THE HALL OF JUSTICE

REPAIR AND REUSE PROJECT - SPECS NO. 6649

211 WEST TEMPLE STREET
LOS ANGELES, CA 90012

COUNTY OF LOS ANGELES

STRUCTURAL RETROFIT - DRAWINGS

FINAL CONSTRUCTION DOCUMENTS

SCOPING DOCUMENTS

100% SUBMISSION

AUGUST 2010

NADEL
Architects Inc.

1990 So. Bundy Dr.
Fourth Floor
Los Angeles, CA 90025

T. 310.826.2100
F. 310.826.0182

www.nadelarc.com

CONSULTANT

COUNTY OF LOS ANGELES
THE HALL OF JUSTICE
STRUCTURAL RETROFIT PHASE

REVISIONS

△	
△	
△	
△	
△	
△	

DRAWING TITLE

COVER SHEET

SCALE :
DATE :
JOB NO :
SHEET NO.

SCOPING DOCUMENTS 100% SUBMISSION AUGUST 2010

ALL DRAWINGS AND WRITTEN MATERIAL APPEARING HEREIN CONSTITUTE THE ORIGINAL AND UNPUBLISHED WORK OF THE ARCHITECT AND THE SAME MAY NOT BE DUPLICATED, USED OR DISCLOSED WITHOUT THE WRITTEN CONSENT OF THE ARCHITECT. COPYRIGHT: NADEL ARCHITECTS INC. ALL RIGHTS RESERVED

ABBREVIATIONS

L	ANGLE	F.A.	FIRE ALARM	P/H	PENTHOUSE
@	AT	F.D.	FLOOR DRAIN	P.L.	PROPERTY LINE
℄	CENTERLINE	F.E.	FIRE EXTINGUISHER	PL.	PLATE
#	NUMBER OR POUNDS	F.E.C.	FIRE EXTINGUISHER CABINET	PLAM.	PLASTIC LAMINATE
Φ	SECURITY OPENING	F.F.	FINISH FLOOR OR FACTORY	PLAS.	PLASTER
A.B.	ANCHOR BOLT		FINISH	PLBG.	PLUMBING
AC.	ACRYLIC (PAINT)	F.H.C.	FIRE HOSE CABINET	PLYWD.	PLYWOOD
A.C.	ASPHALT CONCRETE	FIN.	FINISH	PR.	PAIR
ACOUS.	ACOUSTICAL	FLR.	FLOOR	PT.	PAINT
A.C.U.	AIR CONDITIONING UNIT	FLASH.	FLASHING		
A.D.	AREA DRAIN	FLUOR.	FLUORESCENT		
ADJ.	ADJUSTABLE	F.O.	FACE OF	R.	RISE
A.F.F.	ABOVE FINISH FLOOR	F.O.C.	FACE OF CONCRETE	RAD.	RADIUS
AL.	ALUMINUM	F.O.G.	FACE OF GLASS	R.D.	ROOF DRAIN
ANOD.	ANODIZED	F.O.M.	FACE OF MASONRY	REC.	RECESSED
A.P.	ACCESS PANEL	F.O.S.	FACE OF STUDS	REFR.	REFRIGERATOR
		F.O.W.	FACE OF WALL	REQ.	REQUIRED
B/	BOTTOM OF ...	F.S.	FLOOR SINK	RESIL.	RESILIENT
BD.	BOARD	FTG.	FOOTING	RM.	ROOM
BLDG.	BUILDING	FURR.	FURRING	R.O.	ROUGH OPENING
BLK.	BLOCK	F.W.	FLAT WALL (PAINT)	RWD.	REDWOOD
BLKG.	BLOCKING	GA.	GAGE		
BM.	BEAM	GALV.	GALVANIZED	S & P	SHELF AND POLE
BOT.	BOTTOM	G.D.	GARBAGE DISPOSAL	S.C.	SOLID CORE
BTWN	BETWEEN	GL.	GLASS	SECT.	SECTION
B.U.R.	BUILT-UP ROOFING	GR.	GRADE	S.G.E.	SEMI-GLOSS ENAMEL
		GYP. BD.	GYPSUM BOARD	SHR.	SHOWER
CABT.	CABINET			SHT.	SHEET
C.B.	CATCH BASIN	H.B.	HOSE BIB	SIM.	SIMILAR
CEM.	CEMENT	H.C.	HOLLOW CORE	SIL. POL.	SILICONE POLYESTER
CJ	CONSTRUCTION JOINT	HDBD.	HARDBOARD	S & L.	STAIN AND LACQUER
CT	CERAMIC TILE	HDWD.	HARDWOOD	SPEC.	SPECIFICATION
CLG.	CEILING	H.M.	HOLLOW METAL	SQ.	SQUARE
CLO.	CLOSET	HORIZ.	HORIZONTAL	S.S.	SERVICE SINK
CLR.	CLEAR	HT	HEIGHT	S.STL.	STAINLESS STEEL
CMU	CONCRETE MASONRY UNIT			STD.	STANDARD
C.O.	CONCRETE OPENING			STL.	STEEL
COL.	COLUMN	I.D.	INSIDE DIAMETER	STOR.	STORAGE
CONC.	CONCRETE	INSUL.	INSULATION	STRUCT.	STRUCTURAL
CONT.	CONTINUOUS	INT.	INTERIOR	STR.	STRUCTURE
CORR.	CORRIDOR			SUSP.	SUSPENDED
C.S.P.	COMBINATION STANDPIPE			SYM.	SYMMETRICAL
C.W.	CURTAIN WALL				
		JAN.	JANITOR	T/	TOP OF ...
		JT.	JOINT	T & G	TONGUE AND GROOVE
				T.E.	TRASH ENCLOSURE
DBL.	DOUBLE			TEL.	TELEPHONE
D.F.	DRINKING FOUNTAIN			TEMP.	TEMPERED
DET.	DETAIL			THK.	THICK
DIA.	DIAMETER	LAM.	LAMINATE	T.O.C.	TOP OF CONCRETE
DIM.	DIMENSION	LAV.	LAVATORY	T.O.I.	TOP OF INSULATION
DISP.	DISPENSER	LIN.	LINEN	T.O.P.	TOP OF PARAPET
DN.	DOWN	LVR.	LOUVER	T.O.S.	TOP OF STEEL
DR.	DOOR	LTWT.	LIGHTWEIGHT	T.O.W.	TOP OF WALL
D.T.	DRAINAGE TUBING			T.P.H.	TOILET PAPER HOLDER
DS.	DOWN SPOUT			TV	TELEVISION
D.S.P.	DRY STANDPIPE	MAT	MATERIAL	TYP.	TYPICAL
DWG.	DRAWING	MAX.	MAXIMUM		
		M.C.	MEDICINE CABINET OR MINERAL CORE		
		M.D.O.	MEDIUM DENSITY OVERLAY		
(E)	EXISTING	MECH.	MECHANICAL		
EA.	EACH	MEP	MECHANICAL, ELECTRICAL & PLUMBING	U.N.O.	UNLESS NOTED OTHERWISE
E.D.F.	ELECTRIC DRINKING FOUNTAIN	MET.	METAL	U/S	UNDERSIDE
E.F.S.	EXTERIOR FINISH SYSTEM	MFR.	MANUFACTURER		
EJ	EXPANSION JOINT	MIN.	MINIMUM OR MINUTE		
EL.	ELEVATION	MISC.	MISCELLANEOUS		
ELEC.	ELECTRICAL	M.O.	MASONRY OPENING		
ELEV.	ELEVATOR	MTD.	MOUNTED	V.C.T.	VINYL COMPOSITION TILE
EMER.	EMERGENCY			VERT.	VERTICAL
ENCL.	ENCLOSURE	(N)	NEW	VEST.	VESTIBULE
E.O.S.	EDGE OF SLAB	N.F.	NO FINISH REQUIRED TO BE APPLIED BY CONTRACTOR	V.W.C.	VINYL WALL COVERING
E.P.	ELECTRIC PANEL		IN FIELD		
EQ.	EQUAL	N.I.C.	NOT IN CONTRACT	W	WIDTH
EQPT.	EQUIPMENT	NO.	NUMBER	W/	WITH
E.W.C.	ELECTRIC WATER COOLER	NTS	NOT TO SCALE	W.C.	WATER CLOSET
EXIST.	EXISTING			WD.	WOOD
EXP.	EXPOSED			W.H.	WATER HEATER
EXT.	EXTERIOR			W.O.	WINDOW OPENING
EIFS	EXTERIOR INSULATION & FINISH SYSTEM	O/	OVER	W/O	WITHOUT
		O.C.	ON CENTER	W.P.	WORK POINT
		O.D.	OVERFLOW DRAIN	WP.	WATERPROOF
		O.F.	OIL FINISH	W.S.P.	WET STANDPIPE
		OPNG.	OPENING	W.W.	WINDOW WALL
		OPP.	OPPOSITE/ OPPOSITE HAND		
		OPP.H.	OPPOSITE HAND		
		O.S.	OVERFLOW SCUPPER		

PROJECT DIRECTORY

SHEET INDEX

GENERAL

A0.02 INDEX, PROJECT DIRECTORY, ABBREVIATIONS, LOCATION/VICINITY MAP, SYMBOL LEGEND

ARCHITECTURAL

DEMOLITION DRAWINGS

(D)A2.00 DEMOLITION BASEMENT PLAN
(D)A2.01 DEMOLITION FIRST FLOOR PLAN
(D)A2.02 DEMOLITION SECOND FLOOR PLAN
(D)A2.03 DEMOLITION THIRD FLOOR PLAN
(D)A2.04 DEMOLITION FOURTH FLOOR PLAN
(D)A2.05 DEMOLITION FIFTH FLOOR PLAN
(D)A2.06 DEMOLITION SIXTH FLOOR PLAN
(D)A2.07 DEMOLITION SEVENTH FLOOR PLAN
(D)A2.08 DEMOLITION EIGHTH FLOOR PLAN
(D)A2.09 DEMOLITION NINTH FLOOR PLAN
(D)A2.10 DEMOLITION TENTH FLOOR PLAN
(D)A2.11 DEMOLITION ELEVENTH FLOOR PLAN
(D)A2.12 DEMOLITION TWELFTH FLOOR PLAN
(D)A2.13 DEMOLITION THIRTEENTH FLOOR PLAN
(D)A2.14 DEMOLITION FOURTEENTH FLOOR PLAN
(D)A2.15 DEMOLITION PENTHOUSE FLOOR PLAN
(D)A2.16 DEMOLITION ROOF PLAN

(D)A3.01 EXISTING BUILDING ELEVATION (EAST)
(D)A3.02 EXISTING BUILDING ELEVATION (WEST)
(D)A3.03 EXISTING BUILDING ELEVATION (SOUTH)
(D)A3.04 EXISTING BUILDING ELEVATION (NORTH)
(D)A3.05 EXISTING BUILDING SECTION (1)
(D)A3.06 EXISTING BUILDING SECTION (2)
(D)A3.07 EXISTING BUILDING SECTION (3)
(D)A3.08 EXISTING BUILDING SECTION (4)
(D)A3.09 EXISTING BUILDING SECTION (5)
(D)A3.10 EXISTING BUILDING SECTION (6)
(D)A3.11 EXISTING BUILDING SECTION (7)

NEW REPAIR AND REUSE DRAWINGS

A2.00 BASEMENT FLOOR PLAN
A2.01 FIRST FLOOR PLAN
A2.02 SECOND FLOOR PLAN
A2.03 THIRD FLOOR PLAN
A2.04 FOURTH FLOOR PLAN
A2.05 FIFTH FLOOR PLAN
A2.06 SIXTH FLOOR PLAN
A2.07 SEVENTH FLOOR PLAN
A2.08 EIGHTH FLOOR PLAN
A2.09 NINTH FLOOR PLAN
A2.10 TENTH FLOOR PLAN
A2.11 (NOT USED)
A2.12 TWELFTH FLOOR PLAN
A2.13 (NOT USED)
A2.14 FOURTEENTH FLOOR PLAN
A2.15 PENTHOUSE FLOOR PLAN
A2.16 ELEV. MACHINE ROOM PLAN
A2.17 ELEV. MACHINE ROOM PLAN & MACHINE RM. ROOF PLAN

A3.01 BUILDING ELEVATION (EAST)
A3.02 BUILDING ELEVATION (WEST)
A3.03 BUILDING ELEVATION (SOUTH)
A3.04 BUILDING ELEVATION (NORTH)
A3.05 BUILDING SECTION (1)
A3.06 BUILDING SECTION (2)
A3.07 BUILDING SECTION (3)
A3.08 BUILDING SECTION (4)
A3.09 BUILDING SECTION (5)
A3.10 BUILDING SECTION (6)
A3.11 BUILDING SECTION (7)

A5.01 ENLARGED STAIR A PLANS
A5.02 ENLARGED STAIR A, 1 & S. PLANS, SECTIONS & DETAILS
A5.03 ENLARGED STAIR B PLANS
A5.04 ENLARGED STAIR B PLANS, SECTIONS & DETAILS
A5.05 STAIR SECTION - STAIR A
A5.06 STAIR SECTION - STAIR B AND STAIR #5
A5.07 PENTHOUSE STAIR PLANS, SECTIONS AND DETAILS
A5.08 DETAILS
A5.09 DETAILS

A6.01 ENLARGED PLANS - SHEARWALLS - 1ST, 3RD, 4TH, 5TH FLOORS
A6.02 ENLARGED PLANS - SHEARWALLS - 6TH, 7TH, 9TH, 10TH FLOORS
A6.03 ENLARGED PLANS - SHEARWALLS - 11TH, 12TH, 13TH, 14TH FLOORS
A6.04 ENLARGED PLAN - SHEARWALLS - 8TH FLOOR
A7.03 TYPICAL ROOFING DETAILS
A7.04 DETAILS
A7.05 PARTIAL RAMP SECTIONS AND DETAILS
A8.01 DOOR SCHEDULE, TYPES, AND DETAILS
A8.03 WALL TYPES AND DETAILS

HISTORIC DRAWINGS

EXTERIOR REHABILITATION DRAWINGS

HA3.01 EAST ELEVATION - SPRING STREET
HA3.02 WEST ELEVATION - BROADWAY
HA3.03 SOUTH ELEVATION - TEMPLE STREET
HA3.04 NORTH ELEVATION - ALISO STREET
HA3.05 LIGHT COURT 1 NORTH & EAST ELEVATION
HA3.06 LIGHT COURT 1 SOUTH & WEST ELEVATION
HA3.07 LIGHT COURT 1 MISCELLANEOUS ELEVATION
HA3.08 LIGHT COURT 2 NORTH & EAST ELEVATION
HA3.09 LIGHT COURT 2 SOUTH & WEST ELEVATION

CONSTRUCTION DETAILS

HA6.01 EXTERIOR WALL SECTIONS
HA6.02 EXTERIOR WALL SECTIONS
HA6.03 STONE REHABILITATION AND ANCHOR DETAILS
HA6.04 STONE REHABILITATION AND ANCHOR DETAILS
HA6.05 LIGHT COURT REHABILITATION AND ANCHOR DETAILS
HA6.06 LIGHT COURT REHABILITATION AND ANCHOR DETAILS
HA6.07 BALLUSTRADE ANCHOR DETAILS
HA6.08 TERRA COTTA CORNICE ANCHOR DETAILS
HA7.01 WINDOW SCHEDULE
HA7.02 WINDOW SCHEDULE
HA7.03 WINDOW SCHEDULE
HA7.04 WINDOW SCHEDULE
HA7.05 EXTERIOR ELEVATION WINDOW DETAILS
HA7.06 EXTERIOR ELEVATION WINDOW DETAILS
HA7.07 LIGHT COURT WINDOW DETAILS
HA7.08 LIGHT COURT BRONZE WINDOW & WINDOW FABRICATION DETAILS
HA7.09 TYPICAL ENTRANCE FRAME ELEVATIONS AND DETAILS
HA7.10 ENLARGED ENTRANCE FRAME ELEVATIONS AND DETAILS
HA7.11 DOOR SCHEDULE
HA7.12 WINDOW WATERPROOFING & SEALANT DETAILS
HA7.13 WINDOW WATERPROOFING & SEALANT DETAILS
HA9.01 KEY PLAN

STRUCTURAL

S1.00 GENERAL NOTES AND SHEET LIST
S1.00A GENERAL NOTES

DEMOLITION DRAWINGS

(D)S2.00 DEMOLITION FOUNDATION PLAN
(D)S2.01 DEMOLITION FIRST FLOOR PLAN
(D)S2.02 DEMOLITION SECOND FLOOR PLAN
(D)S2.03 DEMOLITION THIRD FLOORG PLAN
(D)S2.04 DEMOLITION FOURTH FLOOR PLAN
(D)S2.05 DEMOLITION FIFTH FLOOR PLAN
(D)S2.06 DEMOLITION SIXTH FLOOR PLAN
(D)S2.07 DEMOLITION SEVENTH FLOOR PLAN
(D)S2.08 DEMOLITION EIGHTH FLOOR PLAN
(D)S2.09 DEMOLITION NINTH FLOOR PLAN
(D)S2.10 DEMOLITION TENTH FLOOR PLAN
(D)S2.11 DEMOLITION ELEVENTH FLOOR PLAN
(D)S2.12 DEMOLITION TWELFTH FLOOR PLAN
(D)S2.13 DEMOLITION THIRTEENTH FLOOR PLAN
(D)S2.14 DEMOLITION FOURTEENTH FLOOR PLAN
(D)S2.15 DEMOLITION PENTHOUSE FLOOR PLAN
(D)S2.16 DEMOLITION ROOF PLAN

NEW REPAIR AND REUSE DRAWINGS

S1.01 TYPICAL DETAILS
S1.02 TYPICAL DETAILS
S1.03 TYPICAL DETAILS
S2.00 FOUNDATION FLOOR PLAN
S2.01 FIRST FLOOR PLAN
S2.02 SECOND FLOOR PLAN
S2.03 THIRD FLOOR PLAN
S2.04 FOURTH FLOOR PLAN
S2.05 FIFTH FLOOR PLAN
S2.06 SIXTH FLOOR PLAN
S2.07 SEVENTH FLOOR PLAN
S2.08 EIGHTH FLOOR PLAN
S2.09 NINTH FLOOR PLAN
S2.10 TENTH FLOOR PLAN

STRUCTURAL CONT.

NEW REPAIR AND REUSE DRAWINGS CONT.

S2.11 ELEVENTH FLOOR PLAN
S2.12 TWELFTH FLOOR PLAN
S2.13 THIRTEENTH FLOOR PLAN
S2.14 FOURTEENTH FLOOR PLAN
S2.15 PENTHOUSE FLOOR PLAN
S2.16 ELEV. MACHINE ROOM FRAMING PLANS AND ELEVATIONS
S2.17 ENLARGED STAIR FRAMING PLANS AND ELEVATIONS
S2.18 ENLARGED STAIR FRAMING PLANS
S3.01 INTERIOR EAST WALL ELEV.
S3.02 INTERIOR WEST WALL ELEV.
S3.03 INTERIOR SOUTH WALL ELEV.
S3.04 INTERIOR NORTH WALL ELEV.
S3.05 DRAG BEAM ELEVS.
S4.00 SECTIONS AND DETAILS
S4.01 SECTIONS AND DETAILS
S4.02 SECTIONS AND DETAILS
S4.03 SECTIONS AND DETAILS
S4.04 SECTIONS AND DETAILS
S4.11 SECTIONS AND DETAILS
S4.12 SECTIONS AND DETAILS
S4.13 SECTIONS AND DETAILS

MECHANICAL / PLUMBING

NEW REPAIR AND REUSE DRAWINGS

MP0.01 MECHANICAL LEGEND, ABBREVIATIONS, SCHEDULES, DRAWING LIST
MP0.02 PLUMBING LEGEND, NOTES, ABBREVIATIONS, SCHEDULES, DRAWING LIST
MP1.00 PLUMBING SITE PLAN
MP2.00 BASEMENT FLOOR PLAN
MP2.01 FIRST FLOOR PLAN
MP2.02 SECOND FLOOR PLAN
MP2.03 THIRD FLOOR PLAN
MP2.04 FOURTH FLOOR PLAN
MP2.05 FIFTH FLOOR PLAN
MP2.06 SIXTH FLOOR PLAN
MP2.07 SEVENTH FLOOR PLAN
MP2.08 EIGHTH FLOOR PLAN
MP2.09 NINTH FLOOR PLAN
MP2.10 TENTH FLOOR PLAN
MP2.12 TWELFTH FLOOR PLAN
MP2.14 FOURTEENTH FLOOR PLAN
MP2.15 PENTHOUSE FLOOR PLAN
MP2.16 ELEVATOR MACHINE ROOM PLAN
MP2.17 ELEVATOR MACHINE ROOM ROOF PLAN
MP3.00 MECHANICAL RISER DIAGRAM
MP3.01 PLUMBING RISER DIAGRAM - STORM DRAIN
MP3.02 PLUMBING RISER DIAGRAM - FIRE PROTECTION
MP4.00 MECHANICAL DETAILS
MP4.01 PLUMBING DETAILS

ELECTRICAL

NEW REPAIR AND REUSE DRAWINGS

E0.01 SYMBOL LIST, GENERAL NOTES
E2.00 BASEMENT FLOOR PLAN
E2.01 FIRST FLOOR PLAN
E2.02 SECOND FLOOR PLAN
E2.03 THIRD FLOOR PLAN
E2.04 FOURTH FLOOR PLAN
E2.05 FIFTH FLOOR PLAN
E2.06 SIXTH FLOOR PLAN
E2.07 SEVENTH FLOOR PLAN
E2.08 EIGHTH FLOOR PLAN
E2.09 NINTH FLOOR PLAN
E2.10 TENTH FLOOR PLAN
E2.12 TWELFTH FLOOR PLAN
E2.14 FOURTEENTH FLOOR PLAN
E2.15 PENTHOUSE FLOOR PLAN
E2.16 ELEVATOR MACHINE ROOM PLAN
E2.17 ELEVATOR MACHINE ROOM ROOF PLAN
E4.00 EXISTING SINGLE LINE DIAGRAM
TEMPORARY POWER

SYMBOL LEGEND

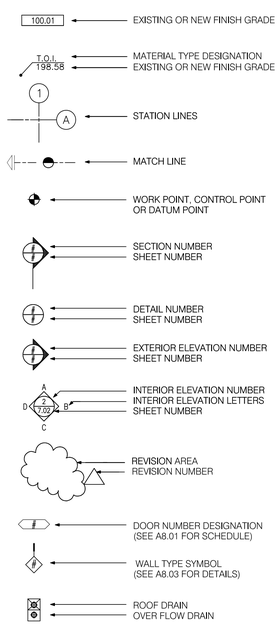

APPLICABLE CODE

The design of the Structural Retrofit Drawings and Specifications is based on the 2002 Los Angeles County Building Code. Design Builder to update drawings to comply with 2010 California Building Code and 2011 Los Angeles County Building Code. And ALL other current applicable Codes.

BUILDING DATA

EXISTING OFFICE BUILDING

CONSTRUCTION TYPE: TYPE I, FIRE-RESISTIVE, NON-COMBUSTIBLE

FIRE/LIFE SAFETY SYSTEMS:
1. STANDPIPE SYSTEM
2. STAIR PRESSURIZATION SYSTEM

OCCUPANCY CLASSIFICATION: GROUP B

GROSS FLOOR AREA: ±465,779 SQ. FT.

HEIGHT: 12 STORIES & BASEMENT FOR OFFICES

ALLOWABLE AREA: UNLIMITED

APPROVALS

County of Los Angeles, Chief Administrative Office

County of Los Angeles, Fire Department

County of Los Angeles, Department of Building and Safety

LOCATION / VICINITY MAP

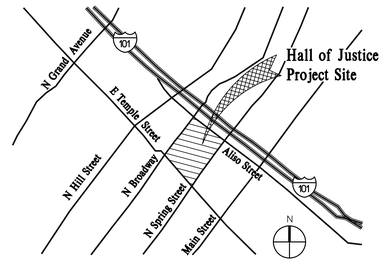

NADEL
Architects Inc.

1990 So. Bundy Dr.
Fourth Floor
Los Angeles, CA 90025

T. 310.826.2100
F. 310.826.0182

www.nadelarc.com

CONSULTANT

COUNTY OF LOS ANGELES
THE HALL OF JUSTICE
STRUCTURAL RETROFIT PHASE

REVISIONS

1	
2	
3	
4	
5	
6	

DRAWING TITLE

INDEX, PROJECT DIRECTORY SYMBOL LEGEND, VICINITY MAP & ABBREVIATIONS

SCOPING DOCUMENTS 100% SUBMISSION AUGUST 2010

SCALE :
DATE :
JOB NO :
SHEET NO.

A0.02

ALL DRAWINGS AND WRITTEN MATERIAL APPEARING HEREIN CONSTITUTE THE ORIGINAL AND UNPUBLISHED WORK OF THE ARCHITECT AND THE SAME MAY NOT BE DUPLICATED, USED OR DISCLOSED WITHOUT THE WRITTEN CONSENT OF THE ARCHITECT. COPYRIGHT - NADEL ARCHITECTS INC. - ALL RIGHTS RESERVED

ALL DRAWINGS AND MATTER MATERIAL APPEARING HEREIN CONSTITUTE THE ORIGINAL AND UNPUBLISHED WORK OF THE ARCHITECT AND THE SAME MAY NOT BE DUPLICATED, USED OR DISCLOSED WITHOUT THE WRITTEN CONSENT OF THE ARCHITECT. COPYRIGHT: NADEL ARCHITECTS INC. ALL RIGHTS RESERVED.

DEMOLITION BASEMENT FLOOR PLAN

SCALE: 1/8"=1'-0" 1

N 0' 2' 4' 8' 16'

BUILDING LINE

(E) ELECTRICAL PULLBOX

RELOCATE (E) ELECTRICAL EQUIPMENT AND LINES AS REQUIRED FOR INSTALLATION OF NEW CONSTRUCTION. TYP.

(E) OIL SWITCH BREAKER

(E) ELECTRICAL SUBSTATION.

(E) ELECTRICAL PULLBOX

STAIR #1

HISTORIC MATERIAL STORAGE AREA (DO NOT DISTURB).

(GLAZED BRICK)

HISTORIC MATERIAL STORAGE AREA

CONCRETE STAIRS TO BE DEMOLISHED

(E) CONCRETE & MASONRY PADS TO BE DEMOLISHED. TYP.

PORTION OF EXIST. CONC. SLAB TO BE DEMOLISHED AND REMOVED AND AREA EXCAVATED FOR NEW EXPANDED CONC. FOOTING. TYP., SEE STRUCTURAL

PORTION OF EXIST. CONC. SLAB TO BE DEMOLISHED AND REMOVED AND AREA EXCAVATED FOR NEW EXPANDED CONC. FOOTING. TYP., SEE STRUCTURAL

(E) OIL SWITCH BREAKER

(E) ELECTRICAL PULLBOX

DEMO CONC PADS. TYP.

(E) OIL SWITCH BREAKER

(E) ELECTRICAL PULLBOX

RELOCATE (E) ELECTRICAL EQUIPMENT AND LINES AS REQUIRED FOR INSTALLATION OF NEW CONSTRUCTION. TYP.

(E) ELECTRICAL SUBSTATION

UTILITY DOOR

CONC. WALLS TO BE DEMOLISHED. TYP.

DEMO BASED CONC PAD

CONCRETE RAMP & WALLS TO BE DEMOLISHED

RAMP UP TO 1ST FLR TO BE DEMOLISHED

(E) FOOTING TO REMAIN.

(E) OIL SWITCH BREAKER

DEMO CONC PAD, TYPICAL

CONC. WALLS TO BE DEMOLISHED. TYP.

CONCRETE PAD TO BE DEMOLISHED. TYP.

CONC. WALLS TO BE DEMOLISHED. TYP.

EXISTING ELEVATOR PITS

4'-8"

DEMOLITION NOTES / WALL MATERIALS LEGEND

1. VERIFY ALL EXISTING MATERIALS, DIMENSIONS, FLOOR ELEVATIONS, AND BUILDING CONDITIONS.
2. ALL STAIRS TO REMAIN EXCEPT AS INDICATED DASHED.
3. PROVIDE NEW OPENINGS IN EXISTING SLABS.
4. NOTES & SYMBOLS INDICATED APPLY TO THE GENERAL PROJECT. ALL NOTES DO NOT NECESSARILY APPLY TO ALL INDIVIDUAL SHEETS.
5. PROVIDE BARRIER IN ACCORDANCE WITH OSHA STANDARDS AT GRADE CHANGES & SLAB OPENINGS.
6. LEVEL CONCRETE SLAB FOR APPLICATION OF NEW ROOF IN ACCORDANCE WITH MANUFACTURER'S RECOMMENDATIONS.
7. REMOVE ALL MORTAR, METAL TIES, WOOD AND OTHER MATERIALS THAT PROJECTS BEYOND THE FACE OF THE URM AT HISTORIC STAIR AND LIGHTCOURT URM WALLS. SURFACE OF URM SHALL BE SMOOTH FOR INSTALLATION OF FIBER WRAP AND/OR STRONG BACKS.

- EXISTING STONE / TERRA-COTTA / MASONRY WITH OR WITHOUT STONE BASE TO REMAIN
- EXISTING CONCRETE WALL / COLUMN TO REMAIN
- EXISTING HOLLOW CLAY TILE PARTITION WITH STONE SURFACE TO REMAIN
- CONCRETE BLOCK WALL TO REMAIN
- PLASTER WITH OR WITHOUT MARBLE BASE AND/OR CERAMIC TILE ON HOLLOW CLAY TILE (HCT) FURRING OR PARTITION TO REMAIN.
- HOLLOW CLAY TILE PARTITION WITH PLASTER AND STONE BASE TO REMAIN
- HOLLOW CLAY TILE / UNREINFORCED MASONRY WITH NO FINISH TO REMAIN
- PLASTER / GYPSUM BOARD ON METAL STUD PARTITION OR FURRING TO REMAIN
- EXISTING OPENING IN FLOOR SLAB MAINTAIN BARRIER PER OSHA STANDARDS.
- CONCRETE WALL / TO BE DEMOLISHED
- CONCRETE BLOCK WALL TO BE DEMOLISHED
- PROVIDE NEW OPENING IN EXISTING FLOOR SLAB – PROVIDE BARRIER IN ACCORDANCE WITH OSHA STANDARDS
- RAISED FLOOR / CONCRETE PAD TO BE DEMOLISHED TO MATCH EXISTING SURROUNDING FLOOR ELEVATION. PATCH AND REPAIR FLOOR AS REQUIRED
- REMOVE PLYWOOD BOARDS FROM WINDOWS FOR INSTALLATION OF NEW WINDOW AND REHABILITATION OF EXISTING WINDOWS WHICH ARE TO REMAIN.
- DETERIORATED SLAB TO BE REMOVED AND REPLACED IN KIND. COLUMNS AND BEAMS TO REMAIN INTACT

NADEL Architects Inc.
1990 So. Bundy Dr.
Fourth Floor
Los Angeles, CA 90025
T. 310.826.2100
F. 310.826.0182
www.nadelarc.com

CONSULTANT

REVISIONS

DRAWING TITLE

SCOPING DOCUMENTS 100% SUBMISSION AUGUST 2010

COUNTY OF LOS ANGELES
THE HALL OF JUSTICE
STRUCTURAL RETROFIT PHASE

DEMOLITION
BASEMENT FLOOR PLAN

SCALE : 1/8"=1'-0"
DATE :
JOB NO :
SHEET NO.

D(A2.00

DEMOLITION NOTES / WALL MATERIALS LEGEND

1. VERIFY ALL EXISTING MATERIALS, DIMENSIONS, FLOOR ELEVATIONS, AND BUILDING CONDITIONS.
2. ALL STAIRS TO REMAIN EXCEPT AS INDICATED DASHED.
3. PROVIDE NEW OPENINGS IN EXISTING SLABS.
4. NOTES & SYMBOLS INDICATED APPLY TO THE GENERAL PROJECT. ALL NOTES DO NOT NECESSARILY APPLY TO ALL INDIVIDUAL SHEETS.
5. PROVIDE BARRIER IN ACCORDANCE WITH OSHA STANDARDS AT GRADE CHANGES & SLAB OPENINGS.
6. LEVEL CONCRETE SLAB FOR APPLICATION OF NEW ROOF IN ACCORDANCE WITH MANUFACTURE'S RECOMMENDATIONS.
7. REMOVE ALL MORTAR, METAL TIES, WOOD AND OTHER MATERIALS THAT PROJECTS BEYOND THE FACE OF THE URM AT HISTORIC STAIR AND LIGHTCOURT URM WALLS. SURFACE OF URM SHALL BE SMOOTH FOR INSTALLATION OF FIBER WRAP AND/OR STRONG BACKS.

- EXISTING STONE / TERRA-COTTA / MASONRY WITH OR WITHOUT STONE BASE TO REMAIN
- EXISTING CONCRETE WALL / COLUMN TO REMAIN
- EXISTING HOLLOW CLAY TILE PARTITION WITH STONE SURFACE TO REMAIN
- CONCRETE BLOCK WALL TO REMAIN
- PLASTER WITH OR WITHOUT MARBLE BASE AND/OR CERAMIC TILE ON HOLLOW CLAY TILE (HCT) FURRING OR PARTITION TO REMAIN.
- HOLLOW CLAY TILE PARTITION WITH PLASTER AND STONE BASE TO REMAIN
- HOLLOW CLAY TILE / UNREINFORCED MASONRY WITH NO FINISH TO REMAIN
- PLASTER / GYPSUM BOARD ON METAL STUD PARTITION OR FURRING TO REMAIN
- EXISTING OPENING IN FLOOR SLAB MAINTAIN BARRIER PER OSHA STANDARDS.
- CONCRETE WALL / TO BE DEMOLISHED
- CONCRETE BLOCK WALL TO BE DEMOLISHED
- PROVIDE NEW OPENING IN EXISTING FLOOR SLAB – PROVIDE BARRIER IN ACCORDANCE WITH OSHA STANDARDS
- RAISED FLOOR / CONCRETE PAD TO BE DEMOLISHED TO MATCH EXISTING SURROUNDING FLOOR ELEVATION. PATCH AND REPAIR FLOOR AS REQUIRED
- REMOVE PLYWOOD BOARDS FROM WINDOWS FOR INSTALLATION OF NEW WINDOW AND REHABILITATION OF EXISTING WINDOWS WHICH ARE TO REMAIN.
- DETERIORATED SLAB TO BE REMOVED AND REPLACED IN KIND. COLUMNS AND BEAMS TO REMAIN INTACT

NADEL Architects Inc.

1990 So. Bundy Dr.
Fourth Floor
Los Angeles, CA 90025

T. 310.826.2100
F. 310.826.0182

www.nadelarc.com

CONSULTANT

COUNTY OF LOS ANGELES

THE HALL OF JUSTICE

STRUCTURAL RETROFIT PHASE

REVISIONS

DRAWING TITLE

DEMOLITION FIRST FLOOR PLAN

SCALE : 1/8"=1'-0"
DATE :
JOB NO :
SHEET NO.

(D)A2.01

SCOPING DOCUMENTS 100% SUBMISSION AUGUST 2010

DEMOLITION FIRST FLOOR PLAN — SCALE: 1/8"=1'-0" — 1

ALL DRAWINGS AND WRITTEN MATERIAL APPEARING HEREIN CONSTITUTE THE ORIGINAL AND UNPUBLISHED WORK OF THE ARCHITECT AND THE SAME MAY NOT BE DUPLICATED, USED OR DISCLOSED WITHOUT THE WRITTEN CONSENT OF THE ARCHITECT. COPYRIGHT: NADEL ARCHITECTS INC. ALL RIGHTS RESERVED.

ALL DRAWINGS AND WRITTEN MATERIAL APPEARING HEREIN CONSTITUTE THE ORIGINAL AND UNPUBLISHED WORK OF THE ARCHITECT AND THE SAME MAY NOT BE DUPLICATED, USED OR DISCLOSED WITHOUT THE WRITTEN CONSENT OF THE ARCHITECT. COPYRIGHT: NADEL ARCHITECTS INC. ALL RIGHTS RESERVED.

DEMOLITION SECOND FLOOR PLAN

SCALE: 1/8"=1'-0"

1

N

0' 2' 8' 4' 8' 16'

BUILDING LINE

UPPER PART OF LOGGIA

BRIDGE

DEMOLISH CONC. WALL

HISTORIC STAIR #1

HISTORIC STAIR #2

HISTORIC STAIR #3

PIPE SHAFT

OPEN SHAFT

STAIRWAY B

TEMPORARY WOOD STAIR

STAIRWAY A

LIGHT COURT

ELEVATOR CORRIDOR

EXISTING FLOOR PROTECTION COVERING TO REMAIN (DO NOT DAMAGE)

FLOOR PROTECTION

DEMOLISH RAISED SLAB AREA

EXISTING SLOPED FLOOR

HISTORIC DOORS TO REMAIN. PROTECT IN PLACE

(E) STEEL BEAMS, TYP.

(E) CONC. ENCASED STEEL BEAMS, TYP.

(E) CONC. WALL, TYP.

ROOF

DEMOLISH EXISTING ROOF SLAB AND BEAMS, SALVAGE ALL WALL BRICK. BRICK COVERS & TERRA COTTA COPING, FOR RE-INSTALLATION

PROVIDE BARRIER IN ACCORDANCE WITH OSHA STANDARDS AT OPENINGS IN FLOOR SLAB (TYP.)

HISTORIC STAIR #3

DEMOLISH (E) BEAM

DEMOLISH (E) WALL

DEMOLISH (E) DOOR

DEMOLISH (E) WINDOW

DEMOLISH (E) STAIR

DEMOLISH (E) RAILING

DEMOLISH (E) CEILING

DEMOLISH (E) FLOOR

DEMOLISH (E) ROOF

DEMOLISH (E) SKYLIGHT

DEMOLISH (E) CHIMNEY

DEMOLISH (E) ELEVATOR

DEMOLISH (E) ESCALATOR

DEMOLISH (E) STAIRWAY

DEMOLISH (E) RAMP

DEMOLISH (E) PLUMBING

DEMOLISH (E) HVAC

DEMOLISH (E) ELECTRICAL

DEMOLISH (E) FIRE SPRINKLER

DEMOLISH (E) FIRE ALARM

DEMOLISH (E) SECURITY

DEMOLISH (E) TELEPHONE

DEMOLISH (E) DATA

DEMOLISH (E) AUDIO VISUAL

DEMOLISH (E) INTERCOM

DEMOLISH (E) CLOCK

DEMOLISH (E) SPEAKER

DEMOLISH (E) CAMERA

DEMOLISH (E) LIGHTING

DEMOLISH (E) FIXTURE

DEMOLISH (E) FURNITURE

DEMOLISH (E) EQUIPMENT

DEMOLISH (E) MISCELLANEOUS

DEMOLISH (E) ITEM

DEMOLISH (E) ITEM

DEMOLISH (E) ITEM

ALL DRAWINGS AND WRITTEN MATERIAL APPEARING HEREIN CONSTITUTE THE ORIGINAL AND UNPUBLISHED WORK OF THE ARCHITECT AND THE SAME MAY NOT BE DUPLICATED, USED OR DISCLOSED WITHOUT THE WRITTEN CONSENT OF THE ARCHITECT. COPYRIGHT: NADEL ARCHITECTS INC. ALL RIGHTS RESERVED.

DEMOLITION THIRD FLOOR PLAN

SCALE: 1/8"=1'-0"

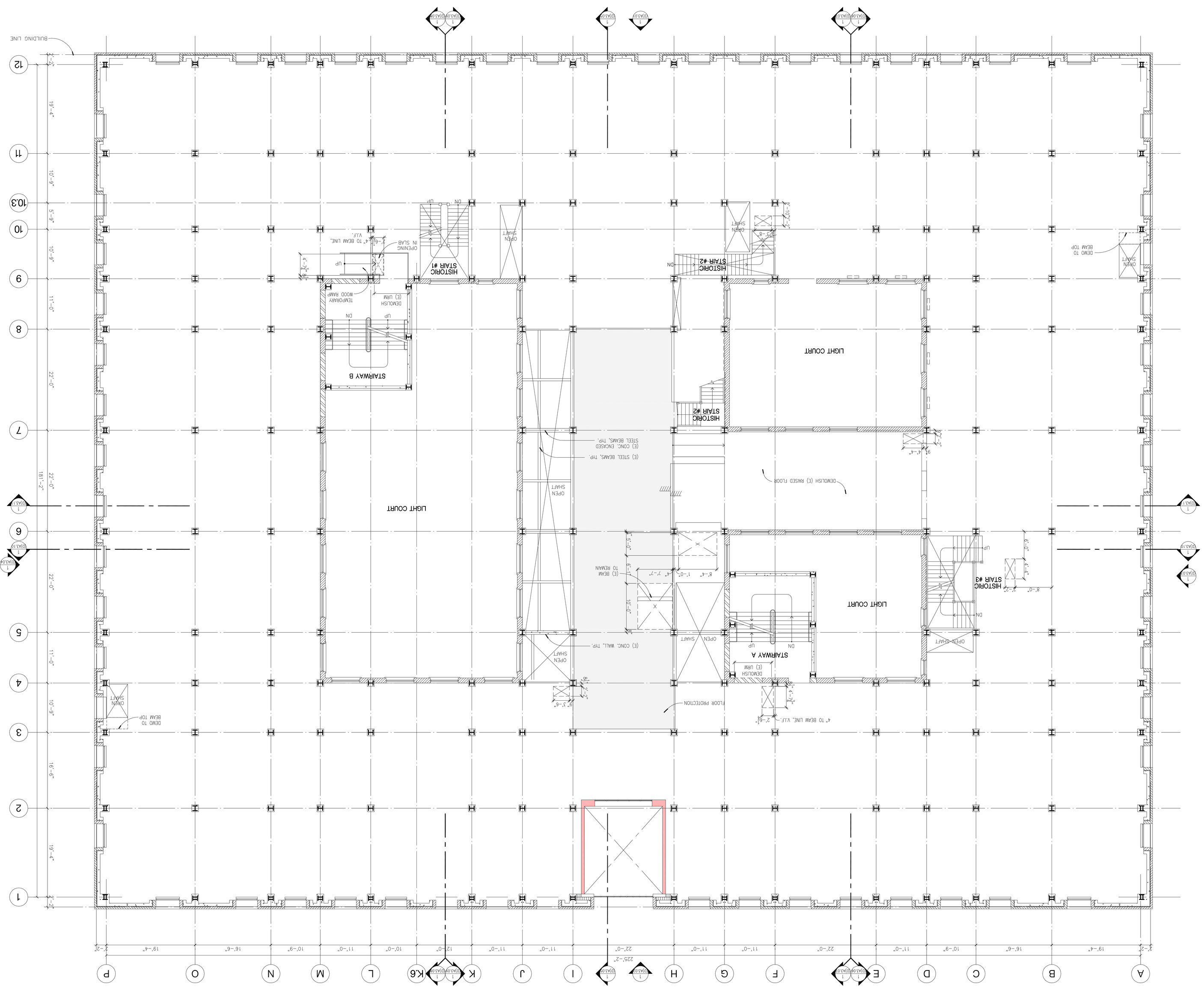

DEMOLITION NOTES / WALL MATERIALS LEGEND

1. VERIFY ALL EXISTING MATERIALS, DIMENSIONS, FLOOR ELEVATIONS, AND BUILDING CONDITIONS.
2. ALL STAIRS TO REMAIN EXCEPT AS INDICATED DASHED.
3. PROVIDE NEW OPENINGS IN EXISTING SLABS.
4. NOTES & SYMBOLS INDICATED APPLY TO THE GENERAL PROJECT. ALL NOTES DO NOT NECESSARILY APPLY TO ALL INDIVIDUAL SHEETS.
5. PROVIDE BARRIER IN ACCORDANCE WITH OSHA STANDARDS AT GRADE CHANGES & SLAB OPENINGS.
6. LEVEL CONCRETE SLAB FOR APPLICATION OF NEW ROOF IN ACCORDANCE WITH MANUFACTURE'S RECOMMENDATIONS.
7. REMOVE ALL MORTAR, METAL TIES, WOOD AND OTHER MATERIALS THAT PROJECTS BEYOND THE FACE OF THE URM AT HISTORIC STAIR AND LIGHTCOURT URM WALLS. SURFACE OF URM SHALL BE SMOOTH FOR INSTALLATION OF FIBER WRAP AND/OR STRONG BACKS.

EXISTING STONE / TERRA-COTTA / MASONRY WITH OR WITHOUT STONE BASE TO REMAIN

EXISTING CONCRETE WALL / COLUMN TO REMAIN

EXISTING HOLLOW CLAY TILE PARTITION WITH STONE SURFACE TO REMAIN

CONCRETE BLOCK WALL TO REMAIN

PLASTER WITH OR WITHOUT MARBLE BASE AND/OR CERAMIC TILE ON HOLLOW CLAY TILE (HCT) FURRING OR PARTITION TO REMAIN.

HOLLOW CLAY TILE PARTITION WITH PLASTER AND STONE BASE TO REMAIN

HOLLOW CLAY TILE / UNREINFORCED MASONRY WITH NO FINISH TO REMAIN

PLASTER / GYPSUM BOARD ON METAL STUD PARTITION OR FURRING TO REMAIN

EXISTING OPENING IN FLOOR SLAB MAINTAIN BARRIER PER OSHA STANDARDS.

CONCRETE WALL / TO BE DEMOLISHED

CONCRETE BLOCK WALL TO BE DEMOLISHED

PROVIDE NEW OPENING IN EXISTING FLOOR SLAB – PROVIDE BARRIER IN ACCORDANCE WITH OSHA STANDARDS

RAISED FLOOR / CONCRETE PAD TO BE DEMOLISHED TO MATCH EXISTING SURROUNDING FLOOR ELEVATION. PATCH AND REPAIR FLOOR AS REQUIRED

REMOVE PLYWOOD BOARDS FROM WINDOWS FOR INSTALLATION OF NEW WINDOW AND REHABILITATION OF EXISTING WINDOWS WHICH ARE TO REMAIN.

DETERIORATED SLAB TO BE REMOVED AND REPLACED IN KIND. COLUMNS AND BEAMS TO REMAIN INTACT

NADEL Architects Inc.
1990 So. Bundy Dr.
Fourth Floor
Los Angeles, CA 90025
T. 310.826.2100
F. 310.826.0182
www.nadelarc.com

CONSULTANT

REVISIONS

DRAWING TITLE

COUNTY OF LOS ANGELES
THE HALL OF JUSTICE
STRUCTURAL RETROFIT PHASE

SCOPING DOCUMENTS 100% SUBMISSION AUGUST 2010

DEMOLITION THIRD FLOOR PLAN

SCALE: 1/8"=1'-0"

DATE :

JOB NO :

SHEET NO.

(D)A2.03

DEMOLITION NOTES / WALL MATERIALS LEGEND

1. VERIFY ALL EXISTING MATERIALS, DIMENSIONS, FLOOR ELEVATIONS, AND BUILDING CONDITIONS.
2. ALL STAIRS TO REMAIN EXCEPT AS INDICATED DASHED.
3. PROVIDE NEW OPENINGS IN EXISTING SLABS.
4. NOTES & SYMBOLS INDICATED APPLY TO THE GENERAL PROJECT. ALL NOTES DO NOT NECESSARILY APPLY TO ALL INDIVIDUAL SHEETS.
5. PROVIDE BARRIER IN ACCORDANCE WITH OSHA STANDARDS AT GRADE CHANGES & SLAB OPENINGS.
6. LEVEL CONCRETE SLAB FOR APPLICATION OF NEW ROOF IN ACCORDANCE WITH MANUFACTURE'S RECOMMENDATIONS.
7. REMOVE ALL MORTAR, METAL TIES, WOOD AND OTHER MATERIALS THAT PROJECTS BEYOND THE FACE OF THE URM AT HISTORIC STAIR AND LIGHTCOURT URM WALLS. SURFACE OF URM SHALL BE SMOOTH FOR INSTALLATION OF FIBER WRAP AND/OR STRONG BACKS.

- EXISTING STONE / TERRA-COTTA / MASONRY WITH OR WITHOUT STONE BASE TO REMAIN
- EXISTING CONCRETE WALL / COLUMN TO REMAIN
- EXISTING HOLLOW CLAY TILE PARTITION WITH STONE SURFACE TO REMAIN
- CONCRETE BLOCK WALL TO REMAIN
- PLASTER WITH OR WITHOUT MARBLE BASE AND/OR CERAMIC TILE ON HOLLOW CLAY TILE (HCT) FURRING OR PARTITION TO REMAIN.
- HOLLOW CLAY TILE PARTITION WITH PLASTER AND STONE BASE TO REMAIN
- HOLLOW CLAY TILE / UNREINFORCED MASONRY WITH NO FINISH TO REMAIN
- PLASTER / GYPSUM BOARD ON METAL STUD PARTITION OR FURRING TO REMAIN
- EXISTING OPENING IN FLOOR SLAB MAINTAIN BARRIER PER OSHA STANDARDS.
- CONCRETE WALL / TO BE DEMOLISHED
- CONCRETE BLOCK WALL TO BE DEMOLISHED
- PROVIDE NEW OPENING IN EXISTING FLOOR SLAB - PROVIDE BARRIER IN ACCORDANCE WITH OSHA STANDARDS
- RAISED FLOOR / CONCRETE PAD TO BE DEMOLISHED TO MATCH EXISTING SURROUNDING FLOOR ELEVATION. PATCH AND REPAIR FLOOR AS REQUIRED
- REMOVE PLYWOOD BOARDS FROM WINDOWS FOR INSTALLATION OF NEW WINDOW AND REHABILITATION OF EXISTING WINDOWS WHICH ARE TO REMAIN.
- DETERIORATED SLAB TO BE REMOVED AND REPLACED IN KIND. COLUMNS AND BEAMS TO REMAIN INTACT

DEMO ROUGH TOPPING SLAB DOWN TO FLOOR LEVEL
+1/2"
DEMO ROUGH TOPPING SLAB DOWN TO FLOOR LEVEL
+1/2"
HISTORIC STAIR #3
OPEN SHAFT
DN
UP
LIGHT COURT
STAIRWAY A
DN
UP
9'-6"
FLOOR PROTECTION
OPEN SHAFT
OPEN SHAFT
OPEN SHAFT
OPEN SHAFT
NEW ROOF
LIGHT COURT
HISTORI STAIR #
STAIRWAY B
UP
DN
UP
TEMPORARY WOOD RAMP
HISTORIC STAIR #1
DN
UP
OPENING IN SLAB
8'-6"
OPEN SHAFT
OPEN SHAFT
OPEN SHAFT
OPEN SHAFT
BUILDING LINE

A B C D E F G H I J K K.6 L M N O P
2'-2" 19'-4" 16'-6" 10'-9" 11'-0" 22'-0" 11'-0" 11'-0" 22'-0" 11'-0" 11'-0" 12'-0" 10'-0" 11'-0" 10'-9" 16'-6" 19'-4" 2'-2"
225'-2"
1 2 3 4 5 6 7 8 9 10 10.3 11 12
2'-2" 19'-4" 16'-6" 10'-9" 11'-0" 22'-0" 22'-0" 18'-2" 22'-0" 11'-0" 10'-9" 5'-9" 10'-9" 19'-4" 2'-2"

4' 8'
0' 2' 6' 16'
N

DEMOLITION FOURTH FLOOR PLAN | SCALE: 1/8"=1'-0" | 1

NADEL Architects Inc.
1990 So. Bundy Dr.
Fourth Floor
Los Angeles, CA 90025
T. 310.826.2100
F. 310.826.0182
www.nadelarc.com

CONSULTANT

COUNTY OF LOS ANGELES
THE HALL OF JUSTICE
STRUCTURAL RETROFIT PHASE

REVISIONS

DRAWING TITLE

DEMOLITION FOURTH FLOOR PLAN

SCALE : 1/8"=1'-0"
DATE :
JOB NO :
SHEET NO.
(D)A2.04

SCOPING DOCUMENTS 100% SUBMISSION AUGUST 2010

ALL DRAWINGS AND WRITTEN MATERIAL APPEARING HEREIN CONSTITUTE THE ORIGINAL AND UNPUBLISHED WORK OF THE ARCHITECT AND THE SAME MAY NOT BE DUPLICATED, USED OR DISCLOSED WITHOUT THE WRITTEN CONSENT OF THE ARCHITECT. COPYRIGHT, NADEL ARCHITECTS INC., ALL RIGHTS RESERVED.

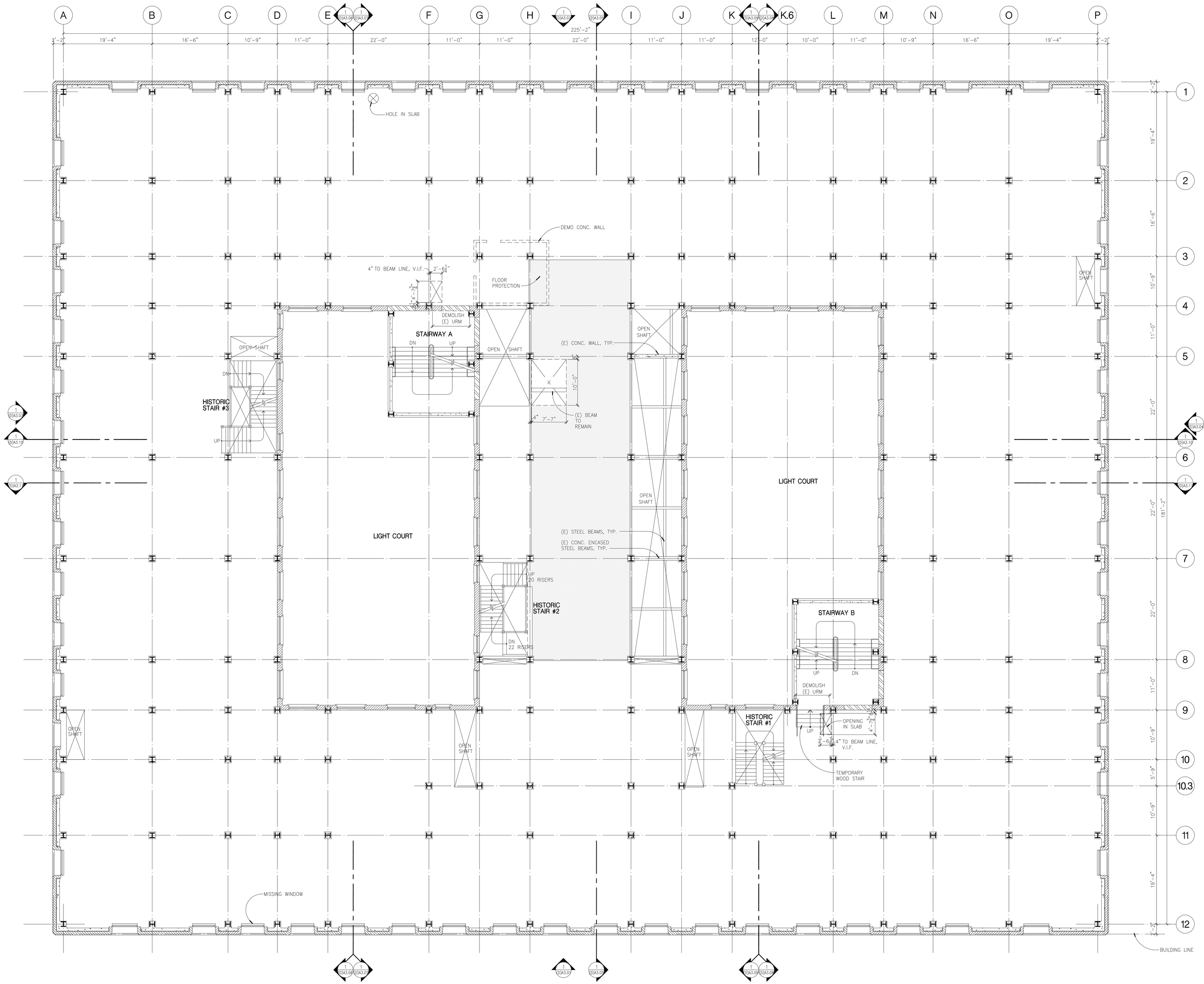

DEMOLITION NOTES / WALL MATERIALS LEGEND

1. VERIFY ALL EXISTING MATERIALS, DIMENSIONS, FLOOR ELEVATIONS, AND BUILDING CONDITIONS.
2. ALL STAIRS TO REMAIN EXCEPT AS INDICATED DASHED.
3. PROVIDE NEW OPENINGS IN EXISTING SLABS.
4. NOTES & SYMBOLS INDICATED APPLY TO THE GENERAL PROJECT. ALL NOTES DO NOT NECESSARILY APPLY TO ALL INDIVIDUAL SHEETS.
5. PROVIDE BARRIER IN ACCORDANCE WITH OSHA STANDARDS AT GRADE CHANGES & SLAB OPENINGS.
6. LEVEL CONCRETE SLAB FOR APPLICATION OF NEW ROOF IN ACCORDANCE WITH MANUFACTURE'S RECOMMENDATIONS.
7. REMOVE ALL MORTAR, METAL TIES, WOOD AND OTHER MATERIALS THAT PROJECTS BEYOND THE FACE OF THE URM AT HISTORIC STAIR AND LIGHTCOURT URM WALLS. SURFACE OF URM SHALL BE SMOOTH FOR INSTALLATION OF FIBER WRAP AND/OR STRONG BACKS.

- EXISTING STONE / TERRA-COTTA / MASONRY WITH OR WITHOUT STONE BASE TO REMAIN
- EXISTING CONCRETE WALL / COLUMN TO REMAIN
- EXISTING HOLLOW CLAY TILE PARTITION WITH STONE SURFACE TO REMAIN
- CONCRETE BLOCK WALL TO REMAIN
- PLASTER WITH OR WITHOUT MARBLE BASE AND/OR CERAMIC TILE ON HOLLOW CLAY TILE (HCT) FURRING OR PARTITION TO REMAIN.
- HOLLOW CLAY TILE PARTITION WITH PLASTER AND STONE BASE TO REMAIN
- HOLLOW CLAY TILE / UNREINFORCED MASONRY WITH NO FINISH TO REMAIN
- PLASTER / GYPSUM BOARD ON METAL STUD PARTITION OR FURRING TO REMAIN
- EXISTING OPENING IN FLOOR SLAB MAINTAIN BARRIER PER OSHA STANDARDS.
- CONCRETE WALL / TO BE DEMOLISHED
- CONCRETE BLOCK WALL TO BE DEMOLISHED
- PROVIDE NEW OPENING IN EXISTING FLOOR SLAB – PROVIDE BARRIER IN ACCORDANCE WITH OSHA STANDARDS
- RAISED FLOOR / CONCRETE PAD TO BE DEMOLISHED TO MATCH EXISTING SURROUNDING FLOOR ELEVATION. PATCH AND REPAIR FLOOR AS REQUIRED
- REMOVE PLYWOOD BOARDS FROM WINDOWS FOR INSTALLATION OF NEW WINDOW AND REHABILITATION OF EXISTING WINDOWS WHICH ARE TO REMAIN.
- DETERIORATED SLAB TO BE REMOVED AND REPLACED IN KIND. COLUMNS AND BEAMS TO REMAIN INTACT

4' 8'
0" 2" 4" 16'

N

DEMOLITION FIFTH FLOOR PLAN | SCALE: 1/8"=1'-0" | 1

NADEL
Architects Inc.

1990 So. Bundy Dr.
Fourth Floor
Los Angeles, CA 90025

T. 310.826.2100
F. 310.826.0182

www.nadelarc.com

CONSULTANT

COUNTY OF LOS ANGELES
THE HALL OF JUSTICE
STRUCTURAL RETROFIT PHASE

REVISIONS

DRAWING TITLE

DEMOLITION FIFTH FLOOR PLAN

SCALE : 1/8"=1'-0"
DATE :
JOB NO :
SHEET NO.

(D)A2.05

SCOPING DOCUMENTS 100% SUBMISSION AUGUST 2010

ALL DRAWINGS AND WRITTEN MATERIAL APPEARING HEREIN CONSTITUTE THE ORIGINAL AND UNPUBLISHED WORK OF THE ARCHITECT AND THE SAME MAY NOT BE DUPLICATED, USED OR DISCLOSED WITHOUT THE WRITTEN CONSENT OF THE ARCHITECT. COPYRIGHT: NADEL ARCHITECTS INC. ALL RIGHTS RESERVED.

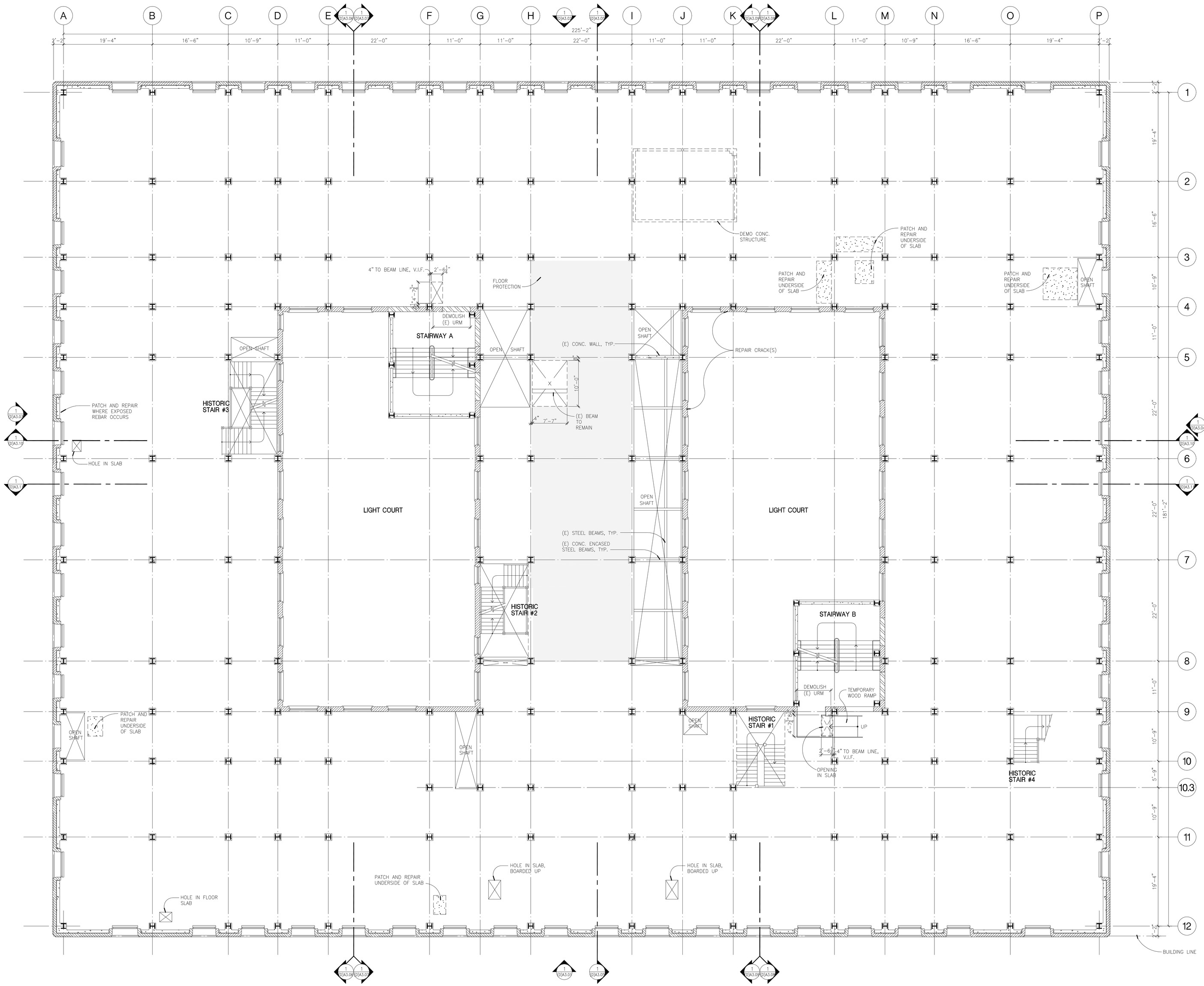

DEMOLITION NOTES / WALL MATERIALS LEGEND

1. VERIFY ALL EXISTING MATERIALS, DIMENSIONS, FLOOR ELEVATIONS, AND BUILDING CONDITIONS.
2. ALL STAIRS TO REMAIN EXCEPT AS INDICATED DASHED.
3. PROVIDE NEW OPENINGS IN EXISTING SLABS.
4. NOTES & SYMBOLS INDICATED APPLY TO THE GENERAL PROJECT. ALL NOTES DO NOT NECESSARILY APPLY TO ALL INDIVIDUAL SHEETS.
5. PROVIDE BARRIER IN ACCORDANCE WITH OSHA STANDARDS AT GRADE CHANGES & SLAB OPENINGS.
6. LEVEL CONCRETE SLAB FOR APPLICATION OF NEW ROOF IN ACCORDANCE WITH MANUFACTURE'S RECOMMENDATIONS.
7. REMOVE ALL MORTAR, METAL TIES, WOOD AND OTHER MATERIALS THAT PROJECTS BEYOND THE FACE OF THE URM AT HISTORIC STAIR AND LIGHTCOURT URM WALLS. SURFACE OF URM SHALL BE SMOOTH FOR INSTALLATION OF FIBER WRAP AND/OR STRONG BACKS.

- EXISTING STONE / TERRA-COTTA / MASONRY WITH OR WITHOUT STONE BASE TO REMAIN
- EXISTING CONCRETE WALL / COLUMN TO REMAIN
- EXISTING HOLLOW CLAY TILE PARTITION WITH STONE SURFACE TO REMAIN
- CONCRETE BLOCK WALL TO REMAIN
- PLASTER WITH OR WITHOUT MARBLE BASE AND/OR CERAMIC TILE ON HOLLOW CLAY TILE (HCT) FURRING OR PARTITION TO REMAIN.
- HOLLOW CLAY TILE PARTITION WITH PLASTER AND STONE BASE TO REMAIN
- HOLLOW CLAY TILE / UNREINFORCED MASONRY WITH NO FINISH TO REMAIN
- PLASTER / GYPSUM BOARD ON METAL STUD PARTITION OR FURRING TO REMAIN
- EXISTING OPENING IN FLOOR SLAB MAINTAIN BARRIER PER OSHA STANDARDS.
- CONCRETE WALL / TO BE DEMOLISHED
- CONCRETE BLOCK WALL TO BE DEMOLISHED
- PROVIDE NEW OPENING IN EXISTING FLOOR SLAB - PROVIDE BARRIER IN ACCORDANCE WITH OSHA STANDARDS
- RAISED FLOOR / CONCRETE PAD TO BE DEMOLISHED TO MATCH EXISTING SURROUNDING FLOOR ELEVATION. PATCH AND REPAIR FLOOR AS REQUIRED
- REMOVE PLYWOOD BOARDS FROM WINDOWS FOR INSTALLATION OF NEW WINDOW AND REHABILITATION OF EXISTING WINDOWS WHICH ARE TO REMAIN.
- DETERIORATED SLAB TO BE REMOVED AND REPLACED IN KIND. COLUMNS AND BEAMS TO REMAIN INTACT

4' 8' 0" 2" 6" 16"

N

DEMOLITION SIXTH FLOOR PLAN | SCALE: 1/8"=1'-0" | 1

NADEL Architects Inc.

1990 So. Bundy Dr.
Fourth Floor
Los Angeles, CA 90025

T. 310.826.2100
F. 310.826.0182

www.nadelarc.com

CONSULTANT

COUNTY OF LOS ANGELES
THE HALL OF JUSTICE
STRUCTURAL RETROFIT PHASE

REVISIONS

DRAWING TITLE

DEMOLITION SIXTH FLOOR PLAN

SCOPING DOCUMENTS | 100% SUBMISSION | AUGUST 2010

SCALE : 1/8"=1'-0"
DATE :
JOB NO :
SHEET NO.

(D)A2.06

ALL DRAWINGS AND WRITTEN MATERIAL APPEARING HEREIN CONSTITUTE THE ORIGINAL AND UNPUBLISHED WORK OF THE ARCHITECT AND THE SAME MAY NOT BE DUPLICATED, USED OR DISCLOSED WITHOUT THE WRITTEN CONSENT OF THE ARCHITECT. COPYRIGHT. NADEL ARCHITECTS INC. ALL RIGHTS RESERVED.

ALL DRAWINGS AND WRITTEN MATERIAL APPEARING HEREIN CONSTITUTE THE ORIGINAL AND UNPUBLISHED WORK OF THE ARCHITECT AND THE SAME MAY NOT BE DUPLICATED, USED OR DISCLOSED WITHOUT THE WRITTEN CONSENT OF THE ARCHITECT. COPYRIGHT: NADEL ARCHITECTS INC. ALL RIGHTS RESERVED.

DEMOLITION SEVENTH FLOOR PLAN

SCALE: 1/8"=1'-0" | 1

N

0' 2' 8' 4' 8' 16'

BUILDING LINE

HISTORIC STAIR #4

HISTORIC STAIR #2

HISTORIC STAIR #3

STAIRWAY B

STAIRWAY A

LIGHT COURT

LIGHT COURT

OPEN SHAFT

OPEN SHAFT

OPEN SHAFT

OPEN SHAFT

OPEN SHAFT

OPEN SHAFT

OPEN SHAFT

OPEN SHAFT

PATCH AND REPAIR UNDERSIDE OF SLAB

PATCH AND REPAIR UNDERSIDE OF SLAB

PATCH AND REPAIR UNDERSIDE OF SLAB

PATCH AND REPAIR UNDERSIDE OF SLAB

PATCH AND REPAIR UNDERSIDE OF SLAB

DEMO TO BEAM TOP

DEMO TO BEAM TOP

REPAIR CRACK(S)

TEMPDEARY WOOD STAIR

DEMOLISH (E) WRM

DEMOLISH (E) WRM

(E) STEEL BEAMS, TYP.

(E) CONC. ENCASED STEEL BEAMS, TYP.

(E) CONC. WALL, TYP.

(E) BEAM TO REMAIN

FLOOR PROTECTION

19 RISERS UP

25 RISERS DN

DN

UP

DN

UP

DN

UP

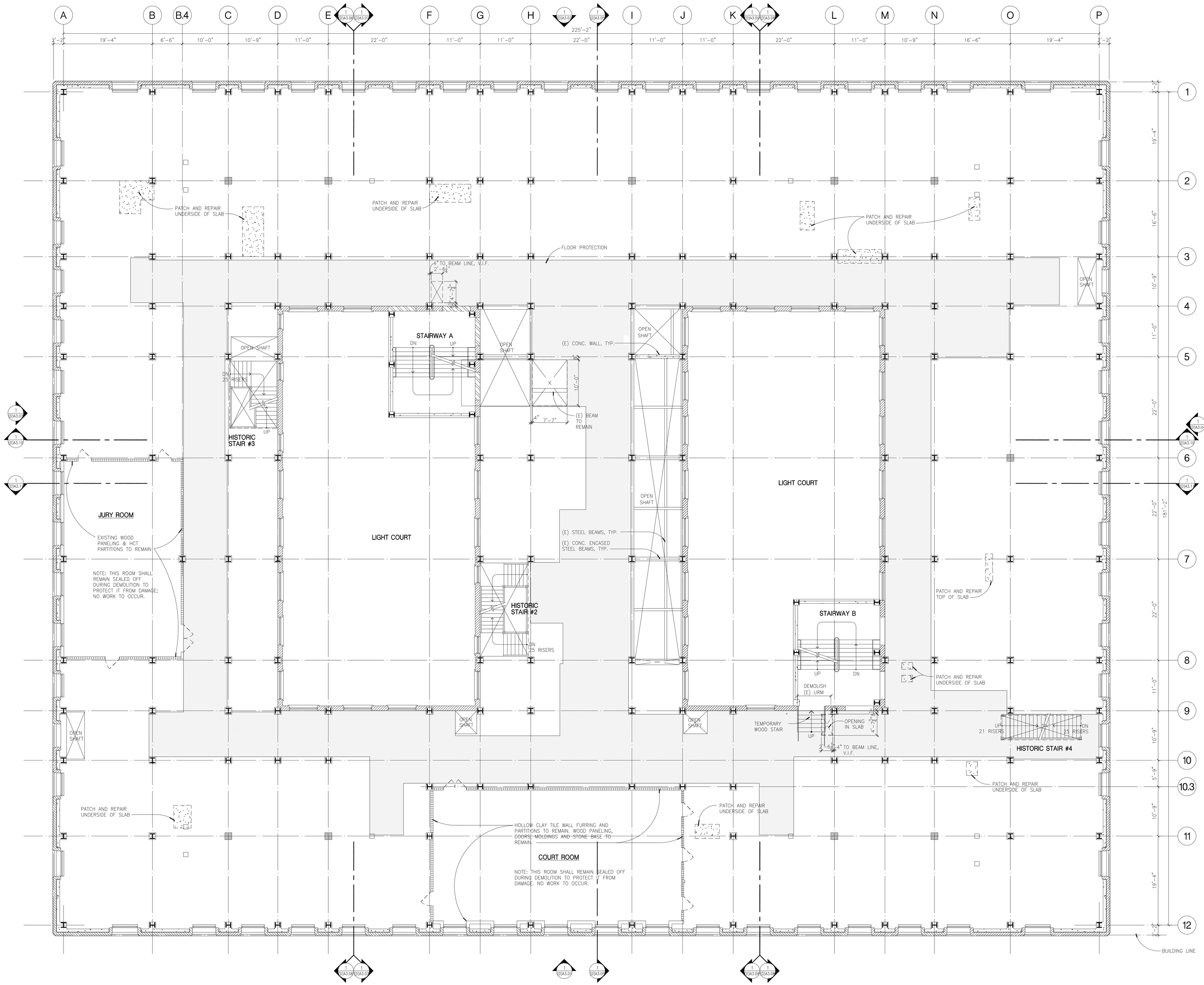

DEMOLITION NOTES / WALL MATERIALS LEGEND

1. VERIFY ALL EXISTING MATERIALS, DIMENSIONS, FLOOR ELEVATIONS, AND BUILDING CONDITIONS.
2. ALL STAIRS TO REMAIN EXCEPT AS INDICATED DASHED.
3. PROVIDE NEW OPENINGS IN EXISTING SLABS.
4. NOTES & SYMBOLS INDICATED APPLY TO THE GENERAL PROJECT. ALL NOTES DO NOT NECESSARILY APPLY TO ALL INDIVIDUAL SHEETS.
5. PROVIDE BARRIER IN ACCORDANCE WITH OSHA STANDARDS AT GRADE CHANGES & SLAB OPENINGS.
6. LEVEL CONCRETE SLAB FOR APPLICATION OF NEW ROOF IN ACCORDANCE WITH MANUFACTURE'S RECOMMENDATIONS.
7. REMOVE ALL MORTAR, METAL TIES, WOOD AND OTHER MATERIALS THAT PROJECTS BEYOND THE FACE OF THE URM AT HISTORIC STAIR AND LIGHTCOURT URM WALLS. SURFACE OF URM SHALL BE SMOOTH FOR INSTALLATION OF FIBER WRAP AND/OR STRONG BACKS.

- EXISTING STONE / TERRA-COTTA / MASONRY WITH OR WITHOUT STONE BASE TO REMAIN
- EXISTING CONCRETE WALL / COLUMN TO REMAIN
- EXISTING HOLLOW CLAY TILE PARTITION WITH STONE SURFACE TO REMAIN
- CONCRETE BLOCK WALL TO REMAIN
- PLASTER WITH OR WITHOUT MARBLE BASE AND/OR CERAMIC TILE ON HOLLOW CLAY TILE (HCT) FURRING OR PARTITION TO REMAIN.
- HOLLOW CLAY TILE PARTITION WITH PLASTER AND STONE BASE TO REMAIN
- HOLLOW CLAY TILE / UNREINFORCED MASONRY WITH NO FINISH TO REMAIN
- PLASTER / GYPSUM BOARD ON METAL STUD PARTITION OR FURRING TO REMAIN
- EXISTING OPENING IN FLOOR SLAB MAINTAIN BARRIER PER OSHA STANDARDS.
- CONCRETE WALL / TO BE DEMOLISHED
- CONCRETE BLOCK WALL TO BE DEMOLISHED
- PROVIDE NEW OPENING IN EXISTING FLOOR SLAB – PROVIDE BARRIER IN ACCORDANCE WITH OSHA STANDARDS
- RAISED FLOOR / CONCRETE PAD TO BE DEMOLISHED TO MATCH EXISTING SURROUNDING FLOOR ELEVATION. PATCH AND REPAIR FLOOR AS REQUIRED
- REMOVE PLYWOOD BOARDS FROM WINDOWS FOR INSTALLATION OF NEW WINDOW AND REHABILITATION OF EXISTING WINDOWS WHICH ARE TO REMAIN.
- DETERIORATED SLAB TO BE REMOVED AND REPLACED IN KIND. COLUMNS AND BEAMS TO REMAIN INTACT

4' 8'
0' 2' 4' 16'
N

DEMOLITION EIGHTH FLOOR PLAN | SCALE: 1/8"=1'-0" | 1

NADEL Architects Inc.
1990 So. Bundy Dr.
Fourth Floor
Los Angeles, CA 90025
T. 310.826.2100
F. 310.826.0182
www.nadelarc.com

CONSULTANT

COUNTY OF LOS ANGELES
THE HALL OF JUSTICE
STRUCTURAL RETROFIT PHASE

REVISIONS

DRAWING TITLE

DEMOLITION EIGHTH FLOOR PLAN

SCALE : 1/8"=1'-0"
DATE :
JOB NO :
SHEET NO.
(D)A2.08

SCOPING DOCUMENTS 100% SUBMISSION AUGUST 2010

ALL DRAWINGS AND WRITTEN MATERIAL APPEARING HEREIN CONSTITUTE THE ORIGINAL AND UNPUBLISHED WORK OF THE ARCHITECT AND THE SAME MAY NOT BE DUPLICATED, USED OR DISCLOSED WITHOUT THE WRITTEN CONSENT OF THE ARCHITECT. COPYRIGHT: NADEL ARCHITECTS INC. ALL RIGHTS RESERVED.

ALL DRAWINGS AND MATTER MATERIAL APPEARING HEREIN CONSTITUTE THE ORIGINAL AND UNPUBLISHED WORK OF THE ARCHITECT AND THE SAME MAY NOT BE DUPLICATED, USED OR DISCLOSED WITHOUT THE WRITTEN CONSENT OF THE ARCHITECT. COPYRIGHT: NADEL ARCHITECTS INC. ALL RIGHTS RESERVED.

DEMOLITION NINTH FLOOR PLAN

SCALE: 1/8"=1'-0" | 1

N

0' 2' 8' 16'
4' 8'

BULDING LINE

HOLLOW CLAY TILE TO REMAIN

OPEN TO BELOW

HOLLOW CLAY TILE TO REMAIN

TEMPORARY WOOD RAMP

4" TO BEAM LINE. V.I.F.

OPENING IN SLAB

HISTORIC STAIR 21 RISERS TO REMAIN

HISTORIC STAIR #4

STAIRWAY B

UP

DN

PIPE SHAFT

PIPES

OPEN SHAFT

STAIR #6

(E) STEEL BEAMS, TYP.

(E) CONC. ENCASED STEEL BEAMS, TYP.

PATCH AND REPAIR SLAB DEPRESSION TO MATCH FLOOR ELEVATION

LIGHT COURT

OPEN SHAFT

(E) CONC. WALL, TYP.

(E) BEAM TO REMAIN

STAIRWAY A

OPEN SHAFT

PRISON STAIR #3

FLOOR PROTECTION

4" TO BEAM LINE, V.I.F.

PATCH AND REPAIR UNDERSIDE OF SLAB

NOTE: THIS ROOM SHALL REMAIN SEALED OFF TO PROTECT FROM DAMAGE. NO WORK TO OCCUR.

19'-4"	
10'-9"	
5'-6"	
10'-9"	
11'-0"	
22'-0"	
18'1"-2"	
22'-0"	
11'-0"	
16'-6"	
19'-4"	
2'-2"	

2'-2"	19'-4"	6'-6"	10'-0"	10'-9"	11'-0"	22'-0"	11'-0"	11'-0"	22'-0"	11'-0"	11'-0"	22'-0"	22'5"-2"	11'-0"	11'-0"	11'-0"	22'-0"	11'-0"	16'-6"	19'-4"	2'-2"		
	A	B	B4	C	D	E	F	G	H	I	J	K	L	M	N	O	P						

1. VERIFY ALL EXISTING MATERIALS, DIMENSIONS, FLOOR ELEVATIONS, AND BUILDING CONDITIONS.
2. ALL STAIRS TO REMAIN EXCEPT AS INDICATED DASHED.
3. PROVIDE NEW OPENINGS IN EXISTING SLABS.
4. NOTES & SYMBOLS INDICATED APPLY TO THE GENERAL PROJECT. ALL NOTES DO NOT NECESSARILY APPLY TO ALL INDIVIDUAL SHEETS.
5. PROVIDE BARRIER IN ACCORDANCE WITH OSHA STANDARDS AT GRADE CHANGES & SLAB OPENINGS.
6. LEVEL CONCRETE SLAB FOR APPLICATION OF NEW ROOF IN ACCORDANCE WITH MANUFACTURE'S RECOMMENDATIONS.
7. REMOVE ALL MORTAR, METAL TIES, WOOD AND OTHER MATERIALS THAT PROJECTS BEYOND THE FACE OF THE URM AT HISTORIC STAIR AND LIGHTCOURT URM WALLS. SURFACE OF URM SHALL BE SMOOTH FOR INSTALLATION OF FIBER WRAP AND/OR STRONG BACKS.

DEMOLITION NOTES / WALL MATERIALS LEGEND

- EXISTING STONE / TERRA-COTTA / MASONRY WITH OR WITHOUT STONE BASE TO REMAIN
- EXISTING CONCRETE WALL / COLUMN TO REMAIN
- EXISTING HOLLOW CLAY TILE PARTITION WITH STONE SURFACE TO REMAIN
- CONCRETE BLOCK WALL TO REMAIN
- PLASTER WITH OR WITHOUT MARBLE BASE AND/OR CERAMIC TILE ON HOLLOW CLAY TILE (HCT) FURRING OR PARTITION TO REMAIN.
- HOLLOW CLAY TILE PARTITION WITH PLASTER AND STONE BASE TO REMAIN
- HOLLOW CLAY TILE / UNREINFORCED MASONRY WITH NO FINISH TO REMAIN
- PLASTER / CYPSUM BOARD ON METAL STUD PARTITION OR FURRING TO REMAIN
- EXISTING OPENING IN FLOOR SLAB MAINTAIN BARRIER PER OSHA STANDARDS.
- CONCRETE WALL / TO BE DEMOLISHED
- CONCRETE BLOCK WALL TO BE DEMOLISHED
- PROVIDE NEW OPENING IN EXISTING FLOOR SLAB – PROVIDE BARRIER IN ACCORDANCE WITH OSHA STANDARDS
- RAISED FLOOR / CONCRETE PAD TO BE DEMOLISHED TO MATCH EXISTING SURROUNDING FLOOR ELEVATION. PATCH AND REPAIR FLOOR AS REQUIRED
- REMOVE PLYWOOD BOARDS FROM WINDOWS FOR INSTALLATION OF NEW WINDOW AND REHABILITATION OF EXISTING WINDOWS WHICH ARE TO REMAIN.
- DETERIORATED SLAB TO BE REMOVED AND REPLACED IN KIND. COLUMNS AND BEAMS TO REMAIN INTACT

NADEL Architects Inc.
1990 So. Bundy Dr.
Fourth Floor
Los Angeles, CA 90025
T. 310.826.2100
F. 310.826.0182
www.nadelarc.com

CONSULTANT

REVISIONS

DRAWING TITLE

SCALE : 1/8"=1'-0"
DATE :
JOB NO :
SHEET NO. (D)A2.09

SCOPING DOCUMENTS 100% SUBMISSION AUGUST 2010

COUNTY OF LOS ANGELES
THE HALL OF JUSTICE
STRUCTURAL RETROFIT PHASE

ALL DRAWINGS AND MATTER MATERIAL APPEARING HEREIN CONSTITUTE THE ORIGINAL AND UNPUBLISHED WORK OF THE ARCHITECT AND THE SAME MAY NOT BE DUPLICATED, USED OR DISCLOSED WITHOUT THE WRITTEN CONSENT OF THE ARCHITECT. COPYRIGHT: NADEL ARCHITECTS INC. ALL RIGHTS RESERVED.

DEMOLITION TENTH FLOOR PLAN

SCALE: 1/8"=1'-0" | 1

N

0' 2' 6' 16'
4' 8'

BUILDING LINE

GRID: 12 · 10.8 · 11 · 10 · 9 · 8 · 7 · 6 · 5 · 4 · 3 · 22 · 2 · 12 · 1

GRID: A · A2 · B · B2 · C · D · E · F · G · H · I · J · K · L · M · N · N.8 · O · O.8 · P

2'-2" 4'-5" 14'-11" 4'-0" 12'-6" 10'-9" 11'-0" 22'-0" 22'-0" 18'-2" 22'-0" 11'-0" 10'-9" 12'-6" 4'-0" 14'-11" 4'-5" 2'-2"

225'-2"

2'-2" 4'-5" 14'-11" 3'-9" 12'-9" 10'-9" 11'-0" 22'-0" 11'-0" 11'-0" 22'-0" 11'-0" 11'-0" 22'-0" 11'-0" 10'-9" 12'-9" 3'-9" 14'-11" 4'-5" 2'-2"

LIGHT COURT

LIGHT COURT

STAIRWAY B

STAIRWAY A

STAIR #6

PRISON STAIR #6

PRISON STAIR #7

PRISON STAIR #3

16 RISERS

DEMOLISH (E) U&M

DEMO CONCRETE PADS, TYPICAL

OPEN SHAFT

OPEN SHAFT

OPEN SHAFT

PIPE SHAFT

PATCH AND REPAIR UNDERSIDE OF SLAB

PATCH AND REPAIR UNDERSIDE OF SLAB

HOLE IN SLAB

4"ø TO BEAM LINE, TYP.

4"ø TO BEAM LINE, VIF.

(E) BEAM TO REMAIN

DETERIORATED SLAB TO BE REMOVED AND REPLACED IN KIND. COLUMNS & BEAMS TO REMAIN, TYPICAL

DEMOLITION NOTES / WALL MATERIALS LEGEND

1. VERIFY ALL EXISTING MATERIALS, DIMENSIONS, FLOOR ELEVATIONS, AND BUILDING CONDITIONS.
2. ALL STAIRS TO REMAIN EXCEPT AS INDICATED DASHED.
3. PROVIDE NEW OPENINGS IN EXISTING SLABS.
4. NOTES & SYMBOLS INDICATED APPLY TO THE GENERAL PROJECT. ALL NOTES DO NOT NECESSARILY APPLY TO ALL INDIVIDUAL SHEETS.
5. PROVIDE BARRIER IN ACCORDANCE WITH OSHA STANDARDS AT GRADE CHANGES & SLAB OPENINGS.
6. LEVEL CONCRETE SLAB FOR APPLICATION OF NEW ROOF IN ACCORDANCE WITH MANUFACTURE'S RECOMMENDATIONS.
7. REMOVE ALL MORTAR, METAL TIES, WOOD AND OTHER MATERIALS THAT PROJECTS BEYOND THE FACE OF THE UBM AT HISTORIC STAIR AND LIGHTCOURT UBM WALLS. SURFACE OF UBM SHALL BE SMOOTH FOR INSTALLATION OF FIBER WRAP AND/OR STRONG BACKS.

EXISTING STONE / TERRA-COTTA / MASONRY WITH OR WITHOUT STONE BASE TO REMAIN

EXISTING CONCRETE WALL / COLUMN TO REMAIN

EXISTING HOLLOW CLAY TILE PARTITION WITH STONE SURFACE TO REMAIN

CONCRETE BLOCK WALL TO REMAIN

PLASTER WITH OR WITHOUT MARBLE BASE AND/OR CERAMIC TILE ON HOLLOW CLAY TILE (HCT) FURRING OR PARTITION TO REMAIN.

HOLLOW CLAY TILE PARTITION WITH PLASTER AND STONE BASE TO REMAIN

HOLLOW CLAY TILE / UNREINFORCED MASONRY WITH NO FINISH TO REMAIN

PLASTER / GYPSUM BOARD ON METAL STUD PARTITION OR FURRING TO REMAIN

EXISTING OPENING IN FLOOR SLAB MAINTAIN BARRIER PER OSHA STANDARDS.

CONCRETE WALL / TO BE DEMOLISHED

CONCRETE BLOCK WALL TO BE DEMOLISHED

PROVIDE NEW OPENING IN EXISTING FLOOR SLAB – PROVIDE BARRIER IN ACCORDANCE WITH OSHA STANDARDS

RAISED FLOOR / CONCRETE PAD TO BE DEMOLISHED TO MATCH EXISTING SURROUNDING FLOOR ELEVATION. PATCH AND REPAIR FLOOR AS REQUIRED

REMOVE PLYWOOD BOARDS FROM WINDOWS FOR INSTALLATION OF NEW WINDOW AND REHABILITATION OF EXISTING WINDOWS WHICH ARE TO REMAIN.

DETERIORATED SLAB TO BE REMOVED AND REPLACED IN KIND. COLUMNS AND BEAMS TO REMAIN INTACT

DEMOLITION TENTH FLOOR PLAN

SCOPING DOCUMENTS | 100% SUBMISSION | AUGUST 2010

DRAWING TITLE

REVISIONS

CONSULTANT

1990 So. Bundy Dr.
Fourth Floor
Los Angeles, CA 90025
T. 310.826.2100
F. 310.826.0182
www.nadelarc.com

NADEL Architects Inc.

COUNTY OF LOS ANGELES

THE HALL OF JUSTICE

STRUCTURAL RETROFIT PHASE

SCALE : 1/8"=1'-0"
DATE :
JOB NO :
SHEET NO. (D)A2.10

ALL DRAWINGS AND WRITTEN MATERIAL APPEARING HEREIN CONSTITUTE THE ORIGINAL AND UNPUBLISHED WORK OF THE ARCHITECT AND THE SAME MAY NOT BE DUPLICATED, USED OR DISCLOSED WITHOUT THE WRITTEN CONSENT OF THE ARCHITECT. COPYRIGHT: NADEL ARCHITECTS INC. ALL RIGHTS RESERVED.

DEMOLITION ELEVENTH FLOOR PLAN

SCALE: 1/8"=1'-0" | 1

N

0' 2' 8' 4' 8' 16'

BUILDING LINE

DEMOLISH CONCRETE FLOOR SLAB AND BEAMS

DEMOLISH CONCRETE FLOOR SLAB AND BEAMS

DEMOLISH CONCRETE FLOOR SLAB AND BEAMS

DEMOLITION CUT LINE – CUT TIGHT TO PERIMETER BEAMS AND COLUMNS

DEMOLITION CUT LINE – CUT TIGHT TO PERIMETER BEAMS AND COLUMNS

DEMOLITION CUT LINE

LIGHT COURT

LIGHT COURT

STAIRWAY B

STAIRWAY TO REMAIN

STAIRWAY A

STAIRWAY TO REMAIN

STAIR #5

STAIR #3

UP

DN

DEMOLITION NOTES / WALL MATERIALS LEGEND

1. VERIFY ALL EXISTING MATERIALS, DIMENSIONS, FLOOR ELEVATIONS, AND BUILDING CONDITIONS.
2. ALL STAIRS TO REMAIN EXCEPT AS INDICATED DASHED.
3. PROVIDE NEW OPENINGS IN EXISTING SLABS.
4. NOTES & SYMBOLS INDICATED APPLY TO THE GENERAL PROJECT. ALL NOTES DO NOT NECESSARILY APPLY TO ALL INDIVIDUAL SHEETS.
5. PROVIDE BARRIER IN ACCORDANCE WITH OSHA STANDARDS AT OPENINGS & SLAB OPENINGS.
6. LEVEL CONCRETE SLAB FOR APPLICATION OF NEW ROOF IN ACCORDANCE WITH MANUFACTURER'S RECOMMENDATIONS.
7. REMOVE ALL MORTAR, METAL TIES, WOOD AND OTHER MATERIALS THAT PROJECTS BEYOND THE FACE OF THE URM AT HISTORIC STAIR AND LIGHTCOURT URM WALLS. SURFACE OF URM SHALL BE SMOOTH FOR INSTALLATION OF FIBER WRAP AND/OR STRONG BACKS.

- EXISTING STONE / TERRA-COTTA / MASONRY WITH OR WITHOUT STONE BASE TO REMAIN
- EXISTING CONCRETE WALL / COLUMN TO REMAIN
- EXISTING HOLLOW CLAY TILE PARTITION WITH STONE SURFACE TO REMAIN
- CONCRETE BLOCK WALL TO REMAIN
- PLASTER WITH OR WITHOUT MARBLE BASE AND/OR CERAMIC TILE ON HOLLOW CLAY TILE (HCT) FURRING OR PARTITION TO REMAIN.
- HOLLOW CLAY TILE PARTITION WITH PLASTER AND STONE BASE TO REMAIN
- HOLLOW CLAY TILE / UNREINFORCED MASONRY WITH NO FINISH TO REMAIN
- PLASTER / GYPSUM BOARD ON METAL STUD PARTITION OR FURRING TO REMAIN
- EXISTING OPENING IN FLOOR SLAB MAINTAIN BARRIER PER OSHA STANDARDS.
- CONCRETE WALL / TO BE DEMOLISHED
- CONCRETE BLOCK WALL TO BE DEMOLISHED
- PROVIDE NEW OPENING IN EXISTING FLOOR SLAB – PROVIDE BARRIER IN ACCORDANCE WITH OSHA STANDARDS
- RAISED FLOOR / CONCRETE PAD TO BE DEMOLISHED TO MATCH EXISTING SURROUNDING FLOOR ELEVATION. PATCH AND REPAIR FLOOR AS REQUIRED
- REMOVE PLYWOOD BOARDS FROM WINDOWS FOR INSTALLATION OF NEW WINDOW AND REHABILITATION OF EXISTING WINDOWS WHICH ARE TO REMAIN.
- DETERIORATED SLAB TO BE REMOVED AND REPLACED IN KIND. COLUMNS AND BEAMS TO REMAIN INTACT

NADEL Architects Inc.
1990 So. Bundy Dr.
Fourth Floor
Los Angeles, CA 90025
T. 310.826.2100
F. 310.826.0182
www.nadelarc.com

CONSULTANT

DRAWING TITLE

DEMOLITION ELEVENTH FLOOR PLAN

REVISIONS

SCALE : 1/8"=1'-0"
DATE :
JOB NO :
SHEET NO. **(D)A2.11**

COUNTY OF LOS ANGELES
THE HALL OF JUSTICE
STRUCTURAL RETROFIT PHASE

SCOPING DOCUMENTS 100% SUBMISSION AUGUST 2010

ALL DRAWINGS AND WRITTEN MATERIAL APPEARING HEREIN CONSTITUTE THE ORIGINAL AND UNPUBLISHED WORK OF THE ARCHITECT AND THE SAME MAY NOT BE DUPLICATED, USED OR DISCLOSED WITHOUT THE WRITTEN CONSENT OF THE ARCHITECT. COPYRIGHT: NADEL ARCHITECTS INC. ALL RIGHTS RESERVED.

DEMOLITION TWELFTH FLOOR PLAN

SCALE: 1/8"=1'-0"

1

N

0' 2' 4' 8' 16'

BUILDING LINE

REMOVE, PATCH AND REPAIR CRACKED TOPPING SLAB

OPEN SHAFT

LIGHT COURT

STAIRWAY B

STAIRWAY A

PRISON STAIR #3

PRISON STAIR #5

DEMOLISH (E) WALL

DEMOLISH (E) BEAM

DEMOLISH (E) UBM

UP

DN

PIPE SHAFT

OPEN SHAFT

OPEN

OPEN SHAFT

OPEN SHAFT

OPEN SHAFT

ALL DRAWINGS AND WRITTEN MATERIAL APPEARING HEREIN CONSTITUTE THE ORIGINAL AND UNPUBLISHED WORK OF THE ARCHITECT AND THE SAME MAY NOT BE DUPLICATED, USED OR DISCLOSED WITHOUT THE WRITTEN CONSENT OF THE ARCHITECT. COPYRIGHT: NADEL ARCHITECTS INC. ALL RIGHTS RESERVED.

DEMOLITION THIRTEENTH FLOOR PLAN

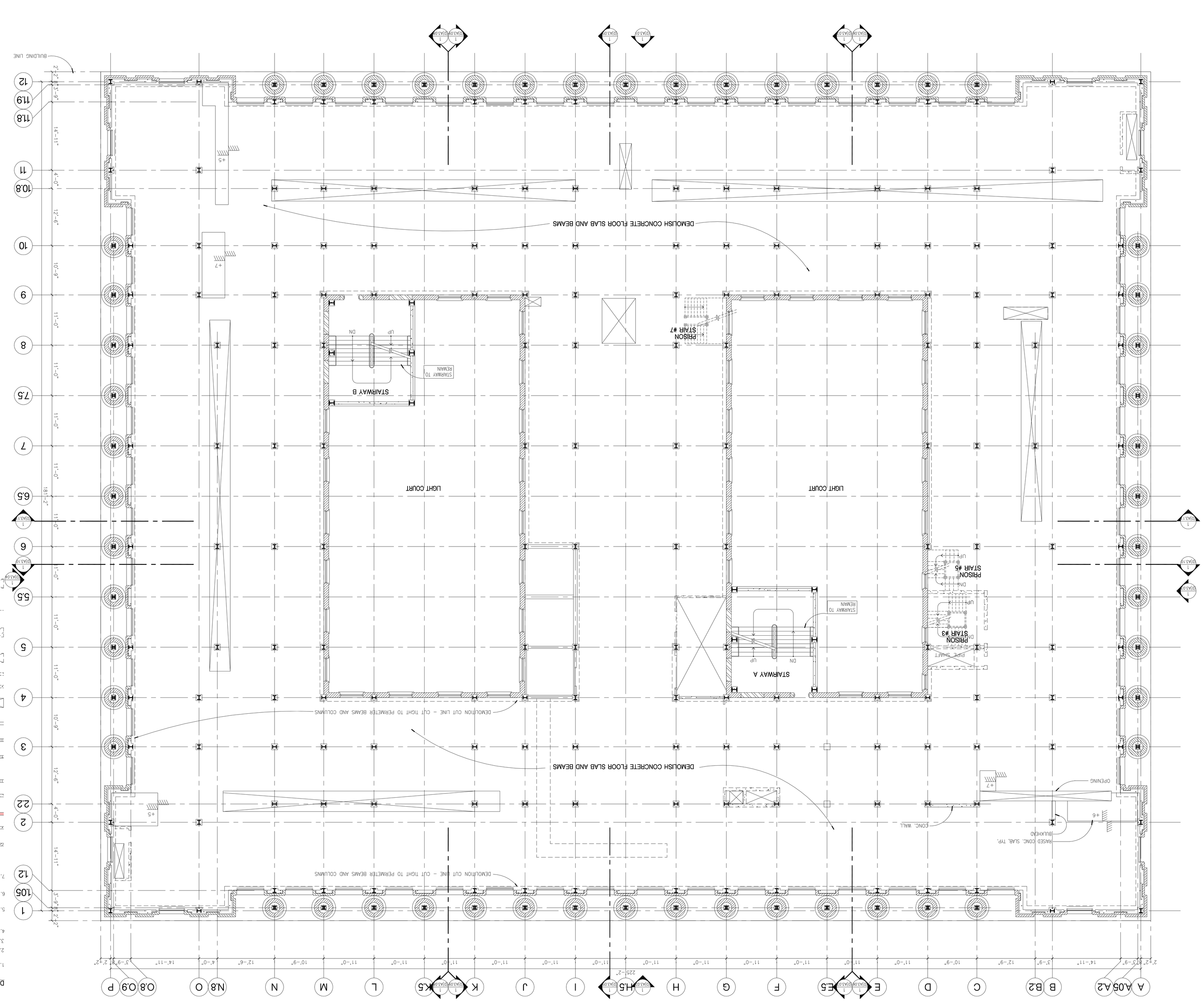

DEMOLITION NOTES / WALL MATERIALS LEGEND

1. VERIFY ALL EXISTING MATERIALS, DIMENSIONS, FLOOR ELEVATIONS, AND BUILDING CONDITIONS.
2. ALL STAIRS TO REMAIN EXCEPT AS INDICATED DASHED.
3. PROVIDE NEW OPENINGS IN EXISTING SLABS.
4. NOTES & SYMBOLS INDICATED APPLY TO THE GENERAL PROJECT. ALL NOTES DO NOT NECESSARILY APPLY TO ALL INDIVIDUAL SHEETS.
5. PROVIDE BARRIER IN ACCORDANCE WITH OSHA STANDARDS AT GRADE CHANGES & SLAB OPENINGS.
6. LEVEL CONCRETE SLAB FOR APPLICATION OF NEW ROOF IN ACCORDANCE WITH MANUFACTURE'S RECOMMENDATIONS.
7. REMOVE ALL MORTAR, METAL TIES, WOOD AND OTHER MATERIALS THAT PROJECTS BEYOND THE FACE OF THE URM AT HISTORIC STAIR AND LIGHTCOURT URM WALLS. SURFACE OF URM SHALL BE SMOOTH FOR INSTALLATION OF FIBER WRAP AND/OR STRONG BACKS.

EXISTING STONE / TERRA-COTTA / MASONRY WITH OR WITHOUT STONE BASE TO REMAIN

EXISTING CONCRETE WALL / COLUMN TO REMAIN

EXISTING HOLLOW CLAY TILE PARTITION WITH STONE SURFACE TO REMAIN

CONCRETE BLOCK WALL TO REMAIN

PLASTER WITH OR WITHOUT MARBLE BASE AND/OR CERAMIC TILE ON HOLLOW CLAY TILE (HCT) FURRING OR PARTITION TO REMAIN.

HOLLOW CLAY TILE PARTITION WITH PLASTER AND STONE BASE TO REMAIN

HOLLOW CLAY TILE / UNREINFORCED MASONRY WITH NO FINISH TO REMAIN

PLASTER / GYPSUM BOARD ON METAL STUD PARTITION OR FURRING TO REMAIN

EXISTING OPENING IN FLOOR SLAB MAINTAIN BARRIER PER OSHA STANDARDS.

CONCRETE WALL / TO BE DEMOLISHED

CONCRETE BLOCK WALL TO BE DEMOLISHED

PROVIDE NEW OPENING IN EXISTING FLOOR SLAB - PROVIDE BARRIER IN ACCORDANCE WITH OSHA STANDARDS

RAISED FLOOR / CONCRETE PAD TO BE DEMOLISHED TO MATCH EXISTING SURROUNDING FLOOR ELEVATION. PATCH AND REPAIR FLOOR AS REQUIRED

REMOVE PLYWOOD BOARDS FROM WINDOWS FOR INSTALLATION OF NEW WINDOW AND REHABILITATION OF EXISTING WINDOWS WHICH ARE TO REMAIN.

DETERIORATED SLAB TO BE REMOVED AND REPLACED IN KIND. COLUMNS AND BEAMS TO REMAIN INTACT

NADEL Architects Inc.
1990 So. Bundy Dr.
Fourth Floor
Los Angeles, CA 90025
T. 310.826.2100
F. 310.826.0182
www.nadelarc.com

CONSULTANT

REVISIONS

DRAWING TITLE

COUNTY OF LOS ANGELES
THE HALL OF JUSTICE
STRUCTURAL RETROFIT PHASE

SCOPING DOCUMENTS 100% SUBMISSION AUGUST 2010

DEMOLITION THIRTEENTH FLOOR PLAN

SCALE : 1/8"=1'-0"
DATE :
JOB NO :
SHEET NO.
(D)A2.13

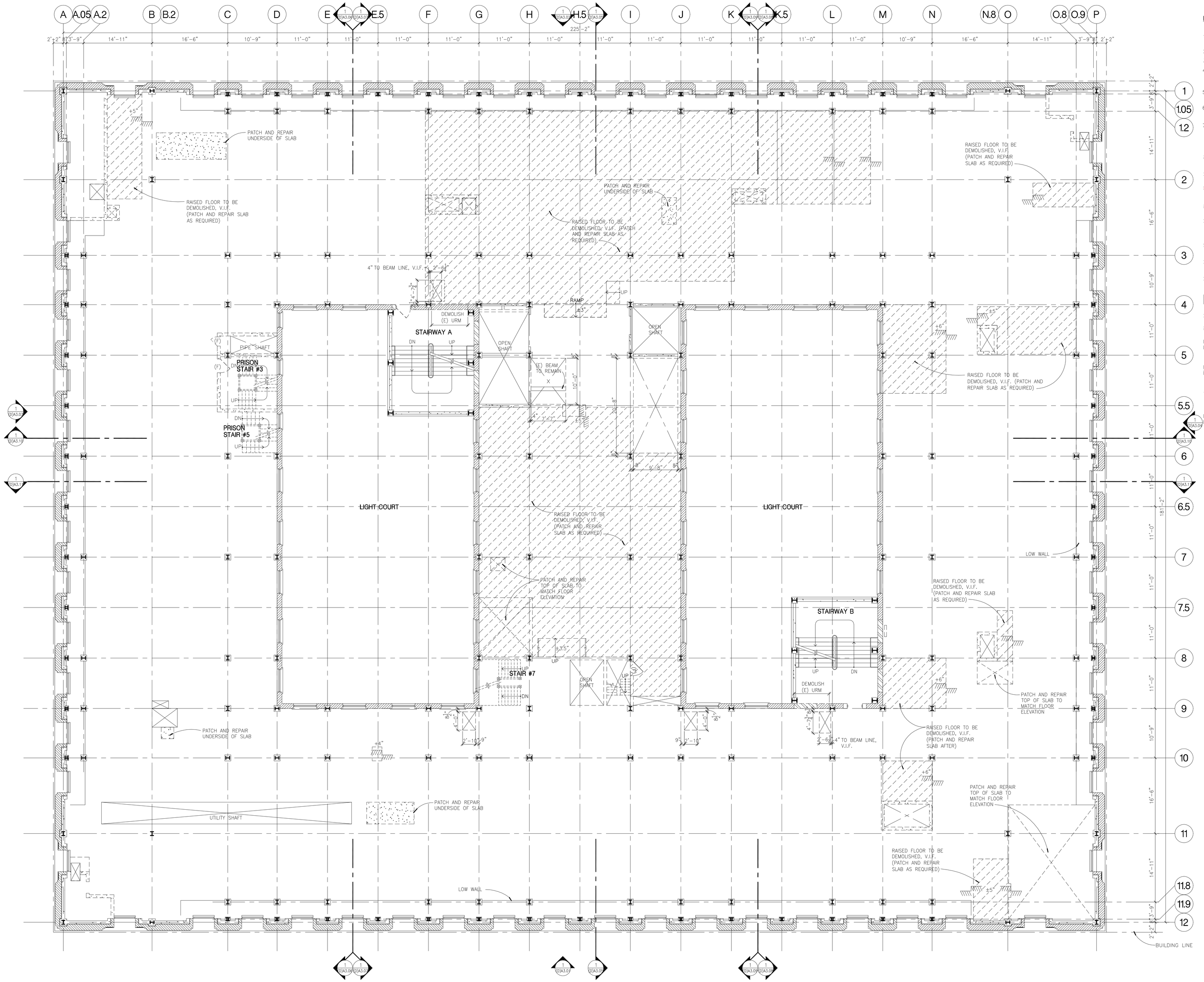

DEMOLITION NOTES / WALL MATERIALS LEGEND

1. VERIFY ALL EXISTING MATERIALS, DIMENSIONS, FLOOR ELEVATIONS, AND BUILDING CONDITIONS.
2. ALL STAIRS TO REMAIN EXCEPT AS INDICATED DASHED.
3. PROVIDE NEW OPENINGS IN EXISTING SLABS.
4. NOTES & SYMBOLS INDICATED APPLY TO THE GENERAL PROJECT. ALL NOTES DO NOT NECESSARILY APPLY TO ALL INDIVIDUAL SHEETS.
5. PROVIDE BARRIER IN ACCORDANCE WITH OSHA STANDARDS AT GRADE CHANGES & SLAB OPENINGS.
6. LEVEL CONCRETE SLAB FOR APPLICATION OF NEW ROOF IN ACCORDANCE WITH MANUFACTURE'S RECOMMENDATIONS.
7. REMOVE ALL MORTAR, METAL TIES, WOOD AND OTHER MATERIALS THAT PROJECTS BEYOND THE FACE OF THE URM AT HISTORIC STAIR AND LIGHTCOURT URM WALLS. SURFACE OF URM SHALL BE SMOOTH FOR INSTALLATION OF FIBER WRAP AND/OR STRONG BACKS.

- EXISTING STONE / TERRA-COTTA / MASONRY WITH OR WITHOUT STONE BASE TO REMAIN
- EXISTING CONCRETE WALL / COLUMN TO REMAIN
- EXISTING HOLLOW CLAY TILE PARTITION WITH STONE SURFACE TO REMAIN
- CONCRETE BLOCK WALL TO REMAIN
- PLASTER WITH OR WITHOUT MARBLE BASE AND/OR CERAMIC TILE ON HOLLOW CLAY TILE (HCT) FURRING OR PARTITION TO REMAIN.
- HOLLOW CLAY TILE PARTITION WITH PLASTER AND STONE BASE TO REMAIN
- HOLLOW CLAY TILE / UNREINFORCED MASONRY WITH NO FINISH TO REMAIN
- PLASTER / GYPSUM BOARD ON METAL STUD PARTITION OR FURRING TO REMAIN
- EXISTING OPENING IN FLOOR SLAB MAINTAIN BARRIER PER OSHA STANDARDS.
- CONCRETE WALL / TO BE DEMOLISHED
- CONCRETE BLOCK WALL TO BE DEMOLISHED
- PROVIDE NEW OPENING IN EXISTING FLOOR SLAB – PROVIDE BARRIER IN ACCORDANCE WITH OSHA STANDARDS
- RAISED FLOOR / CONCRETE PAD TO BE DEMOLISHED TO MATCH EXISTING SURROUNDING FLOOR ELEVATION. PATCH AND REPAIR FLOOR AS REQUIRED
- REMOVE PLYWOOD BOARDS FROM WINDOWS FOR INSTALLATION OF NEW WINDOW AND REHABILITATION OF EXISTING WINDOWS WHICH ARE TO REMAIN.
- DETERIORATED SLAB TO BE REMOVED AND REPLACED IN KIND. COLUMNS AND BEAMS TO REMAIN INTACT

NADEL Architects Inc.
1990 So. Bundy Dr.
Fourth Floor
Los Angeles, CA 90025
T. 310.826.2100
F. 310.826.0182
www.nadelarc.com

CONSULTANT

COUNTY OF LOS ANGELES
THE HALL OF JUSTICE
STRUCTURAL RETROFIT PHASE

REVISIONS

DRAWING TITLE

DEMOLITION FOURTEENTH FLOOR PLAN

SCOPING DOCUMENTS 100% SUBMISSION AUGUST 2010

SCALE : 1/8"=1'-0"
DATE :
JOB NO :
SHEET NO.
(D)A2.14

4' 8' 0' 2' 6' 16' N

DEMOLITION FOURTEENTH FLOOR PLAN | SCALE: 1/8"=1'-0" | 1

ALL DRAWINGS AND WRITTEN MATERIAL APPEARING HEREIN CONSTITUTE THE ORIGINAL AND UNPUBLISHED WORK OF THE ARCHITECT AND THE SAME MAY NOT BE DUPLICATED, USED OR DISCLOSED WITHOUT THE WRITTEN CONSENT OF THE ARCHITECT. COPYRIGHT: NADEL ARCHITECTS INC. ALL RIGHTS RESERVED.

ALL DRAWINGS AND WRITTEN MATERIAL APPEARING HEREIN CONSTITUTE THE ORIGINAL AND UNPUBLISHED WORK OF THE ARCHITECT AND THE SAME MAY NOT BE DUPLICATED, USED OR DISCLOSED WITHOUT THE WRITTEN CONSENT OF THE ARCHITECT. COPYRIGHT: NADEL ARCHITECTS INC. ALL RIGHTS RESERVED.

DEMOLITION PENTHOUSE FLOOR PLAN

1 — SCALE: 1/8"=1'-0"

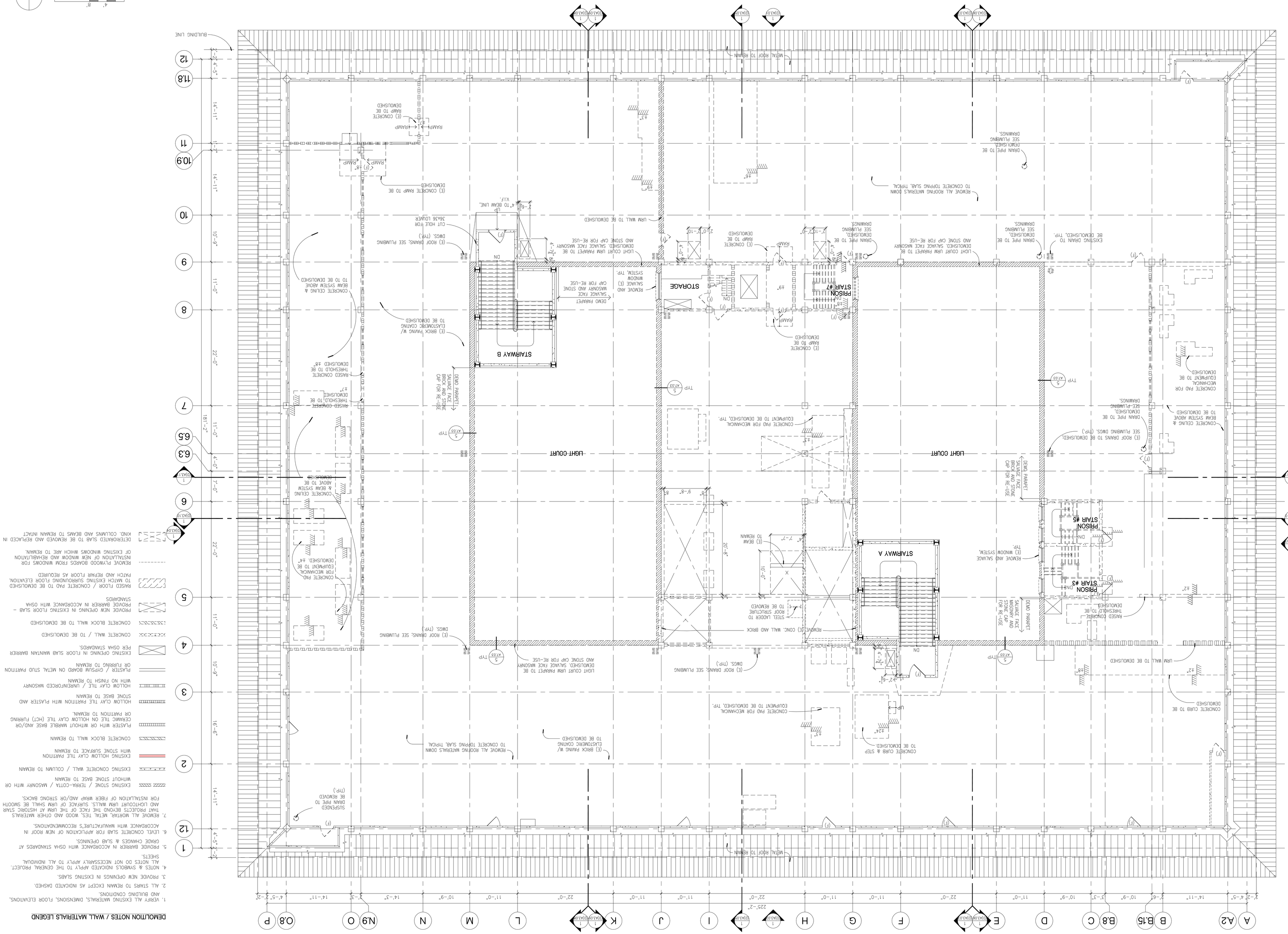
N
0' 2' 4' 8' 16'
BUILDING LINE
METAL ROOF TO REMAIN
REMOVE ALL ROOFING MATERIALS DOWN TO CONCRETE TOPPING SLAB, TYPICAL
DRAIN PIPE TO BE DEMOLISHED. SEE PLUMBING DRAWINGS.
(E) CONCRETE RAMP TO BE DEMOLISHED
RAMP
(E) CONCRETE RAMP TO BE DEMOLISHED
LIGHT COURT
STAIRWAY B
STAIRWAY A
STORAGE
PRISON STAIR #7
PRISON STAIR #3
PRISON STAIR #5
LIGHT COURT ABOVE PARAPET TO BE DEMOLISHED. SALVAGE FACE MASONRY AND STONE CAP FOR RE-USE
EXISTING DRAIN TO BE DEMOLISHED. TYP.
DRAIN PIPE TO BE DEMOLISHED. SEE PLUMBING DRAWINGS.
CONCRETE PAD FOR MECHANICAL EQUIPMENT TO BE DEMOLISHED
CONCRETE CURB & STEP TO BE DEMOLISHED.
CONCRETE CURB TO BE DEMOLISHED
(E) ROOF DRAINS (TYP.) SEE PLUMBING DRAWINGS, SEE PLUMBING
(E) ROOF DRAINS TO BE DEMOLISHED (TYP.) SEE PLUMBING DRAWINGS, SEE PLUMBING
(E) ROOF DRAINS, SEE PLUMBING DWGS. (TYP.)
(E) BRICK PAVING W/ ELASTOMERIC COATING TO BE DEMOLISHED
(E) BEAM TO REMAIN
(E) WINDOW SYSTEM, TYP. REMOVE AND SALVAGE
STEEL LADDER TO ROOF STRUCTURE TO BE REMOVED
REMOVE (E) CONC. WALL AND BRICK
REMOVE ALL ROOFING MATERIALS DOWN TO CONCRETE TOPPING SLAB, TYPICAL
DEMO PARAPET SALVAGE FACE BRICK AND STONE CAP FOR RE-USE
DEMO PARAPET SALVAGE FACE MASONRY AND STONE CAP FOR RE-USE
RAISED CONCRETE THRESHOLD TO BE DEMOLISHED
RAISED CONCRETE THRESHOLD TO BE DEMOLISHED
CONCRETE CEILING & BEAM SYSTEM ABOVE TO BE DEMOLISHED
CONCRETE CEILING & BEAM SYSTEM ABOVE TO BE DEMOLISHED
CONCRETE PAD FOR MECHANICAL EQUIPMENT TO BE DEMOLISHED. TYP.
CONCRETE PAD FOR MECHANICAL EQUIPMENT TO BE DEMOLISHED
DRAIN PIPE TO BE DEMOLISHED. SEE PLUMBING DRAWINGS.
(E) ROOF DRAINS TO BE DEMOLISHED (TYP.) SEE PLUMBING DWGS.
(E) BRICK PARAPET TO BE DEMOLISHED
(E) BRICK PARAPET TO BE DEMOLISHED
(E) BRICK PAVING W/ ELASTOMERIC COATING TO BE DEMOLISHED
(E) BRICK PAVING W/ ELASTOMERIC COATING TO BE DEMOLISHED
LIGHT COURT ABOVE PARAPET TO BE DEMOLISHED. SALVAGE FACE MASONRY AND STONE CAP FOR RE-USE
LIGHT COURT ABOVE PARAPET TO BE DEMOLISHED. SALVAGE FACE MASONRY AND STONE CAP FOR RE-USE
REMOVE MASONRY AND STONE (E) WINDOW SYSTEM. TYP.
DEMO PARAPET SALVAGE FACE BRICK AND STONE CAP FOR RE-USE
DEMO PARAPET SALVAGE FACE BRICK AND STONE CAP FOR RE-USE
SUSPENDED DRAIN PIPE TO BE REMOVED (TYP.)
CONCRETE PAD FOR MECHANICAL EQUIPMENT TO BE DEMOLISHED. TYP.
CONCRETE PAD FOR MECHANICAL EQUIPMENT TO BE DEMOLISHED
CONCRETE CEILING & BEAM SYSTEM ABOVE TO BE DEMOLISHED
CONCRETE CEILING & BEAM SYSTEM ABOVE TO BE DEMOLISHED
(E) BRICK PARAPET TO BE DEMOLISHED
(E) BRICK PARAPET TO BE DEMOLISHED
(E) BRICK PAVING W/ ELASTOMERIC COATING TO BE DEMOLISHED
(E) BRICK PAVING W/ ELASTOMERIC COATING TO BE DEMOLISHED
LIGHT COURT ABOVE PARAPET TO BE DEMOLISHED. SALVAGE FACE MASONRY AND STONE CAP FOR RE-USE
LIGHT COURT ABOVE PARAPET TO BE DEMOLISHED. SALVAGE FACE MASONRY AND STONE CAP FOR RE-USE
REMOVE MASONRY AND STONE (E) WINDOW SYSTEM. TYP.
DEMO PARAPET SALVAGE FACE BRICK AND STONE CAP FOR RE-USE
DEMO PARAPET SALVAGE FACE BRICK AND STONE CAP FOR RE-USE
RAISED CONCRETE THRESHOLD TO BE DEMOLISHED
RAISED CONCRETE THRESHOLD TO BE DEMOLISHED
CONCRETE CEILING & BEAM SYSTEM ABOVE TO BE DEMOLISHED
CONCRETE CEILING & BEAM SYSTEM ABOVE TO BE DEMOLISHED
CONCRETE PAD FOR MECHANICAL EQUIPMENT TO BE DEMOLISHED. TYP.
CONCRETE PAD FOR MECHANICAL EQUIPMENT TO BE DEMOLISHED
DRAIN PIPE TO BE DEMOLISHED. SEE PLUMBING DRAWINGS.
(E) ROOF DRAINS TO BE DEMOLISHED (TYP.) SEE PLUMBING DWGS.

ALL DRAWINGS AND WRITTEN MATERIAL APPEARING HEREIN CONSTITUTE THE ORIGINAL AND UNPUBLISHED WORK OF THE ARCHITECT AND THE SAME MAY NOT BE DUPLICATED, USED OR DISCLOSED WITHOUT THE WRITTEN CONSENT OF THE ARCHITECT. COPYRIGHT: NADEL ARCHITECTS INC. ALL RIGHTS RESERVED.

EXISTING ROOF PLAN

SCALE: 1/8"=1'-0" — 1

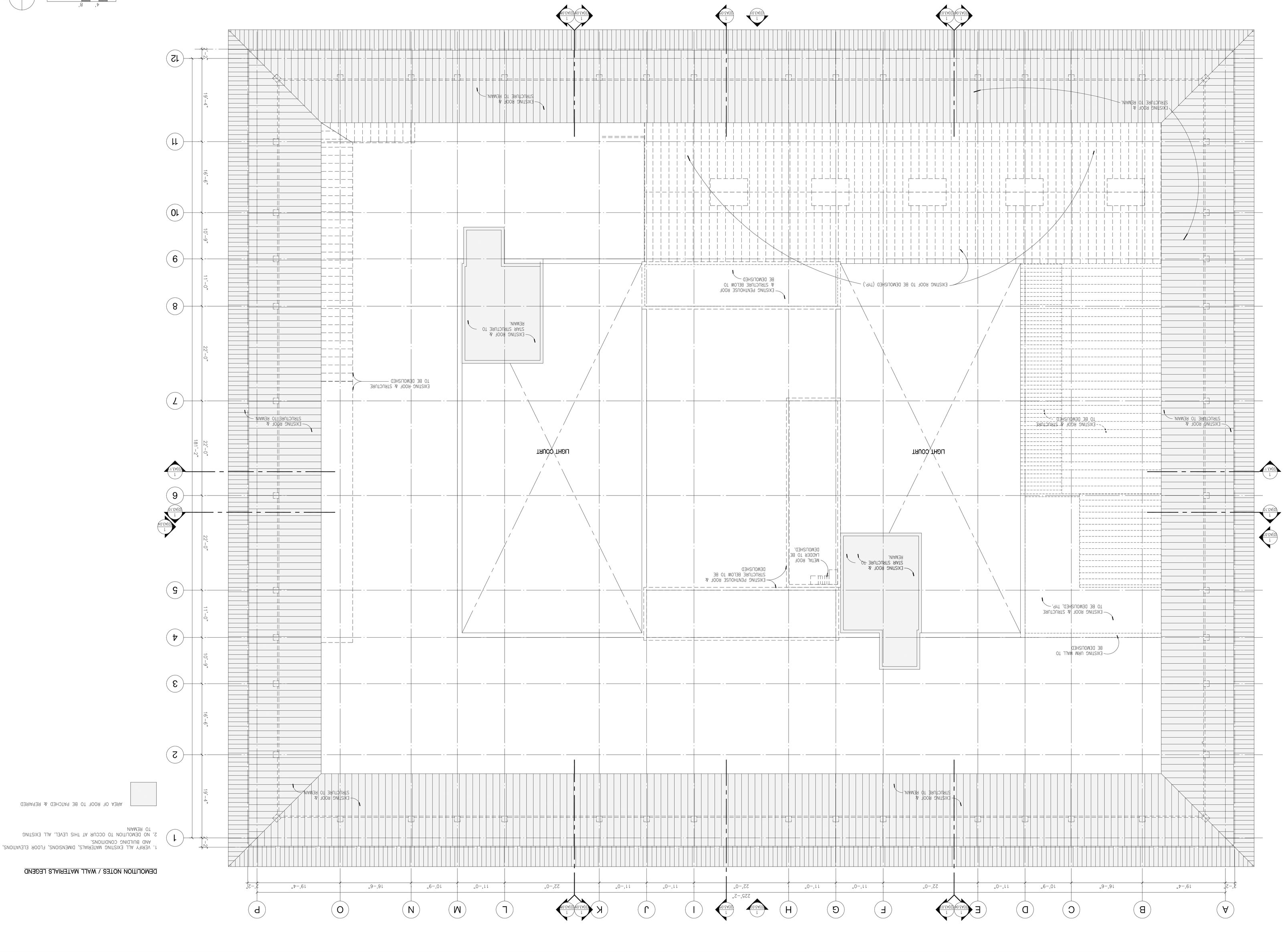

DEMOLITION NOTES / WALL MATERIALS LEGEND

1. VERIFY ALL EXISTING MATERIALS, DIMENSIONS, FLOOR ELEVATIONS, AND BUILDING CONDITIONS.
2. NO DEMOLITION TO OCCUR AT THIS LEVEL. ALL EXISTING TO REMAIN

AREA OF ROOF TO BE PATCHED & REPAIRED

NADEL Architects Inc.
1990 So. Bundy Dr.
Fourth Floor
Los Angeles, CA 90025
T. 310.826.2100
F. 310.826.0182
www.nadelarc.com

CONSULTANT

DRAWING TITLE

REVISIONS

DEMOLITION ROOF PLAN

COUNTY OF LOS ANGELES
THE HALL OF JUSTICE
STRUCTURAL RETROFIT PHASE

SCOPING DOCUMENTS 100% SUBMISSION AUGUST 2010

SCALE : 1/8"=1'-0"
DATE :
JOB NO :
SHEET NO.

(D)A2.16

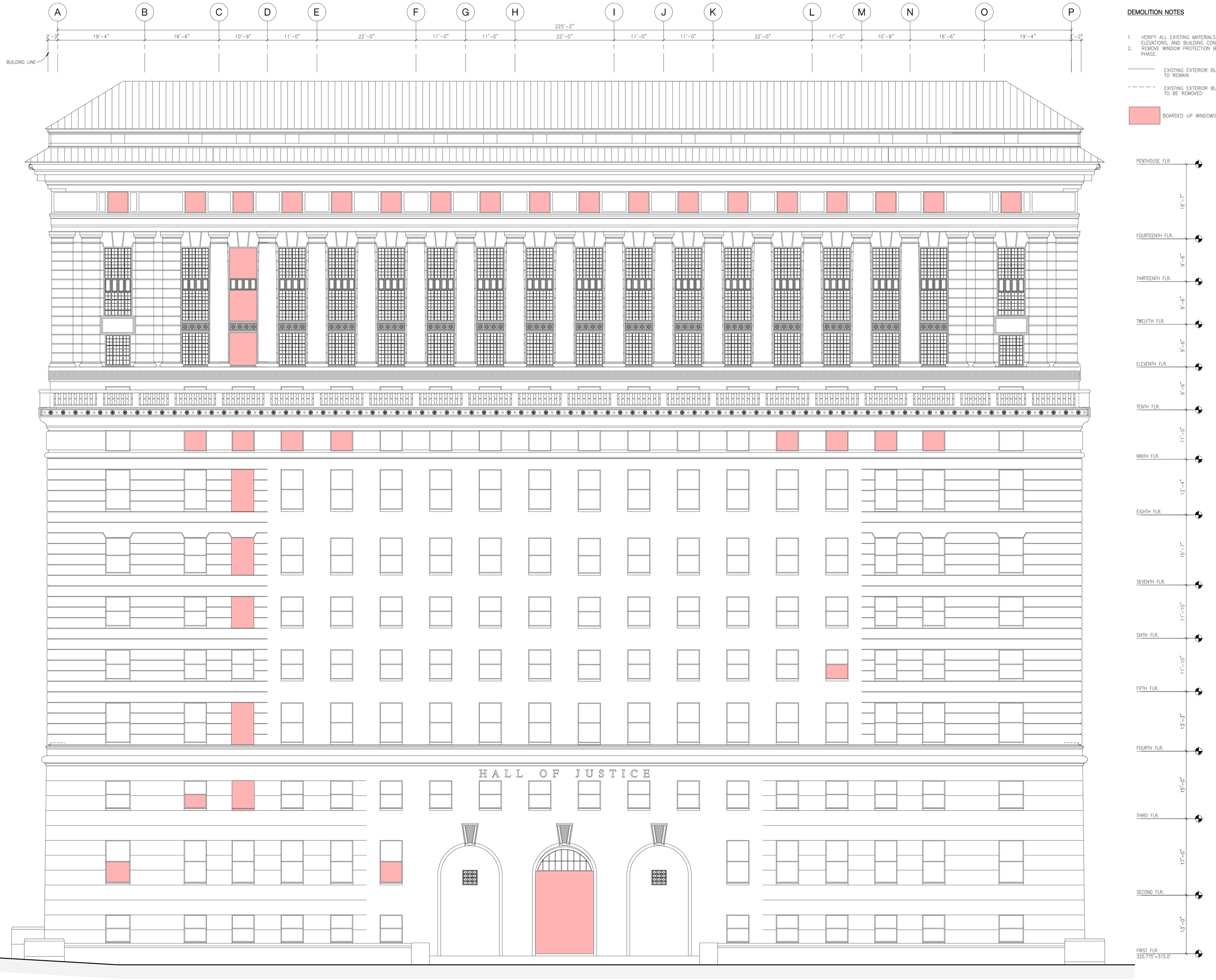

DEMOLITION NOTES

1. VERIFY ALL EXISTING MATERIALS, DIMENSIONS, FLOOR ELEVATIONS, AND BUILDING CONDITIONS.
2. REMOVE WINDOW PROTECTION BOARDS INSTALLED IN SOFT DEMO PHASE.

EXISTING EXTERIOR BUILDING ELEMENTS TO REMAIN

EXISTING EXTERIOR BUILDING ELEMENTS TO BE REMOVED

BOARDED UP WINDOWS/DOOR

DEMOLITION BUILDING ELEVATION (EAST / SPRING STREET)

SCALE: 1/8"=1'-0"

1

NADEL
Architects Inc.

1990 So. Bundy Dr.
Fourth Floor
Los Angeles, CA 90025

T. 310.826.2100
F. 310.826.0182

www.nadelarc.com

CONSULTANT

COUNTY OF LOS ANGELES
THE HALL OF JUSTICE
STRUCTURAL RETROFIT PHASE

REVISIONS

DRAWING TITLE

DEMOLITION BUILDING ELEVATION (EAST)

SCALE : 1/8"=1'-0"
DATE :
JOB NO :
SHEET NO.

(D)A3.01

SCOPING DOCUMENTS 100% SUBMISSION AUGUST 2010

ALL DRAWINGS AND WRITTEN MATERIAL APPEARING HEREIN CONSTITUTE THE ORIGINAL AND UNPUBLISHED WORK OF THE ARCHITECT AND THE SAME MAY NOT BE DUPLICATED, USED OR DISCLOSED WITHOUT THE WRITTEN CONSENT OF THE ARCHITECT. COPYRIGHT. NADEL ARCHITECTS INC. ALL RIGHTS RESERVED.

DEMOLITION NOTES

1. VERIFY ALL EXISTING MATERIALS, DIMENSIONS, FLOOR ELEVATIONS, AND BUILDING CONDITIONS.
2. REMOVE WINDOW PROTECTION BOARDS INSTALLED IN SOFT DEMO PHASE.

EXISTING EXTERIOR BUILDING ELEMENTS TO REMAIN

EXISTING EXTERIOR BUILDING ELEMENTS TO BE REMOVED

BOARDED UP WINDOWS/DOOR

DEMOLITION BUILDING ELEVATION (WEST / BROADWAY STREET)

SCALE: 1/8"=1'-0"

1

NADEL
Architects Inc.

1990 So. Bundy Dr.
Fourth Floor
Los Angeles, CA 90025

T. 310.826.2100
F. 310.826.0182

www.nadelarc.com

CONSULTANT

COUNTY OF LOS ANGELES
THE HALL OF JUSTICE
STRUCTURAL RETROFIT PHASE

REVISIONS

DRAWING TITLE

DEMOLITION
BUILDING ELEVATION (WEST)

SCOPING DOCUMENTS 100% SUBMISSION AUGUST 2010

SCALE : 1/8"=1'-0"
DATE :
JOB NO :
SHEET NO.

(D)A3.02

ALL DRAWINGS AND WRITTEN MATERIAL APPEARING HEREIN CONSTITUTE THE ORIGINAL AND UNPUBLISHED WORK OF THE ARCHITECT AND THE SAME MAY NOT BE DUPLICATED, USED OR DISCLOSED WITHOUT THE WRITTEN CONSENT OF THE ARCHITECT. COPYRIGHT. NADEL ARCHITECTS INC. ALL RIGHTS RESERVED.

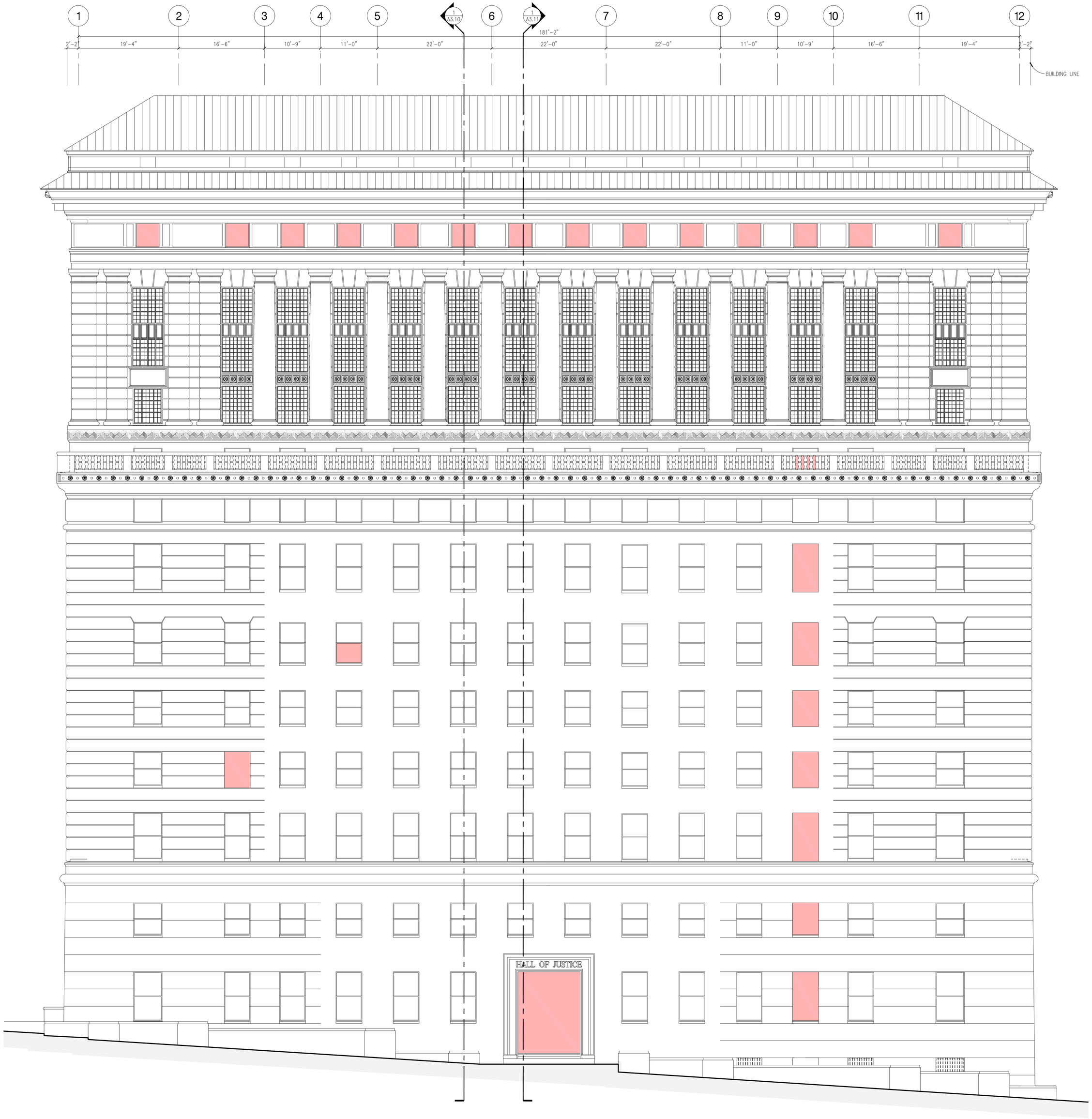

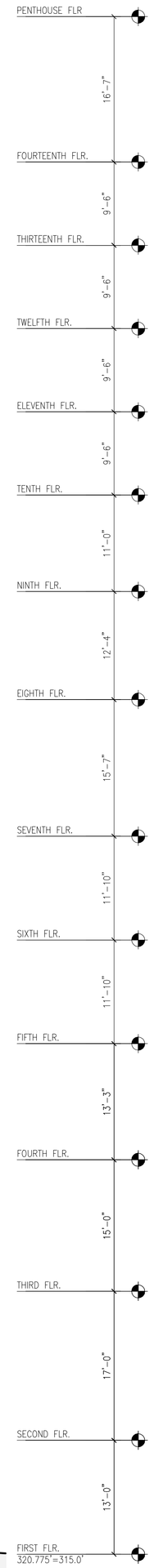

DEMOLITION NOTES

1. VERIFY ALL EXISTING MATERIALS, DIMENSIONS, FLOOR ELEVATIONS, AND BUILDING CONDITIONS.
2. REMOVE WINDOW PROTECTION BOARDS INSTALLED IN SOFT DEMO PHASE.

EXISTING EXTERIOR BUILDING ELEMENTS TO REMAIN

EXISTING EXTERIOR BUILDING ELEMENTS TO BE REMOVED

BOARDED UP WINDOWS/DOOR

DEMOLITION BUILDING ELEVATION (SOUTH / TEMPLE STREET)

SCALE: 1/8"=1'-0"

1

NADEL
Architects Inc.

1990 So. Bundy Dr.
Fourth Floor
Los Angeles, CA 90025

T. 310.826.2100
F. 310.826.0182

www.nadelarc.com

CONSULTANT

COUNTY OF LOS ANGELES
THE HALL OF JUSTICE
STRUCTURAL RETROFIT PHASE

REVISIONS

1	
2	
3	
4	
5	
6	

DRAWING TITLE

DEMOLITION BUILDING ELEVATION (SOUTH)

SCOPING DOCUMENTS 100% SUBMISSION AUGUST 2010

SCALE : 1/8"=1'-0"
DATE :
JOB NO :
SHEET NO.

(D)A3.03

ALL DRAWINGS AND WRITTEN MATERIAL APPEARING HEREIN CONSTITUTE THE ORIGINAL AND UNPUBLISHED WORK OF THE ARCHITECT AND THE SAME MAY NOT BE DUPLICATED, USED OR DISCLOSED WITHOUT THE WRITTEN CONSENT OF THE ARCHITECT. COPYRIGHT. NADEL ARCHITECTS INC. ALL RIGHTS RESERVED.

DEMOLITION NOTES

1. VERIFY ALL EXISTING MATERIALS, DIMENSIONS, FLOOR ELEVATIONS, AND BUILDING CONDITIONS.
2. REMOVE WINDOW PROTECTION BOARDS INSTALLED IN SOFT DEMO PHASE.

EXISTING EXTERIOR BUILDING ELEMENTS TO REMAIN

EXISTING EXTERIOR BUILDING ELEMENTS TO BE REMOVED

BOARDED UP WINDOWS/DOOR

DEMOLITION BUILDING ELEVATION (NORTH / ALISO STREET)

SCALE: 1/8"=1'-0"

1

NADEL
Architects Inc.

1990 So. Bundy Dr.
Fourth Floor
Los Angeles, CA 90025

T. 310.826.2100
F. 310.826.0182

www.nadelarc.com

CONSULTANT

COUNTY OF LOS ANGELES
THE HALL OF JUSTICE
STRUCTURAL RETROFIT PHASE

REVISIONS

1	
2	
3	
4	
5	
6	

DRAWING TITLE

DEMOLITION BUILDING ELEVATION (NORTH)

SCOPING DOCUMENTS 100% SUBMISSION AUGUST 2010

SCALE : 1/8"=1'-0"
DATE :
JOB NO :
SHEET NO.

(D)A3.04

ALL DRAWINGS AND WRITTEN MATERIAL APPEARING HEREIN CONSTITUTE THE ORIGINAL AND UNPUBLISHED WORK OF THE ARCHITECT AND THE SAME MAY NOT BE DUPLICATED, USED OR DISCLOSED WITHOUT THE WRITTEN CONSENT OF THE ARCHITECT. COPYRIGHT: NADEL ARCHITECTS INC. ALL RIGHTS RESERVED.

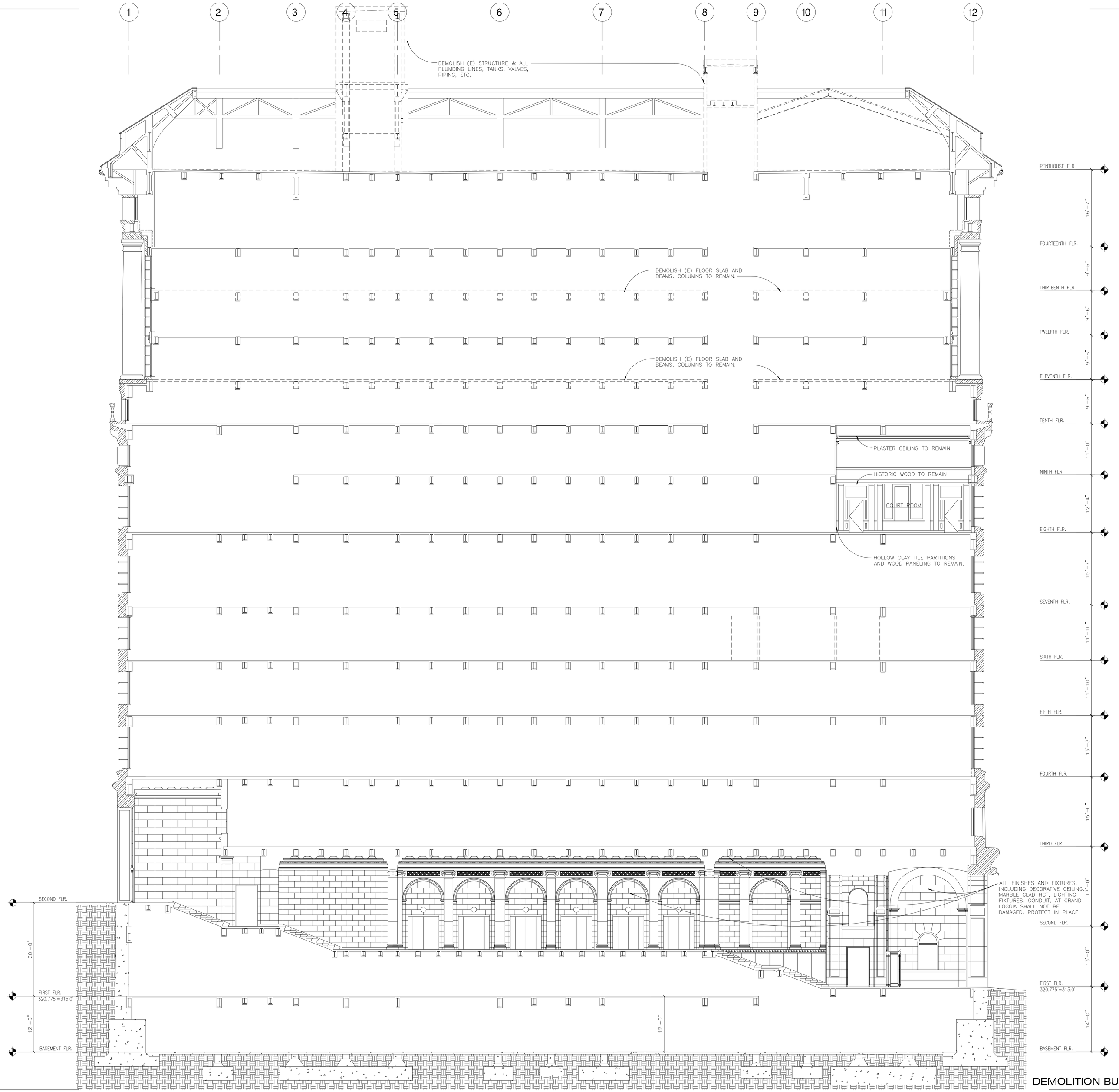

DEMOLITION NOTES

1. VERIFY ALL EXISTING MATERIALS, DIMENSIONS, FLOOR ELEVATIONS, AND BUILDING CONDITIONS.
2. REMOVE ALL A/C UNITS, DUCTS, WINDOW SCREENS, AND BARS. WINDOW TO REMAIN.

——— TO REMAIN

– – – – TO BE DEMOLISHED & REMOVED

TO BE DEMOLISHED & REMOVED UNLESS NOTED OTHERWISE. NOTE: LIGHT COURT URM TO BE SALVAGED FOR CONSTRUCTION OF NEW PARAPET

DEMOLITION BUILDING SECTION (1) | SCALE: 1/8"=1'-0" | 1

NADEL
Architects Inc.

1990 So. Bundy Dr.
Fourth Floor
Los Angeles, CA 90025

T. 310.826.2100
F. 310.826.0182

www.nadelarc.com

CONSULTANT

COUNTY OF LOS ANGELES
THE HALL OF JUSTICE
STRUCTURAL RETROFIT PHASE

REVISIONS

2	4-01-06

DRAWING TITLE

DEMOLITION BUILDING SECTION (1)

SCALE : 1/8"=1'-0"
DATE :
JOB NO :
SHEET NO.

(D)A3.05

SCOPING DOCUMENTS 100% SUBMISSION AUGUST 2010

ALL DRAWINGS AND WRITTEN MATERIAL APPEARING HEREIN CONSTITUTE THE ORIGINAL AND UNPUBLISHED WORK OF THE ARCHITECT AND THE SAME MAY NOT BE DUPLICATED, USED OR DISCLOSED WITHOUT THE WRITTEN CONSENT OF THE ARCHITECT. COPYRIGHT: NADEL ARCHITECTS INC. ALL RIGHTS RESERVED.

ALL DRAWINGS AND MATTER MATERIAL APPEARING HEREIN CONSTITUTE THE ORIGINAL AND UNPUBLISHED WORK OF THE ARCHITECT AND THE SAME MAY NOT BE DUPLICATED, USED OR DISCLOSED WITHOUT THE WRITTEN CONSENT OF THE ARCHITECT. COPYRIGHT: NADEL ARCHITECTS INC. ALL RIGHTS RESERVED.

DEMOLITION BUILDING SECTION (2)

SCALE: 1/8"=1'-0" | 1

DEMOLITION NOTES

1. VERIFY ALL EXISTING MATERIALS, DIMENSIONS, FLOOR ELEVATIONS, AND BUILDING CONDITIONS.
2. REMOVE ALL A/C UNITS, DUCTS, WINDOW SCREENS, AND BARS. WINDOW TO REMAIN.

TO REMAIN

TO BE DEMOLISHED & REMOVED

TO BE DEMOLISHED & REMOVED UNLESS NOTED OTHERWISE. NOTE: LIGHT COURT URM TO BE SALVAGED FOR CONSTRUCTION OF NEW PARAPET

SCOPING DOCUMENTS 100% SUBMISSION AUGUST 2010

DRAWING TITLE

DEMOLITION BUILDING SECTION (2)

SCALE : 1/8"=1'-0"
DATE :
JOB NO :
SHEET NO. **(D)A3.06**

REVISIONS

COUNTY OF LOS ANGELES

THE HALL OF JUSTICE

STRUCTURAL RETROFIT PHASE

CONSULTANT

NADEL Architects Inc.
1990 So. Bundy Dr.
Fourth Floor
Los Angeles, CA 90025
T. 310.826.2100
F. 310.826.0182
www.nadelarc.com

ALL DRAWINGS AND MATERIAL APPEARING HEREIN CONSTITUTE THE ORIGINAL AND UNPUBLISHED WORK OF THE ARCHITECT AND THE SAME MAY NOT BE DUPLICATED, USED OR DISCLOSED WITHOUT THE WRITTEN CONSENT OF THE ARCHITECT. COPYRIGHT: NADEL ARCHITECTS INC. ALL RIGHTS RESERVED.

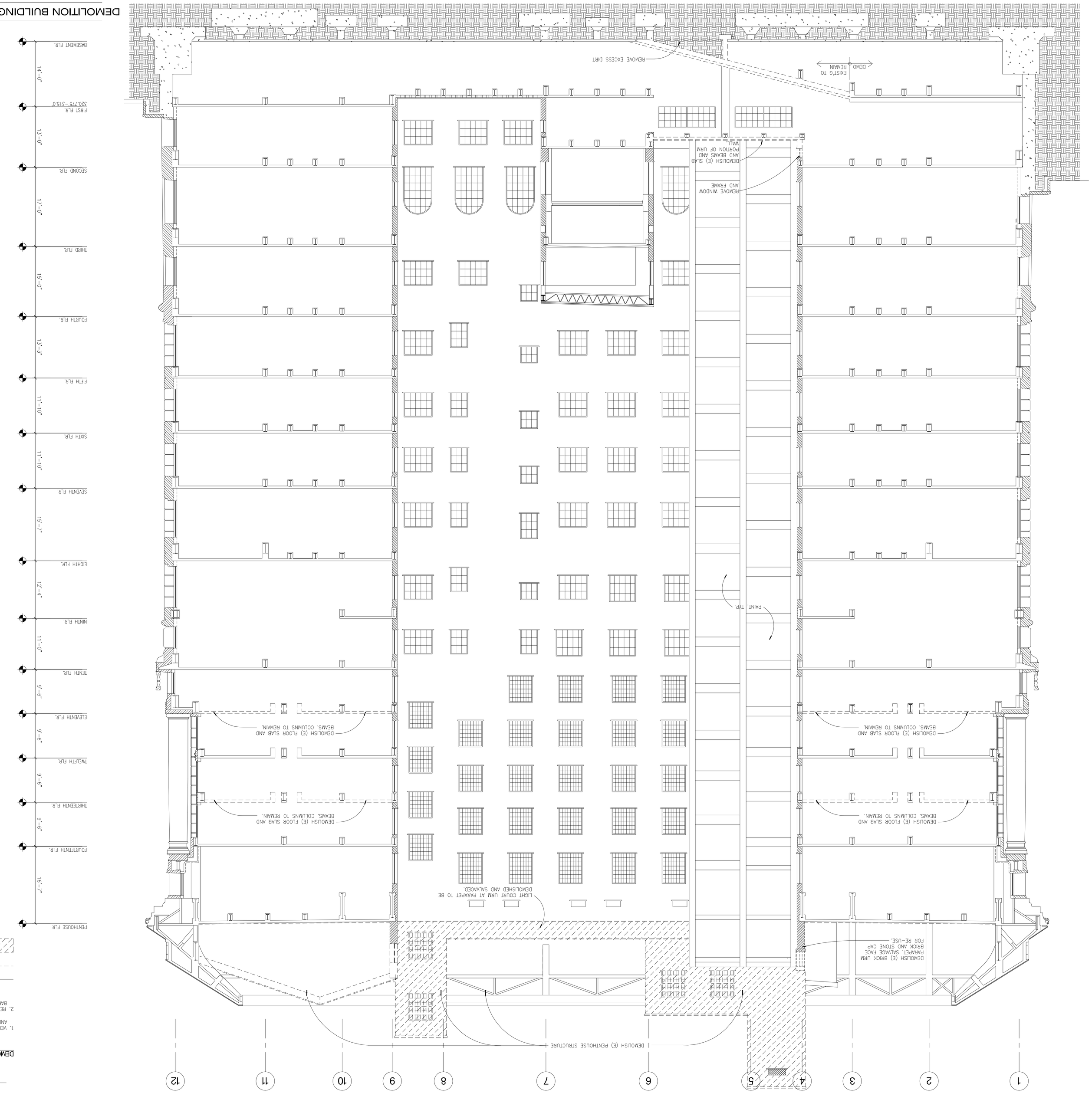

DEMOLITION BUILDING SECTION (3)

SCALE: 1/8"=1'-0" | 1

DEMOLITION NOTES

1. VERIFY ALL EXISTING MATERIALS, DIMENSIONS, FLOOR ELEVATIONS, AND BUILDING CONDITIONS.
2. REMOVE ALL A/C UNITS, DUCTS, WINDOW SCREENS, AND BARS, WINDOW TO REMAIN.

TO REMAIN

TO BE DEMOLISHED & REMOVED

TO BE DEMOLISHED & REMOVED UNLESS NOTED OTHERWISE. NOTE: LIGHT COURT URM TO BE SALVAGED FOR CONSTRUCTION OF NEW PARAPET

SCOPING DOCUMENTS 100% SUBMISSION AUGUST 2010

DEMOLITION BUILDING SECTION (3)

DRAWING TITLE

REVISIONS

CONSULTANT

NADEL Architects Inc.
1990 So. Bundy Dr.
Fourth Floor
Los Angeles, CA 90025
T. 310.826.2100
F. 310.826.0182
www.nadelarc.com

COUNTY OF LOS ANGELES

THE HALL OF JUSTICE

STRUCTURAL RETROFIT PHASE

SCALE : 1/8"=1'-0"
DATE :
JOB NO :
SHEET NO.

(D)A3.07

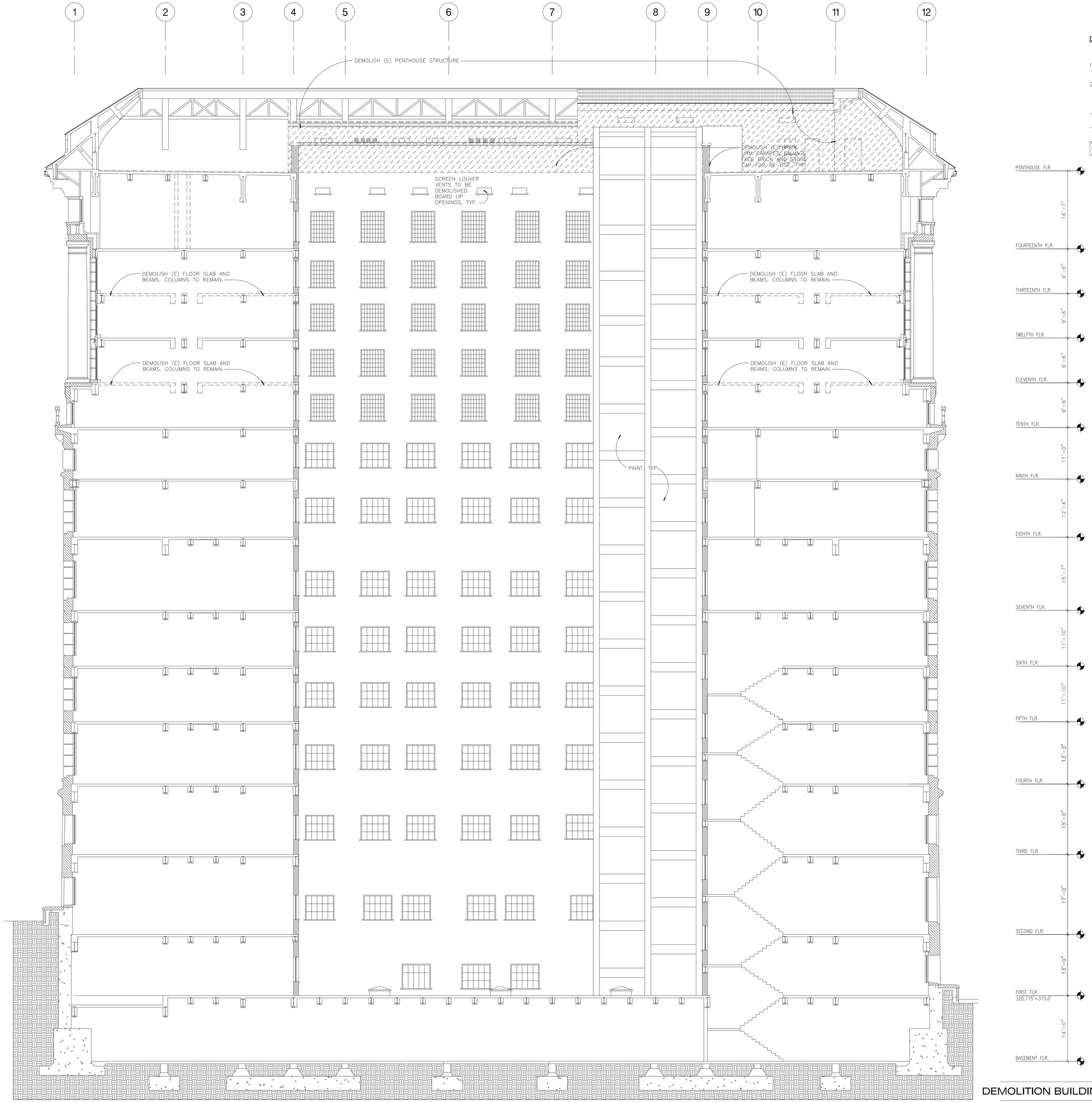

DEMOLITION BUILDING SECTION (4)

SCALE: 1/8"=1'-0"

1

DEMOLITION NOTES

1. VERIFY ALL EXISTING MATERIALS, DIMENSIONS, FLOOR ELEVATIONS, AND BUILDING CONDITIONS.
2. REMOVE ALL A/C UNITS, DUCTS, WINDOW SCREENS, AND BARS. WINDOW TO REMAIN.

TO REMAIN

TO BE DEMOLISHED & REMOVED

TO BE DEMOLISHED & REMOVED UNLESS NOTED OTHERWISE. NOTE: LIGHT COURT URM TO BE SALVAGED FOR CONSTRUCTION OF NEW PARAPET

NADEL Architects Inc.

1990 So. Bundy Dr.
Fourth Floor
Los Angeles, CA 90025

T. 310.826.2100
F. 310.826.0182

www.nadelarc.com

CONSULTANT

COUNTY OF LOS ANGELES
THE HALL OF JUSTICE
STRUCTURAL RETROFIT PHASE

REVISIONS

DRAWING TITLE

DEMOLITION BUILDING SECTION (4)

SCOPING DOCUMENTS 100% SUBMISSION AUGUST 2010

SCALE : 1/8"=1'-0"
DATE :
JOB NO :
SHEET NO.

(D)A3.08

ALL DRAWINGS AND WRITTEN MATERIAL APPEARING HEREIN CONSTITUTE THE ORIGINAL AND UNPUBLISHED WORK OF THE ARCHITECT AND THE SAME MAY NOT BE DUPLICATED, USED OR DISCLOSED WITHOUT THE WRITTEN CONSENT OF THE ARCHITECT. COPYRIGHT: NADEL ARCHITECTS INC. ALL RIGHTS RESERVED.

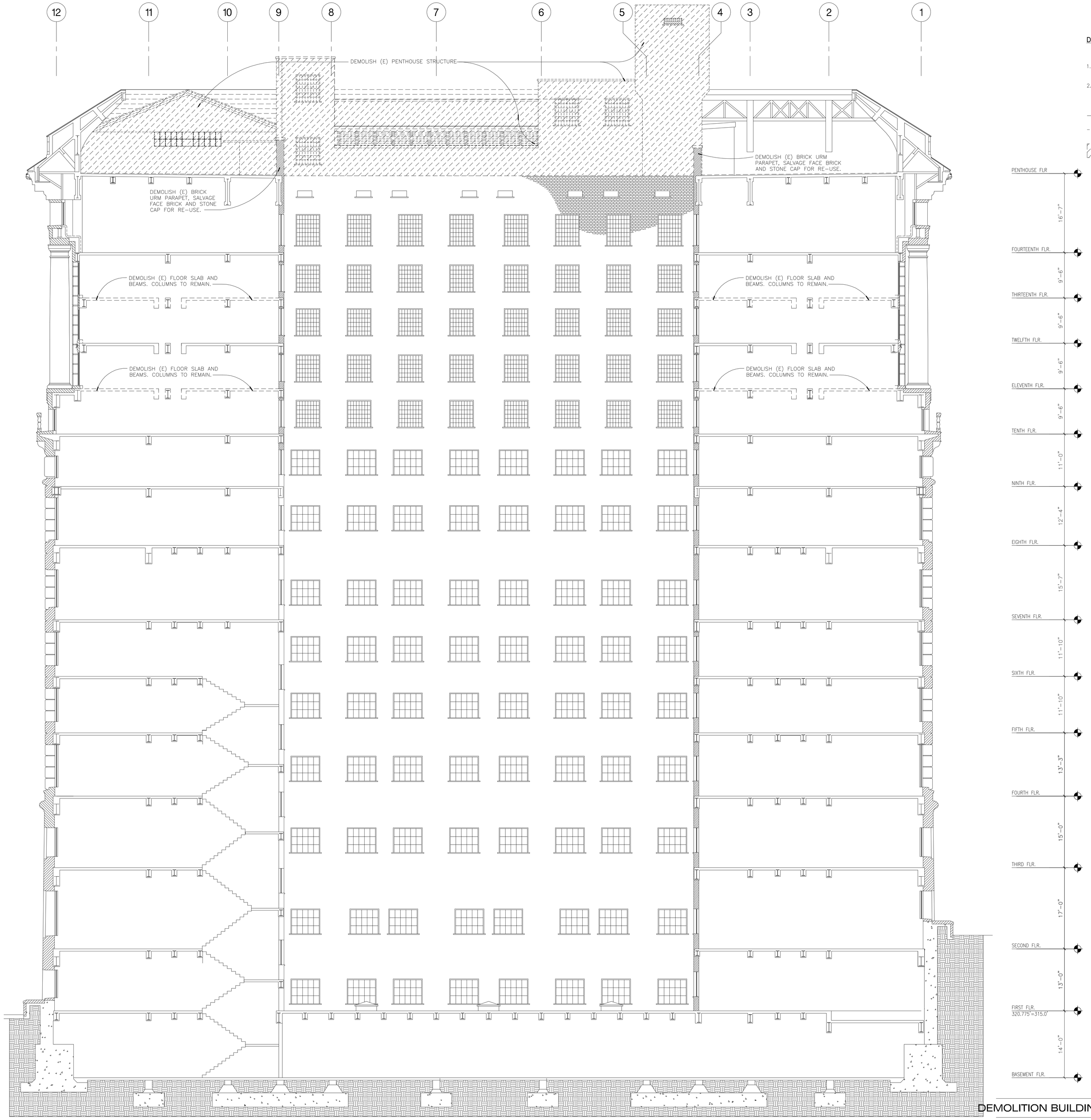

DEMOLITION BUILDING SECTION (5)

SCALE: 1/8"=1'-0"

1

DEMOLITION NOTES

1. VERIFY ALL EXISTING MATERIALS, DIMENSIONS, FLOOR ELEVATIONS, AND BUILDING CONDITIONS.
2. REMOVE ALL A/C UNITS, DUCTS, WINDOW SCREENS, AND BARS. WINDOW TO REMAIN.

TO REMAIN

TO BE DEMOLISHED & REMOVED

TO BE DEMOLISHED & REMOVED UNLESS NOTED OTHERWISE. NOTE: LIGHT COURT URM TO BE SALVAGED FOR CONSTRUCTION OF NEW PARAPET

NADEL Architects Inc.

1990 So. Bundy Dr.
Fourth Floor
Los Angeles, CA 90025

T. 310.826.2100
F. 310.826.0182

www.nadelarc.com

CONSULTANT

COUNTY OF LOS ANGELES
THE HALL OF JUSTICE
STRUCTURAL RETROFIT PHASE

REVISIONS

DRAWING TITLE

DEMOLITION BUILDING SECTION (5)

SCOPING DOCUMENTS 100% SUBMISSION AUGUST 2010

SCALE : 1/8"=1'-0"
DATE :
JOB NO :
SHEET NO.

(D)A3.09

ALL DRAWINGS AND WRITTEN MATERIAL APPEARING HEREIN CONSTITUTE THE ORIGINAL AND UNPUBLISHED WORK OF THE ARCHITECT AND THE SAME MAY NOT BE DUPLICATED, USED OR DISCLOSED WITHOUT THE WRITTEN CONSENT OF THE ARCHITECT. COPYRIGHT: NADEL ARCHITECTS INC. ALL RIGHTS RESERVED.

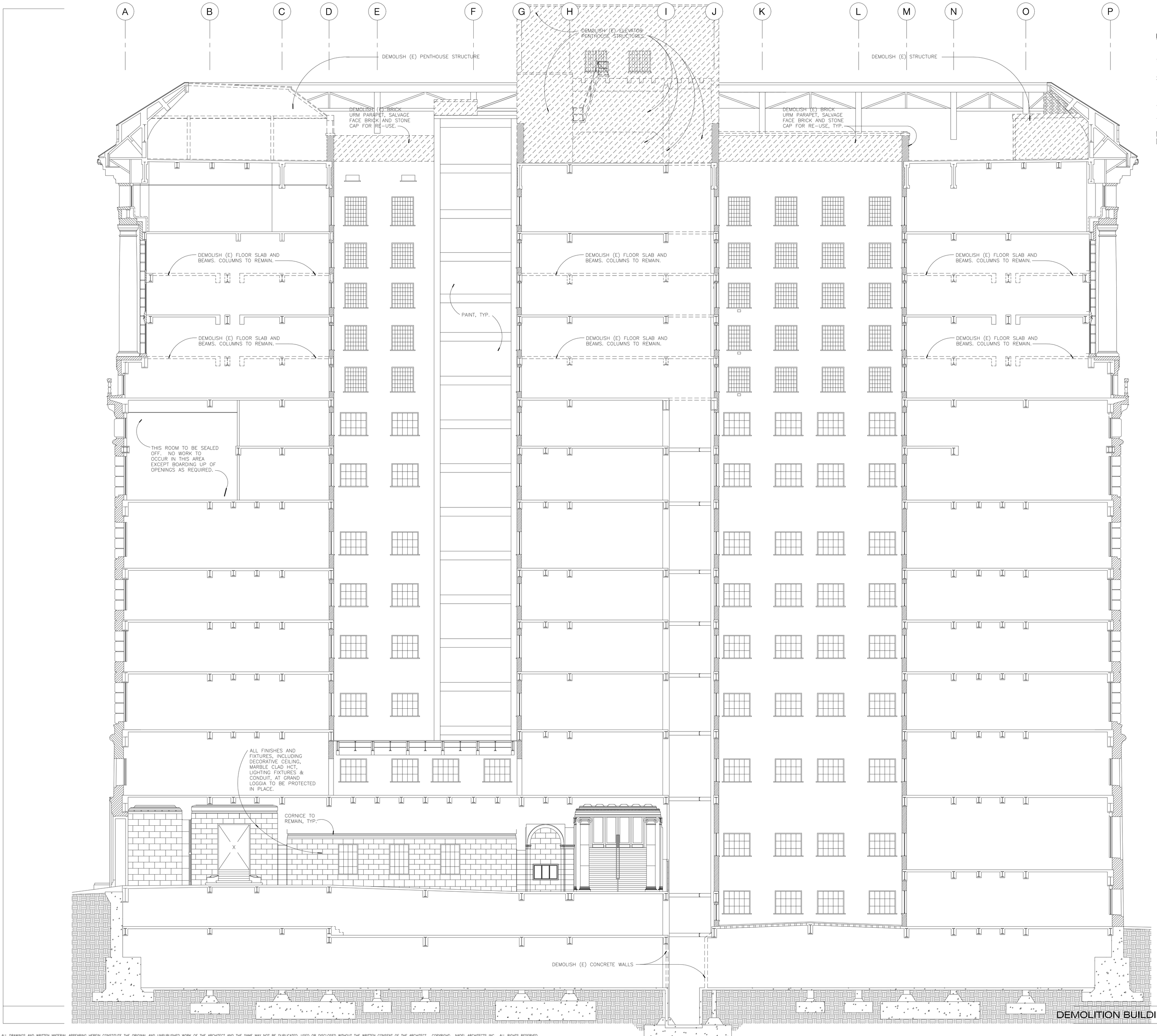

DEMOLITION NOTES

1. VERIFY ALL EXISTING MATERIALS, DIMENSIONS, FLOOR ELEVATIONS, AND BUILDING CONDITIONS.
2. REMOVE ALL A/C UNITS, DUCTS, WINDOW SCREENS, AND BARS. WINDOW TO REMAIN.

TO REMAIN

TO BE DEMOLISHED & REMOVED

TO BE DEMOLISHED & REMOVED UNLESS NOTED OTHERWISE. NOTE: LIGHT COURT URM TO BE SALVAGED FOR CONSTRUCTION OF NEW PARAPET

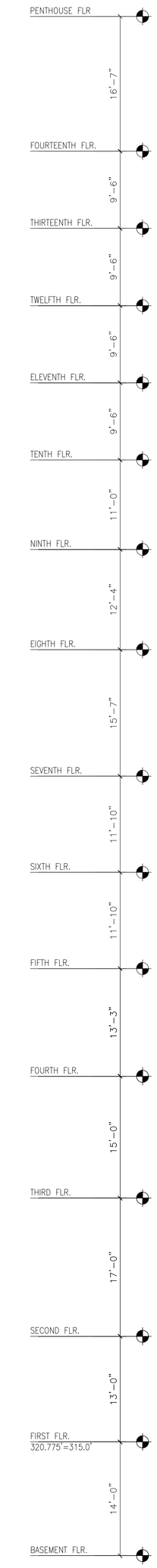

DEMOLITION BUILDING SECTION (6)

SCALE: 1/8"=1'-0"

1

NADEL Architects Inc.

1990 So. Bundy Dr.
Fourth Floor
Los Angeles, CA 90025

T. 310.826.2100
F. 310.826.0182

www.nadelarc.com

CONSULTANT

COUNTY OF LOS ANGELES
THE HALL OF JUSTICE
STRUCTURAL RETROFIT PHASE

REVISIONS

DRAWING TITLE

DEMOLITION BUILDING SECTION (6)

SCOPING DOCUMENTS 100% SUBMISSION AUGUST 2010

SCALE : 1/8"=1'-0"
DATE :
JOB NO :
SHEET NO.

(D)A3.10

ALL DRAWINGS AND WRITTEN MATERIAL APPEARING HEREIN CONSTITUTE THE ORIGINAL AND UNPUBLISHED WORK OF THE ARCHITECT AND THE SAME MAY NOT BE DUPLICATED, USED OR DISCLOSED WITHOUT THE WRITTEN CONSENT OF THE ARCHITECT. COPYRIGHT: NADEL ARCHITECTS INC. ALL RIGHTS RESERVED.

DEMOLITION NOTES

1. VERIFY ALL EXISTING MATERIALS, DIMENSIONS, FLOOR ELEVATIONS, AND BUILDING CONDITIONS.
2. REMOVE ALL A/C UNITS, DUCTS, WINDOW SCREENS, AND BARS. WINDOW TO REMAIN.

TO REMAIN

TO BE DEMOLISHED & REMOVED

TO BE DEMOLISHED & REMOVED UNLESS NOTED OTHERWISE. NOTE: LIGHT COURT URM TO BE SALVAGED FOR CONSTRUCTION OF NEW PARAPET

DEMOLITION BUILDING SECTION (7) — SCALE: 1/8"=1'-0" — 1

NADEL
Architects Inc.

1990 So. Bundy Dr.
Fourth Floor
Los Angeles, CA 90025

T. 310.826.2100
F. 310.826.0182

www.nadelarc.com

CONSULTANT

COUNTY OF LOS ANGELES
THE HALL OF JUSTICE
STRUCTURAL RETROFIT PHASE

REVISIONS

DRAWING TITLE

DEMOLITION BUILDING SECTION (7)

SCALE : 1/8"=1'-0"
DATE :
JOB NO :
SHEET NO.

(D)A3.11

SCOPING DOCUMENTS 100% SUBMISSION AUGUST 2010

ALL DRAWINGS AND WRITTEN MATERIAL APPEARING HEREIN CONSTITUTE THE ORIGINAL AND UNPUBLISHED WORK OF THE ARCHITECT AND THE SAME MAY NOT BE DUPLICATED, USED OR DISCLOSED WITHOUT THE WRITTEN CONSENT OF THE ARCHITECT. COPYRIGHT: NADEL ARCHITECTS INC. ALL RIGHTS RESERVED.

ALL DRAWINGS AND MATERIAL APPEARING HEREIN CONSTITUTE THE ORIGINAL AND UNPUBLISHED WORK OF THE ARCHITECT AND THE SAME MAY NOT BE DUPLICATED, USED OR DISCLOSED WITHOUT THE WRITTEN CONSENT OF THE ARCHITECT. COPYRIGHT: NADEL ARCHITECTS INC. ALL RIGHTS RESERVED.

BASEMENT FLOOR PLAN

SCALE: 1/8"=1'-0" | 1

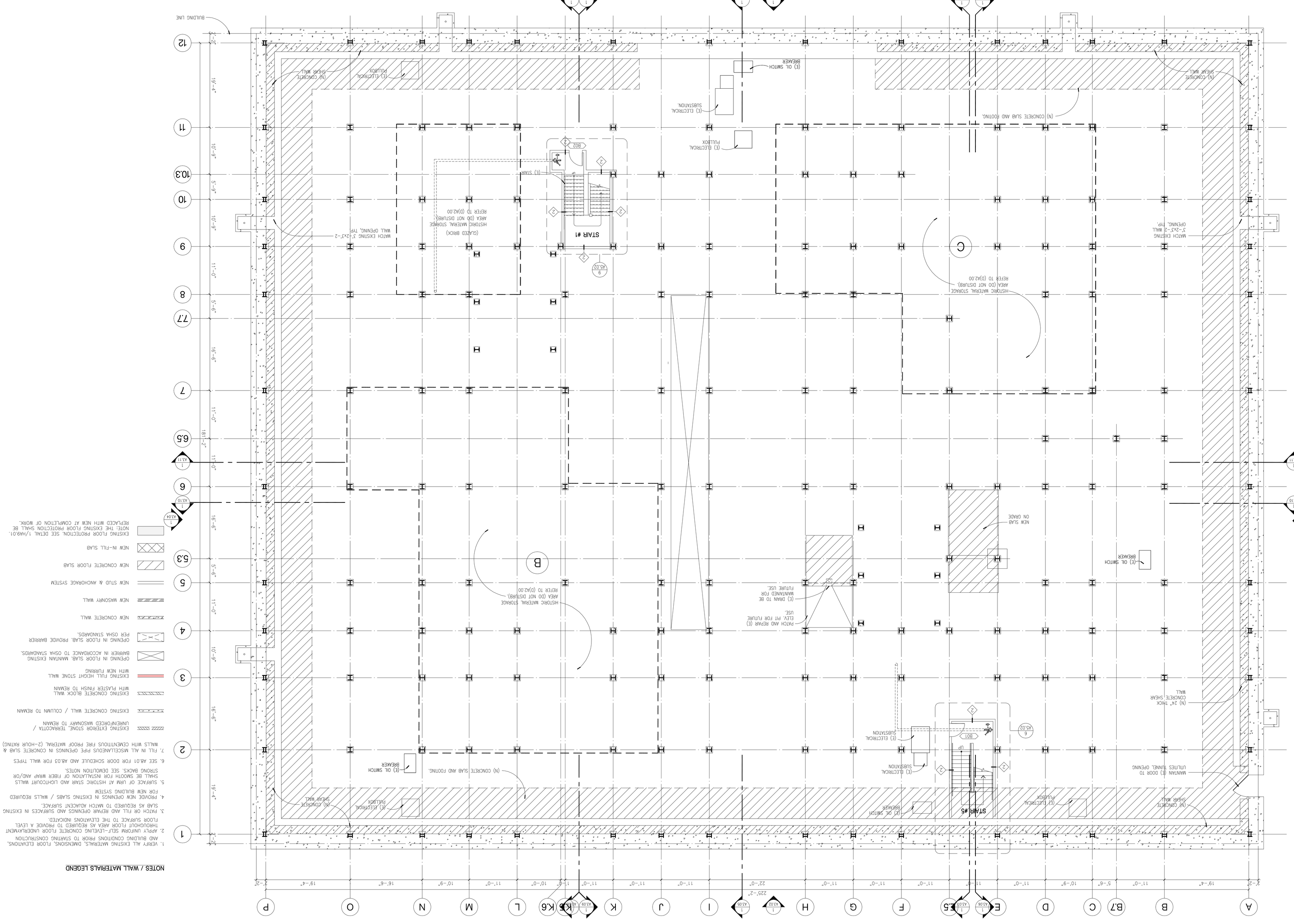

N

0' 2' 6' 16'
4' 8'

NOTES / WALL MATERIALS LEGEND

1. VERIFY ALL EXISTING MATERIALS, DIMENSIONS, FLOOR ELEVATIONS, AND BUILDING CONDITIONS PRIOR TO STARTING CONSTRUCTION
2. APPLY UNIFORM SELF-LEVELING CONCRETE FLOOR UNDERLAYMENT THROUGHOUT FLOOR AREA AS REQUIRED TO PROVIDE A LEVEL FLOOR SURFACE TO THE ELEVATIONS INDICATED.
3. PATCH OR FILL AND REPAIR OPENINGS AND SURFACES IN EXISTING SLAB AS REQUIRED TO MATCH ADJACENT SURFACE.
4. PROVIDE NEW OPENINGS IN EXISTING SLABS / WALLS REQUIRED FOR NEW BUILDING SYSTEM
5. SURFACE OF UBM AT HISTORIC STAIR AND LIGHTCOURT WALLS SHALL BE SMOOTH FOR INSTALLATION OF FIBER WRAP AND/OR STRONG BACKS. SEE DEMOLITION NOTES.
6. SEE A8.01 FOR DOOR SCHEDULE AND A8.03 FOR WALL TYPES
7. FILL IN ALL MISCELLANEOUS PIPE OPENINGS IN CONCRETE SLAB & WALLS WITH CEMENTITIOUS FIRE PROOF MATERIAL (2-HOUR RATING)

- EXISTING EXTERIOR STONE, TERRACOTTA / UNREINFORCED MASONARY TO REMAIN
- EXISTING CONCRETE WALL / COLUMN TO REMAIN
- EXISTING CONCRETE BLOCK WALL WITH PLASTER FINISH TO REMAIN
- EXISTING FULL HEIGHT STONE WALL WITH NEW FURRING
- OPENING IN FLOOR SLAB, MAINTAIN EXISTING BARRIER IN ACCORDANCE TO OSHA STANDARDS.
- OPENING IN FLOOR SLAB. PROVIDE BARRIER PER OSHA STANDARDS.
- NEW CONCRETE WALL
- NEW MASONRY WALL
- NEW STUD & ANCHORAGE SYSTEM
- NEW CONCRETE FLOOR SLAB
- NEW IN-FILL SLAB
- EXISTING FLOOR PROTECTION. SEE DETAIL 1/HA9.01. NOTE: THE EXISTING FLOOR PROTECTION SHALL BE REPLACED WITH NEW AT COMPLETION OF WORK.

NADEL Architects Inc.
1990 So. Bundy Dr.
Fourth Floor
Los Angeles, CA 90025
T. 310.826.2100
F. 310.826.0182
www.nadelarc.com

CONSULTANT

DRAWING TITLE

REVISIONS

BASEMENT FLOOR PLAN

SCOPING DOCUMENTS 100% SUBMISSION AUGUST 2010

SCALE : 1/8"=1'-0"
DATE :
JOB NO :
SHEET NO.

A2.00

COUNTY OF LOS ANGELES
THE HALL OF JUSTICE
STRUCTURAL RETROFIT PHASE

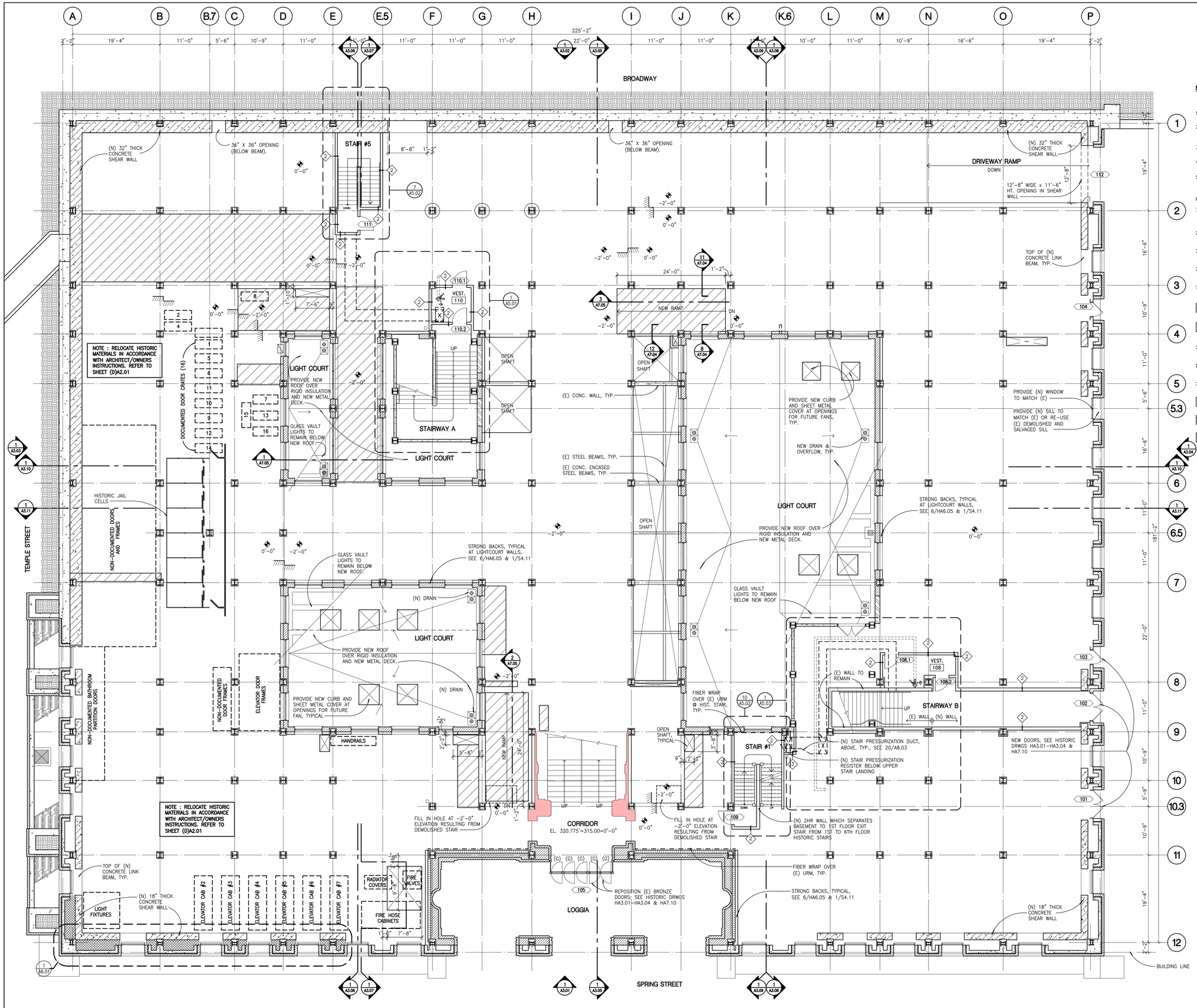

NOTES / WALL MATERIALS LEGEND

1. VERIFY ALL EXISTING MATERIALS, DIMENSIONS, FLOOR ELEVATIONS, AND BUILDING CONDITIONS PRIOR TO STARTING CONSTRUCTION
2. APPLY UNIFORM SELF-LEVELING CONCRETE FLOOR UNDERLAYMENT THROUGHOUT FLOOR AREA AS REQUIRED TO PROVIDE A LEVEL FLOOR SURFACE TO THE ELEVATIONS INDICATED.
3. PATCH OR FILL AND REPAIR OPENINGS AND SURFACES IN EXISTING SLAB AS REQUIRED TO MATCH ADJACENT SURFACE.
4. PROVIDE NEW OPENINGS IN EXISTING SLABS / WALLS REQUIRED FOR NEW BUILDING SYSTEM
5. SURFACE OF URM AT HISTORIC STAIR AND LIGHTCOURT WALLS SHALL BE SMOOTH FOR INSTALLATION OF FIBER WRAP AND/OR STRONG BACKS. SEE DEMOLITION NOTES.
6. SEE A8.01 FOR DOOR SCHEDULE AND A8.03 FOR WALL TYPES
7. FILL IN ALL MISCELLANEOUS PIPE OPENINGS IN CONCRETE SLAB & WALLS WITH CEMENTITIOUS FIRE PROOF MATERIAL (2-HOUR RATING)

- EXISTING EXTERIOR STONE, TERRACOTTA / UNREINFORCED MASONARY TO REMAIN
- EXISTING CONCRETE WALL / COLUMN TO REMAIN
- EXISTING CONCRETE BLOCK WALL WITH PLASTER FINISH TO REMAIN
- EXISTING FULL HEIGHT STONE WALL WITH NEW FURRING
- OPENING IN FLOOR SLAB. MAINTAIN EXISTING BARRIER IN ACCORDANCE TO OSHA STANDARDS.
- OPENING IN FLOOR SLAB. PROVIDE BARRIER PER OSHA STANDARDS.
- NEW CONCRETE WALL
- NEW MASONRY WALL
- NEW STUD & ANCHORAGE SYSTEM
- NEW CONCRETE FLOOR SLAB
- NEW IN-FILL SLAB
- EXISTING FLOOR PROTECTION. SEE DETAIL 1/HA9.01. NOTE: THE EXISTING FLOOR PROTECTION SHALL BE REPLACED WITH NEW AT COMPLETION OF WORK.

4' 8' 0' 2' 6' 16'

N

FIRST FLOOR PLAN | SCALE: 1/8"=1'-0" | 1

ALL DRAWINGS AND WRITTEN MATERIAL APPEARING HEREIN CONSTITUTE THE ORIGINAL AND UNPUBLISHED WORK OF THE ARCHITECT AND THE SAME MAY NOT BE DUPLICATED, USED OR DISCLOSED WITHOUT THE WRITTEN CONSENT OF THE ARCHITECT. COPYRIGHT - NADEL ARCHITECTS INC. - ALL RIGHTS RESERVED

NADEL
Architects Inc.

1990 So. Bundy Dr.
Fourth Floor
Los Angeles, CA 90025

T. 310.826.2100
F. 310.826.0182

www.nadelarc.com

CONSULTANT

COUNTY OF LOS ANGELES

THE HALL OF JUSTICE

STRUCTURAL RETROFIT PHASE

REVISIONS

DRAWING TITLE

FIRST FLOOR PLAN

SCOPING DOCUMENTS 100% SUBMISSION AUGUST 2010

SCALE : 1/8"=1'-0"
DATE :
JOB NO :
SHEET NO.

A2.01

ALL DRAWINGS AND MATERIAL APPEARING HEREIN CONSTITUTE THE ORIGINAL AND UNPUBLISHED WORK OF THE ARCHITECT AND THE SAME MAY NOT BE DUPLICATED, USED OR DISCLOSED WITHOUT THE WRITTEN CONSENT OF THE ARCHITECT. COPYRIGHT: NADEL ARCHITECTS INC. ALL RIGHTS RESERVED.

SECOND FLOOR PLAN

SCALE: 1/8"=1'-0"

1

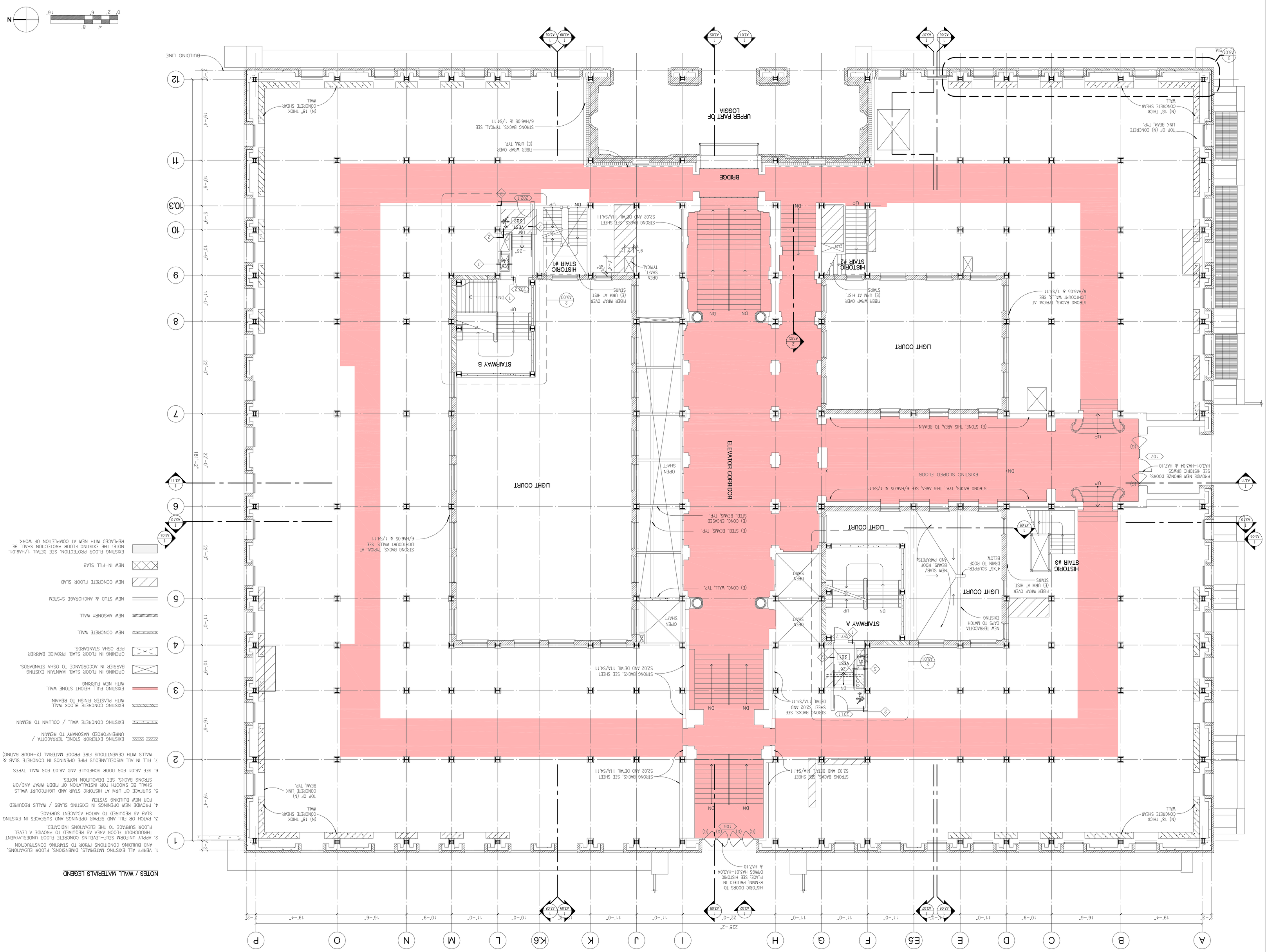

NOTES / WALL MATERIALS LEGEND

1. VERIFY ALL EXISTING MATERIALS, DIMENSIONS, FLOOR ELEVATIONS, AND BUILDING CONDITIONS PRIOR TO STARTING CONSTRUCTION
2. APPLY LIMEWAY SELF-LEVELING CONCRETE FLOOR UNDERLAYMENT THROUGHOUT FLOOR AREA AS REQUIRED TO PROVIDE A LEVEL FLOOR SURFACE TO THE ELEVATIONS INDICATED.
3. PATCH OR FILL AND REPAIR OPENINGS AND SURFACES IN EXISTING SLAB AS REQUIRED TO MATCH ADJACENT SURFACE.
4. PROVIDE NEW OPENINGS IN EXISTING SLABS / WALLS REQUIRED FOR NEW BUILDING SYSTEM
5. SURFACE OF UBM AT HISTORIC STAIR AND LIGHTCOURT WALLS SHALL BE SMOOTH FOR INSTALLATION OF FIBER WRAP AND/OR STRONG BACKS. SEE DEMOLITION NOTES.
6. SEE A8.01 FOR DOOR SCHEDULE AND A8.03 FOR WALL TYPES
7. FILL IN ALL MISCELLANEOUS PIPE OPENINGS IN CONCRETE SLAB & WALLS WITH CEMENTITIOUS FIRE PROOF MATERIAL (2-HOUR RATING)

- EXISTING EXTERIOR STONE, TERRACOTTA / UNREINFORCED MASONRY TO REMAIN
- EXISTING CONCRETE WALL / COLUMN TO REMAIN
- EXISTING CONCRETE BLOCK WALL WITH PLASTER FINISH TO REMAIN
- EXISTING FULL HEIGHT STONE WALL WITH NEW FURRING
- OPENING IN FLOOR SLAB, MAINTAIN EXISTING BARRIER IN ACCORDANCE TO OSHA STANDARDS.
- OPENING IN FLOOR SLAB. PROVIDE BARRIER PER OSHA STANDARDS.
- NEW CONCRETE WALL
- NEW MASONRY WALL
- NEW STUD & ANCHORAGE SYSTEM
- NEW CONCRETE FLOOR SLAB
- NEW IN-FILL SLAB
- EXISTING FLOOR PROTECTION. SEE DETAIL 1/HA9.01. NOTE: THE EXISTING FLOOR PROTECTION SHALL BE REPLACED WITH NEW AT COMPLETION OF WORK.

NADEL Architects Inc.
1990 So. Bundy Dr.
Fourth Floor
Los Angeles, CA 90025
T. 310.826.2100
F. 310.826.0182
www.nadelarc.com

CONSULTANT

REVISIONS

1	
2	
3	
4	
5	
6	

DRAWING TITLE

SECOND FLOOR PLAN

SCOPING DOCUMENTS 100% SUBMISSION AUGUST 2010

COUNTY OF LOS ANGELES
THE HALL OF JUSTICE
STRUCTURAL RETROFIT PHASE

SCALE	1/8"=1'-0"
DATE	
JOB NO	
SHEET NO.	A2.02

ALL DRAWINGS AND MATTER MATERIAL APPEARING HEREIN CONSTITUTE THE ORIGINAL AND UNPUBLISHED WORK OF THE ARCHITECT AND THE SAME MAY NOT BE DUPLICATED, USED OR DISCLOSED WITHOUT THE WRITTEN CONSENT OF THE ARCHITECT. COPYRIGHT: NADEL ARCHITECTS INC. ALL RIGHTS RESERVED.

THIRD FLOOR PLAN

SCALE: 1/8"=1'-0" | 1

N

0' 2' 8' 4' 8' 16'

BUILDING LINE

(N) 18" THICK CONCRETE SHEAR WALL

TOP OF (N) CONCRETE LINK BEAM, TYP.

STAIRWAY B

HISTORIC STAIR #1

HISTORIC STAIR #2

HISTORIC STAIR #3

STAIRWAY A

LIGHT COURT

CORRIDOR

OPEN SHAFT

FIBER WRAP OVER (E) URM AT HIST. STAIRS, TYP.

STRONG BACKS, TYPICAL AT LIGHTCOURT WALLS, SEE 6/HA6.0S & 1/S4.11

(E) CONC. ENCASED STEEL BEAMS, TYP.

(E) STEEL BEAMS, TYP.

(E) CONC. WALL, TYP.

TYPICAL OPEN SHAFT

VEST. 301

VEST. 302

UP

DN

SMOKE VENT

+10"

9" 3'-6" 2'-2" 1'-6" 9"

102.1 102.2 102.3

AS.01

A6.01

A3.01 A3.02 A3.06 A3.07 A3.08 A3.09 A3.10 A3.11 A3.14 A3.15

1 2 3 4 5 6 7 8 9 10 10.3 11 12

A B C D E F G H I J K L M N O P

2'-2" 19'-4" 10'-9" 5'-0" 10'-9" 11'-0" 22'-0" 18'-2" 22'-0" 22'-0" 11'-0" 10'-9" 16'-6" 19'-4" 2'-2"

2'-2" 19'-4" 16'-6" 10'-9" 11'-0" 10'-0" 12'-0" 11'-0" 11'-0" 22'-0" 225'-2" 11'-0" 11'-0" 22'-0" 16'-6" 19'-4" 2'-2"

NOTES / WALL MATERIALS LEGEND

1. VERIFY ALL EXISTING MATERIALS, DIMENSIONS, FLOOR ELEVATIONS, AND BUILDING CONDITIONS PRIOR TO STARTING CONSTRUCTION
2. APPLY UNIFORM SELF-LEVELING CONCRETE FLOOR UNDERLAYMENT THROUGHOUT FLOOR AREA AS REQUIRED TO PROVIDE A LEVEL FLOOR SURFACE TO THE ELEVATIONS INDICATED.
3. PATCH OR FILL AND REPAIR OPENINGS AND SURFACES IN EXISTING SLAB AS REQUIRED TO MATCH ADJACENT SURFACE.
4. PROVIDE NEW OPENINGS IN EXISTING SLABS / WALLS REQUIRED FOR NEW BUILDING SYSTEM
5. SURFACE OF URM AT HISTORIC STAIR AND LIGHTCOURT WALLS SHALL BE SMOOTH FOR INSTALLATION OF FIBER WRAP AND/OR STRONG BACKS. SEE DEMOLITION NOTES.
6. SEE A8.01 FOR DOOR SCHEDULE AND A8.03 FOR WALL TYPES
7. FILL IN ALL MISCELLANEOUS PIPE OPENINGS IN CONCRETE SLAB & WALLS WITH CEMENTITIOUS FIRE PROOF MATERIAL (2-HOUR RATING)

EXISTING EXTERIOR STONE, TERRACOTTA / UNREINFORCED MASONRY TO REMAIN

EXISTING CONCRETE WALL / COLUMN TO REMAIN

EXISTING CONCRETE BLOCK WALL WITH PLASTER FINISH TO REMAIN

EXISTING FULL HEIGHT STONE WALL WITH NEW FURRING

OPENING IN FLOOR SLAB, MAINTAIN EXISTING BARRIER IN ACCORDANCE TO OSHA STANDARDS.

OPENING IN FLOOR SLAB, PROVIDE BARRIER PER OSHA STANDARDS.

NEW CONCRETE WALL

NEW MASONRY WALL

NEW STUD & ANCHORAGE SYSTEM

NEW CONCRETE FLOOR SLAB

NEW IN-FILL SLAB

EXISTING FLOOR PROTECTION. SEE DETAIL 1/HA9.01. NOTE: THE EXISTING FLOOR PROTECTION SHALL BE REPLACED WITH NEW AT COMPLETION OF WORK.

NADEL Architects Inc.
1990 So. Bundy Dr.
Fourth Floor
Los Angeles, CA 90025
T. 310.826.2100
F. 310.826.0182
www.nadelarc.com

CONSULTANT

DRAWING TITLE

REVISIONS

SCALE : 1/8"=1'-0"
DATE :
JOB NO :
SHEET NO.

A2.03

SCOPING DOCUMENTS 100% SUBMISSION AUGUST 2010

COUNTY OF LOS ANGELES

THE HALL OF JUSTICE

STRUCTURAL RETROFIT PHASE

ALL DRAWINGS AND WRITTEN MATERIAL APPEARING HEREIN CONSTITUTE THE ORIGINAL AND UNPUBLISHED WORK OF THE ARCHITECT AND THE SAME MAY NOT BE DUPLICATED, USED OR DISCLOSED WITHOUT THE WRITTEN CONSENT OF THE ARCHITECT. COPYRIGHT: NADEL ARCHITECTS INC. ALL RIGHTS RESERVED.

FOURTH FLOOR PLAN

SCALE: 1/8"=1'-0" | 1

N

0' 2' 6' 8' 4' 16'

BUILDING LINE

(N) 18" THICK CONCRETE SHEAR WALL

TOP OF (N) CONCRETE LINK BEAM, TYP.

(N) 18" THICK CONCRETE SHEAR WALL

(N) CONC. SLAB, TYP.

(N) LOW BEAM

(N) BEAM

HISTORIC STAIR #1

FIBER WRAP

OPEN SHAFT

OPEN SHAFT

OPEN SHAFT

ALL DRAWINGS AND MATTER MATERIAL APPEARING HEREIN CONSTITUTE THE ORIGINAL AND UNPUBLISHED WORK OF THE ARCHITECT AND THE SAME MAY NOT BE DUPLICATED, USED OR DISCLOSED WITHOUT THE WRITTEN CONSENT OF THE ARCHITECT. COPYRIGHT: NADEL ARCHITECTS INC. ALL RIGHTS RESERVED.

FIFTH FLOOR PLAN

SCALE: 1/8"=1'-0" | 1

N

0' 2' 8' 4' 8' 16'

BUILDING LINE

(N) 18" THICK CONCRETE SHEAR WALL

TOP OF (N) CONCRETE LINK BEAM, TYP.

(N) 18" THICK CONCRETE SHEAR WALL

HISTORIC STAIR #1

FIBER WRAP

STAIRWAY B

UP

DN

5/A5.01

HISTORIC STAIR #2

22 RISERS

20 RISERS

CORRIDOR

(E) STEEL BEAMS, TYP.

(E) CONC. ENCASED STEEL BEAMS, TYP.

(E) CONC. WALL, TYP.

STRONG BACKS, TYPICAL AT LIGHTCOURT WALLS. SEE 6/HA6.05 & 1/S4.11

LIGHT COURT

OPEN SHAFT

OPEN SHAFT, TYPICAL

STAIRWAY A

HISTORIC STAIR #3

FIBER WRAP OVER (E) HIST. STAIRS, TYPICAL

(N) 18" THICK CONCRETE SHEAR WALL

TOP OF (N) CONCRETE LINK BEAM, TYP.

(N) 18" THICK CONCRETE SHEAR WALL

VEST.

501

501.1

501.2

502

502.1

A1.01 A1.07 A1.08 A1.09 A2.02 A2.03 A3.01 A3.07 A3.08 A3.09 A4.1 A4.10 A5.01 A5.07 A6.01

1 2 3 4 5 6 7 8 9 10 10.3 11 12

19'-4" 22'-0" 18'-2" 22'-0" 11'-0" 10'-9" 5'-0" 10'-9" 11'-0" 22'-0" 16'-6" 19'-4" 2'-2"

A B C D E F G H I J K L M N O P

19'-4" 16'-6" 10'-9" 11'-0" 22'-0" 11'-0" 11'-0" 12'-0" 10'-0" 11'-0" 10'-0" 22'-0" 225'-2" 2'-2"

NOTES / WALL MATERIALS LEGEND

1. VERIFY ALL EXISTING MATERIALS, DIMENSIONS, FLOOR ELEVATIONS, AND BUILDING CONDITIONS PRIOR TO STARTING CONSTRUCTION.
2. APPLY UNIFORM SELF-LEVELING CONCRETE FLOOR UNDERLAYMENT THROUGHOUT FLOOR AREA AS REQUIRED TO PROVIDE A LEVEL FLOOR SURFACE TO THE ELEVATIONS INDICATED.
3. PATCH OR FILL AND REPAIR OPENINGS AND SURFACES IN EXISTING SLAB AS REQUIRED TO MATCH ADJACENT SURFACE.
4. PROVIDE NEW OPENINGS IN EXISTING SLABS / WALLS REQUIRED FOR NEW BUILDING SYSTEM
5. SURFACE OF HBM AT HISTORIC STAIR AND LIGHTCOURT WALLS SHALL BE SMOOTH FOR INSTALLATION OF FIBER WRAP AND/OR STRONG BACKS. SEE DEMOLITION NOTES.
6. SEE A8.01 FOR DOOR SCHEDULE AND A8.03 FOR WALL TYPES
7. FILL IN ALL MISCELLANEOUS PIPE OPENINGS IN CONCRETE SLAB & WALLS WITH CEMENTITIOUS FIRE PROOF MATERIAL (2-HOUR RATING)

EXISTING EXTERIOR STONE, TERRACOTTA / UNREINFORCED MASONARY TO REMAIN

EXISTING CONCRETE WALL / COLUMN TO REMAIN

EXISTING CONCRETE BLOCK WALL WITH PLASTER FINISH TO REMAIN

EXISTING FULL HEIGHT STONE WALL WITH NEW FURRING

OPENING IN FLOOR SLAB, MAINTAIN EXISTING BARRIER IN ACCORDANCE TO OSHA STANDARDS.

OPENING IN FLOOR SLAB. PROVIDE BARRIER PER OSHA STANDARDS.

NEW MASONRY WALL

NEW CONCRETE WALL

NEW STUD & ANCHORAGE SYSTEM

NEW CONCRETE FLOOR SLAB

NEW IN-FILL SLAB

EXISTING FLOOR PROTECTION. SEE DETAIL 1/HA9.01. NOTE: THE EXISTING FLOOR PROTECTION SHALL BE REPLACED WITH NEW AT COMPLETION OF WORK.

NADEL Architects Inc.

1990 So. Bundy Dr.
Fourth Floor
Los Angeles, CA 90025
T. 310.826.2100
F. 310.826.0182
www.nadelarc.com

CONSULTANT

DRAWING TITLE

REVISIONS

COUNTY OF LOS ANGELES

THE HALL OF JUSTICE

STRUCTURAL RETROFIT PHASE

SCALE : 1/8"=1'-0"
DATE :
JOB NO :
SHEET NO.

A2.05

SCOPING DOCUMENTS 100% SUBMISSION AUGUST 2010

ALL DRAWINGS AND MATTER MATERIAL APPEARING HEREIN CONSTITUTE THE ORIGINAL AND UNPUBLISHED WORK OF THE ARCHITECT AND THE SAME MAY NOT BE DUPLICATED, USED OR DISCLOSED WITHOUT THE WRITTEN CONSENT OF THE ARCHITECT. COPYRIGHT: NADEL ARCHITECTS INC. ALL RIGHTS RESERVED.

SIXTH FLOOR PLAN

SCALE: 1/8"=1'-0" | 1

N

0' 2' 8' 4' 8' 16'

BUILDING LINE

(N) 18" THICK CONCRETE SHEAR WALL

TOP OF (N) CONCRETE LINK BEAM, TYP.

(N) 18" THICK CONCRETE SHEAR WALL

HISTORIC STAIR #4

HISTORIC STAIR #1

FIBER WRAP

OPEN SHAFT

VEST. 602

602.1

602.2

STAIRWAY B

OPEN SHAFT, TYPICAL

HISTORIC STAIR #2

(E) CONC. ENCASED STEEL BEAMS, TYP.

(E) STEEL BEAMS, TYP.

CORRIDOR

LIGHT COURT

STRONG BACKS, TYPICAL AT LIGHTCOURT WALLS, SEE 6/HA6.05 & 1/S4.11

(E) CONC. WALL, TYP.

STAIRWAY A

VEST. 601

601.2

601.1

FIBER WRAP OVER (E) URM AT HIST. STAIRS, TYPICAL

HISTORIC STAIR #3

(N) 18" THICK CONCRETE SHEAR WALL

TOP OF (N) CONCRETE LINK BEAM, TYP.

(N) 18" THICK CONCRETE SHEAR WALL

12 11 10.3 10 9 8 7 6 5 4 3 2 1

A P O N M L K J I H G F E D C B A

19'-4" 10'-9" 5'-0" 10'-9" 11'-0" 22'-0" 18'-2" 22'-0" 22'-0" 11'-0" 16'-9" 19'-4" 2'-2"

19'-4" 16'-6" 10'-9" 11'-0" 22'-0" 11'-0" 11'-0" 22'-0" 11'-0" 11'-0" 22'-0" 16'-6" 19'-4" 2'-2"

NOTES / WALL MATERIALS LEGEND

1. VERIFY ALL EXISTING MATERIALS, DIMENSIONS, FLOOR ELEVATIONS, AND BUILDING CONDITIONS PRIOR TO STARTING CONSTRUCTION
2. APPLY UNIFORM SELF-LEVELING CONCRETE FLOOR UNDERLAYMENT THROUGHOUT FLOOR AREA AS REQUIRED TO PROVIDE A LEVEL FLOOR SURFACE TO THE ELEVATIONS INDICATED.
3. PATCH OR FILL AND REPAIR OPENINGS AND SURFACES IN EXISTING SLAB AS REQUIRED TO MATCH ADJACENT SURFACE.
4. PROVIDE NEW OPENINGS IN EXISTING SLABS / WALLS REQUIRED FOR NEW BUILDING SYSTEM
5. SURFACE OF URM AT HISTORIC STAIR AND LIGHTCOURT WALLS SHALL BE SMOOTH FOR INSTALLATION OF FIBER WRAP AND/OR STRONG BACKS. SEE DEMOLITION NOTES.
6. SEE A8.01 FOR DOOR SCHEDULE AND A8.03 FOR WALL TYPES
7. FILL IN ALL MISCELLANEOUS PIPE OPENINGS IN CONCRETE SLAB & WALLS WITH CEMENTITIOUS FIRE PROOF MATERIAL (2-HOUR RATING)

EXISTING EXTERIOR STONE, TERRACOTTA / UNREINFORCED MASONARY TO REMAIN

EXISTING CONCRETE WALL / COLUMN TO REMAIN

EXISTING CONCRETE BLOCK WALL WITH PLASTER FINISH TO REMAIN

EXISTING FULL HEIGHT STONE WALL WITH NEW FURRING

OPENING IN FLOOR SLAB. MAINTAIN EXISTING BARRIER IN ACCORDANCE TO OSHA STANDARDS.

OPENING IN FLOOR SLAB. PROVIDE BARRIER PER OSHA STANDARDS.

NEW MASONRY WALL

NEW CONCRETE WALL

NEW STUD & ANCHORAGE SYSTEM

NEW CONCRETE FLOOR SLAB

NEW IN-FILL SLAB

EXISTING FLOOR PROTECTION. SEE DETAIL 1/HA9.01. NOTE: THE EXISTING FLOOR PROTECTION SHALL BE REPLACED WITH NEW AT COMPLETION OF WORK.

NADEL Architects Inc.
1990 So. Bundy Dr.
Fourth Floor
Los Angeles, CA 90025
T. 310.826.2100
F. 310.826.0182
www.nadelarc.com

CONSULTANT

DRAWING TITLE

REVISIONS

COUNTY OF LOS ANGELES
THE HALL OF JUSTICE
STRUCTURAL RETROFIT PHASE

SCALE : 1/8"=1'-0"
DATE :
JOB NO :
SHEET NO.

A2.06

SCOPING DOCUMENTS 100% SUBMISSION AUGUST 2010

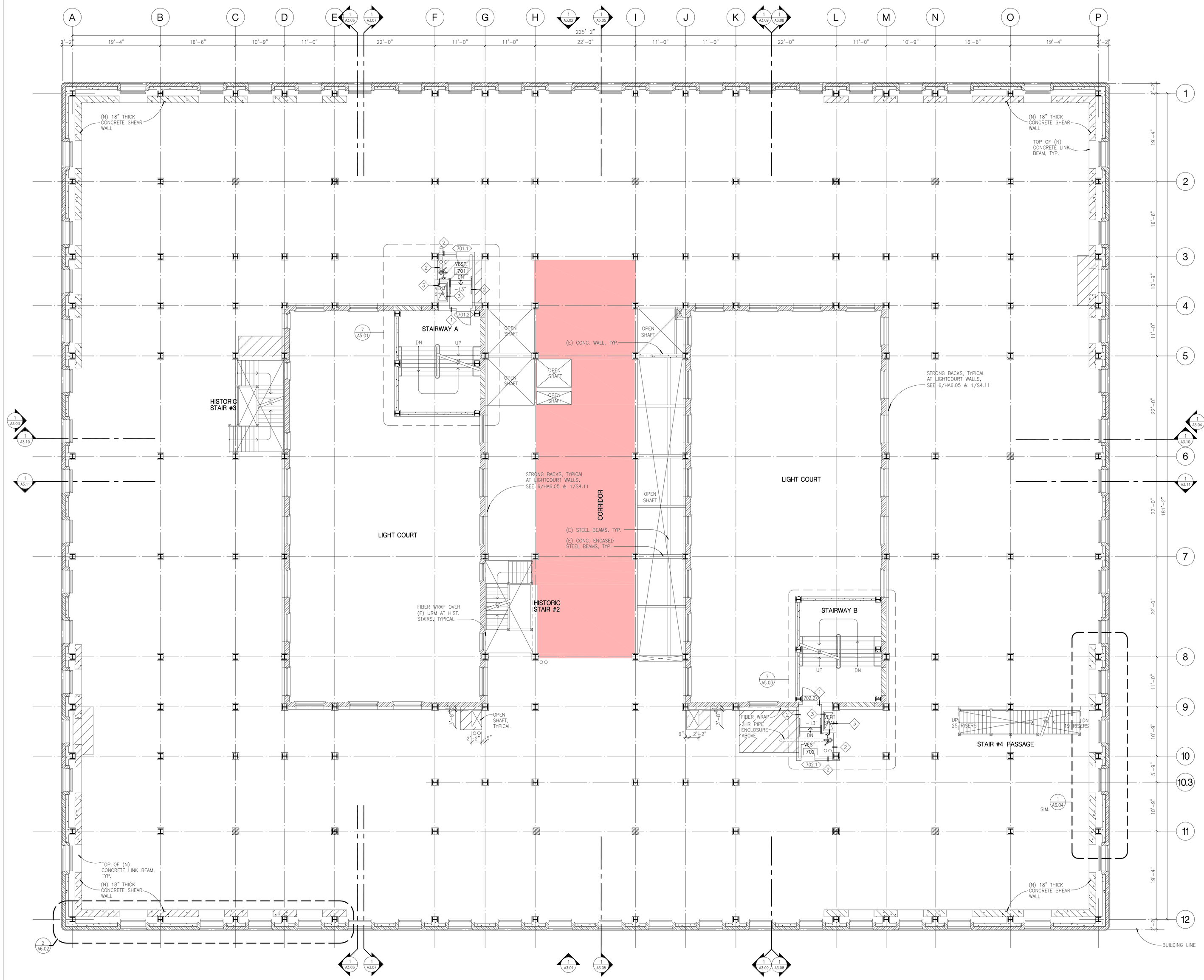

NOTES / WALL MATERIALS LEGEND

1. VERIFY ALL EXISTING MATERIALS, DIMENSIONS, FLOOR ELEVATIONS, AND BUILDING CONDITIONS PRIOR TO STARTING CONSTRUCTION
2. APPLY UNIFORM SELF-LEVELING CONCRETE FLOOR UNDERLAYMENT THROUGHOUT FLOOR AREA AS REQUIRED TO PROVIDE A LEVEL FLOOR SURFACE TO THE ELEVATIONS INDICATED.
3. PATCH OR FILL AND REPAIR OPENINGS AND SURFACES IN EXISTING SLAB AS REQUIRED TO MATCH ADJACENT SURFACE.
4. PROVIDE NEW OPENINGS IN EXISTING SLABS / WALLS REQUIRED FOR NEW BUILDING SYSTEM
5. SURFACE OF URM AT HISTORIC STAIR AND LIGHTCOURT WALLS SHALL BE SMOOTH FOR INSTALLATION OF FIBER WRAP AND/OR STRONG BACKS. SEE DEMOLITION NOTES.
6. SEE A8.01 FOR DOOR SCHEDULE AND A8.03 FOR WALL TYPES
7. FILL IN ALL MISCELLANEOUS PIPE OPENINGS IN CONCRETE SLAB & WALLS WITH CEMENTITIOUS FIRE PROOF MATERIAL (2-HOUR RATING)

- EXISTING EXTERIOR STONE, TERRACOTTA / UNREINFORCED MASONARY TO REMAIN
- EXISTING CONCRETE WALL / COLUMN TO REMAIN
- EXISTING CONCRETE BLOCK WALL WITH PLASTER FINISH TO REMAIN
- EXISTING FULL HEIGHT STONE WALL WITH NEW FURRING
- OPENING IN FLOOR SLAB. MAINTAIN EXISTING BARRIER IN ACCORDANCE TO OSHA STANDARDS.
- OPENING IN FLOOR SLAB. PROVIDE BARRIER PER OSHA STANDARDS.
- NEW CONCRETE WALL
- NEW MASONRY WALL
- NEW STUD & ANCHORAGE SYSTEM
- NEW CONCRETE FLOOR SLAB
- NEW IN-FILL SLAB
- EXISTING FLOOR PROTECTION. SEE DETAIL 1/HA9.01. NOTE: THE EXISTING FLOOR PROTECTION SHALL BE REPLACED WITH NEW AT COMPLETION OF WORK.

4' 8'
0" 2" 4" 8" 16'
N

SEVENTH FLOOR PLAN | SCALE: 1/8"=1'-0" | 1

NADEL Architects Inc.
1990 So. Bundy Dr.
Fourth Floor
Los Angeles, CA 90025
T. 310.826.2100
F. 310.826.0182
www.nadelarc.com

CONSULTANT

COUNTY OF LOS ANGELES
THE HALL OF JUSTICE
STRUCTURAL RETROFIT PHASE

REVISIONS

DRAWING TITLE

SEVENTH FLOOR PLAN

SCALE : 1/8"=1'-0"
DATE :
JOB NO :
SHEET NO.
A2.07

SCOPING DOCUMENTS 100% SUBMISSION AUGUST 2010

ALL DRAWINGS AND WRITTEN MATERIAL APPEARING HEREIN CONSTITUTE THE ORIGINAL AND UNPUBLISHED WORK OF THE ARCHITECT AND THE SAME MAY NOT BE DUPLICATED, USED OR DISCLOSED WITHOUT THE WRITTEN CONSENT OF THE ARCHITECT. COPYRIGHT: NADEL ARCHITECTS INC. ALL RIGHTS RESERVED.

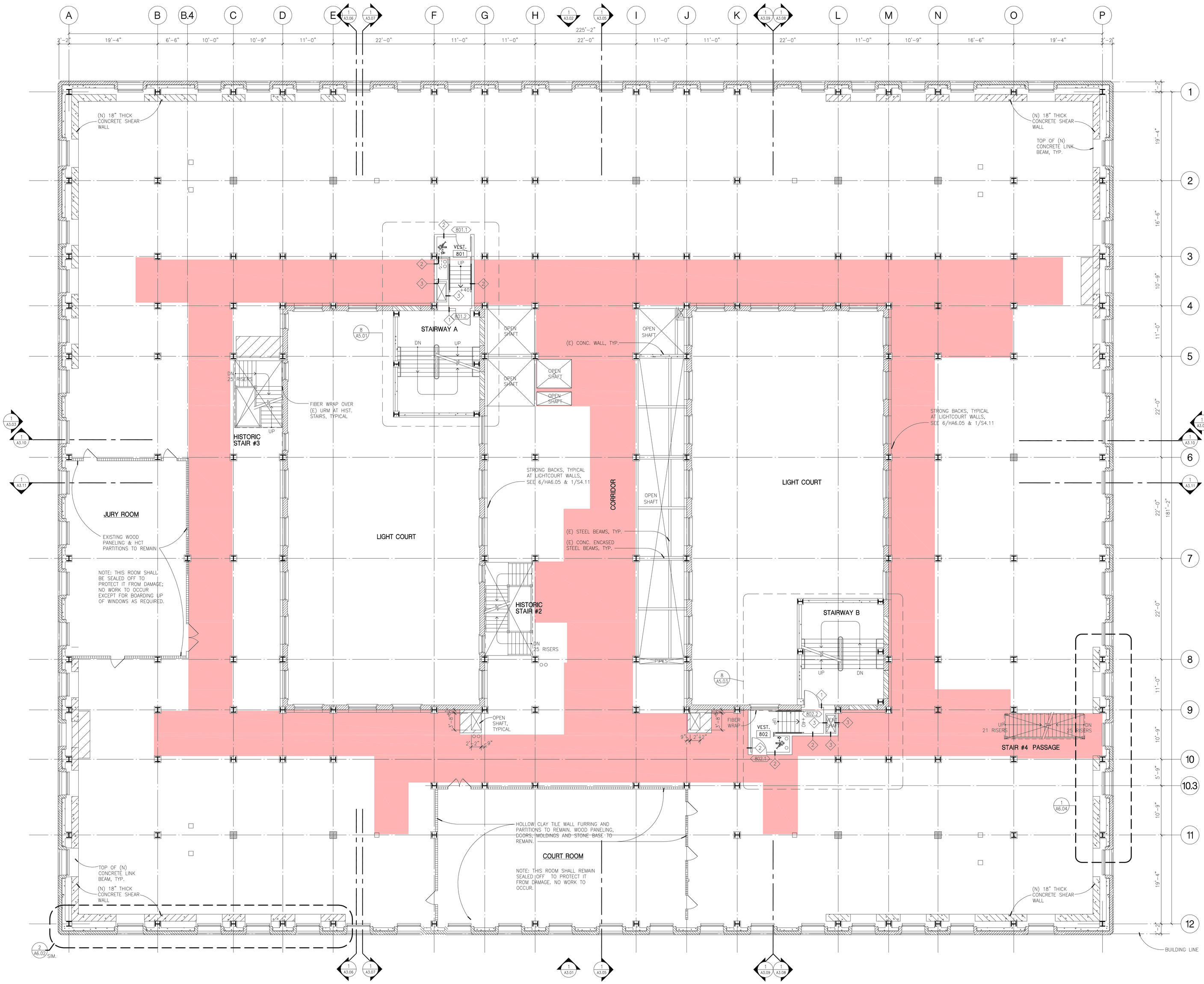

NOTES / WALL MATERIALS LEGEND

1. VERIFY ALL EXISTING MATERIALS, DIMENSIONS, FLOOR ELEVATIONS, AND BUILDING CONDITIONS PRIOR TO STARTING CONSTRUCTION
2. APPLY UNIFORM SELF-LEVELING CONCRETE FLOOR UNDERLAYMENT THROUGHOUT FLOOR AREA AS REQUIRED TO PROVIDE A LEVEL FLOOR SURFACE TO THE ELEVATIONS INDICATED.
3. PATCH OR FILL AND REPAIR OPENINGS AND SURFACES IN EXISTING SLAB AS REQUIRED TO MATCH ADJACENT SURFACE.
4. PROVIDE NEW OPENINGS IN EXISTING SLABS / WALLS REQUIRED FOR NEW BUILDING SYSTEM
5. SURFACE OF URM AT HISTORIC STAIR AND LIGHTCOURT WALLS SHALL BE SMOOTH FOR INSTALLATION OF FIBER WRAP AND/OR STRONG BACKS. SEE DEMOLITION NOTES.
6. SEE A8.01 FOR DOOR SCHEDULE AND A8.03 FOR WALL TYPES
7. FILL IN ALL MISCELLANEOUS PIPE OPENINGS IN CONCRETE SLAB & WALLS WITH CEMENTITIOUS FIRE PROOF MATERIAL (2-HOUR RATING)

- EXISTING EXTERIOR STONE, TERRACOTTA / UNREINFORCED MASONARY TO REMAIN
- EXISTING CONCRETE WALL / COLUMN TO REMAIN
- EXISTING CONCRETE BLOCK WALL WITH PLASTER FINISH TO REMAIN
- EXISTING FULL HEIGHT STONE WALL WITH NEW FURRING
- OPENING IN FLOOR SLAB. MAINTAIN EXISTING BARRIER IN ACCORDANCE TO OSHA STANDARDS.
- OPENING IN FLOOR SLAB. PROVIDE BARRIER PER OSHA STANDARDS.
- NEW CONCRETE WALL
- NEW MASONRY WALL
- NEW STUD & ANCHORAGE SYSTEM
- NEW CONCRETE FLOOR SLAB
- NEW IN-FILL SLAB
- EXISTING FLOOR PROTECTION. SEE DETAIL 1/HA9.01. NOTE: THE EXISTING FLOOR PROTECTION SHALL BE REPLACED WITH NEW AT COMPLETION OF WORK.

NADEL
Architects Inc.

1990 So. Bundy Dr.
Fourth Floor
Los Angeles, CA 90025

T. 310.826.2100
F. 310.826.0182

www.nadelarc.com

CONSULTANT

COUNTY OF LOS ANGELES
THE HALL OF JUSTICE
STRUCTURAL RETROFIT PHASE

REVISIONS

DRAWING TITLE

EIGHTH FLOOR PLAN

SCALE : 1/8"=1'-0"
DATE :
JOB NO :
SHEET NO.
A2.08

SCOPING DOCUMENTS 100% SUBMISSION AUGUST 2010

EIGHTH FLOOR PLAN | SCALE: 1/8"=1'-0" | 1

ALL DRAWINGS AND WRITTEN MATERIAL APPEARING HEREIN CONSTITUTE THE ORIGINAL AND UNPUBLISHED WORK OF THE ARCHITECT AND THE SAME MAY NOT BE DUPLICATED, USED OR DISCLOSED WITHOUT THE WRITTEN CONSENT OF THE ARCHITECT. COPYRIGHT: NADEL ARCHITECTS INC. ALL RIGHTS RESERVED.

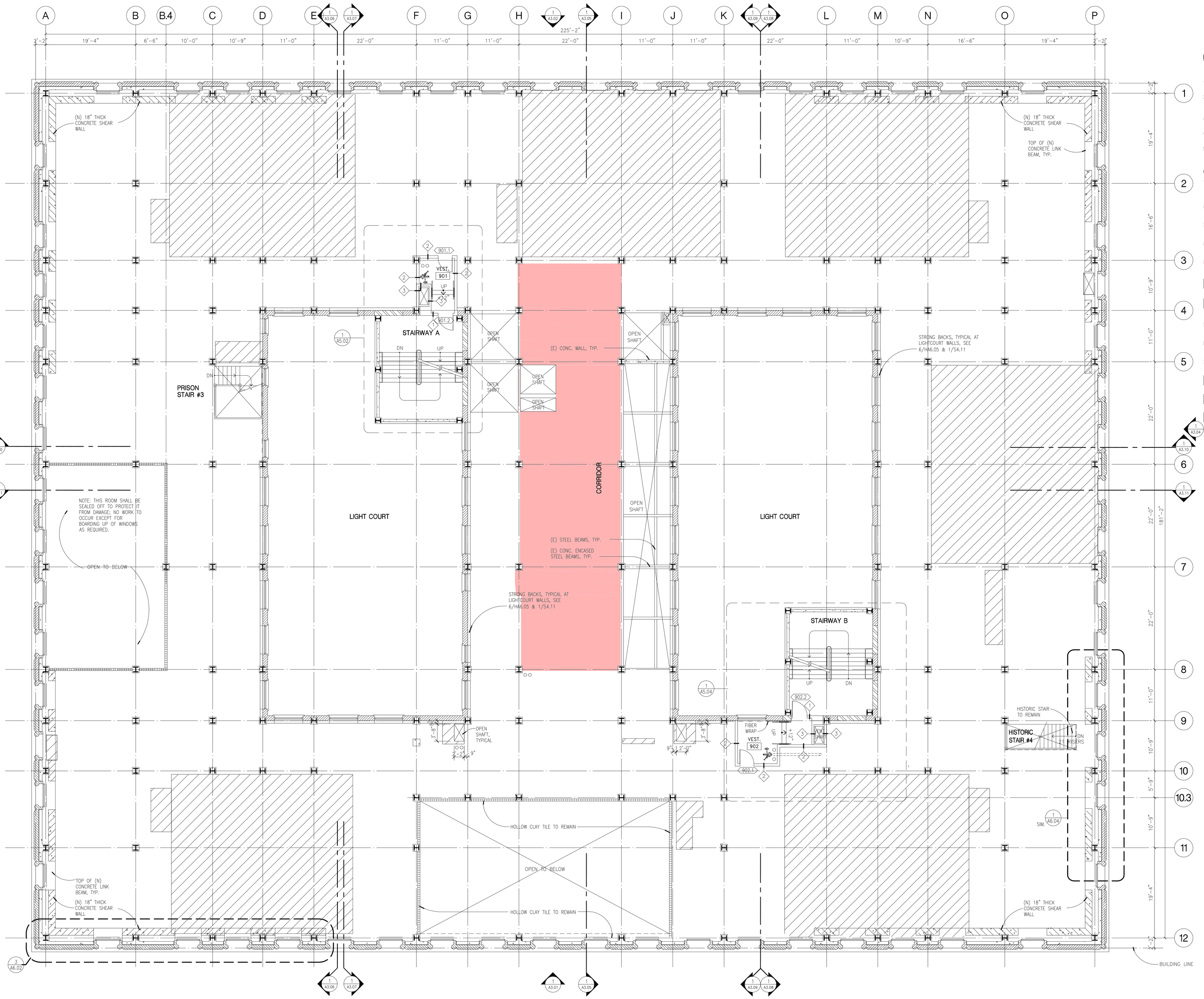

NOTES / WALL MATERIALS LEGEND

1. VERIFY ALL EXISTING MATERIALS, DIMENSIONS, FLOOR ELEVATIONS, AND BUILDING CONDITIONS PRIOR TO STARTING CONSTRUCTION
2. APPLY UNIFORM SELF-LEVELING CONCRETE FLOOR UNDERLAYMENT THROUGHOUT FLOOR AREA AS REQUIRED TO PROVIDE A LEVEL FLOOR SURFACE TO THE ELEVATIONS INDICATED.
3. PATCH OR FILL AND REPAIR OPENINGS AND SURFACES IN EXISTING SLAB AS REQUIRED TO MATCH ADJACENT SURFACE.
4. PROVIDE NEW OPENINGS IN EXISTING SLABS / WALLS REQUIRED FOR NEW BUILDING SYSTEM
5. SURFACE OF URM AT HISTORIC STAIR AND LIGHTCOURT WALLS SHALL BE SMOOTH FOR INSTALLATION OF FIBER WRAP AND/OR STRONG BACKS. SEE DEMOLITION NOTES.
6. SEE A8.01 FOR DOOR SCHEDULE AND A8.03 FOR WALL TYPES
7. FILL IN ALL MISCELLANEOUS PIPE OPENINGS IN CONCRETE SLAB & WALLS WITH CEMENTITIOUS FIRE PROOF MATERIAL (2-HOUR RATING)

- EXISTING EXTERIOR STONE, TERRACOTTA / UNREINFORCED MASONARY TO REMAIN
- EXISTING CONCRETE WALL / COLUMN TO REMAIN
- EXISTING CONCRETE BLOCK WALL WITH PLASTER FINISH TO REMAIN
- EXISTING FULL HEIGHT STONE WALL WITH NEW FURRING
- OPENING IN FLOOR SLAB. MAINTAIN EXISTING BARRIER IN ACCORDANCE TO OSHA STANDARDS.
- OPENING IN FLOOR SLAB. PROVIDE BARRIER PER OSHA STANDARDS.
- NEW CONCRETE WALL
- NEW MASONRY WALL
- NEW STUD & ANCHORAGE SYSTEM
- NEW CONCRETE FLOOR SLAB
- NEW IN-FILL SLAB
- EXISTING FLOOR PROTECTION. SEE DETAIL 1/HA9.01. NOTE: THE EXISTING FLOOR PROTECTION SHALL BE REPLACED WITH NEW AT COMPLETION OF WORK.

4' 8'
0' 2' 6' 16'
N

NINTH FLOOR PLAN | SCALE: 1/8"=1'-0" | 1

NADEL Architects Inc.
1990 So. Bundy Dr.
Fourth Floor
Los Angeles, CA 90025
T. 310.826.2100
F. 310.826.0182
www.nadelarc.com

CONSULTANT

COUNTY OF LOS ANGELES
THE HALL OF JUSTICE
STRUCTURAL RETROFIT PHASE

REVISIONS

DRAWING TITLE

NINTH FLOOR PLAN

SCOPING DOCUMENTS 100% SUBMISSION AUGUST 2010

SCALE : 1/8"=1'-0"
DATE :
JOB NO :
SHEET NO.

A2.09

ALL DRAWINGS AND WRITTEN MATERIAL APPEARING HEREIN CONSTITUTE THE ORIGINAL AND UNPUBLISHED WORK OF THE ARCHITECT AND THE SAME MAY NOT BE DUPLICATED, USED OR DISCLOSED WITHOUT THE WRITTEN CONSENT OF THE ARCHITECT. COPYRIGHT: NADEL ARCHITECTS INC. ALL RIGHTS RESERVED.

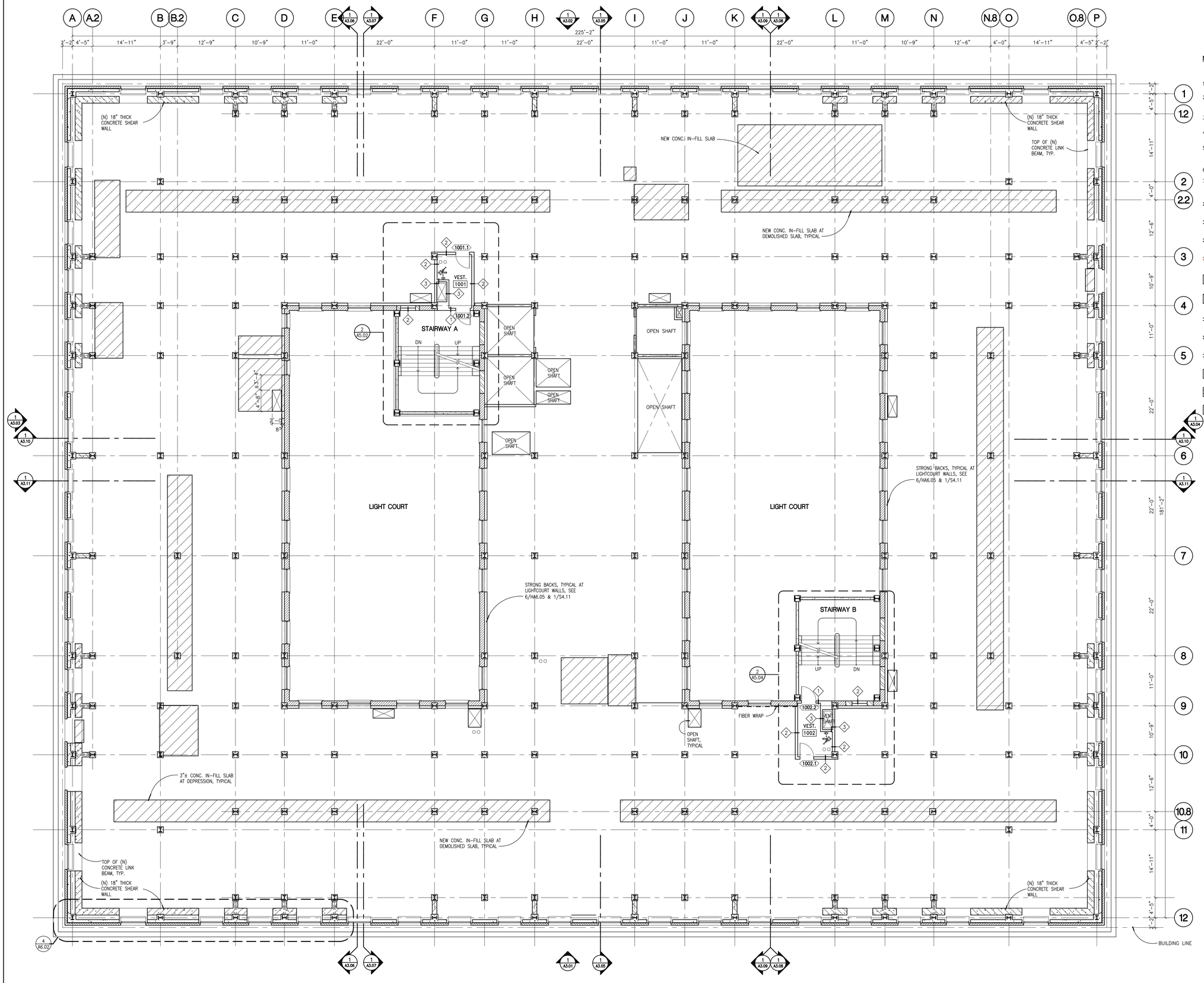

NOTES / WALL MATERIALS LEGEND

1. VERIFY ALL EXISTING MATERIALS, DIMENSIONS, FLOOR ELEVATIONS, AND BUILDING CONDITIONS PRIOR TO STARTING CONSTRUCTION
2. APPLY UNIFORM SELF-LEVELING CONCRETE FLOOR UNDERLAYMENT THROUGHOUT FLOOR AREA AS REQUIRED TO PROVIDE A LEVEL FLOOR SURFACE TO THE ELEVATIONS INDICATED.
3. PATCH OR FILL AND REPAIR OPENINGS AND SURFACES IN EXISTING SLAB AS REQUIRED TO MATCH ADJACENT SURFACE.
4. PROVIDE NEW OPENINGS IN EXISTING SLABS / WALLS REQUIRED FOR NEW BUILDING SYSTEM
5. SURFACE OF URM AT HISTORIC STAIR AND LIGHTCOURT WALLS SHALL BE SMOOTH FOR INSTALLATION OF FIBER WRAP AND/OR STRONG BACKS. SEE DEMOLITION NOTES.
6. SEE A8.01 FOR DOOR SCHEDULE AND A8.03 FOR WALL TYPES
7. FILL IN ALL MISCELLANEOUS PIPE OPENINGS IN CONCRETE SLAB & WALLS WITH CEMENTITIOUS FIRE PROOF MATERIAL (2-HOUR RATING)

- EXISTING EXTERIOR STONE, TERRACOTTA / UNREINFORCED MASONARY TO REMAIN
- EXISTING CONCRETE WALL / COLUMN TO REMAIN
- EXISTING CONCRETE BLOCK WALL WITH PLASTER FINISH TO REMAIN
- EXISTING FULL HEIGHT STONE WALL WITH NEW FURRING
- OPENING IN FLOOR SLAB. MAINTAIN EXISTING BARRIER IN ACCORDANCE TO OSHA STANDARDS.
- OPENING IN FLOOR SLAB. PROVIDE BARRIER PER OSHA STANDARDS.
- NEW CONCRETE WALL
- NEW MASONRY WALL
- NEW STUD & ANCHORAGE SYSTEM
- NEW CONCRETE FLOOR SLAB
- NEW IN-FILL SLAB
- EXISTING FLOOR PROTECTION. SEE DETAIL 1/HA9.01. NOTE: THE EXISTING FLOOR PROTECTION SHALL BE REPLACED WITH NEW AT COMPLETION OF WORK.

NADEL Architects Inc.

1990 So. Bundy Dr.
Fourth Floor
Los Angeles, CA 90025

T. 310.826.2100
F. 310.826.0182

www.nadelarc.com

CONSULTANT

COUNTY OF LOS ANGELES
THE HALL OF JUSTICE
STRUCTURAL RETROFIT PHASE

REVISIONS

DRAWING TITLE

TENTH FLOOR PLAN

SCOPING DOCUMENTS 100% SUBMISSION AUGUST 2010

SCALE : 1/8"=1'-0"
DATE :
JOB NO :
SHEET NO.

A2.10

ALL DRAWINGS AND WRITTEN MATERIAL APPEARING HEREIN CONSTITUTE THE ORIGINAL AND UNPUBLISHED WORK OF THE ARCHITECT AND THE SAME MAY NOT BE DUPLICATED, USED OR DISCLOSED WITHOUT THE WRITTEN CONSENT OF THE ARCHITECT. COPYRIGHT - NADEL ARCHITECTS INC. ALL RIGHTS RESERVED

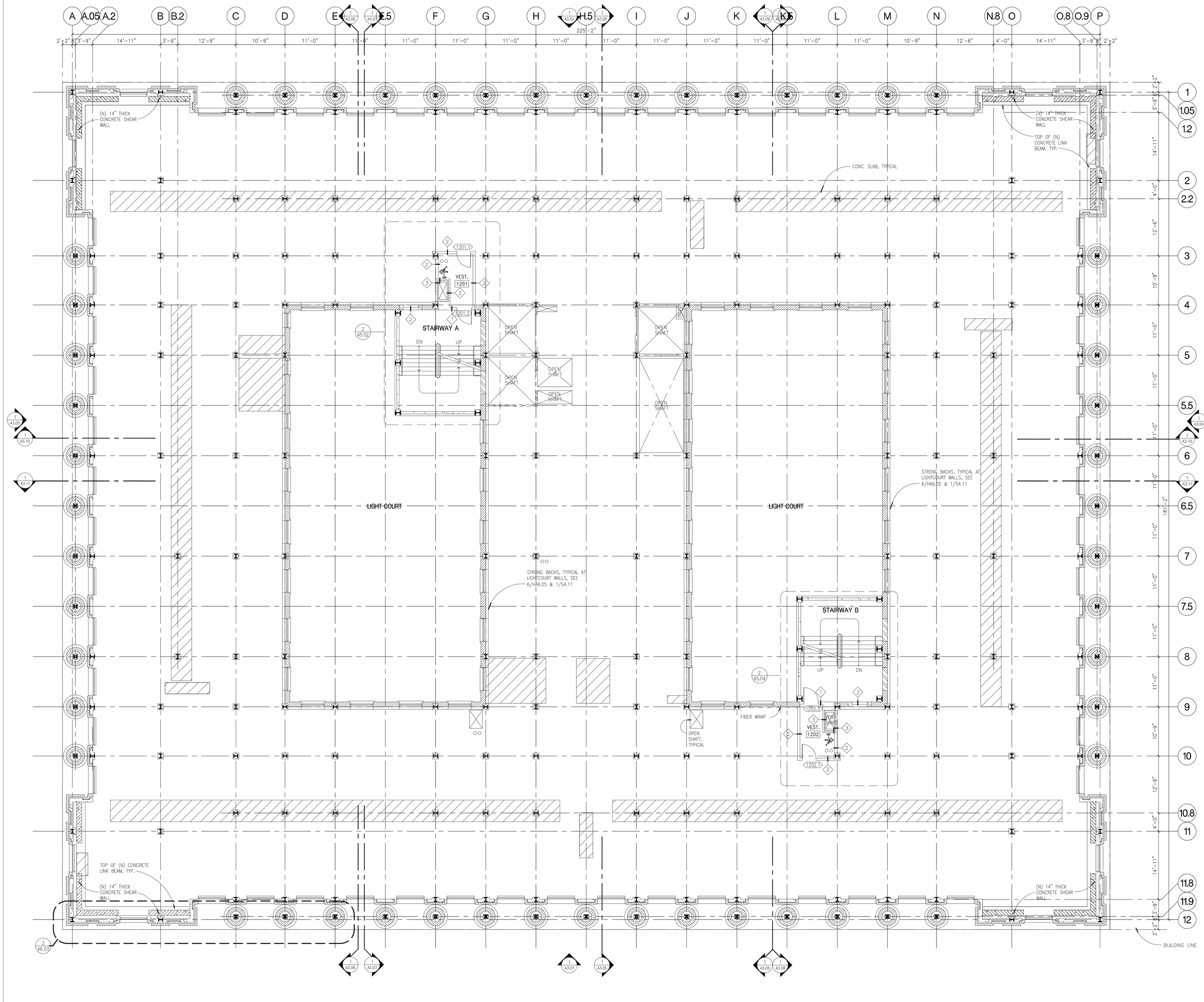

NOTES / WALL MATERIALS LEGEND

1. VERIFY ALL EXISTING MATERIALS, DIMENSIONS, FLOOR ELEVATIONS, AND BUILDING CONDITIONS PRIOR TO STARTING CONSTRUCTION
2. APPLY UNIFORM SELF-LEVELING CONCRETE FLOOR UNDERLAYMENT THROUGHOUT FLOOR AREA AS REQUIRED TO PROVIDE A LEVEL FLOOR SURFACE TO THE ELEVATIONS INDICATED.
3. PATCH OR FILL AND REPAIR OPENINGS AND SURFACES IN EXISTING SLAB AS REQUIRED TO MATCH ADJACENT SURFACE.
4. PROVIDE NEW OPENINGS IN EXISTING SLABS / WALLS REQUIRED FOR NEW BUILDING SYSTEM
5. SURFACE OF URM AT HISTORIC STAIR AND LIGHTCOURT WALLS SHALL BE SMOOTH FOR INSTALLATION OF FIBER WRAP AND/OR STRONG BACKS. SEE DEMOLITION NOTES.
6. SEE A8.01 FOR DOOR SCHEDULE AND A8.03 FOR WALL TYPES
7. FILL IN ALL MISCELLANEOUS PIPE OPENINGS IN CONCRETE SLAB & WALLS WITH CEMENTITIOUS FIRE PROOF MATERIAL (2-HOUR RATING)

- EXISTING EXTERIOR STONE, TERRACOTTA / UNREINFORCED MASONARY TO REMAIN
- EXISTING CONCRETE WALL / COLUMN TO REMAIN
- EXISTING CONCRETE BLOCK WALL WITH PLASTER FINISH TO REMAIN
- EXISTING FULL HEIGHT STONE WALL WITH NEW FURRING
- OPENING IN FLOOR SLAB. MAINTAIN EXISTING BARRIER IN ACCORDANCE TO OSHA STANDARDS.
- OPENING IN FLOOR SLAB. PROVIDE BARRIER PER OSHA STANDARDS.
- NEW CONCRETE WALL
- NEW MASONRY WALL
- NEW STUD & ANCHORAGE SYSTEM
- NEW CONCRETE FLOOR SLAB
- NEW IN-FILL SLAB
- EXISTING FLOOR PROTECTION. SEE DETAIL 1/HA9.01. NOTE: THE EXISTING FLOOR PROTECTION SHALL BE REPLACED WITH NEW AT COMPLETION OF WORK.

TWELFTH FLOOR PLAN

SCALE: 1/8"=1'-0"

1

NADEL Architects Inc.

1990 So. Bundy Dr.
Fourth Floor
Los Angeles, CA 90025

T. 310.826.2100
F. 310.826.0182

www.nadelarc.com

CONSULTANT

COUNTY OF LOS ANGELES
THE HALL OF JUSTICE
STRUCTURAL RETROFIT PHASE

REVISIONS

DRAWING TITLE

TWELFTH FLOOR PLAN

SCOPING DOCUMENTS 100% SUBMISSION AUGUST 2010

SCALE : 1/8"=1'-0"
DATE :
JOB NO :
SHEET NO.

A2.12

ALL DRAWINGS AND WRITTEN MATERIAL APPEARING HEREIN CONSTITUTE THE ORIGINAL AND UNPUBLISHED WORK OF THE ARCHITECT AND THE SAME MAY NOT BE DUPLICATED, USED OR DISCLOSED WITHOUT THE WRITTEN CONSENT OF THE ARCHITECT. COPYRIGHT: NADEL ARCHITECTS INC. ALL RIGHTS RESERVED.

ALL DRAWINGS AND MATTER MATERIAL APPEARING HEREIN CONSTITUTE THE ORIGINAL AND UNPUBLISHED WORK OF THE ARCHITECT AND THE SAME MAY NOT BE DUPLICATED, USED OR DISCLOSED WITHOUT THE WRITTEN CONSENT OF THE ARCHITECT. COPYRIGHT: NADEL ARCHITECTS INC. ALL RIGHTS RESERVED.

FOURTEENTH FLOOR PLAN

SCALE: 1/8"=1'-0"

1

N

0' 2' 8' 4' 8' 16'

BUILDING LINE

(N) 14" THICK CONCRETE SHEAR WALL

LOW WALL

TOP OF (N) CONCRETE LINK BEAM, TYP.

(N) 14" THICK CONCRETE SHEAR WALL

FIBER WRAP

STAIRWAY B

STAIRWAY A

LIGHT COURT

STRONG BACKS, TYPICAL AT LIGHTCOURT WALLS. SEE 6/HA6.05 & 1/S4.11

SEE 6/HA6.05 & 1/S4.11

TOP OF (N) CONCRETE LINK BEAM, TYP.

(N) 14" THICK CONCRETE SHEAR WALL

OPEN SHAFT

VEST.

MEN

WOM

UP

DN

1402.1

1402.2

1401.1

1401.2

1401

1402

A6.01

A6.02

A6.03

A6.04

A6.05

A6.06

A6.07

A6.08

A6.09

A6.10

A6.11

A6.12

A6.13

A6.14

A6.15

A6.16

A6.17

A6.18

A6.19

A6.20

A6.21

A6.22

A6.23

A6.24

A6.25

A6.26

A6.27

A6.28

A6.29

A6.30

A6.31

A6.32

A6.33

A6.34

A6.35

A6.36

A6.37

A6.38

A6.39

A6.40

ALL DRAWINGS AND MATERIAL APPEARING HEREIN CONSTITUTE THE ORIGINAL AND UNPUBLISHED WORK OF THE ARCHITECT AND THE SAME MAY NOT BE DUPLICATED, USED OR DISCLOSED WITHOUT THE WRITTEN CONSENT OF THE ARCHITECT. COPYRIGHT: NADEL ARCHITECTS INC. ALL RIGHTS RESERVED.

PENTHOUSE FLOOR PLAN

SCALE: 1/8"=1'-0"

1

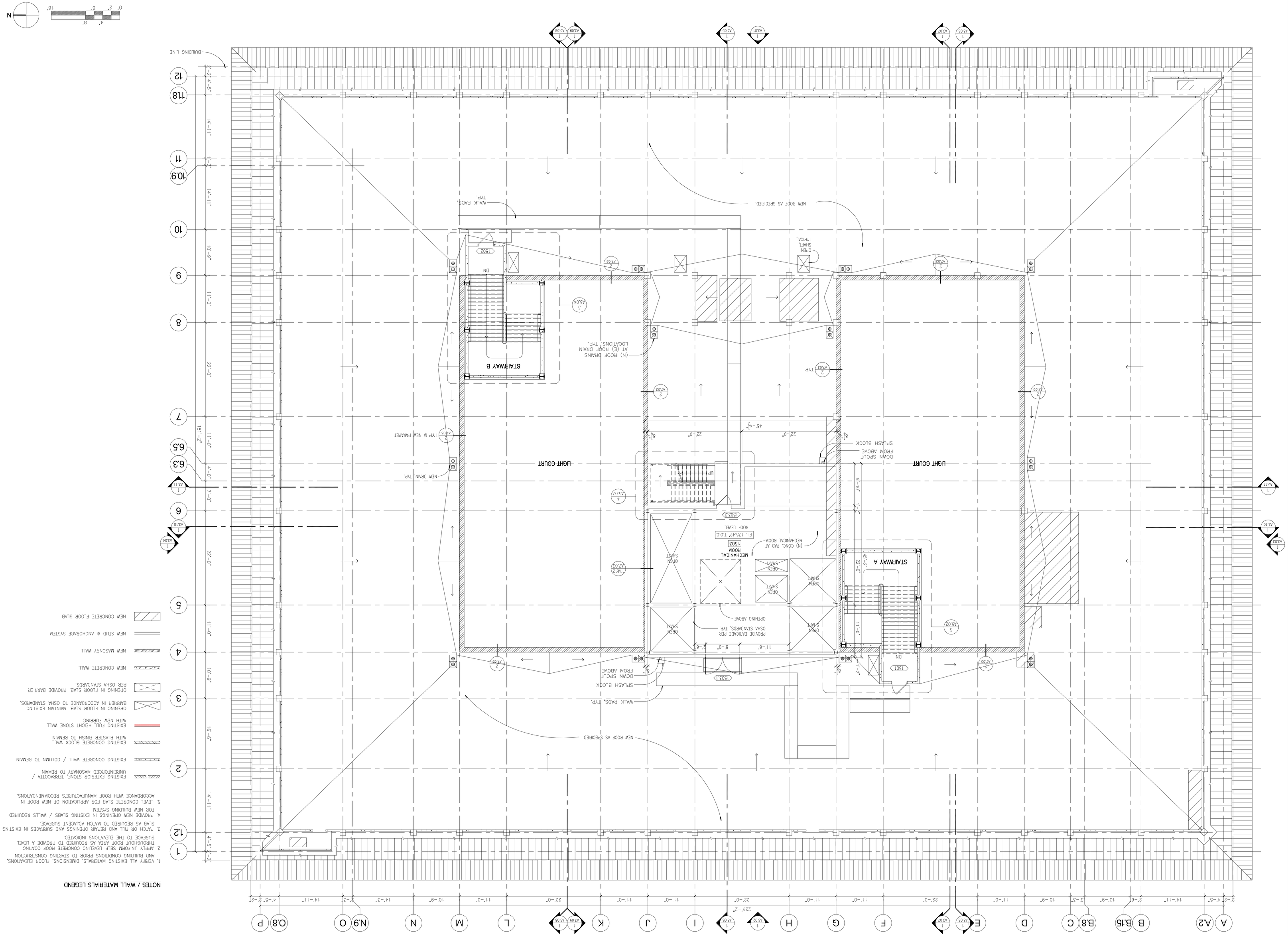

N

0' 2' 4' 8' 16'

NOTES / WALL MATERIALS LEGEND

1. VERIFY ALL EXISTING MATERIALS, DIMENSIONS, FLOOR ELEVATIONS, AND BUILDING CONDITIONS PRIOR TO STARTING CONSTRUCTION
2. APPLY UNIFORM SELF-LEVELING CONCRETE ROOF COATING THROUGHOUT ROOF AREA AS REQUIRED TO PROVIDE A LEVEL SURFACE TO THE ELEVATIONS INDICATED.
3. PATCH OR FILL AND REPAIR OPENINGS AND SURFACES IN EXISTING SLAB AS REQUIRED TO MATCH ADJACENT SURFACE.
4. PROVIDE NEW OPENINGS IN EXISTING SLABS / WALLS REQUIRED FOR NEW BUILDING SYSTEM
5. LEVEL CONCRETE SLAB FOR APPLICATION OF NEW ROOF IN ACCORDANCE WITH ROOF MANUFACTURER'S RECOMMENDATIONS.

- EXISTING EXTERIOR STONE, TERRACOTTA / UNDERINFORCED MASONARY TO REMAIN
- EXISTING CONCRETE WALL / COLUMN TO REMAIN
- EXISTING CONCRETE BLOCK WALL WITH PLASTER FINISH TO REMAIN
- EXISTING FULL HEIGHT STONE WALL WITH NEW FURRING
- OPENING IN FLOOR SLAB, MAINTAIN EXISTING BARRIER IN ACCORDANCE TO OSHA STANDARDS.
- OPENING IN FLOOR SLAB, PROVIDE BARRIER PER OSHA STANDARDS.
- NEW MASONRY WALL
- NEW CONCRETE WALL
- NEW STUD & ANCHORAGE SYSTEM
- NEW CONCRETE FLOOR SLAB

NADEL Architects Inc.
1990 So. Bundy Dr.
Fourth Floor
Los Angeles, CA 90025
T. 310.826.2100
F. 310.826.0182
www.nadelarc.com

CONSULTANT

REVISIONS

DRAWING TITLE

SCOPING DOCUMENTS 100% SUBMISSION AUGUST 2010

COUNTY OF LOS ANGELES

THE HALL OF JUSTICE

STRUCTURAL RETROFIT PHASE

SCALE : 1/8"=1'-0"

DATE :

JOB NO :

SHEET NO.

A2.15

ALL DRAWINGS AND MATERIAL APPEARING HEREIN CONSTITUTE THE ORIGINAL AND UNPUBLISHED WORK OF THE ARCHITECT AND THE SAME MAY NOT BE DUPLICATED, USED OR DISCLOSED WITHOUT THE WRITTEN CONSENT OF THE ARCHITECT. COPYRIGHT: NADEL ARCHITECTS INC. ALL RIGHTS RESERVED.

ELEV. MACHINE ROOM PLAN

SCALE: 1/8"=1'-0"

1

N

0' 2' 4' 8' 16'

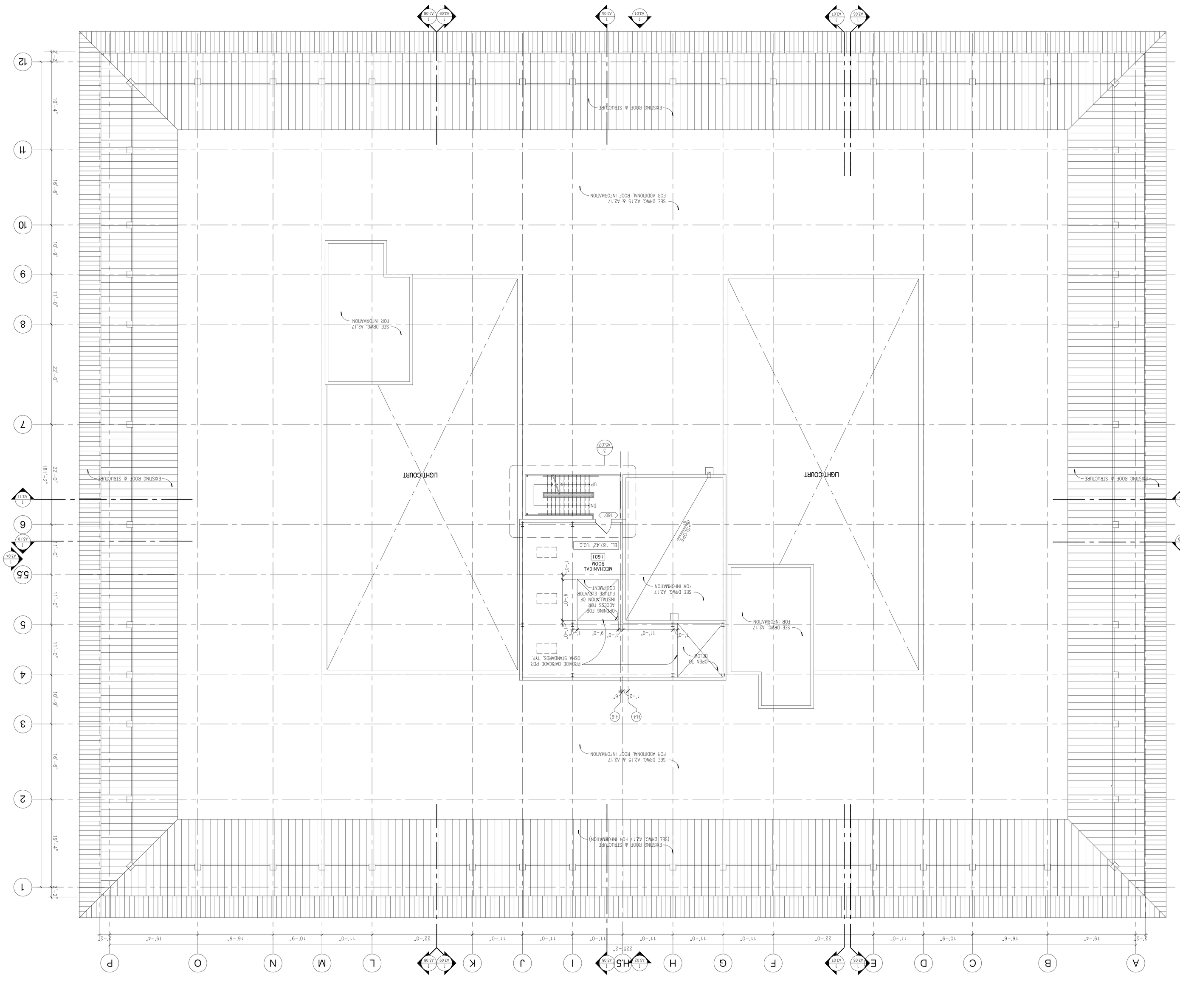

SCOPING DOCUMENTS 100% SUBMISSION AUGUST 2010

A2.16

SHEET NO.

JOB NO :

DATE :

SCALE : 1/8"=1'-0"

ELEV. MACHINE ROOM PLAN

DRAWING TITLE

REVISIONS

CONSULTANT

NADEL Architects Inc.
1990 So. Bundy Dr.
Fourth Floor
Los Angeles, CA 90025
T. 310.826.2100
F. 310.826.0182
www.nadelarc.com

COUNTY OF LOS ANGELES

THE HALL OF JUSTICE

STRUCTURAL RETROFIT PHASE

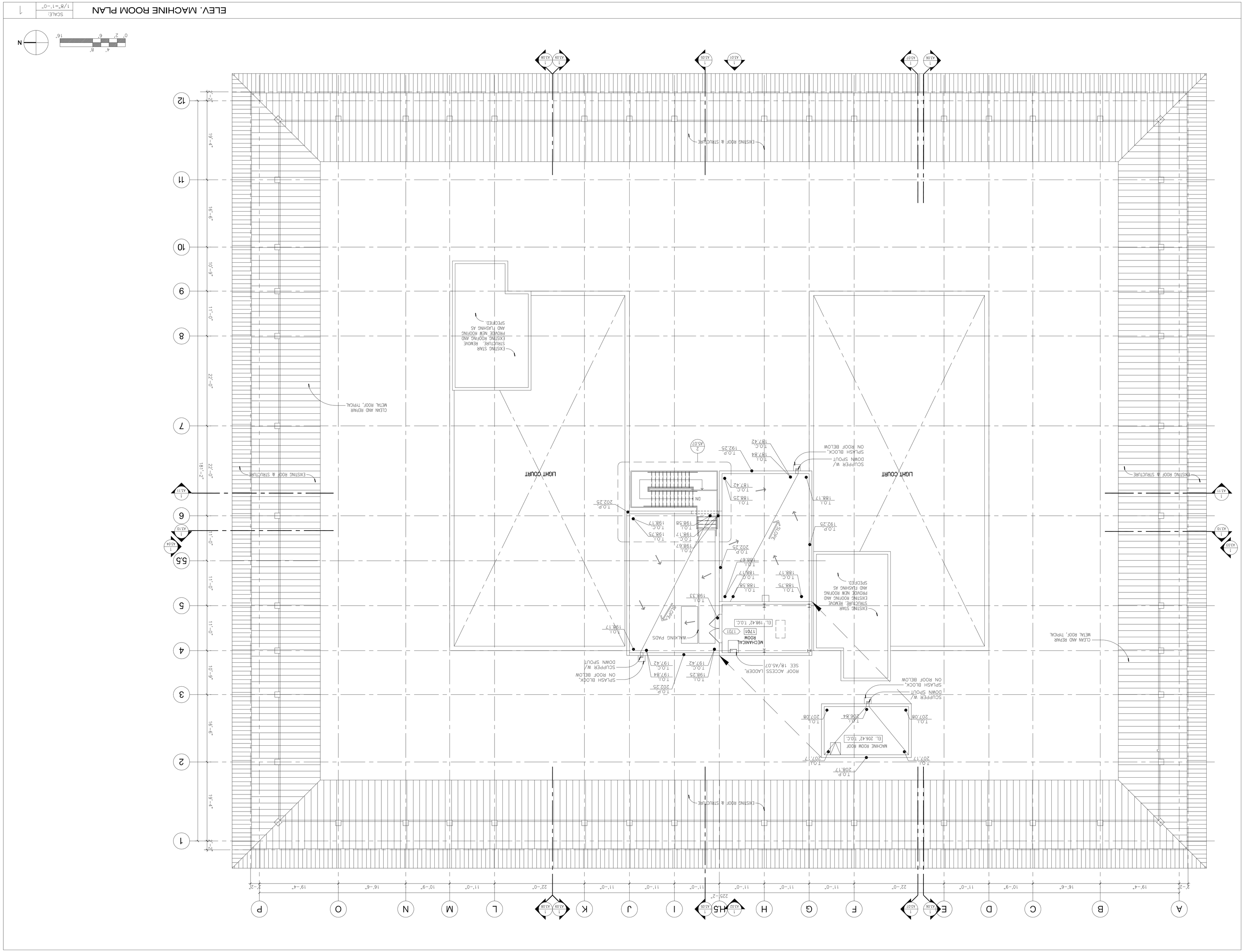

ELEV. MACHINE ROOM PLAN
SCALE: 1/8"=1'-0"
1

ELEV. MACHINE ROOM PLAN & MACHINE RM. ROOF PLAN

SCOPING DOCUMENTS 100% SUBMISSION AUGUST 2010

SCALE : 1/8"=1'-0"
DATE :
JOB NO :
SHEET NO.
A2.17

DRAWING TITLE

REVISIONS

COUNTY OF LOS ANGELES
THE HALL OF JUSTICE
STRUCTURAL RETROFIT PHASE

CONSULTANT

NADEL Architects Inc.
1990 So. Bundy Dr.
Fourth Floor
Los Angeles, CA 90025
T. 310.826.2100
F. 310.826.0182
www.nadelarc.com

ALL DRAWINGS AND WRITTEN MATERIAL APPEARING HEREIN CONSTITUTE THE ORIGINAL AND UNPUBLISHED WORK OF THE ARCHITECT AND THE SAME MAY NOT BE DUPLICATED, USED OR DISCLOSED WITHOUT THE WRITTEN CONSENT OF THE ARCHITECT. COPYRIGHT: NADEL ARCHITECTS INC. ALL RIGHTS RESERVED.

ALL DRAWINGS AND MATTER MATERIAL APPEARING HEREIN CONSTITUTE THE ORIGINAL AND UNPUBLISHED WORK OF THE ARCHITECT AND THE SAME MAY NOT BE DUPLICATED, USED OR DISCLOSED WITHOUT THE WRITTEN CONSENT OF THE ARCHITECT. COPYRIGHT: NADEL ARCHITECTS INC. ALL RIGHTS RESERVED.

BUILDING ELEVATION (EAST / SPRING STREET)

SCALE: 1/8"=1'-0" | 1

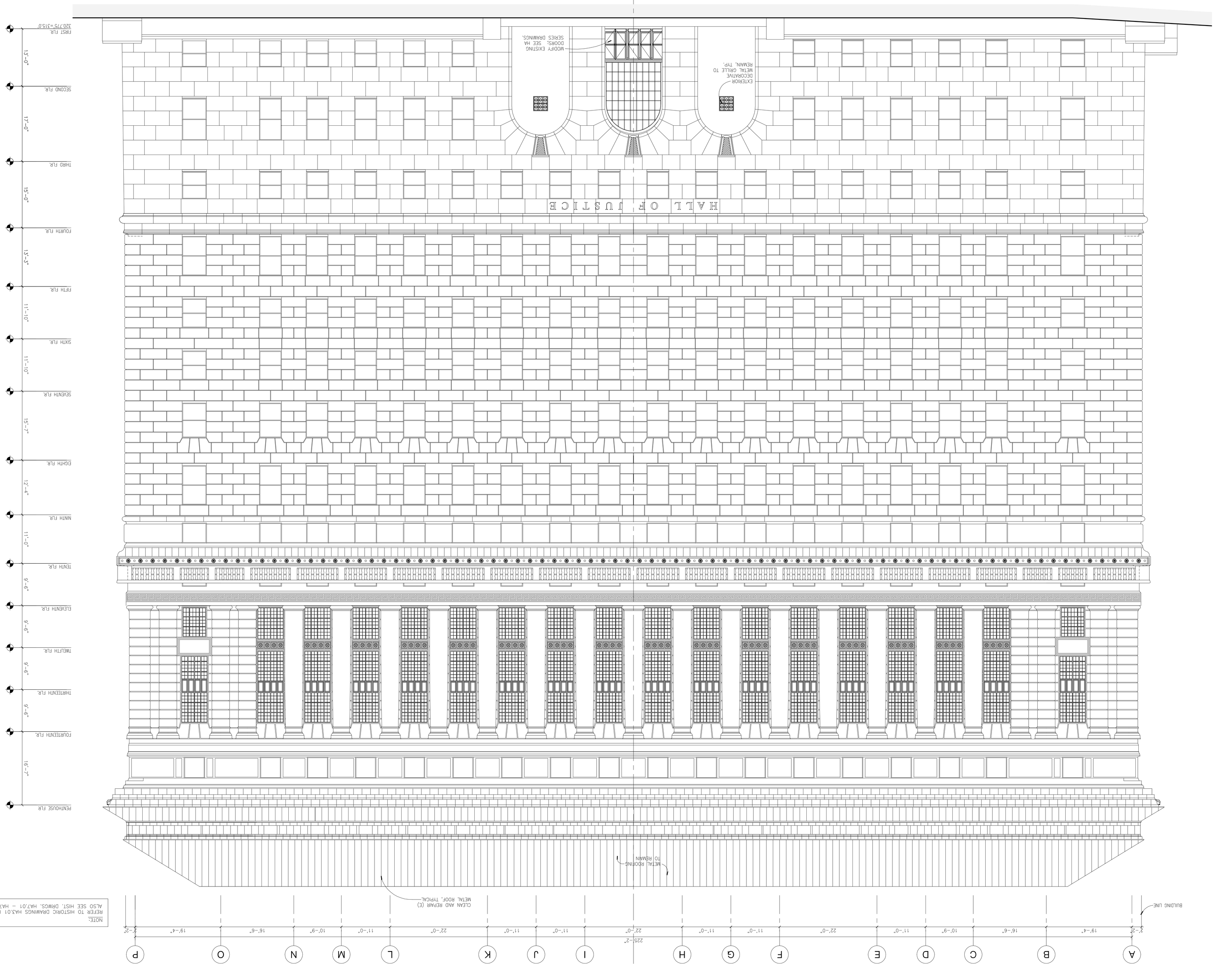

NOTE:
REFER TO HISTORIC DRAWINGS HA3.01 FOR WINDOW INFORMATION ALSO SEE HIST. DRWGS. HA7.01 – HA7.13 FOR ADDITIONAL INFO.

A3.01

SHEET NO.

JOB NO :

DATE :

SCALE : 1/8"=1'-0"

BUILDING ELEVATION (EAST)

DRAWING TITLE

REVISIONS

1	
2	
3	
4	
5	
6	

COUNTY OF LOS ANGELES

THE HALL OF JUSTICE

STRUCTURAL RETROFIT PHASE

SCOPING DOCUMENTS 100% SUBMISSION AUGUST 2010

CONSULTANT

NADEL Architects Inc.
1990 So. Bundy Dr.
Fourth Floor
Los Angeles, CA 90025
T. 310.826.2100
F. 310.826.0182
www.nadelarc.com

ALL DRAWINGS AND MATTER MATERIAL APPEARING HEREIN CONSTITUTE THE ORIGINAL AND UNPUBLISHED WORK OF THE ARCHITECT AND THE SAME MAY NOT BE DUPLICATED, USED OR DISCLOSED WITHOUT THE WRITTEN CONSENT OF THE ARCHITECT. COPYRIGHT: NADEL ARCHITECTS INC. ALL RIGHTS RESERVED.

BUILDING ELEVATION (WEST / BROADWAY STREET)

SCALE: 1/8"=1'-0"

1

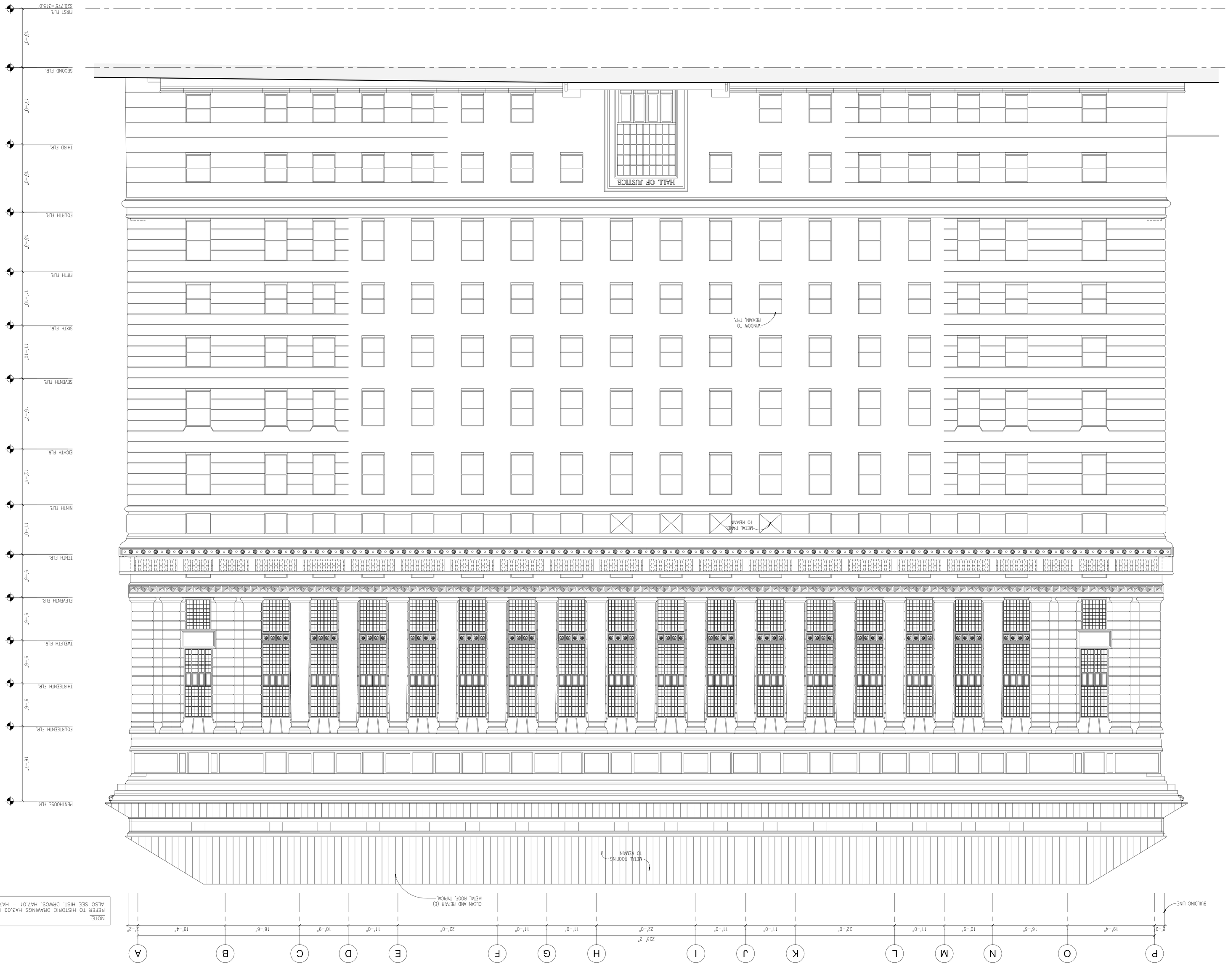

NOTE:
REFER TO HISTORIC DRAWINGS HA3.02 FOR WINDOW INFORMATION
ALSO SEE HIST. DRWGS. HA7.01 – HA7.13 FOR ADDITIONAL INFO.

SCOPING DOCUMENTS 100% SUBMISSION AUGUST 2010

BUILDING ELEVATION (WEST)

DRAWING TITLE

REVISIONS

1	
2	
3	
4	
5	
6	

CONSULTANT

NADEL Architects Inc.
1990 So. Bundy Dr.
Fourth Floor
Los Angeles, CA 90025
T. 310.826.2100
F. 310.826.0182
www.nadelarc.com

COUNTY OF LOS ANGELES

THE HALL OF JUSTICE

STRUCTURAL RETROFIT PHASE

SCALE : 1/8"=1'-0"

DATE :

JOB NO :

SHEET NO.

A3.02

ALL DRAWINGS AND MATERIAL APPEARING HEREIN CONSTITUTE THE ORIGINAL AND UNPUBLISHED WORK OF THE ARCHITECT AND THE SAME MAY NOT BE DUPLICATED, USED OR DISCLOSED WITHOUT THE WRITTEN CONSENT OF THE ARCHITECT. COPYRIGHT: NADEL ARCHITECTS INC. ALL RIGHTS RESERVED.

BUILDING ELEVATION (SOUTH / TEMPLE STREET)

SCALE: 1/8"=1'-0"

1

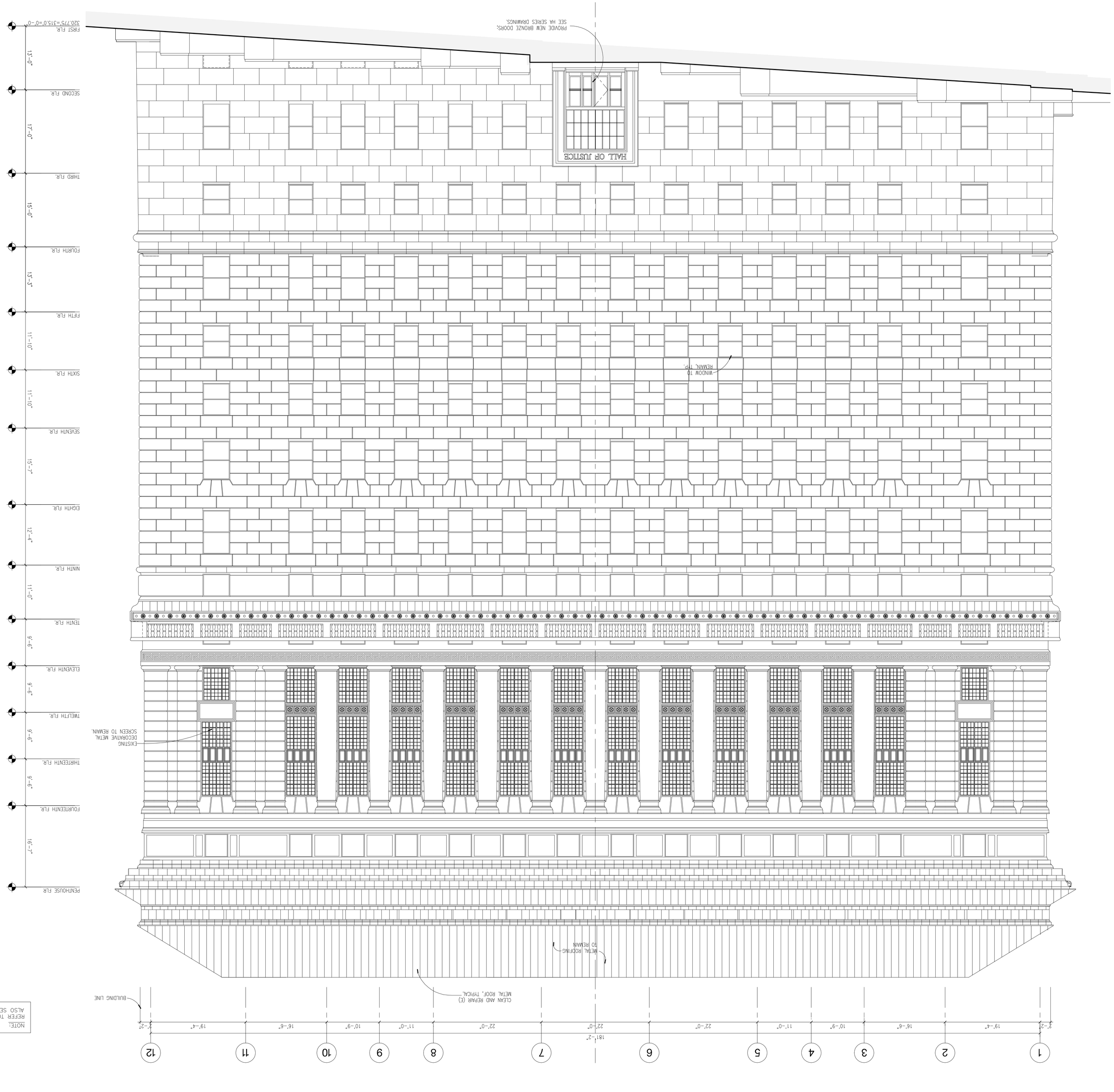

NOTE:
REFER TO HISTORIC DRAWINGS HA3.03 FOR WINDOW INFORMATION
ALSO SEE HIST. DRWGS. HA7.01 – HA7.13 FOR ADDITIONAL INFO.

SCOPING DOCUMENTS 100% SUBMISSION AUGUST 2010

BUILDING ELEVATION (SOUTH / TEMPLE STREET)

SCALE : 1/8"=1'-0"
DATE :
JOB NO :
SHEET NO.

A3.03

DRAWING TITLE

REVISIONS

CONSULTANT

NADEL Architects Inc.
1990 So. Bundy Dr.
Fourth Floor
Los Angeles, CA 90025
T. 310.826.2100
F. 310.826.0182
www.nadelarc.com

COUNTY OF LOS ANGELES

THE HALL OF JUSTICE

STRUCTURAL RETROFIT PHASE

ALL DRAWINGS AND MATERIAL APPEARING HEREIN CONSTITUTE THE ORIGINAL AND UNPUBLISHED WORK OF THE ARCHITECT AND THE SAME MAY NOT BE DUPLICATED, USED OR DISCLOSED WITHOUT THE WRITTEN CONSENT OF THE ARCHITECT. COPYRIGHT: NADEL ARCHITECTS INC. ALL RIGHTS RESERVED.

BUILDING ELEVATION (NORTH / ALISO STREET)

SCALE: 1/8"=1'-0"

1

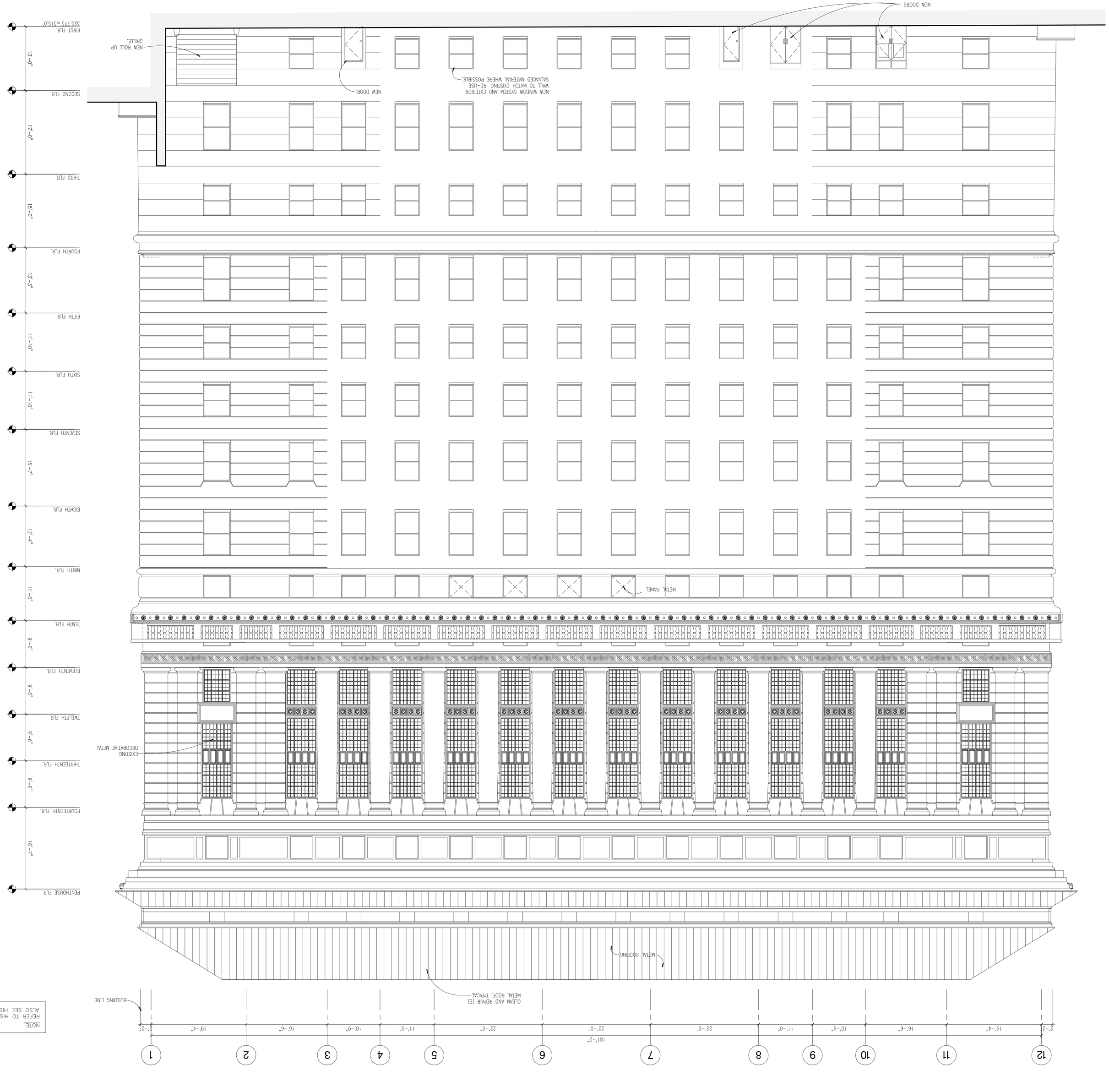

NOTE:
REFER TO HISTORIC DRAWINGS HA3.04 FOR WINDOW INFORMATION ALSO SEE HIST. DRWGS. HA7.01 – HA7.13 FOR ADDITIONAL INFO.

SCOPING DOCUMENTS
100% SUBMISSION
AUGUST 2010

BUILDING ELEVATION (NORTH)

DRAWING TITLE

REVISIONS

COUNTY OF LOS ANGELES
THE HALL OF JUSTICE
STRUCTURAL RETROFIT PHASE

CONSULTANT

NADEL
Architects Inc.

1990 So. Bundy Dr.
Fourth Floor
Los Angeles, CA 90025
T. 310.826.2100
F. 310.826.0182
www.nadelarc.com

SCALE : 1/8"=1'-0"
DATE :
JOB NO :
SHEET NO.

A3.04

ALL DRAWINGS AND MATTER MATERIAL APPEARING HEREIN CONSTITUTE THE ORIGINAL AND UNPUBLISHED WORK OF THE ARCHITECT AND THE SAME MAY NOT BE DUPLICATED, USED OR DISCLOSED WITHOUT THE WRITTEN CONSENT OF THE ARCHITECT. COPYRIGHT: NADEL ARCHITECTS INC. ALL RIGHTS RESERVED.

BUILDING SECTION (1)

SCALE: 1/8"=1'-0"

1

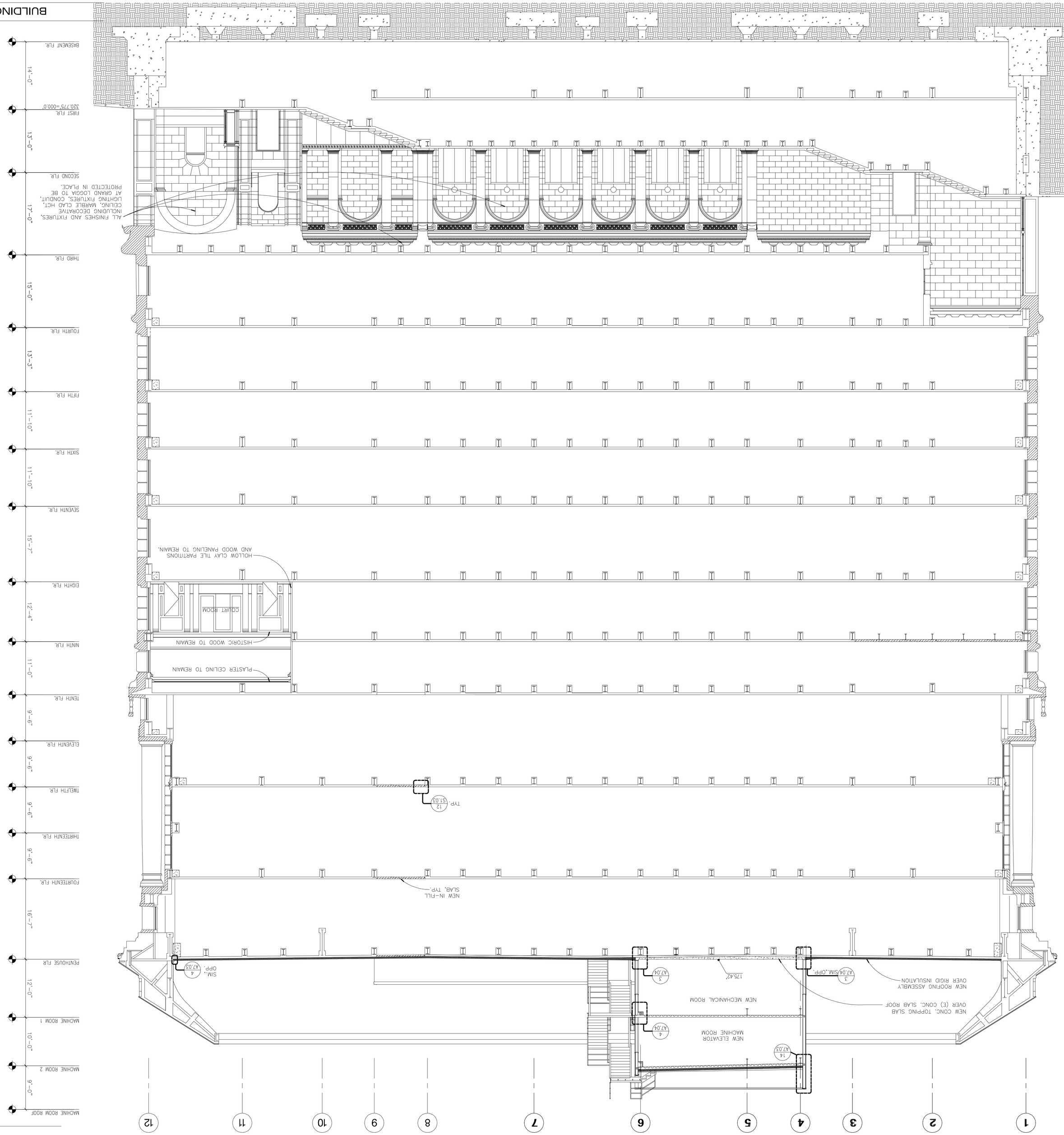

NOTES / WALL MATERIALS LEGEND

1. VERIFY ALL EXISTING MATERIALS, DIMENSIONS, FLOOR ELEVATIONS, AND BUILDING CONDITIONS PRIOR TO STARTING CONSTRUCTION
2. APPLY UNIFORM SELF-LEVELING CONCRETE FLOOR UNDERLAYMENT THROUGHOUT FLOOR AREA AS REQUIRED TO PROVIDE A LEVEL FLOOR SURFACE TO THE ELEVATIONS INDICATED.
3. PATCH OR FILL AND REPAIR OPENINGS AND SURFACES IN EXISTING SLAB AS REQUIRED TO MATCH ADJACENT SURFACE.
4. PROVIDE NEW OPENINGS IN EXISTING SLABS / WALLS REQUIRED FOR NEW BUILDING SYSTEM

EXISTING EXTERIOR STONE, TERRACOTTA / UNREINFORCED MASONARY TO REMAIN

EXISTING CONCRETE TO REMAIN

NEW CONCRETE IN-FILL FLOOR SLAB

SCOPING DOCUMENTS 100% SUBMISSION AUGUST 2010

BUILDING SECTION (1)

SCALE : 1/8"=1'-0"

DATE :

JOB NO :

SHEET NO.

A3.05

DRAWING TITLE

REVISIONS

4	4-01-06

THE HALL OF JUSTICE

STRUCTURAL RETROFIT PHASE

COUNTY OF LOS ANGELES

CONSULTANT

NADEL Architects Inc.
1990 So. Bundy Dr.
Fourth Floor
Los Angeles, CA 90025
T. 310.826.2100
F. 310.826.0182
www.nadelarc.com

ALL DRAWINGS AND MATTER MATERIAL APPEARING HEREIN CONSTITUTE THE ORIGINAL AND UNPUBLISHED WORK OF THE ARCHITECT AND THE SAME MAY NOT BE DUPLICATED, USED OR DISCLOSED WITHOUT THE WRITTEN CONSENT OF THE ARCHITECT. COPYRIGHT: NADEL ARCHITECTS INC. ALL RIGHTS RESERVED.

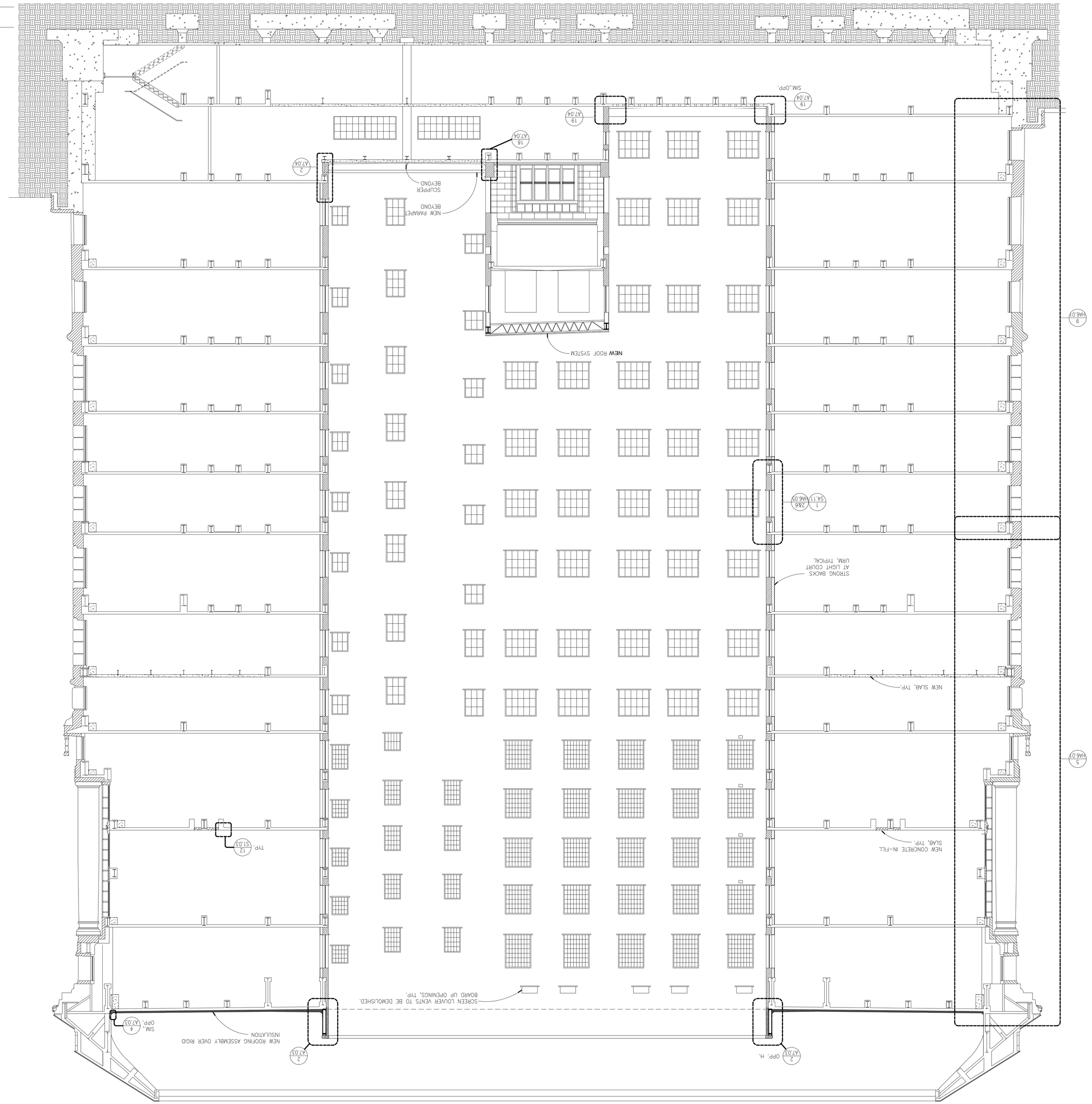

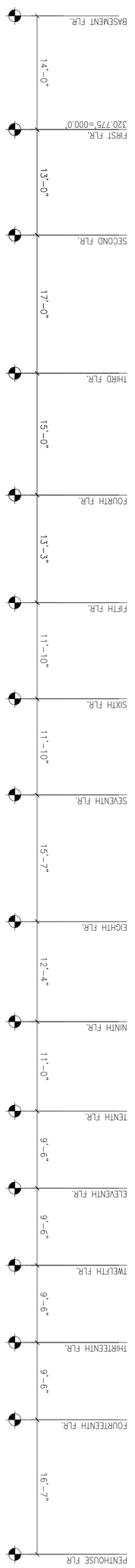

BUILDING SECTION (2)

SCALE: 1/8"=1'-0" | 1

NOTES / WALL MATERIALS LEGEND

1. VERIFY ALL EXISTING MATERIALS, DIMENSIONS, FLOOR ELEVATIONS, AND BUILDING CONDITIONS PRIOR TO STARTING CONSTRUCTION.
2. APPLY UNIFORM SELF-LEVELING CONCRETE FLOOR UNDERLAYMENT THROUGHOUT FLOOR AREA AS REQUIRED TO PROVIDE A LEVEL FLOOR SURFACE TO THE ELEVATIONS INDICATED.
3. PATCH OR FILL AND REPAIR OPENINGS AND SURFACES IN EXISTING SLAB AS REQUIRED TO MATCH ADJACENT SURFACE.
4. PROVIDE NEW OPENINGS IN EXISTING SLABS / WALLS REQUIRED FOR NEW BUILDING SYSTEM

NEW CONCRETE IN-FILL FLOOR SLAB
EXISTING CONCRETE TO REMAIN
EXISTING EXTERIOR STONE, TERRACOTTA / UNREINFORCED MASONARY TO REMAIN

NADEL Architects Inc.
1990 So. Bundy Dr.
Fourth Floor
Los Angeles, CA 90025
T. 310.826.2100
F. 310.826.0182
www.nadelarc.com

CONSULTANT

REVISIONS

DRAWING TITLE

BUILDING SECTION (2)

SCALE : 1/8"=1'-0"
DATE :
JOB NO :
SHEET NO. **A3.06**

COUNTY OF LOS ANGELES
THE HALL OF JUSTICE
STRUCTURAL RETROFIT PHASE

SCOPING DOCUMENTS 100% SUBMISSION AUGUST 2010

ALL DRAWINGS AND WRITTEN MATERIAL APPEARING HEREIN CONSTITUTE THE ORIGINAL AND UNPUBLISHED WORK OF THE ARCHITECT AND THE SAME MAY NOT BE DUPLICATED, USED OR DISCLOSED WITHOUT THE WRITTEN CONSENT OF THE ARCHITECT. COPYRIGHT: NADEL ARCHITECTS INC. ALL RIGHTS RESERVED.

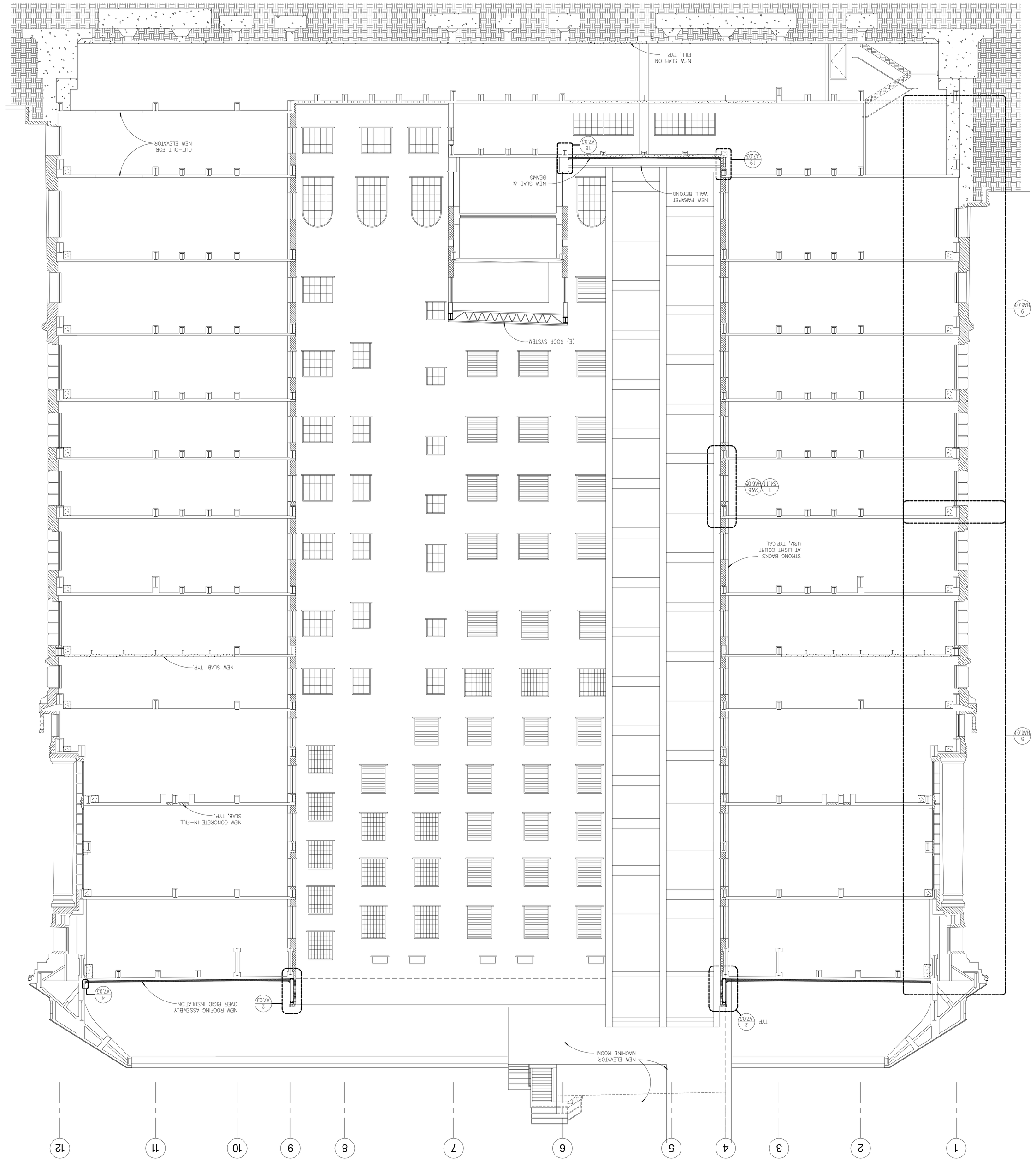

BUILDING SECTION (3)

SCALE: 1/8"=1'-0"

1

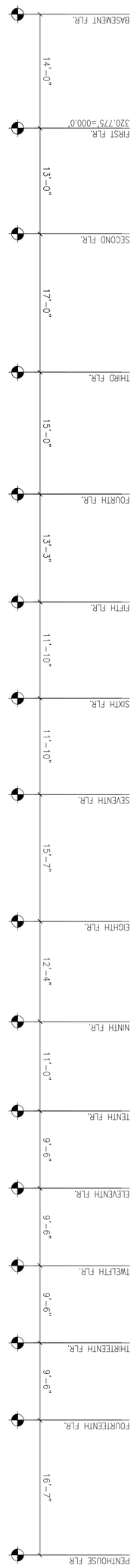

NOTES / WALL MATERIALS LEGEND

1. VERIFY ALL EXISTING MATERIALS, DIMENSIONS, FLOOR ELEVATIONS, AND BUILDING CONDITIONS PRIOR TO STARTING CONSTRUCTION
2. APPLY UNIFORM SELF-LEVELING CONCRETE FLOOR UNDERLAYMENT THROUGHOUT FLOOR AREA AS REQUIRED TO PROVIDE A LEVEL FLOOR SURFACE TO THE ELEVATIONS INDICATED.
3. PATCH OR FILL AND REPAIR OPENINGS AND SURFACES IN EXISTING SLAB AS REQUIRED TO MATCH ADJACENT SURFACE.
4. PROVIDE NEW OPENINGS IN EXISTING SLABS / WALLS REQUIRED FOR NEW BUILDING SYSTEM

- EXISTING EXTERIOR STONE, TERRACOTTA / UNREINFORCED MASONARY TO REMAIN
- EXISTING CONCRETE TO REMAIN
- NEW CONCRETE IN-FILL FLOOR SLAB

NADEL Architects Inc.
1990 So. Bundy Dr.
Fourth Floor
Los Angeles, CA 90025
T. 310.826.2100
F. 310.826.0182
www.nadelarc.com

CONSULTANT

REVISIONS

DRAWING TITLE

BUILDING SECTION (3)

SCALE : 1/8"=1'-0"
DATE :
JOB NO :
SHEET NO. **A3.07**

SCOPING DOCUMENTS 100% SUBMISSION AUGUST 2010

COUNTY OF LOS ANGELES

THE HALL OF JUSTICE

STRUCTURAL RETROFIT PHASE

ALL DRAWINGS AND MATTER MATERIAL APPEARING HEREIN CONSTITUTE THE ORIGINAL AND UNPUBLISHED WORK OF THE ARCHITECT AND THE SAME MAY NOT BE DUPLICATED, USED OR DISCLOSED WITHOUT THE WRITTEN CONSENT OF THE ARCHITECT. COPYRIGHT: NADEL ARCHITECTS INC. ALL RIGHTS RESERVED.

BUILDING SECTION (4)

SCALE: 1/8"=1'-0"

1

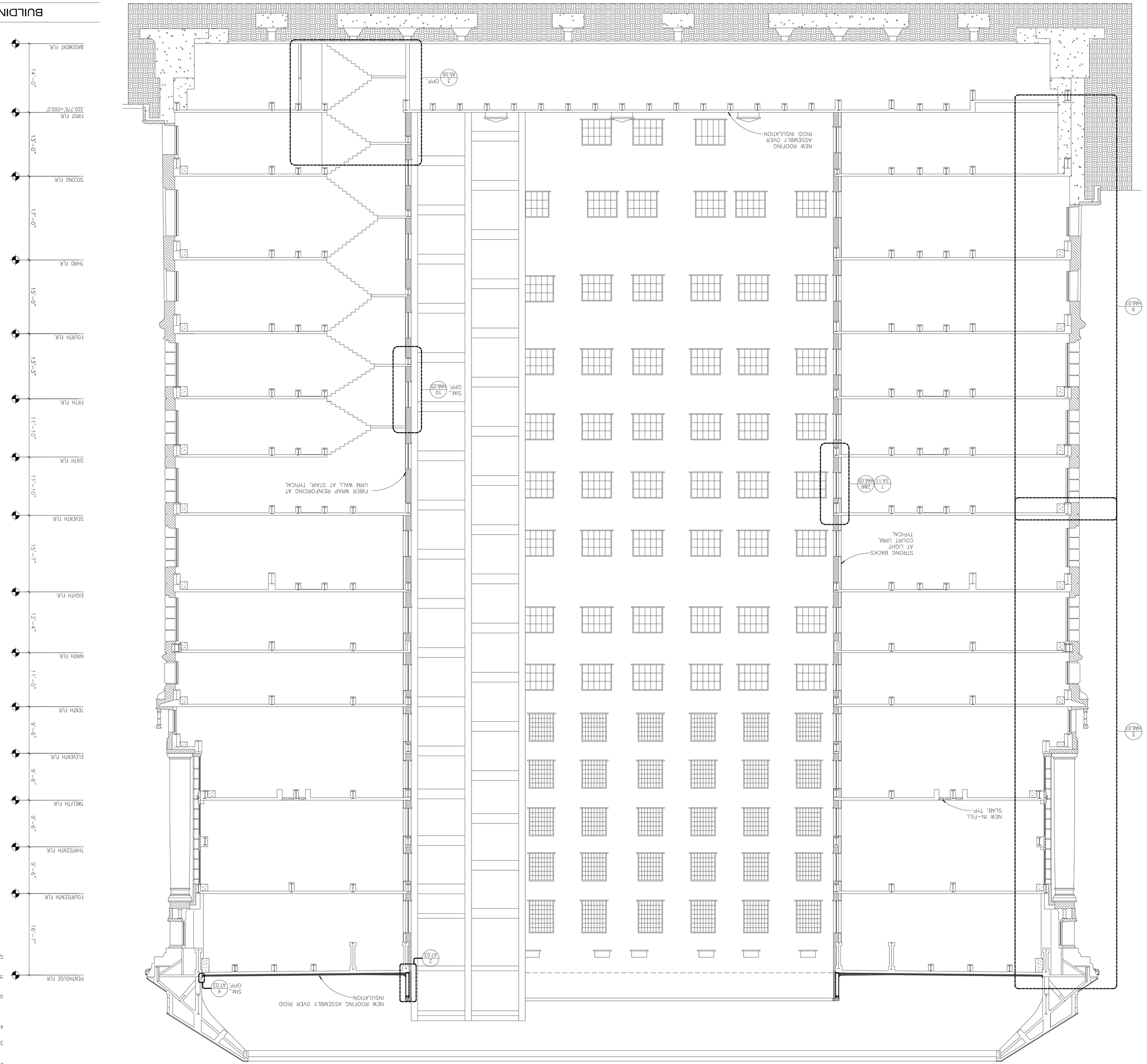

NOTES / WALL MATERIALS LEGEND

1. VERIFY ALL EXISTING MATERIALS, DIMENSIONS, FLOOR ELEVATIONS, AND BUILDING CONDITIONS PRIOR TO STARTING CONSTRUCTION
2. APPLY UNIFORM SELF-LEVELING CONCRETE FLOOR UNDERLAYMENT THROUGHOUT FLOOR AREA AS REQUIRED TO PROVIDE A LEVEL FLOOR SURFACE TO THE ELEVATIONS INDICATED.
3. PATCH OR FILL AND REPAIR OPENINGS AND SURFACES IN EXISTING SLAB AS REQUIRED TO MATCH ADJACENT SURFACE.
4. PROVIDE NEW OPENINGS IN EXISTING SLABS / WALLS REQUIRED FOR NEW BUILDING SYSTEM

EXISTING EXTERIOR STONE, TERRACOTTA / UNREINFORCED MASONARY TO REMAIN

EXISTING CONCRETE TO REMAIN

NEW CONCRETE IN-FILL FLOOR SLAB

NADEL
Architects Inc.

1990 So. Bundy Dr.
Fourth Floor
Los Angeles, CA 90025
T. 310.826.2100
F. 310.826.0182
www.nadelarc.com

CONSULTANT

DRAWING TITLE

REVISIONS

COUNTY OF LOS ANGELES
THE HALL OF JUSTICE
STRUCTURAL RETROFIT PHASE

SCOPING DOCUMENTS 100% SUBMISSION AUGUST 2010

SCALE : 1/8"=1'-0"
DATE :
JOB NO :
SHEET NO.

A3.08

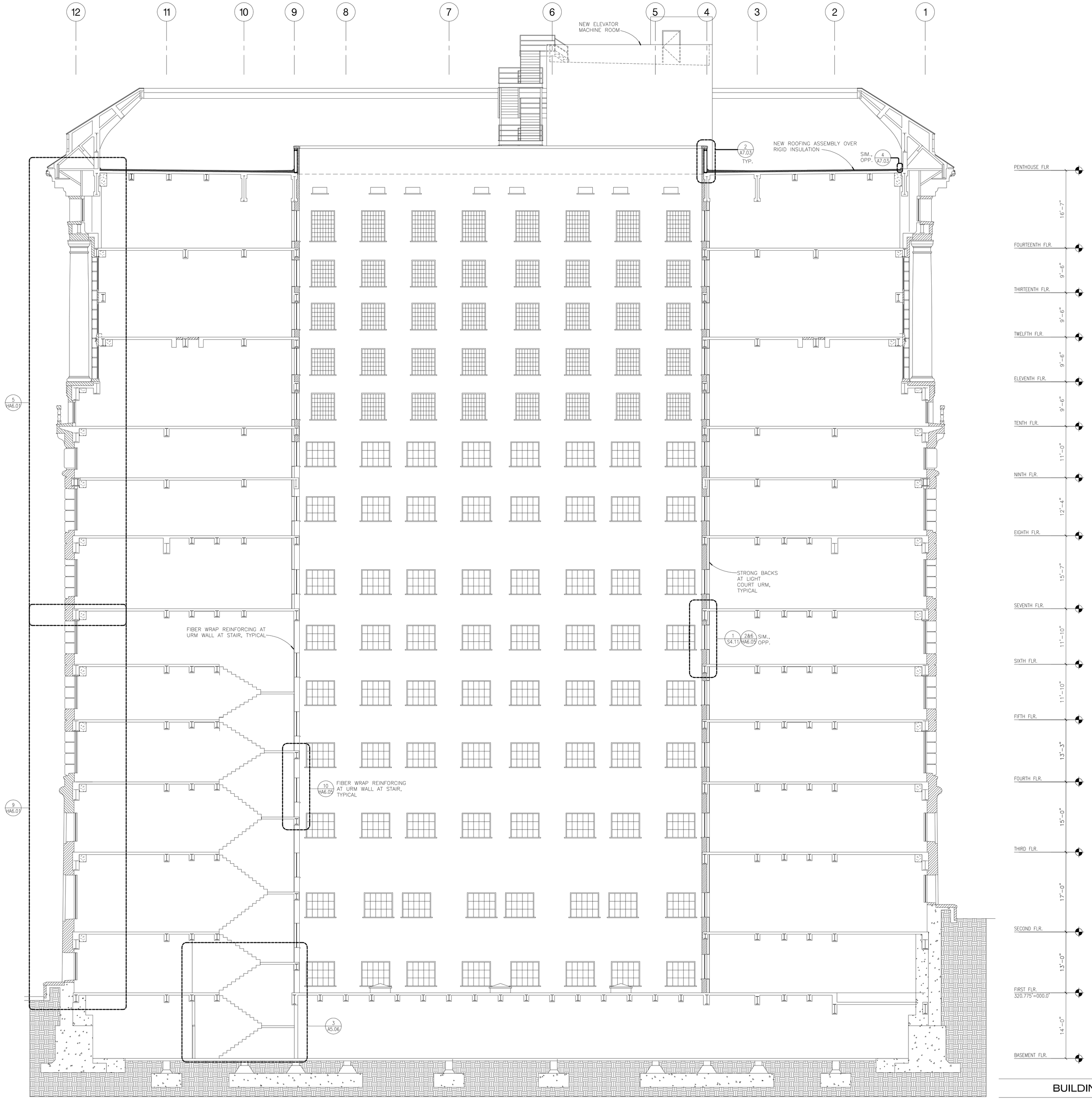

NOTES / WALL MATERIALS LEGEND

1. VERIFY ALL EXISTING MATERIALS, DIMENSIONS, FLOOR ELEVATIONS, AND BUILDING CONDITIONS PRIOR TO STARTING CONSTRUCTION
2. APPLY UNIFORM SELF-LEVELING CONCRETE FLOOR UNDERLAYMENT THROUGHOUT FLOOR AREA AS REQUIRED TO PROVIDE A LEVEL FLOOR SURFACE TO THE ELEVATIONS INDICATED.
3. PATCH OR FILL AND REPAIR OPENINGS AND SURFACES IN EXISTING SLAB AS REQUIRED TO MATCH ADJACENT SURFACE.
4. PROVIDE NEW OPENINGS IN EXISTING SLABS / WALLS REQUIRED FOR NEW BUILDING SYSTEM

EXISTING EXTERIOR STONE, TERRACOTTA / UNREINFORCED MASONARY TO REMAIN

EXISTING CONCRETE TO REMAIN

NEW CONCRETE IN-FILL FLOOR SLAB

BUILDING SECTION (5) | SCALE: 1/8"=1'-0" | 1

NADEL Architects Inc.

1990 So. Bundy Dr.
Fourth Floor
Los Angeles, CA 90025

T. 310.826.2100
F. 310.826.0182

www.nadelarc.com

CONSULTANT

COUNTY OF LOS ANGELES
THE HALL OF JUSTICE
STRUCTURAL RETROFIT PHASE

REVISIONS

DRAWING TITLE

BUILDING SECTION (5)

SCOPING DOCUMENTS 100% SUBMISSION AUGUST 2010

SCALE : 1/8"=1'-0"
DATE :
JOB NO :
SHEET NO.
A3.09

ALL DRAWINGS AND WRITTEN MATERIAL APPEARING HEREIN CONSTITUTE THE ORIGINAL AND UNPUBLISHED WORK OF THE ARCHITECT AND THE SAME MAY NOT BE DUPLICATED, USED OR DISCLOSED WITHOUT THE WRITTEN CONSENT OF THE ARCHITECT. COPYRIGHT: NADEL ARCHITECTS INC. ALL RIGHTS RESERVED.

ALL DRAWINGS AND WRITTEN MATERIAL APPEARING HEREIN CONSTITUTE THE ORIGINAL AND UNPUBLISHED WORK OF THE ARCHITECT AND THE SAME MAY NOT BE DUPLICATED, USED OR DISCLOSED WITHOUT THE WRITTEN CONSENT OF THE ARCHITECT. COPYRIGHT: NADEL ARCHITECTS INC. ALL RIGHTS RESERVED.

BUILDING SECTION (6)

SCALE: 1/8"=1'-0"

1

SCOPING DOCUMENTS 100% SUBMISSION AUGUST 2010

SCALE : 1/8"=1'-0"

DATE :

JOB NO :

SHEET NO. **A3.10**

DRAWING TITLE

REVISIONS

CONSULTANT

1990 So. Bundy Dr.
Fourth Floor
Los Angeles, CA 90025
T. 310.826.2100
F. 310.826.0182
www.nadelarc.com

NADEL Architects Inc.

COUNTY OF LOS ANGELES

THE HALL OF JUSTICE

STRUCTURAL RETROFIT PHASE

NOTES / WALL MATERIALS LEGEND

1. VERIFY ALL EXISTING MATERIALS, DIMENSIONS, FLOOR ELEVATIONS, AND BUILDING CONDITIONS PRIOR TO STARTING CONSTRUCTION
2. APPLY UNIFORM SELF-LEVELING CONCRETE FLOOR UNDERLAYMENT THROUGHOUT FLOOR AREA AS REQUIRED TO PROVIDE A LEVEL FLOOR SURFACE TO THE ELEVATIONS INDICATED.
3. PATCH OR FILL AND REPAIR OPENINGS AND SURFACES IN EXISTING SLAB AS REQUIRED TO MATCH ADJACENT SURFACE.
4. PROVIDE NEW OPENINGS IN EXISTING SLABS / WALLS REQUIRED FOR NEW BUILDING SYSTEM

EXISTING EXTERIOR STONE, TERRACOTTA / UNREINFORCED MASONARY TO REMAIN

EXISTING CONCRETE TO REMAIN

NEW CONCRETE IN-FILL FLOOR SLAB

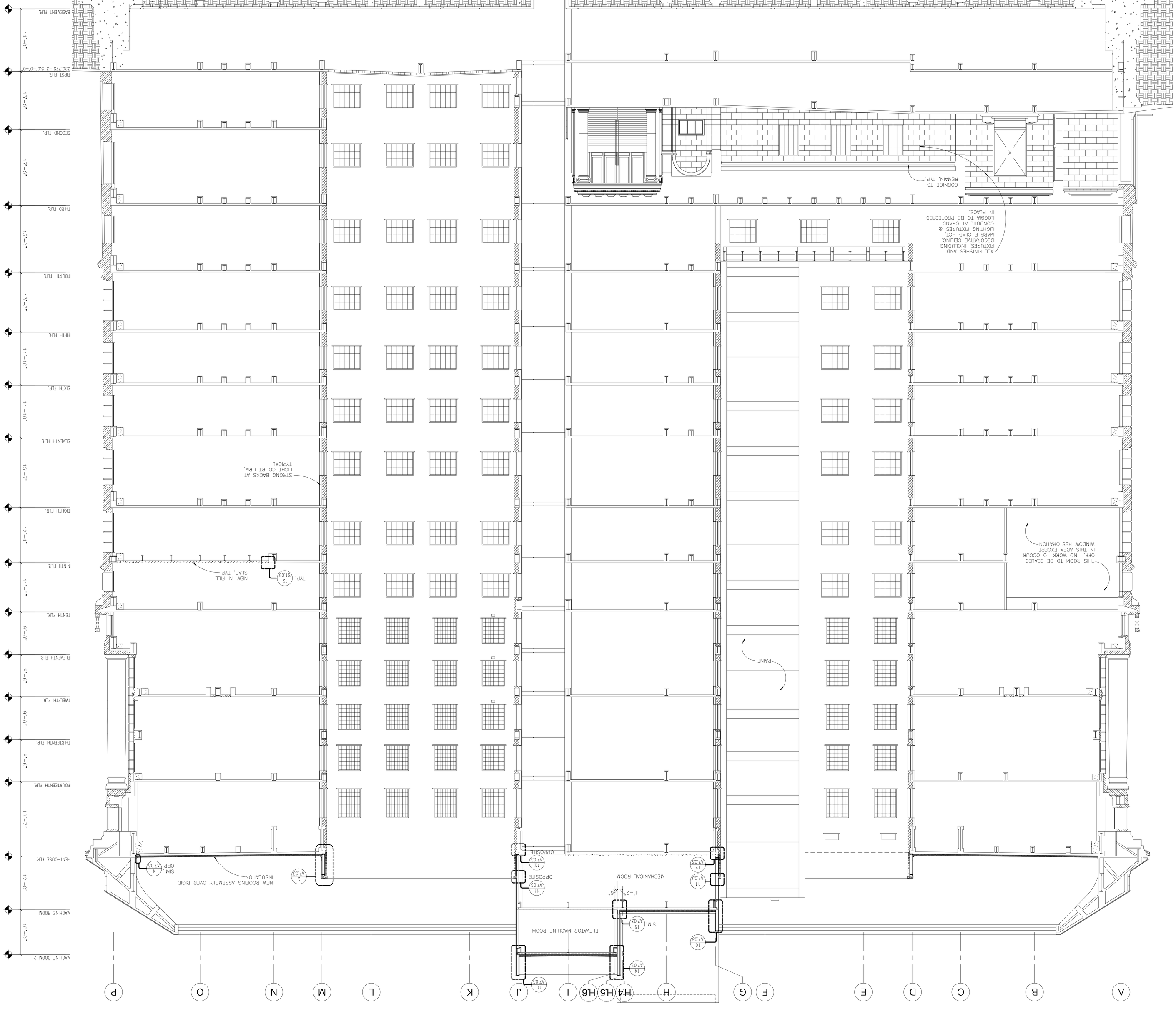

BUILDING SECTION (7)

SCALE: 1/8"=1'-0"

1

NOTES / WALL MATERIALS LEGEND

1. VERIFY ALL EXISTING MATERIALS, DIMENSIONS, FLOOR ELEVATIONS, AND BUILDING CONDITIONS PRIOR TO STARTING CONSTRUCTION
2. APPLY UNIFORM SELF-LEVELING CONCRETE FLOOR UNDERLAYMENT THROUGHOUT FLOOR AREA AS REQUIRED TO PROVIDE A LEVEL FLOOR SURFACE TO THE ELEVATIONS INDICATED.
3. PATCH OR FILL AND REPAIR OPENINGS AND SURFACES IN EXISTING SLAB AS REQUIRED TO MATCH ADJACENT SURFACE.
4. PROVIDE NEW OPENINGS IN EXISTING SLABS / WALLS REQUIRED FOR NEW BUILDING SYSTEM

EXISTING EXTERIOR STONE, TERRACOTTA / UNREINFORCED MASONARY TO REMAIN

EXISTING CONCRETE TO REMAIN

NEW CONCRETE IN-FILL FLOOR SLAB

NADEL Architects Inc.

1990 So. Bundy Dr.
Fourth Floor
Los Angeles, CA 90025

T. 310.826.2100
F. 310.826.0182

www.nadelarc.com

CONSULTANT

COUNTY OF LOS ANGELES

THE HALL OF JUSTICE

STRUCTURAL RETROFIT PHASE

REVISIONS

1	
2	
3	
4	
5	
6	

DRAWING TITLE

BUILDING SECTION (7)

SCOPING DOCUMENTS 100% SUBMISSION AUGUST 2010

SCALE : 1/8"=1'-0"
DATE :
JOB NO :
SHEET NO.

A3.11

ALL DRAWINGS AND WRITTEN MATERIAL APPEARING HEREIN CONSTITUTE THE ORIGINAL AND UNPUBLISHED WORK OF THE ARCHITECT AND THE SAME MAY NOT BE DUPLICATED, USED OR DISCLOSED WITHOUT THE WRITTEN CONSENT OF THE ARCHITECT. COPYRIGHTS NADEL ARCHITECTS INC. ALL RIGHTS RESERVED.

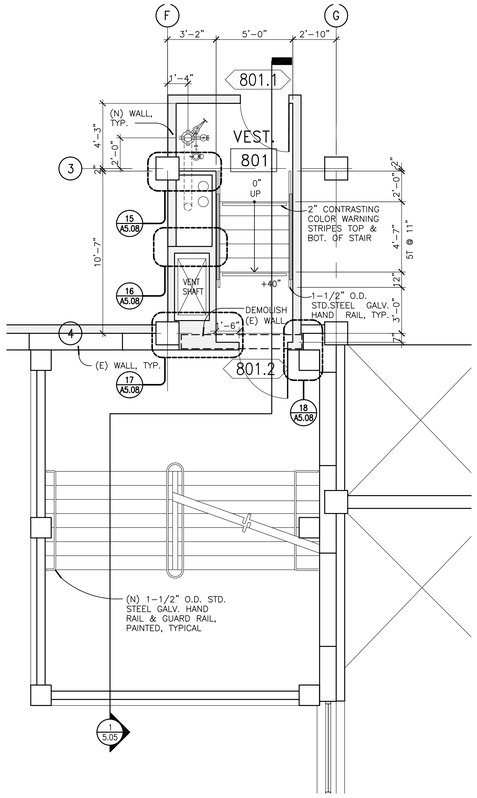

8TH FLOOR | SCALE: 1/4"=1'-0" | 8

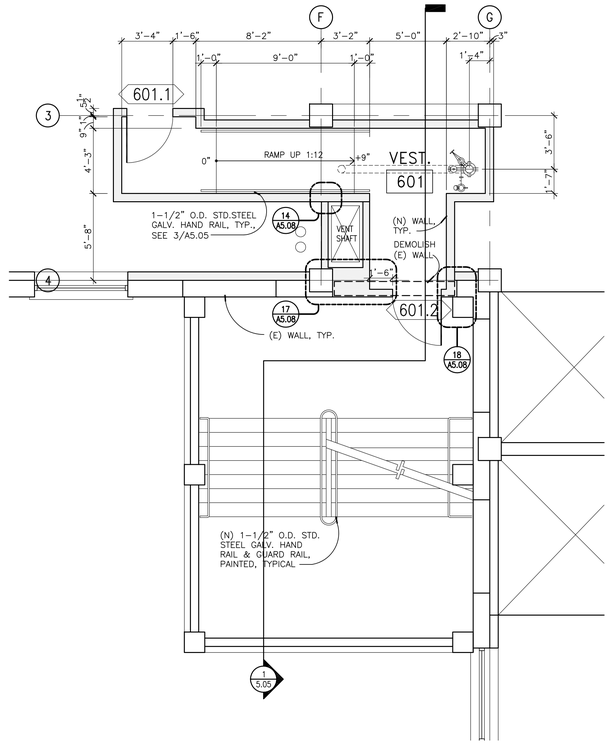

6TH FLOOR | SCALE: 1/4"=1'-0" | 6

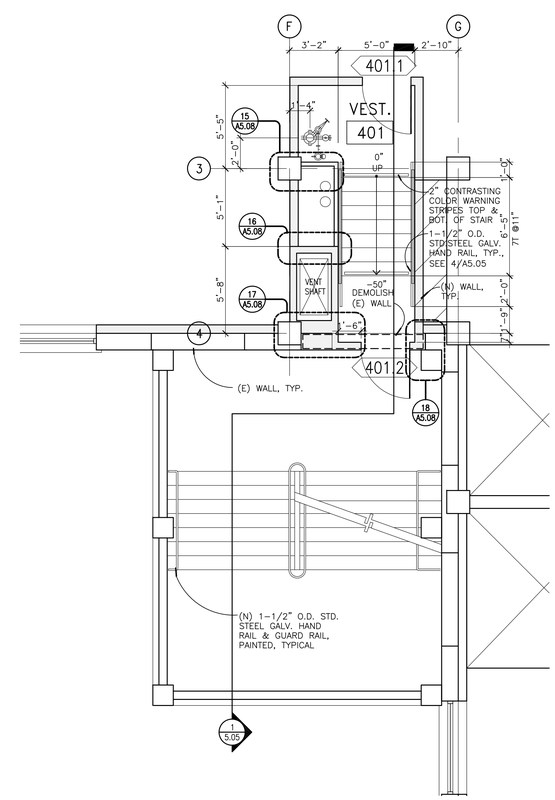

4TH FLOOR | SCALE: 1/4"=1'-0" | 4

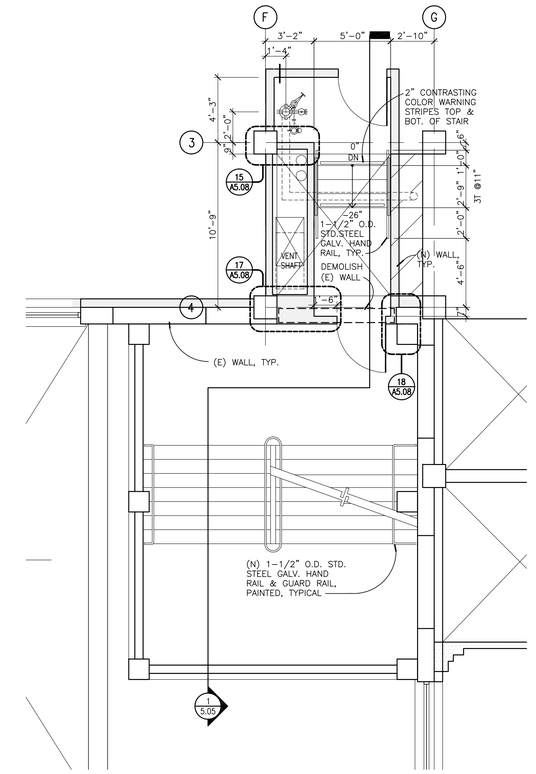

2ND FLOOR | SCALE: 1/4"=1'-0" | 2

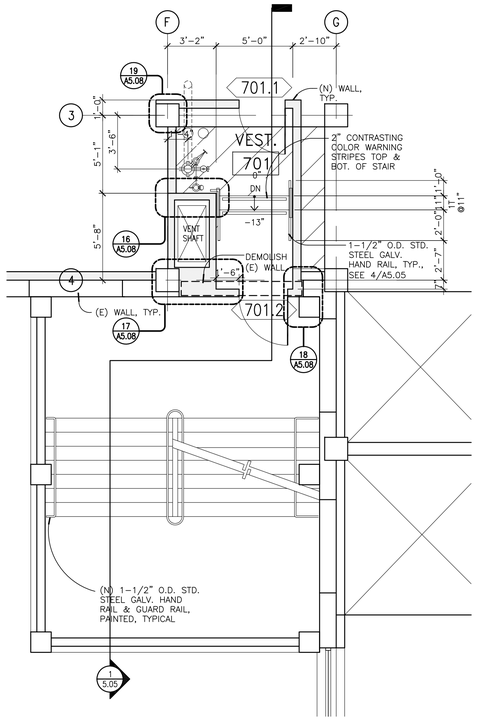

7TH FLOOR | SCALE: 1/4"=1'-0" | 7

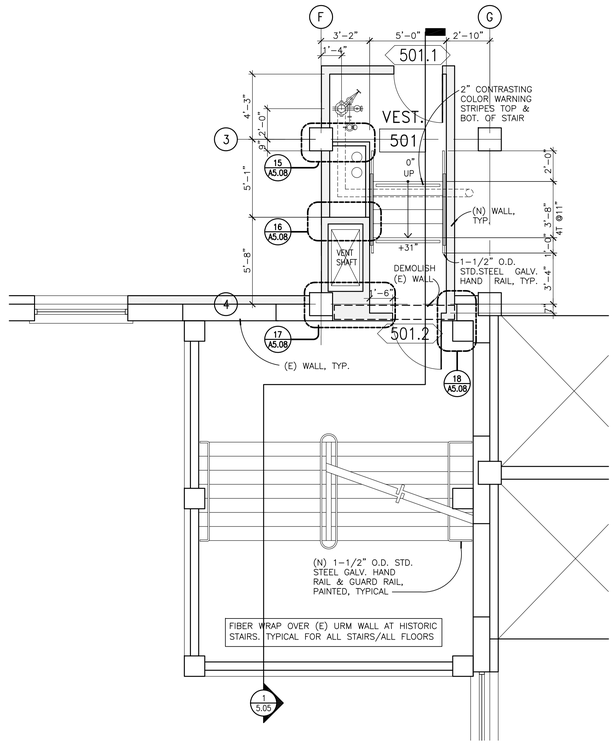

5TH FLOOR | SCALE: 1/4"=1'-0" | 5

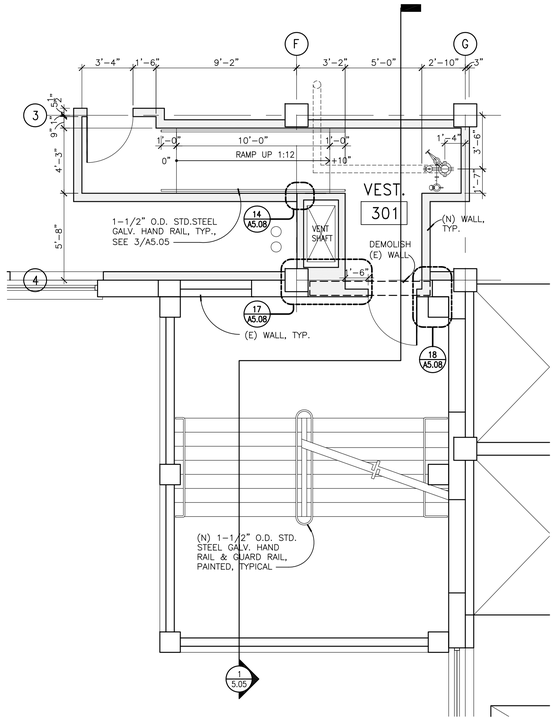

3TH FLOOR | SCALE: 1/4"=1'-0" | 3

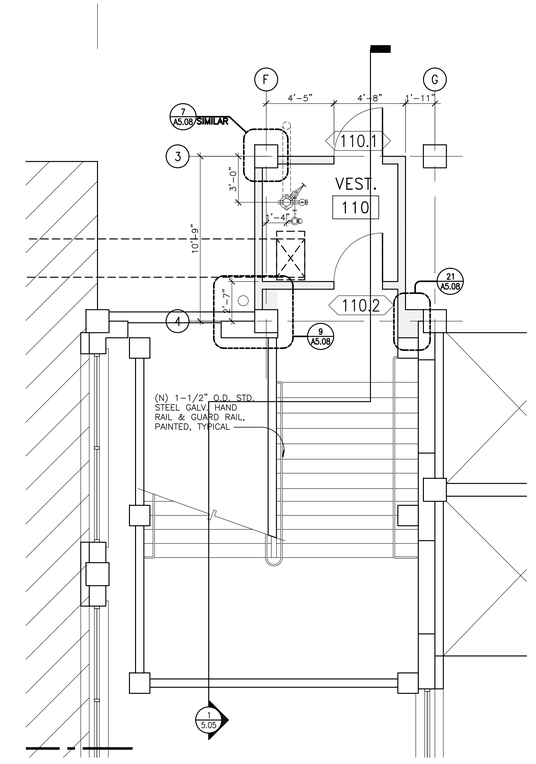

1ST FLOOR | SCALE: 1/4"=1'-0" | 1

NADEL
Architects Inc.

1990 So. Bundy Dr.
Fourth Floor
Los Angeles, CA 90025

T. 310.826.2100
F. 310.826.0182

www.nadelarc.com

CONSULTANT

COUNTY OF LOS ANGELES
THE HALL OF JUSTICE
STRUCTURAL RETROFIT PHASE

REVISIONS

DRAWING TITLE

ENLARGED STAIR A PLANS

SCOPING DOCUMENTS | 100% SUBMISSION | AUGUST 2010

SCALE : 1/4"=1'-0"
DATE :
JOB NO :
SHEET NO.

A5.01

ALL DRAWINGS AND WRITTEN MATERIAL APPEARING HEREIN CONSTITUTE THE ORIGINAL AND UNPUBLISHED WORK OF THE ARCHITECT AND THE SAME MAY NOT BE DUPLICATED, USED OR DISCLOSED WITHOUT THE WRITTEN CONSENT OF THE ARCHITECT. COPYRIGHT: NADEL ARCHITECTS INC. ALL RIGHTS RESERVED.

SCALE: 1/4"=1'-0" 11

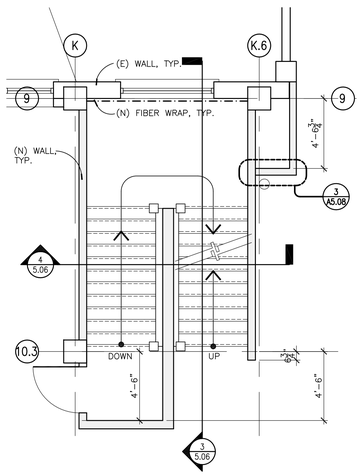

STAIR #1 @ 1ST FLOOR | SCALE: 1/4"=1'-0" | 10

SCALE: 1/4"=1'-0" 8

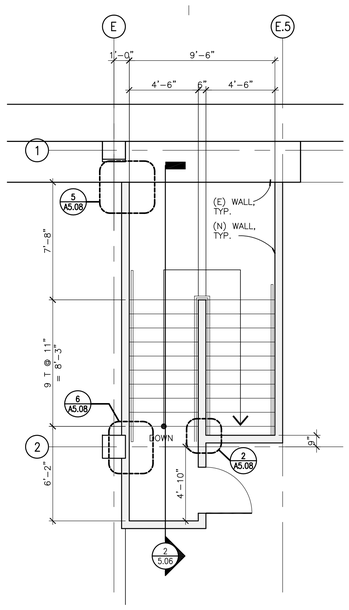

STAIR #5 @ 1ST FLOOR | SCALE: 1/4"=1'-0" | 7

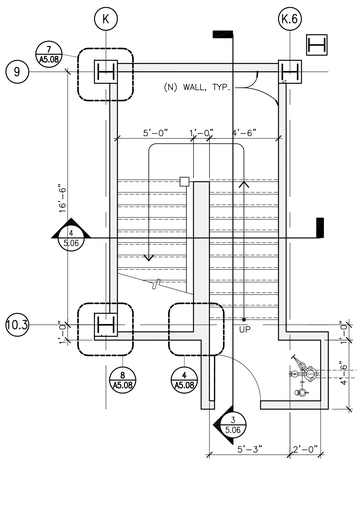

STAIR #1 @ BASEMENT | SCALE: 1/4"=1'-0" | 9

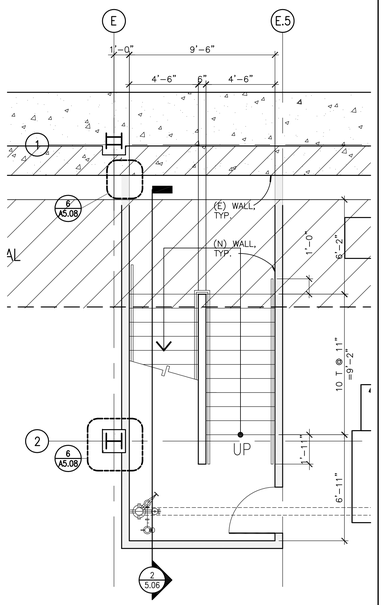

STAIR #5 @ BASEMENT | SCALE: 1/4"=1'-0" | 6

SCALE: 1/4"=1'-0" 4

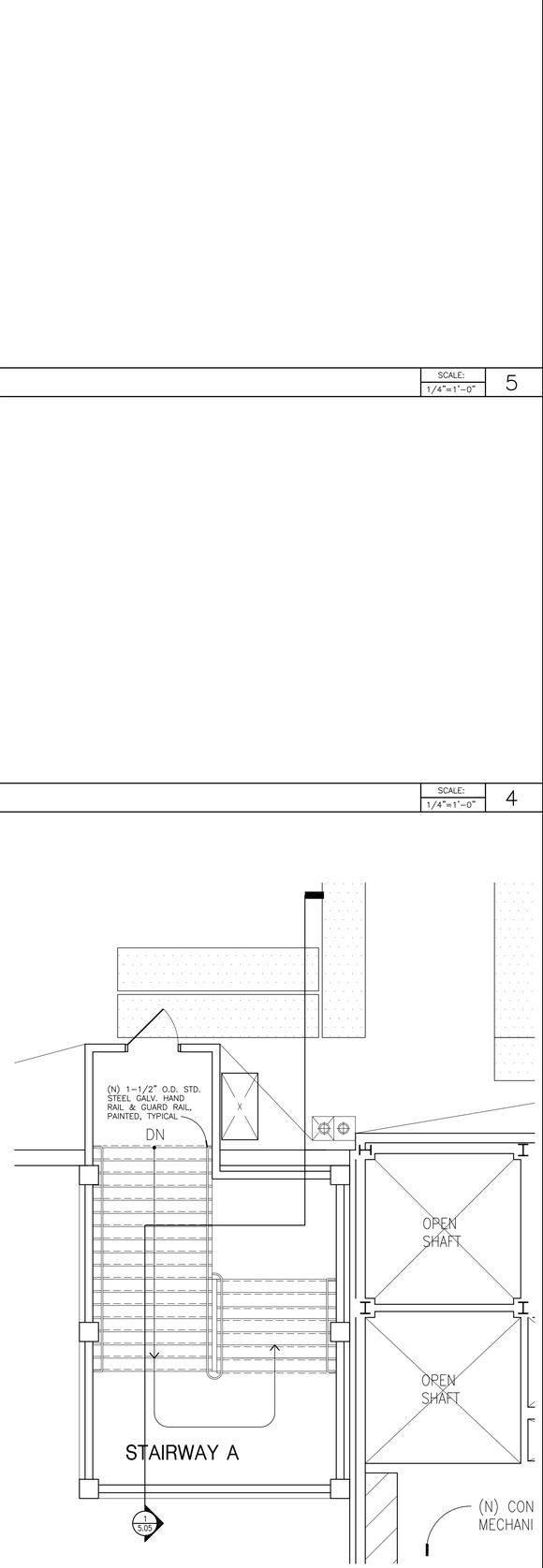

PENTHOUSE LEVEL | SCALE: 1/4"=1'-0" | 3

SCALE: 1/4"=1'-0" 2

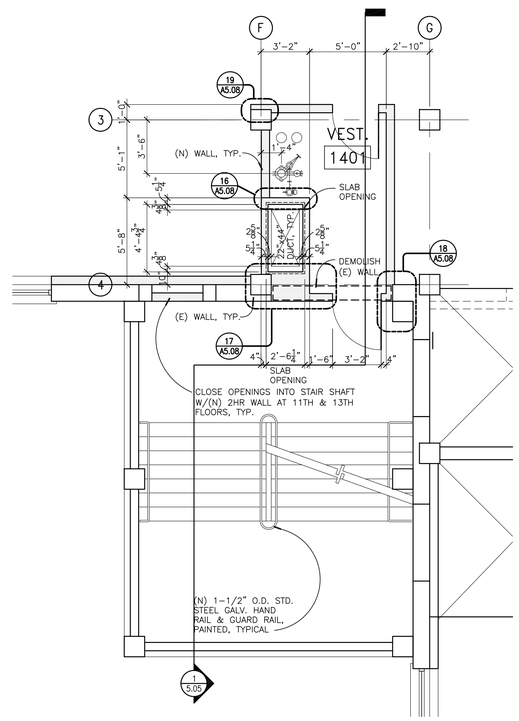

10TH, 12TH, & 14TH FLOOR | SCALE: 1/4"=1'-0" | 2

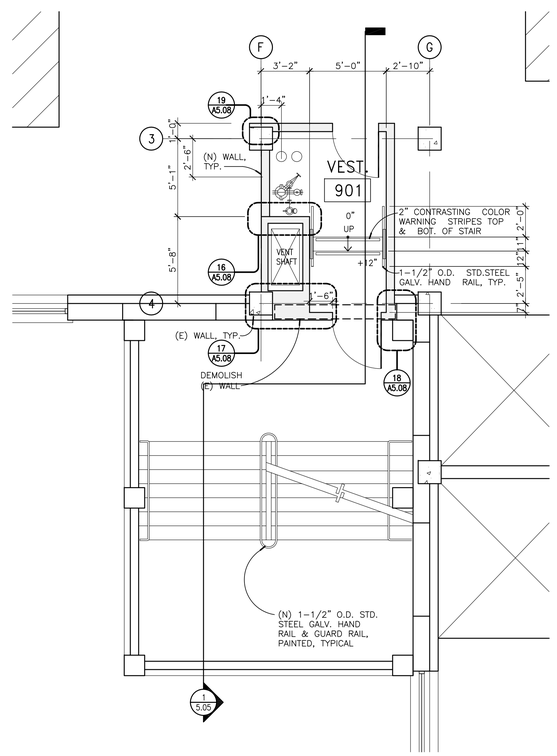

9TH FLOOR | SCALE: 1/4"=1'-0" | 1

NADEL Architects Inc.

1990 So. Bundy Dr.
Fourth Floor
Los Angeles, CA 90025

T. 310.826.2100
F. 310.826.0182

www.nadelarc.com

CONSULTANT

COUNTY OF LOS ANGELES

THE HALL OF JUSTICE

STRUCTURAL RETROFIT PHASE

REVISIONS

DRAWING TITLE

ENLARGED STAIR A, 1, & 5 PLANS, SECTIONS,& DETAILS

SCOPING DOCUMENTS 100% SUBMISSION AUGUST 2010

SCALE : 1/4"=1'-0"
DATE :
JOB NO :
SHEET NO.

A5.02

ALL DRAWINGS AND WRITTEN MATERIAL APPEARING HEREIN CONSTITUTE THE ORIGINAL AND UNPUBLISHED WORK OF THE ARCHITECT AND THE SAME MAY NOT BE DUPLICATED, USED OR DISCLOSED WITHOUT THE WRITTEN CONSENT OF THE ARCHITECT. COPYRIGHT: NADEL ARCHITECTS INC. ALL RIGHTS RESERVED.

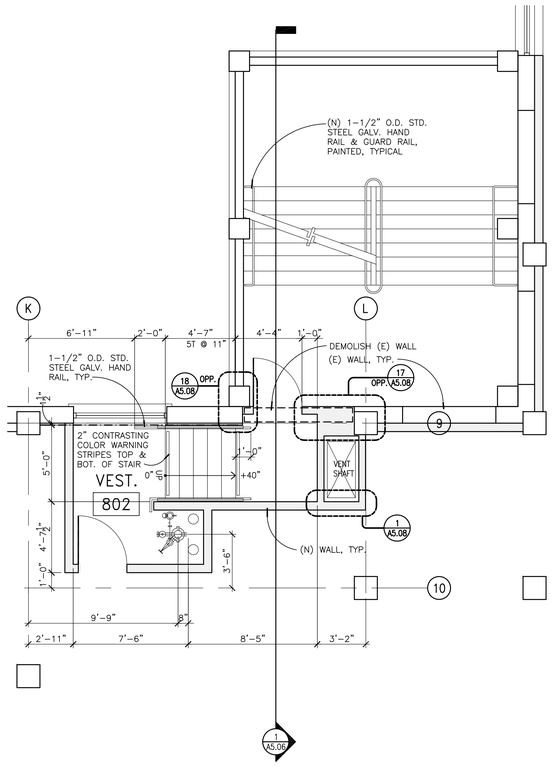

8TH FLOOR | SCALE: 1/4"=1'–0" | 8

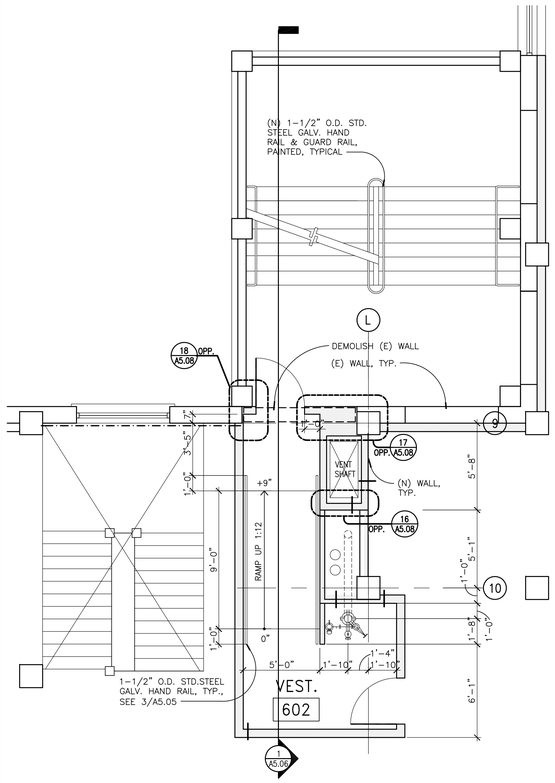

6TH FLOOR | SCALE: 1/4"=1'–0" | 6

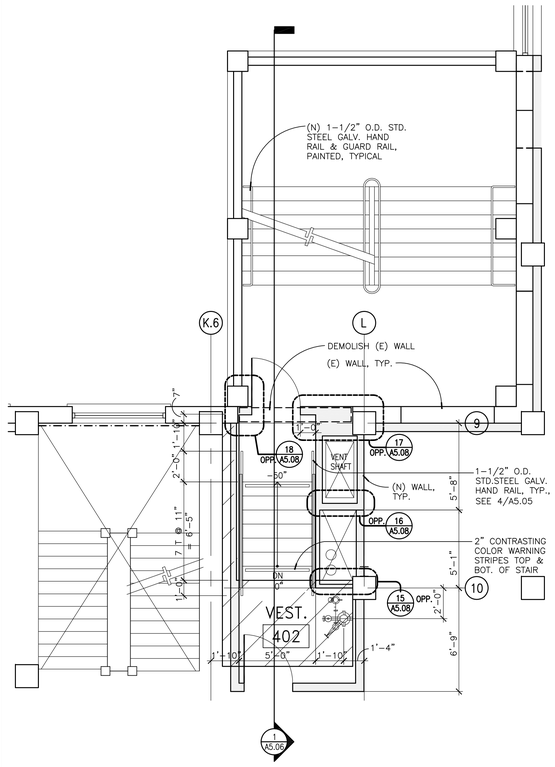

4TH FLOOR | SCALE: 1/4"=1'–0" | 4

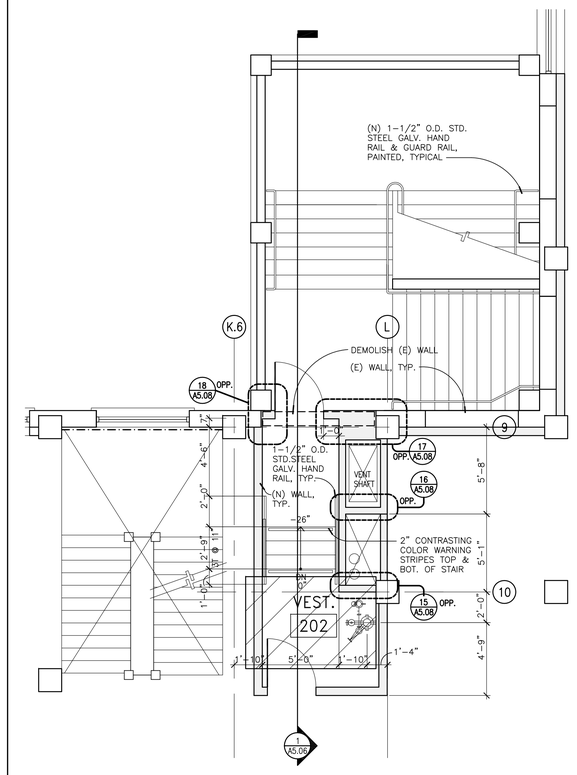

2ND FLOOR | SCALE: 1/4"=1'–0" | 2

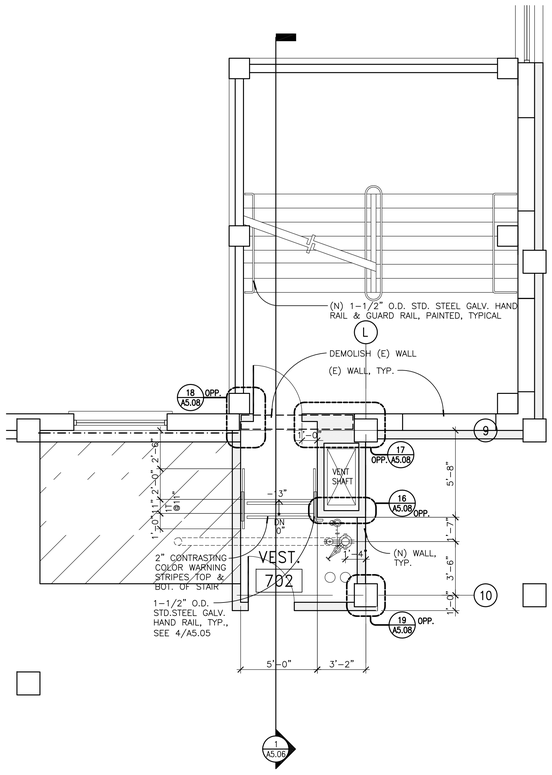

7TH FLOOR | SCALE: 1/4"=1'–0" | 7

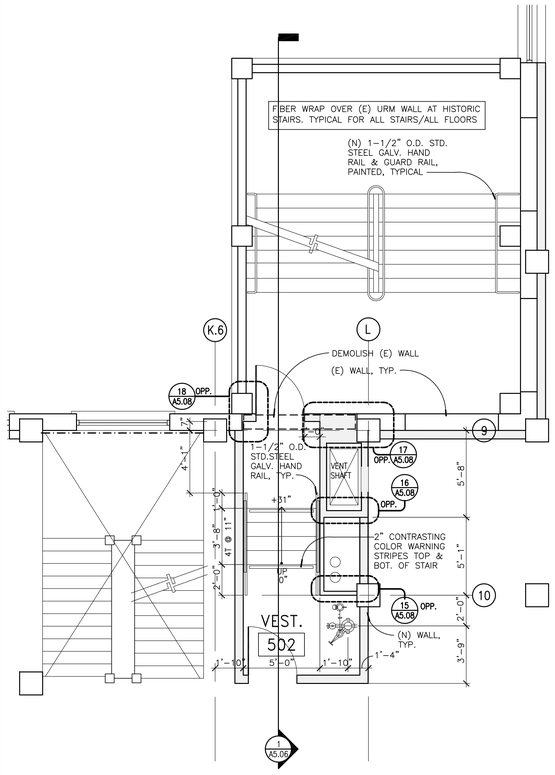

5TH FLOOR | SCALE: 1/4"=1'–0" | 5

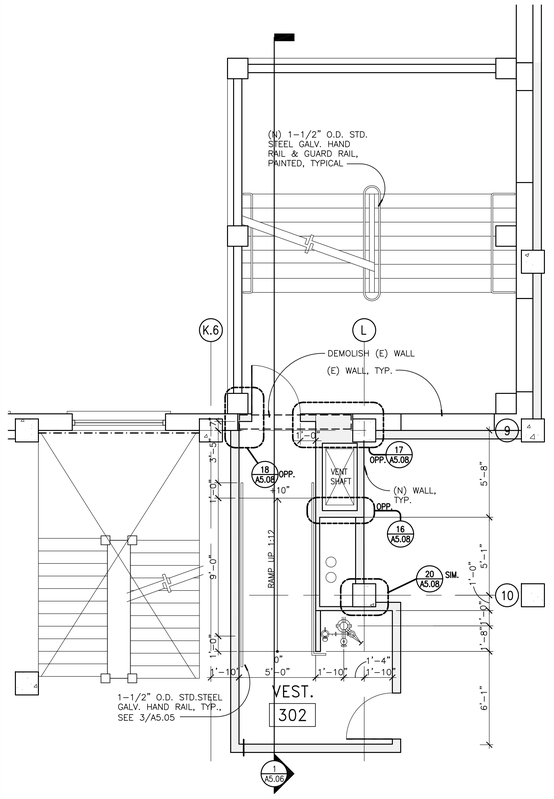

3RD FLOOR | SCALE: 1/4"=1'–0" | 3

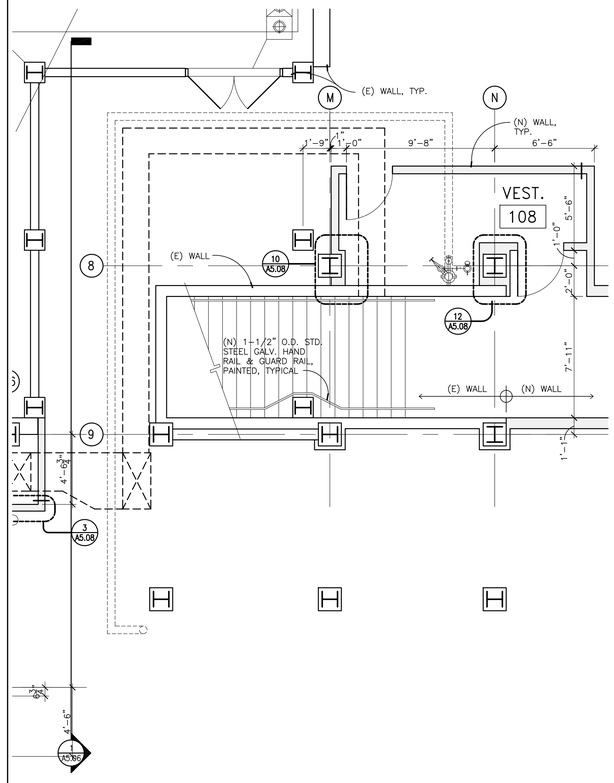

1ST FLOOR | SCALE: 1/4"=1'–0" | 1

NADEL
Architects Inc.

1990 So. Bundy Dr.
Fourth Floor
Los Angeles, CA 90025

T. 310.826.2100
F. 310.826.0182

www.nadelarc.com

CONSULTANT

COUNTY OF LOS ANGELES
THE HALL OF JUSTICE
STRUCTURAL RETROFIT PHASE

REVISIONS

DRAWING TITLE

ENLARGED STAIR B PLANS

SCALE : 1/4"=1'-0"
DATE :
JOB NO :
SHEET NO.

A5.03

SCOPING DOCUMENTS 100% SUBMISSION AUGUST 2010

ALL DRAWINGS AND WRITTEN MATERIAL APPEARING HEREIN CONSTITUTE THE ORIGINAL AND UNPUBLISHED WORK OF THE ARCHITECT AND THE SAME MAY NOT BE DUPLICATED, USED OR DISCLOSED WITHOUT THE WRITTEN CONSENT OF THE ARCHITECT. COPYRIGHT: NADEL ARCHITECTS INC. ALL RIGHTS RESERVED.

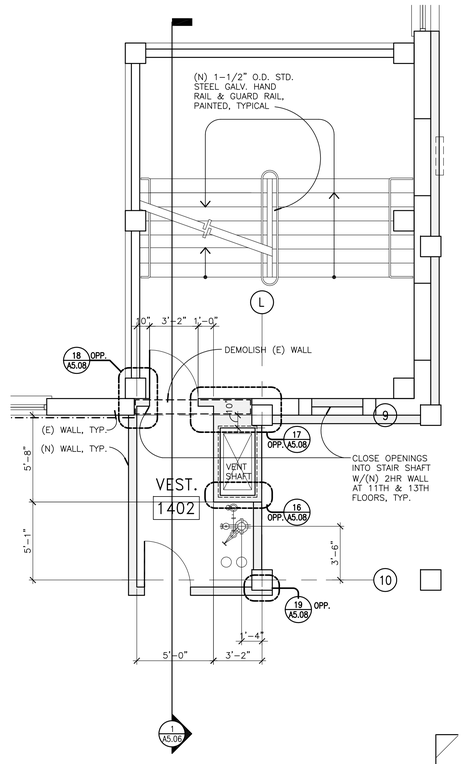

10TH, 12TH, & 14TH FLOOR | SCALE: 1/4"=1'-0" | 2

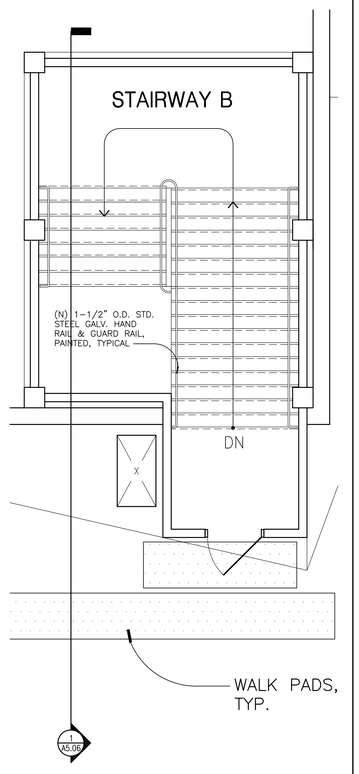

15TH FLOORS | SCALE: 1/4"=1'-0" | 3

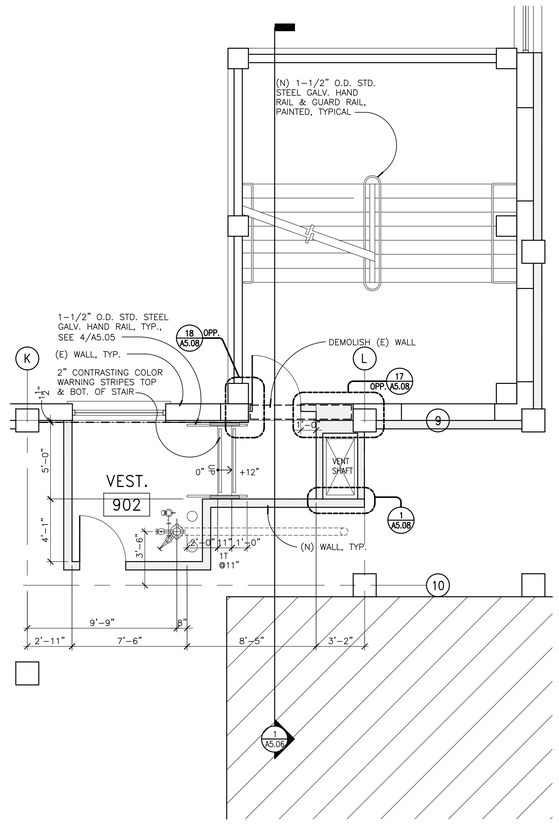

9TH FLOOR | SCALE: 1/4"=1'-0" | 1

NADEL
Architects Inc.

1990 So. Bundy Dr.
Fourth Floor
Los Angeles, CA 90025

T. 310.826.2100
F. 310.826.0182

www.nadelarc.com

CONSULTANT

COUNTY OF LOS ANGELES
THE HALL OF JUSTICE
STRUCTURAL RETROFIT PHASE

REVISIONS

1	
2	
3	
4	
5	
6	

DRAWING TITLE

ENLARGED STAIR B PLANS SECTIONS & DETAILS

SCALE : 1/4"=1'-0"
DATE :
JOB NO :
SHEET NO.

A5.04

SCOPING DOCUMENTS 100% SUBMISSION AUGUST 2010

ALL DRAWINGS AND WRITTEN MATERIAL APPEARING HEREIN CONSTITUTE THE ORIGINAL AND UNPUBLISHED WORK OF THE ARCHITECT AND THE SAME MAY NOT BE DUPLICATED, USED OR DISCLOSED WITHOUT THE WRITTEN CONSENT OF THE ARCHITECT. COPYRIGHT: NADEL ARCHITECTS INC. ALL RIGHTS RESERVED.

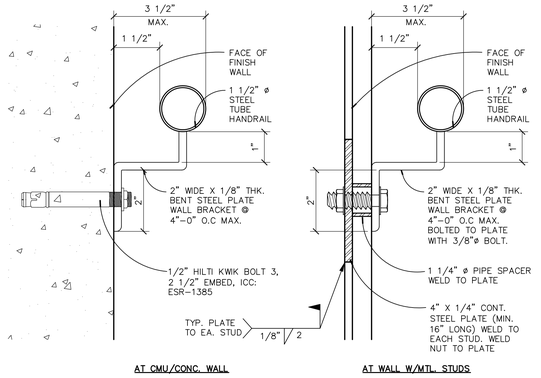

AT CMU/CONC. WALL

AT WALL W/MTL. STUDS

HANDRAIL CONNECTION DETAIL

SCALE: HALF

5

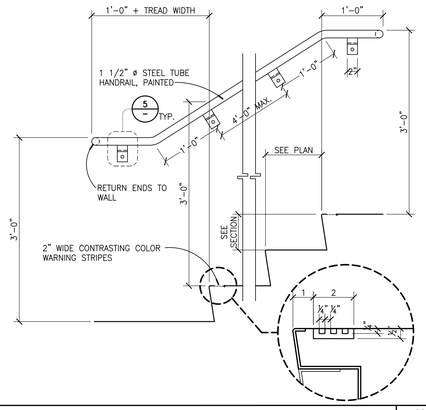

STAIR HAND RAIL DETAIL

SCALE: 1"=1'-0"

4

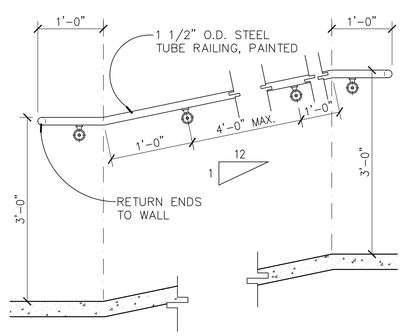

RAMP HAND RAIL DETAIL

SCALE: 1"=1'-0"

3

NOT USED

SCALE: 1/8"=1'-0"

2

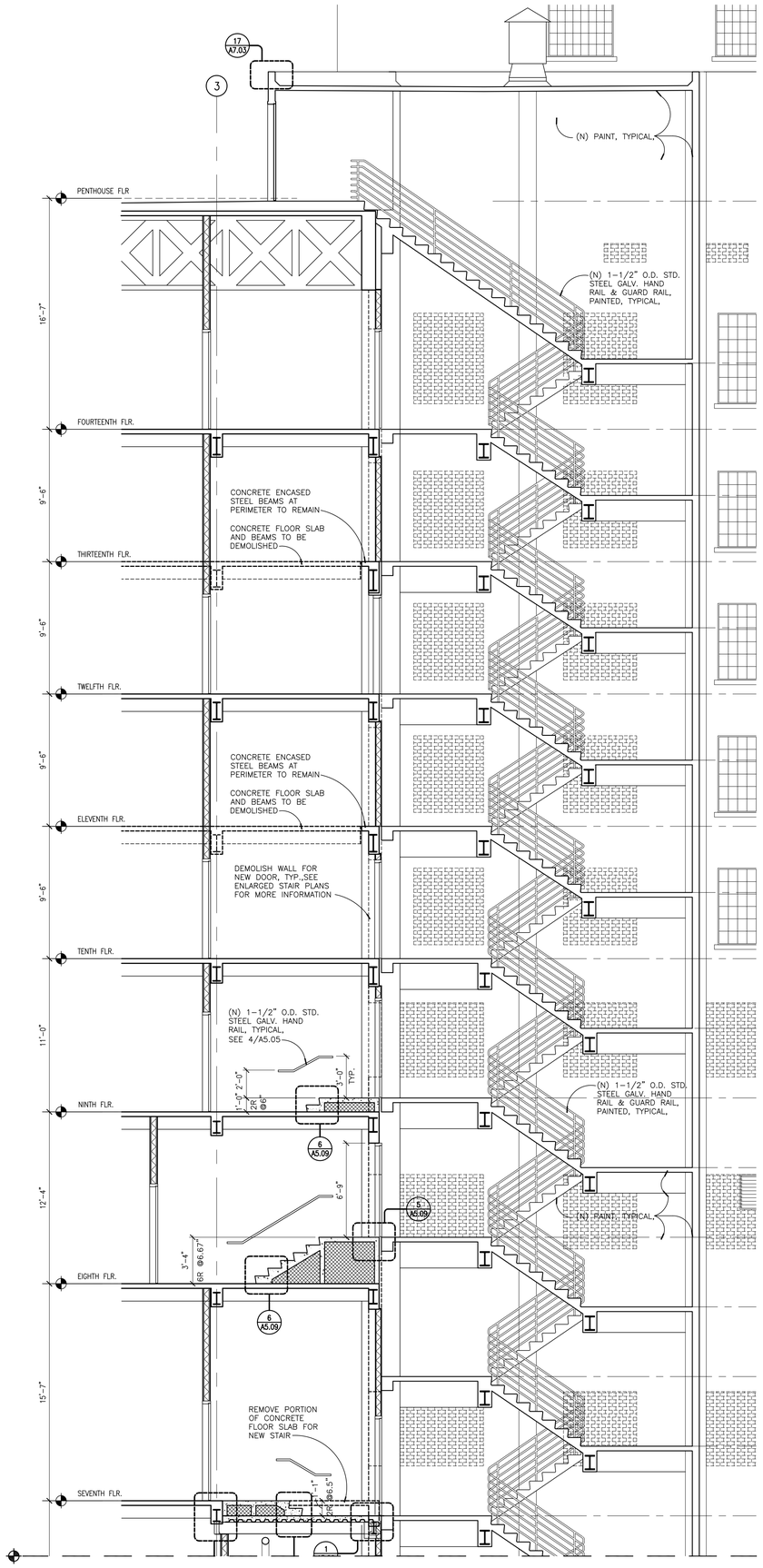

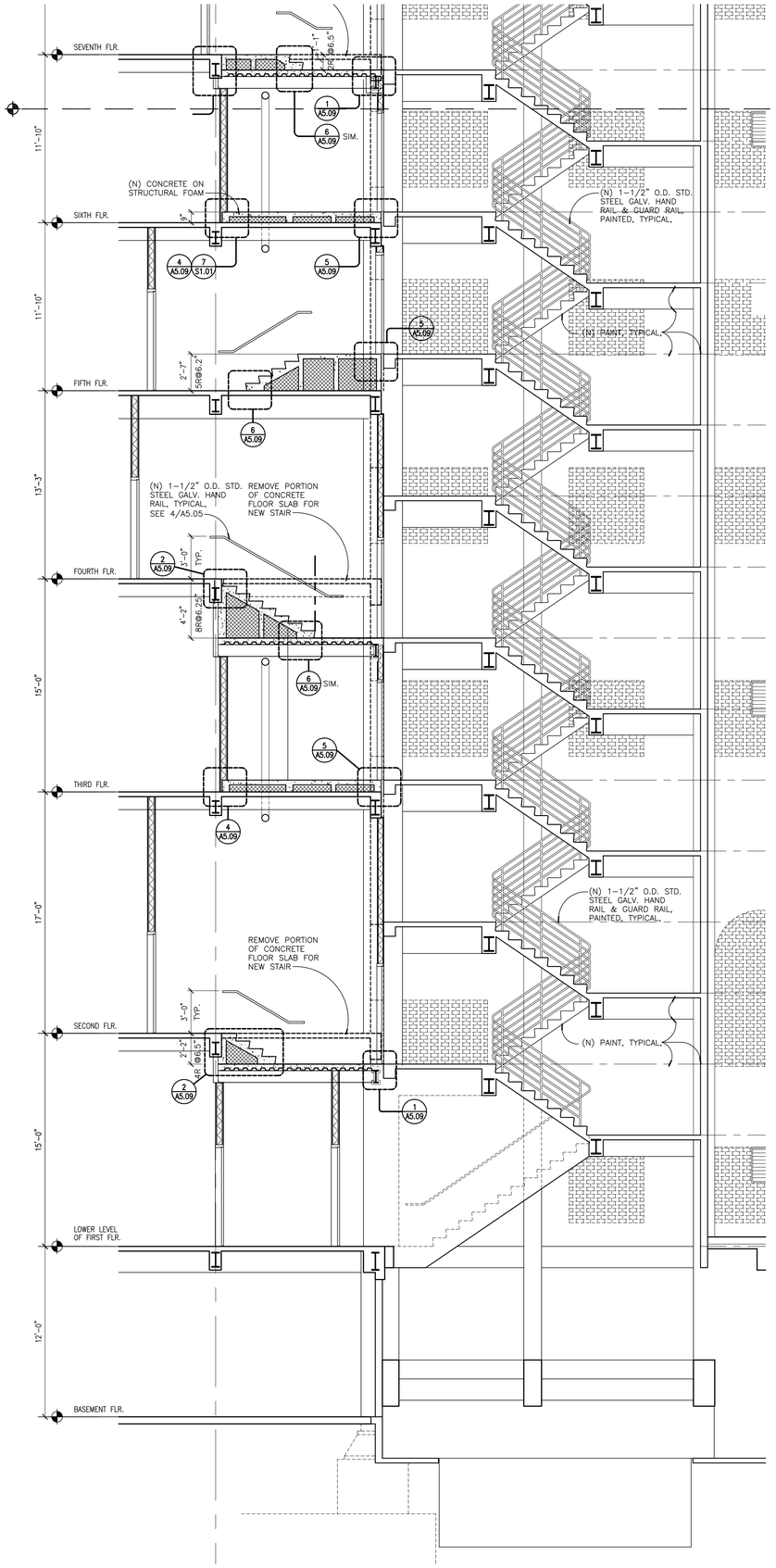

STAIR SECTION - STAIR A

SCALE: 1/8"=1'-0"

1

NADEL
Architects Inc.

1990 So. Bundy Dr.
Fourth Floor
Los Angeles, CA 90025

T. 310.826.2100
F. 310.826.0182

www.nadelarc.com

CONSULTANT

COUNTY OF LOS ANGELES

THE HALL OF JUSTICE

STRUCTURAL RETROFIT PHASE

REVISIONS

DRAWING TITLE

STAIR SECTION - STAIR A

SCOPING DOCUMENTS 100% SUBMISSION AUGUST 2010

SCALE : 1/8"=1'-0"
DATE :
JOB NO :
SHEET NO.

A5.05

ALL DRAWINGS AND WRITTEN MATERIAL APPEARING HEREIN CONSTITUTE THE ORIGINAL AND UNPUBLISHED WORK OF THE ARCHITECT AND THE SAME MAY NOT BE DUPLICATED, USED OR DISCLOSED WITHOUT THE WRITTEN CONSENT OF THE ARCHITECT. COPYRIGHT: NADEL ARCHITECTS INC. ALL RIGHTS RESERVED.

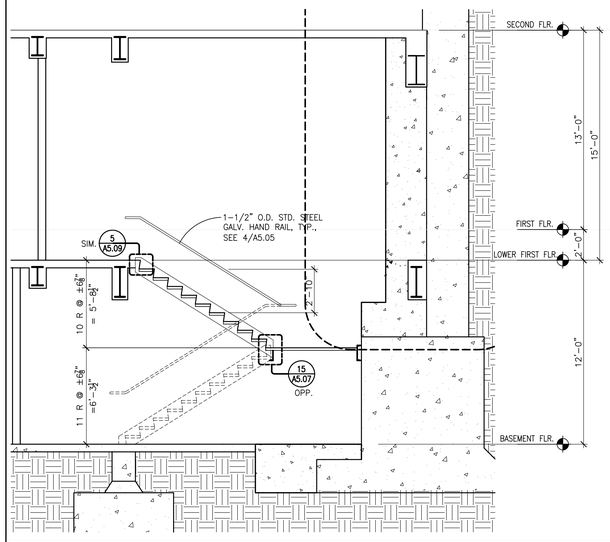

STAIR SECTION - STAIR #5 | SCALE: 1/4"=1'-0" | 2

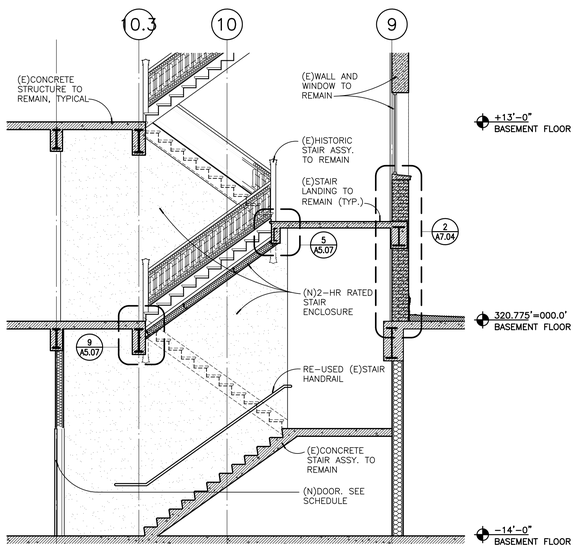

STAIR SECTION - STAIR #1 | SCALE: 1/4"=1'-0" | 3

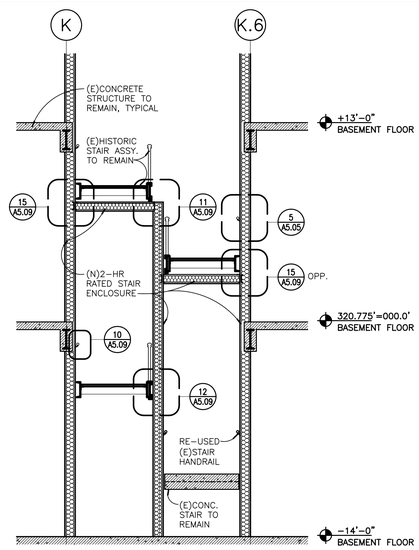

STAIR SECTION - STAIR #1 | SCALE: 1/4"=1'-0" | 4

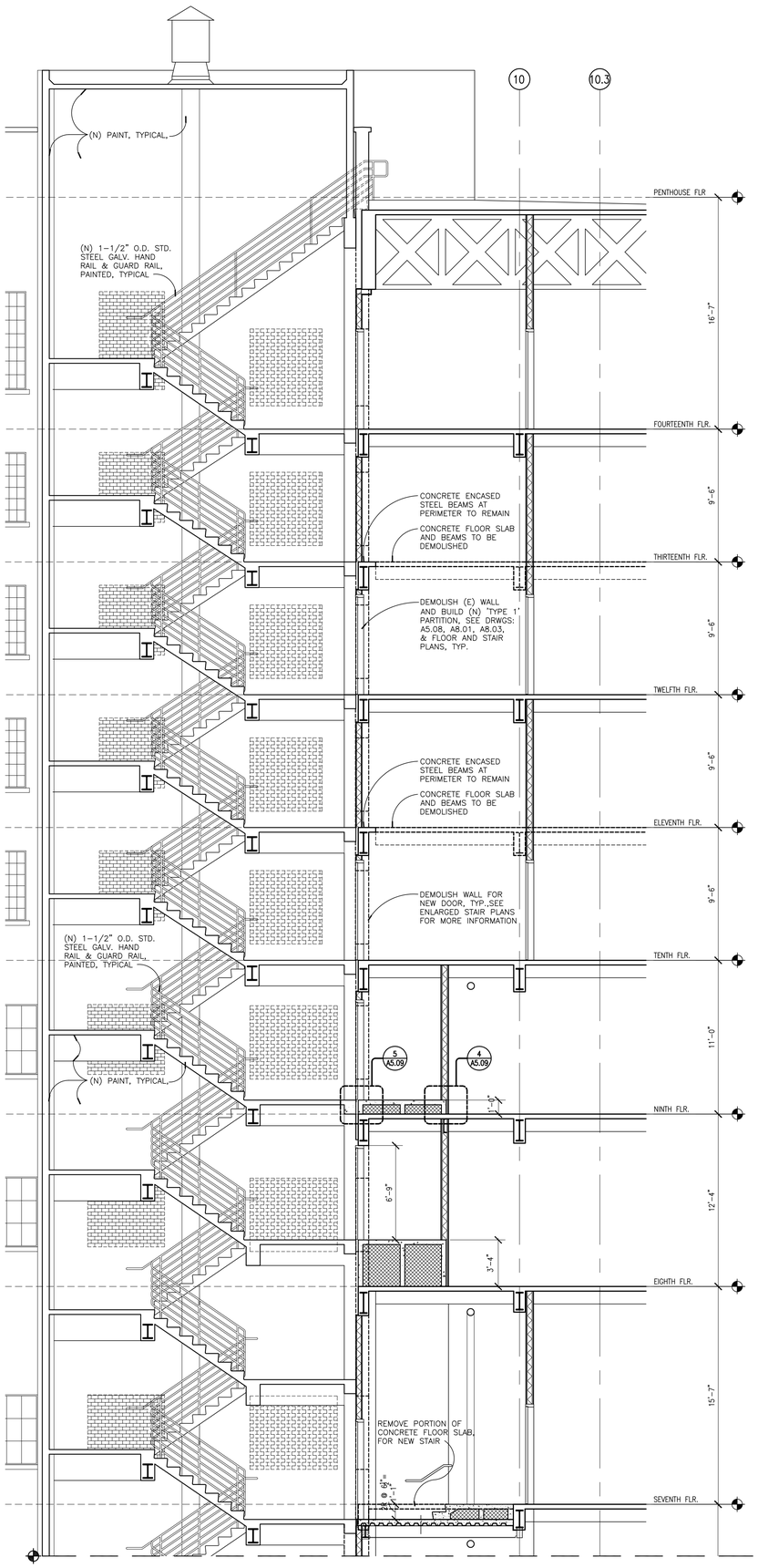

STAIR SECTION - STAIR B | SCALE: 1/4"=1'-0" | 1

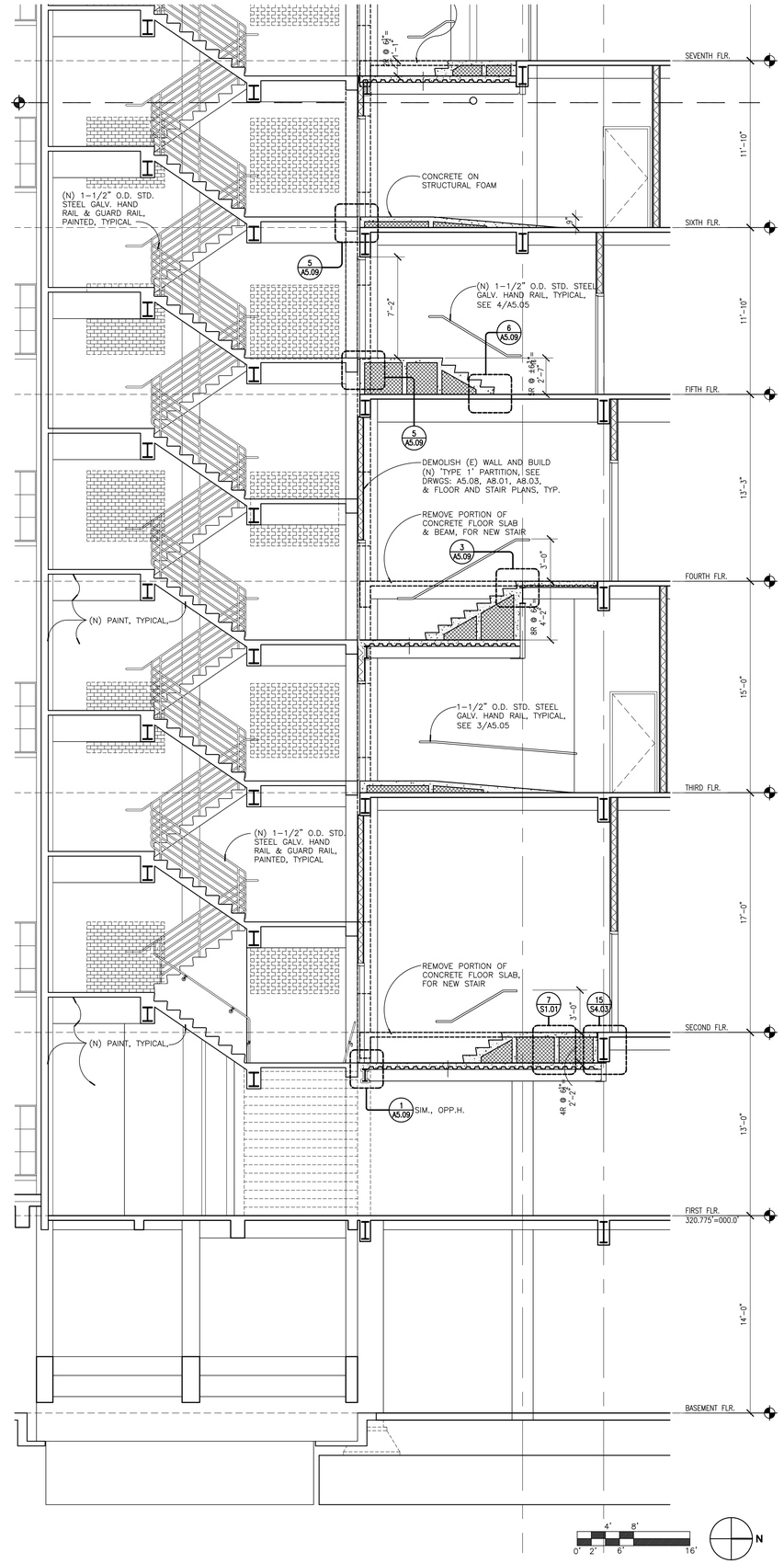

ALL DRAWINGS AND WRITTEN MATERIAL APPEARING HEREIN CONSTITUTE THE ORIGINAL AND UNPUBLISHED WORK OF THE ARCHITECT AND THE SAME MAY NOT BE DUPLICATED, USED OR DISCLOSED WITHOUT THE WRITTEN CONSENT OF THE ARCHITECT. COPYRIGHT: NADEL ARCHITECTS INC. ALL RIGHTS RESERVED.

NADEL
Architects Inc.

1990 So. Bundy Dr.
Fourth Floor
Los Angeles, CA 90025

T. 310.826.2100
F. 310.826.0182

www.nadelarc.com

CONSULTANT

COUNTY OF LOS ANGELES
THE HALL OF JUSTICE
STRUCTURAL RETROFIT PHASE

REVISIONS

1	6-9-05
2	
3	
4	
5	
6	

DRAWING TITLE

STAIR SECTION - STAIR B AND STAIR #5

SCOPING DOCUMENTS 100% SUBMISSION AUGUST 2010

SCALE : 1/8"=1'-0"
DATE :
JOB NO :
SHEET NO.

A5.06

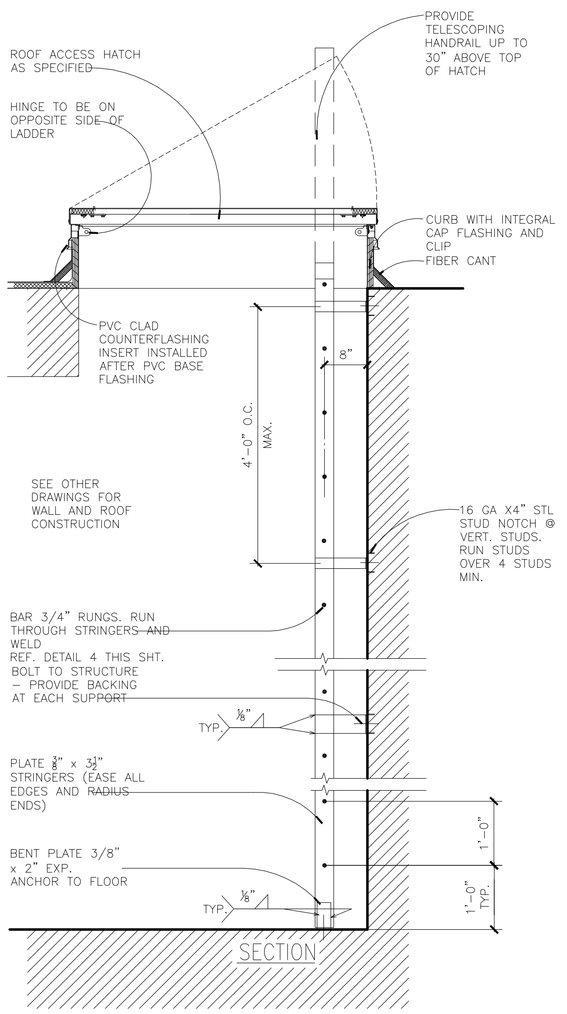

NOTE:
1) LADDER SHALL BE GALVANIZED AND SKID RESISTANT.
2) LADDER SHALL CONFORM TO OSHA 1926.1053

ROOF ACCESS LADDER

SCALE: 3/4"=1'-0" | 18

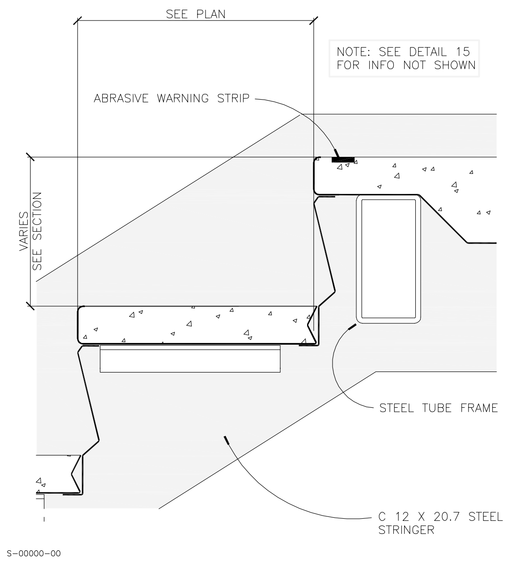

STAIR LANDING

SCALE: 3"=1'-0" | 13

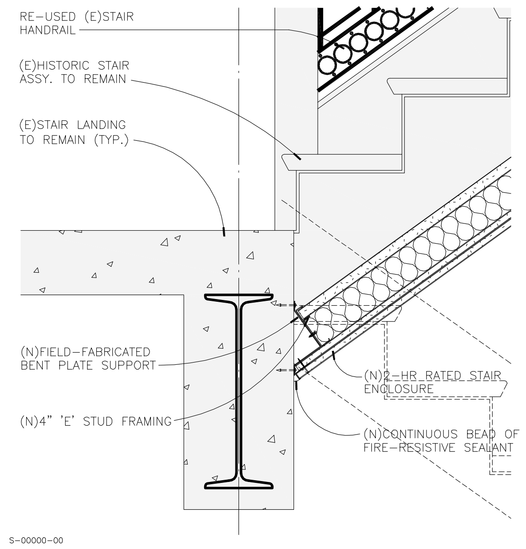

FIREPROOFING HISTORIC STAIRS

SCALE: 1 1/2"=1'-0" | 9

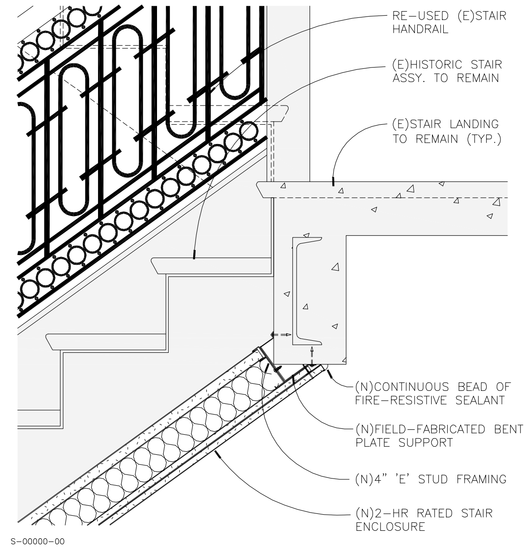

FIREPROOFING HISTORIC STAIRS

SCALE: 1 1/2"=1'-0" | 5

NOT USED

SCALE: "=1'-0" | 1

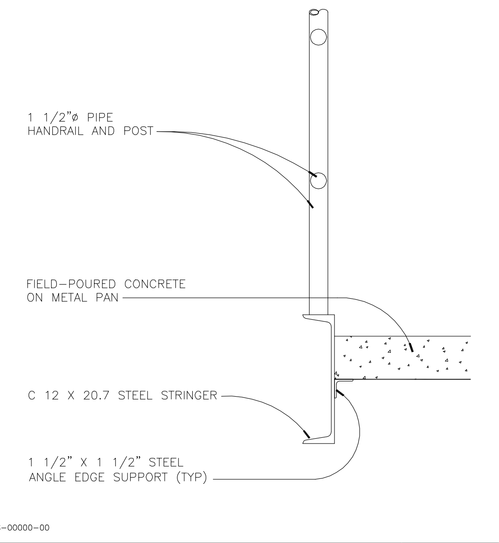

GUARDRAIL SECTION

SCALE: 1-1/2"=1'-0" | 14

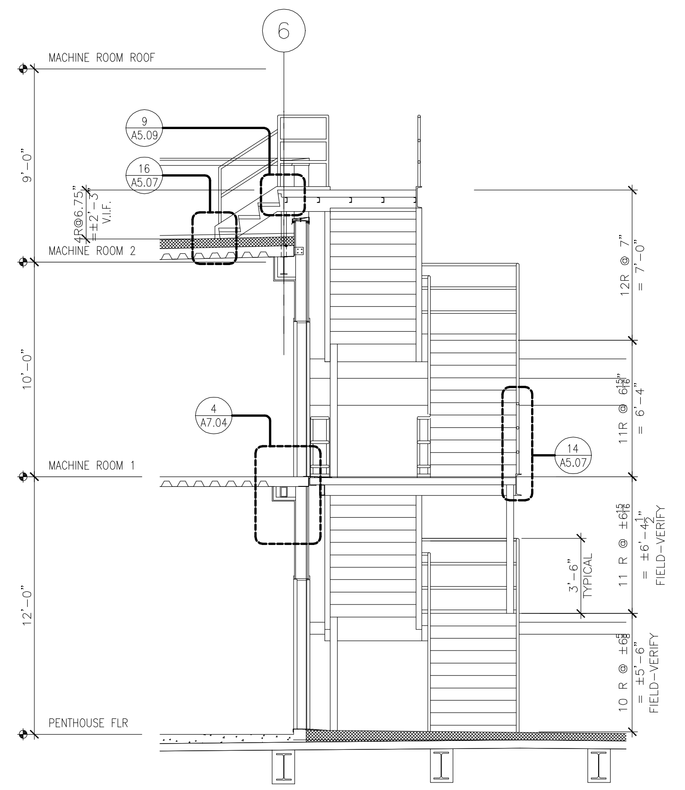

PENTHOUSE STAIR SECTION

SCALE: 1/4"=1'-0" | 6

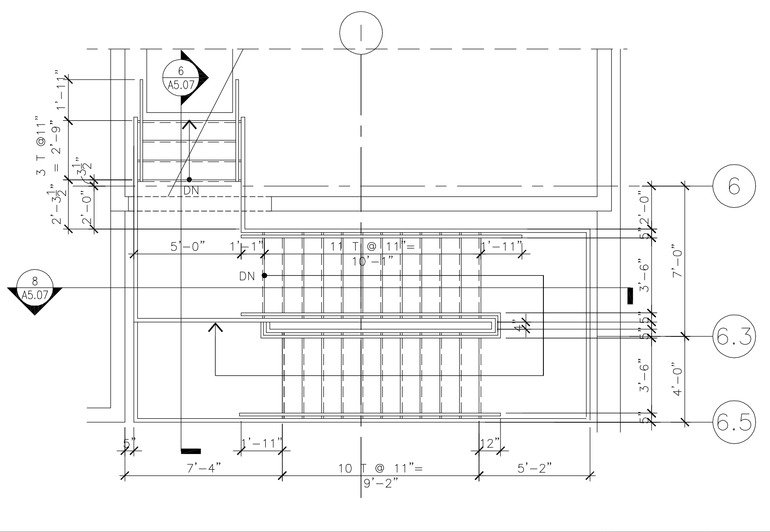

PENTHOUSE STAIR AT MACHINE ROOM 2 LEVEL

SCALE: 1/4"=1'-0" | 2

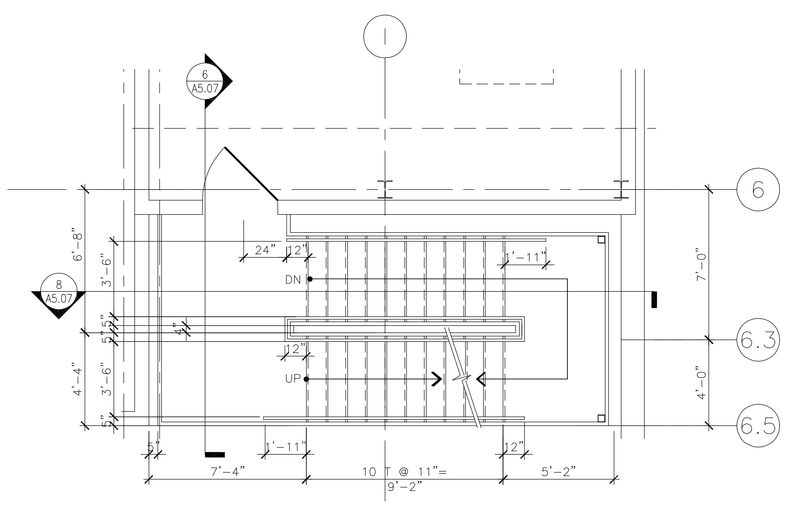

PENTHOUSE STAIR AT MACHINE ROOM 1 LEVEL

SCALE: 1/4"=1'-0" | 3

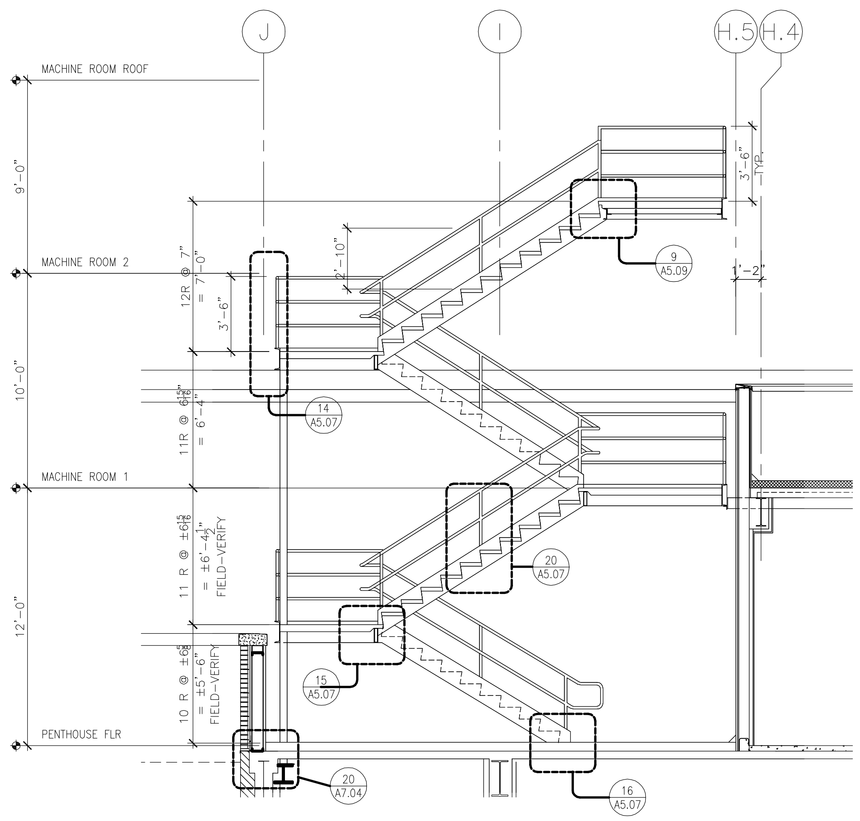

PENTHOUSE STAIR SECTION

SCALE: 1/4"=1'-0" | 8

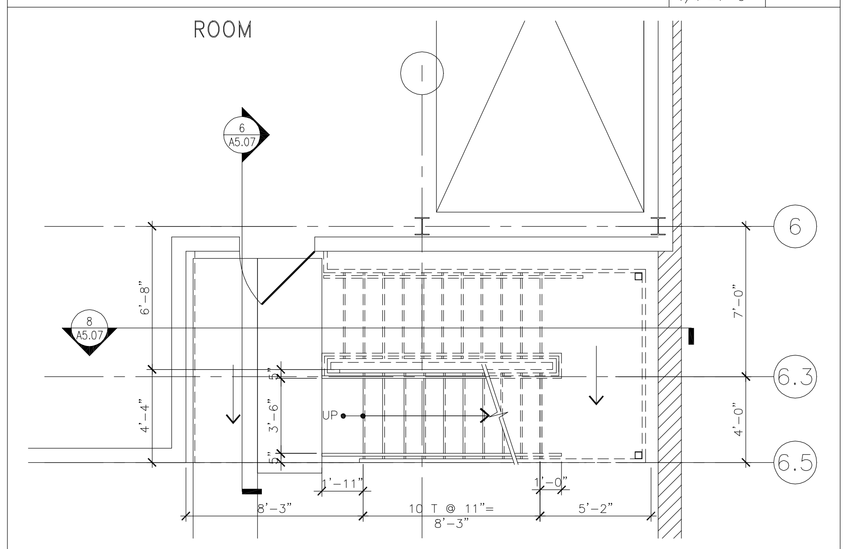

PENTHOUSE STAIR AT PENTHOUSE LEVEL

SCALE: 1/4"=1'-0" | 4

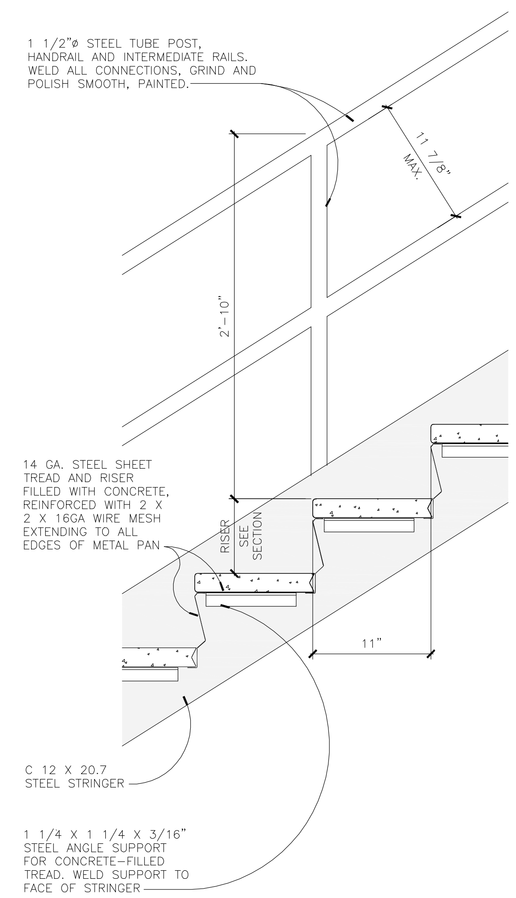

TYPICAL STAIR DETAILS

SCALE: 1 1/2"=1'-0" | 20

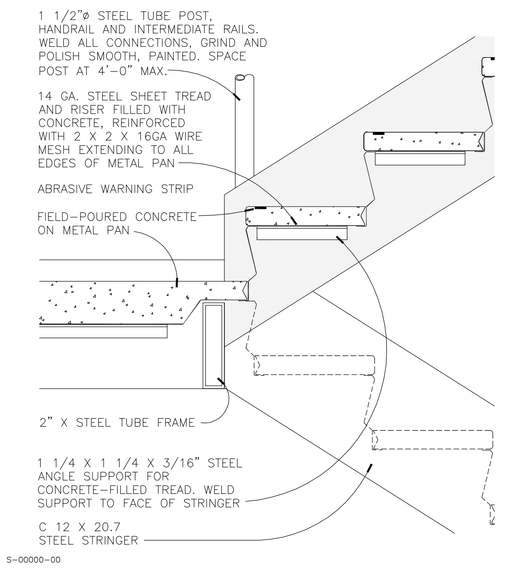

STAIR INTERMEDIATE LANDING

SCALE: 1 1/2"=1'-0" | 15

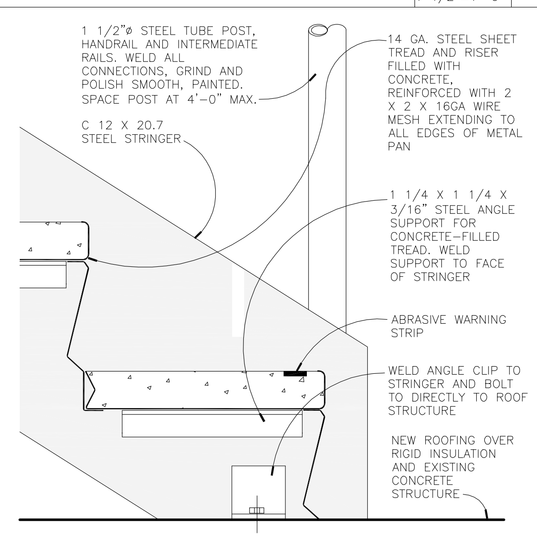

STAIR BASE DETAIL

SCALE: 3"=1'-0" | 16

NADEL
Architects Inc.

1990 So. Bundy Dr.
Fourth Floor
Los Angeles, CA 90025

T. 310.826.2100
F. 310.826.0182

www.nadelarc.com

CONSULTANT

COUNTY OF LOS ANGELES
THE HALL OF JUSTICE
STRUCTURAL RETROFIT PHASE

REVISIONS

1	
2	
3	
4	
5	
6	

DRAWING TITLE

PENTHOUSE STAIR PLANS, SECTIONS AND DETAILS

SCOPING DOCUMENTS 100% SUBMISSION AUGUST 2010

SCALE :
DATE :
JOB NO :
SHEET NO.

A5.07

ALL DRAWINGS AND WRITTEN MATERIAL APPEARING HEREIN CONSTITUTE THE ORIGINAL AND UNPUBLISHED WORK OF THE ARCHITECT AND THE SAME MAY NOT BE DUPLICATED, USED OR DISCLOSED WITHOUT THE WRITTEN CONSENT OF THE ARCHITECT. COPYRIGHT: NADEL ARCHITECTS INC. ALL RIGHTS RESERVED.

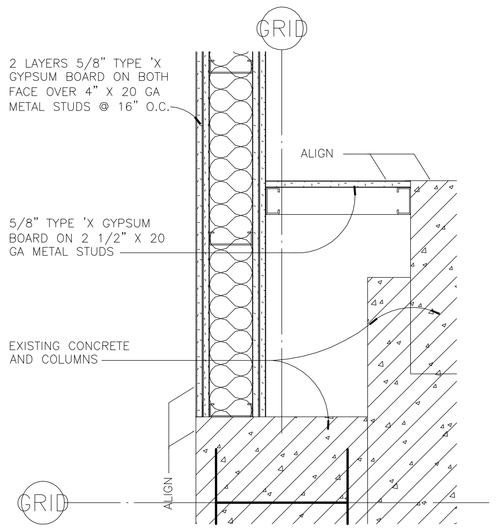

PARTIAL PLAN DETAILS | SCALE: 1 1/2"=1'-0" | 21

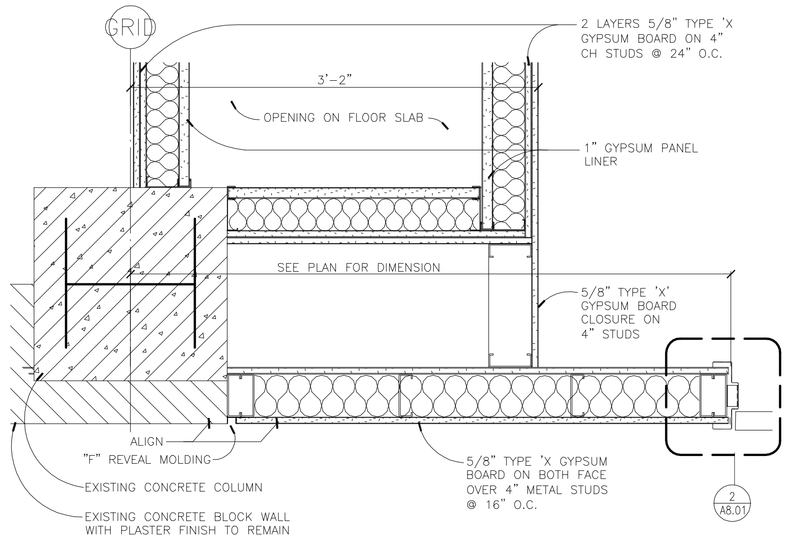

PARTIAL PLAN DETAILS | SCALE: 1 1/2"=1'-0" | 17

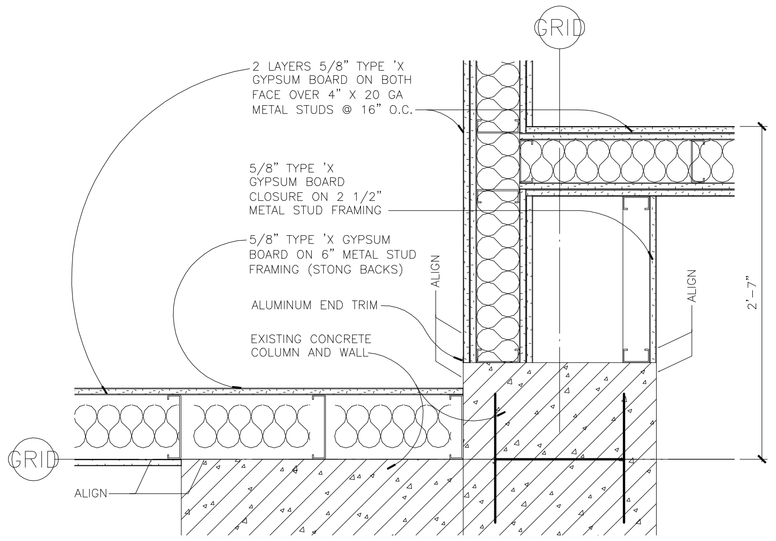

PARTIAL PLAN DETAILS | SCALE: 1 1/2"=1'-0" | 9

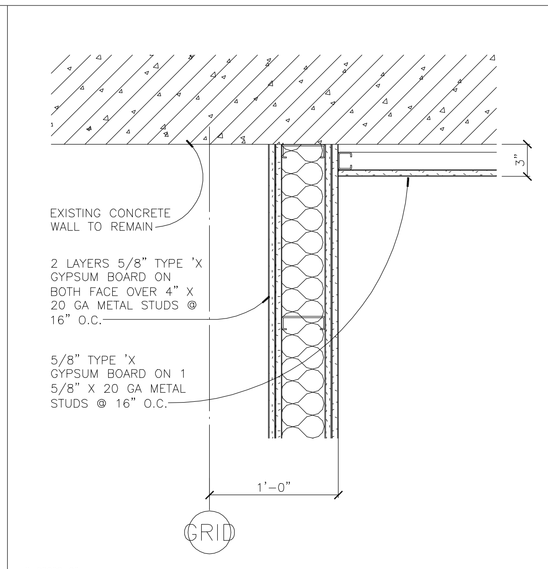

PARTIAL PLAN DETAILS | SCALE: 1 1/2"=1'-0" | 5

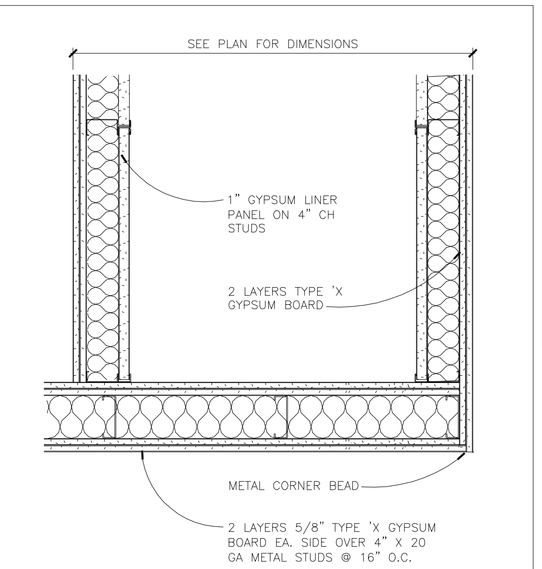

PARTIAL PLAN DETAILS | SCALE: 1 1/2"=1'-0" | 1

PARTIAL PLAN DETAILS | SCALE: 1 1/2"=1'-0" | 22

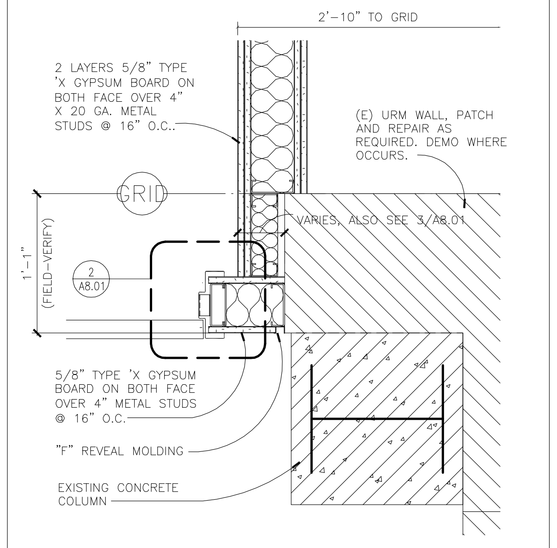

PARTIAL PLAN DETAILS | SCALE: 1 1/2"=1'-0" | 18

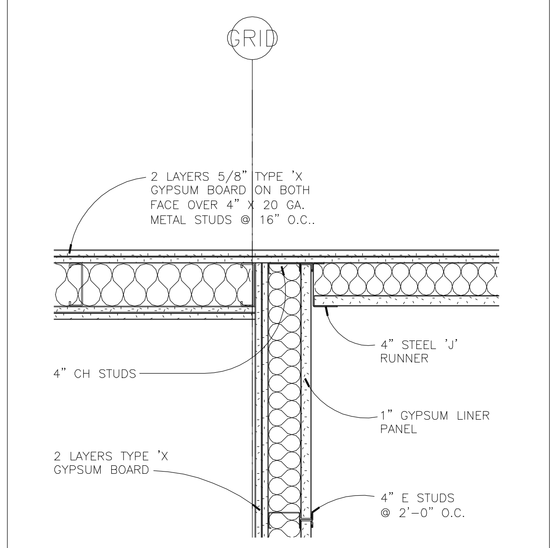

PARTIAL PLAN DETAILS | SCALE: 1 1/2"=1'-0" | 14

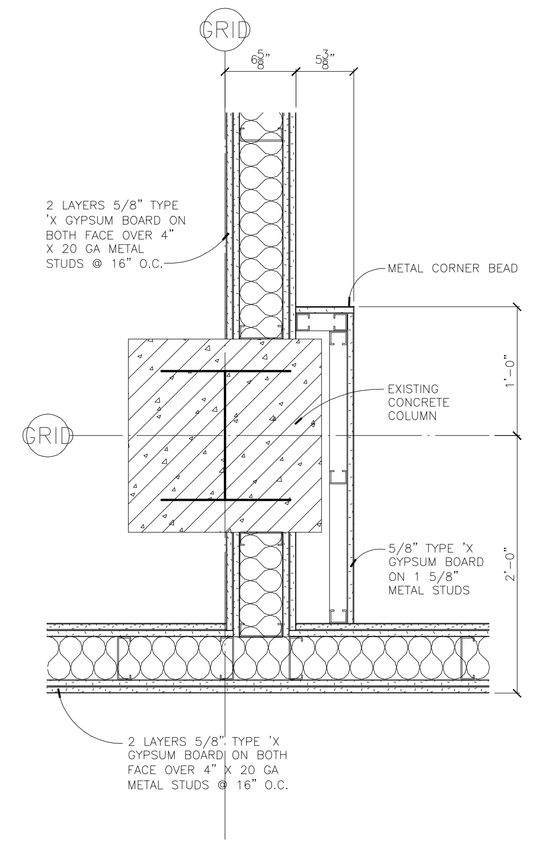

S-00000-00
PARTIAL PLAN DETAILS | SCALE: 1 1/2"=1'-0" | 10

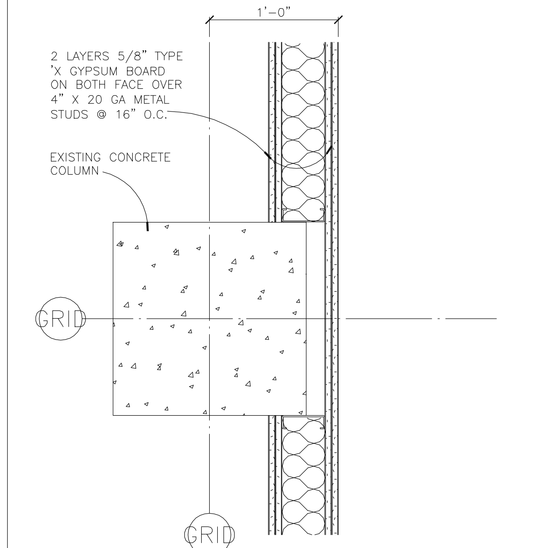

PARTIAL PLAN DETAILS | SCALE: 1 1/2"=1'-0" | 6

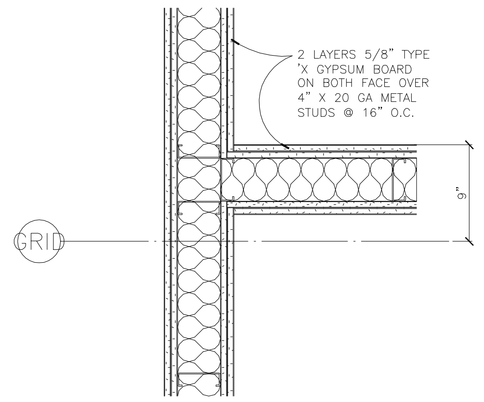

PARTIAL PLAN DETAILS | SCALE: 1 1/2"=1'-0" | 2

PARTIAL PLAN DETAILS | SCALE: 1 1/2"=1'-0" | 23

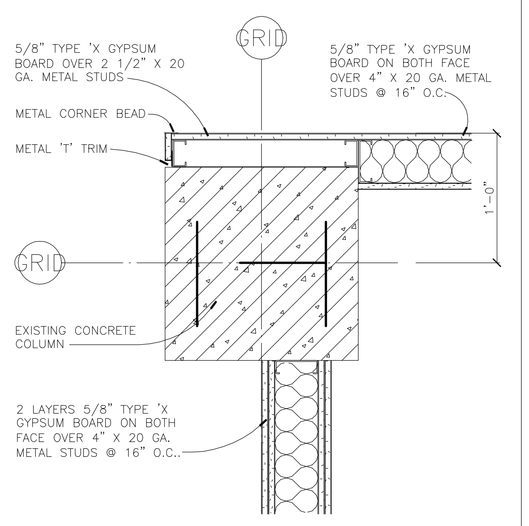

PARTIAL PLAN DETAILS | SCALE: 1 1/2"=1'-0" | 19

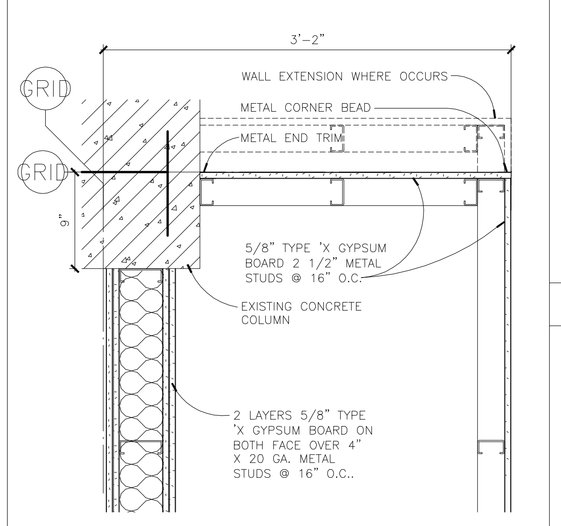

PARTIAL PLAN DETAILS | SCALE: 1 1/2"=1'-0" | 15

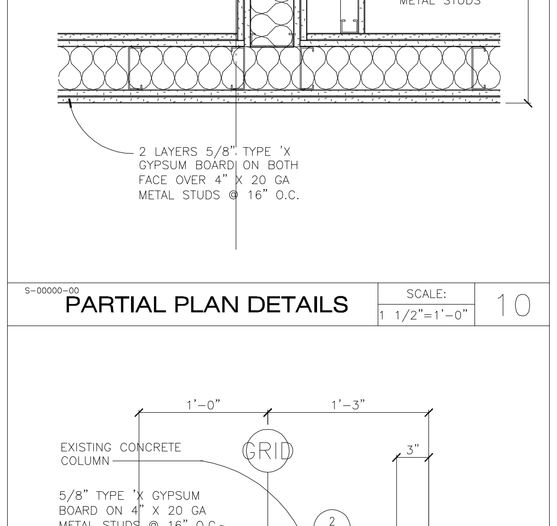

S-00000-00
PARTIAL PLAN DETAILS | SCALE: 1 1/2"=1'-0" | 12

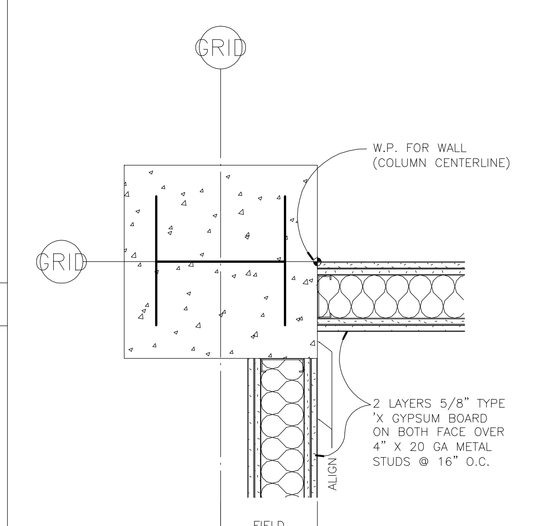

PARTIAL PLAN DETAILS | SCALE: 1 1/2"=1'-0" | 7

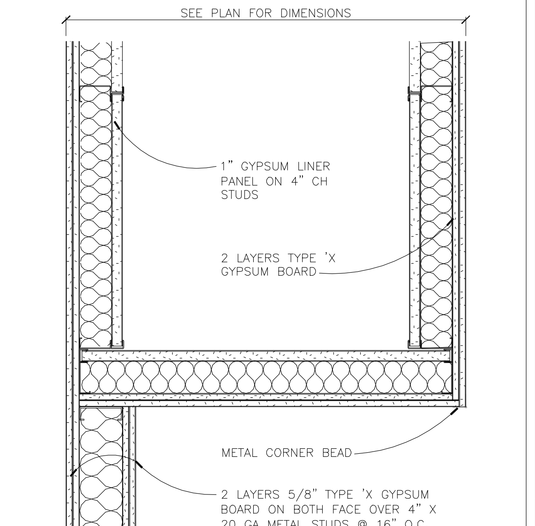

PARTIAL PLAN DETAILS | SCALE: 1 1/2"=1'-0" | 3

PARTIAL PLAN DETAILS | SCALE: 1 1/2"=1'-0" | 24

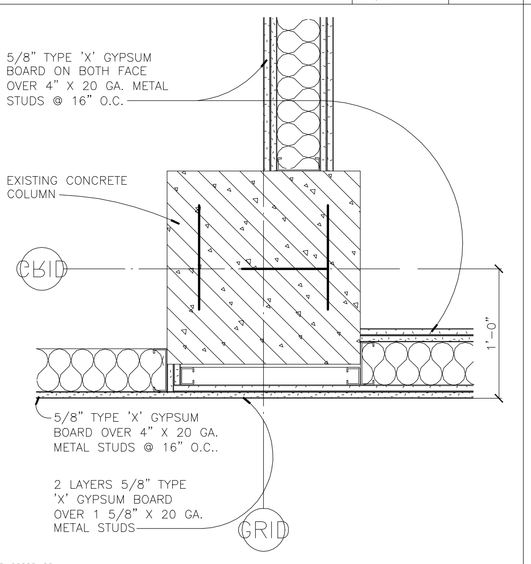

PARTIAL PLAN DETAILS | SCALE: 1 1/2"=1'-0" | 20

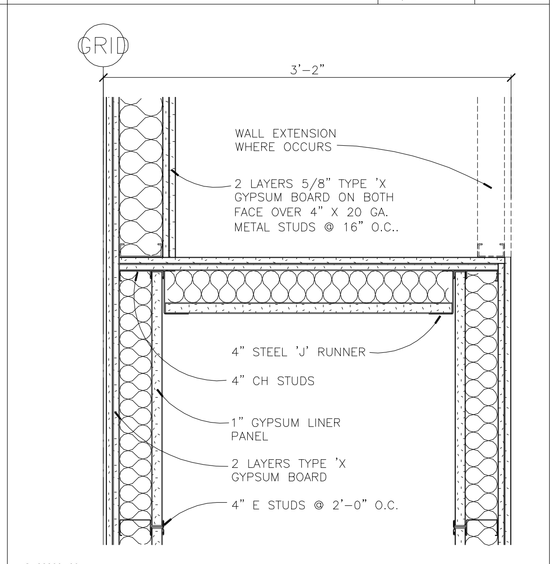

PARTIAL PLAN DETAILS | SCALE: 1 1/2"=1'-0" | 16

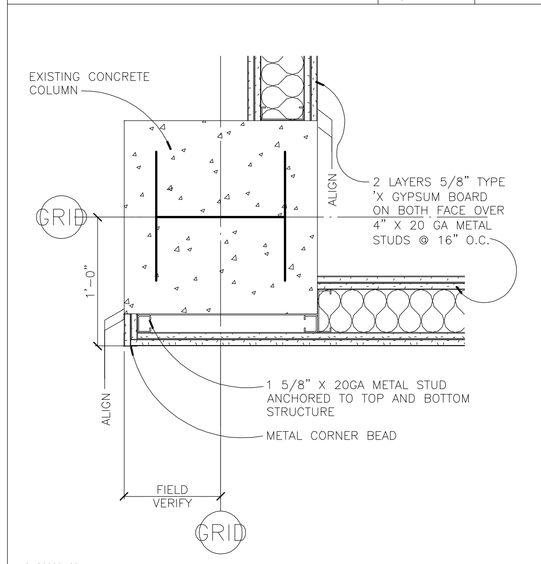

PARTIAL PLAN DETAILS | SCALE: 1 1/2"=1'-0" | 8

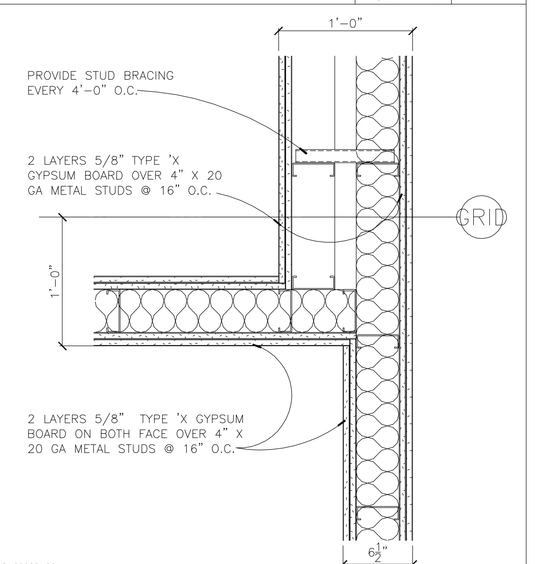

PARTIAL PLAN DETAILS | SCALE: 1 1/2"=1'-0" | 4

NADEL
Architects Inc.

1990 So. Bundy Dr.
Fourth Floor
Los Angeles, CA 90025

T. 310.826.2100
F. 310.826.0182

www.nadelarc.com

CONSULTANT

COUNTY OF LOS ANGELES

THE HALL OF JUSTICE

STRUCTURAL RETROFIT PHASE

REVISIONS

1	
2	
3	
4	
5	
6	

DRAWING TITLE

DETAILS

SCALE :
DATE :
JOB NO :
SHEET NO.

A5.08

SCOPING DOCUMENTS 100% SUBMISSION AUGUST 2010

ALL DRAWINGS AND WRITTEN MATERIAL APPEARING HEREIN CONSTITUTE THE ORIGINAL AND UNPUBLISHED WORK OF THE ARCHITECT AND THE SAME MAY NOT BE DUPLICATED, USED OR DISCLOSED WITHOUT THE WRITTEN CONSENT OF THE ARCHITECT. COPYRIGHT: NADEL ARCHITECTS INC. ALL RIGHTS RESERVED.

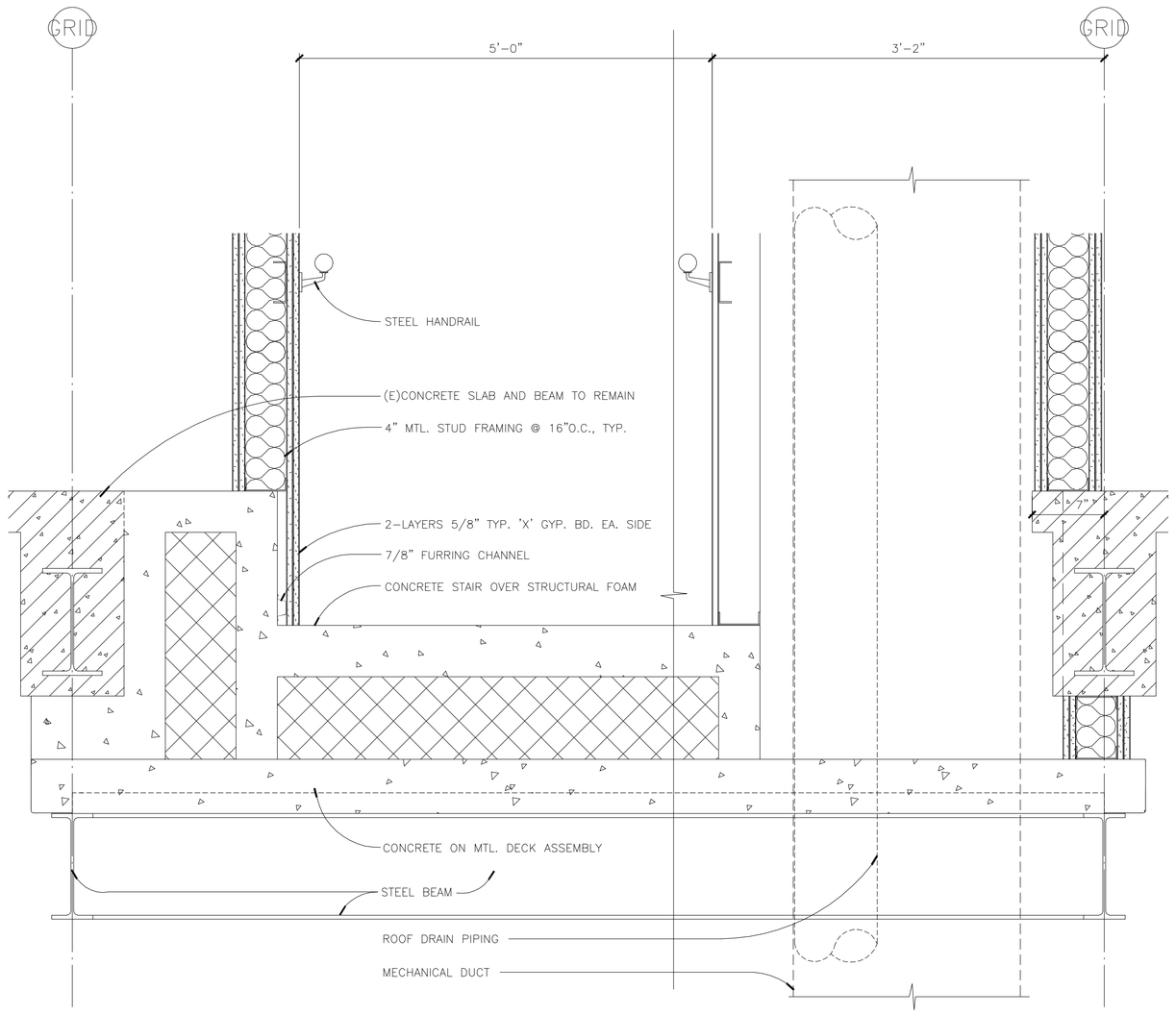

DETAILS | SCALE: 1 1/2"=1'-0" | 14

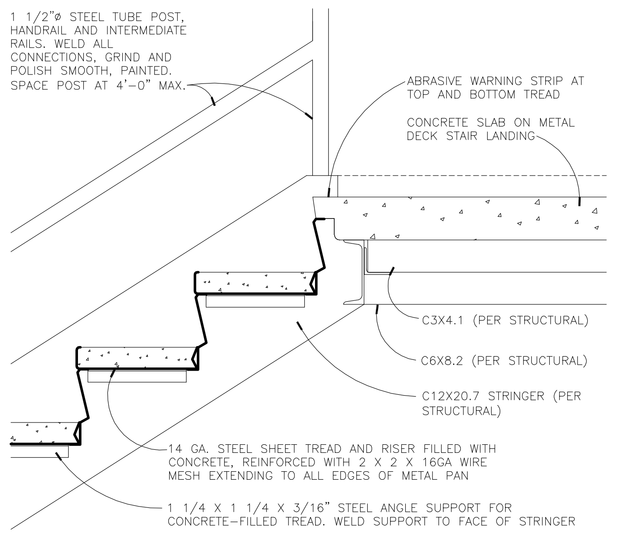

DETAILS | SCALE: 1 1/2"=1'-0" | 9

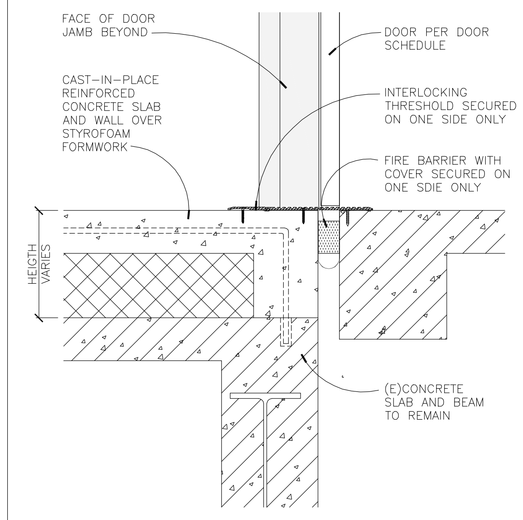

DETAILS | SCALE: 1 1/2"=1'-0" | 5

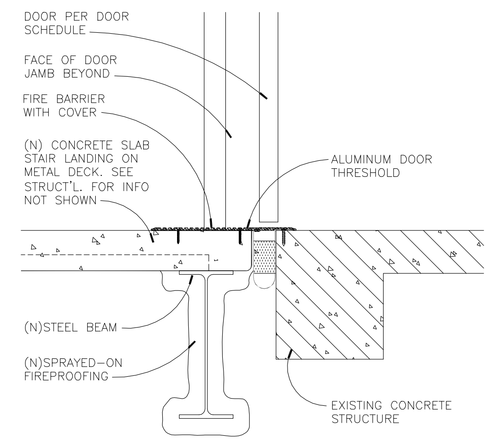

DETAILS | SCALE: 1 1/2"=1'-0" | 1

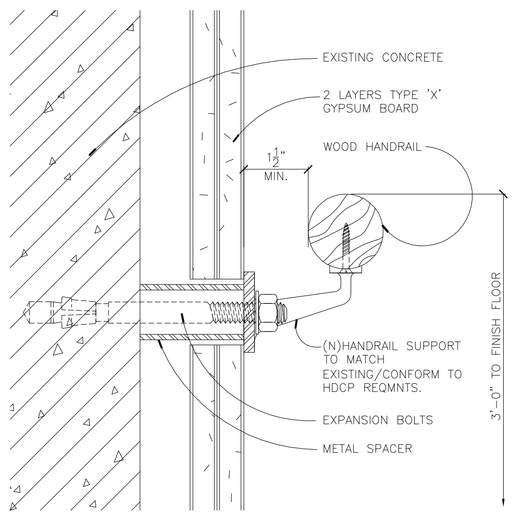

DETAILS | SCALE: HALF SIZE | 10

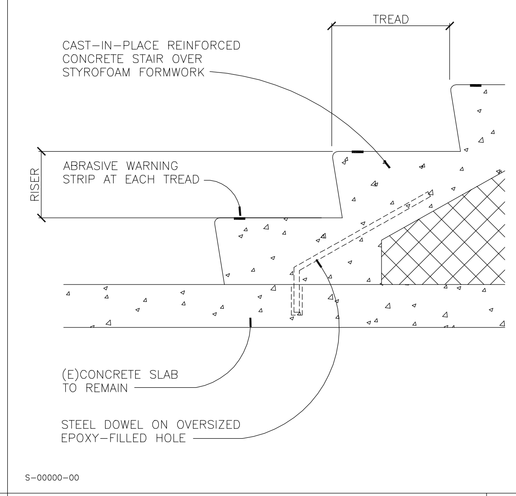

DETAILS | SCALE: 1 1/2"=1'-0" | 6

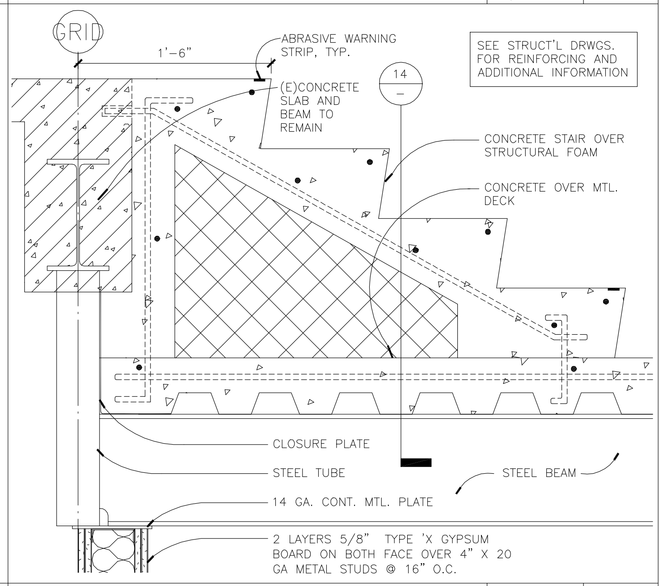

DETAILS | SCALE: 1 1/2"=1'-0" | 2

NOT USED | SCALE: 1 1/2"=1'-0" | 19

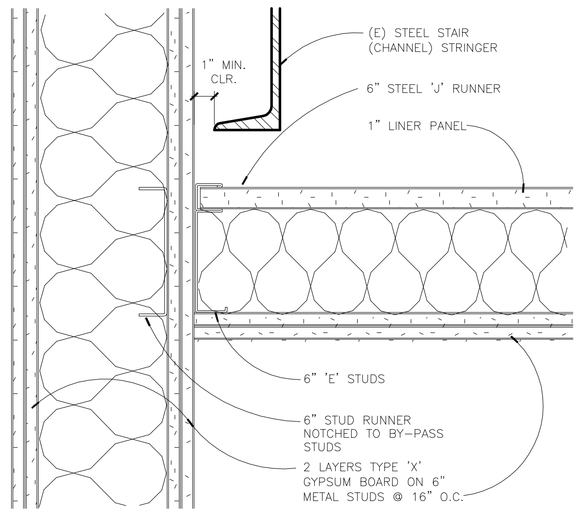

DETAILS | SCALE: 3"=1'-0" | 15

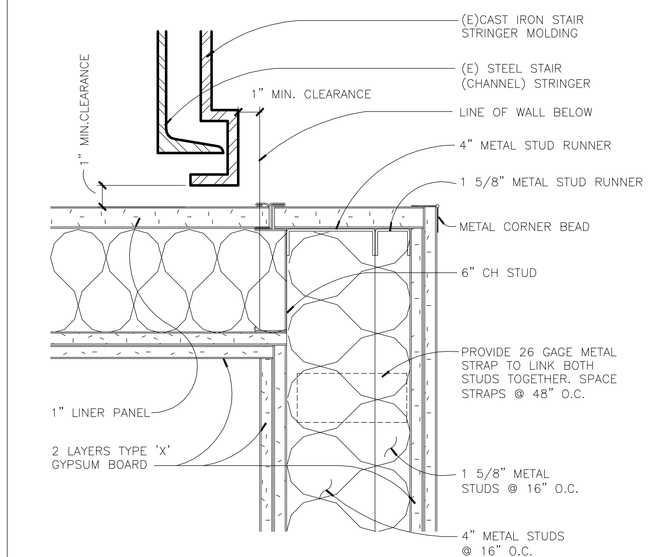

DETAILS | SCALE: 3"=1'-0" | 11

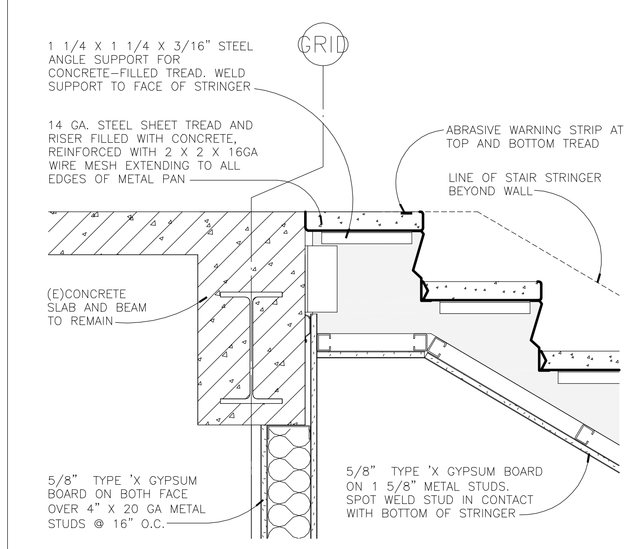

DETAILS | SCALE: 1 1/2"=1'-0" | 7

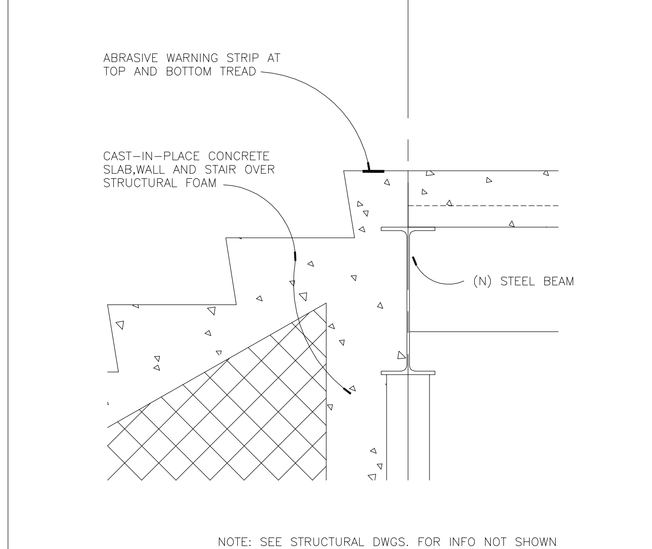

NOTE: SEE STRUCTURAL DWGS. FOR INFO NOT SHOWN

DETAILS | SCALE: 1 1/2"=1'-0" | 3

NOT USED | SCALE: 1 1/2"=1'-0" | 20

NOT USED | SCALE: 1 1/2"=1'-0" | 16

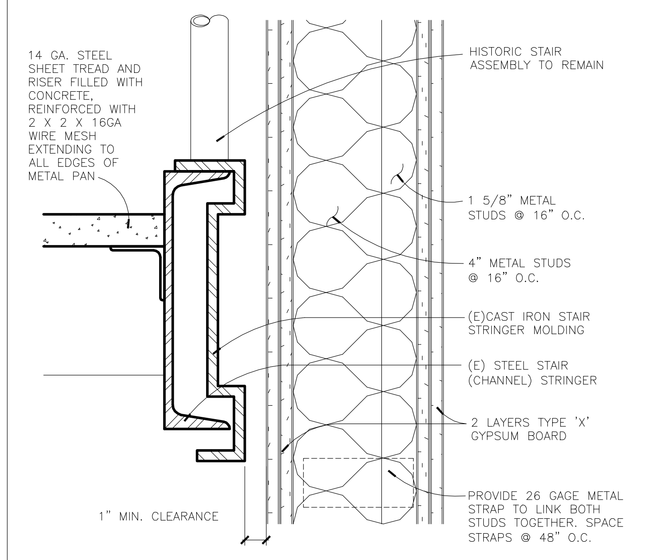

DETAILS | SCALE: 3"=1'-0" | 12

NOT USED | SCALE: 1 1/2"=1'-0" | 8

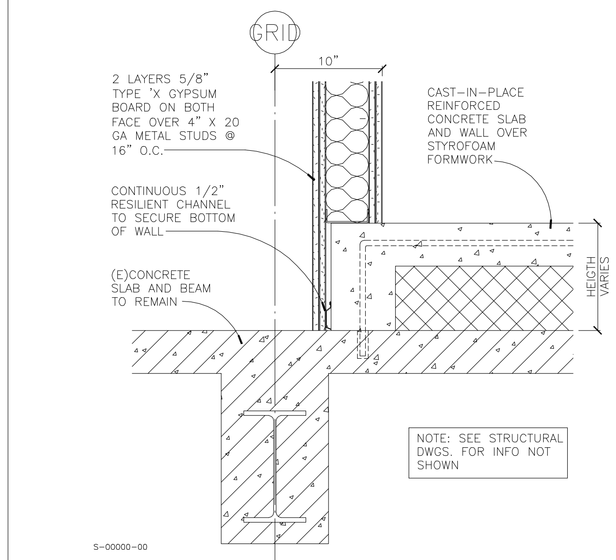

DETAILS | SCALE: 1 1/2"=1'-0" | 4

ALL DRAWINGS AND WRITTEN MATERIAL APPEARING HEREIN CONSTITUTE THE ORIGINAL AND UNPUBLISHED WORK OF THE ARCHITECT AND THE SAME MAY NOT BE DUPLICATED, USED OR DISCLOSED WITHOUT THE WRITTEN CONSENT OF THE ARCHITECT. COPYRIGHT: NADEL ARCHITECTS INC. ALL RIGHTS RESERVED.

NADEL
Architects Inc.

1990 So. Bundy Dr.
Fourth Floor
Los Angeles, CA 90025

T. 310.826.2100
F. 310.826.0182

www.nadelarc.com

CONSULTANT

COUNTY OF LOS ANGELES
THE HALL OF JUSTICE
STRUCTURAL RETROFIT PHASE

REVISIONS

1	
2	
3	
4	
5	
6	

DRAWING TITLE

DETAILS

SCALE :
DATE :
JOB NO :
SHEET NO.

A5.09

SCOPING DOCUMENTS 100% SUBMISSION AUGUST 2010

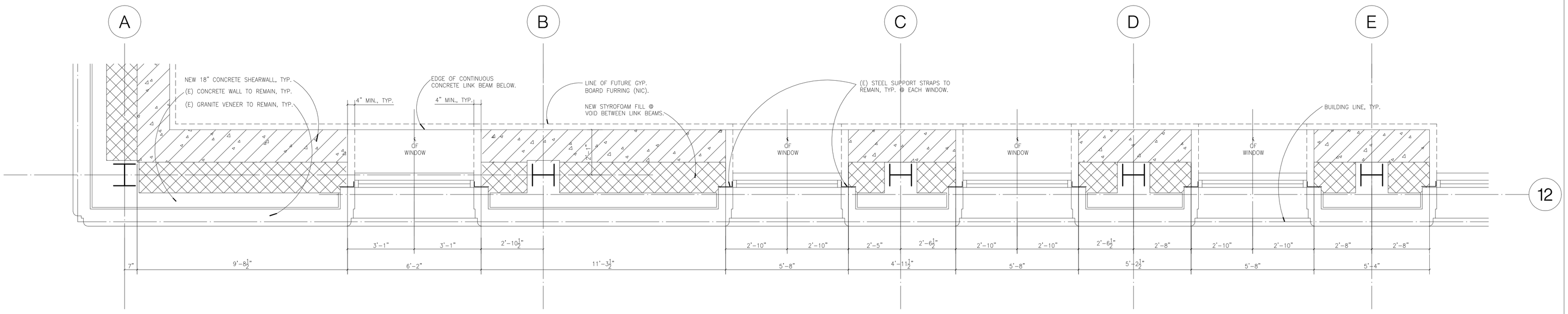

PARTIAL FIFTH FLOOR PLAN - SHEARWALL — SCALE: 1/2"=1'-0" — 4

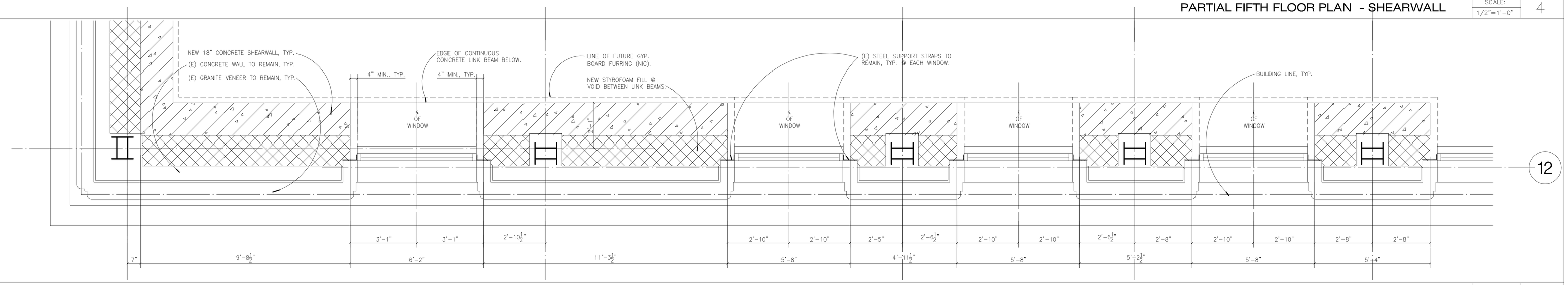

PARTIAL FOURTH FLOOR PLAN - SHEARWALL — SCALE: 1/2"=1'-0" — 3

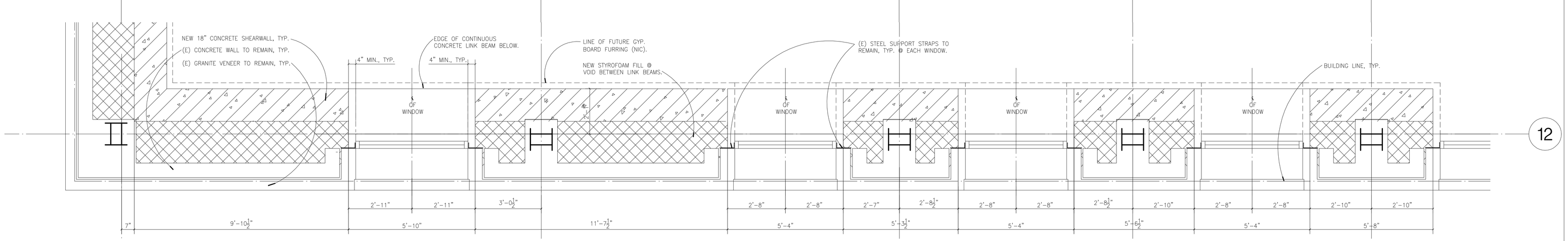

PARTIAL THIRD FLOOR PLAN (SECOND FLOOR SIM.) - SHEARWALL — SCALE: 1/2"=1'-0" — 2

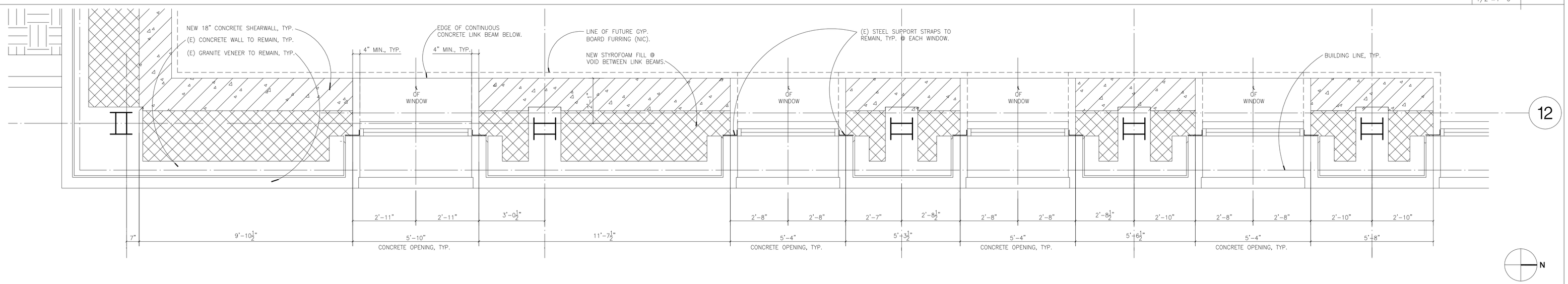

PARTIAL FIRST FLOOR PLAN - SHEARWALL — SCALE: 1/2"=1'-0" — 1

NADEL
Architects Inc.

1990 So. Bundy Dr.
Fourth Floor
Los Angeles, CA 90025

T. 310.826.2100
F. 310.826.0182

www.nadelarc.com

CONSULTANT

COUNTY OF LOS ANGELES
THE HALL OF JUSTICE
STRUCTURAL RETROFIT PHASE

REVISIONS

1	
2	
3	
4	
5	
6	

DRAWING TITLE

ENLARGED PLANS - SHEARWALL

SCALE : 1/2"=1'-0"
DATE :
JOB NO :
SHEET NO.

A6.01

SCOPING DOCUMENTS
100% SUBMISSION
AUGUST 2010

ALL DRAWINGS AND WRITTEN MATERIAL APPEARING HEREIN CONSTITUTE THE ORIGINAL AND UNPUBLISHED WORK OF THE ARCHITECT AND THE SAME MAY NOT BE DUPLICATED, USED OR DISCLOSED WITHOUT THE WRITTEN CONSENT OF THE ARCHTECT. COPYRIGHT: NADEL ARCHITECTS INC. ALL RIGHTS RESERVED.

ALL DRAWINGS AND WRITTEN MATERIAL APPEARING HEREIN CONSTITUTE THE ORIGINAL AND UNPUBLISHED WORK OF THE ARCHITECT AND THE SAME MAY NOT BE DUPLICATED, USED OR DISCLOSED WITHOUT THE WRITTEN CONSENT OF THE ARCHITECT. COPYRIGHT: NADEL ARCHITECTS INC. ALL RIGHTS RESERVED.

PARTIAL SIXTH FLOOR PLAN - SHEARWALL

1 — SCALE: 1/2"=1'-0"

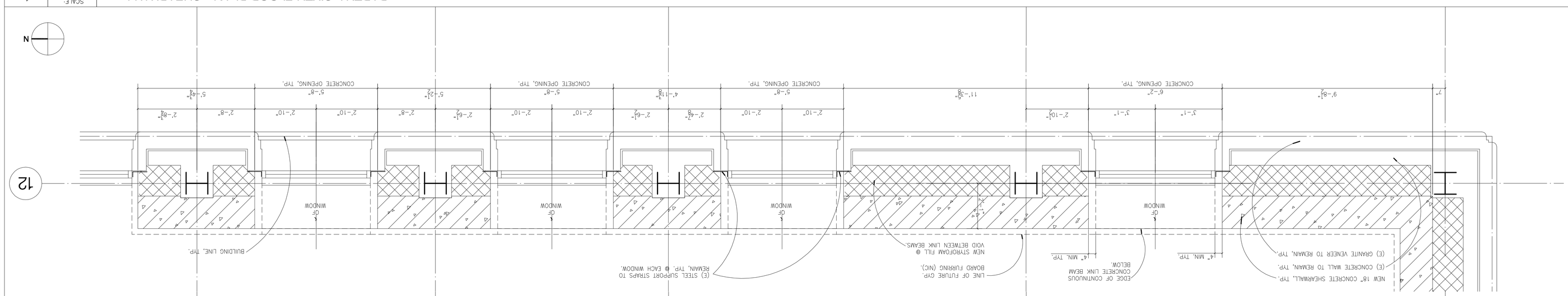

PARTIAL SEVENTH FLOOR PLAN (EIGHTH FLOOR SIM.) - SHEARWALL

2 — SCALE: 1/2"=1'-0"

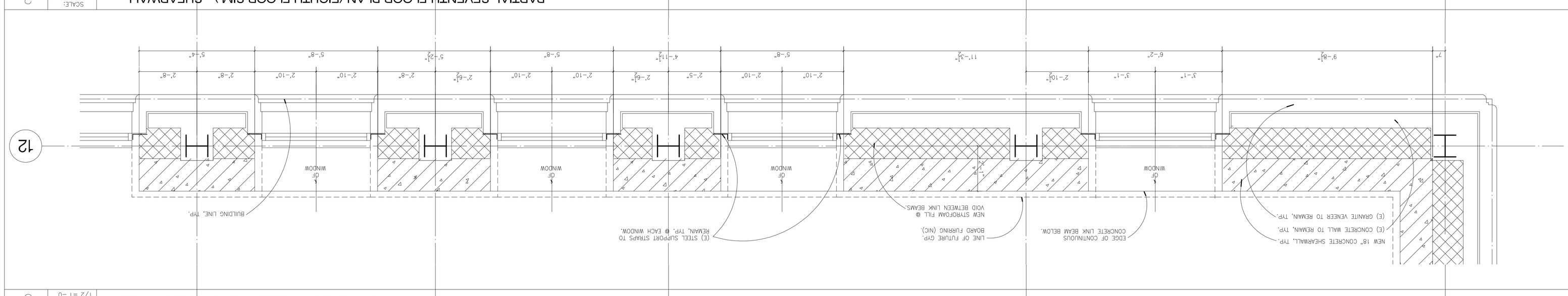

PARTIAL NINTH FLOOR PLAN - SHEARWALL

3 — SCALE: 1/2"=1'-0"

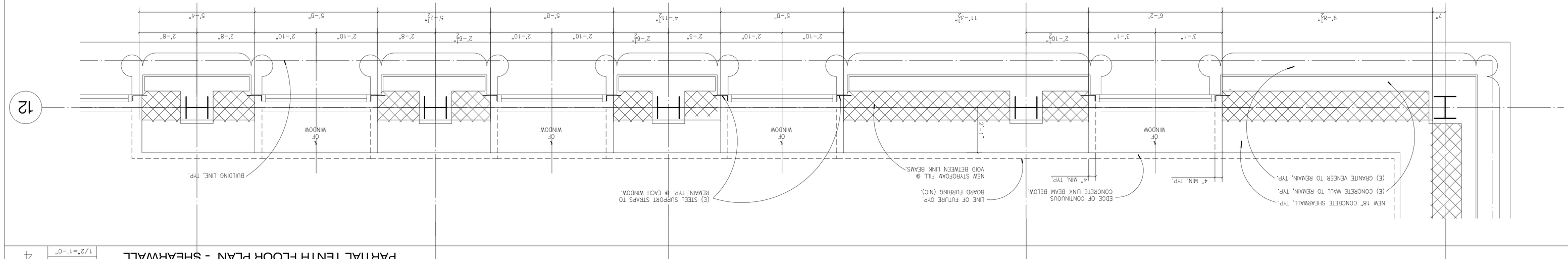

PARTIAL TENTH FLOOR PLAN - SHEARWALL

4 — SCALE: 1/2"=1'-0"

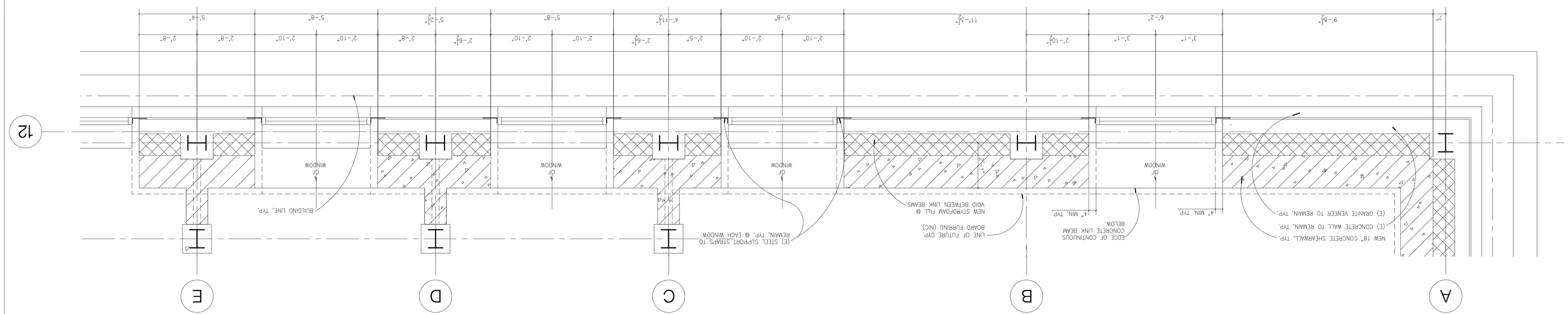

SCOPING DOCUMENTS 100% SUBMISSION AUGUST 2010

ENLARGED PLAN - SHEARWALL

SCALE : 1/2"=1'-0"
DATE :
JOB NO :
SHEET NO. **A6.02**

DRAWING TITLE

REVISIONS

1	
2	
3	
4	
5	
6	

COUNTY OF LOS ANGELES
THE HALL OF JUSTICE
STRUCTURAL RETROFIT PHASE

CONSULTANT

NADEL Architects Inc.
1990 So. Bundy Dr.
Fourth Floor
Los Angeles, CA 90025
T. 310.826.2100
F. 310.826.0182
www.nadelarc.com

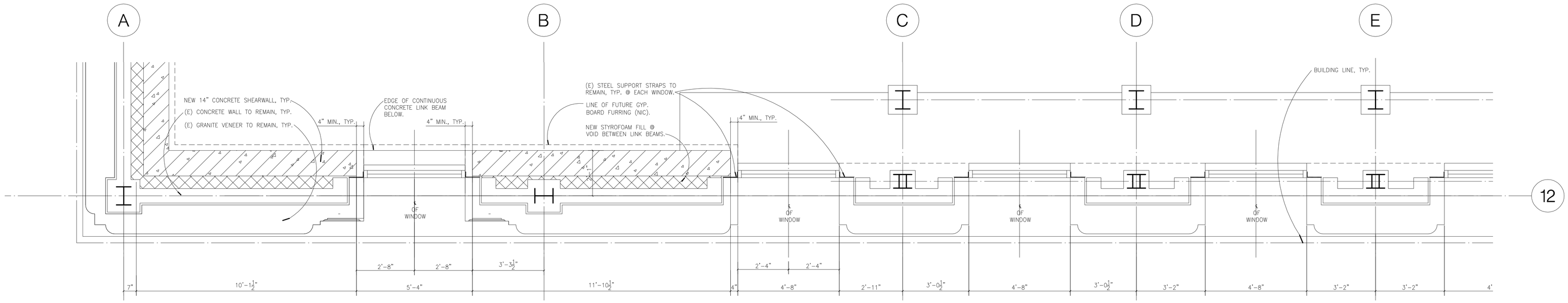

PARTIAL FOURTEENTH FLOOR PLAN - SHEARWALL — SCALE: 1/2"=1'-0" — 4

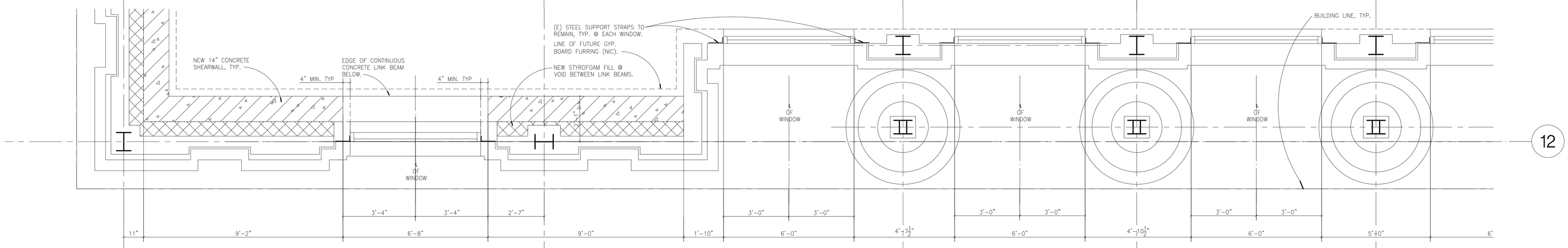

PARTIAL THIRTEENTH FLOOR PLAN - SHEARWALL — SCALE: 1/2"=1'-0" — 3

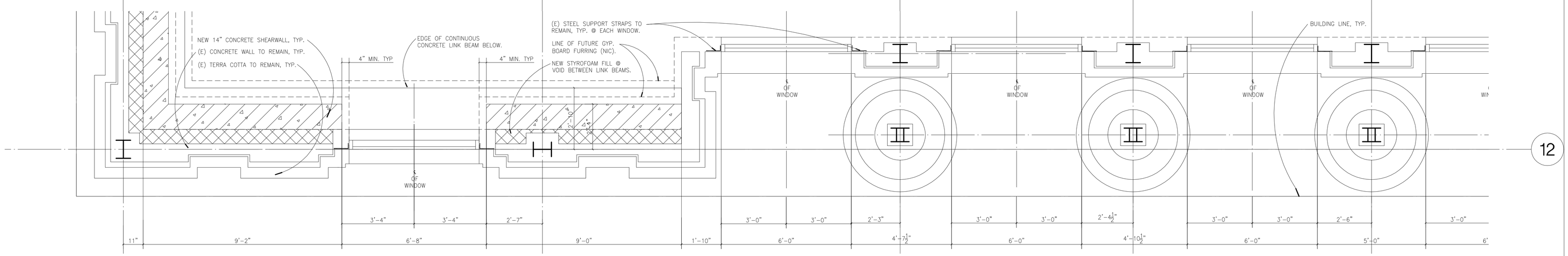

PARTIAL TWELFTH FLOOR PLAN - SHEARWALL — SCALE: 1/2"=1'-0" — 2

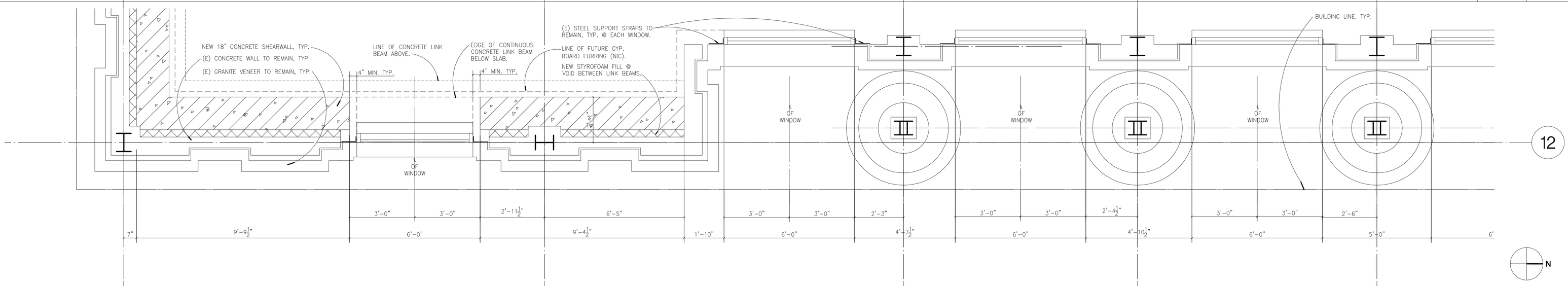

PARTIAL ELEVENTH FLOOR PLAN - SHEARWALL — SCALE: 1/2"=1'-0" — 1

NADEL
Architects Inc.

1990 So. Bundy Dr.
Fourth Floor
Los Angeles, CA 90025

T. 310.826.2100
F. 310.826.0182

www.nadelarc.com

CONSULTANT

COUNTY OF LOS ANGELES
THE HALL OF JUSTICE
STRUCTURAL RETROFIT PHASE

REVISIONS

DRAWING TITLE

ENLARGED PLANS - SHEARWALL

SCALE : 1/2"=1'-0"
DATE :
JOB NO :
SHEET NO.

A6.03

AUGUST 2010
100% SUBMISSION
SCOPING DOCUMENTS

ALL DRAWINGS AND WRITTEN MATERIAL APPEARING HEREIN CONSTITUTE THE ORIGINAL AND UNPUBLISHED WORK OF THE ARCHITECT AND THE SAME MAY NOT BE DUPLICATED, USED OR DISCLOSED WITHOUT THE WRITTEN CONSENT OF THE ARCHITECT. COPYRIGHT: NADEL ARCHITECTS INC. ALL RIGHTS RESERVED.

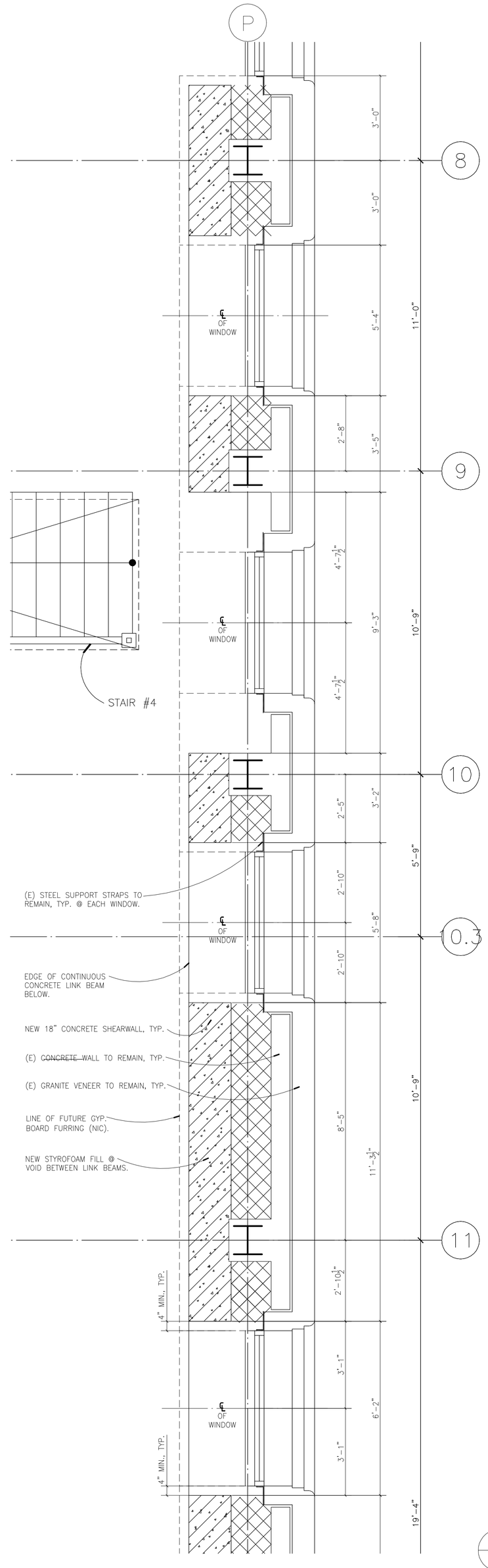

PARTIAL EIGHTH FLOOR PLAN (7th & 9th FLOOR SIM.)

SCALE: 3/8"=1'-0"

1

NADEL
Architects Inc.

1990 So. Bundy Dr.
Fourth Floor
Los Angeles, CA 90025

T. 310.826.2100
F. 310.826.0182

www.nadelarc.com

CONSULTANT

COUNTY OF LOS ANGELES
THE HALL OF JUSTICE
STRUCTURAL RETROFIT PHASE

REVISIONS

△	
△	
△	
△	
△	
△	

DRAWING TITLE

FLOOR PLAN
PARTIAL EIGHTH

SCOPING DOCUMENTS 100% SUBMISSION AUGUST 2010

SCALE : 1/8"=1'-0"
DATE :
JOB NO :
SHEET NO.

A6.04

ALL DRAWINGS AND WRITTEN MATERIAL APPEARING HEREIN CONSTITUTE THE ORIGINAL AND UNPUBLISHED WORK OF THE ARCHITECT AND THE SAME MAY NOT BE DUPLICATED, USED OR DISCLOSED WITHOUT THE WRITTEN CONSENT OF THE ARCHITECT. COPYRIGHT: NADEL ARCHITECTS INC. ALL RIGHTS RESERVED.

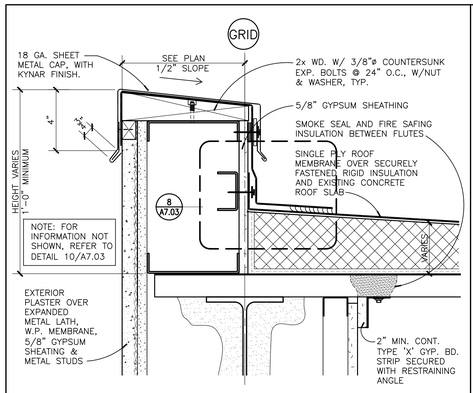

ROOF PARAPET DETAIL | SCALE: 3"=1'-0" | 17

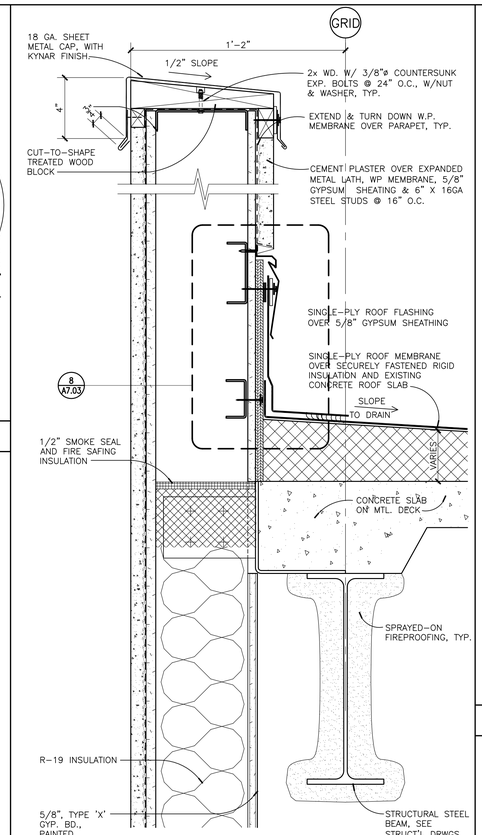

ROOF PARAPET DETAIL | SCALE: 3"=1'-0" | 14

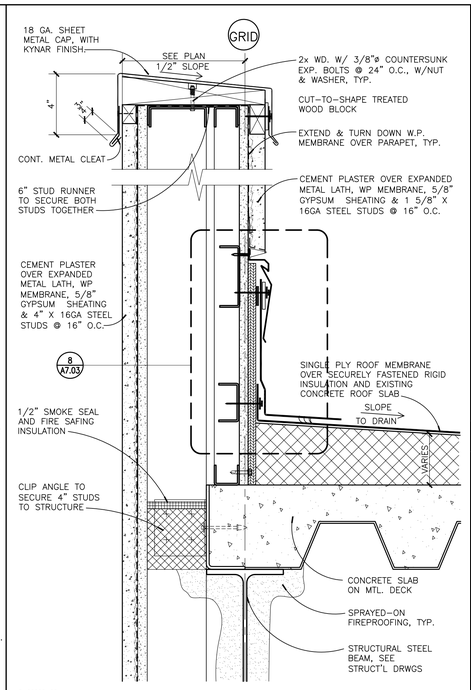

ROOF PARAPET DETAIL | SCALE: 3"=1'-0" | 10

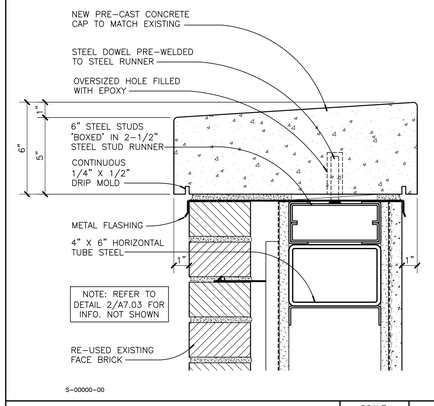

DETAILS OF NEW CONCRETE CAP | SCALE: 3"=1'-0" | 5

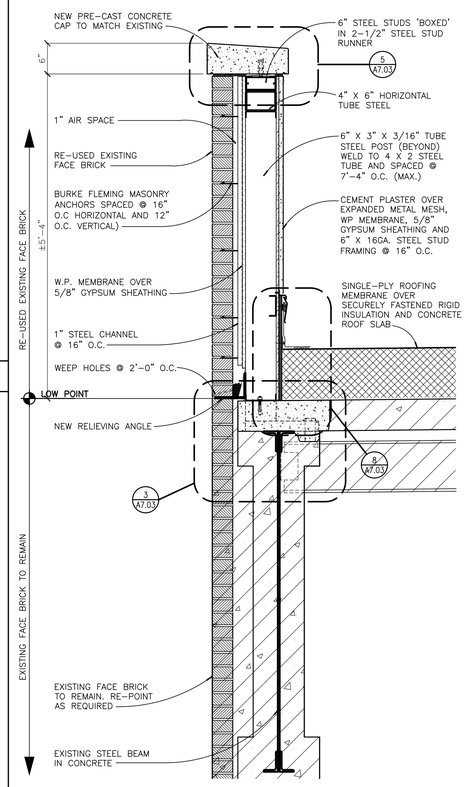

TYPICAL PARAPET DETAIL | SCALE: 1" =1'-0" | 2

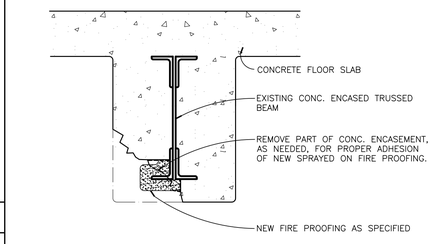

NOTE:
WHERE CONCRETE FIRE PROTECTION HAS SPALLED OFF OR HAS BEEN DAMAGED DURING CONSTRUCTION, PROVIDE 2 HR SPRAYED ON FIRE PROOFING TO MEET CODE.

TYPICAL BEAM DETAIL | SCALE: 1-1/2"=1'-0" | 6

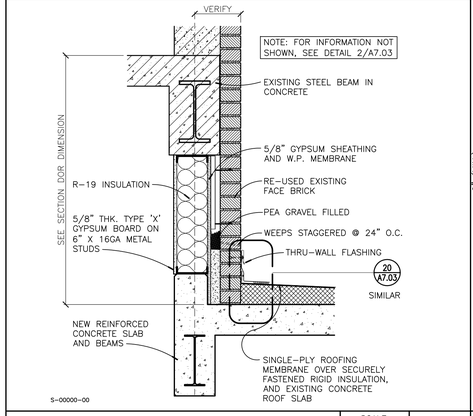

NEW ROOF BASE DETAIL | SCALE: 1"=1'-0" | 19

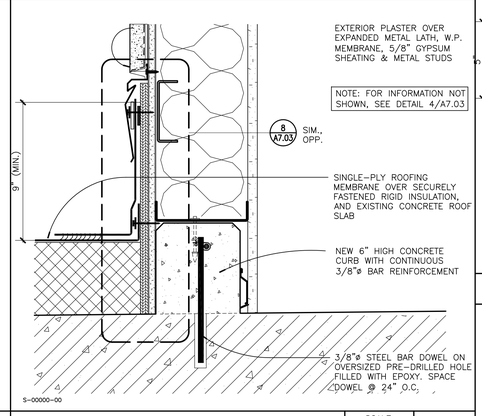

WALL BASE DETAIL | SCALE: 3"=1'-0" | 15

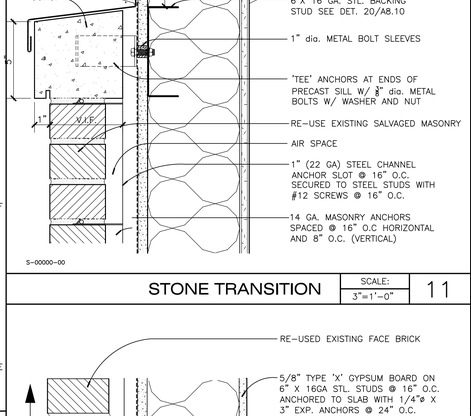

STONE TRANSITION | SCALE: 3"=1'-0" | 11

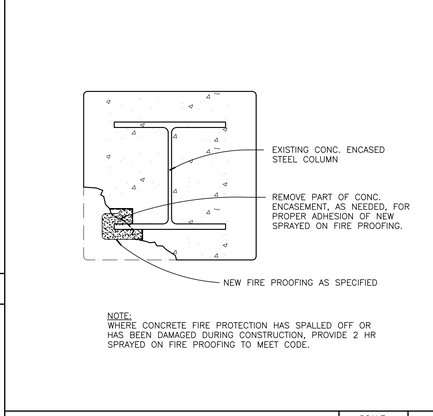

NOTE:
WHERE CONCRETE FIRE PROTECTION HAS SPALLED OFF OR HAS BEEN DAMAGED DURING CONSTRUCTION, PROVIDE 2 HR SPRAYED ON FIRE PROOFING TO MEET CODE.

TYPICAL BEAM DETAIL | SCALE: 1-1/2"=1'-0" | 7

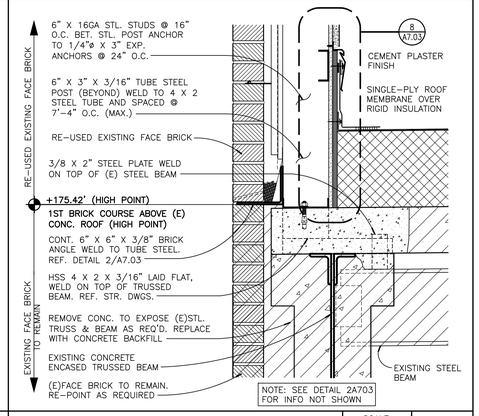

DETAIL | SCALE: 1" 1/2"=1'-0" | 3

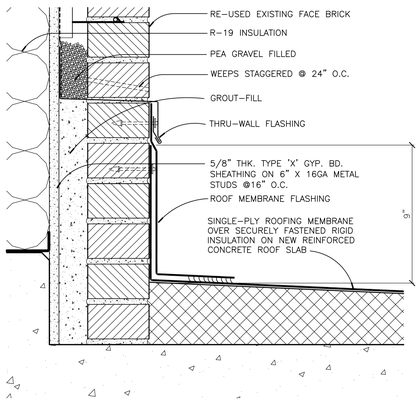

DETAIL | SCALE: 1 1/2"=1'-0" | 20

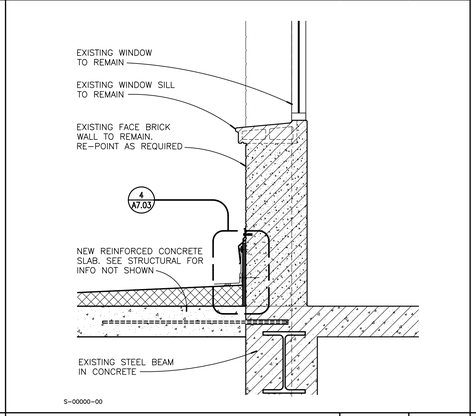

(N)ROOF / (E)WALL INTERSECTION | SCALE: 1"=1'-0" | 16

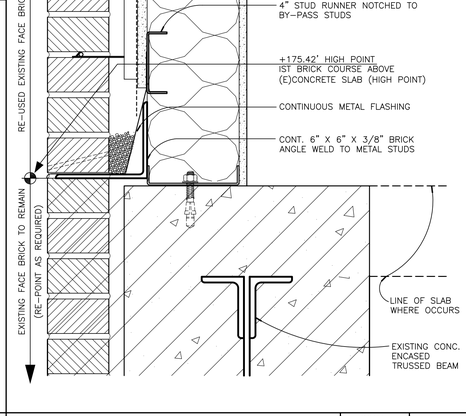

(E)/(N) FACE BRICK TRANSITION | SCALE: 3"=1'-0" | 12

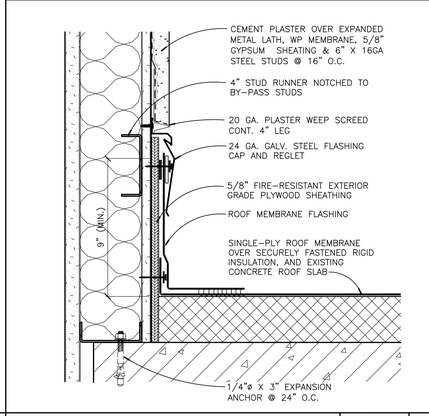

WALL BASE AT ROOF | SCALE: 3"=1'-0" | 8

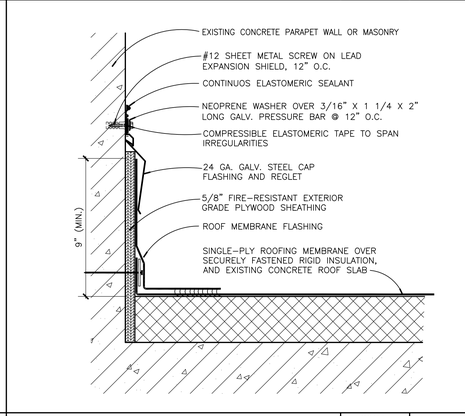

S-00000-00

PARAPET FLASHING DETAIL | SCALE: 3"=1'-0" | 4

NADEL
Architects Inc.
1990 So. Bundy Dr.
Fourth Floor
Los Angeles, CA 90025
T. 310.826.2100
F. 310.826.0182
www.nadelarc.com

CONSULTANT

COUNTY OF LOS ANGELES
THE HALL OF JUSTICE
STRUCTURAL RETROFIT PHASE

REVISIONS

1	
2	
3	
4	
5	
6	

DRAWING TITLE

TYPICAL ROOFING DETAILS

SCOPING DOCUMENTS 100% SUBMISSION AUGUST 2010

SCALE :
DATE :
JOB NO :
SHEET NO.

A7.03

ALL DRAWINGS AND WRITTEN MATERIAL APPEARING HEREIN CONSTITUTE THE ORIGINAL AND UNPUBLISHED WORK OF THE ARCHITECT AND THE SAME MAY NOT BE DUPLICATED, USED OR DISCLOSED WITHOUT THE WRITTEN CONSENT OF THE ARCHITECT. COPYRIGHT: NADEL ARCHITECTS INC. ALL RIGHTS RESERVED.

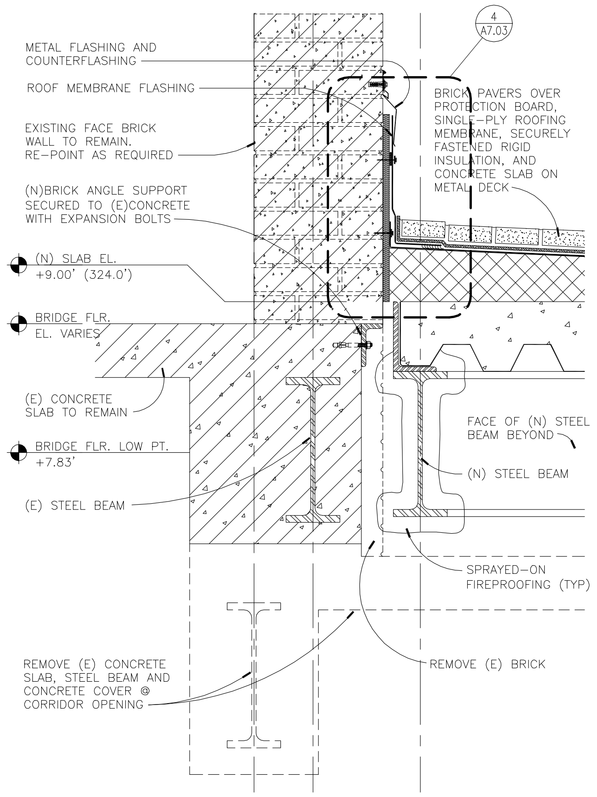

(N)ROOF OVER CORRIDOR | SCALE: 1 1/2"=1'-0" | 18

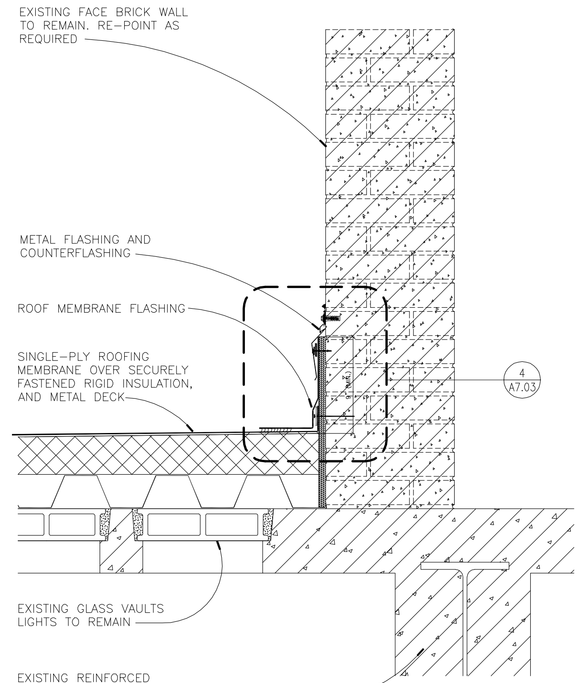

(N)ROOF OVER (E) SKYLIGHT | SCALE: 1 1/2"=1'-0" | 19

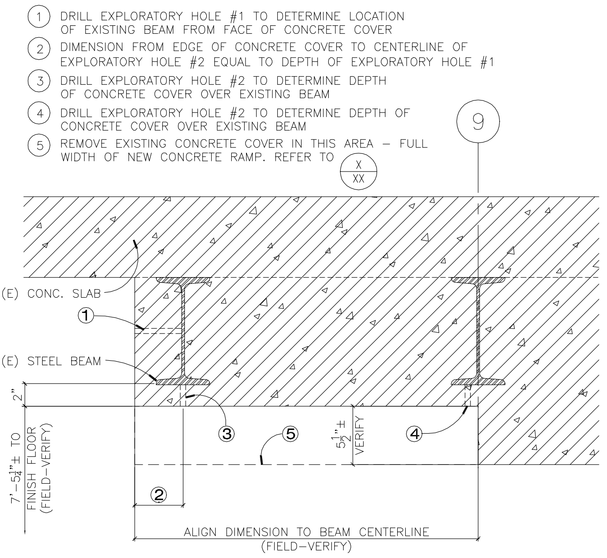

DETAILS | SCALE: 1 1/2"=1'-0" | 13

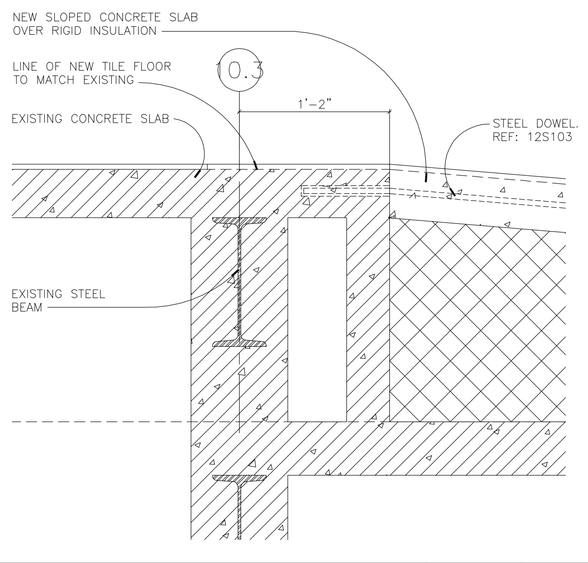

DETAILS | SCALE: 1 1/2"=1'-0" | 14

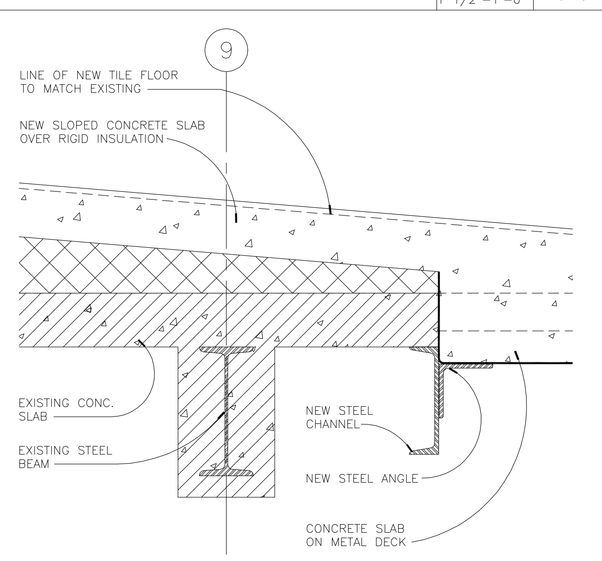

DETAILS | SCALE: 1 1/2"=1'-0" | 15

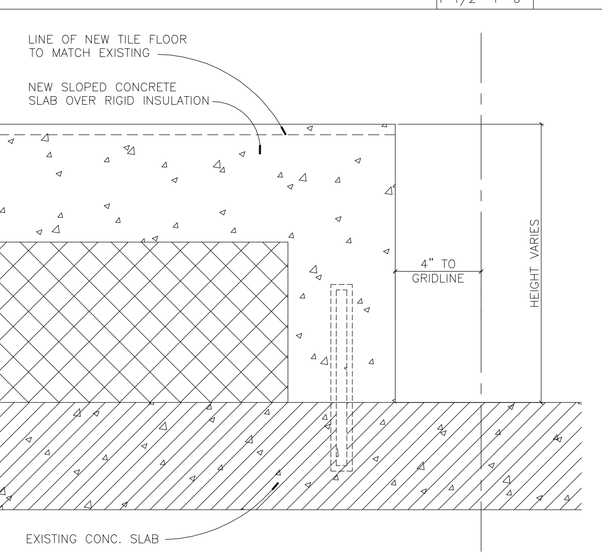

DETAILS | SCALE: 1 1/2"=1'-0" | 20

DETAILS | SCALE: 1 1/2"=1'-0" | 16

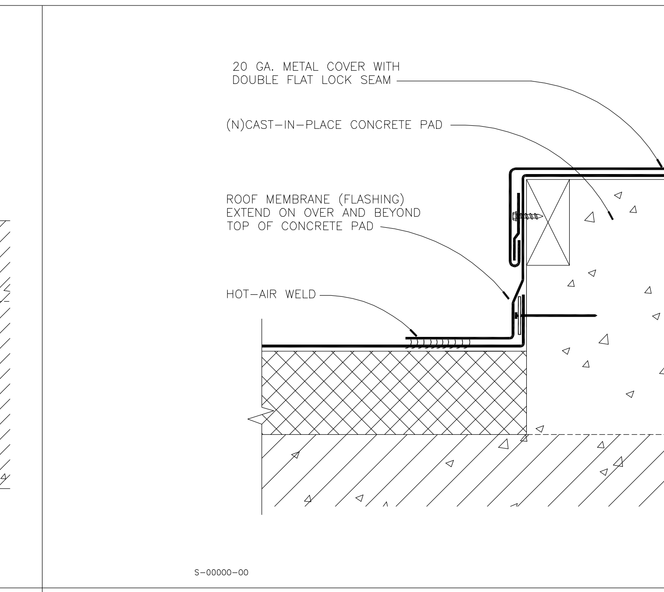

HOUSEKEEPING PAD DETAILS | SCALE: 3"=1'-0" | 5

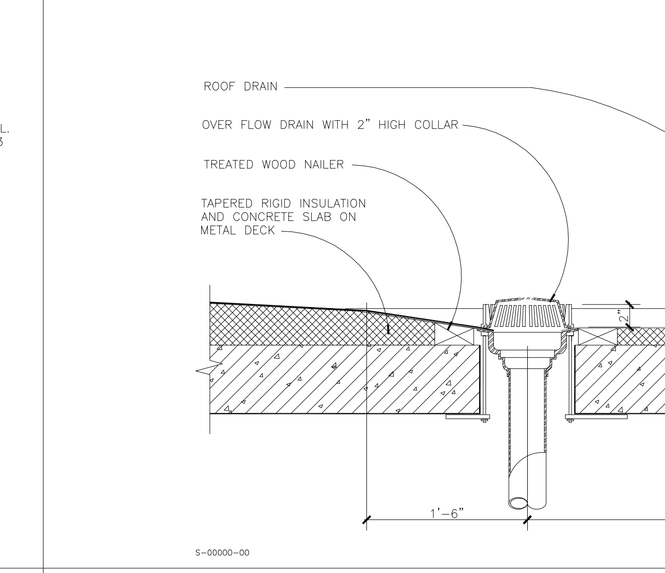

ROOF AND OVERFLOW DRAIN DETAILS | SCALE: 1 1/2"=1'-0" | 6

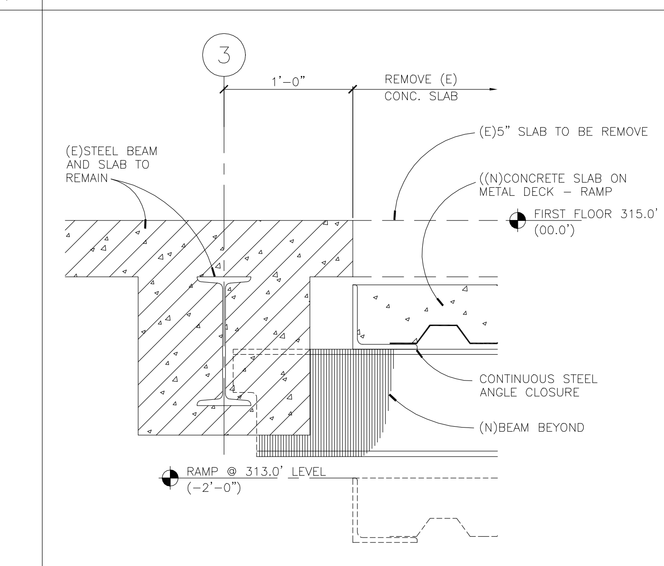

DETAILS | SCALE: 1 1/2"=1'-0" | 11

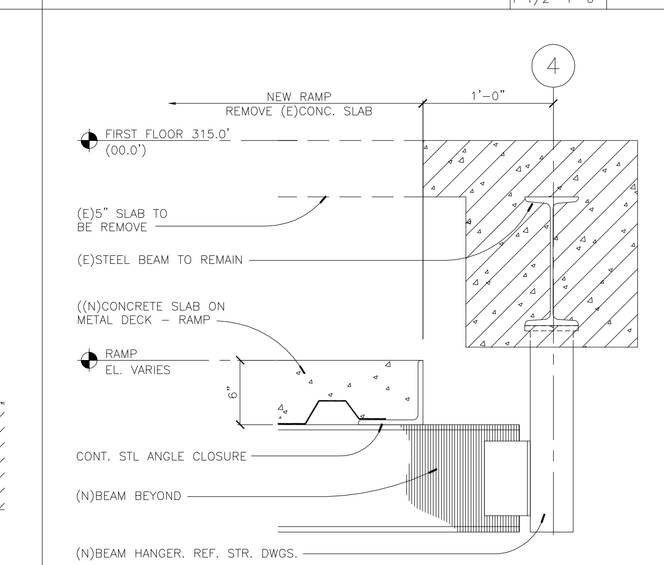

DETAILS | SCALE: 1 1/2"=1'-0" | 12

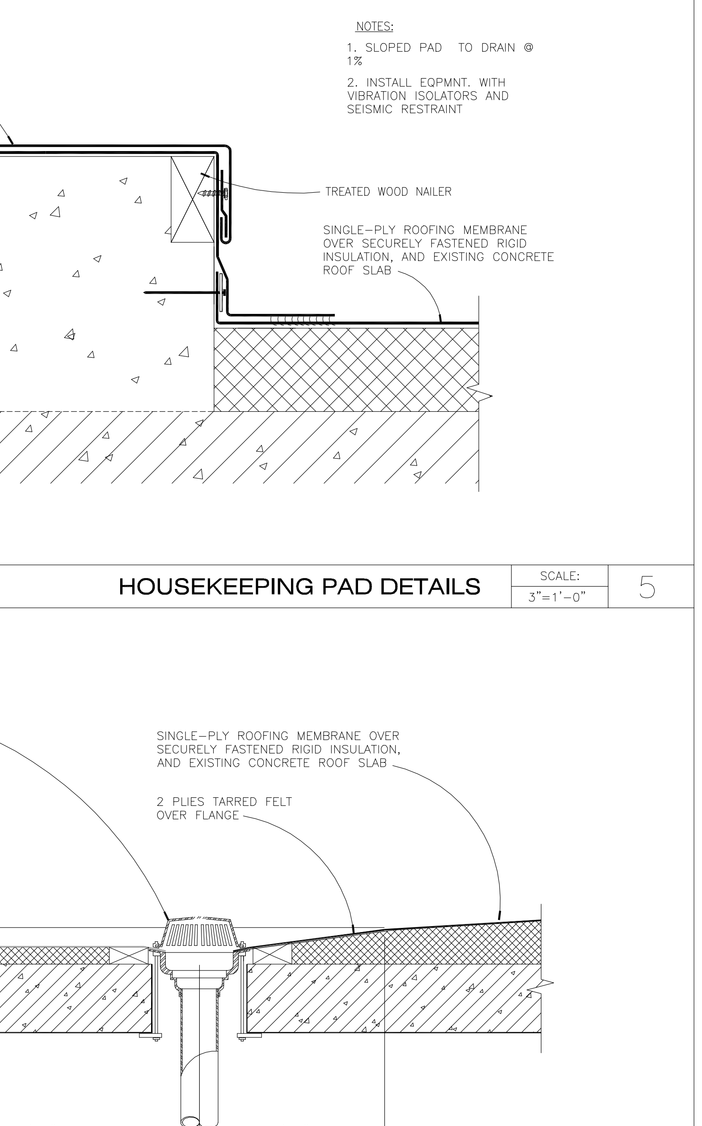

DETAILS | SCALE: 1/4"=1'-0" | 8

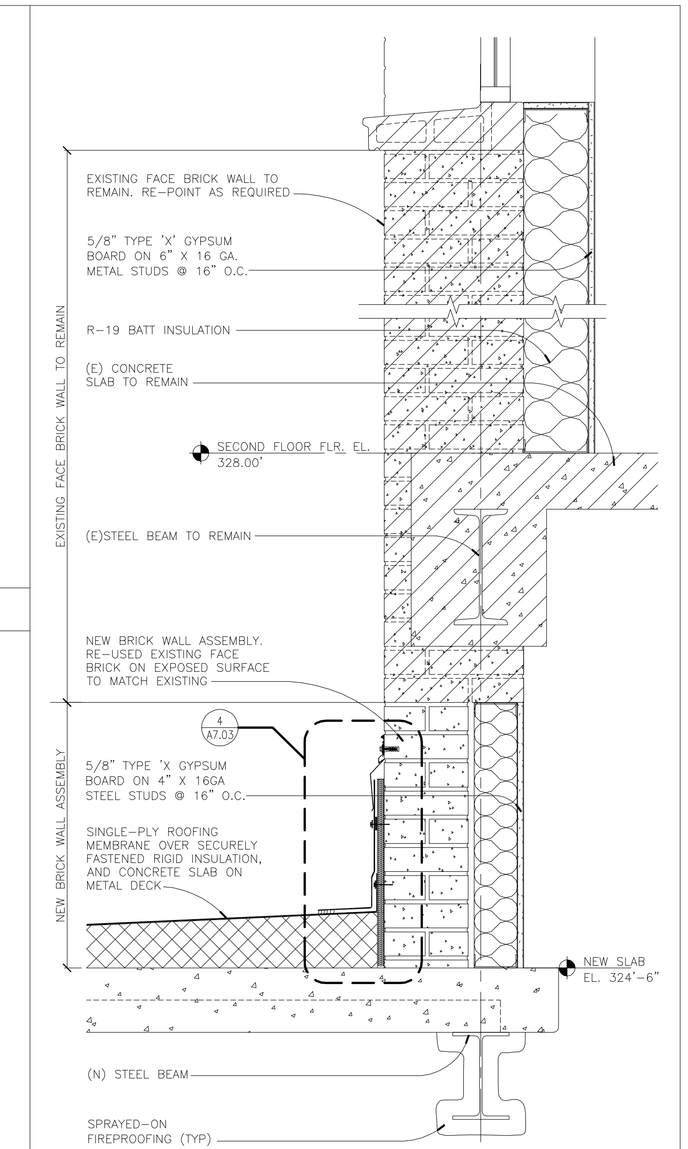

DETAIL | SCALE: 1 1/2"=1'-0" | 2

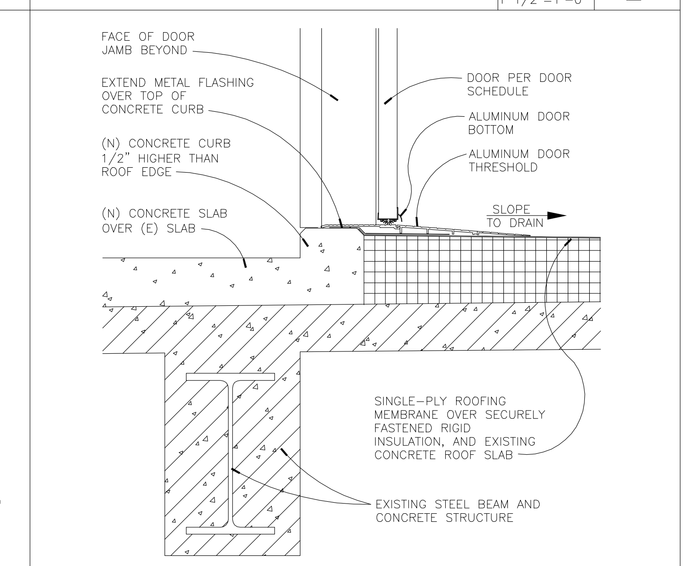

SLAB/ROOF TRANSITION | SCALE: 1 1/2"=1'-0" | 3

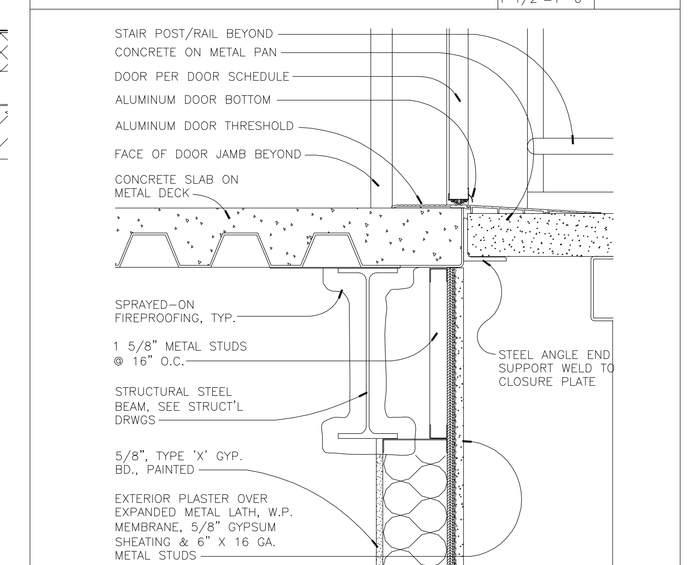

STAIR LANDING/SLAB TRANSITION | SCALE: 1/2" =1'-0" | 4

NADEL Architects Inc.
1990 So. Bundy Dr.
Fourth Floor
Los Angeles, CA 90025
T. 310.826.2100
F. 310.826.0182
www.nadelarc.com

CONSULTANT

COUNTY OF LOS ANGELES
THE HALL OF JUSTICE
STRUCTURAL RETROFIT PHASE

REVISIONS

DRAWING TITLE

DETAILS

SCALE :
DATE :
JOB NO :
SHEET NO.
A7.04

SCOPING DOCUMENTS 100% SUBMISSION AUGUST 2010

ALL DRAWINGS AND WRITTEN MATERIAL APPEARING HEREIN CONSTITUTE THE ORIGINAL AND UNPUBLISHED WORK OF THE ARCHITECT AND THE SAME MAY NOT BE DUPLICATED, USED OR DISCLOSED WITHOUT THE WRITTEN CONSENT OF THE ARCHITECT. COPYRIGHT: NADEL ARCHITECTS INC. ALL RIGHTS RESERVED.

ALL DRAWINGS AND WRITTEN MATERIAL APPEARING HEREIN CONSTITUTE THE ORIGINAL AND UNPUBLISHED WORK OF THE ARCHITECT AND THE SAME MAY NOT BE DUPLICATED, USED OR DISCLOSED WITHOUT THE WRITTEN CONSENT OF THE ARCHITECT. COPYRIGHT: NADEL ARCHITECTS INC. ALL RIGHTS RESERVED.

SCOPING DOCUMENTS 100% SUBMISSION AUGUST 2010

COUNTY OF LOS ANGELES
THE HALL OF JUSTICE
STRUCTURAL RETROFIT PHASE

REVISIONS

DRAWING TITLE

PARTIAL RAMP SECTIONS AND DETAILS

SCALE :
DATE :
JOB NO :
SHEET NO.

A7.05

CONSULTANT

NADEL Architects Inc.
1990 So. Bundy Dr.
Fourth Floor
Los Angeles, CA 90025
T. 310.826.2100
F. 310.826.0182
www.nadelarc.com

1 PARTIAL SECTION — SCALE: 1/4"=1'-0"

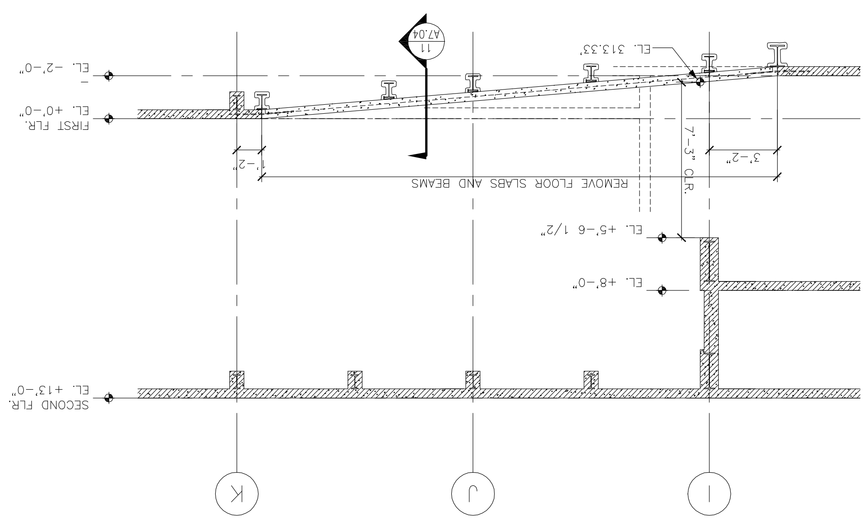

2 PARTIAL SECTION — SCALE: 1/4"=1'-0"

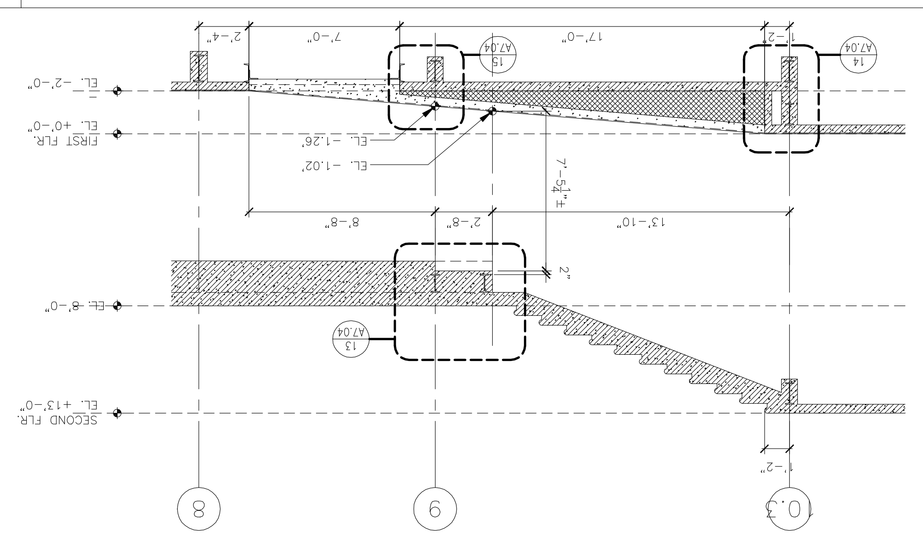

3 DETAILS — SCALE: 1 1/2"=1'-0"

4 DETAILS — SCALE: 1 1/2"=1'-0"

8 DETAILS — SCALE: 1 1/2"=1'-0"

9 DETAILS — SCALE: 1 1/2"=1'-0"

10 DETAILS — SCALE: 1 1/2"=1'-0"

11 DETAILS — SCALE: 1 1/2"=1'-0"

12 DETAILS — SCALE: 1 1/2"=1'-0"

13 DETAILS — SCALE: 1 1/2"=1'-0"

14 DETAILS — SCALE: 1 1/2"=1'-0"

15 DETAILS — SCALE: 1 1/2"=1'-0"

16 DETAILS — SCALE: 1 1/2"=1'-0"

17 DETAILS — SCALE: 1 1/2"=1'-0"

18 DETAILS — SCALE: 1 1/2"=1'-0"

19 DETAILS — SCALE: 1 1/2"=1'-0"

20 DETAILS — SCALE: 1 1/2"=1'-0"

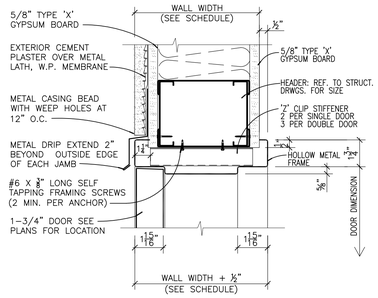

DOOR HEAD AT EXT. PLASTER WALL | SCALE: 3"=1'–0" | 8

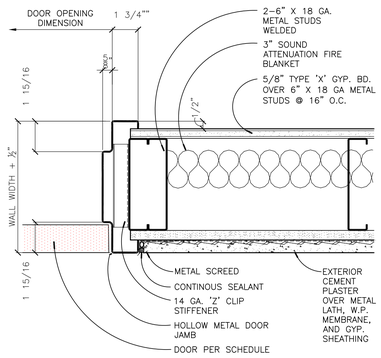

DOOR JAMB AT EXT. PLASTER WALL | SCALE: 3"=1'–0" | 4

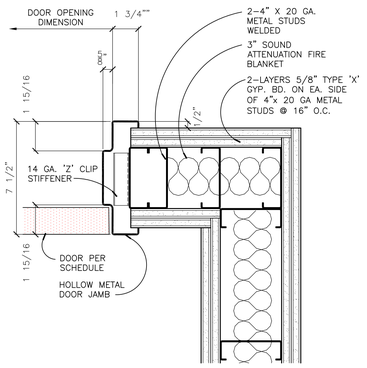

DOOR JAMB AT 2 HR WALL | SCALE: 3"=1'–0" | 7

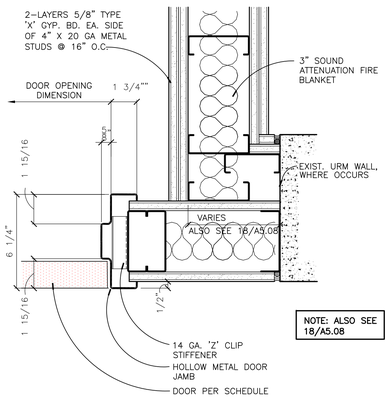

DOOR JAMB NEAR CONC. WALL | SCALE: 3"=1'–0" | 3

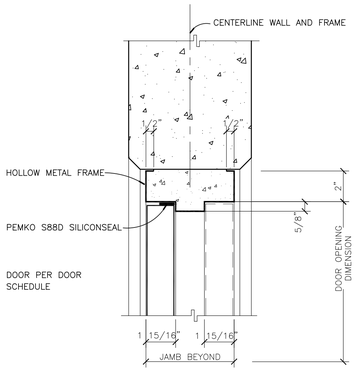

DOOR HEAD AT CONC. WALL | SCALE: 3"=1'–0" | 6

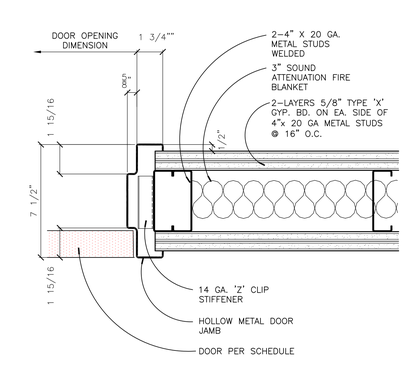

DOOR JAMB AT 2 HR WALL(HEAD SIM.) | SCALE: 3"=1'–0" | 2

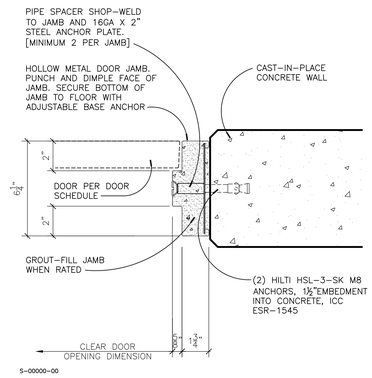

DOOR JAMB AT CONC. WALL | SCALE: 3"=1'–0" | 5

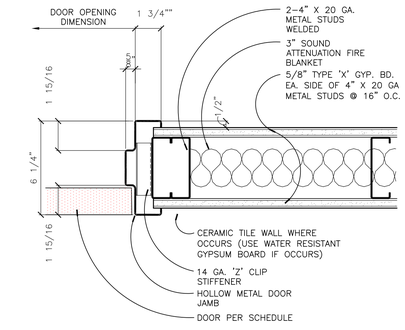

DOOR JAMB AT 1 HR WALL(HEAD SIM.) | SCALE: 3"=1'–0" | 1

DOOR SCHEDULE

DOOR NO.	DOOR TYPE / ELEVATION NO.	N-NEW OR E-EXISTING TO REMAIN EXX-NO. OF RELOCATED EXISTING DOORS	SIZE	THICKNESS	MATERIAL: DOOR	MATERIAL: FRAME	FINISH: DOOR	FINISH: FRAME	DETAIL: HEAD	DETAIL: JAMB (STRIKE)	DETAIL: JAMB (HINGE)	DETAIL: SILL	HARDWARE SET	UL FIRE RATING ASSEMBLY-HOUR	REMARKS
			BASEMENT LEVEL												
B01	A	xx	3'–2"x7'–0"	1–3/4"	HM	HM	PAINT	PAINT	2/A8.01	2/A8.01	7/A8.01	XX	1	90 MIN	PANIC HARDWARE
B02	A		3'–2"x7'–0"	1–3/4"	HM	HM	PAINT	PAINT	2/A8.01	2/A8.01	7/A8.01		1	90 MIN	PANIC HARDWARE
			FIRST FLOOR												
101	C		3'–0"x6'–10"	1–3/4"	HM	HM	PAINT	PAINT					2		PANIC HARDWARE
102	B		2'–11 5/16"x6'–10"	1–3/4"	HM	HM	PAINT	PAINT					2		PANIC HARDWARE
103	A		3'–1/8"x6'–10"	1–3/4"	HM	HM	PAINT	PAINT					3		
104	A		3'–1/8"x6'–10"	1–3/4"	HM	HM	PAINT	PAINT					3		
105–107	SEE HISTORIC DRAWINGS HA3.01–HA3.04 & HA7.10														SEE HISTORIC DRAWINGS HA3.01–HA3.04 & HA7.10
108.1	A		3'–2"x7'–0"	1–3/4"	WD	HM	PAINT	PAINT	2/A8.01	2/A8.01	7/A8.01		4	90 MIN	
108.2	A		3'–2"x7'–0"	1–3/4"	HM	HM	PAINT	PAINT	1/A8.01	1/A8.01	1/A8.01		5	20 MIN	SMOKE SEAL
109	A		3'–0"x7'–0"	1–3/4"	WD	HM	PAINT	PAINT	2/A8.01	7/A8.01	5/A8.01		6	90 MIN	
110.1	A		3'–2"x7'–0"	1–3/4"	WD	HM	PAINT	PAINT	2/A8.01	2/A8.01	7/A8.01		4	90 MIN	
110.2	A		3'–2"x7'–0"	1–3/4"	HM	HM	PAINT	PAINT	1/A8.01	1/A8.01	1/A8.01		5	20 MIN	SMOKE SEAL
111	A		3'–0"x7'–0"	1–3/4"	WD	HM	PAINT	PAINT	2/A8.01	2/A8.01	7/A8.01		6	90 MIN	
112	D		12'–8"x11'–6"		STL	STL							7		
			SECOND FLOOR												
201.1	A		3'–2"x7'–0"	1–3/4"	WD	HM	PAINT	PAINT	2/A8.01	2/A8.01	7/A8.01		5	90 MIN	
201.2	A		3'–2"x7'–0"	1–3/4"	HM	HM	PAINT	PAINT	1/A8.01	1/A8.01	3/A8.01		6	20 MIN	SMOKE SEAL
202.1	A		3'–2"x7'–0"	1–3/4"	WD	HM	PAINT	PAINT	2/A8.01	2/A8.01	7/A8.01		5	90 MIN	
202.2	A		3'–2"x7'–0"	1–3/4"	HM	HM	PAINT	PAINT	1/A8.01	1/A8.01	1/A8.01		6	20 MIN	SMOKE SEAL
			THIRD FLOOR												
301.1	A		3'–2"x7'–0"	1–3/4"	WD	HM	PAINT	PAINT	2/A8.01	2/A8.01	7/A8.01		5	90 MIN	
301.2	A		3'–2"x7'–0"	1–3/4"	HM	HM	PAINT	PAINT	1/A8.01	1/A8.01	3/A8.01		6	20 MIN	SMOKE SEAL
302.1	A		3'–2"x7'–0"	1–3/4"	WD	HM	PAINT	PAINT	2/A8.01	2/A8.01	7/A8.01		5	90 MIN	
302.2	A		3'–2"x7'–0"	1–3/4"	HM	HM	PAINT	PAINT	1/A8.01	1/A8.01	1/A8.01		6	20 MIN	SMOKE SEAL
			FOURTH FLOOR												
401.1	A		3'–2"x7'–0"	1–3/4"	WD	HM	PAINT	PAINT	2/A8.01	2/A8.01	7/A8.01		5	90 MIN	
401.2	A		3'–2"x7'–0"	1–3/4"	HM	HM	PAINT	PAINT	1/A8.01	1/A8.01	3/A8.01		6	20 MIN	SMOKE SEAL
402.1	A		3'–2"x7'–0"	1–3/4"	WD	HM	PAINT	PAINT	2/A8.01	2/A8.01	7/A8.01		5	90 MIN	
402.2	A		3'–2"x7'–0"	1–3/4"	HM	HM	PAINT	PAINT	1/A8.01	1/A8.01	1/A8.01		6	20 MIN	SMOKE SEAL
			FIFTH FLOOR												
501.1	A		3'–2"x7'–0"	1–3/4"	WD	HM	PAINT	PAINT	2/A8.01	2/A8.01	7/A8.01		5	90 MIN	
501.2	A		3'–2"x7'–0"	1–3/4"	HM	HM	PAINT	PAINT	1/A8.01	1/A8.01	3/A8.01		6	20 MIN	SMOKE SEAL
502.1	A		3'–2"x7'–0"	1–3/4"	WD	HM	PAINT	PAINT	2/A8.01	2/A8.01	7/A8.01		5	90 MIN	
502.2	A		3'–2"x7'–0"	1–3/4"	HM	HM	PAINT	PAINT	1/A8.01	1/A8.01	1/A8.01		6	20 MIN	SMOKE SEAL
			SIXTH FLOOR												
601.1	A		3'–2"x7'–0"	1–3/4"	WD	HM	PAINT	PAINT	2/A8.01	2/A8.01	7/A8.01		5	90 MIN	
601.2	A		3'–2"x7'–0"	1–3/4"	HM	HM	PAINT	PAINT	1/A8.01	1/A8.01	3/A8.01		6	20 MIN	SMOKE SEAL
602.1	A		3'–2"x7'–0"	1–3/4"	WD	HM	PAINT	PAINT	2/A8.01	2/A8.01	7/A8.01		5	90 MIN	
602.2	A		3'–2"x7'–0"	1–3/4"	HM	HM	PAINT	PAINT	1/A8.01	1/A8.01	1/A8.01		6	20 MIN	SMOKE SEAL
			SEVENTH FLOOR												
701.1	A		3'–2"x7'–0"	1–3/4"	WD	HM	PAINT	PAINT	2/A8.01	2/A8.01	7/A8.01		5	90 MIN	
701.2	A		3'–2"x7'–0"	1–3/4"	HM	HM	PAINT	PAINT	1/A8.01	1/A8.01	3/A8.01		6	20 MIN	SMOKE SEAL
702.1	A		3'–2"x7'–0"	1–3/4"	WD	HM	PAINT	PAINT	2/A8.01	2/A8.01	7/A8.01		5	90 MIN	
702.2	A		3'–2"x7'–0"	1–3/4"	HM	HM	PAINT	PAINT	1/A8.01	1/A8.01	1/A8.01		6	20 MIN	SMOKE SEAL
			EIGHTH FLOOR												
801.1	A		3'–2"x7'–0"	1–3/4"	WD	HM	PAINT	PAINT	2/A8.01	2/A8.01	7/A8.01		5	90 MIN	
801.2	A		3'–2"x7'–0"	1–3/4"	HM	HM	PAINT	PAINT	1/A8.01	1/A8.01	3/A8.01		6	20 MIN	SMOKE SEAL
802.1	A		3'–2"x7'–0"	1–3/4"	WD	HM	PAINT	PAINT	2/A8.01	2/A8.01	7/A8.01		5	90 MIN	
802.2	A		3'–2"x7'–0"	1–3/4"	HM	HM	PAINT	PAINT	1/A8.01	1/A8.01	1/A8.01		6	20 MIN	SMOKE SEAL
			NINTH FLOOR												
901.1	A		3'–2"x7'–0"	1–3/4"	WD	HM	PAINT	PAINT	2/A8.01	2/A8.01	7/A8.01		5	90 MIN	
901.2	A		3'–2"x7'–0"	1–3/4"	HM	HM	PAINT	PAINT	1/A8.01	1/A8.01	3/A8.01		6	20 MIN	SMOKE SEAL
902.1	A		3'–2"x7'–0"	1–3/4"	WD	HM	PAINT	PAINT	2/A8.01	2/A8.01	7/A8.01		5	90 MIN	
902.2	A		3'–2"x7'–0"	1–3/4"	HM	HM	PAINT	PAINT	1/A8.01	1/A8.01	5/A8.01		6	20 MIN	SMOKE SEAL
			TENTH FLOOR												
1001.1	A		3'–2"x7'–0"	1–3/4"	WD	HM	PAINT	PAINT	2/A8.01	2/A8.01	7/A8.01		5	90 MIN	
1001.2	A		3'–2"x7'–0"	1–3/4"	HM	HM	PAINT	PAINT	1/A8.01	1/A8.01	3/A8.01		6	20 MIN	SMOKE SEAL
1002.1	A		3'–2"x7'–0"	1–3/4"	WD	HM	PAINT	PAINT	2/A8.01	2/A8.01	7/A8.01		5	90 MIN	
1002.2	A		3'–2"x7'–0"	1–3/4"	HM	HM	PAINT	PAINT	1/A8.01	1/A8.01	3/A8.01		6	20 MIN	SMOKE SEAL
			TWELFTH FLOOR												
1201.1	A		3'–2"x7'–0"	1–3/4"	WD	HM	PAINT	PAINT	2/A8.01	2/A8.01	7/A8.01		5	90 MIN	
1201.2	A		3'–2"x7'–0"	1–3/4"	HM	HM	PAINT	PAINT	1/A8.01	1/A8.01	3/A8.01		6	20 MIN	SMOKE SEAL
1202.1	A		3'–2"x7'–0"	1–3/4"	WD	HM	PAINT	PAINT	2/A8.01	2/A8.01	7/A8.01		5	90 MIN	
1202.2	A		3'–2"x7'–0"	1–3/4"	HM	HM	PAINT	PAINT	1/A8.01	1/A8.01	3/A8.01		6	20 MIN	SMOKE SEAL
			FOURTEENTH FLOOR												
1401.1	A		3'–2"x7'–0"	1–3/4"	WD	HM	PAINT	PAINT	2/A8.01	2/A8.01	7/A8.01		5	90 MIN	
1401.2	A		3'–2"x7'–0"	1–3/4"	HM	HM	PAINT	PAINT	1/A8.01	1/A8.01	3/A8.01		6	20 MIN	SMOKE SEAL
1402.1	A		3'–2"x7'–0"	1–3/4"	WD	HM	PAINT	PAINT	2/A8.01	2/A8.01	7/A8.01		5	90 MIN	
1402.2	A		3'–2"x7'–0"	1–3/4"	HM	HM	PAINT	PAINT	1/A8.01	1/A8.01	3/A8.01		6	20 MIN	SMOKE SEAL
			PENTHOUSE LEVEL												
1501	A		3'–2"x7'–0"	1–3/4"	HM	HM	PAINT	PAINT	6/A8.01	5/A8.01	5/A8.01		5	90 MIN	
1502	A		3'–2"x7'–0"	1–3/4"	HM	HM	PAINT	PAINT	6/A8.01	5/A8.01	5/A8.01		6	90 MIN	
1503.1	B		3'–0"x7'–0"	1–3/4"	HM	HM	PAINT	PAINT	8/A8.01	4/A8.01	4/A8.01		5		
1503.2	A		3'–0"x7'–0"	1–3/4"	HM	HM	PAINT	PAINT	8/A8.01	4/A8.01	4/A8.01		6		
			PENTHOUSE LEVEL 2												
1601	A		3'–0"x7'–0"	1–3/4"	HM	HM	PAINT	PAINT	8/A8.01	4/A8.01	4/A8.01		8		
			PENTHOUSE LEVEL 3												
1701	A		3'–0"x7'–0"	1–3/4"	HM	HM	PAINT	PAINT	8/A8.01	4/A8.01	4/A8.01		9		

ABBREVATIONS

(E)	EXISTING
GL	GLASS
HM	HOLLOW METAL
MT	METAL
STL	STEEL

DOOR TYPE

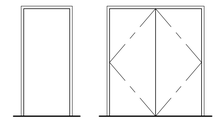

TYPE A

TYPE B

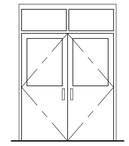

TYPE C

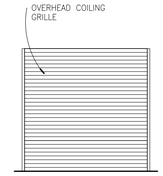

TYPE D

NOTES:

RATED DOORS, SEALS AND HARDWARE SHALL COMPLY WITH THE REQUIREMENTS OF THE 2002 COUNTY OF LOS ANGELESE BUILDING CODE.

ALL EXIT DOORS SHALL BE OPENABLE FROM THE INSIDE WITHOUT THE USE OF A KEY OR ANY SPECIAL KNOWLEDGE OR EFFORT OR PROVIDE A SIGN ON OR ADJACENT TO THE DOOR STATING: "THIS DOOR TO REMAIN UNLOCKED DURING BUSINESS HOURS."

*FIELD VERIFY ACTUAL CONFIGURATION

**SEE EXISTING FLOOR PLANS FOR RELOCATED DOOR NUMBER REFERENCE.

4' 8'
0' 2' 6' 16'

NADEL
Architects Inc.

1990 So. Bundy Dr.
Fourth Floor
Los Angeles, CA 90025

T. 310.826.2100
F. 310.826.0182

www.nadelarc.com

CONSULTANT

COUNTY OF LOS ANGELES
THE HALL OF JUSTICE
STRUCTURAL RETROFIT PHASE

REVISIONS

△	
△	
△	
△	
△	
△	

DRAWING TITLE

DOOR SCHEDULE, TYPES, AND DETAILS

SCALE :
DATE :
JOB NO :
SHEET NO.

A8.01

SCOPING DOCUMENTS 100% SUBMISSION AUGUST 2010

ALL DRAWINGS AND WRITTEN MATERIAL APPEARING HEREIN CONSTITUTE THE ORIGINAL AND UNPUBLISHED WORK OF THE ARCHITECT AND THE SAME MAY NOT BE DUPLICATED, USED OR DISCLOSED WITHOUT THE WRITTEN CONSENT OF THE ARCHITECT. COPYRIGHT: NADEL ARCHITECTS INC. ALL RIGHTS RESERVED.

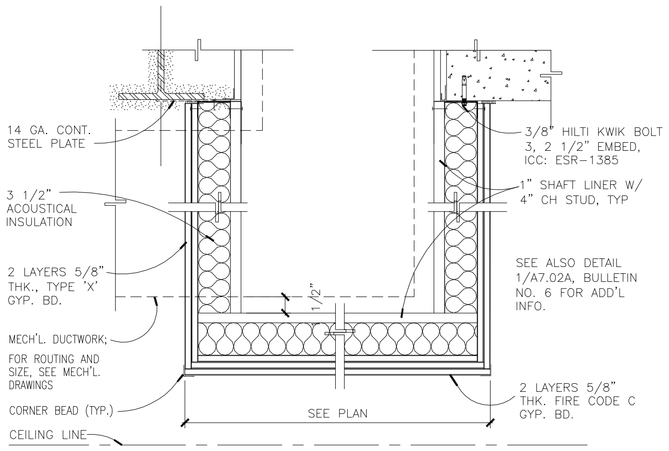

2 HOUR HORIZONTAL SHAFT | SCALE: 1 1/2"=1'-0" | 20

SCALE: 3"=1'-0" | 16

SCALE: 3"=1'-0" | 12

SCALE: 3"=1'-0" | 8

SCALE: 3"=1'-0" | 4

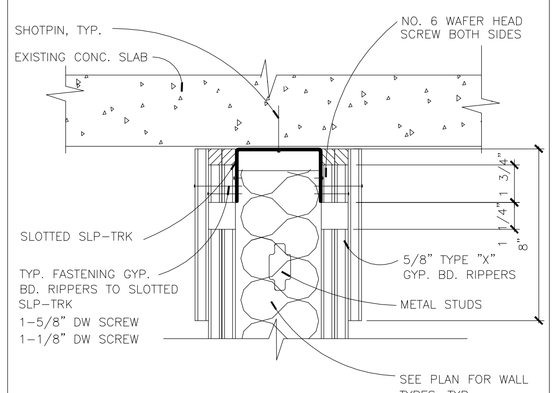

NOTE: DO NOT SCREW GYP. BD. TO SLOTTED SLIPTRACK. SCREW GYP. BD. TO STUDS ONLY.

WARNOCK HERSEY-I.T.S. REPORT NO. WHI-495-PSV-1267.

S-00000-00

HEAD OF WALL - 2 HOUR | SCALE: 3"=1'-0" | 23

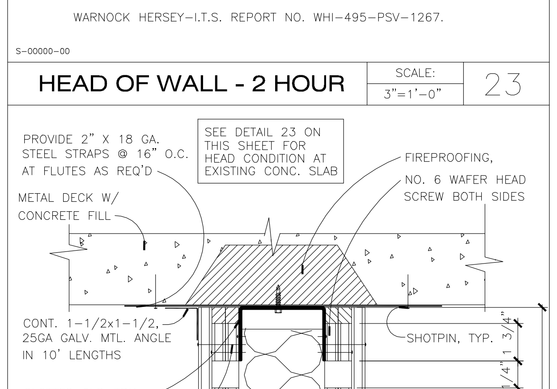

NOTE: DO NOT SCREW GYP. BD. TO SLOTTED SLIPTRACK. SCREW GYP. BD. TO STUDS ONLY.

WARNOCK HERSEY-I.T.S. REPORT NO. WHI-495-PSV-1267.

S-00000-00

HEAD OF WALL - 2 HOUR | SCALE: 3"=1'-0" | 22

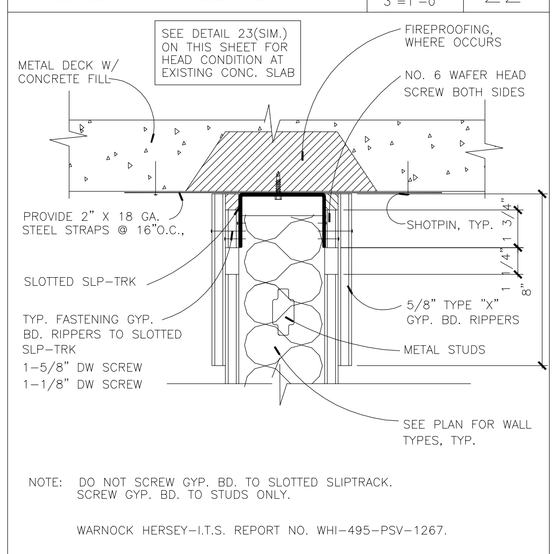

NOTE: DO NOT SCREW GYP. BD. TO SLOTTED SLIPTRACK. SCREW GYP. BD. TO STUDS ONLY.

WARNOCK HERSEY-I.T.S. REPORT NO. WHI-495-PSV-1267.

S-00000-00

HEAD OF WALL - 1 HOUR | SCALE: 3"=1'-0" | 21

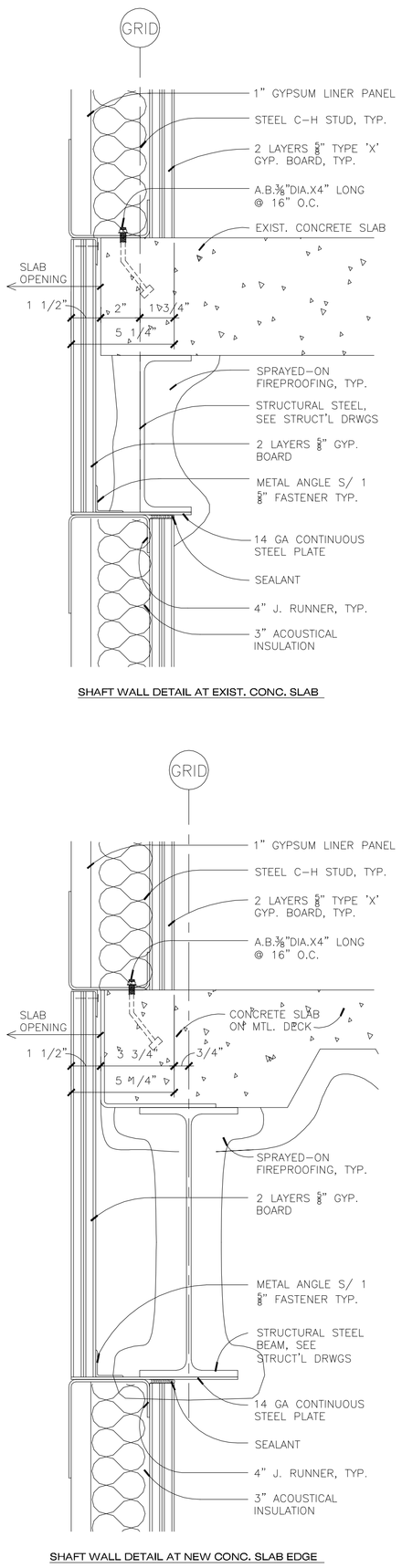

SHAFT WALL DETAIL AT EXIST. CONC. SLAB

SHAFT WALL DETAIL AT NEW CONC. SLAB EDGE

SHAFT WALL AT SLAB EDGE | SCALE: 3"=1'-0" | 17

SCALE: 3"=1'-0" | 15

SCALE: 3"=1'-0" | 11

SCALE: 3"=1'-0" | 7

2 HR SHAFT WALL - TYPE 3 | SCALE: 3"=1'-0" | 3

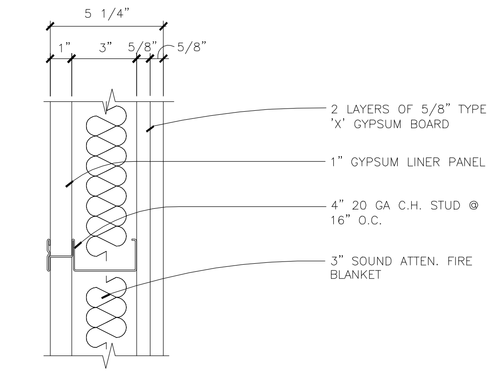

NOTES: 2 HOUR FIRE RATING PER UL DESIGN NO. 415

WALL TYPE 3 = FULL HEIGHT PARTITION TO UNDERSIDE OF STRUCTURE ABOVE. SEE DET. 17/8.03 FOR SLAB EDGE DETAILS.

SCALE: 3"=1'-0" | 14

SCALE: 3"=1'-0" | 10

SCALE: 3"=1'-0" | 6

PARTITION - TYPE 2 | SCALE: 3"=1'-0" | 2

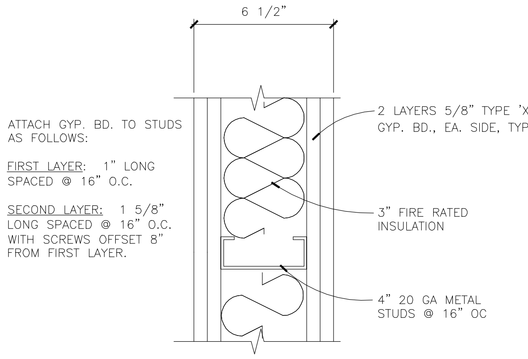

NOTES: 2 HOUR FIRE RATING, PER UL DESIGN NO. U419.

WALL TYPE 2 = FULL HEIGHT PARTITION TO UNDERSIDE OF STRUCTURE ABOVE. SEE DET. 22/8.03 FOR HEAD CONDITION.

SCALE: 3"=1'-0" | 13

SCALE: 3"=1'-0" | 9

SCALE: 3"=1'-0" | 5

PARTITION - TYPE 1 | SCALE: 3"=1'-0" | 1

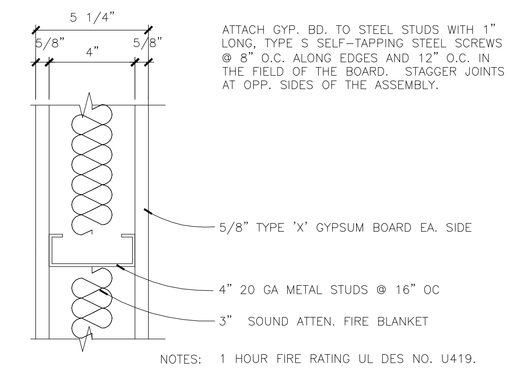

NOTES: 1 HOUR FIRE RATING UL DES NO. U419.

WALL TYPE 1 = FULL HEIGHT PARTITION TO UNDERSIDE OF STRUCTURE ABOVE. SEE DET. 21/8.03 FOR HEAD CONDITION.

NADEL
Architects Inc.

1990 So. Bundy Dr.
Fourth Floor
Los Angeles, CA 90025

T. 310.826.2100
F. 310.826.0182

www.nadelarc.com

CONSULTANT

COUNTY OF LOS ANGELES
THE HALL OF JUSTICE
STRUCTURAL RETROFIT PHASE

REVISIONS

△	
△	
△	
△	
△	
△	

DRAWING TITLE

PARTITION TYPES & DETAILS

SCOPING DOCUMENTS 100% SUBMISSION AUGUST 2010

SCALE :
DATE :
JOB NO :
SHEET NO.

A8.03

ALL DRAWINGS AND WRITTEN MATERIAL APPEARING HEREIN CONSTITUTE THE ORIGINAL AND UNPUBLISHED WORK OF THE ARCHITECT AND THE SAME MAY NOT BE DUPLICATED, USED OR DISCLOSED WITHOUT THE WRITTEN CONSENT OF THE ARCHITECT. COPYRIGHT: NADEL ARCHITECTS INC. ALL RIGHTS RESERVED.

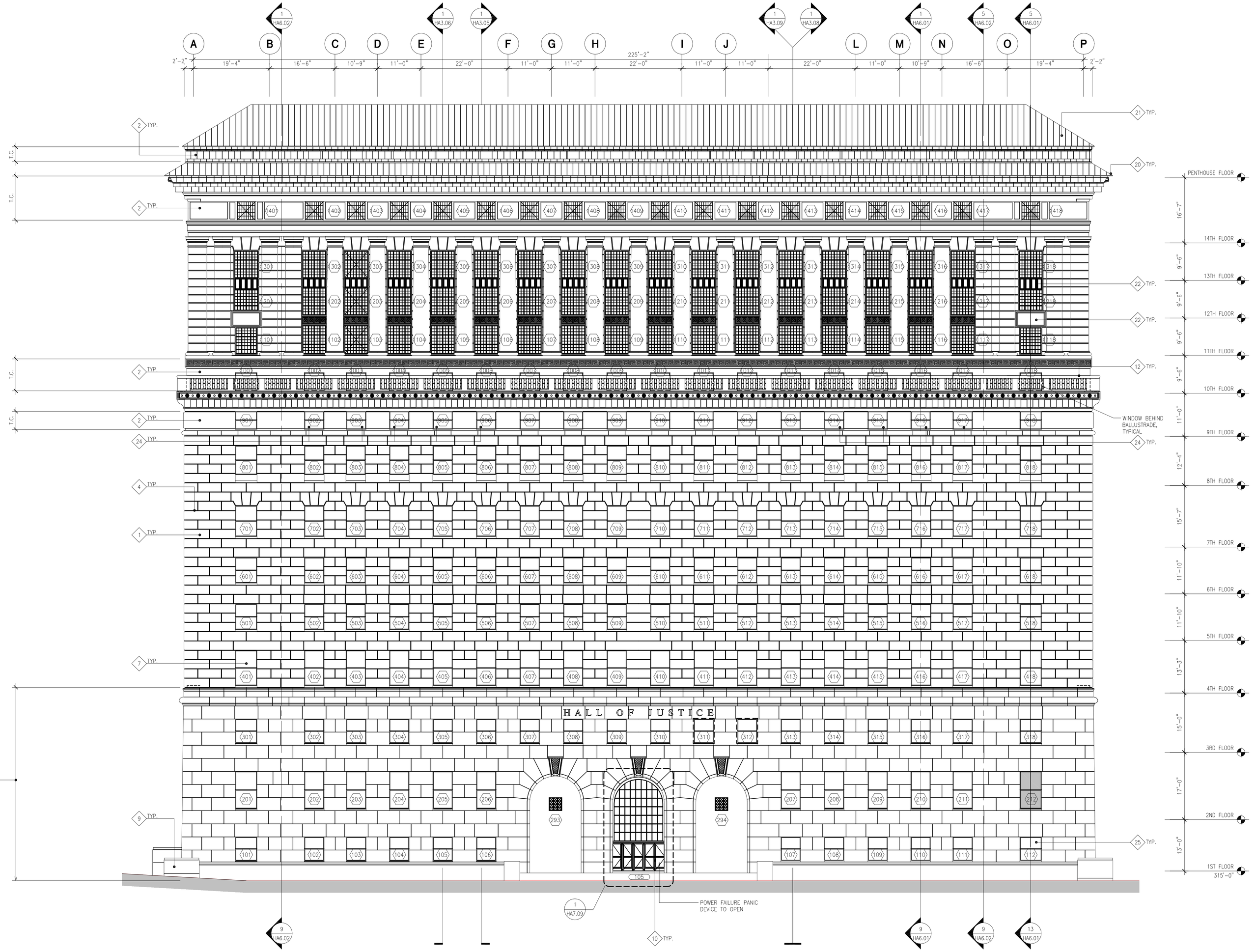

BUILDING ELEVATION EAST (SPRING STREET)

3/32"=1'-0" | 2

TYPICAL EXTERIOR RESTORATION KEYNOTES

1. CLEAN ALL EXTERIOR STONE FACING, REFER TO SPECIFICATIONS FOR CLEANING PRODUCTS AND METHODS.
2. CLEAN ALL EXTERIOR TERRA COTTA FACING WITH PROSOCO SUREKLEAN; REFER TO SPECIFICATIONS FOR CLEANING PRODUCTS AND METHODS
3. CLEAN ALL EXTERIOR GLAZED BRICK WITH PROSOCO SUREKLEAN; REFER TO SPECIFICATIONS FOR CLEANING PRODUCTS AND METHODS
4. REPOINT EXTERIOR STONE & TERRA COTTA JOINTS AS REQUIRED; ASSUME 20% OF JOINTS TO BE REPOINTED. (REFER TO SPEC. FOR REPOINTING CRITERIA)
5. REPAIR SPALLING AT TERRA COTTA WINDOW SILLS WITH SPECIFIED MORTAR & GLAZE REPAIR. (ASSUME 30% OF SILLS REQUIRE REPAIR)
6. REPLACE EXISTING DAMAGED GLAZED BRICK WITH NEW GLAZED BRICK TO MATCH
7. REHABILITATE EXISTING EXTERIOR WINDOWS. (REFER TO WINDOW SCHEDULE ON SHEET HA7.04)
8. REPLACE EXISTING NON-HISTORIC STOREFRONT DOORS WITH NEW BRONZE DOORS TO MATCH ORIGINAL HISTORIC DOORS. (4 DOORS REQUIRED)
9. RE-INSTALL DISLODGED GRANITE FACING AS REQUIRED
10. REMOVE 2 EXISTING BRONZE DOORS & REMOVE CENTER POST; RE-INSTALL EXISTING BRONZE DOORS WITH AUTOMATIC OPENING DEVICE.
11. INSTALL HELIFIX ANCHORS AT STONE, TERRA COTTA, & BRICK FACING. ANCHORS ARE TO BE TYPICALLY INSTALLED FROM THE INTERIOR. STONE & TERRA COTTA UNITS AT FLOOR SLABS, WHICH DO NOT PERMIT INTERIOR ANCHORING, SHALL BE INSTALLED FROM THE EXTERIOR; REFER TO DETAILS FOR LOCATION. ANCHOR SUBCONTRACTOR SHALL DETERMINE THE NUMBER OF ANCHORS REQUIRED PER MASONRY UNIT BASED ON 1 PIN / 1000 POUNDS OF WEIGHT; REFER TO STRUCT. TO DETERMINE NUMBER OF ANCHORS PER MASONRY UNIT. INTERIOR ANCHORS AT SHEAR WALLS TO BE INSTALLED PRIOR TO SHEAR WALL CONSTRUCTION.
12. PROVIDE STAINLESS ROD BRACING AT EXISTING TERRA COTTA BALLUSTRADE.
13. PROVIDE NEW LEDGER AT BOTTOM OF EXISTING STONE VENEER.
14. PROVIDE STEEL BENT PLATE AT STONE SILL TO ATTACH STONE ANCHORS TO THE EXTERIOR FACADE.
15. REMOVE ENTIRE WINDOW, AND REPLACE WITH NEW MECHANICAL LOUVERS; WINDOW MULLIONS TO BE SALVAGED; SALVAGED WINDOW MULLIONS AND SASH ARE TO BE RE-USED TO REPLACE MISSING WINDOW MULLIONS AND SASH AS INDICATED ON DRAWINGS. SEE WINDOW SCHEDULE AND ELEVATIONS FOR LOCATION OF MULLION REPAIR.
16. PROVIDE FIRESTOP SYSTEM AT CONCRETE FLOOR SLAB AND WINDOW GLAZING CONNECTION.
17. PROVIDE PROSOCO ANTI-GRAFFITTI COATING (SACRIFICIAL COATING SC-1) AT ALL EXTERIOR MASONRY FROM 4TH FLOOR TO GRADE.
18. REMOVE EXISTING GRAFFITTI AND PAINT WITH PROSOCO HEAVY DUTY PAINT STRIPPER 20048.
19. CLEAN EXISTING EXTERIOR BRONZE ENTRANCE FRAMES AND LIGHT COURT WINDOWS.
20. CLEAN AND REPAIR EXISTING GUTTER AS REQUIRED.
21. CLEAN EXISTING COPPER ROOF WITH MICRO ABRASIVE CLEANING SYSTEM (JOS OR EQUAL).
22. REMOVE EXISTING PAINT ON ALL METAL SPANDRELS; RE-PAINT TO MATCH HISTORICAL
23. CLEAN EXISTING EXTERIOR METAL PANEL; PRIME AND RE-PAINT TO MATCH HISTORICAL
24. REMOVE EXISTING METAL INFILL PANEL AND INSTALL CLEAR GLASS; FIELD VERIFY LOCATIONS
25. REMOVE ALL PANELS OR SCREENS ON THE EXTERIOR/INTERIOR OF HISTORICAL WINDOW; FIELD VERIFY LOCATIONS
26. REMOVE REFLECTIVE FILM ON GLASS; FIELD VERIFY LOCATIONS

- DENOTES WINDOW DE-INSTALLED IN PREVIOUS PHASE TO BE RE-INSTALLED. (REFER TO WINDOW SCHEDULE)
- TONE REPRESENTS WINDOWS WHERE EXISTING STEEL MULLION OR FRAME HAS BEEN REMOVED. REPLACE MISSING LIGHT COURT FRAMES, WHERE APPLICABLE, USING THE SALVAGED WINDOW FRAMES WHERE MECHANICAL LOUVERS ARE BEING INSTALLED. ALL EXTERIOR WINDOWS TO BE REPLACED TO MATCH HISTORICAL. (FIELD VERIFY) (REFER TO WINDOW SCHEDULE)
- DENOTES OBSCURE GLASS TO REMAIN. (REFER TO WINDOW SCHEDULE)
- DENOTES LOCATION OF PAINT STRIPPER
- DENOTES LOCATION OF WINDOWS REPLACED WITH NEW MECHANICAL LOUVERS
- DENOTES LOCATION OF EXISTING WINDOW FRAMES TO BE REHABILITATED. PROVIDE NEW CUSTOM FABRICATED WINDOW SASH AND GLAZING TO MATCH ORIGINAL HISTORIC SASH. (NOTE: WINDOWN SASHES ARE MISSING)
- DENOTES LOCATION OF FIRE ESCAPE OPENING. FABRICATE NEW STEEL FRAMED WINDOW. (REFER TO WINDOW SCHEDULE)

EXTERIOR RESTORATION KEYNOTES

1

ALL DRAWINGS AND WRITTEN MATERIAL APPEARING HEREIN CONSTITUTE THE ORIGINAL AND UNPUBLISHED WORK OF THE ARCHITECT AND THE SAME MAY NOT BE DUPLICATED, USED OR DISCLOSED WITHOUT THE WRITTEN CONSENT OF THE ARCHITECT. COPYRIGHT: NADEL ARCHITECTS INC. ALL RIGHTS RESERVED.

NADEL
Architects Inc.

1990 So. Bundy Dr.
Fourth Floor
Los Angeles, CA 90025

T. 310.826.2100
F. 310.826.0182

www.nadelarc.com

CONSULTANT

NAKADA
&
ASSOCIATES

HISTORIC PRESERVATION ARCHITECT

COUNTY OF LOS ANGELES
THE HALL OF JUSTICE
STRUCTURAL RETROFIT PHASE

REVISIONS

DRAWING TITLE

EAST ELEVATION
SPRING STREET

SCOPING DOCUMENTS
100% SUBMISSION
AUGUST 2010

SCALE : 3/32"=1'-0"
DATE :
JOB NO :
SHEET NO.

HA3.01

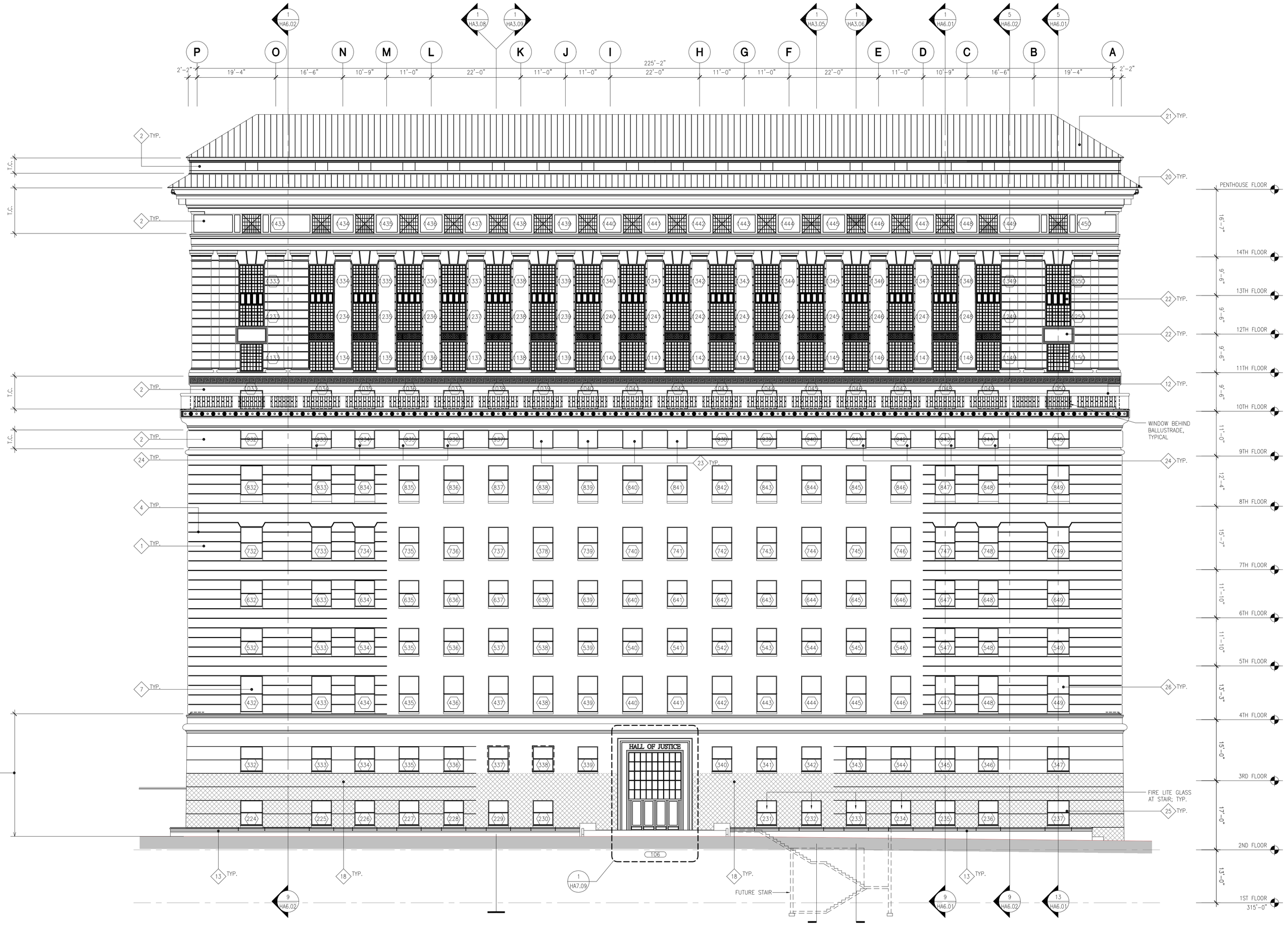

BUILDING ELEVATION WEST (BROADWAY) 3/32"=1'-0" 2

TYPICAL EXTERIOR RESTORATION KEYNOTES

1. CLEAN ALL EXTERIOR STONE FACING, REFER TO SPECIFICATIONS FOR CLEANING PRODUCTS AND METHODS.
2. CLEAN ALL EXTERIOR TERRA COTTA FACING WITH PROSOCO SUREKLEAN; REFER TO SPECIFICATIONS FOR CLEANING PRODUCTS AND METHODS
3. CLEAN ALL EXTERIOR GLAZED BRICK WITH PROSOCO SUREKLEAN; REFER TO SPECIFICATIONS FOR CLEANING PRODUCTS AND METHODS
4. REPOINT EXTERIOR STONE & TERRA COTTA JOINTS AS REQUIRED; ASSUME 20% OF JOINTS TO BE REPOINTED. (REFER TO SPEC. FOR REPOINTING CRITERIA)
5. REPAIR SPALLING AT TERRA COTTA WINDOW SILLS WITH SPECIFIED MORTAR & GLAZE REPAIR. (ASSUME 30% OF SILLS REQUIRE REPAIR)
6. REPLACE EXISTING DAMAGED GLAZED BRICK WITH NEW GLAZED BRICK TO MATCH
7. REHABILITATE EXISTING EXTERIOR WINDOWS. (REFER TO WINDOW SCHEDULE ON SHEET HA7.04)
8. REPLACE EXISTING NON-HISTORIC STOREFRONT DOORS WITH NEW BRONZE DOORS TO MATCH ORIGINAL HISTORIC DOORS. (4 DOORS REQUIRED)
9. RE-INSTALL DISLODGED GRANITE FACING AS REQUIRED
10. REMOVE 2 EXISTING BRONZE DOORS & REMOVE CENTER POST; RE-INSTALL EXISTING BRONZE DOORS WITH AUTOMATIC OPENING DEVICE.
11. INSTALL HELIFIX ANCHORS AT STONE, TERRA COTTA, & BRICK FACING. ANCHORS ARE TO BE TYPICALLY INSTALLED FROM THE INTERIOR. STONE & TERRA COTTA UNITS AT FLOOR SLABS, WHICH DO NOT PERMIT INTERIOR ANCHORING, SHALL BE INSTALLED FROM THE EXTERIOR; REFER TO DETAILS FOR LOCATION. ANCHOR SUBCONTRACTOR SHALL DETERMINE THE NUMBER OF ANCHORS REQUIRED PER MASONRY UNIT BASED ON 1 PIN / 1000 POUNDS OF WEIGHT; REFER TO STRUCT. TO DETERMINE NUMBER OF ANCHORS PER MASONRY UNIT. INTERIOR ANCHORS AT SHEAR WALLS TO BE INSTALLED PRIOR TO SHEAR WALL CONSTRUCTION.
12. PROVIDE STAINLESS ROD BRACING AT EXISTING TERRA COTTA BALLUSTRADE.
13. PROVIDE NEW LEDGER AT BOTTOM OF EXISTING STONE VENEER.
14. PROVIDE STEEL BENT PLATE AT STONE SILL TO ATTACH STONE ANCHORS TO THE EXTERIOR FACADE.
15. REMOVE ENTIRE WINDOW, AND REPLACE WITH NEW MECHANICAL LOUVERS; WINDOW MULLIONS TO BE SALVAGED; SALVAGED WINDOW MULLIONS AND SASH ARE TO BE RE-USED TO REPLACE MISSING WINDOW MULLIONS AND SASH AS INDICATED ON DRAWINGS. SEE WINDOW SCHEDULE AND ELEVATIONS FOR LOCATION OF MULLION REPAIR.
16. PROVIDE FIRESTOP SYSTEM AT CONCRETE FLOOR SLAB AND WINDOW GLAZING CONNECTION.
17. PROVIDE PROSOCO ANTI-GRAFFITI COATING (SACRIFICIAL COATING SC-1) AT ALL EXTERIOR MASONRY FROM 4TH FLOOR TO GRADE.
18. REMOVE EXISTING GRAFFITI AND PAINT WITH PROSOCO HEAVY DUTY PAINT STRIPPER 20048.
19. CLEAN EXISTING EXTERIOR BRONZE ENTRANCE FRAMES AND LIGHT COURT WINDOWS.
20. CLEAN AND REPAIR EXISTING GUTTER AS REQUIRED.
21. CLEAN EXISTING COPPER ROOF WITH MICRO ABRASIVE CLEANING SYSTEM (JOS OR EQUAL).
22. REMOVE EXISTING PAINT ON ALL METAL SPANDRELS; RE-PAINT TO MATCH HISTORICAL
23. CLEAN EXISTING EXTERIOR METAL PANEL; PRIME AND RE-PAINT TO MATCH HISTORICAL
24. REMOVE EXISTING METAL INFILL PANEL AND INSTALL CLEAR GLASS; FIELD VERIFY LOCATIONS
25. REMOVE ALL PANELS OR SCREENS ON THE EXTERIOR/INTERIOR OF HISTORICAL WINDOW; FIELD VERIFY LOCATIONS
26. REMOVE REFLECTIVE FILM ON GLASS; FIELD VERIFY LOCATIONS

- DENOTES WINDOW DE-INSTALLED IN PREVIOUS PHASE TO BE RE-INSTALLED. (REFER TO WINDOW SCHEDULE)
- TONE REPRESENTS WINDOWS WHERE EXISTING STEEL MULLION OR FRAME HAS BEEN REMOVED. REPLACE MISSING LIGHT COURT FRAMES, WHERE APPLICABLE, USING THE SALVAGED WINDOW FRAMES WHERE MECHANICAL LOUVERS ARE BEING INSTALLED. ALL EXTERIOR WINDOWS TO BE REPLACED TO MATCH HISTORICAL. (FIELD VERIFY) (REFER TO WINDOW SCHEDULE)
- DENOTES OBSCURE GLASS TO REMAIN. (REFER TO WINDOW SCHEDULE)
- DENOTES LOCATION OF PAINT STRIPPER
- DENOTES LOCATION OF WINDOWS REPLACED WITH NEW MECHANICAL LOUVERS
- DENOTES LOCATION OF EXISTING WINDOW FRAMES TO BE REHABILITATED. PROVIDE NEW CUSTOM FABRICATED WINDOW SASH AND GLAZING TO MATCH ORIGINAL HISTORIC SASH. (NOTE: WINDOWN SASHES ARE MISSING)
- DENOTES LOCATION OF FIRE ESCAPE OPENING. FABRICATE NEW STEEL FRAMED WINDOW. (REFER TO WINDOW SCHEDULE)

EXTERIOR RESTORATION KEYNOTES 1

NADEL
Architects Inc.

1990 So. Bundy Dr.
Fourth Floor
Los Angeles, CA 90025

T. 310.826.2100
F. 310.826.0182

www.nadelarc.com

CONSULTANT

NAKADA & ASSOCIATES

HISTORIC PRESERVATION ARCHITECT

COUNTY OF LOS ANGELES
THE HALL OF JUSTICE
STRUCTURAL RETROFIT PHASE

REVISIONS

DRAWING TITLE

WEST ELEVATION
BROADWAY

SCALE : 3/32"=1'-0"
DATE :
JOB NO :
SHEET NO.

HA3.02

AUGUST 2010
100% SUBMISSION
SCOPING DOCUMENTS

ALL DRAWINGS AND WRITTEN MATERIAL APPEARING HEREIN CONSTITUTE THE ORIGINAL AND UNPUBLISHED WORK OF THE ARCHITECT AND THE SAME MAY NOT BE DUPLICATED, USED OR DISCLOSED WITHOUT THE WRITTEN CONSENT OF THE ARCHITECT. COPYRIGHT: NADEL ARCHITECTS INC. ALL RIGHTS RESERVED.

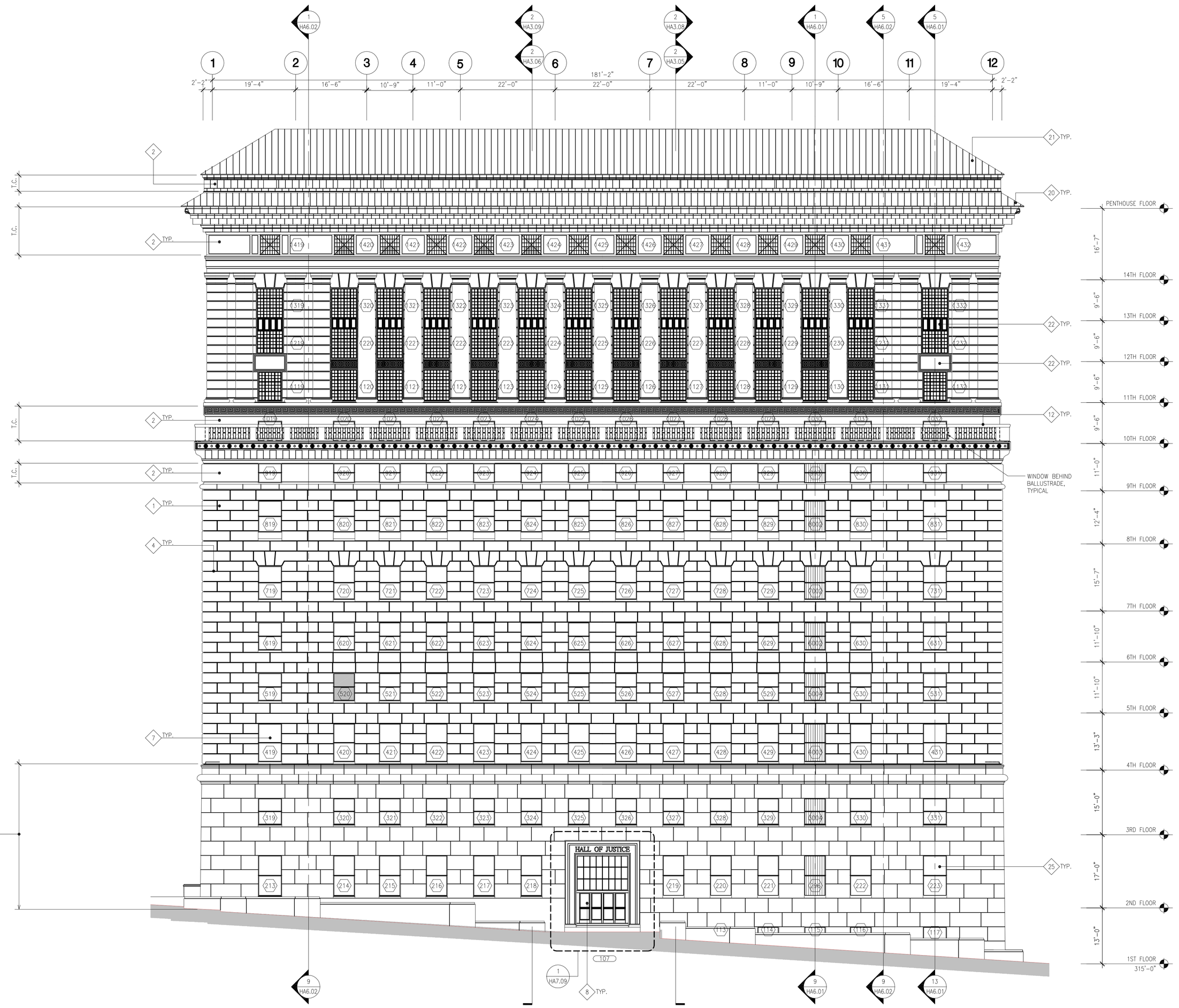

BUILDING ELEVATION SOUTH (TEMPLE STREET) 3/32"=1'-0" 2

TYPICAL EXTERIOR RESTORATION KEYNOTES

1. CLEAN ALL EXTERIOR STONE FACING, REFER TO SPECIFICATIONS FOR CLEANING PRODUCTS AND METHODS.
2. CLEAN ALL EXTERIOR TERRA COTTA FACING WITH PROSOCO SUREKLEAN; REFER TO SPECIFICATIONS FOR CLEANING PRODUCTS AND METHODS
3. CLEAN ALL EXTERIOR GLAZED BRICK WITH PROSOCO SUREKLEAN; REFER TO SPECIFICATIONS FOR CLEANING PRODUCTS AND METHODS
4. REPOINT EXTERIOR STONE & TERRA COTTA JOINTS AS REQUIRED; ASSUME 20% OF JOINTS TO BE REPOINTED. (REFER TO SPEC. FOR REPOINTING CRITERIA)
5. REPAIR SPALLING AT TERRA COTTA WINDOW SILLS WITH SPECIFIED MORTAR & GLAZE REPAIR. (ASSUME 30% OF SILLS REQUIRE REPAIR)
6. REPLACE EXISTING DAMAGED GLAZED BRICK WITH NEW GLAZED BRICK TO MATCH
7. REHABILITATE EXISTING EXTERIOR WINDOWS. (REFER TO WINDOW SCHEDULE ON SHEET HA7.04)
8. REPLACE EXISTING NON-HISTORIC STOREFRONT DOORS WITH NEW BRONZE DOORS TO MATCH ORIGINAL HISTORIC DOORS. (4 DOORS REQUIRED)
9. RE-INSTALL DISLODGED GRANITE FACING AS REQUIRED
10. REMOVE 2 EXISTING BRONZE DOORS & REMOVE CENTER POST; RE-INSTALL EXISTING BRONZE DOORS WITH AUTOMATIC OPENING DEVICE.
11. INSTALL HELIFIX ANCHORS AT STONE, TERRA COTTA, & BRICK FACING. ANCHORS ARE TO BE TYPICALLY INSTALLED FROM THE INTERIOR. STONE & TERRA COTTA UNITS AT FLOOR SLABS, WHICH DO NOT PERMIT INTERIOR ANCHORING, SHALL BE INSTALLED FROM THE EXTERIOR; REFER TO DETAILS FOR LOCATION. ANCHOR SUBCONTRACTOR SHALL DETERMINE THE NUMBER OF ANCHORS REQUIRED PER MASONRY UNIT BASED ON 1 PIN / 1000 POUNDS OF WEIGHT; REFER TO STRUCT. TO DETERMINE NUMBER OF ANCHORS PER MASONRY UNIT. INTERIOR ANCHORS AT SHEAR WALLS TO BE INSTALLED PRIOR TO SHEAR WALL CONSTRUCTION.
12. PROVIDE STAINLESS ROD BRACING AT EXISTING TERRA COTTA BALLUSTRADE.
13. PROVIDE NEW LEDGER AT BOTTOM OF EXISTING STONE VENEER.
14. PROVIDE STEEL BENT PLATE AT STONE SILL TO ATTACH STONE ANCHORS TO THE EXTERIOR FACADE.
15. REMOVE ENTIRE WINDOW, AND REPLACE WITH NEW MECHANICAL LOUVERS; WINDOW MULLIONS TO BE SALVAGED; SALVAGED WINDOW MULLIONS AND SASH ARE TO BE RE-USED TO REPLACE MISSING WINDOW MULLIONS AND SASH AS INDICATED ON DRAWINGS. SEE WINDOW SCHEDULE AND ELEVATIONS FOR LOCATION OF MULLION REPAIR.
16. PROVIDE FIRESTOP SYSTEM AT CONCRETE FLOOR SLAB AND WINDOW GLAZING CONNECTION.
17. PROVIDE PROSOCO ANTI-GRAFFITI COATING (SACRIFICIAL COATING SC-1) AT ALL EXTERIOR MASONRY FROM 4TH FLOOR TO GRADE.
18. REMOVE EXISTING GRAFFITI AND PAINT WITH PROSOCO HEAVY DUTY PAINT STRIPPER 20048.
19. CLEAN EXISTING EXTERIOR BRONZE ENTRANCE FRAMES AND LIGHT COURT WINDOWS.
20. CLEAN AND REPAIR EXISTING GUTTER AS REQUIRED.
21. CLEAN EXISTING COPPER ROOF WITH MICRO ABRASIVE CLEANING SYSTEM (JOS OR EQUAL).
22. REMOVE EXISTING PAINT ON ALL METAL SPANDRELS; RE-PAINT TO MATCH HISTORICAL
23. CLEAN EXISTING EXTERIOR METAL PANEL; PRIME AND RE-PAINT TO MATCH HISTORICAL
24. REMOVE EXISTING METAL INFILL PANEL AND INSTALL CLEAR GLASS; FIELD VERIFY LOCATIONS
25. REMOVE ALL PANELS OR SCREENS ON THE EXTERIOR/INTERIOR OF HISTORICAL WINDOW; FIELD VERIFY LOCATIONS
26. REMOVE REFLECTIVE FILM ON GLASS; FIELD VERIFY LOCATIONS

- DENOTES WINDOW DE-INSTALLED IN PREVIOUS PHASE TO BE RE-INSTALLED. (REFER TO WINDOW SCHEDULE)
- TONE REPRESENTS WINDOWS WHERE EXISTING STEEL MULLION OR FRAME HAS BEEN REMOVED. REPLACE MISSING LIGHT COURT FRAMES, WHERE APPLICABLE, USING THE SALVAGED WINDOW FRAMES WHERE MECHANICAL LOUVERS ARE BEING INSTALLED. ALL EXTERIOR WINDOWS TO BE REPLACED TO MATCH HISTORICAL. (FIELD VERIFY) (REFER TO WINDOW SCHEDULE)
- DENOTES OBSCURE GLASS TO REMAIN. (REFER TO WINDOW SCHEDULE)
- DENOTES LOCATION OF PAINT STRIPPER
- DENOTES LOCATION OF WINDOWS REPLACED WITH NEW MECHANICAL LOUVERS
- DENOTES LOCATION OF EXISTING WINDOW FRAMES TO BE REHABILITATED. PROVIDE NEW CUSTOM FABRICATED WINDOW SASH AND GLAZING TO MATCH ORIGINAL HISTORIC SASH. (NOTE: WINDOWN SASHES ARE MISSING)
- DENOTES LOCATION OF FIRE ESCAPE OPENING. FABRICATE NEW STEEL FRAMED WINDOW. (REFER TO WINDOW SCHEDULE)

EXTERIOR RESTORATION KEYNOTES 1

NADEL
Architects Inc.

1990 So. Bundy Dr.
Fourth Floor
Los Angeles, CA 90025

T. 310.826.2100
F. 310.826.0182

www.nadelarc.com

CONSULTANT

NAKADA & ASSOCIATES

HISTORIC PRESERVATION ARCHITECT

COUNTY OF LOS ANGELES
THE HALL OF JUSTICE
STRUCTURAL RETROFIT PHASE

REVISIONS

DRAWING TITLE

SOUTH ELEVATION
TEMPLE STREET

SCALE : 3/32"=1'-0"
DATE :
JOB NO :
SHEET NO.

HA3.03

100% SUBMISSION AUGUST 2010
SCOPING DOCUMENTS

ALL DRAWINGS AND WRITTEN MATERIAL APPEARING HEREIN CONSTITUTE THE ORIGINAL AND UNPUBLISHED WORK OF THE ARCHITECT AND THE SAME MAY NOT BE DUPLICATED, USED OR DISCLOSED WITHOUT THE WRITTEN CONSENT OF THE ARCHITECT. COPYRIGHT: NADEL ARCHITECTS INC. ALL RIGHTS RESERVED.

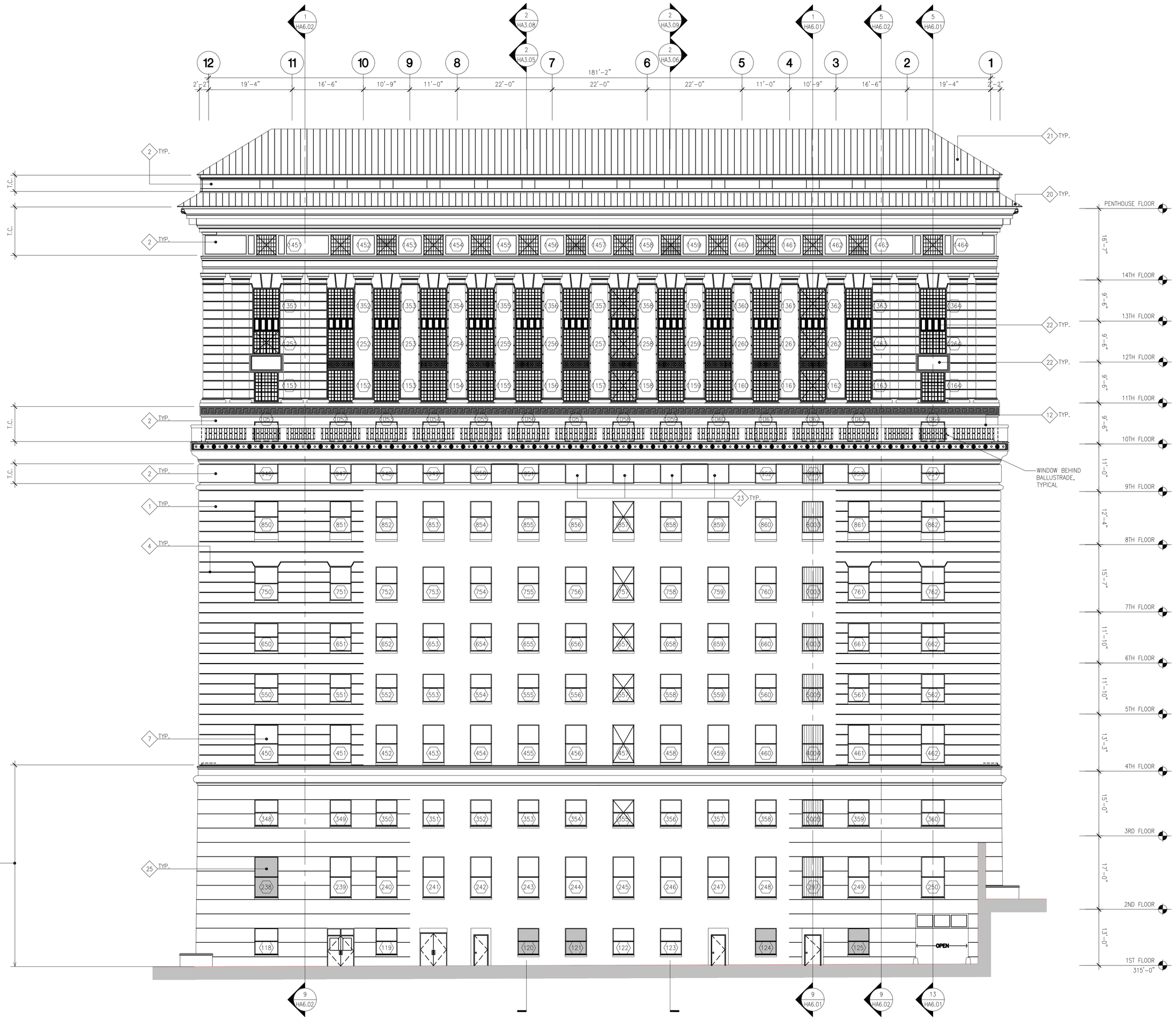

BUILDING ELEVATION (NORTH (ALISO STREET)

3/32"=1'-0"

2

TYPICAL EXTERIOR RESTORATION KEYNOTES

1. CLEAN ALL EXTERIOR STONE FACING; REFER TO SPECIFICATIONS FOR CLEANING PRODUCTS AND METHODS.
2. CLEAN ALL EXTERIOR TERRA COTTA FACING WITH PROSOCO SUREKLEAN; REFER TO SPECIFICATIONS FOR CLEANING PRODUCTS AND METHODS
3. CLEAN ALL EXTERIOR GLAZED BRICK WITH PROSOCO SUREKLEAN; REFER TO SPECIFICATIONS FOR CLEANING PRODUCTS AND METHODS
4. REPOINT EXTERIOR STONE & TERRA COTTA JOINTS AS REQUIRED; ASSUME 20% OF JOINTS TO BE REPOINTED. (REFER TO SPEC. FOR REPOINTING CRITERIA)
5. REPAIR SPALLING AT TERRA COTTA WINDOW SILLS WITH SPECIFIED MORTAR & GLAZE REPAIR. (ASSUME 30% OF SILLS REQUIRE REPAIR)
6. REPLACE EXISTING DAMAGED GLAZED BRICK WITH NEW GLAZED BRICK TO MATCH
7. REHABILITATE EXISTING EXTERIOR WINDOWS. (REFER TO WINDOW SCHEDULE ON SHEET HA7.04)
8. REPLACE EXISTING NON-HISTORIC STOREFRONT DOORS WITH NEW BRONZE DOORS TO MATCH ORIGINAL HISTORIC DOORS. (4 DOORS REQUIRED)
9. RE-INSTALL DISLODGED GRANITE FACING AS REQUIRED
10. REMOVE 2 EXISTING BRONZE DOORS & REMOVE CENTER POST; RE-INSTALL EXISTING BRONZE DOORS WITH AUTOMATIC OPENING DEVICE.
11. INSTALL HELIFIX ANCHORS AT STONE, TERRA COTTA, & BRICK FACING. ANCHORS ARE TO BE TYPICALLY INSTALLED FROM THE INTERIOR. STONE & TERRA COTTA UNITS AT FLOOR SLABS, WHICH DO NOT PERMIT INTERIOR ANCHORING, SHALL BE INSTALLED FROM THE EXTERIOR; REFER TO DETAILS FOR LOCATION. ANCHOR SUBCONTRACTOR SHALL DETERMINE THE NUMBER OF ANCHORS REQUIRED PER MASONRY UNIT BASED ON 1 PIN / 1000 POUNDS OF WEIGHT; REFER TO STRUCT. TO DETERMINE NUMBER OF ANCHORS PER MASONRY UNIT. INTERIOR ANCHORS AT SHEAR WALLS TO BE INSTALLED PRIOR TO SHEAR WALL CONSTRUCTION.
12. PROVIDE STAINLESS ROD BRACING AT EXISTING TERRA COTTA BALLUSTRADE.
13. PROVIDE NEW LEDGER AT BOTTOM OF EXISTING STONE VENEER.
14. PROVIDE STEEL BENT PLATE AT STONE SILL TO ATTACH STONE ANCHORS TO THE EXTERIOR FACADE.
15. REMOVE ENTIRE WINDOW, AND REPLACE WITH NEW MECHANICAL LOUVERS; WINDOW MULLIONS TO BE SALVAGED; SALVAGED WINDOW MULLIONS AND SASH ARE TO BE RE-USED TO REPLACE MISSING WINDOW MULLIONS AND SASH AS INDICATED ON DRAWINGS. SEE WINDOW SCHEDULE AND ELEVATIONS FOR LOCATION OF MULLION REPAIR.
16. PROVIDE FIRESTOP SYSTEM AT CONCRETE FLOOR SLAB AND WINDOW GLAZING CONNECTION.
17. PROVIDE PROSOCO ANTI-GRAFFITI COATING (SACRIFICIAL COATING SC-1) AT ALL EXTERIOR MASONRY FROM 4TH FLOOR TO GRADE.
18. REMOVE EXISTING GRAFFITI AND PAINT WITH PROSOCO HEAVY DUTY PAINT STRIPPER 20048.
19. CLEAN EXISTING EXTERIOR BRONZE ENTRANCE FRAMES AND LIGHT COURT WINDOWS.
20. CLEAN AND REPAIR EXISTING GUTTER AS REQUIRED.
21. CLEAN EXISTING COPPER ROOF WITH MICRO ABRASIVE CLEANING SYSTEM (JOS OR EQUAL).
22. REMOVE EXISTING PAINT ON ALL METAL SPANDRELS; RE-PAINT TO MATCH HISTORICAL
23. CLEAN EXISTING EXTERIOR METAL PANEL; PRIME AND RE-PAINT TO MATCH HISTORICAL
24. REMOVE EXISTING METAL INFILL PANEL AND INSTALL CLEAR GLASS; FIELD VERIFY LOCATIONS
25. REMOVE ALL PANELS OR SCREENS ON THE EXTERIOR/INTERIOR OF HISTORICAL WINDOW; FIELD VERIFY LOCATIONS
26. REMOVE REFLECTIVE FILM ON GLASS; FIELD VERIFY LOCATIONS

- DENOTES WINDOW DE-INSTALLED IN PREVIOUS PHASE TO BE RE-INSTALLED. (REFER TO WINDOW SCHEDULE)
- TONE REPRESENTS WINDOWS WHERE EXISTING STEEL MULLION OR FRAME HAS BEEN REMOVED. REPLACE MISSING LIGHT COURT FRAMES, WHERE APPLICABLE, USING THE SALVAGED WINDOW FRAMES WHERE MECHANICAL LOUVERS ARE BEING INSTALLED. ALL EXTERIOR WINDOWS TO BE REPLACED TO MATCH HISTORICAL. (FIELD VERIFY) (REFER TO WINDOW SCHEDULE)
- DENOTES OBSCURE GLASS TO REMAIN. (REFER TO WINDOW SCHEDULE)
- DENOTES LOCATION OF PAINT STRIPPER
- DENOTES LOCATION OF WINDOWS REPLACED WITH NEW MECHANICAL LOUVERS
- DENOTES LOCATION OF EXISTING WINDOW FRAMES TO BE REHABILITATED. PROVIDE NEW CUSTOM FABRICATED WINDOW SASH AND GLAZING TO MATCH ORIGINAL HISTORIC SASH. (NOTE: WINDOWN SASHES ARE MISSING)
- DENOTES LOCATION OF FIRE ESCAPE OPENING. FABRICATE NEW STEEL FRAMED WINDOW. (REFER TO WINDOW SCHEDULE)

EXTERIOR RESTORATION KEYNOTES

1

NADEL
Architects Inc.

1990 So. Bundy Dr.
Fourth Floor
Los Angeles, CA 90025

T. 310.826.2100
F. 310.826.0182

www.nadelarc.com

CONSULTANT

NAKADA + ASSOCIATES

HISTORIC PRESERVATION ARCHITECT

COUNTY OF LOS ANGELES
THE HALL OF JUSTICE
STRUCTURAL RETROFIT PHASE

REVISIONS

DRAWING TITLE

NORTH ELEVATION
ALISO STREET

SCALE : 3/32"=1'-0"
DATE :
JOB NO :
SHEET NO.

HA3.04

AUGUST 2010
100% SUBMISSION
SCOPING DOCUMENTS

ALL DRAWINGS AND WRITTEN MATERIAL APPEARING HEREIN CONSTITUTE THE ORIGINAL AND UNPUBLISHED WORK OF THE ARCHITECT AND THE SAME MAY NOT BE DUPLICATED, USED OR DISCLOSED WITHOUT THE WRITTEN CONSENT OF THE ARCHITECT. COPYRIGHT: NADEL ARCHITECTS INC. ALL RIGHTS RESERVED.

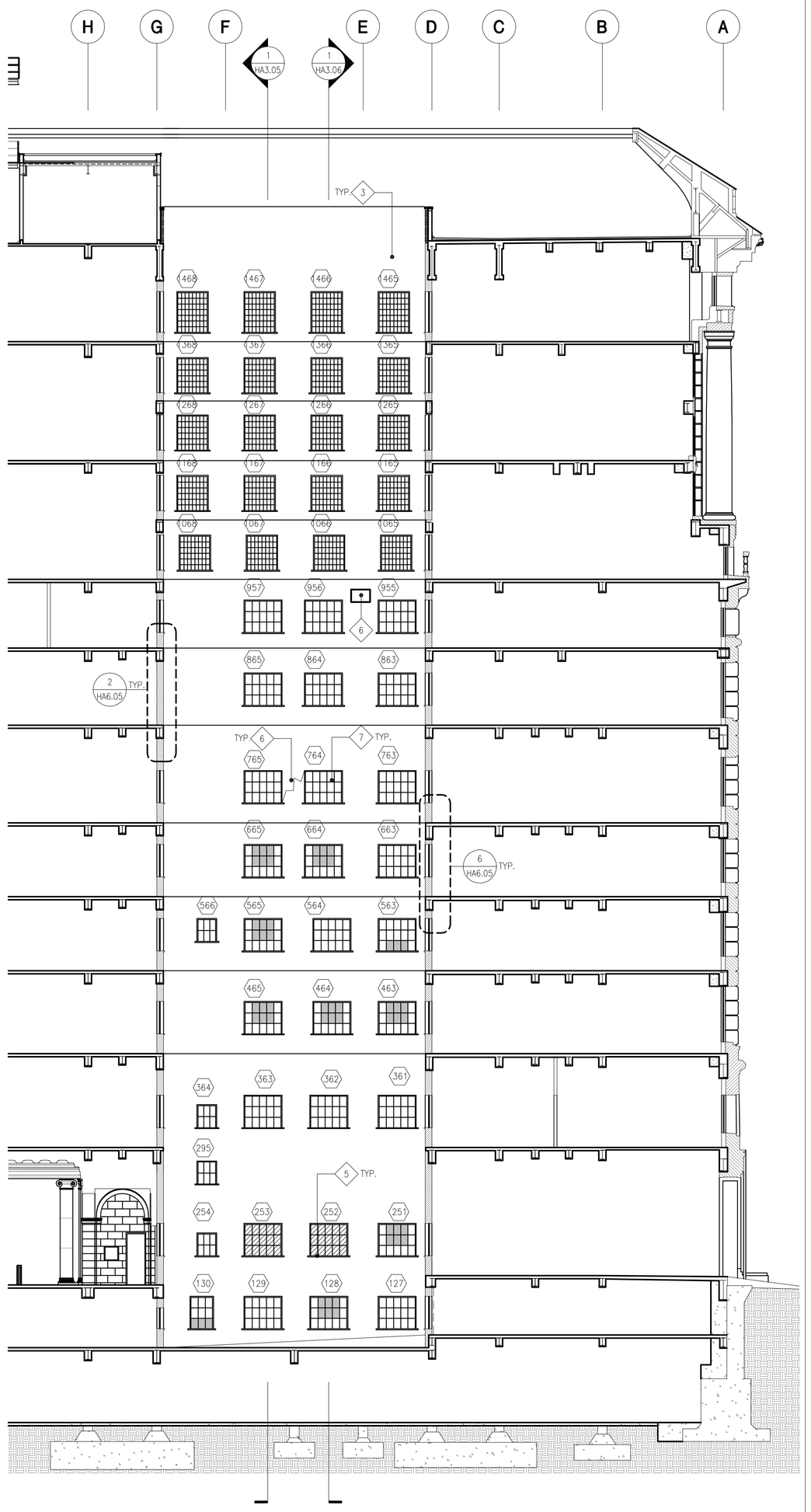

NOTE: REFER TO ELEVATION SHEET HA3.01 FOR TYPICAL EXTERIOR RESTORATION KEYNOTES

LIGHT COURT 1 (EAST ELEVATION) | 3/32"=1'-0" | 2

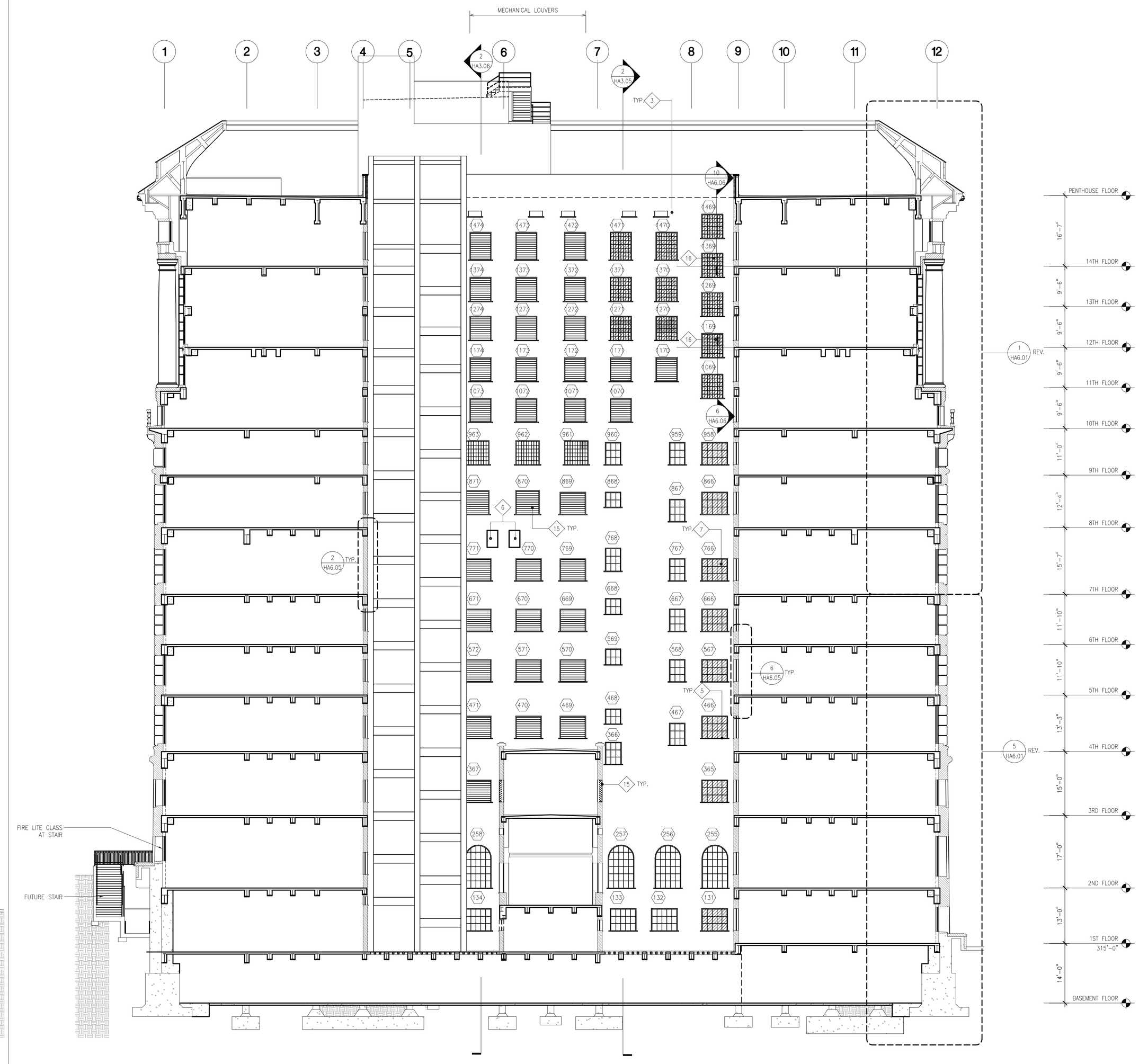

NOTE: REFER TO ELEVATION SHEET HA3.01 FOR TYPICAL EXTERIOR RESTORATION KEYNOTES

LIGHT COURT 1 (NORTH ELEVATION) | 3/32"=1'-0" | 1

NADEL
Architects Inc.

1990 So. Bundy Dr.
Fourth Floor
Los Angeles, CA 90025

T. 310.826.2100
F. 310.826.0182

www.nadelarc.com

CONSULTANT

NAKADA & ASSOCIATES

HISTORIC PRESERVATION ARCHITECT

COUNTY OF LOS ANGELES
THE HALL OF JUSTICE
STRUCTURAL RETROFIT PHASE

REVISIONS

DRAWING TITLE

LIGHT COURT 1
NORTH & EAST ELEVATIONS

SCALE : 3/32"=1'-0"
DATE :
JOB NO :
SHEET NO.

HA3.05

SCOPING DOCUMENTS 100% SUBMISSION AUGUST 2010

ALL DRAWINGS AND WRITTEN MATERIAL APPEARING HEREIN CONSTITUTE THE ORIGINAL AND UNPUBLISHED WORK OF THE ARCHITECT AND THE SAME MAY NOT BE DUPLICATED, USED OR DISCLOSED WITHOUT THE WRITTEN CONSENT OF THE ARCHITECT. COPYRIGHT: NADEL ARCHITECTS INC. ALL RIGHTS RESERVED.

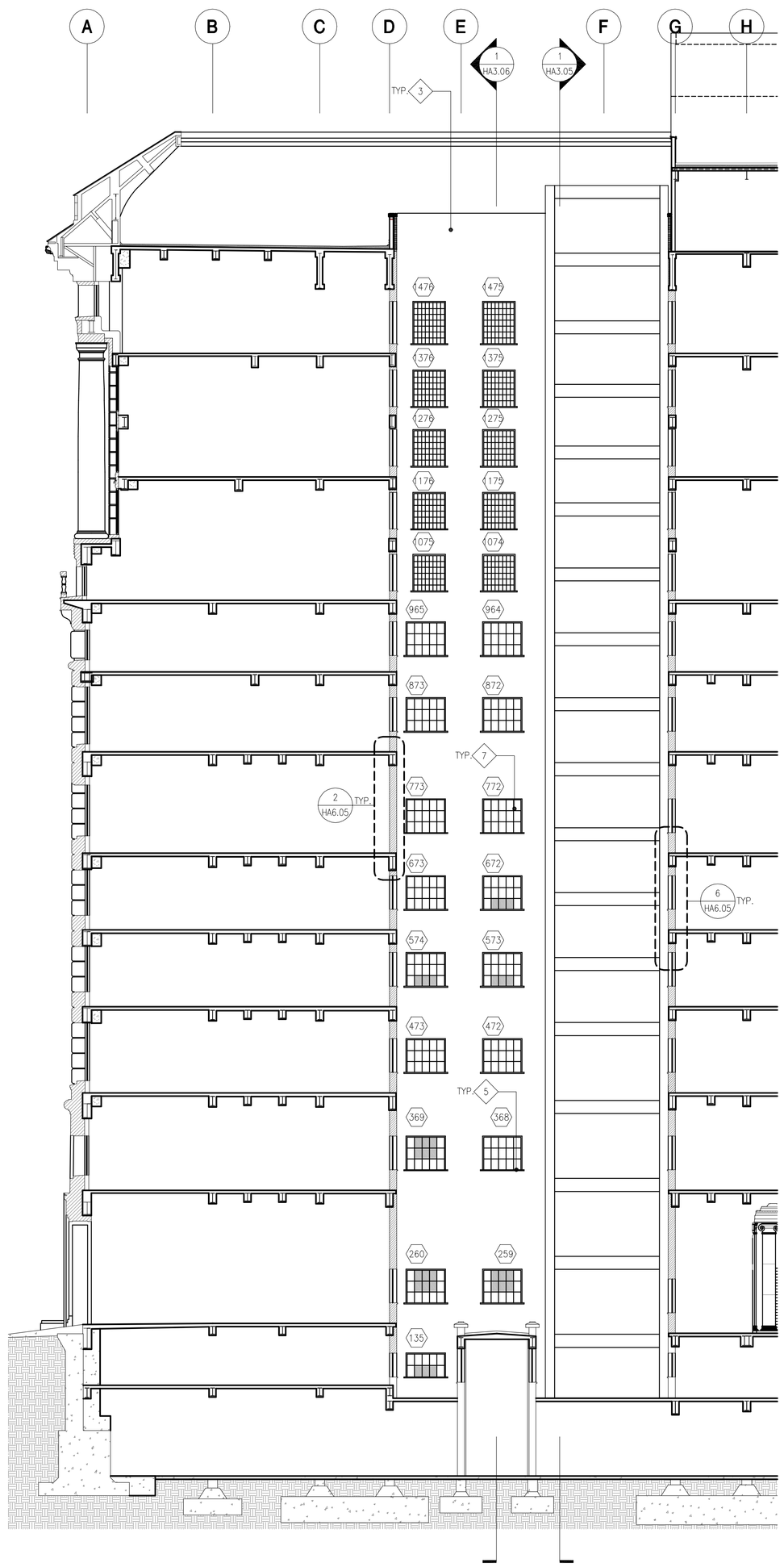

NOTE: REFER TO ELEVATION SHEET HA3.01 FOR TYPICAL EXTERIOR RESTORATION KEYNOTES

LIGHT COURT 1 (WEST ELEVATION) 3/32"=1'-0" 2

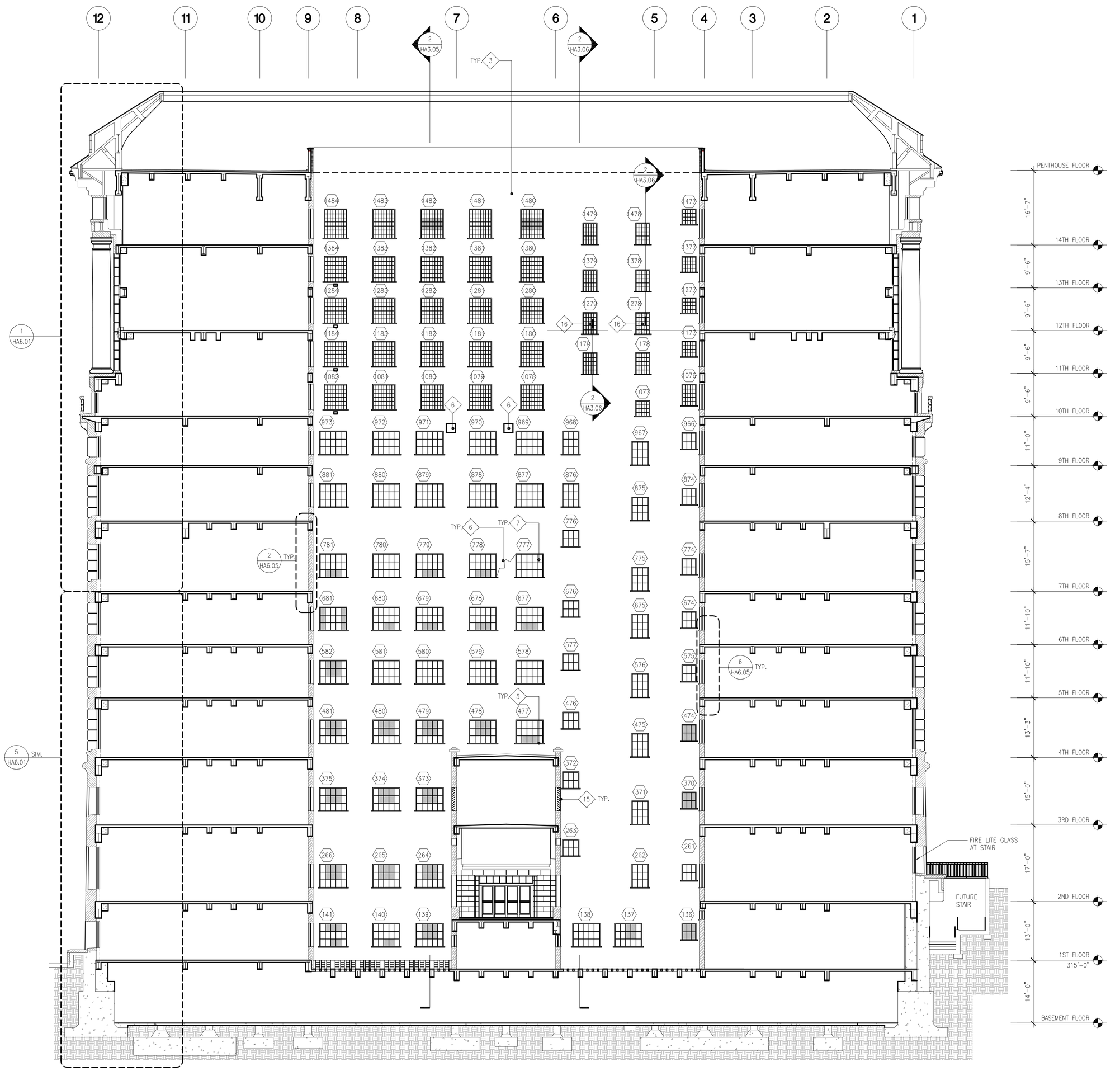

NOTE: REFER TO ELEVATION SHEET HA3.01 FOR TYPICAL EXTERIOR RESTORATION KEYNOTES

LIGHT COURT 1 (SOUTH ELEVATION) 3/32"=1'-0" 1

NADEL
Architects Inc.

1990 So. Bundy Dr.
Fourth Floor
Los Angeles, CA 90025

T. 310.826.2100
F. 310.826.0182

www.nadelarc.com

CONSULTANT

NAKADA & ASSOCIATES

HISTORIC PRESERVATION ARCHITECT

COUNTY OF LOS ANGELES
THE HALL OF JUSTICE
STRUCTURAL RETROFIT PHASE

REVISIONS

DRAWING TITLE

LIGHT COURT 1
SOUTH & WEST ELEVATIONS

SCALE : 3/32"=1'-0"
DATE :
JOB NO :
SHEET NO.

HA3.06

SCOPING DOCUMENTS 100% SUBMISSION AUGUST 2010

ALL DRAWINGS AND WRITTEN MATERIAL APPEARING HEREIN CONSTITUTE THE ORIGINAL AND UNPUBLISHED WORK OF THE ARCHITECT AND THE SAME MAY NOT BE DUPLICATED, USED OR DISCLOSED WITHOUT THE WRITTEN CONSENT OF THE ARCHITECT. COPYRIGHT: NADEL ARCHITECTS INC. ALL RIGHTS RESERVED.

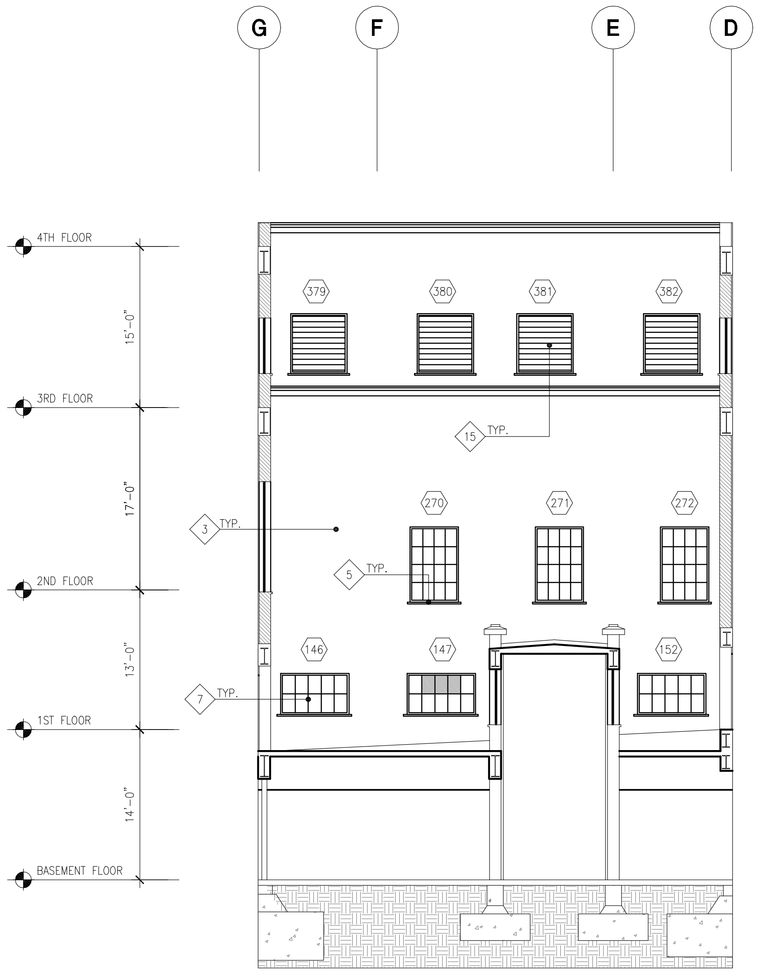

LIGHT COURT 1 (CORRIDOR ELEVATION WEST) | 1/8"=1'-0" | 3

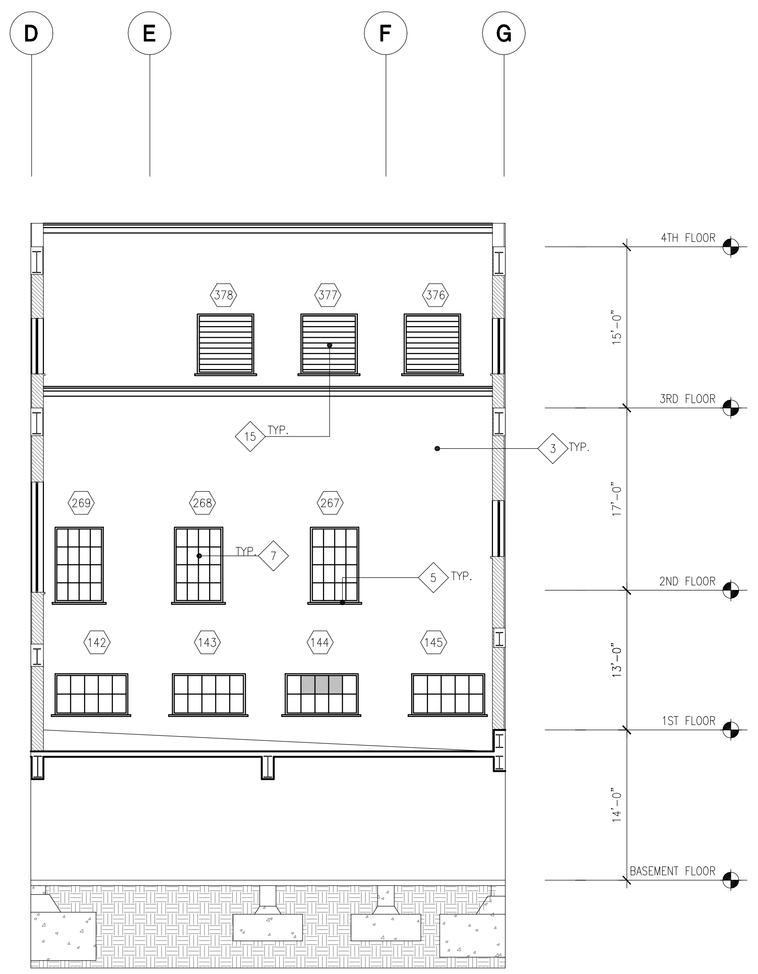

LIGHT COURT 1 (CORRIDOR ELEVATION EAST) | 1/8"=1'-0" | 2

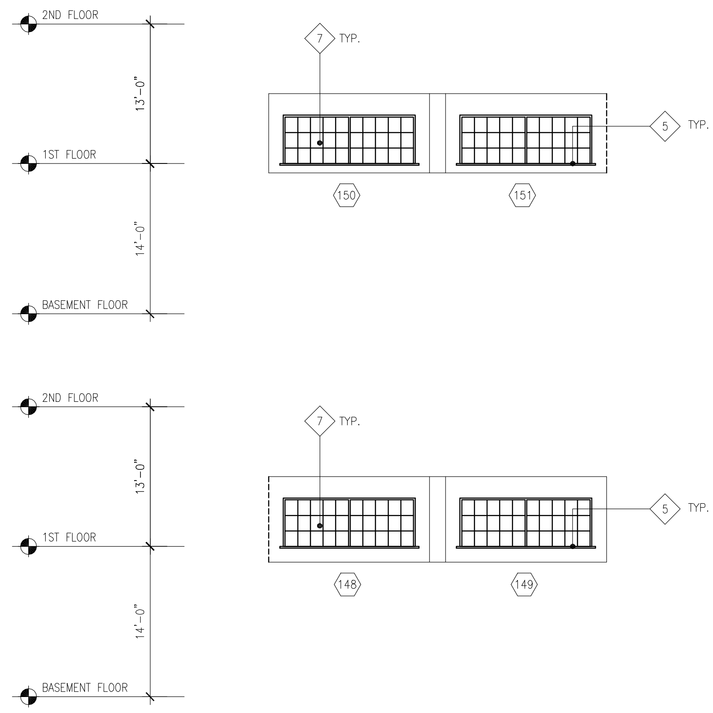

NOTE: REFER TO ELEVATION SHEET HA3.01 FOR TYPICAL EXTERIOR RESTORATION KEYNOTES

EXTERIOR WALL OF UPPER PART OF RAMPWAY | 1/8"=1'-0" | 1

NADEL
Architects Inc.

1990 So. Bundy Dr.
Fourth Floor
Los Angeles, CA 90025

T. 310.826.2100
F. 310.826.0182

www.nadelarc.com

CONSULTANT

NAKADA & ASSOCIATES

HISTORIC PRESERVATION ARCHITECT

COUNTY OF LOS ANGELES
THE HALL OF JUSTICE
STRUCTURAL RETROFIT PHASE

REVISIONS

1	
2	
3	
4	
5	
6	

DRAWING TITLE

LIGHT COURT 1
MISC ELEVATIONS

SCOPING DOCUMENTS 100% SUBMISSION AUGUST 2010

SCALE : 3/32"=1'-0"
DATE :
JOB NO :
SHEET NO.

HA3.07

ALL DRAWINGS AND WRITTEN MATERIAL APPEARING HEREIN CONSTITUTE THE ORIGINAL AND UNPUBLISHED WORK OF THE ARCHITECT AND THE SAME MAY NOT BE DUPLICATED, USED OR DISCLOSED WITHOUT THE WRITTEN CONSENT OF THE ARCHITECT. COPYRIGHT: NADEL ARCHITECTS INC. ALL RIGHTS RESERVED.

ALL DRAWINGS AND WRITTEN MATERIAL APPEARING HEREIN CONSTITUTE THE ORIGINAL AND UNPUBLISHED WORK OF THE ARCHITECT AND THE SAME MAY NOT BE DUPLICATED, USED OR DISCLOSED WITHOUT THE WRITTEN CONSENT OF THE ARCHITECT. COPYRIGHT: NADEL ARCHITECTS INC. ALL RIGHTS RESERVED.

1 LIGHT COURT 2 (NORTH ELEVATION)

3/32"=1'-0"

NOTE: REFER TO ELEVATION SHEET HA3.01 FOR TYPICAL EXTERIOR RESTORATION KEYNOTES

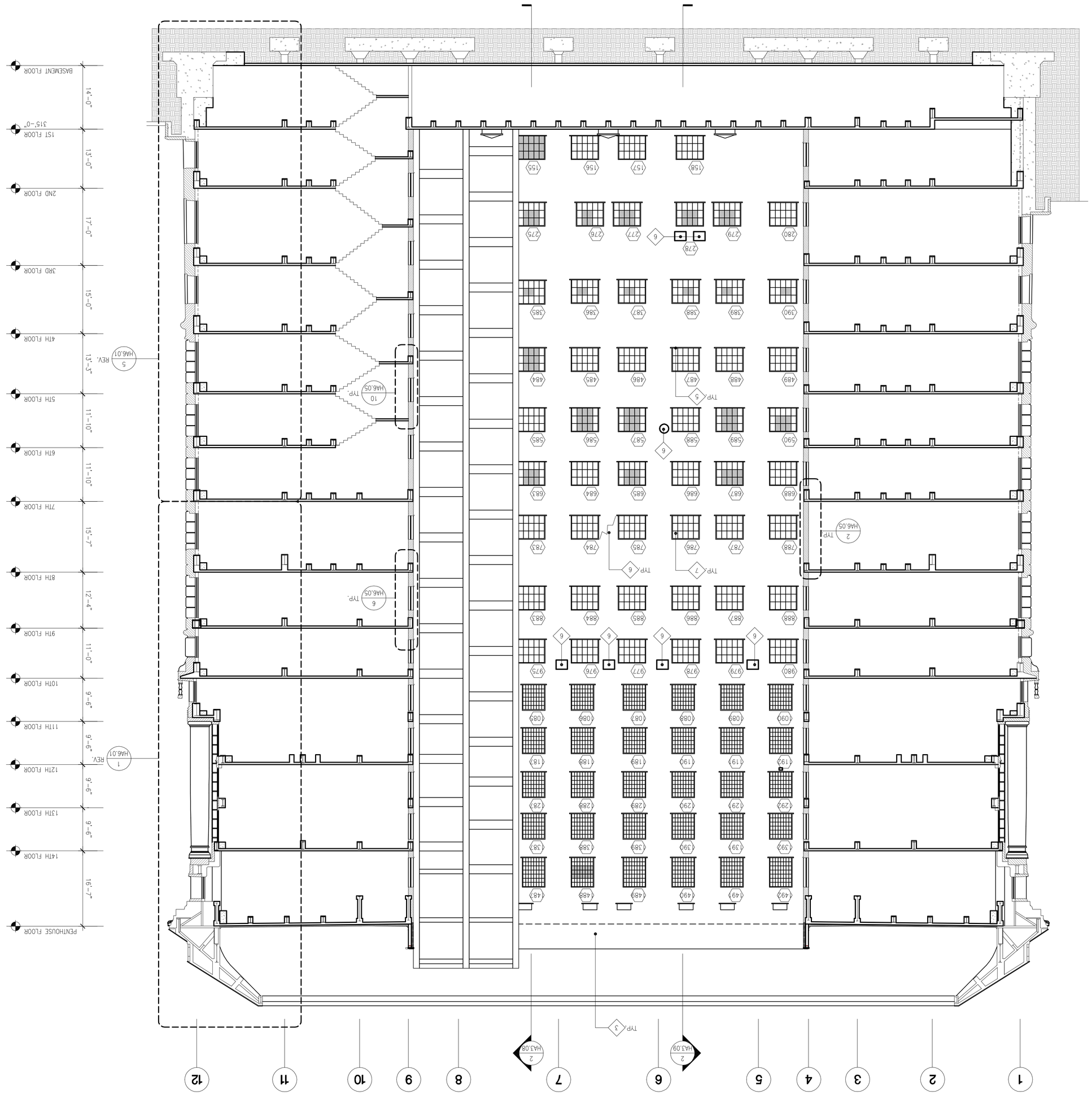

2 LIGHT COURT 2 (EAST ELEVATION)

3/32"=1'-0"

NOTE: REFER TO ELEVATION SHEET HA3.01 FOR TYPICAL EXTERIOR RESTORATION KEYNOTES

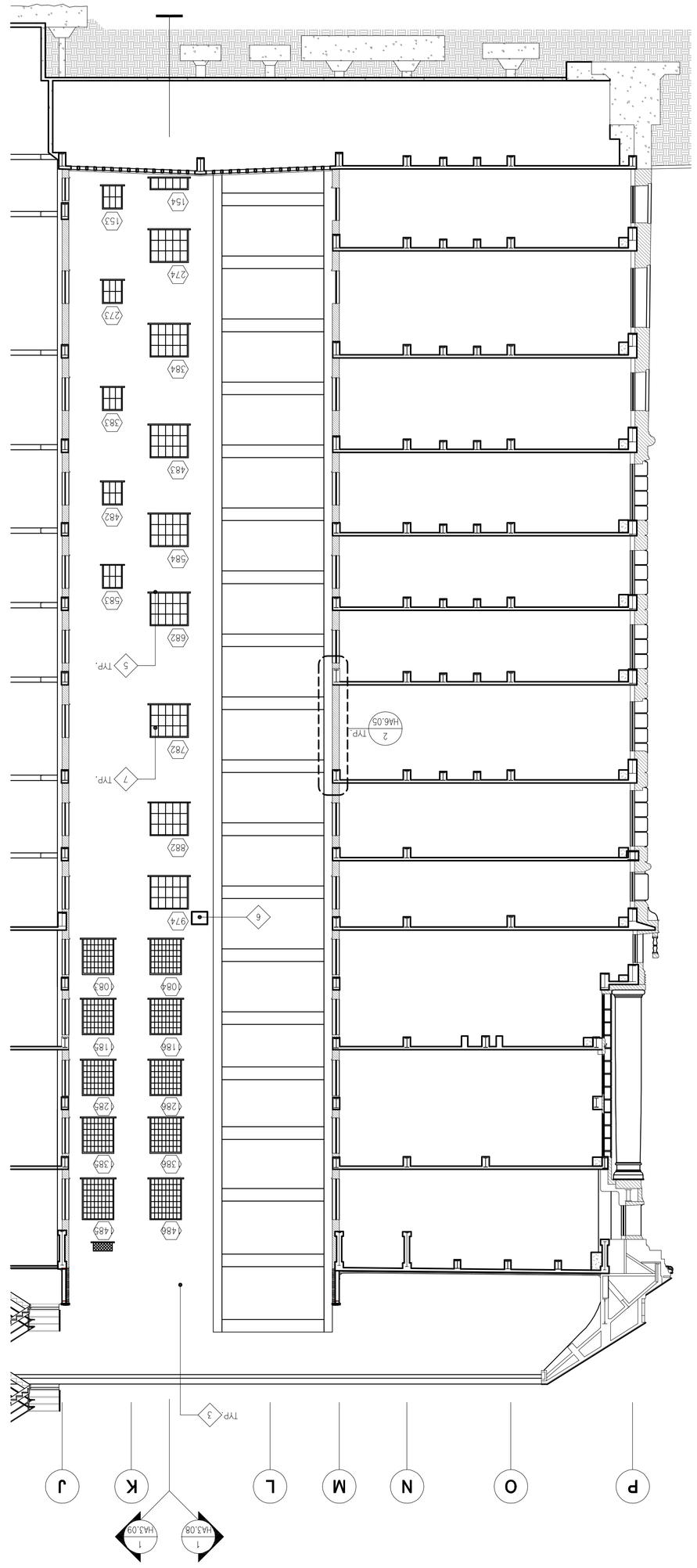

SCOPING DOCUMENTS 100% SUBMISSION AUGUST 2010

LIGHT COURT 2
NORTH & EAST ELEVATIONS

SCALE : 3/32"=1'-0"
DATE :
JOB NO :
SHEET NO. **HA3.08**

DRAWING TITLE

REVISIONS

CONSULTANT
NAKADA + ASSOCIATES
HISTORIC PRESERVATION ARCHITECT

COUNTY OF LOS ANGELES
THE HALL OF JUSTICE
STRUCTURAL RETROFIT PHASE

NADEL Architects Inc.
1990 So. Bundy Dr.
Fourth Floor
Los Angeles, CA 90025
T. 310.826.2100
F. 310.826.0182
www.nadelarc.com

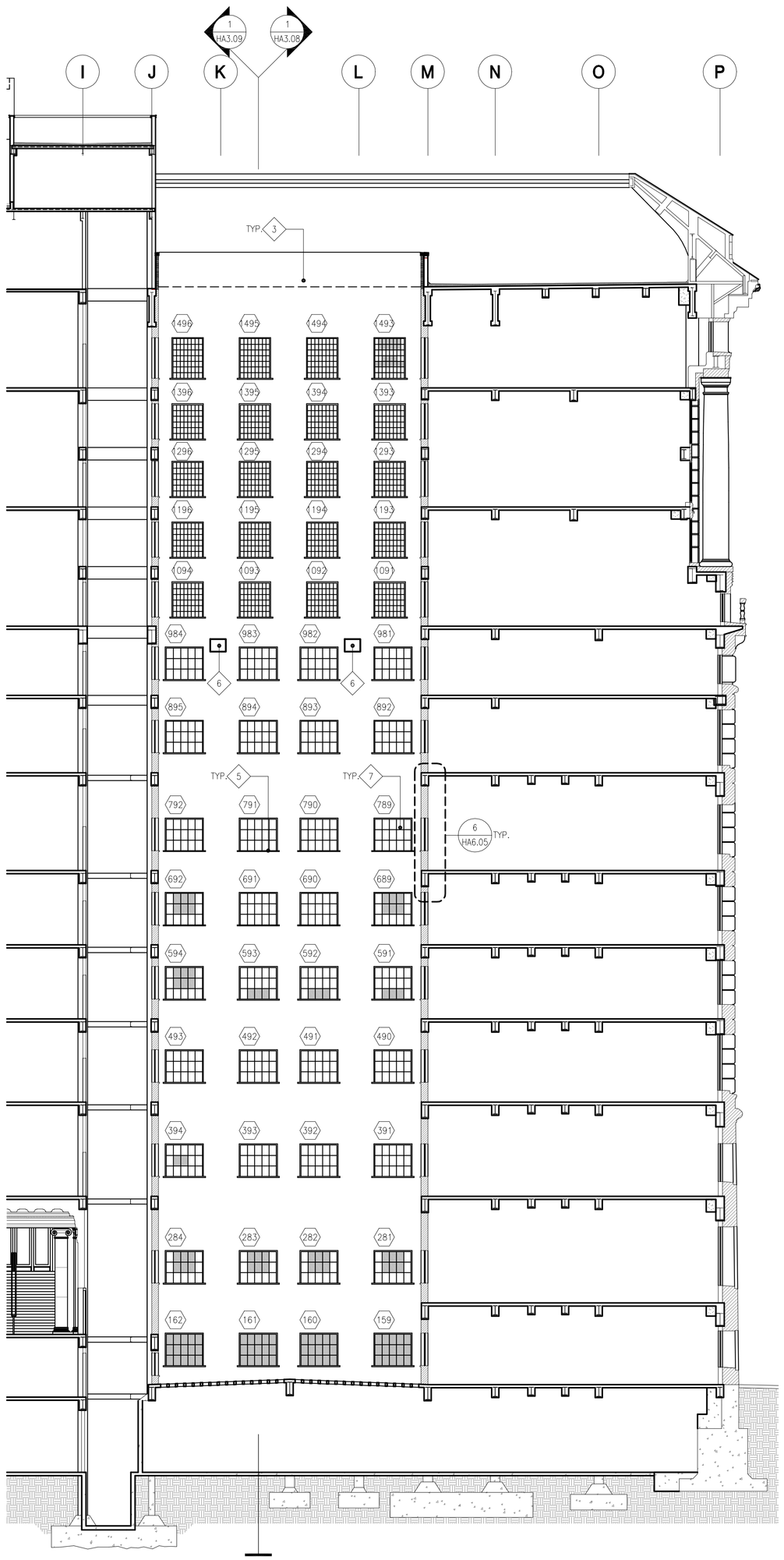

NOTE: REFER TO ELEVATION SHEET HA3.01 FOR TYPICAL EXTERIOR RESTORATION KEYNOTES

LIGHT COURT 2 (WEST ELEVATION) 3/32"=1'-0" 2

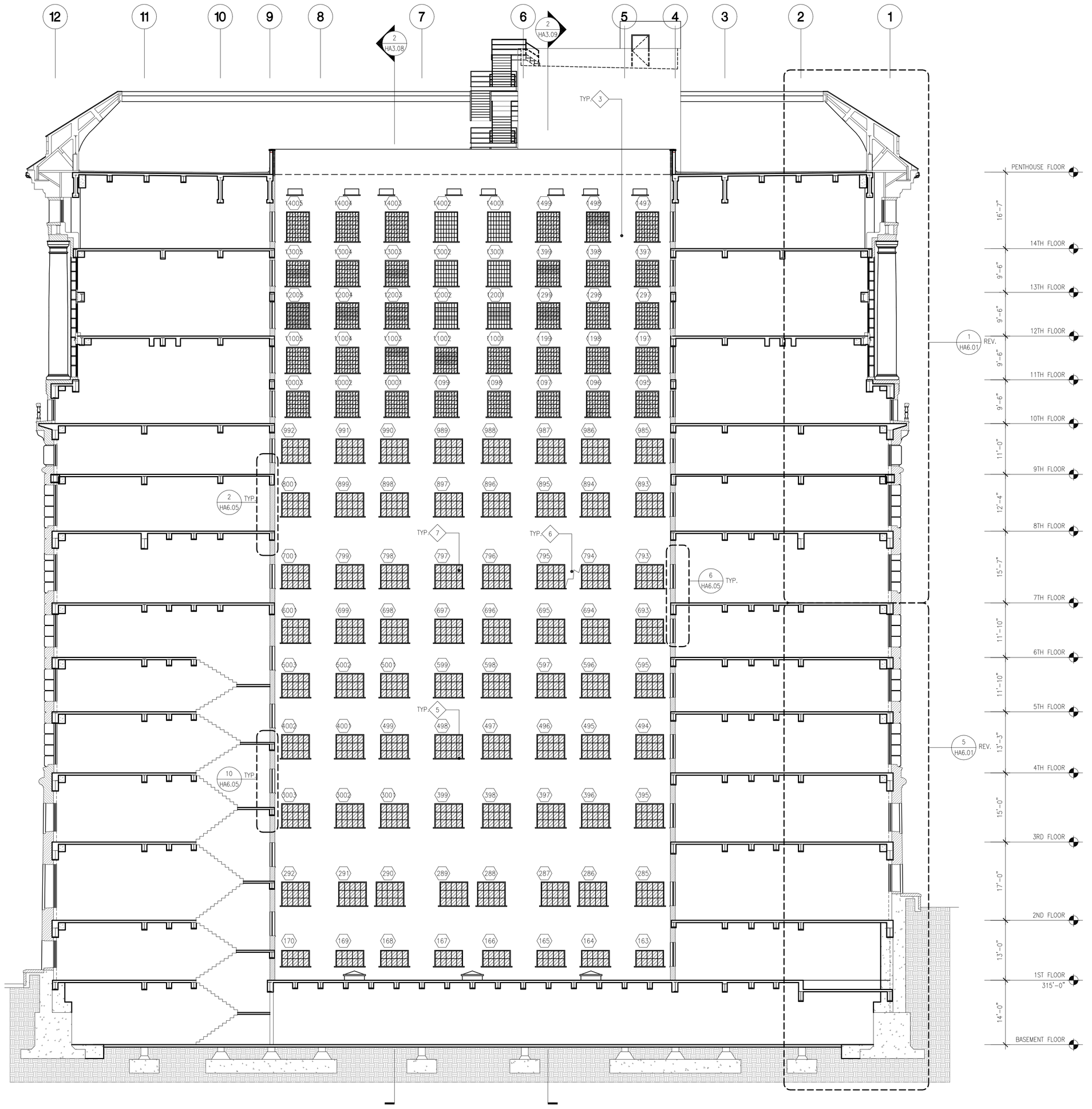

NOTE: REFER TO ELEVATION SHEET HA3.01 FOR TYPICAL EXTERIOR RESTORATION KEYNOTES

LIGHT COURT 2 (SOUTH ELEVATION) 3/32"=1'-0" 1

NADEL
Architects Inc.

1990 So. Bundy Dr.
Fourth Floor
Los Angeles, CA 90025

T. 310.826.2100
F. 310.826.0182

www.nadelarc.com

CONSULTANT

NAKADA & ASSOCIATES

HISTORIC PRESERVATION ARCHITECT

COUNTY OF LOS ANGELES

THE HALL OF JUSTICE

STRUCTURAL RETROFIT PHASE

REVISIONS

DRAWING TITLE

LIGHT COURT 2 SOUTH & WEST ELEVATIONS

SCALE : 3/32"=1'-0"

DATE :

JOB NO :

SHEET NO.

HA3.09

SCOPING DOCUMENTS 100% SUBMISSION AUGUST 2010

ALL DRAWINGS AND WRITTEN MATERIAL APPEARING HEREIN CONSTITUTE THE ORIGINAL AND UNPUBLISHED WORK OF THE ARCHITECT AND THE SAME MAY NOT BE DUPLICATED, USED OR DISCLOSED WITHOUT THE WRITTEN CONSENT OF THE ARCHITECT. COPYRIGHT: NADEL ARCHITECTS INC. ALL RIGHTS RESERVED.

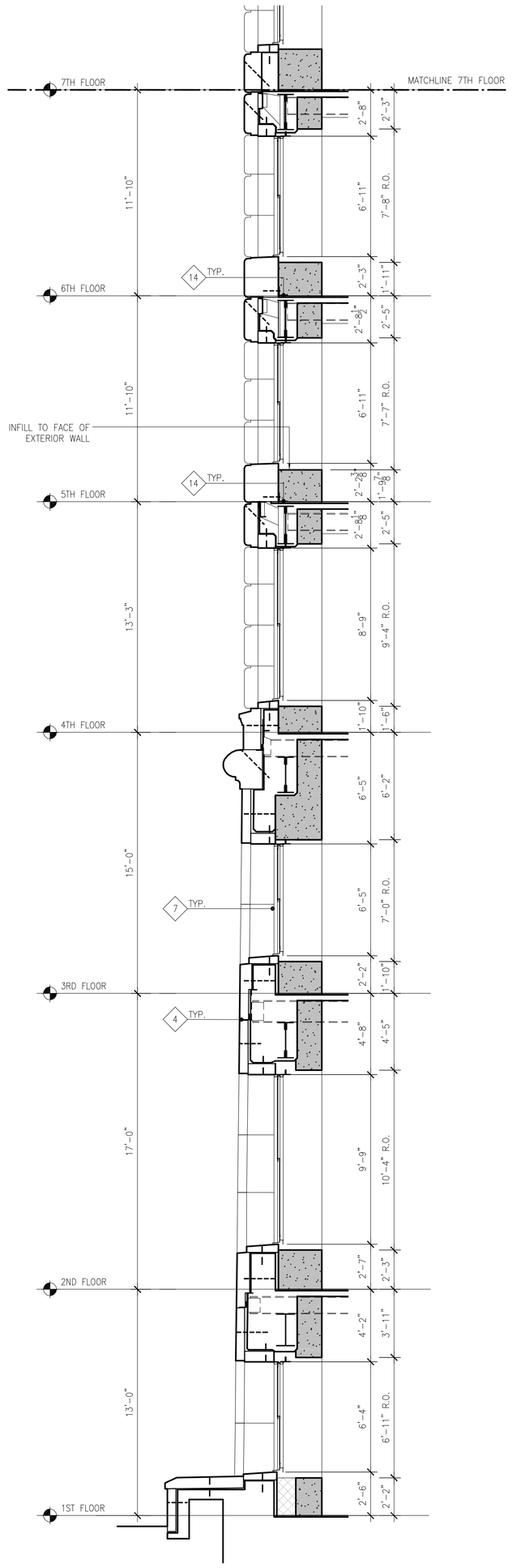

NOTE: REFER TO SHEET HA6.02 FOR TYPICAL EXTERIOR RESTORATION KEYNOTES

WALL SECTION @ SHEAR WALL 1/4"=1'-0" 17

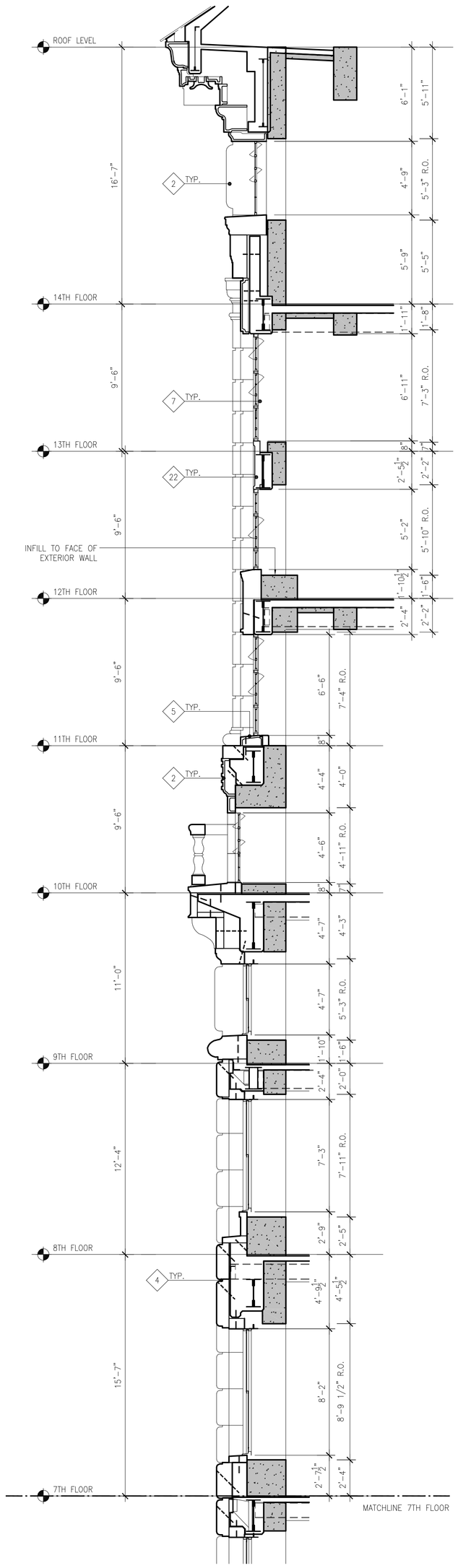

NOTE: REFER TO SHEET HA6.02 FOR TYPICAL EXTERIOR RESTORATION KEYNOTES

WALL SECTION @ SHEAR WALL 1/4"=1'-0" 13

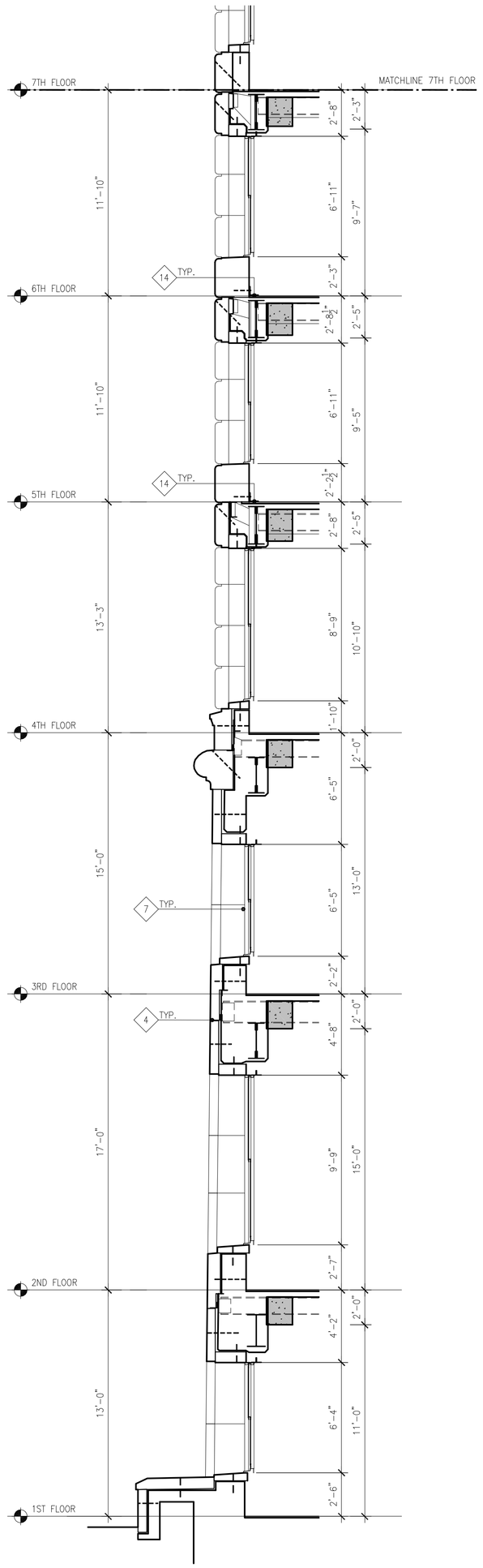

NOTE: REFER TO SHEET HA6.02 FOR TYPICAL EXTERIOR RESTORATION KEYNOTES

WALL SECTION @ DRAG BEAM 1/4"=1'-0" 9

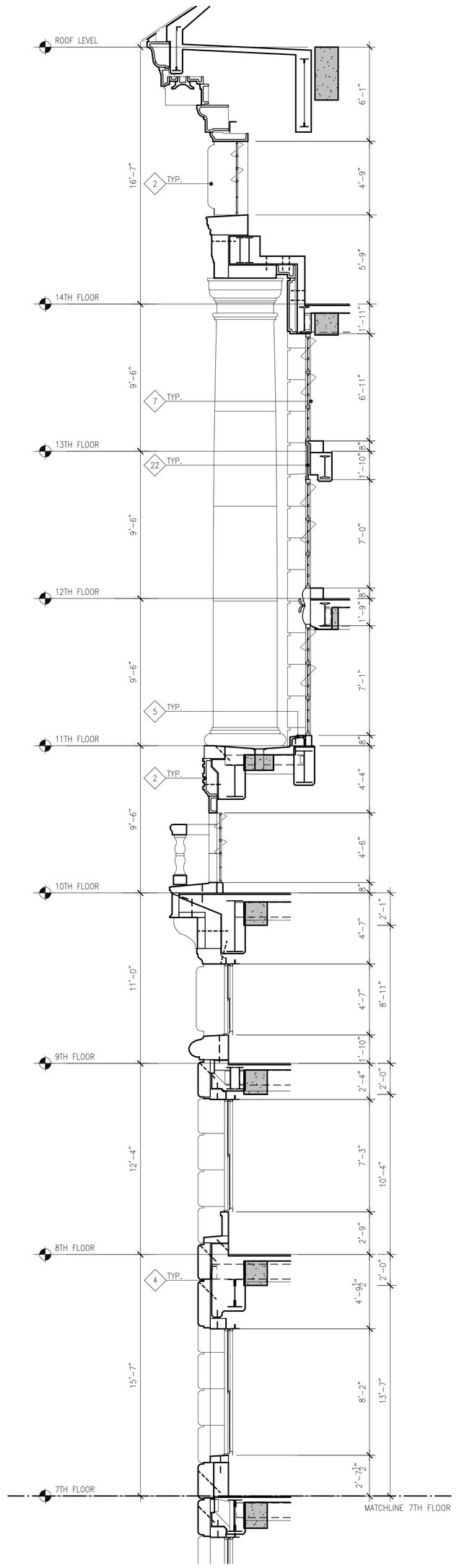

NOTE: REFER TO SHEET HA6.02 FOR TYPICAL EXTERIOR RESTORATION KEYNOTES

WALL SECTION @ DRAG BEAM 1/4"=1'-0" 5

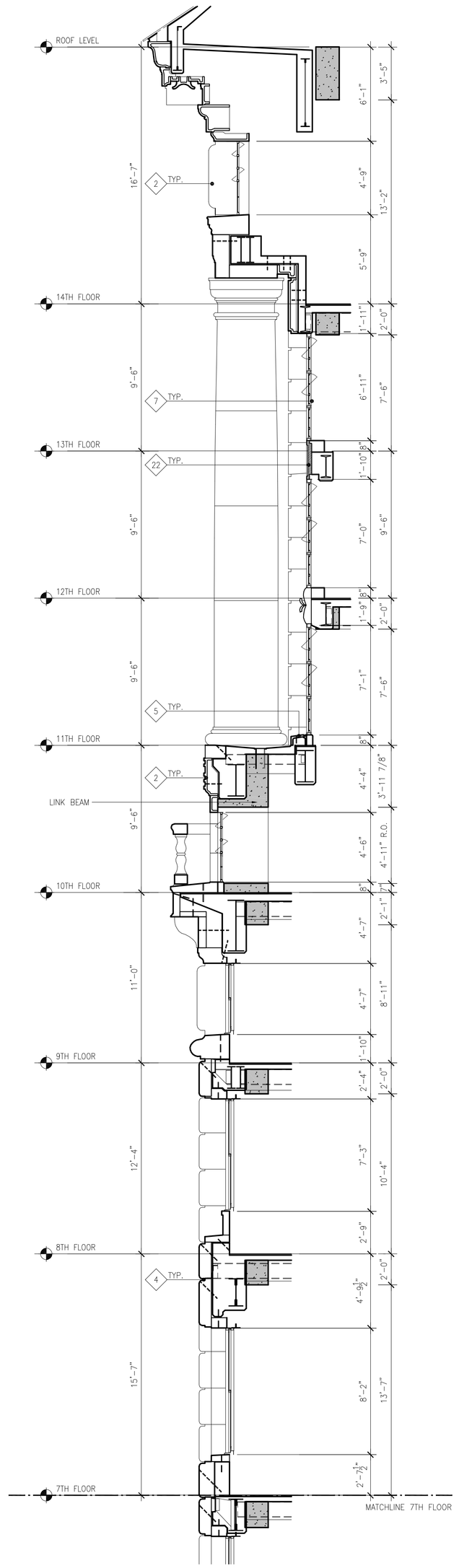

NOTE: REFER TO SHEET HA6.02 FOR TYPICAL EXTERIOR RESTORATION KEYNOTES

WALL SECTION @ DRAG BEAM 1/4"=1'-0" 1

NADEL
Architects Inc.

1990 So. Bundy Dr.
Fourth Floor
Los Angeles, CA 90025

T. 310.826.2100
F. 310.826.0182

www.nadelarc.com

CONSULTANT

NAKADA & ASSOCIATES

HISTORIC PRESERVATION ARCHITECT

COUNTY OF LOS ANGELES
THE HALL OF JUSTICE
STRUCTURAL RETROFIT PHASE

REVISIONS

DRAWING TITLE

EXTERIOR WALL SECTIONS

SCALE : 1/4"=1'-0"
DATE :
JOB NO :
SHEET NO.

HA6.01

SCOPING DOCUMENTS 100% SUBMISSION AUGUST 2010

ALL DRAWINGS AND WRITTEN MATERIAL APPEARING HEREIN CONSTITUTE THE ORIGINAL AND UNPUBLISHED WORK OF THE ARCHITECT AND THE SAME MAY NOT BE DUPLICATED, USED OR DISCLOSED WITHOUT THE WRITTEN CONSENT OF THE ARCHITECT. COPYRIGHT: NADEL ARCHITECTS INC. ALL RIGHTS RESERVED.

TYPICAL EXTERIOR RESTORATION KEYNOTES

1. CLEAN ALL EXTERIOR STONE FACING. REFER TO SPECIFICATIONS FOR CLEANING PRODUCTS AND METHODS.
2. CLEAN ALL EXTERIOR TERRA COTTA FACING WITH PROSOCO SUREKLEAN; REFER TO SPECIFICATIONS FOR CLEANING PRODUCTS AND METHODS
3. CLEAN ALL EXTERIOR GLAZED BRICK WITH PROSOCO SUREKLEAN; REFER TO SPECIFICATIONS FOR CLEANING PRODUCTS AND METHODS
4. REPOINT EXTERIOR STONE & TERRA COTTA JOINTS AS REQUIRED; ASSUME 20% OF JOINTS TO BE REPOINTED. (REFER TO SPEC. FOR REPOINTING CRITERIA)
5. REPAIR SPALLING AT TERRA COTTA WINDOW SILLS WITH SPECIFIED MORTAR & GLAZE REPAIR. (ASSUME 30% OF SILLS REQUIRE REPAIR)
6. REPLACE EXISTING DAMAGED GLAZED BRICK WITH NEW GLAZED BRICK TO MATCH
7. REHABILITATE EXISTING EXTERIOR WINDOWS. (REFER TO WINDOW SCHEDULE ON SHEET HA7.04)
8. REPLACE EXISTING NON-HISTORIC STOREFRONT DOORS WITH NEW BRONZE DOORS TO MATCH ORIGINAL HISTORIC DOORS. (4 DOORS REQUIRED)
9. RE-INSTALL DISLODGED GRANITE FACING AS REQUIRED
10. REMOVE 2 EXISTING BRONZE DOORS & REMOVE CENTER POST; RE-INSTALL EXISTING BRONZE DOORS WITH AUTOMATIC OPENING DEVICE.
11. INSTALL HELIFIX ANCHORS AT STONE, TERRA COTTA, & BRICK FACING. ANCHORS ARE TO BE TYPICALLY INSTALLED FROM THE INTERIOR. STONE & TERRA COTTA UNITS AT FLOOR SLABS, WHICH DO NOT PERMIT INTERIOR ANCHORING, SHALL BE INSTALLED FROM THE EXTERIOR; REFER TO DETAILS FOR LOCATION. ANCHOR SUBCONTRACTOR SHALL DETERMINE THE NUMBER OF ANCHORS REQUIRED PER MASONRY UNIT BASED ON 1 PIN / 1000 POUNDS OF WEIGHT; REFER TO STRUCT. TO DETERMINE NUMBER OF ANCHORS PER MASONRY UNIT. INTERIOR ANCHORS AT SHEAR WALLS TO BE INSTALLED PRIOR TO SHEAR WALL CONSTRUCTION.
12. PROVIDE STAINLESS ROD BRACING AT EXISTING TERRA COTTA BALLUSTRADE.
13. PROVIDE NEW LEDGER AT BOTTOM OF EXISTING STONE VENEER.
14. PROVIDE STEEL BENT PLATE AT STONE SILL TO ATTACH STONE ANCHORS TO THE EXTERIOR FACADE.
15. REMOVE ENTIRE WINDOW, AND REPLACE WITH NEW MECHANICAL LOUVERS; WINDOW MULLIONS TO BE SALVAGED; SALVAGED WINDOW MULLIONS AND SASH ARE TO BE RE-USED TO REPLACE MISSING WINDOW MULLIONS AND SASH AS INDICATED ON DRAWINGS. SEE WINDOW SCHEDULE AND ELEVATIONS FOR LOCATION OF MULLION REPAIR.
16. PROVIDE FIRESTOP SYSTEM AT CONCRETE FLOOR SLAB AND WINDOW GLAZING CONNECTION.
17. PROVIDE PROSOCO ANTI-GRAFFITTI COATING (SACRIFICIAL COATING SC-1) AT ALL EXTERIOR MASONRY FROM 4TH FLOOR TO GRADE.
18. REMOVE EXISTING GRAFFITTI AND PAINT WITH PROSOCO HEAVY DUTY PAINT STRIPPER 20048.
19. CLEAN EXISTING EXTERIOR BRONZE ENTRANCE FRAMES AND LIGHT COURT WINDOWS.
20. CLEAN AND REPAIR EXISTING GUTTER AS REQUIRED.
21. CLEAN EXISTING COPPER ROOF WITH MICRO ABRASIVE CLEANING SYSTEM (JOS OR EQUAL).
22. REMOVE EXISTING PAINT ON ALL METAL SPANDRELS; RE-PAINT TO MATCH HISTORICAL
23. CLEAN EXISTING EXTERIOR METAL PANEL; PRIME AND RE-PAINT TO MATCH HISTORICAL
24. REMOVE EXISTING METAL INFILL PANEL AND INSTALL CLEAR GLASS; FIELD VERIFY LOCATIONS
25. REMOVE ALL PANELS OR SCREENS ON THE EXTERIOR/INTERIOR OF HISTORICAL WINDOW; FIELD VERIFY LOCATIONS
26. REMOVE REFLECTIVE FILM ON GLASS; FIELD VERIFY LOCATIONS

DENOTES WINDOW DE-INSTALLED IN PREVIOUS PHASE TO BE RE-INSTALLED. (REFER TO WINDOW SCHEDULE)

TONE REPRESENTS WINDOWS WHERE EXISTING STEEL MULLION OR FRAME HAS BEEN REMOVED. REPLACE MISSING LIGHT COURT FRAMES, WHERE APPLICABLE, USING THE SALVAGED WINDOW FRAMES WHERE MECHANICAL LOUVERS ARE BEING INSTALLED. ALL EXTERIOR WINDOWS TO BE REPLACED TO MATCH HISTORICAL. (FIELD VERIFY) (REFER TO WINDOW SCHEDULE)

DENOTES OBSCURE GLASS TO REMAIN. (REFER TO WINDOW SCHEDULE)

DENOTES LOCATION OF PAINT STRIPPER

DENOTES LOCATION OF WINDOWS REPLACED WITH NEW MECHANICAL LOUVERS

DENOTES LOCATION OF EXISTING WINDOW FRAMES TO BE REHABILITATED. PROVIDE NEW CUSTOM FABRICATED WINDOW SASH AND GLAZING TO MATCH ORIGINAL HISTORIC SASH. (NOTE: WINDOWN SASHES ARE MISSING)

DENOTES LOCATION OF FIRE ESCAPE OPENING. FABRICATE NEW STEEL FRAMED WINDOW. (REFER TO WINDOW SCHEDULE)

EXTERIOR RESTORATION KEYNOTES | 13

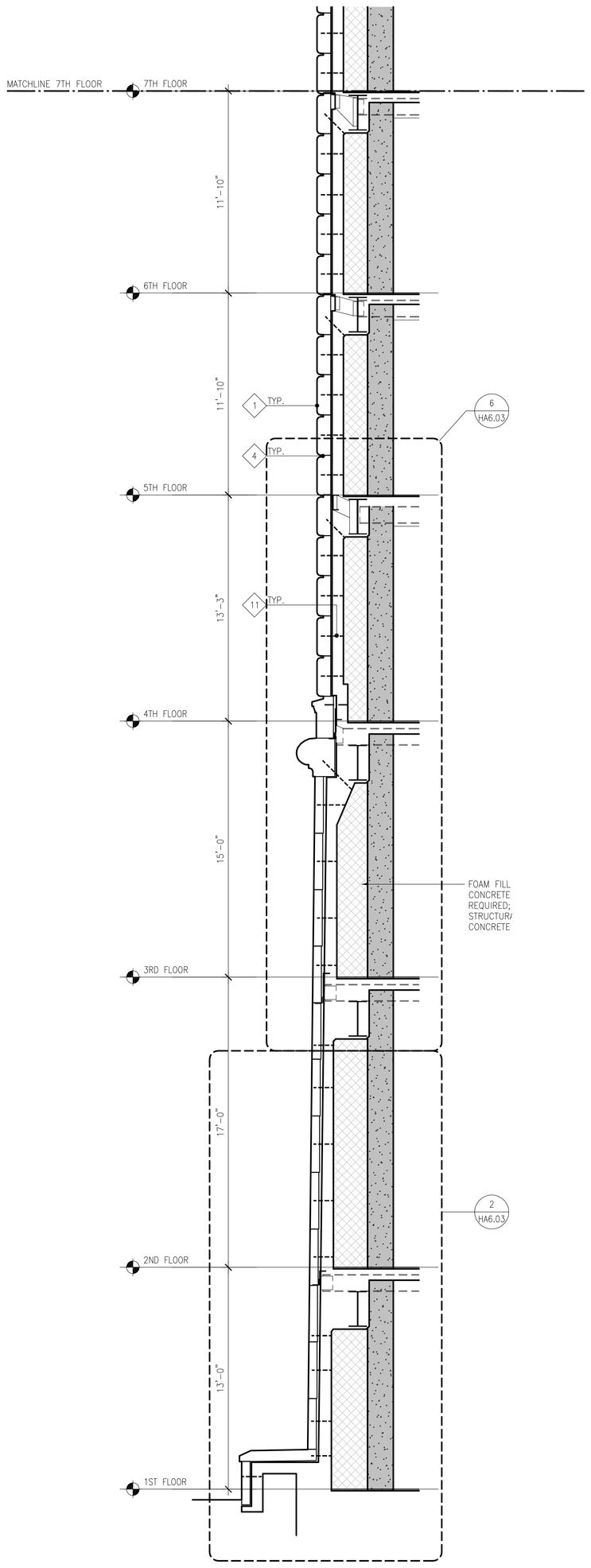

NOTE: REFER TO SHEET HA6.02 FOR TYPICAL EXTERIOR RESTORATION KEYNOTES

WALL SECTION @ PILASTER | 1/4"=1'-0" | 9

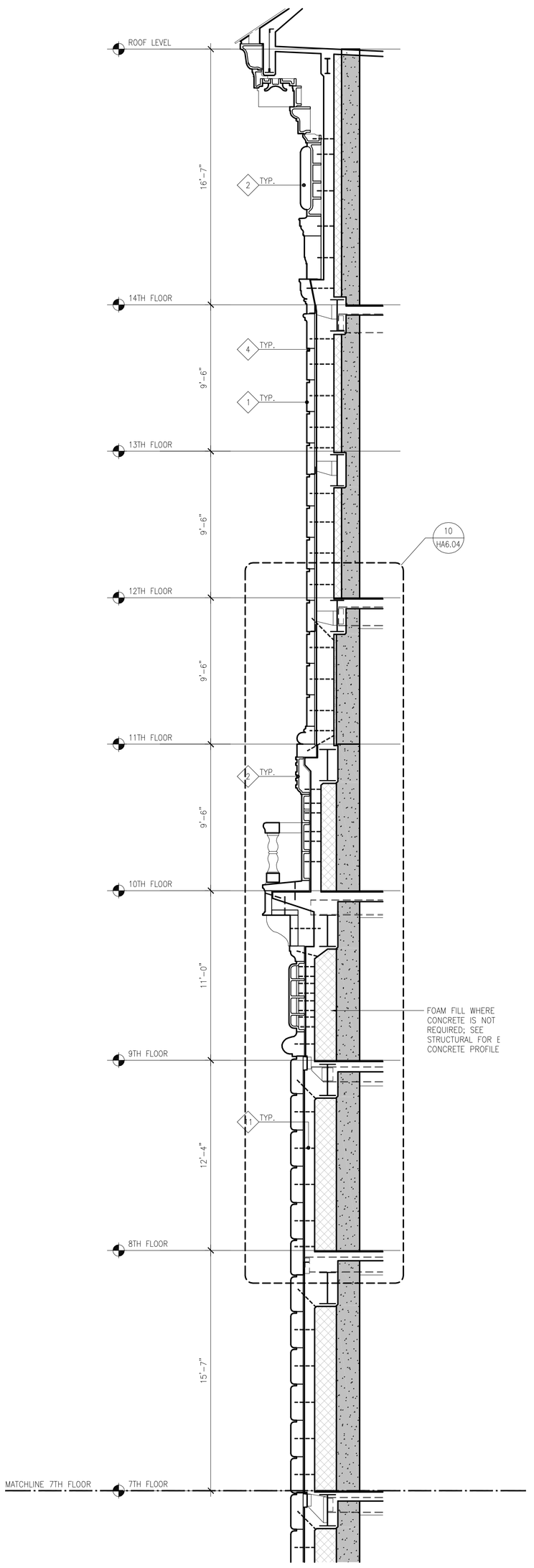

NOTE: REFER TO SHEET HA6.02 FOR TYPICAL EXTERIOR RESTORATION KEYNOTES

WALL SECTION @ PILASTER THROUGH PILASTER | 1/4"=1'-0" | 5

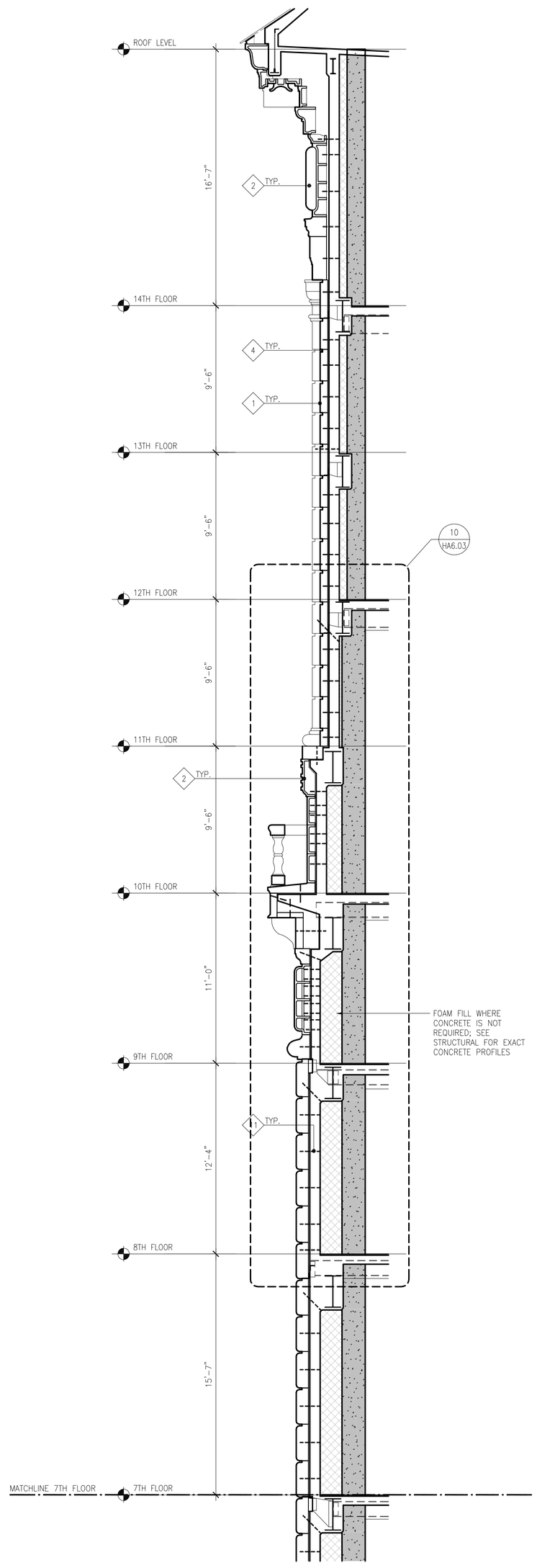

NOTE: REFER TO SHEET HA6.02 FOR TYPICAL EXTERIOR RESTORATION KEYNOTES

WALL SECTION @ PILASTER THROUGH WALL | 1/4"=1'-0" | 1

NADEL
Architects Inc.

1990 So. Bundy Dr.
Fourth Floor
Los Angeles, CA 90025

T. 310.826.2100
F. 310.826.0182

www.nadelarc.com

CONSULTANT

NAKADA & ASSOCIATES

HISTORIC PRESERVATION ARCHITECT

COUNTY OF LOS ANGELES
THE HALL OF JUSTICE
STRUCTURAL RETROFIT PHASE

REVISIONS

1	
2	
3	
4	
5	
6	

DRAWING TITLE

EXTERIOR WALL SECTIONS

SCOPING DOCUMENTS 100% SUBMISSION AUGUST 2010

SCALE : 1/4"=1'-0"
DATE :
JOB NO :
SHEET NO.

HA6.02

ALL DRAWINGS AND WRITTEN MATERIAL APPEARING HEREIN CONSTITUTE THE ORIGINAL AND UNPUBLISHED WORK OF THE ARCHITECT AND THE SAME MAY NOT BE DUPLICATED, USED OR DISCLOSED WITHOUT THE WRITTEN CONSENT OF THE ARCHITECT. COPYRIGHT: NADEL ARCHITECTS INC. ALL RIGHTS RESERVED.

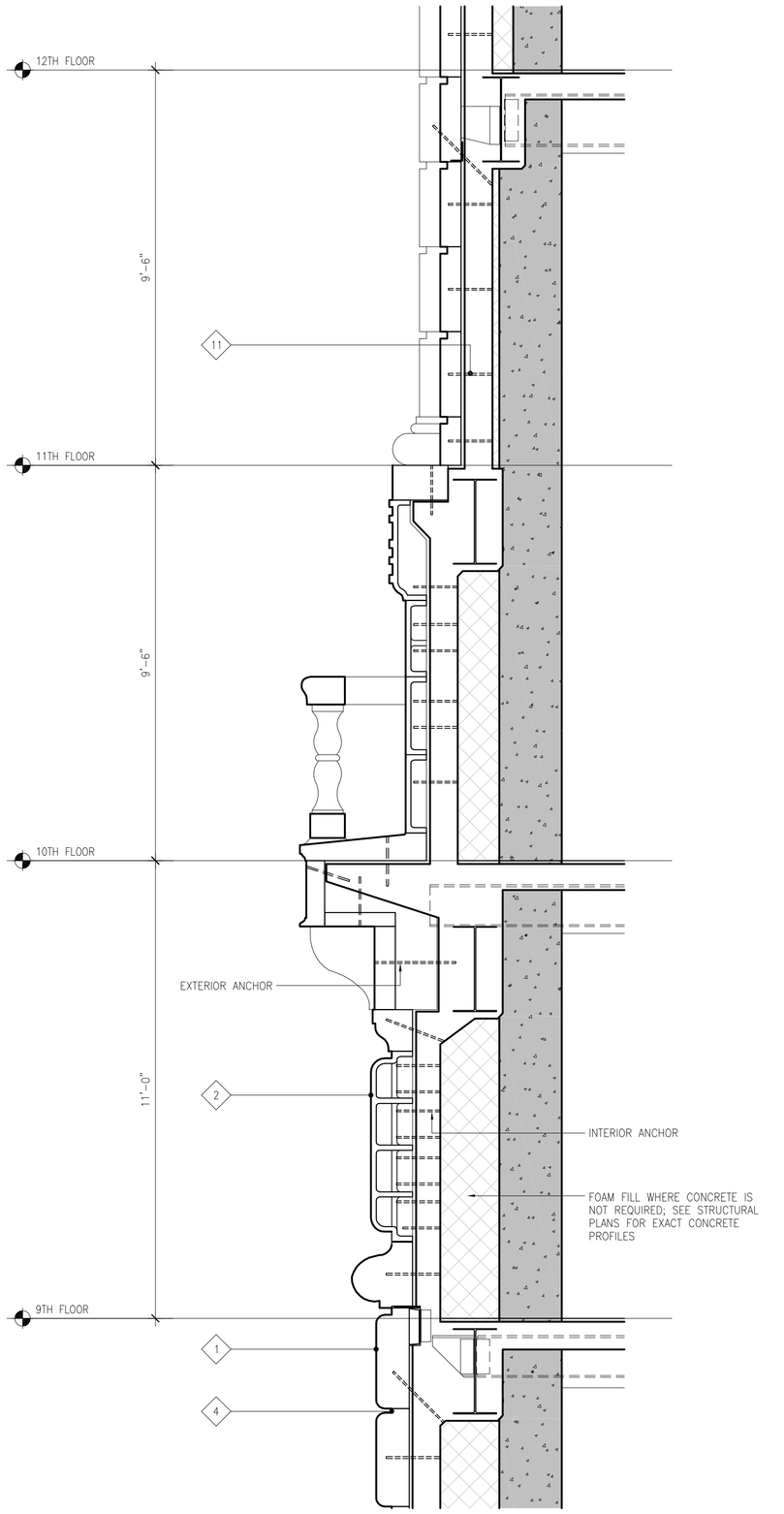

NOTE: REFER TO SHEET HA6.02 FOR TYPICAL EXTERIOR RESTORATION KEYNOTES

SECTION DETAIL @ PILASTER 1/2"=1'-0" 10

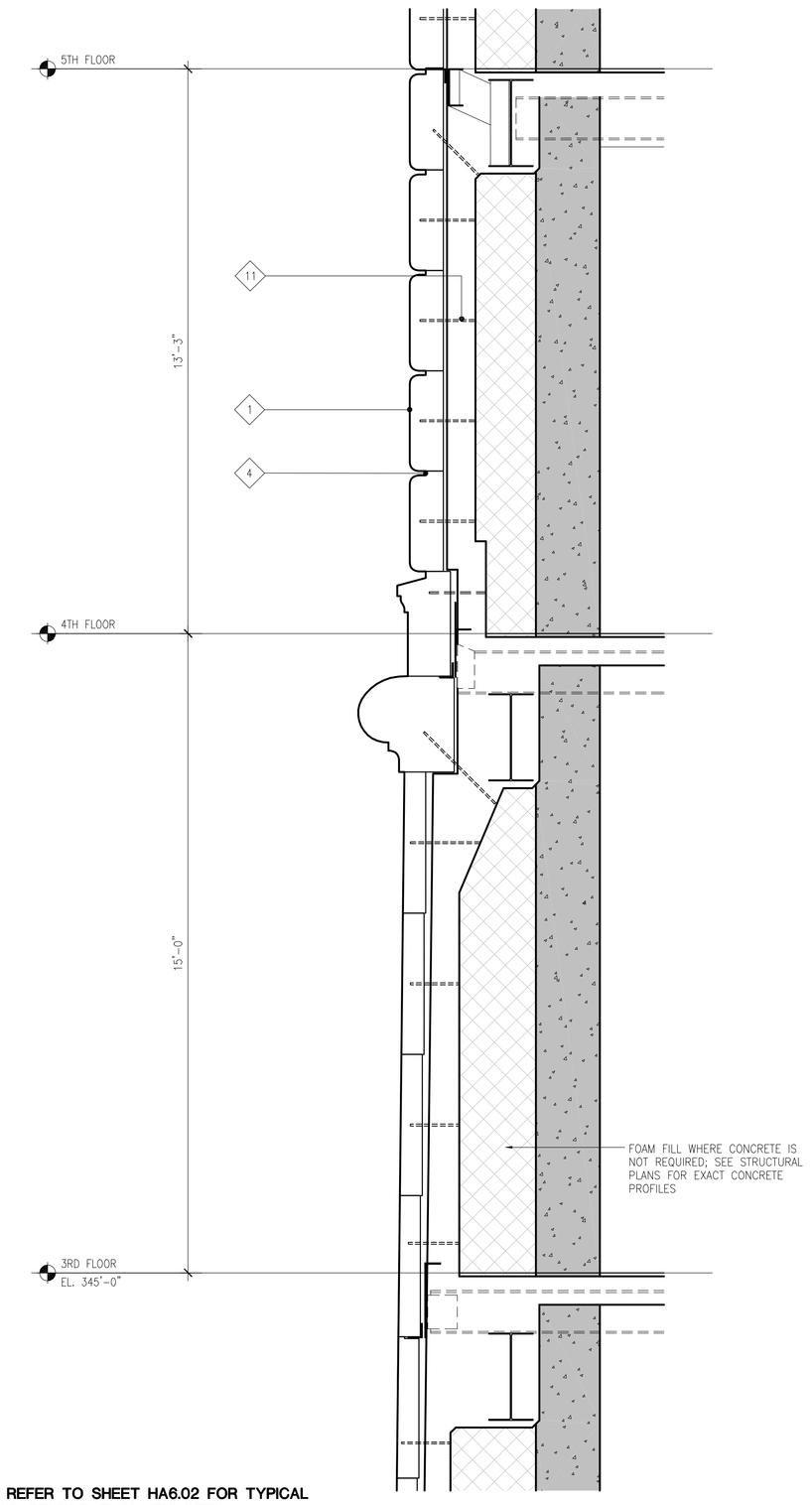

NOTE: REFER TO SHEET HA6.02 FOR TYPICAL EXTERIOR RESTORATION KEYNOTES

SECTION DETAIL @ PILASTER 1/2"=1'-0" 6

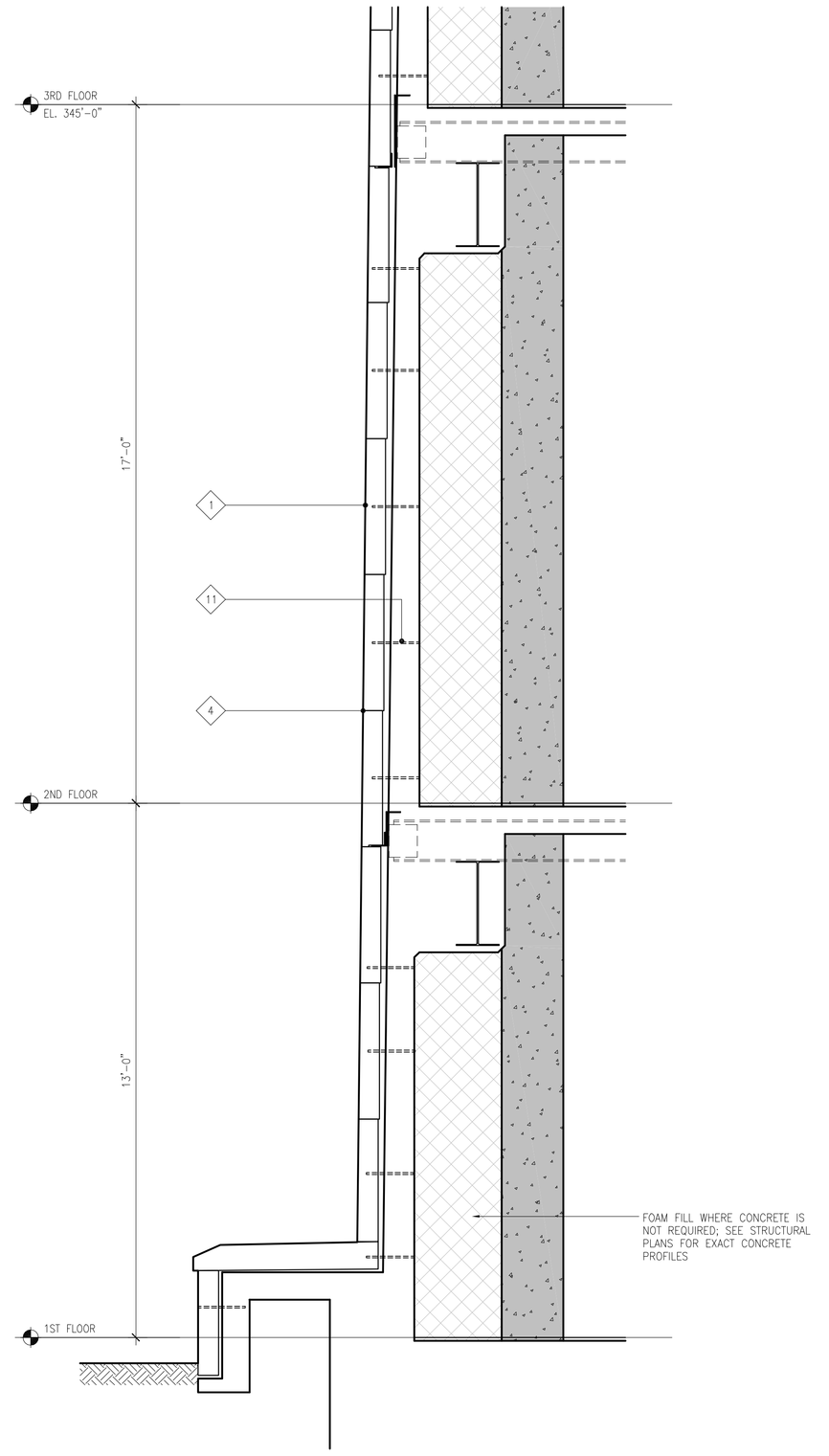

NOTE: REFER TO SHEET HA6.02 FOR TYPICAL EXTERIOR RESTORATION KEYNOTES

SECTION DETAIL @ PILASTER 1/2"=1'-0" 2

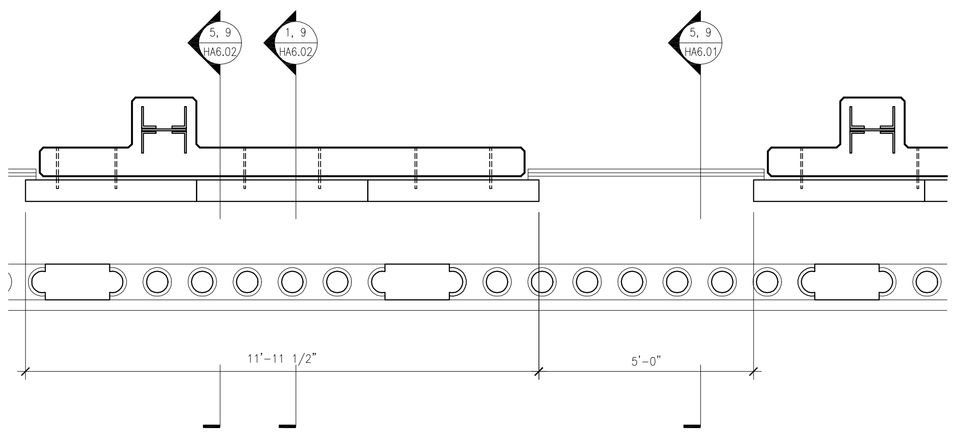

PLAN DETAIL (10TH FLOOR) 1/2"=1'-0" 9

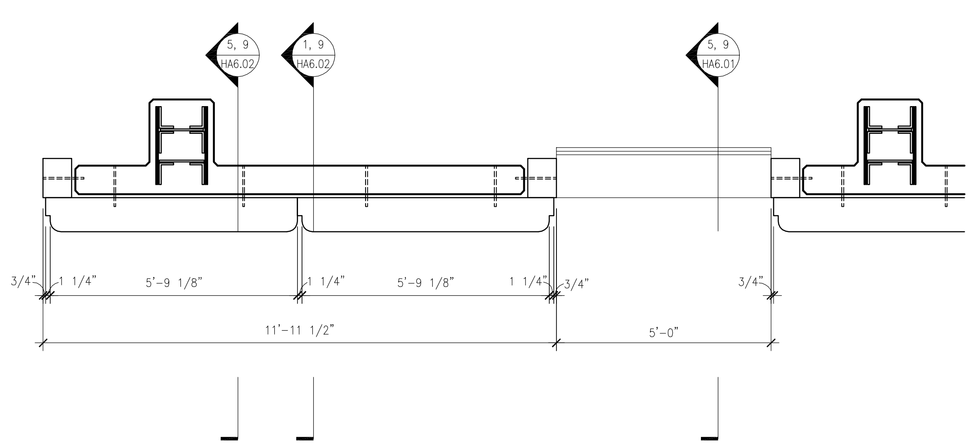

PLAN DETAIL (4TH - 9TH FLOORS) 1/2"=1'-0" 5

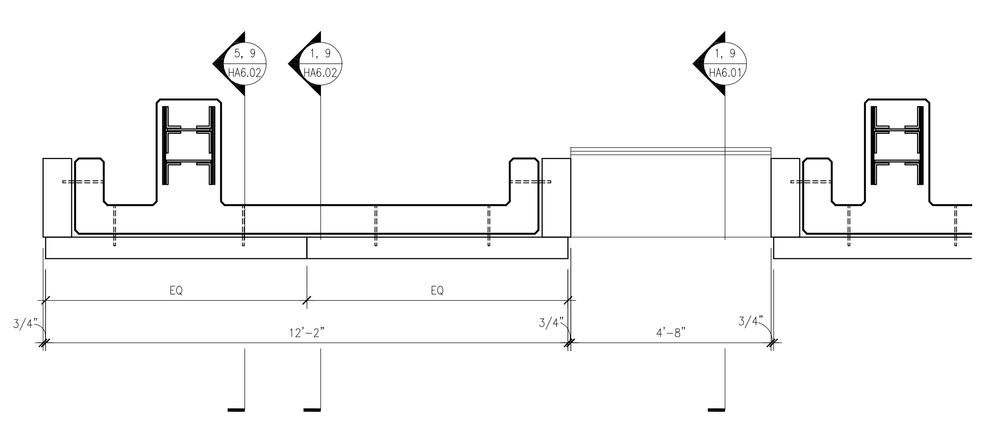

PLAN DETAIL (1ST - 3RD FLOORS) 1/2"=1'-0" 1

NADEL
Architects Inc.

1990 So. Bundy Dr.
Fourth Floor
Los Angeles, CA 90025

T. 310.826.2100
F. 310.826.0182

www.nadelarc.com

CONSULTANT

NAKADA & ASSOCIATES

HISTORIC PRESERVATION ARCHITECT

COUNTY OF LOS ANGELES
THE HALL OF JUSTICE
STRUCTURAL RETROFIT PHASE

REVISIONS

1	
2	
3	
4	
5	
6	

DRAWING TITLE

STONE REHABILITATION AND ANCHOR DETAILS

SCOPING DOCUMENTS 100% SUBMISSION AUGUST 2010

SCALE : 1/2"=1'-0"
DATE :
JOB NO :
SHEET NO.

HA6.03

ALL DRAWINGS AND WRITTEN MATERIAL APPEARING HEREIN CONSTITUTE THE ORIGINAL AND UNPUBLISHED WORK OF THE ARCHITECT AND THE SAME MAY NOT BE DUPLICATED, USED OR DISCLOSED WITHOUT THE WRITTEN CONSENT OF THE ARCHITECT. COPYRIGHT: NADEL ARCHITECTS INC. ALL RIGHTS RESERVED.

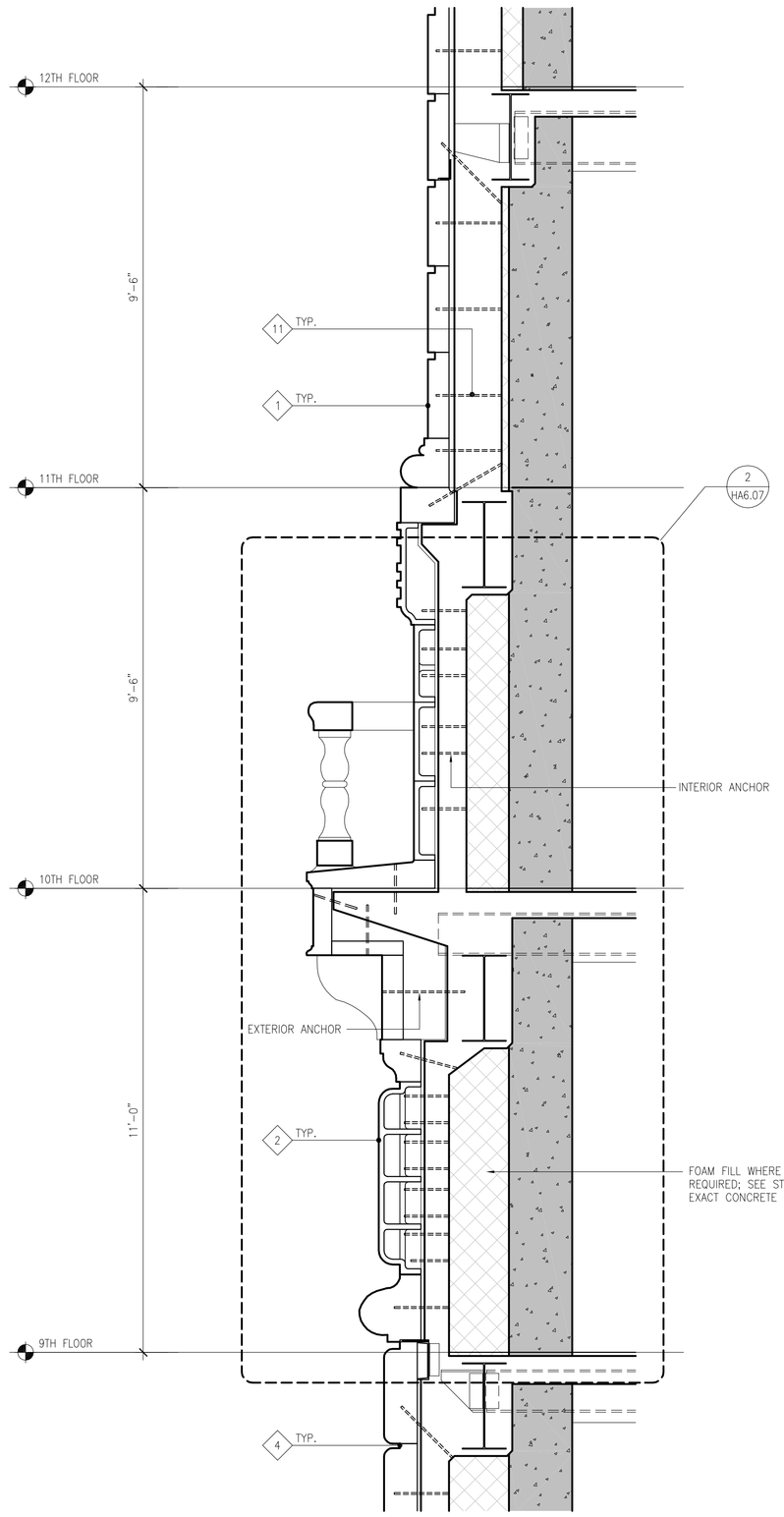

NOTE: REFER TO SHEET HA6.02 FOR TYPICAL EXTERIOR RESTORATION KEYNOTES

SECTION DETAIL THROUGH PILASTER 1/2"=1'-0" 10

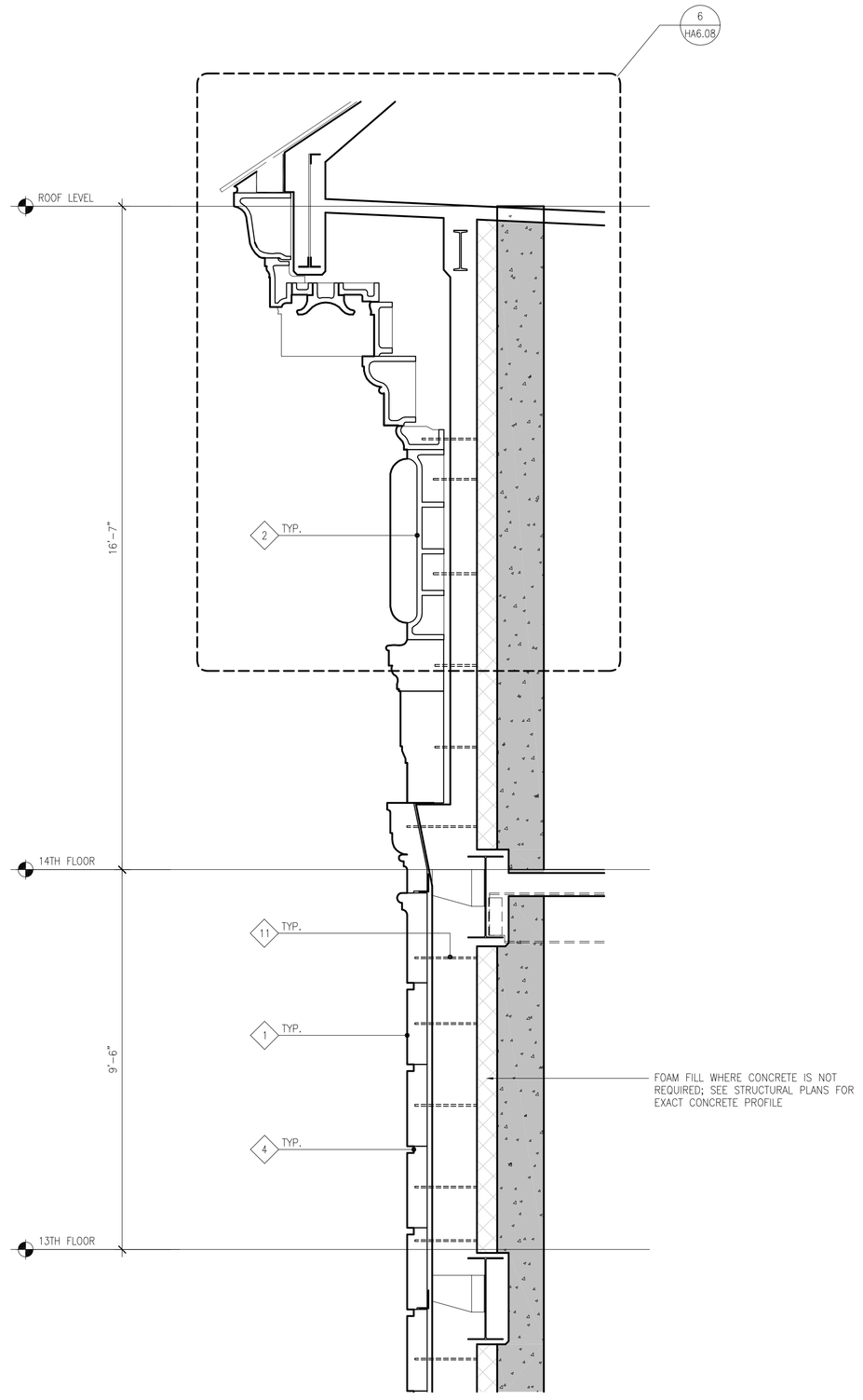

NOTE: REFER TO SHEET HA6.02 FOR TYPICAL EXTERIOR RESTORATION KEYNOTES

SECTION DETAIL THROUGH PILASTER 1/2"=1'-0" 6

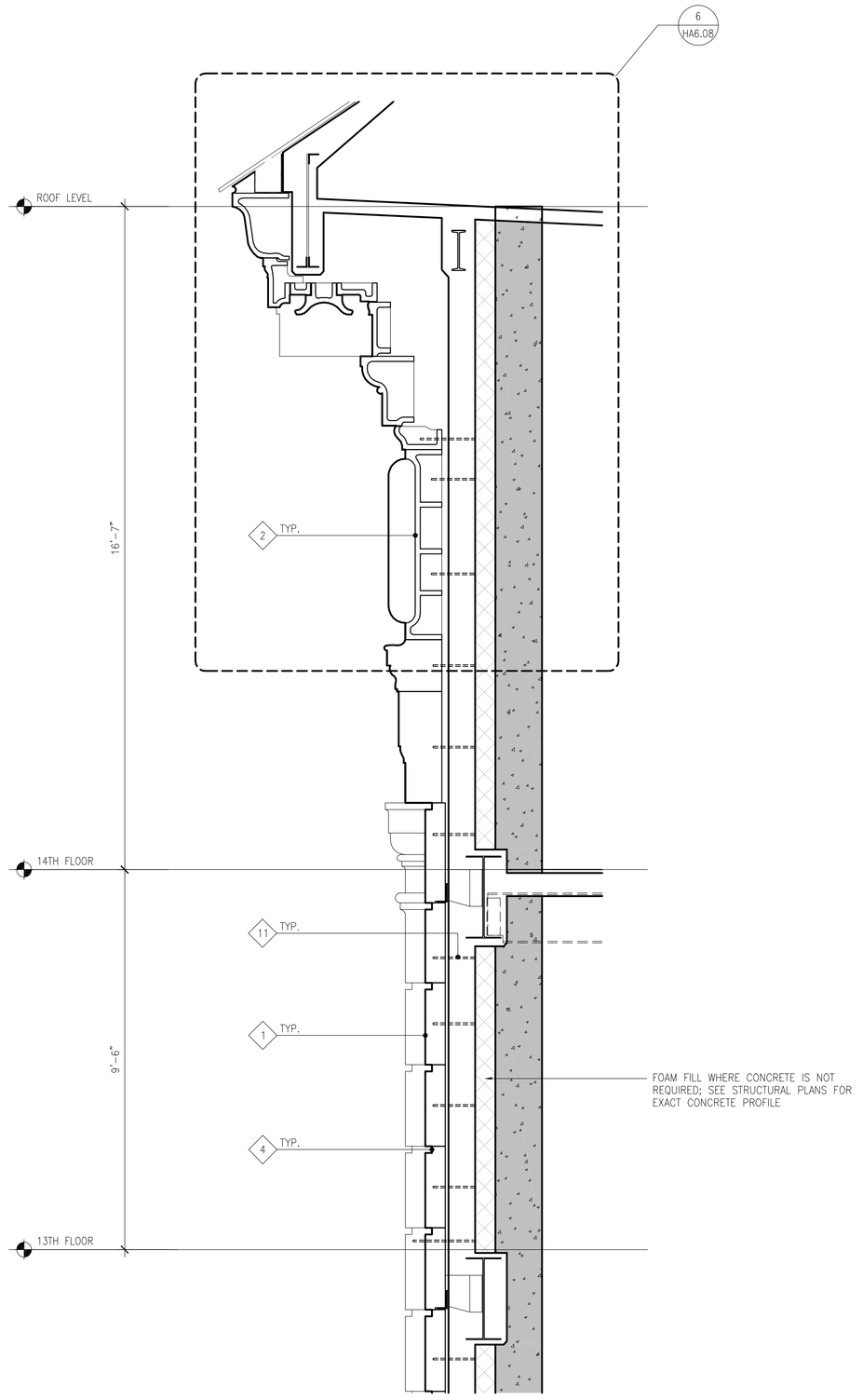

NOTE: REFER TO SHEET HA6.02 FOR TYPICAL EXTERIOR RESTORATION KEYNOTES

SECTION DETAIL @ PILASTER 1/2"=1'-0" 2

PLAN DETAIL 1/2"=1'-0" 9

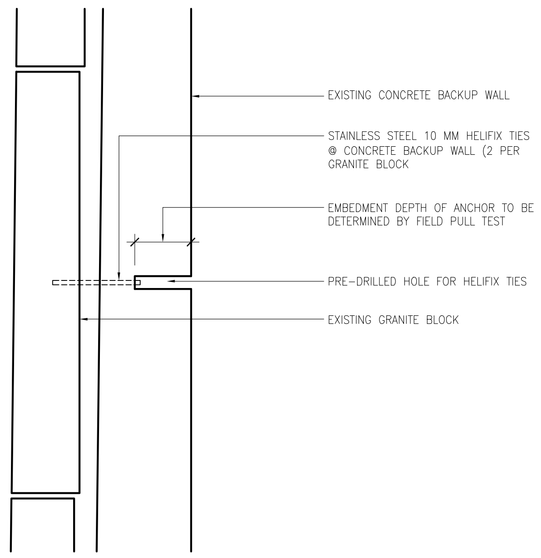

SECTION DETAIL - GRANITE BLOCK ANCHOR AT EXTERIOR FACADE 1 1/2"=1'-0" 5

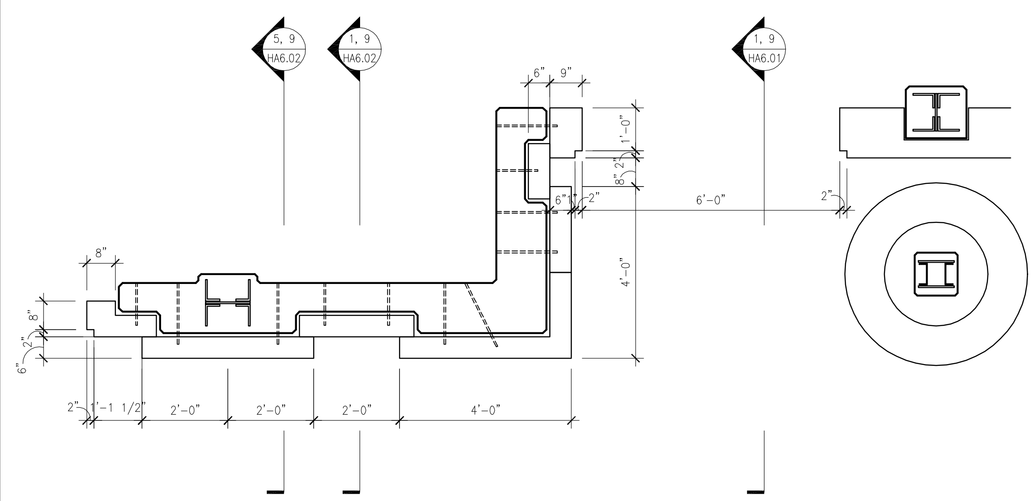

PLAN DETAIL (11TH-13TH FLOORS) 1/2"=1'-0" 1

NADEL
Architects Inc.

1990 So. Bundy Dr.
Fourth Floor
Los Angeles, CA 90025

T. 310.826.2100
F. 310.826.0182

www.nadelarc.com

CONSULTANT

NAKADA & ASSOCIATES

HISTORIC PRESERVATION ARCHITECT

COUNTY OF LOS ANGELES
THE HALL OF JUSTICE
STRUCTURAL RETROFIT PHASE

REVISIONS

DRAWING TITLE

STONE REHABILITATOIN AND ANCHOR DETAILS

SCALE : VARIES
DATE :
JOB NO :
SHEET NO.

HA6.04

SCOPING DOCUMENTS 100% SUBMISSION AUGUST 2010

ALL DRAWINGS AND WRITTEN MATERIAL APPEARING HEREIN CONSTITUTE THE ORIGINAL AND UNPUBLISHED WORK OF THE ARCHITECT AND THE SAME MAY NOT BE DUPLICATED, USED OR DISCLOSED WITHOUT THE WRITTEN CONSENT OF THE ARCHITECT. COPYRIGHT: NADEL ARCHITECTS INC. ALL RIGHTS RESERVED.

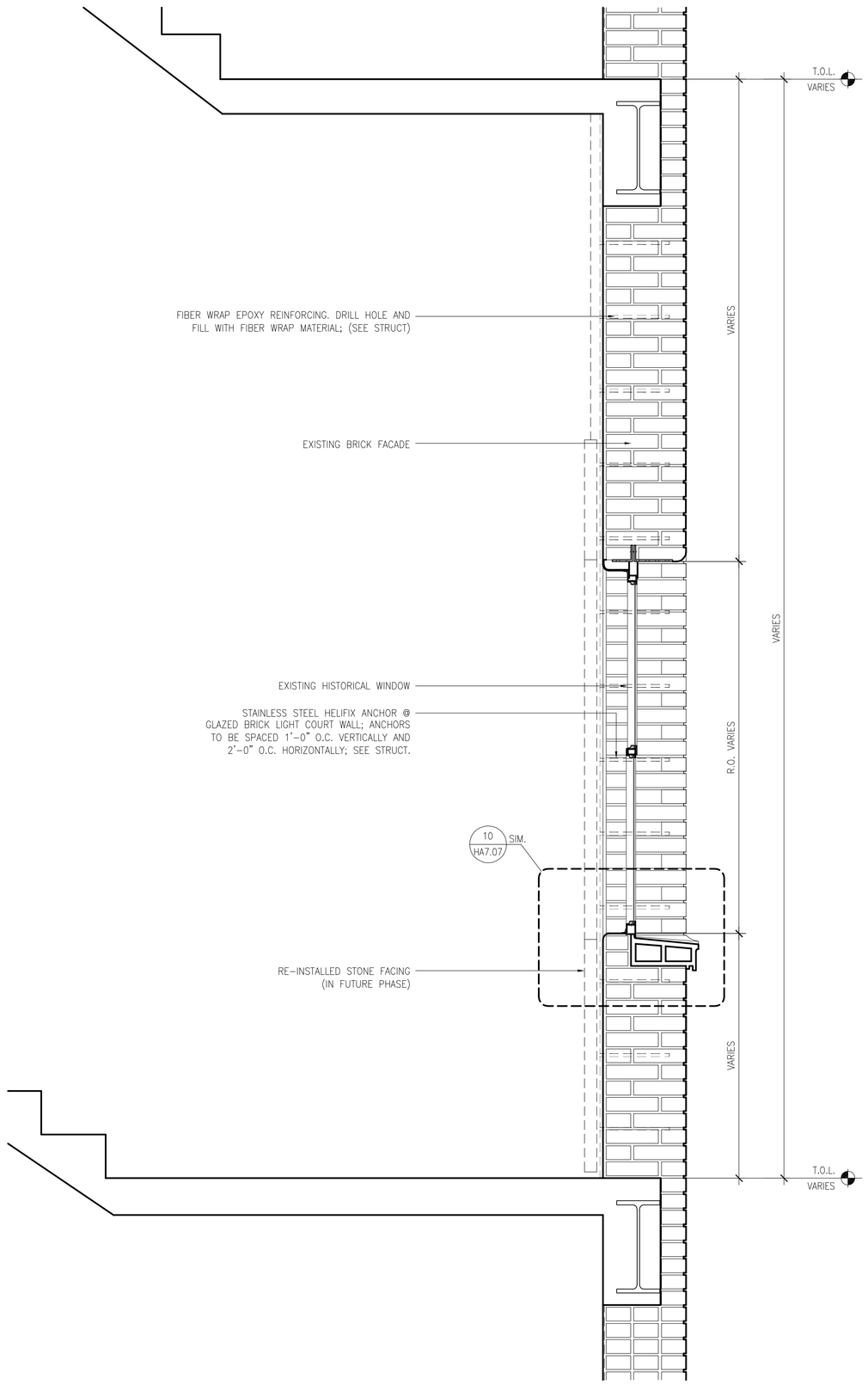

TYPICAL. LIGHT COURT WALL SECTION AT STAIR | 1"=1'-0" | 10

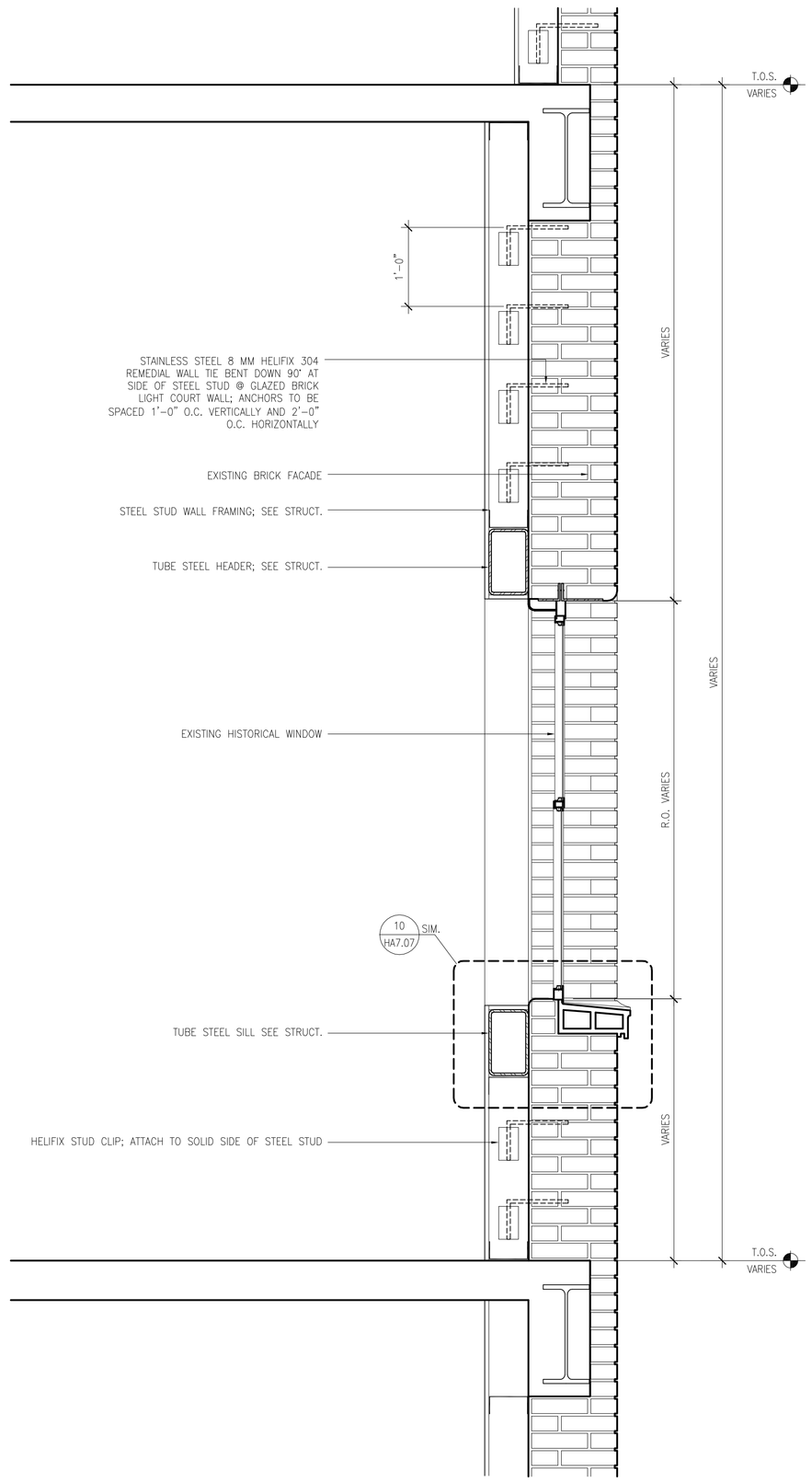

TYPICAL LIGHT COURT WALL SECTION AT WINDOW (FLOORS 1-9) | 1"=1'-0" | 6

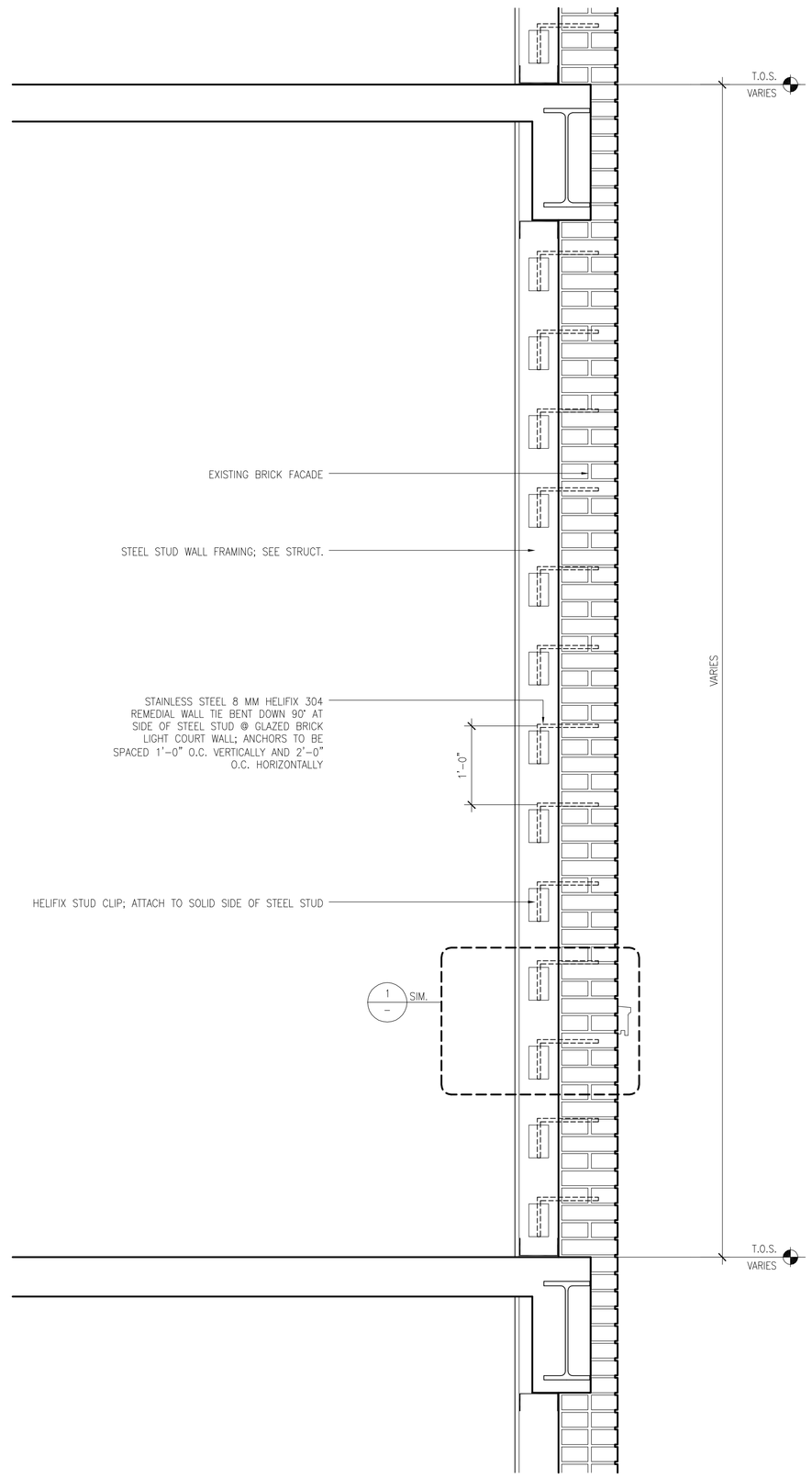

TYPICAL LIGHT COURT WALL SECTION (FLOORS 10-14) | 1"=1'-0" | 2

1/2"=1'-0" | 9

1/2"=1'-0" | 5

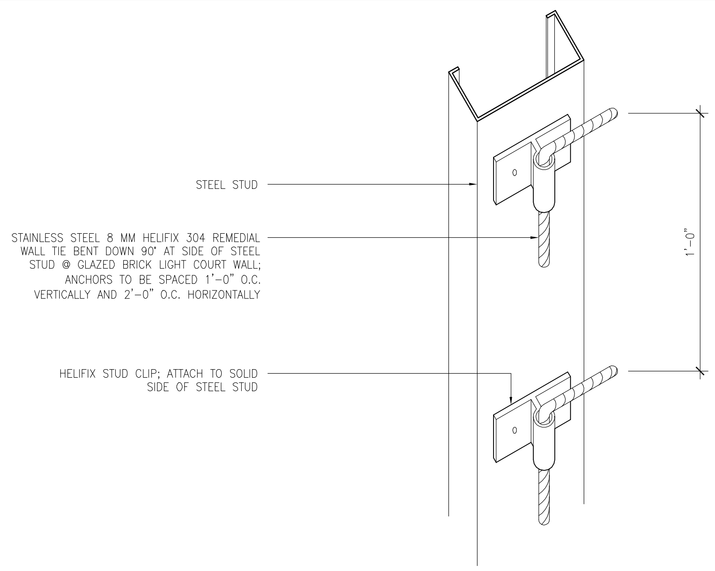

AXONOMETRIC DETAIL @ LIGHT COURT WALL | 3"=1'-0" | 1

NADEL
Architects Inc.

1990 So. Bundy Dr.
Fourth Floor
Los Angeles, CA 90025

T. 310.826.2100
F. 310.826.0182

www.nadelarc.com

CONSULTANT

NAKADA & ASSOCIATES

HISTORIC PRESERVATION ARCHITECT

COUNTY OF LOS ANGELES
THE HALL OF JUSTICE
STRUCTURAL RETROFIT PHASE

REVISIONS

1	
2	
3	
4	
5	
6	

DRAWING TITLE

LIGHT COURT REHABILITATION AND ANCHOR DETAILS

SCALE : VARIES
DATE :
JOB NO :
SHEET NO.

HA6.05

SCOPING DOCUMENTS 100% SUBMISSION AUGUST 2010

ALL DRAWINGS AND WRITTEN MATERIAL APPEARING HEREIN CONSTITUTE THE ORIGINAL AND UNPUBLISHED WORK OF THE ARCHITECT AND THE SAME MAY NOT BE DUPLICATED, USED OR DISCLOSED WITHOUT THE WRITTEN CONSENT OF THE ARCHITECT. COPYRIGHT: NADEL ARCHITECTS INC. ALL RIGHTS RESERVED.

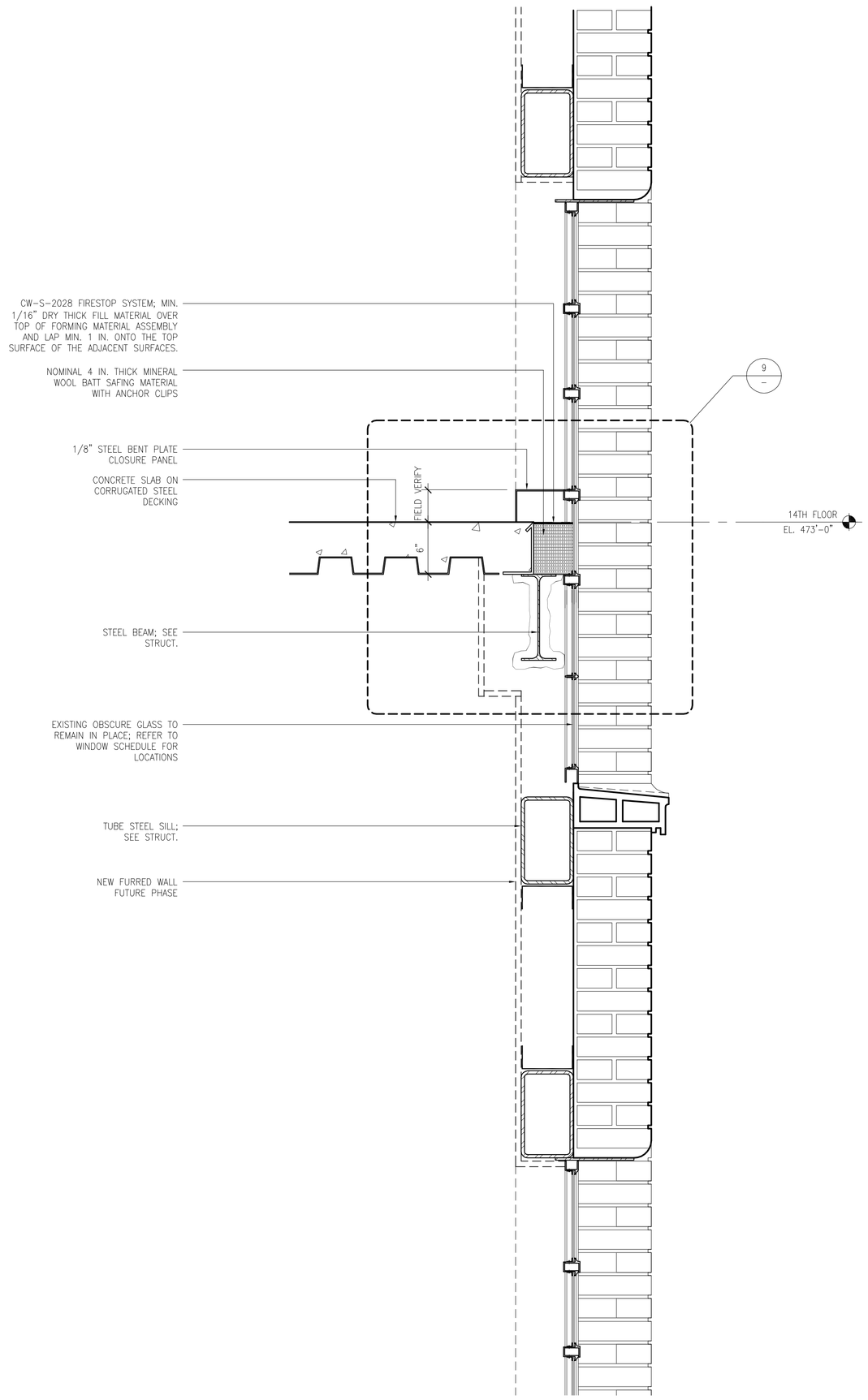

NOTE: SECTION OCCURS AT WINDOW 36

SPANDREL DETAIL AT EXISTING WINDOW | 1 1/2"=1'-0" | 10

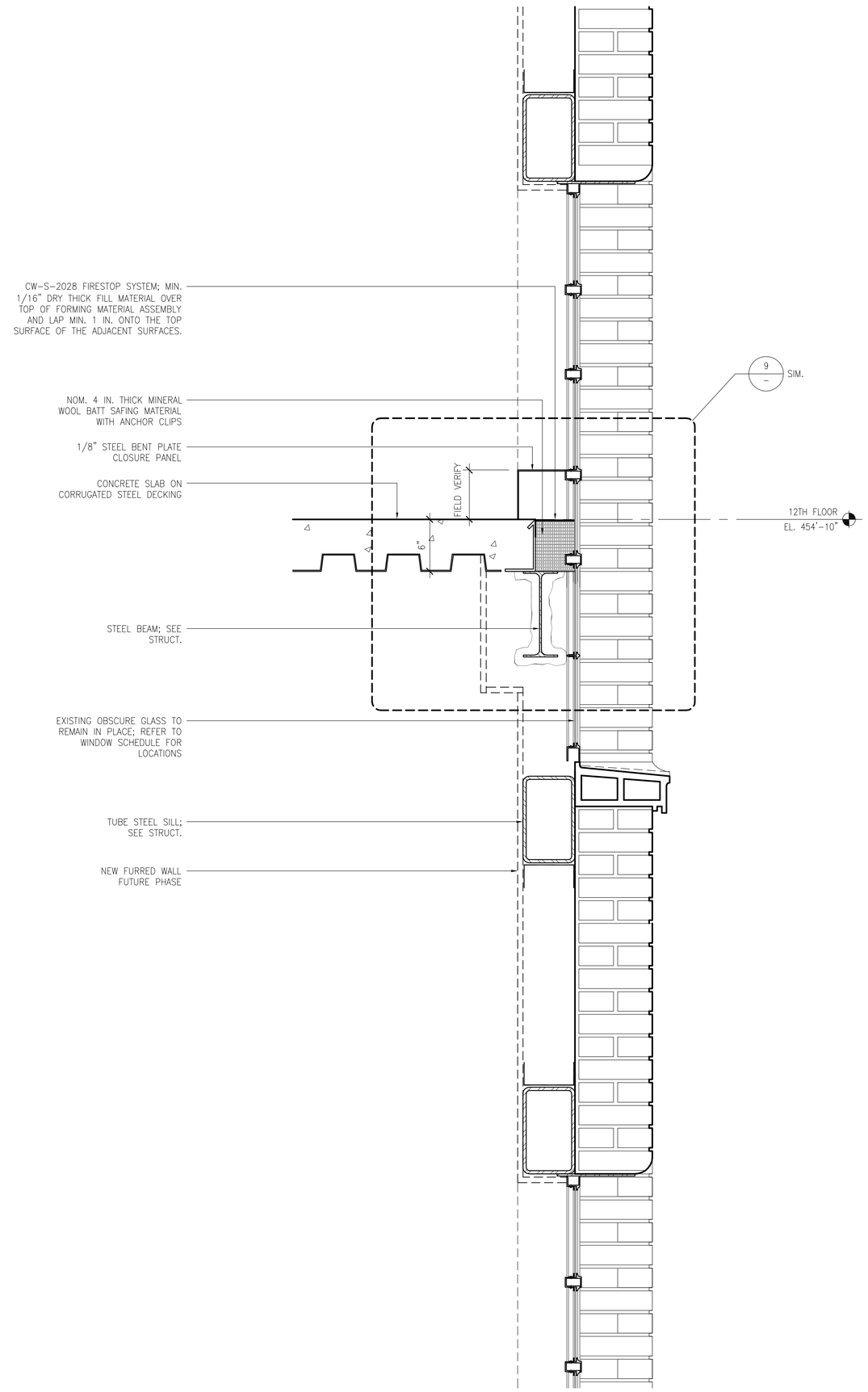

NOTE: SECTION OCCURS AT WINDOW 169

SPANDREL DETAIL AT EXISTING WINDOW | 1 1/2"=1'-0" | 6

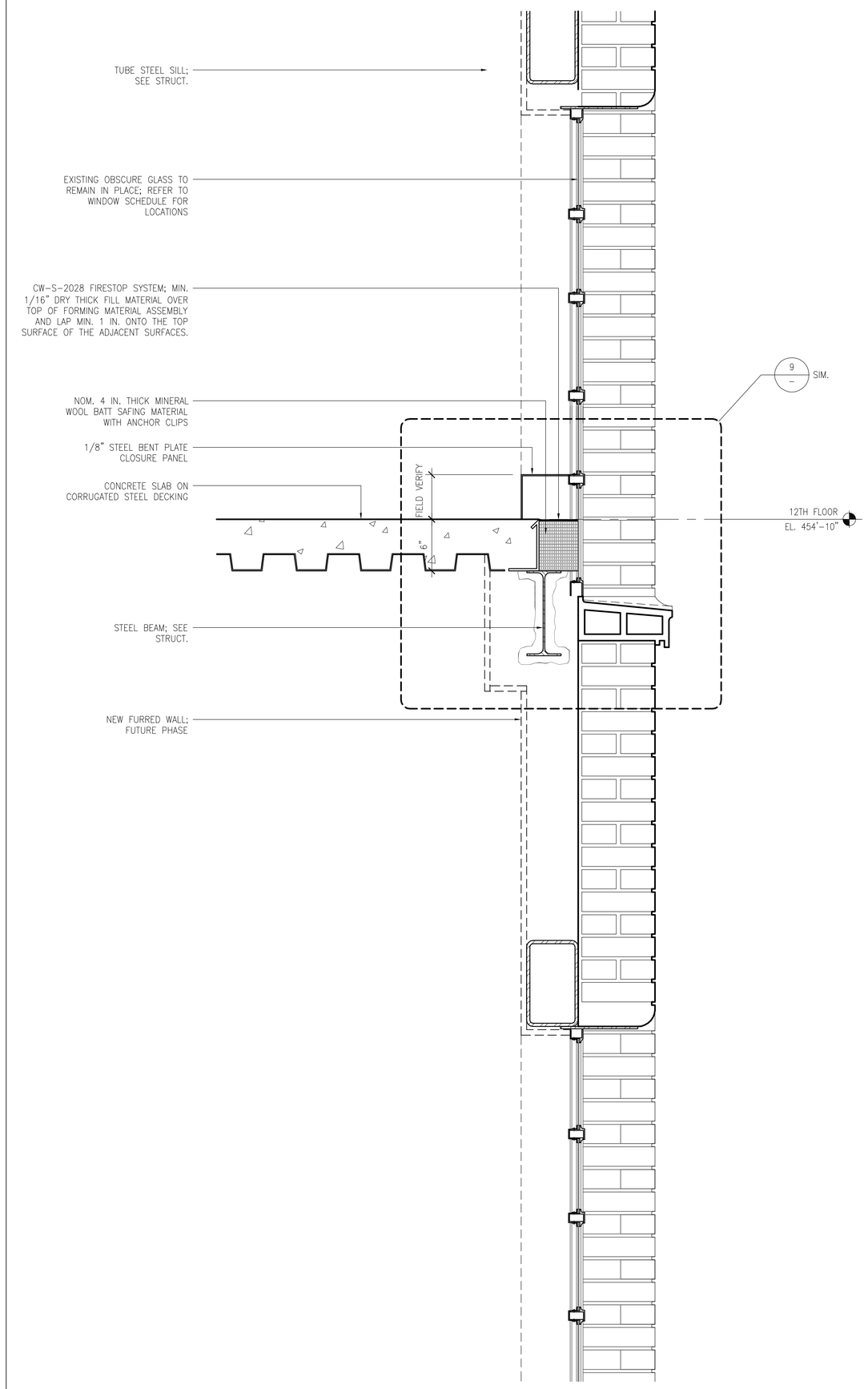

NOTE: SECTION OCCURS AT WINDOW 278 279

SPANDREL DETAIL AT EXISTING WINDOW | 1 1/2"=1'-0" | 2

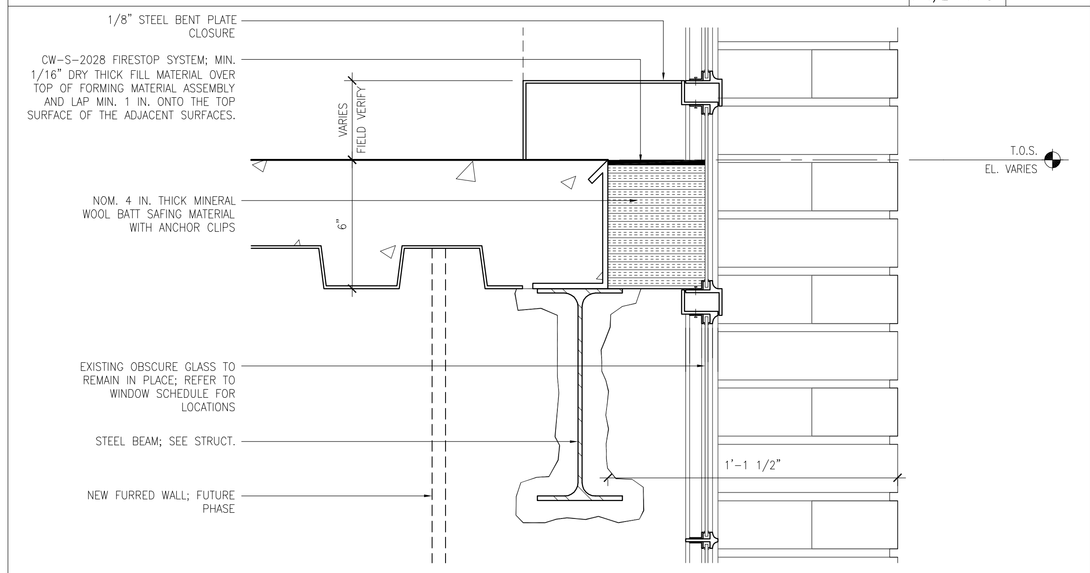

SPANDREL DETAIL AT EXISTING WINDOW | 3"=1'-0" | 9

\- | 3"=1'-0" | 5

\- | 3"=1'-0" | 1

NADEL Architects Inc.
1990 So. Bundy Dr.
Fourth Floor
Los Angeles, CA 90025
T. 310.826.2100
F. 310.826.0182
www.nadelarc.com

CONSULTANT
NAKADA & ASSOCIATES
HISTORIC PRESERVATION ARCHITECT

COUNTY OF LOS ANGELES
THE HALL OF JUSTICE
STRUCTURAL RETROFIT PHASE

REVISIONS

DRAWING TITLE
LIGHT COURT REHABILITATION AND ANCHOR DETAILS

SCOPING DOCUMENTS 100% SUBMISSION AUGUST 2010

SCALE : VARIES
DATE :
JOB NO :
SHEET NO.
HA6.06

ALL DRAWINGS AND WRITTEN MATERIAL APPEARING HEREIN CONSTITUTE THE ORIGINAL AND UNPUBLISHED WORK OF THE ARCHITECT AND THE SAME MAY NOT BE DUPLICATED, USED OR DISCLOSED WITHOUT THE WRITTEN CONSENT OF THE ARCHITECT. COPYRIGHT: NADEL ARCHITECTS INC. ALL RIGHTS RESERVED.

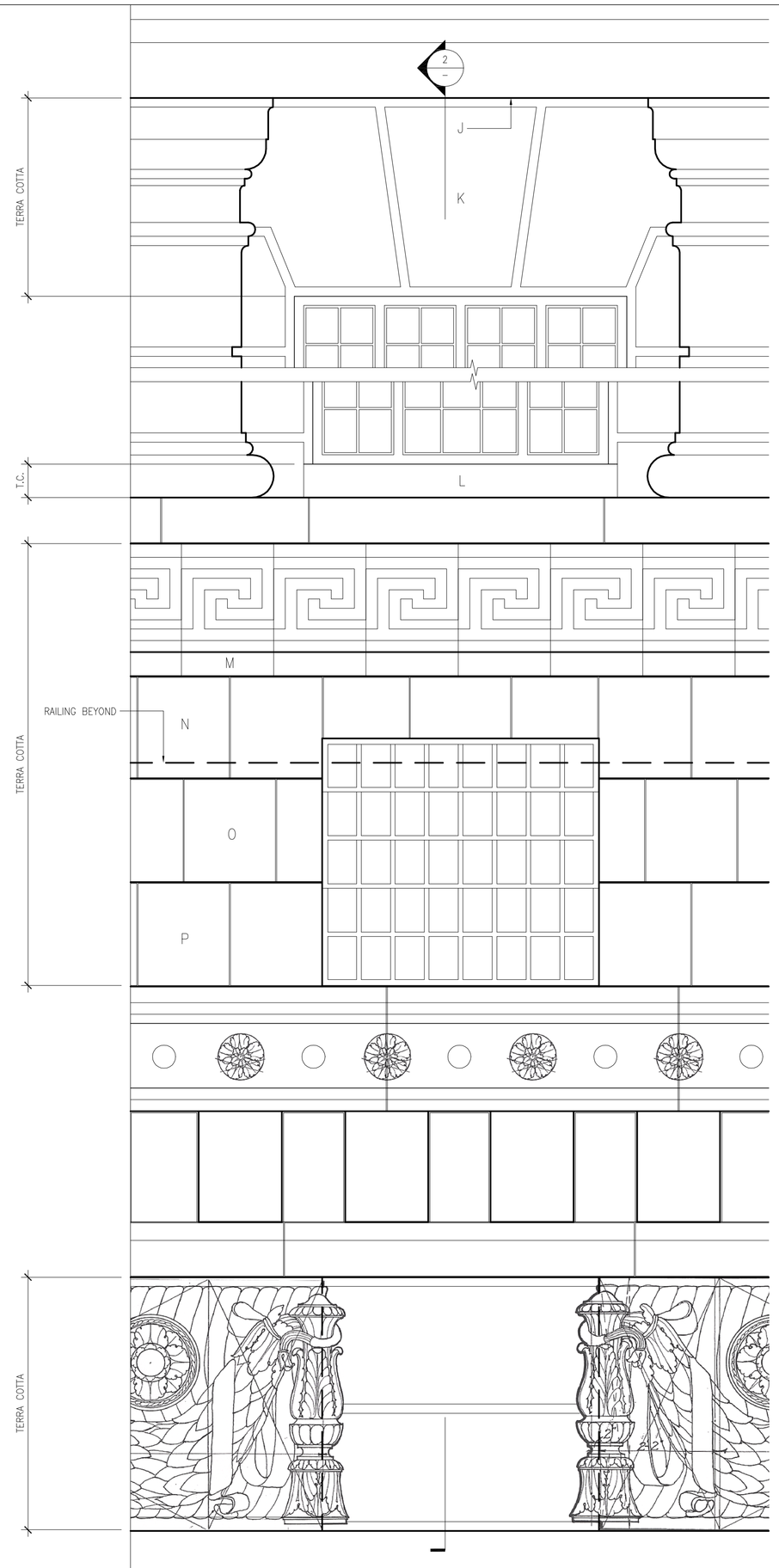

ELEVATION DETAIL @ BALLUSTRADE — 3/4"=1'-0" — 6

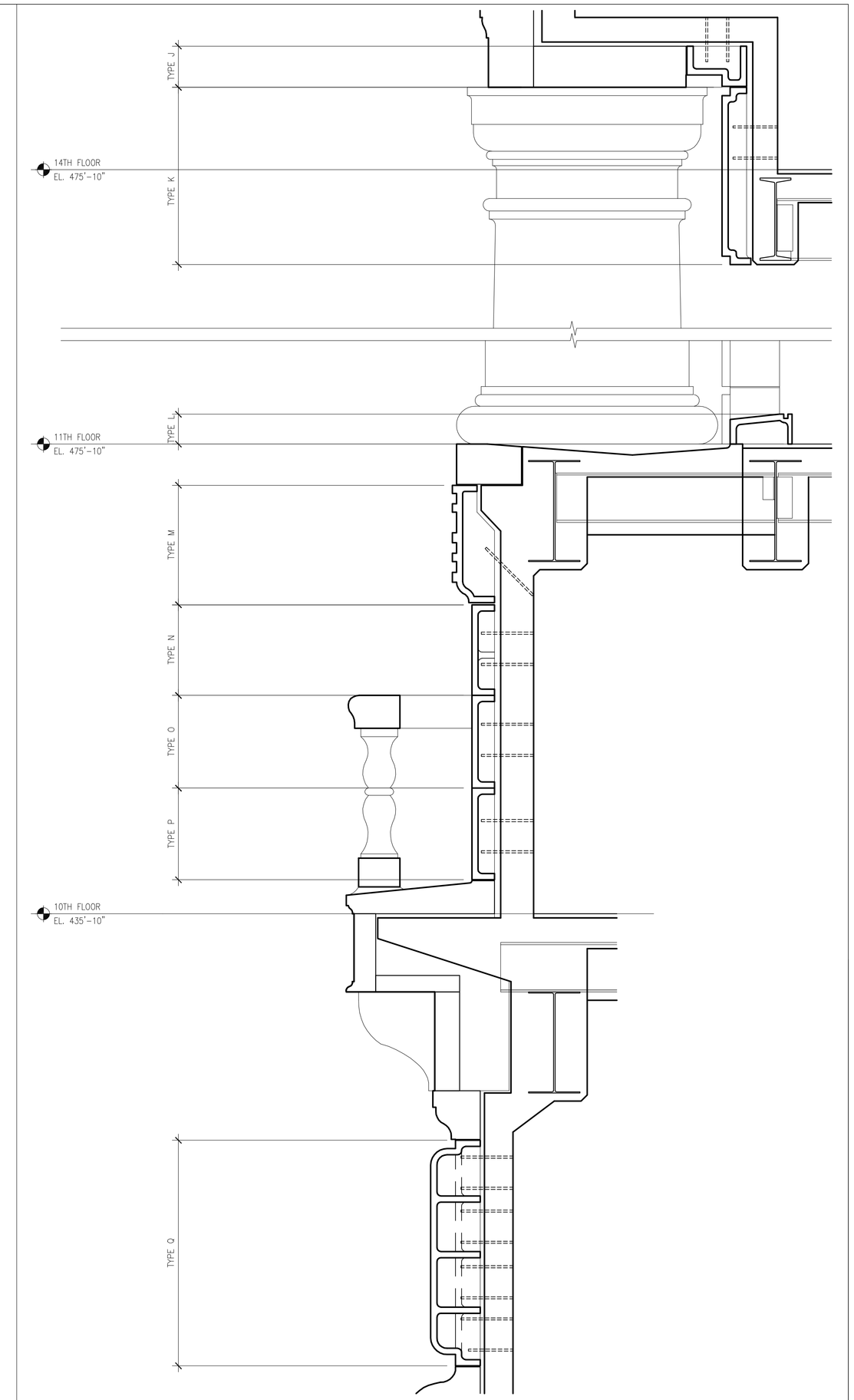

SECTION DETAIL @ BALLUSTRADE — 3/4"=1'-0" — 2

-

1/2"=1'-0" 10

-

1/2"=1'-0" 9

-

1/2"=1'-0" 5

-

1/2"=1'-0" 1

NADEL
Architects Inc.

1990 So. Bundy Dr.
Fourth Floor
Los Angeles, CA 90025

T. 310.826.2100
F. 310.826.0182

www.nadelarc.com

CONSULTANT

NAKADA
&
ASSOCIATES

HISTORIC PRESERVATION ARCHITECT

COUNTY OF LOS ANGELES

THE HALL OF JUSTICE

STRUCTURAL RETROFIT PHASE

REVISIONS

1	
2	
3	
4	
5	
6	

DRAWING TITLE

BALLUSTRADE ANCHOR DETAILS

SCALE : 3/4"=1'-0"
DATE :
JOB NO :
SHEET NO.

HA6.07

SCOPING DOCUMENTS 100% SUBMISSION AUGUST 2010

ALL DRAWINGS AND WRITTEN MATERIAL APPEARING HEREIN CONSTITUTE THE ORIGINAL AND UNPUBLISHED WORK OF THE ARCHITECT AND THE SAME MAY NOT BE DUPLICATED, USED OR DISCLOSED WITHOUT THE WRITTEN CONSENT OF THE ARCHITECT. COPYRIGHT: NADEL ARCHITECTS INC. ALL RIGHTS RESERVED.

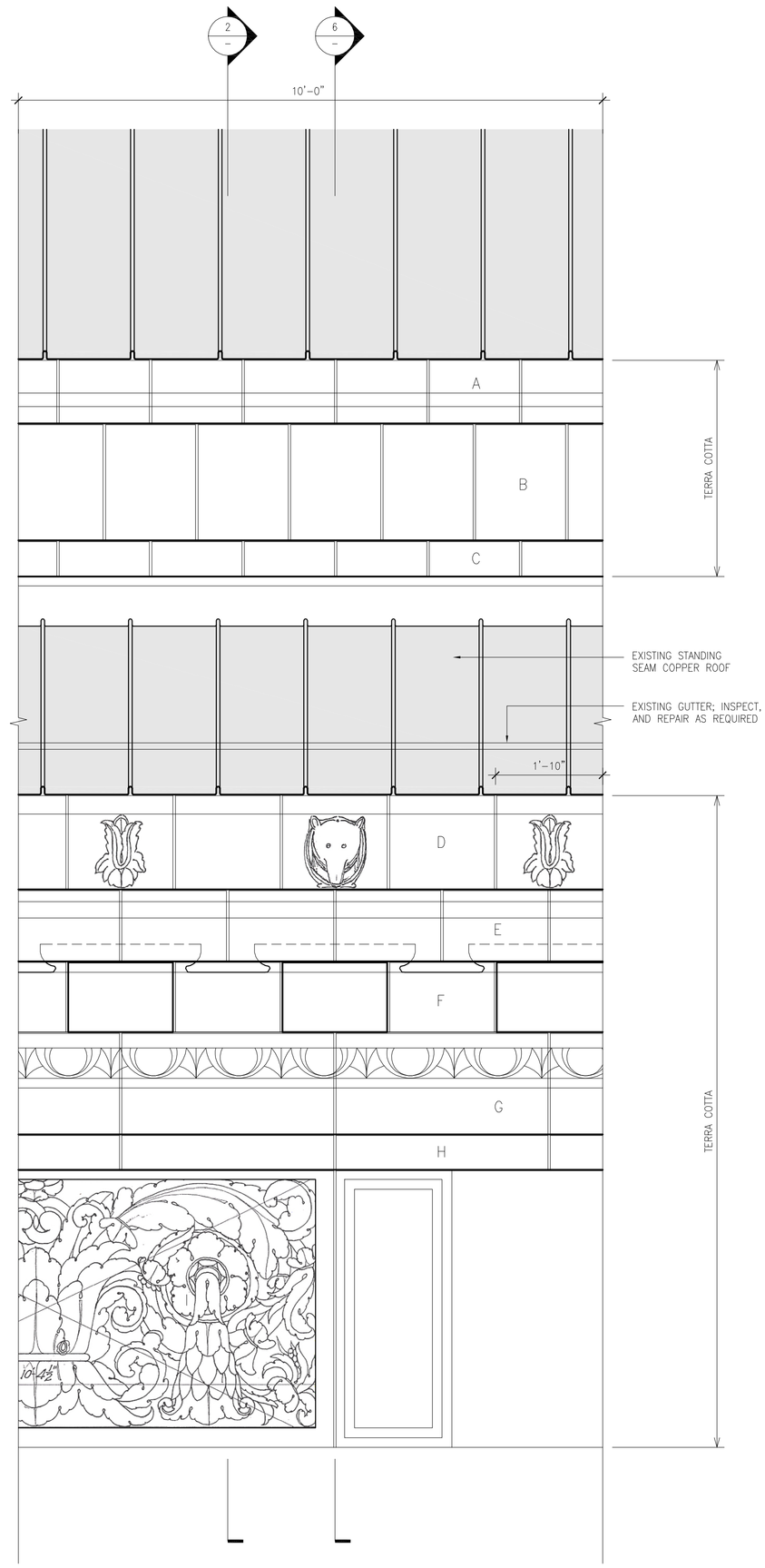

ELEVATION DETAIL @ CORNICE — 3/4"=1'-0" — 10

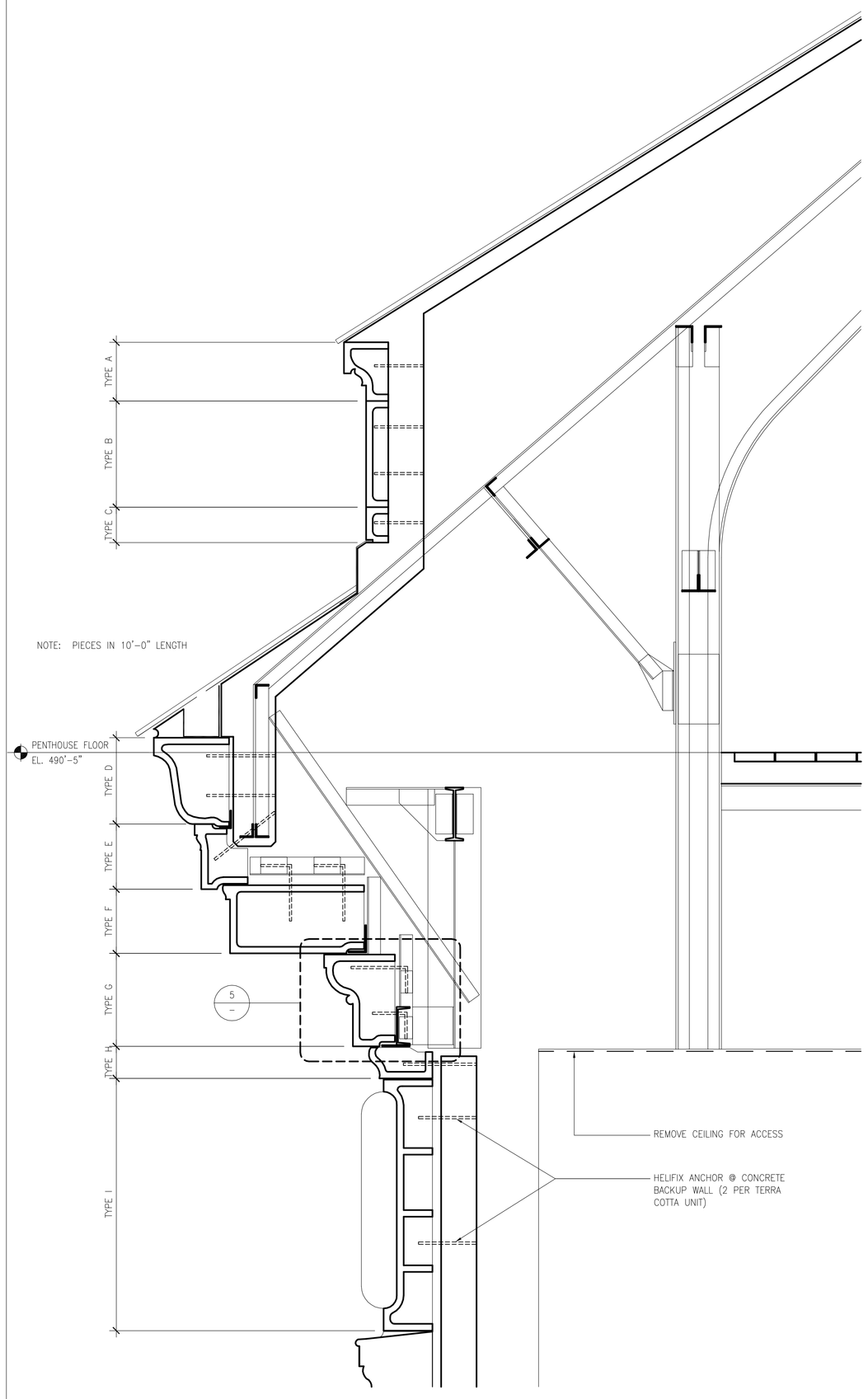

SECTION DETAIL @ CORNICE — 3/4"=1'-0" — 6

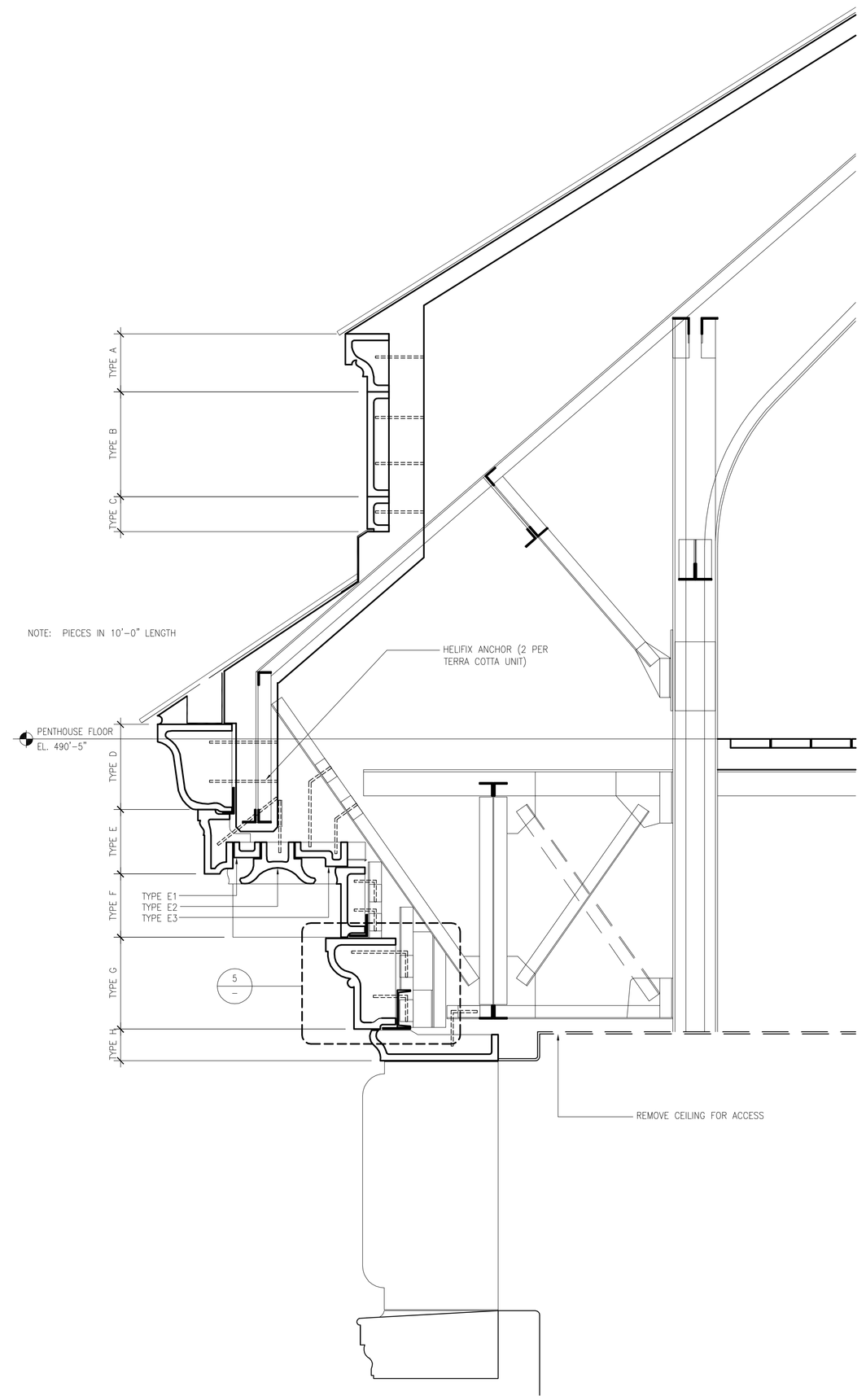

SECTION DETAIL @ CORNICE — 3/4"=1'-0" — 2

PLAN DETAIL — 1/2"=1'-0" — 9

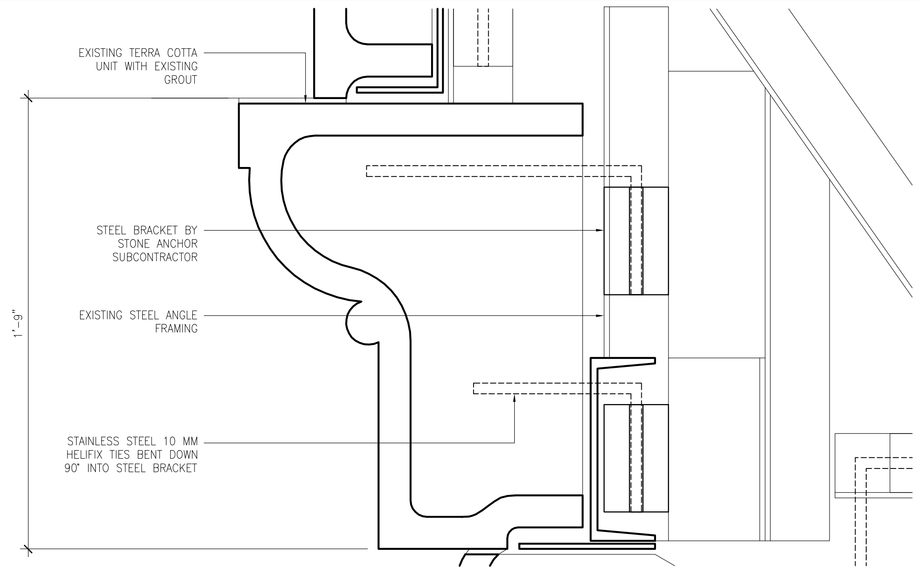

SECTION DETAIL - TERRA COTTA UNIT ANCHOR @ STEEL FRAMING — 3"=1'-0" — 5

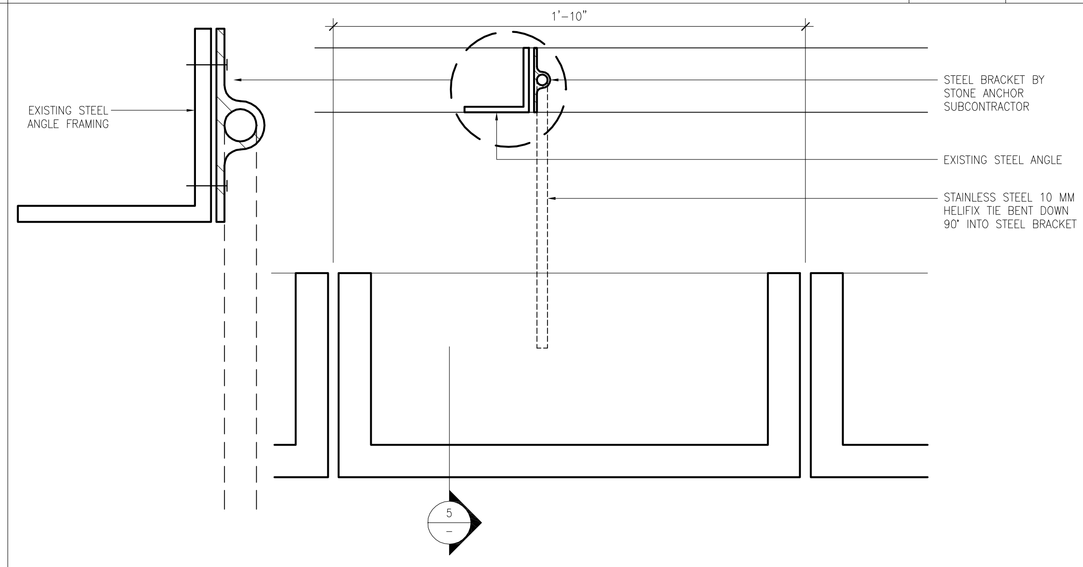

PLAN DETAIL - TERRA COTTA UNIT ANCHOR @ STEEL FRAMING — 3"=1'-0" — 1

NADEL
Architects Inc.

1990 So. Bundy Dr.
Fourth Floor
Los Angeles, CA 90025

T. 310.826.2100
F. 310.826.0182

www.nadelarc.com

CONSULTANT

NAKADA + ASSOCIATES

HISTORIC PRESERVATION ARCHITECT

COUNTY OF LOS ANGELES

THE HALL OF JUSTICE

STRUCTURAL RETROFIT PHASE

REVISIONS

1	
2	
3	
4	
5	
6	

DRAWING TITLE

TERRA COTTA CORNICE ANCHOR DETAILS

SCOPING DOCUMENTS — 100% SUBMISSION — AUGUST 2010

SCALE : VARIES

DATE :

JOB NO :

SHEET NO.

HA6.08

ALL DRAWINGS AND WRITTEN MATERIAL APPEARING HEREIN CONSTITUTE THE ORIGINAL AND UNPUBLISHED WORK OF THE ARCHITECT AND THE SAME MAY NOT BE DUPLICATED, USED OR DISCLOSED WITHOUT THE WRITTEN CONSENT OF THE ARCHITECT. COPYRIGHT: NADEL ARCHITECTS INC. ALL RIGHTS RESERVED.

HALL OF JUSTICE WINDOW REHABILITATION SCHEDULE

NUMBER	FLOOR	TYPE	GLAZING TYPE	NUMBER OF PANES	NUMBER OF PANES TO BE REPLACED	NOTES
EXTERIOR FACADE						
101	1	L1	CL	2	–	–
102	1	L	CL	2	–	–
103	1	L	CL	2	–	–
104	1	L	CL	2	–	–
105	1	L	CL	2	–	–
106	1	L	CL	2	–	–
107	1	L	CL	2	–	–
108	1	L	CL	2	–	–
109	1	L	CL	2	–	–
110	1	L	CL	2	–	–
111	1	L	CL	2	–	–
112	1	L1	CL	2	–	–
113	1	L	CL	2	–	–
114	1	L	CL	2	–	–
115	1	L	CL	2	–	–
116	1	L	CL	2	–	–
117	1	L1	CL	2	–	–
118	1	L1	CL	2	–	–
119	1	L	CL	2	1	–
120	1	L	CL	2	2	1, 5
121	1	L	CL	2	2	1, 5
122	1	L	CL	2	–	–
123	1	L	CL	2	–	–
124	1	L	CL	2	2	1, 5
125	1	L	CL	2	2	1, 5
127	1	Q	W	15	6	3
128	1	Q	W	15	6	3
129	1	Q	W	15	–	3
130	1	R	W	9	3	7
131	1	Q	O	15	–	–
132	1	Q	W	15	–	–
133	1	Q	W	15	13	3
134	1	Q	W	15	3	1
135	1	V	W	10	3	3
136	1	S	W	6	6	8
137	1	Q	W	15	4	3
138	1	Q	W	15	–	–
139	1	Q	W	15	8	3
140	1	Q	W	15	2	3
141	1	Q	W	15	5	3
142	1	V	W	10	–	–
143	1	V	W	10	–	–
144	1	V	W	10	3	3
145	1	V	W	10	–	–
146	1	V	W	10	2	3
147	1	V	W	10	3	3
148	1	Y	OB	30	30	7
149	1	Y	OB	30	30	7
150	1	Y	OB	30	30	7
151	1	Y	OB	30	30	7
152	1	V	W	10	–	–
153	1	S	OB	6	6	7
154	1	U	W	5	–	–
155	1	Q	W	15	15	1, 5
156	1	Q	W	15	1	1, 5
157	1	Q	W	15	–	–
158	1	Q	W	15	–	–
159	1	Q	W	15	–	–
160	1	Q	W	15	–	–
161	1	Q	W	15	–	–
162	1	Q	W	15	–	–
163	1	V	OB	10	–	–
164	1	V	OB	10	–	–
165	1	V	OB	10	–	–
166	1	V	OB	10	–	–
167	1	V	OB	10	–	–
168	1	V	OB	10	–	–
169	1	V	OB	10	–	–
170	1	V	OB	10	–	–
–	–	–	–	–	–	–
INTERIOR LIGHT COURT						
201	2	K1	CL	2	–	–
202	2	K	CL	2	–	–
203	2	K	CL	2	–	–
204	2	K	CL	2	–	–
205	2	K	CL	2	–	–
206	2	K	CL	2	–	–
207	2	K	CL	2	–	–
208	2	K	CL	2	–	–
209	2	K	CL	2	–	–
210	2	K	CL	2	–	–
211	2	K	CL	2	–	–
212	2	K1	CL	2	2	1
213	2	K1	CL / W	2	1	–
214	2	K	CL	2	–	–
215	2	K	CL	2	2	1
216	2	K	CL	2	–	–
217	2	K	CL	2	2	–
218	2	K	CL	2	–	–
219	2	K	CL	2	–	–
220	2	K	CL	2	–	–
221	2	K	CL	2	–	–
222	2	K	CL	2	–	–
223	2	K1	CL	2	–	–
224	2	K1	CL	2	–	–
225	2	K	CL	2	2	2
226	2	K	CL	2	2	2
227	2	K	CL	2	2	2
228	2	K	CL	2	2	2
229	2	K	CL	2	2	2
230	2	K	CL	2	2	2
231	2	K	OB	2	2	2
232	2	K	OB	2	2	2
233	2	K	CL / OB	2	1	1
234	2	K	CL / OB	2	1	1
235	2	K	CL / OB	2	1	1
236	2	K	CL / OB	2	1	1
237	2	K1	W	2	–	–
238	2	K1	CL	2	2	–
239	2	K	CL	2	–	–
EXTERIOR FACADE						
240	2	K	CL	2	–	–
241	2	K	CL	2	–	–
242	2	K	CL	2	–	–
243	2	K	CL	2	–	–
244	2	K	CL	2	–	–
245	2	K	CL	2	–	–
246	2	K	CL	2	–	–
247	2	K	CL	2	–	–
248	2	K	CL	2	–	–
249	2	K	CL	2	–	–
250	2	K1	CL	2	–	–
251	2	Q	W	15	–	–
252	2	Q	O	15	–	–
253	2	Q	O	15	–	–
254	2	S	O	15	–	–
255	2	W	W	30	–	–
256	2	W	W	30	–	–
257	2	W	W	30	–	–
258	2	W	CO	30	–	–
259	2	W	W	15	–	–
260	2	W	W	15	–	–
261	2	S	O	6	–	–
262	2	R	W	9	–	–
263	2	S	W	6	–	–
264	2	Q	W	15	2	3
265	2	Q	W	15	1	3
266	2	Q	W	15	6	3
267	2	Q	W	15	–	–
268	2	T	W	16	–	–
269	2	T	W	16	–	–
270	2	T	W	16	–	–
271	2	T	W	16	–	–
272	2	T	W	16	–	–
273	2	S	OB	6	–	–
274	2	Q	W	15	–	–
275	2	Q	W	15	–	–
276	2	Q	W	15	–	–
277	2	Q	W	15	–	–
278	2	Q	W	15	–	–
279	2	Q	W	15	–	–
280	2	Q	W	15	–	–
281	2	Q	W	15	–	–
282	2	Q	W	15	–	–
283	2	Q	W	15	–	–
284	2	Q	W	15	–	–
285	2	Q	OB	15	–	–
286	2	Q	OB	15	–	–
287	2	T	W	16	–	–
288	2	Q	OB	15	–	–
289	2	Q	OB	15	–	–
290	2	Q	OB	15	–	–
291	2	Q	OB	15	–	–
292	2	Q	OB	15	–	–
293	2	Z	CL	2	–	–
294	2	Z	CL	2	–	–
295	2	S	W	6	–	–
296	2	K	B	–	–	–
297	2	K	B	–	–	–
EXTERIOR FACADE						
301	3	J1	CL	2	–	–
302	3	J	CL	2	–	–
303	3	J	CL	2	–	–
304	3	J	CL	2	–	–
305	3	J	CL	2	–	–
306	3	J	CL	2	–	–
307	3	J	CL	2	–	–
308	3	J	CL	2	–	–
309	3	J	CL	2	–	–
310	3	J	CL	2	–	–
311	3	J	CL	2	–	–
312	3	J	CL	2	–	–
313	3	J	CL	2	–	–
314	3	J	CL	2	–	–
315	3	J	CL	2	–	–
316	3	J	CL	2	–	–
317	3	J	CL	2	–	–
318	3	J1	CL	2	–	–
319	3	J1	CL	2	–	–
320	3	J	CL	2	–	–
321	3	J	CL	2	–	–
322	3	J	CL	2	–	–
323	3	J	CL	2	–	–
324	3	J	CL	2	–	–
325	3	J	CL	2	–	–
326	3	J	CL	2	–	–
327	3	J	CL	2	–	–
328	3	J	CL	2	–	–
329	3	J	CL	2	–	–
330	3	J	CL	2	–	–
331	3	J1	CL	2	–	–
332	3	J1	CL	2	–	–
333	3	J	CL	2	–	–
334	3	J	CL	2	–	–
335	3	J	CL	2	–	–
336	3	J	CL	2	–	–
337	3	J	CL	2	–	–
338	3	J	CL	2	–	–
339	3	J	CL	2	–	–
340	3	J	CL	2	–	–
341	3	J	CL	2	–	–
342	3	J	CL	2	–	–
343	3	J	CL	2	–	–
344	3	J	CL	2	–	–
345	3	J	CL	2	–	–
346	3	J	CL	2	–	–
347	3	J1	CL	2	–	–
348	3	J1	CL	2	–	–
349	3	J	CL	2	–	–
350	3	J	CL	2	–	–
351	3	J	CL	2	–	–
EXTERIOR FACADE						
352	3	J	CL	2	–	–
353	3	J	CL	2	–	–
354	3	J	CL	2	–	–
355	3	J	CL	2	–	–
356	3	J	CL	2	–	–
357	3	J	CL	2	–	–
358	3	J	CL	2	–	–
359	3	J	CL	2	–	–
360	3	J1	CL	2	–	–
361	3	Q	W	15	–	–
362	3	Q	W	15	–	–
363	3	Q	W	15	–	–
364	3	S	W	15	–	–
365	3	Q	OB	30	–	–
366	3	R	W	6	–	–
367	3	Q	W	15	–	–
368	3	Q	W	15	–	–
369	3	Q	W	15	–	–
370	3	S	CL	30	–	–
371	3	R	W	15	–	–
372	3	S	W	15	–	–
373	3	Q	OB	6	–	–
374	3	Q	OB	6	–	–
375	3	Q	OB	6	–	–
376	3	X	W	15	–	–
377	3	X	W	15	–	–
378	3	X	W	15	–	–
379	3	X	W	16	–	–
380	3	X	W	16	–	–
381	3	X	W	16	–	–
382	3	X	W	16	–	–
383	3	S	OB	16	–	–
384	3	Q	W	16	–	–
385	3	Q	W	6	–	–
386	3	Q	W	15	–	–
387	3	Q	W	15	–	–
388	3	Q	W	15	–	–
389	3	Q	W	15	–	–
390	3	Q	W	15	–	–
391	3	Q	W	15	–	–
392	3	Q	W	15	–	–
393	3	Q	W	15	–	–
394	3	Q	W	15	–	–
395	3	Q	OB	15	–	–
396	3	Q	OB	15	–	–
397	3	Q	OB	15	–	–
398	3	Q	OB	15	–	–
399	3	Q	OB	15	–	–
3001	3	Q	OB	15	–	–
3002	3	Q	OB	15	–	–
3003	3	Q	OB	15	–	–
3004	3	J	B	15	–	–
3005	3	J	B	–	–	–
INTERIOR LIGHT COURT						
401	4	I1	CL	2	–	–
402	4	I	CL	2	–	–
403	4	I	CL	2	–	–
404	4	I	CL	2	–	–
405	4	I	CL	2	–	–
406	4	I	CL	2	–	–
407	4	I	CL	2	–	–
408	4	I	CL	2	–	–
409	4	I	CL	2	–	–
410	4	I	CL	2	–	–
411	4	I	CL	2	–	–
412	4	I	CL	2	–	–
413	4	I	CL	2	–	–
414	4	I	CL	2	–	–
415	4	I	CL	2	–	–
EXTERIOR FACADE						

NOTE: REFER TO SHEET HA7.04 FOR WINDOW REPAIR METHODOLOGY AND NOTES

ALL DRAWINGS AND WRITTEN MATERIAL APPEARING HEREIN CONSTITUTE THE ORIGINAL AND UNPUBLISHED WORK OF THE ARCHITECT AND THE SAME MAY NOT BE DUPLICATED, USED OR DISCLOSED WITHOUT THE WRITTEN CONSENT OF THE ARCHITECT. COPYRIGHT, NADEL ARCHITECTS INC. ALL RIGHTS RESERVED.

NADEL Architects Inc.
1990 So. Bundy Dr.
Fourth Floor
Los Angeles, CA 90025
T: 310.826.2100
F: 310.826.0182
www.nadelarc.com

CONSULTANT
NAKADA & ASSOCIATES
HISTORIC PRESERVATION ARCHITECT

COUNTY OF LOS ANGELES

THE HALL OF JUSTICE

STRUCTURAL RETROFIT PHASE

REVISIONS

DRAWING TITLE: **WINDOW SCHEDULE**

SCALE : NO SCALE
DATE :
JOB NO :
SHEET NO. **HA7.01**

SCOPING DOCUMENTS 100% SUBMISSION AUGUST 2010

HALL OF JUSTICE WINDOW REHABILITATION SCHEDULE

NUMBER	FLOOR	TYPE	GLAZING TYPE	NUMBER OF PANES	NUMBER OF PANES TO BE REPLACED	NOTES
416	4	I	CL	2	–	–
417	4	I	CL	2	–	–
418	4	I1	CL	2	–	–
419	4	I1	CL	2	–	–
420	4	I	CL	2	–	–
421	4	I	CL	2	1	–
422	4	I	CL	2	–	–
423	4	I	CL	2	–	–
424	4	I	CL	2	–	–
425	4	I	CL	2	–	–
426	4	I	CL	2	–	–
427	4	I	CL	2	–	–
428	4	I	CL	2	1	–
429	4	I	CL	2	–	–
430	4	I	CL	2	–	–
431	4	I1	CL	2	1	–
432	4	I1	CL	2	–	–
433	4	I	CL	2	–	–
434	4	I	CL	2	–	–
435	4	I	CL	2	1	–
436	4	I	CL	2	–	–
437	4	I	CL	2	–	–
438	4	I	CL	2	–	–
439	4	I	CL	2	–	–
440	4	I	CL	2	–	–
441	4	I	CL	2	–	–
442	4	I	CL	2	–	–
443	4	I	CL	2	–	–
444	4	I	CL	2	–	–
445	4	I	CL	2	–	–
446	4	I	CL	2	–	–
447	4	I	CL	2	–	–
448	4	I	CL	2	–	–
449	4	I1	CL	2	–	–
450	4	I1	CL	2	–	–
451	4	I	CL	2	–	–
452	4	I	CL	2	–	–
453	4	I	CL	2	–	–
454	4	I	CL	2	–	–
455	4	I	CL	2	–	–
456	4	I	CL	2	–	–
457	4	I	CL	2	–	–
458	4	I	CL	2	–	–
459	4	I	CL	2	–	–
460	4	I	CL	2	–	–
461	4	I	CL	2	1	–
462	4	I1	CL	2	–	–
463	4	Q	W	15	6	–
464	4	Q	W	15	6	–
465	4	Q	W	15	8	–
466	4	Q	OB	15	–	–
467	4	S	W	9	2	–
468	4	S	W	9	–	–
469	4	Q	W	15	–	–
470	4	Q	W	15	–	–
471	4	Q	W	15	–	–
472	4	Q	W	15	1	–
473	4	Q	W	15	2	–
474	4	S	OB	15	6	–
475	4	R	W	9	–	–
476	4	S	W	6	–	–
477	4	Q	W	15	3	–
478	4	Q	W	15	6	–
479	4	Q	W	15	6	–
480	4	Q	W	15	12	–
481	4	Q	W	15	8	–
482	4	S	OB	15	6	–
483	4	Q	W	15	–	–
484	4	Q	W	15	9	–
485	4	Q	W	15	2	–
486	4	Q	W	15	4	–
487	4	Q	W	15	–	–
488	4	Q	W	15	–	–
489	4	Q	W	15	–	–
490	4	Q	W	15	1	–
491	4	Q	W	15	–	–
492	4	Q	W	15	–	–
493	4	Q	W	15	2	–
494	4	Q	OB	15	–	–
495	4	Q	OB	15	–	–
496	4	Q	OB	15	–	–
497	4	Q	OB	15	–	–
498	4	Q	OB	15	–	–
499	4	Q	OB	15	–	–
4001	4	Q	OB	15	–	–
4002	4	Q	OB	15	–	–
4003	4	I	B	–	–	–
4004	4	I	B	–	–	–
EXT.	INTERIOR LIGHT COURT					
EXTERIOR FACADE						

NUMBER	FLOOR	TYPE	GLAZING TYPE	NUMBER OF PANES	NUMBER OF PANES TO BE REPLACED	NOTES
501	5	H1	CL	2	–	–
502	5	H	CL	2	–	–
503	5	H	CL	2	–	–
504	5	H	CL	2	–	–
505	5	H	CL	2	–	–
506	5	H	CL	2	–	–
507	5	H	CL	2	–	–
508	5	H	CL	2	–	–
509	5	H	CL	2	–	–
510	5	H	CL	2	–	–
511	5	H	CL	2	–	–
512	5	H	CL	2	–	–
513	5	H	CL	2	–	–
514	5	H	CL	2	–	–
515	5	H	CL	2	–	–
516	5	H	CL	2	–	–
517	5	H	CL	2	–	–
518	5	H1	CL	2	–	–
519	5	H1	CL	2	–	–
520	5	H	CL	–	–	–
521	5	H	CL	2	–	–
EXT.	INTERIOR LIGHT COURT					
EXTERIOR FACADE						

NUMBER	FLOOR	TYPE	GLAZING TYPE	NUMBER OF PANES	NUMBER OF PANES TO BE REPLACED	NOTES
522	5	H	CL	2	–	–
523	5	H	CL	2	–	–
524	5	H	CL	2	–	–
525	5	H	CL	2	–	–
526	5	H	CL	2	–	–
527	5	H	CL	2	1	–
528	5	H	CL	2	–	–
529	5	H	CL	2	–	–
530	5	H	CL	2	–	–
531	5	H1	CL	2	–	–
532	5	H1	CL	2	–	–
533	5	H	CL	2	–	–
534	5	H	CL	2	–	–
535	5	H	CL	2	–	–
536	5	H	CL	2	–	–
537	5	H	CL	2	1	–
538	5	H	CL	2	–	–
539	5	H	CL	2	–	–
540	5	H	CL	2	–	–
541	5	H	CL	2	–	–
542	5	H	CL	2	–	–
543	5	H	CL	2	–	–
544	5	H	CL	2	–	–
545	5	H	CL	2	–	–
546	5	H	CL	2	–	–
547	5	H	CL	2	–	–
548	5	H	CL	2	–	–
549	5	H1	CL	2	–	–
550	5	H1	CL	2	–	–
551	5	H	CL	2	–	–
552	5	H	CL	2	–	–
553	5	H	CL	2	–	–
554	5	H	CL	2	–	–
555	5	H	CL	2	–	–
556	5	H	CL	2	–	–
557	5	H	CL	2	–	–
558	5	H	CL	2	–	–
559	5	H	CL	2	–	–
560	5	H	CL	2	–	–
561	5	H	CL	2	–	–
562	5	H1	CL	2	–	–
563	5	Q	W	15	–	–
564	5	Q	OB	15	–	–
565	5	Q	OB	15	–	–
566	5	S	W	6	–	–
567	5	Q	OB	15	1	–
568	5	R	W	9	–	–
569	5	S	W	6	–	–
570	5	Q	W	15	6	–
571	5	Q	W	15	8	–
572	5	Q	W	15	–	–
573	5	Q	W	15	2	–
574	5	Q	W	15	–	–
575	5	S	OB	6	6	–
576	5	R	W	9	–	–
577	5	S	W	6	–	–
578	5	Q	W	15	1	–
579	5	Q	W	15	2	–
580	5	Q	W	15	6	–
581	5	Q	W	15	–	–
582	5	Q	W	15	–	–
583	5	S	OB	6	–	–
584	5	Q	W	15	6	–
585	5	Q	W	15	6	–
586	5	Q	W	15	12	–
587	5	Q	W	15	8	–
588	5	Q	OB	15	6	–
589	5	Q	OB	15	–	–
590	5	Q	OB	15	9	–
591	5	Q	W	15	2	–
592	5	Q	OB	15	4	–
593	5	Q	OB	15	–	–
594	5	Q	W	15	–	–
595	5	Q	OB	15	–	–
596	5	Q	OB	15	1	–
597	5	Q	OB	15	–	–
598	5	Q	OB	15	–	–
599	5	Q	OB	15	2	–
5001	5	Q	OB	15	–	–
5002	5	Q	OB	15	–	–
5003	5	Q	OB	15	–	–
5004	5	H	B	–	–	–
5005	5	H	B	–	–	–
EXT.	INTERIOR LIGHT COURT					
EXTERIOR FACADE						

NUMBER	FLOOR	TYPE	GLAZING TYPE	NUMBER OF PANES	NUMBER OF PANES TO BE REPLACED	NOTES
601	6	H1	CL	2	–	–
602	6	H	CL	2	–	–
603	6	H	CL	2	–	–
604	6	H	CL	2	–	–
605	6	H	CL	2	–	–
606	6	H	CL	2	–	–
607	6	H	CL	2	–	–
608	6	H	CL	2	–	–
609	6	H	CL	2	–	–
610	6	H	CL	2	–	–
611	6	H	CL	2	–	–
612	6	H	CL	2	–	–
613	6	H	CL	2	–	–
614	6	H	CL	2	–	–
615	6	H	CL	2	–	–
616	6	H	CL	2	–	–
617	6	H	CL	2	–	–
618	6	H1	CL	2	–	–
619	6	H1	CL	2	–	–
620	6	H	CL	2	–	–
621	6	H	CL	2	–	–
622	6	H	CL	2	–	–
623	6	H	CL	2	–	–
624	6	H	CL	2	–	–
625	6	H	CL	2	–	–
626	6	H	CL	2	–	–
EXT.	INTERIOR LIGHT COURT					
EXTERIOR FACADE						

NUMBER	FLOOR	TYPE	GLAZING TYPE	NUMBER OF PANES	NUMBER OF PANES TO BE REPLACED	NOTES
627	6	H	CL	2	–	–
628	6	H	CL	2	–	–
629	6	H	CL	2	–	–
630	6	H	CL	2	–	–
631	6	H1	CL	2	–	–
632	6	H1	CL	2	–	–
633	6	H	CL	2	–	–
634	6	H	CL	2	–	–
635	6	H	CL	2	–	–
636	6	H	CL	2	–	–
637	6	H	CL	2	–	–
638	6	H	CL	2	–	–
639	6	H	CL	2	–	–
640	6	H	CL	2	–	–
641	6	H	CL	2	–	–
642	6	H	CL	2	–	–
643	6	H	CL	2	–	–
644	6	H	CL	2	–	–
645	6	H	CL	2	–	–
646	6	H	CL	2	–	–
647	6	H	CL	2	–	–
648	6	H	CL	2	–	–
649	6	H1	CL	2	–	–
650	6	H1	CL	2	–	–
651	6	H	CL	2	–	–
652	6	H	CL	2	–	–
653	6	H	CL	2	–	–
654	6	H	CL	2	–	–
655	6	H	CL	2	–	–
656	6	H	CL	2	–	–
657	6	H	CL	2	–	–
658	6	H	CL	2	–	–
659	6	H	CL	2	–	–
660	6	H	CL	2	–	–
661	6	H	CL	2	–	–
662	6	H1	CL	2	–	–
663	6	Q	W	15	–	–
664	6	Q	W	15	–	–
665	6	Q	OB	15	–	–
666	6	Q	OB	15	–	–
667	6	R	W	9	–	–
668	6	S	W	6	–	–
669	6	Q	W	15	–	–
670	6	Q	W	15	–	–
671	6	Q	W	15	–	–
672	6	Q	W	15	–	–
673	6	Q	OB	15	–	–
674	6	S	OB	15	–	–
675	6	R	W	9	–	–
676	6	S	W	6	–	–
677	6	Q	W	15	–	–
678	6	Q	W	15	–	–
679	6	Q	W	15	–	–
680	6	Q	W	15	–	–
681	6	Q	W	15	–	–
682	6	Q	W	15	–	–
683	6	Q	W	15	–	–
684	6	Q	W	15	–	–
685	6	Q	W	15	–	–
686	6	Q	W	15	–	–
687	6	Q	W	15	–	–
688	6	Q	W	15	–	–
689	6	Q	W	15	–	–
690	6	Q	OB	15	–	–
691	6	Q	OB	15	–	–
692	6	Q	W	15	–	–
693	6	Q	OB	15	–	–
694	6	Q	OB	15	–	–
695	6	Q	OB	15	–	–
696	6	Q	OB	15	–	–
697	6	Q	OB	15	–	–
698	6	Q	OB	15	–	–
699	6	Q	OB	15	–	–
6001	6	Q	OB	15	–	–
6002	6	H	B	2	–	–
6003	6	H	B	2	–	–
EXT.	INTERIOR LIGHT COURT					
EXTERIOR FACADE						

NOTE: REFER TO SHEET HA7.04 FOR WINDOW REPAIR METHODOLOGY AND NOTES

ALL DRAWINGS AND WRITTEN MATERIAL APPEARING HEREIN CONSTITUTE THE ORIGINAL AND UNPUBLISHED WORK OF THE ARCHITECT AND THE SAME MAY NOT BE DUPLICATED, USED OR DISCLOSED WITHOUT THE WRITTEN CONSENT OF THE ARCHITECT. COPYRIGHT, NADEL ARCHITECTS INC. ALL RIGHTS RESERVED.

NADEL Architects Inc.
1990 So. Bundy Dr.
Fourth Floor
Los Angeles, CA 90025
T. 310.826.2100
F. 310.826.0182
www.nadelarc.com

CONSULTANT
NAKADA & ASSOCIATES
HISTORIC PRESERVATION ARCHITECT

COUNTY OF LOS ANGELES
THE HALL OF JUSTICE
STRUCTURAL RETROFIT PHASE

REVISIONS
DRAWING TITLE: **WINDOW SCHEDULE**

SCALE : NO SCALE
DATE :
JOB NO :
SHEET NO. **HA7.02**

SCOPING DOCUMENTS 100% SUBMISSION AUGUST 2010

HALL OF JUSTICE WINDOW REHABILITATION SCHEDULE

NUMBER	FLOOR	TYPE	GLAZING TYPE	NUMBER OF PANES	NUMBER OF PANES TO BE REPLACED	NOTES
EXTERIOR ELEVATION						
801	8	F1	CL	2	–	–
802	8	F	CL	2	–	–
803	8	F	CL	2	–	–
804	8	F	CL	2	–	–
805	8	F	CL	2	–	–
806	8	F	CL	2	–	–
807	8	F	CL	2	–	–
EXT.						
7003	7	B	B	–	–	–
7002	7	B	B	–	–	–
7001	7	Q	OB	15	–	1
799	7	Q	OB	15	–	1
798	7	Q	OB	15	–	1
797	7	Q	OB	15	–	1
796	7	Q	OB	15	–	1
795	7	Q	OB	15	–	1
794	7	Q	OB	15	–	1
793	7	Q	W	15	–	1
792	7	Q	W	15	–	1
791	7	Q	W	15	–	1
790	7	Q	W	15	–	1
789	7	Q	W	15	–	1
788	7	Q	W	15	–	1
787	7	Q	W	15	–	1
786	7	Q	W	15	–	1
785	7	Q	W	15	–	1
784	7	Q	W	15	–	1
783	7	Q	W	15	–	1
782	7	Q	W	15	–	1
781	7	Q	W	15	–	1
780	7	Q	W	15	–	1
779	7	Q	W	15	–	1
778	7	Q	W	15	–	1
777	7	S	W	15	–	1
776	7	S	W	15	–	1
775	7	R	W	9	–	1
774	7	S	OB	48	48	3
773	7	Q	W	15	–	1
772	7	Q	W	15	–	1
771	7	Q	W	15	–	1
770	7	Q	W	15	–	1
769	7	Q	W	15	–	1
768	7	S	W	9	–	1
767	7	R	W	9	–	1
766	7	Q	OB	15	–	1
765	7	Q	W	15	–	1
764	7	Q	W	15	–	1
763	7	Q	W	15	–	1
762	7	G1	CL	2	–	1
761	7	G	CL	2	–	1
760	7	G	CL	2	–	1
759	7	G	CL	2	–	1
758	7	G	CL	2	–	1
757	7	G	CL	2	–	1
756	7	G	CL	2	–	1
755	7	G	CL	2	–	1
754	7	G	CL	2	–	1
753	7	G	CL	2	–	1
752	7	G	CL	2	–	1
751	7	G	CL	2	–	1
750	7	G1	CL	2	–	1
749	7	G1	CL	2	–	1
748	7	G	CL	2	–	1
747	7	G	CL	2	–	1
746	7	G	CL	2	–	1
745	7	G	CL	2	–	1
744	7	G	CL	2	–	1
743	7	G	CL	2	–	1
742	7	G	CL	2	–	1
741	7	G	CL	2	–	1
740	7	G	CL	2	–	1
739	7	G	CL	2	–	1
738	7	G	CL	2	–	1
737	7	G	CL	2	–	1
736	7	G	CL	2	–	1
735	7	G	CL	2	–	1
734	7	G	CL	2	–	1
733	7	G	CL	2	–	1
732	7	G1	CL	2	–	1
731	7	G	CL	2	–	1
730	7	G	CL	2	–	1
729	7	G	CL	2	–	1
728	7	G	CL	2	–	1
727	7	G	CL	2	–	1
726	7	G	CL	2	–	1
725	7	G	CL	2	–	1
724	7	G	CL	2	–	1
723	7	G	CL	2	–	1
722	7	G	CL	2	–	1
721	7	G	CL	2	–	1
720	7	G	CL	2	–	1
719	7	G1	CL	2	–	1
718	7	G	CL	2	–	1
717	7	G	CL	2	–	1
716	7	G	CL	2	–	1
715	7	G	CL	2	–	1
714	7	G	CL	2	–	1
713	7	G	CL	2	–	1
712	7	G	CL	2	–	1
711	7	G	CL	2	–	1
710	7	G	CL	2	–	1
709	7	G	CL	2	–	1
708	7	G	CL	2	–	1
707	7	G	CL	2	–	1
706	7	G	CL	2	–	1
705	7	G	CL	2	–	1
704	7	G	CL	2	–	1
703	7	G	CL	2	–	2
702	7	G	CL	2	–	1
701	7	G1	CL	2	–	1
INTERIOR LIGHT COURT						
807	8	F	CL	2	–	–
806	8	F	CL	2	–	–
805	8	F	CL	2	–	–
804	8	F	CL	2	–	–
803	8	F	CL	2	–	–
802	8	F	CL	2	–	–
801	8	F1	CL	2	–	–
EXT.						
914	9	E	CL	2	–	–
913	9	E	CL	2	–	–
912	9	E	CL	2	–	–
911	9	E	CL	2	–	–
910	9	E	CL	2	–	–
909	9	E	CL	2	–	–
908	9	E	CL	2	–	–
907	9	E	CL	2	–	–
906	9	E	CL	2	–	–
905	9	E	CL	2	–	–
904	9	E	CL	2	–	–
903	9	E	CL	2	–	–
902	9	E	CL	2	–	–
901	9	E1	CL	2	–	–
EXTERIOR ELEVATION						
8003	8	F	B	–	–	–
8002	8	F	B	–	–	–
8001	8	Q	OB	15	–	–
899	8	Q	OB	15	–	–
898	8	Q	OB	15	–	–
897	8	Q	OB	15	–	–
896	8	Q	OB	15	–	–
895	8	Q	OB	15	–	–
894	8	Q	OB	15	–	–
893	8	Q	W	15	–	–
892	8	Q	W	15	–	–
891	8	Q	W	15	–	–
890	8	Q	W	15	–	–
889	8	Q	W	15	–	–
888	8	Q	W	15	–	–
887	8	Q	W	15	–	–
886	8	Q	W	15	–	–
885	8	Q	W	15	–	–
884	8	Q	W	15	–	–
883	8	Q	W	15	–	–
882	8	Q	W	15	–	–
881	8	Q	W	15	–	–
880	8	Q	W	15	–	–
879	8	Q	W	15	–	–
878	8	Q	W	15	–	–
877	8	Q	W	15	–	–
876	8	R	W	9	–	–
875	8	S	W	9	–	–
874	8	S	OB	6	–	–
873	8	Q	W	15	–	–
872	8	Q	W	15	–	–
871	8	Q	OB	54	–	–
870	8	Q	W	15	–	–
869	8	R	W	9	–	–
868	8	Q	W	15	–	–
867	8	R	W	9	–	–
866	8	Q	W	15	–	–
865	8	Q	W	15	–	–
864	8	Q	W	15	–	–
863	8	F1	CL	2	–	–
862	8	F	CL	2	–	–
861	8	F	CL	2	–	–
860	8	F	CL	2	–	–
859	8	F	CL	2	–	–
858	8	F	CL	2	–	–
857	8	F	CL	2	–	–
856	8	F	CL	2	–	–
855	8	F	CL	2	–	–
854	8	F	CL	2	–	–
853	8	F	CL	2	–	–
852	8	F	CL	2	–	–
851	8	F	CL	2	–	–
850	8	F1	CL	2	–	–
849	8	F1	CL	2	–	–
848	8	F	CL	2	–	–
847	8	F	CL	2	–	–
846	8	F	CL	2	–	–
845	8	F	CL	2	–	–
844	8	F	CL	2	–	–
843	8	F	CL	2	–	–
842	8	F	CL	2	–	–
841	8	F	CL	2	–	–
840	8	F	CL	2	–	–
839	8	F	CL	2	–	–
838	8	F	CL	2	–	–
837	8	F	CL	2	–	–
836	8	F	CL	2	–	–
835	8	F	CL	2	–	–
834	8	F	CL	2	–	–
833	8	F1	CL	2	–	–
832	8	F1	CL	2	–	–
831	8	F1	CL	2	–	–
830	8	F	CL	2	–	–
829	8	F	CL	2	–	–
828	8	F	CL	2	–	–
827	8	F	CL	2	–	–
826	8	F	CL	2	–	–
825	8	F	CL	2	–	–
824	8	F	CL	2	–	–
823	8	F	CL	2	–	–
822	8	F	CL	2	–	–
821	8	F	CL	2	–	–
820	8	F	CL	2	–	–
819	8	F1	CL	2	–	–
818	8	F1	CL	2	–	–
817	8	F	CL	2	–	–
816	8	F	CL	2	–	–
815	8	F	CL	2	–	–
814	8	F	CL	2	–	–
813	8	F	CL	2	–	–
812	8	F	CL	2	–	–
811	8	F	CL	2	–	–
810	8	F	CL	2	–	–
809	8	F	CL	2	–	–
808	8	F	CL	2	–	–
EXTERIOR FACADE						

NUMBER	FLOOR	TYPE	GLAZING TYPE	NUMBER OF PANES	NUMBER OF PANES TO BE REPLACED	NOTES
EXTERIOR ELEVATION						
914	9	E	CL	2	–	–
913	9	E	CL	2	–	–
912	9	E	CL	2	–	–
911	9	E	CL	2	–	–
910	9	E	CL	2	–	–
909	9	E	CL	2	–	–
908	9	E	CL	2	–	–
907	9	E	CL	2	–	–
906	9	E	CL	2	–	–
905	9	E	CL	2	–	–
904	9	E	CL	2	–	–
903	9	E	CL	2	–	–
902	9	E	CL	2	–	–
901	9	E1	CL	2	–	–
EXT.						
8003	8	F	B	–	–	–
8002	8	F	B	–	–	–
8001	8	Q	OB	15	–	–
899	8	Q	OB	15	–	–
898	8	Q	OB	15	–	–
897	8	Q	OB	15	–	–
896	8	Q	OB	15	–	–
895	8	Q	OB	15	–	–
894	8	Q	OB	15	–	–
893	8	Q	W	15	–	–
892	8	Q	W	15	–	–
891	8	Q	W	15	–	–
890	8	Q	W	15	–	–
889	8	Q	W	15	–	–
888	8	Q	W	15	–	–
887	8	Q	W	15	–	–
886	8	Q	W	15	–	–
885	8	Q	W	15	–	–
884	8	Q	W	15	–	–
883	8	Q	W	15	–	–
882	8	Q	W	15	–	–
881	8	Q	W	15	–	–
880	8	Q	W	15	–	–
879	8	Q	W	15	–	–
878	8	Q	W	15	–	–
877	8	Q	W	15	–	–
876	8	R	W	9	–	–
875	8	S	W	9	–	–
874	8	S	OB	6	–	–
873	8	Q	W	15	–	–
872	8	Q	W	15	–	–
871	8	Q	OB	54	–	–
870	8	Q	W	15	–	–
869	8	R	W	9	–	–
868	8	Q	W	15	–	–
867	8	R	W	9	–	–
866	8	Q	W	15	–	–
865	8	Q	W	15	–	–
864	8	Q	W	15	–	–
863	8	F1	CL	2	–	–
862	8	F	CL	2	–	–
861	8	F	CL	2	–	–
860	8	F	CL	2	–	–
859	8	F	CL	2	–	–
858	8	F	CL	2	–	–
857	8	F	CL	2	–	–
856	8	F	CL	2	–	–
855	8	F	CL	2	–	–
854	8	F	CL	2	–	–
853	8	F	CL	2	–	–
852	8	F	CL	2	–	–
851	8	F	CL	2	–	–
850	8	F1	CL	2	–	–
849	8	F1	CL	2	–	–
848	8	F	CL	2	–	–
847	8	F	CL	2	–	–
846	8	F	CL	2	–	–
845	8	F	CL	2	–	–
844	8	F	CL	2	–	–
843	8	F	CL	2	–	–
842	8	F	CL	2	–	–
841	8	F	CL	2	–	–
840	8	F	CL	2	–	–
839	8	F	CL	2	–	–
838	8	F	CL	2	–	–
837	8	F	CL	2	–	–
836	8	F	CL	2	–	–
835	8	F	CL	2	–	–
834	8	F	CL	2	–	–
833	8	F1	CL	2	–	–
832	8	F1	CL	2	–	–
831	8	F1	CL	2	–	–
830	8	F	CL	2	–	–
829	8	F	CL	2	–	–
828	8	F	CL	2	–	–
827	8	F	CL	2	–	–
826	8	F	CL	2	–	–
825	8	F	CL	2	–	–
824	8	F	CL	2	–	–
823	8	F	CL	2	–	–
822	8	F	CL	2	–	–
821	8	F	CL	2	–	–
820	8	F	CL	2	–	–
819	8	F1	CL	2	–	–
818	8	F1	CL	2	–	–
817	8	F	CL	2	–	–
816	8	F	CL	2	–	–
815	8	F	CL	2	–	–
814	8	F	CL	2	–	–
813	8	F	CL	2	–	–
812	8	F	CL	2	–	–
811	8	F	CL	2	–	–
810	8	F	CL	2	–	–
809	8	F	CL	2	–	–
808	8	F	CL	2	–	–
EXTERIOR FACADE						

NUMBER	FLOOR	TYPE	GLAZING TYPE	NUMBER OF PANES	NUMBER OF PANES TO BE REPLACED	NOTES
EXTERIOR ELEVATION						
994	9	E	B	2	–	–
993	9	E	B	2	–	–
992	9	Q	W	15	–	–
991	9	Q	W	15	–	–
990	9	Q	W	15	–	–
989	9	Q	W	15	–	–
988	9	Q	W	15	–	–
987	9	Q	W	15	–	–
986	9	Q	W	15	–	–
985	9	Q	W	15	–	–
984	9	Q	W	15	–	–
983	9	Q	W	15	–	–
982	9	Q	W	15	–	–
981	9	Q	W	15	–	–
980	9	Q	W	15	–	–
979	9	Q	W	15	–	–
978	9	Q	W	15	–	–
977	9	Q	W	15	–	–
976	9	Q	W	15	–	–
975	9	Q	W	15	–	–
974	9	Q	W	15	–	–
973	9	Q	W	15	–	–
972	9	Q	W	15	–	–
971	9	Q	W	15	–	–
970	9	Q	W	15	–	–
969	9	Q	W	15	–	–
968	9	R	W	9	–	–
967	9	R	W	9	–	–
966	9	S	OB	6	–	–
965	9	Q	W	15	–	–
964	9	Q	W	15	–	–
963	9	Q	OB	54	–	–
962	9	Q	OB	54	–	–
961	9	Q	OB	48	48	3
960	9	R	OB	9	–	–
959	9	R	OB	9	–	–
958	9	Q	OB	15	–	–
957	9	Q	W	15	–	–
956	9	Q	W	15	–	–
955	9	Q	W	15	–	–
954	9	E1	CL	9	–	–
953	9	E	CL	2	–	–
952	9	E	CL	2	–	–
951	9	E	CL	2	–	–
950	9	E	CL	2	–	–
949	9	E	CL	2	–	–
948	9	E	CL	2	–	–
947	9	E	CL	2	–	–
946	9	E	CL	2	–	–
945	9	E1	CL	2	–	–
944	9	E1	CL	2	–	–
943	9	E	CL	2	–	–
942	9	E	CL	2	–	–
941	9	E	CL	2	–	–
940	9	E	CL	2	–	–
939	9	E	CL	2	–	–
938	9	E	CL	2	–	–
937	9	E	CL	2	–	–
936	9	E	CL	2	–	–
935	9	E	CL	2	–	–
934	9	E	CL	2	–	–
933	9	E	CL	2	–	–
932	9	E1	CL	2	–	–
931	9	E1	CL	2	–	–
930	9	E	CL	2	–	–
929	9	E	CL	2	–	–
928	9	E	CL	2	–	–
927	9	E	CL	2	–	–
926	9	E	CL	2	–	–
925	9	E	CL	2	–	–
924	9	E	CL	2	–	–
923	9	E	CL	2	–	–
922	9	E	CL	2	–	–
921	9	E	CL	2	–	–
920	9	E	CL	2	–	–
919	9	E1	CL	2	–	–
918	9	E1	CL	2	–	–
917	9	E	CL	2	–	–
916	9	E	CL	2	–	–
915	9	E	CL	2	–	–
INTERIOR LIGHT COURT						
1003	8	F	B	–	–	–
1002	8	F	B	–	–	–
1001	8	Q	OB	15	–	–
999	8	Q	OB	15	–	–
998	8	Q	OB	15	–	–
997	8	Q	OB	15	–	–
996	8	Q	OB	15	–	–
995	8	Q	OB	15	–	–
994	8	Q	OB	15	–	–
993	8	Q	W	15	–	–
992	8	Q	W	15	–	–
991	8	Q	W	15	–	–
990	8	Q	W	15	–	–
989	8	Q	W	15	–	–
988	8	Q	W	15	–	–
987	8	Q	W	15	–	–
986	8	Q	W	15	–	–
985	8	Q	W	15	–	–
984	8	Q	W	15	–	–
983	8	Q	W	15	–	–
982	8	Q	W	15	–	–
981	8	Q	W	15	–	–
980	8	Q	W	15	–	–
979	8	Q	W	15	–	–
978	8	Q	W	15	–	–
977	8	Q	W	15	–	–
976	8	Q	W	15	–	–
975	8	Q	W	15	–	–
974	8	Q	W	15	–	–
973	8	Q	W	15	–	–
972	8	Q	W	15	–	–
971	8	Q	W	15	–	–
970	8	Q	W	15	–	–
969	8	Q	W	15	–	–
968	8	Q	W	15	–	–
967	8	Q	W	15	–	–
966	8	Q	W	15	–	–
965	8	Q	W	15	–	–
964	8	Q	W	15	–	–
963	8	Q	W	15	–	–
962	8	Q	W	15	–	–
961	8	Q	W	15	–	–
960	8	Q	W	15	–	–
959	8	Q	W	15	–	–
958	8	Q	W	15	–	–
957	8	Q	W	15	–	–
956	8	Q	W	15	–	–
955	8	Q	W	15	–	–
954	8	Q	W	15	–	–
953	8	Q	W	15	–	–
952	8	Q	W	15	–	–
951	8	Q	W	15	–	–
950	8	Q	W	15	–	–
949	8	Q	W	15	–	–
948	8	Q	W	15	–	–
947	8	Q	W	15	–	–
946	8	Q	W	15	–	–
945	8	Q	W	15	–	–
944	8	Q	W	15	–	–
943	8	Q	W	15	–	–
942	8	Q	W	15	–	–
941	8	Q	W	15	–	–
940	8	Q	W	15	–	–
939	8	Q	W	15	–	–
938	8	Q	W	15	–	–
937	8	Q	W	15	–	–
936	8	Q	W	15	–	–
935	8	Q	W	15	–	–
934	8	Q	W	15	–	–
933	8	Q	W	15	–	–
932	8	Q	W	15	–	–
931	8	Q	W	15	–	–
930	8	Q	W	15	–	–
929	8	Q	W	15	–	–
928	8	Q	W	15	–	–
927	8	Q	W	15	–	–
926	8	Q	W	15	–	–
925	8	Q	W	15	–	–
924	8	Q	W	15	–	–
923	8	Q	W	15	–	–
922	8	Q	W	15	–	–
921	8	Q	W	15	–	–
920	8	Q	W	15	–	–
919	8	Q	W	15	–	–
918	8	Q	W	15	–	–
917	8	Q	W	15	–	–
916	8	Q	W	15	–	–
915	8	Q	W	15	–	–
EXTERIOR FACADE						

NOTE: REFER TO SHEET HA7.04 FOR WINDOW REPAIR METHODOLOGY AND NOTES

ALL DRAWINGS AND WRITTEN MATERIAL APPEARING HEREIN CONSTITUTE THE ORIGINAL AND UNPUBLISHED WORK OF THE ARCHITECT AND THE SAME MAY NOT BE DUPLICATED, USED OR DISCLOSED WITHOUT THE WRITTEN CONSENT OF THE ARCHITECT. COPYRIGHT, NADEL ARCHITECTS INC. ALL RIGHTS RESERVED.

NADEL Architects Inc.
1990 So. Bundy Dr.
Fourth Floor
Los Angeles, CA 90025
T. 310.826.2100
F. 310.826.0182
www.nadelarc.com

CONSULTANT
NAKADA & ASSOCIATES
HISTORIC PRESERVATION ARCHITECT

COUNTY OF LOS ANGELES

THE HALL OF JUSTICE

STRUCTURAL RETROFIT PHASE

REVISIONS
DRAWING TITLE

WINDOW SCHEDULE

SCALE : NO SCALE
DATE :
JOB NO :
SHEET NO.

HA7.03

SCOPING DOCUMENTS 100% SUBMISSION AUGUST 2010

HALL OF JUSTICE WINDOW REHABILITATION SCHEDULE

NUMBER	FLOOR	TYPE	GLAZING TYPE	NUMBER OF PANES	NUMBER OF PANES TO BE REPLACED	NOTES	
1001	10	A1	OB	54	54	–	EXTERIOR ELEVATION
1002–17	10	A	–	40	40	–	
1018	10	A1	–	54	54	–	
1019	10	A1	–	54	54	–	
1020–1031	10	A	–	40	40	–	
1032	10	A1	–	54	54	–	
1033	10	A1	–	54	54	–	
1034–1049	10	A	–	40	40	–	
1050	10	A1	–	54	54	–	
1051	10	A1	–	54	54	–	
1052–1063	10	A	–	40	40	–	
1064	10	A1	–	54	54	–	
1065 – 1068	10	N	–	48	48	–	INTERIOR LIGHT COURT
1069	10	N	–	48	–	7	
1070 – 1073	10	N	–	48	–	8	
1074 – 1075	10	N	–	48	48	–	
1076	10	O	–	25	25	–	
1077	10	P	–	20	20	–	
1078 – 1082	10	N	–	48	48	–	
1083 – 1084	10	N	–	48	48	–	
1085 – 1090	10	N	–	48	48	–	
1091 – 1094	10	–	–	48	48	–	
1095	10	N	–	48	–	7	
1096	10	N	–	48	–	3, 7	
1097 – 10003	10	N	–	48	–	7	
1101	11	D	OB	60	60	–	EXTERIOR FACADE
1102	11	B	–	72	72	–	
1103	11	B	–	72	72	10	
1104 – 1117	11	B	–	72	72	–	
1118	11	D	–	60	60	–	
1119	11	D	–	60	60	–	
1120 – 1131	11	B	–	72	72	–	
1132	11	D	–	60	60	–	
1133	11	D	–	60	60	–	
1134 – 1149	11	B	–	72	72	–	
1150	11	D	–	60	60	–	
1151	11	D	–	60	60	–	
1152 – 1157	11	B	–	72	72	–	
1158	11	B	–	72	72	10	
1159 – 1161	11	B	–	72	72	–	
1162	11	B	–	72	72	10	
1163	11	B	–	72	72	–	
1164	11	D	–	60	60	–	
1165 – 1168	11	N	–	48	48	–	INTERIOR LIGHT COURT
1169	11	N	–	48	–	7	
1170	11	N	–	48	48	–	
1171 – 1174	11	N	–	48	–	8	
1175 – 1176	11	N	–	48	48	–	
1177	11	P	–	20	20	–	
1178	11	O	–	25	25	–	
1179	11	O	–	25	25	–	
1180 – 1184	11	N	–	48	48	–	
1185 – 1186	11	N	–	48	48	–	
1187 – 1192	11	N	–	48	48	–	
1193 – 1196	11	N	–	48	48	–	
1197 – 11001	11	N	–	48	–	7	
11002 – 11003	11	N	–	48	–	3, 7	
11004 – 11005	11	N	–	48	–	7	
1201	12	C	OB	48	48	–	EXTERIOR FACADE
1202	12	B	–	72	72	–	
1203	12	B	–	72	72	10	
1204 – 1217	12	B	–	72	72	–	
1218	12	C	–	48	48	–	
1219	12	C	–	48	48	–	
1220 – 1231	12	B	–	72	72	–	
1232	12	C	–	48	48	–	
1233	12	C	–	48	48	–	
1234 – 1249	12	B	–	72	72	–	
1250	12	C	–	48	48	–	
1251	12	C	–	48	48	10	
1252 – 1257	12	B	–	72	72	–	
1258	12	B	–	72	72	10	
1259 – 1261	12	B	–	72	72	–	
1262	12	B	–	72	72	10	
1263	12	B	–	72	72	–	
1264	12	C	–	48	48	–	
1265 – 1268	12	N	–	48	48	–	INTERIOR LIGHT COURT
1269	12	N	–	48	–	7	
1270	12	N	–	48	–	3, 7	
1271	12	N	–	48	–	3, 7	
1272 – 1274	12	N	–	48	–	8	
1275 – 1276	12	N	–	48	48	–	
1277	12	P	–	20	20	–	
1278	12	O	–	25	25	–	
1279	12	O	–	25	25	–	
1280 – 1284	12	N	–	48	48	–	
1285 – 1286	12	N	–	48	48	–	
1287 – 1292	12	N	–	48	48	–	
1293 – 1296	12	N	–	48	48	–	
1297	12	N	–	48	–	7	
1298	12	N	–	48	–	7	
1299	12	N	–	48	–	3, 7	
12001	12	N	–	48	48	3	
12002	12	N	–	48	48	3	
12003	12	N	–	48	48	3, 7	
12004	12	N	–	48	48	3, 7	
12005	12	N	–	48	48	3, 7	
1301 – 1302	13	B	OB	72	72	–	EXTERIOR FACADE
1303	13	B	OB	72	72	10	
1304 – 1357	13	B	OB	72	72	–	
1358	13	B	OB	72	72	10	
1359 – 1361	13	B	OB	72	72	–	
1362	13	B	OB	72	72	10	
1363 – 1364	13	B	OB	72	72	–	

NUMBER	FLOOR	TYPE	GLAZING TYPE	NUMBER OF PANES	NUMBER OF PANES TO BE REPLACED	NOTES	
1365 – 1368	13	N	–	48	48	–	INTERIOR LIGHT COURT
1369 – 1371	13	N	–	48	–	7	
1372 – 1374	13	N	–	48	–	8	
1375 – 1376	13	N	–	48	48	–	
1377	13	P	–	20	20	–	
1378	13	O	–	25	25	–	
1379	13	O	–	25	25	–	
1380 – 1384	13	N	–	48	48	–	
1385 – 1386	13	N	–	48	48	–	
1387 – 1392	13	N	–	48	48	–	
1393 – 1396	13	N	–	48	48	–	
1397 – 1398	13	N	–	48	–	7	
1399	13	N	–	48	–	3, 7	
13001 – 13002	13	N	–	48	48	–	
13003	13	N	–	48	–	3, 7	
13004	13	N	–	48	–	7	
13005	13	N	–	48	–	3, 7	
1401 – 1408	14	A2	OB	40	40	10	EXTERIOR FACADE
1409	14	A2	OB	40	40	3, 10	
1410	14	A2	OB	40	40	3, 10	
1411	14	A2	OB	40	40	10	
1412	14	A2	OB	40	40	3, 10	
1413	14	A2	OB	40	40	3, 10	
1414 – 1416	14	A2	OB	40	40	10	
1417	14	A2	OB	40	40	3, 10	
1418	14	A2	OB	40	40	3, 10	
1419	14	A2	OB	40	40	10	
1420	14	A2	OB	40	40	3, 10	
1421	14	A2	OB	40	40	3, 10	
1422	14	A2	OB	40	40	10	
1423	14	A2	OB	40	40	3, 10	
1424	14	A2	OB	40	40	3, 10	
1425 – 1432	14	A2	OB	40	40	10	
1433	14	A2	OB	40	40	3, 10	
1434	14	A2	OB	40	40	3, 10	
1435	14	A2	OB	40	40	3, 10	
1436 – 1444	14	A2	OB	40	40	10	
1445	14	A2	OB	40	40	3, 10	
1446	14	A2	OB	40	40	3, 10	
1447 – 1448	14	A2	OB	40	40	10	
1449	14	A2	OB	40	40	3, 10	
1450	14	A2	OB	40	40	3, 10	
1451 – 1452	14	A2	OB	40	40	10	
1453	14	A2	OB	40	40	3, 10	
1454 – 1456	14	A2	OB	40	40	10	
1457	14	A2	OB	40	40	3, 10	
1458	14	A2	OB	40	40	10	
1459	14	A2	OB	40	40	3, 10	
1460 – 1462	14	A2	OB	40	40	10	
1463	14	A2	OB	40	40	3, 10	
1464	14	A2	OB	40	40	10	
1465 – 1468	14	M	–	56	56	–	INTERIOR LIGHT COURT
1469	14	M	–	56	56	–	
1470 – 1471	14	M	–	56	–	7	
1472 – 1474	14	M	–	56	–	8	
1475 – 1476	14	M	–	56	56	–	
1477	14	P	–	20	20	–	
1478	14	O	–	25	25	–	
1479	14	O	–	25	25	–	
1480	14	M	–	56	56	3	
1481	14	M	–	56	56	–	
1482	14	M	–	56	56	3	
1483 – 1484	14	M	–	56	56	–	
1485 – 1486	14	M	–	56	56	–	
1487	14	M	–	56	56	–	
1488	14	M	–	56	56	3	
1489 – 1492	14	M	–	56	56	–	
1493	14	M	–	56	56	3	
1494 – 1496	14	M	–	56	56	–	
1497	14	M	–	56	–	7	
1498	14	M	–	56	–	3, 7	
1499	14	M	–	56	–	7	
14001 – 14002	14	M	–	56	56	–	
14003 – 14005	14	M	–	56	–	7	

NUMBER	FLOOR	TYPE	GLAZING TYPE	NUMBER OF PANES	NUMBER OF PANES TO BE REPLACED	NOTES	

WINDOW REPAIR METHODOLOGY

THIS WINDOW SCHEDULE PROVIDES INFORMATION REGARDING WINDOW REPAIRS, WINDOW GLAZING THAT IS TO REMAIN, WINDOW GLAZING THAT IS THE BE REPLACED, TYPE OF GLAZING (CLEAR, OBSCURE, WIRE). REFER TO WINDOW DETAILS FOR REQUIREMENTS TO CAULK AND SEAL WINDOWS. (THIS APPLIES TO ALL WINDOWS)

A. REMOVE ALL EXISTING LEAD BASED PAINT; CONTRACTOR TO FOLLOW ALL GOVERNMENT REGULATIONS REGARDING ABATEMENT AND DISPOSAL OF LEAD BASED PAINT.
B. REMOVE DAMAGED OR BROKEN EXISTING GLAZING ONLY AND PROVIDE NEW GLAZING TO MATCH AT FLOORS 1-9; EXISTING UNDAMAGED GLAZING TO REMAIN IN PLACE.
C. REMOVE EXISTING OBSCURE GLAZING, EXCEPT WHERE SCHEDULE NOTES OBSCURE GLASS TO REMAIN. SALVAGE EXISTING OBSCURE GLASS FOR RE-USE.
D. INSTALL NEW 1/8" CLEAR GLAZING IN BED OF SILICONE SEALANT AT FLOORS 10-14.
E. PROVIDE SEALANT AT ALL JOINTS IN OPERABLE DOUBLE HUNG OR PIVOTING WINDOWS. (FIX OPERABLE SASH IN WINDOWS SHUT WITH SCREWS).
F. PRIME & RE-PAINT ALL WINDOWS
G. WINDOWS WITH DAMAGED EXISTING WIRE GLASS (FLOORS 1-9) TO HAVE NEW WIRE GLASS AS REPLACEMENT.
H. WINDOWS WHERE OBSCURE GLASS IS TO REMAIN, USE SALVAGED OBSCURE GLASS IF BROKEN PANES ARE SCHEDULED TO BE REPAIRED (WHERE POSSIBLE). IF REQUIRED DUE TO SIZE, PROVIDE NEW OBSCURE GLASS TO MATCH EXISTING.

NOTES

1. FABRICATE NEW STEEL FRAMED WINDOW TO MATCH ORIGINAL HISTORIC WINDOW. (SEE SHEETS HA7.05 & HA7.06 FOR EXTERIOR WINDOW DETAILS TO MATCH)
2. WINDOW WAS NOT ACCESSIBLE, FIELD VERIFY EXACT CONDITION.
3. REPLACE MISSING WINDOW MULLIONS OR SASH AS REQUIRED WHERE A.C. UNITS OR HVAC DUCTS WERE INSTALLED; USE EXISTING STEEL WINDOWS SALVAGED WHERE LOUVERS ARE BEING INSTALLED, TO REPLACE MISSING WINDOW MULLIONS AND SASH.
4. REMOVE EXISTING STAINED GLASS & REPLACE WITH CLEAR GLASS.
5. REMOVE EXISTING MASONRY INFILL
6. REMOVE EXISTING DOOR; REPLACE WITH NEW CUSTOM FABRICATED BRONZE WINDOW TO MATCH ORIGINAL.
7. EXISTING OBSCURE GLASS TO REMAIN IN PLACE; SEE WINDOW ELEVATIONS FOR LOCATION.
8. INSTALL NEW MECHANICAL LOUVERS.
9. REMOVE EXISTING METAL INFILL PANEL AND INSTALL CLEAR GLASS; EXISTING WINDOW FRAME TO REMAIN IN PLACE; REPLACE MISSING WINDOW SASH AS REQUIRED, FIELD VERIFY.
10. EXISTING WINDOW DE-INSTALLED IN PREVIOUS PHASE TO BE RE-INSTALLED.

WINDOW GLAZING LEGEND

B	BAR	OB	OBSCURE
CL	CLEAR	W	WIRE
CO	COLORED		

NADEL
Architects Inc.

1990 So. Bundy Dr.
Fourth Floor
Los Angeles, CA 90025

T. 310.826.2100
F. 310.826.0182

www.nadelarc.com

CONSULTANT

NAKADA
&
ASSOCIATES

HISTORIC PRESERVATION ARCHITECT

COUNTY OF LOS ANGELES
THE HALL OF JUSTICE
STRUCTURAL RETROFIT PHASE

REVISIONS

1	
2	
3	
4	
5	
6	

DRAWING TITLE

WINDOW SCHEDULE

SCOPING DOCUMENTS 100% SUBMISSION AUGUST 2010

SCALE : NO SCALE
DATE :
JOB NO :
SHEET NO.

HA7.04

ALL DRAWINGS AND WRITTEN MATERIAL APPEARING HEREIN CONSTITUTE THE ORIGINAL AND UNPUBLISHED WORK OF THE ARCHITECT AND THE SAME MAY NOT BE DUPLICATED, USED OR DISCLOSED WITHOUT THE WRITTEN CONSENT OF THE ARCHITECT. COPYRIGHT: NADEL ARCHITECTS INC. ALL RIGHTS RESERVED.

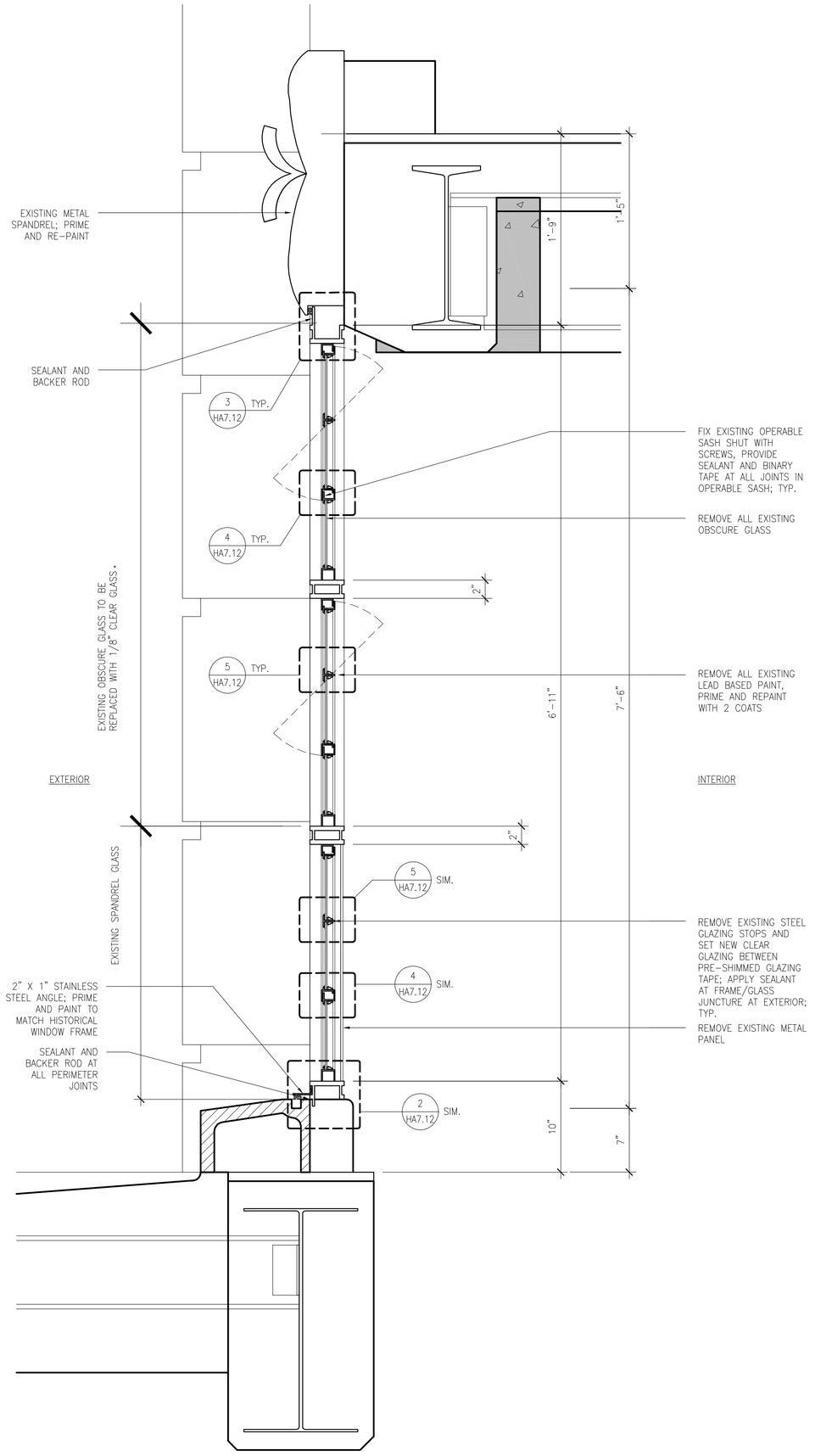

TYP. EXT. WINDOW HEAD / SILL 11TH - 13TH FLOORS (SIM.) | 1 1/2"=1'-0" | 10

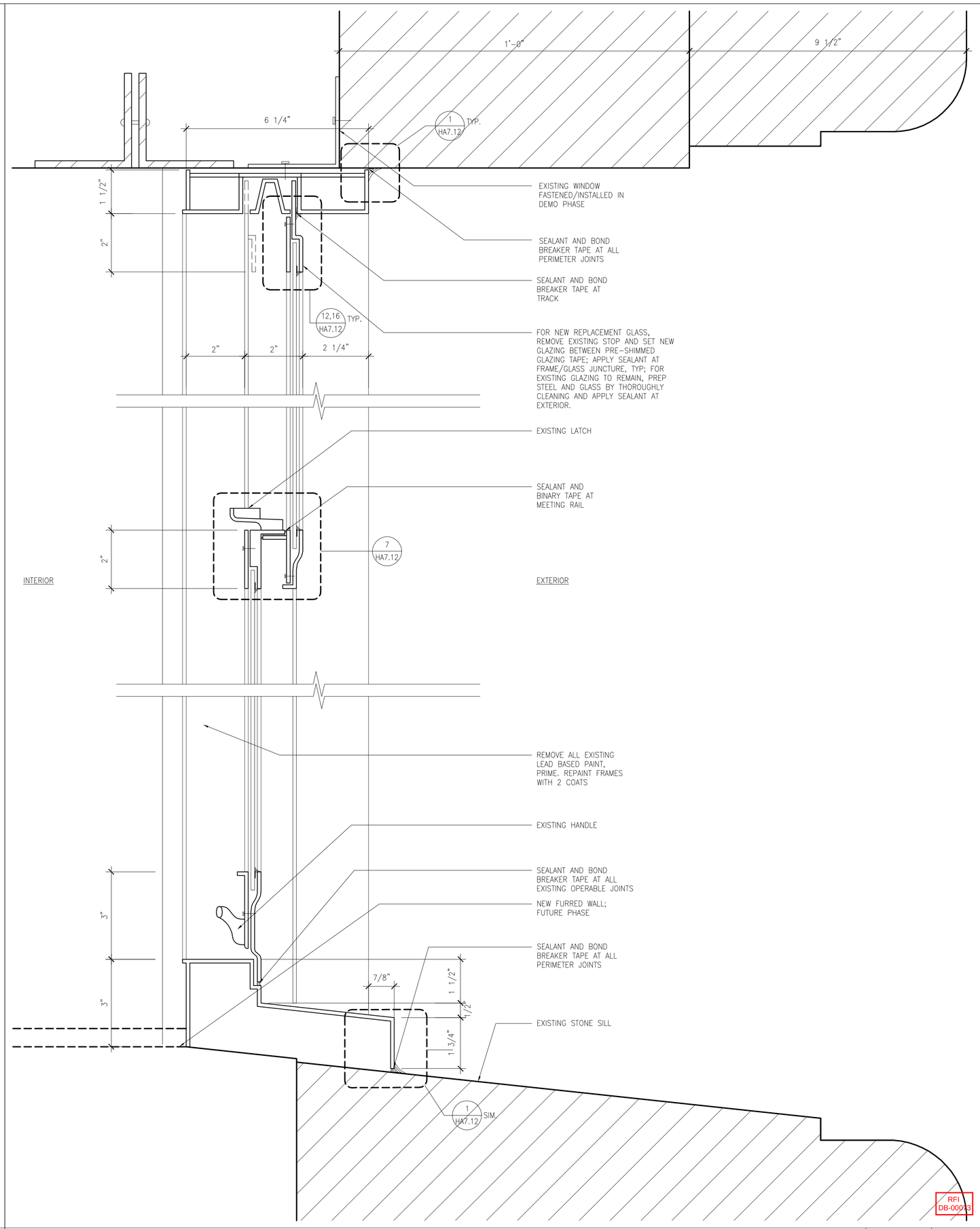

TYPICAL EXTERIOR WINDOW HEAD / SILL 1ST - 9TH FLOORS | 6"=1'-0" | 6

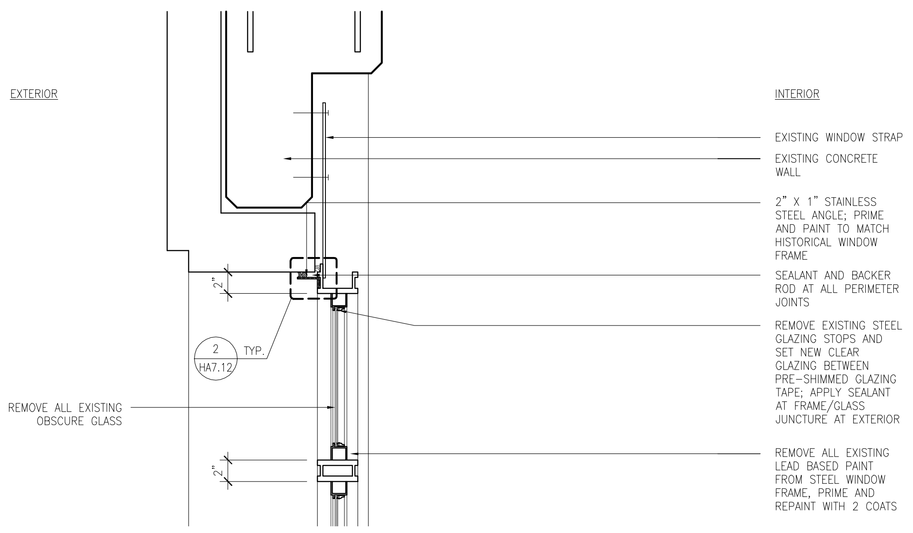

TYPICAL EXTERIOR WINDOW JAMB 11TH - 13TH FLOORS (SIM.) | 1 1/2"=1'-0" | 9

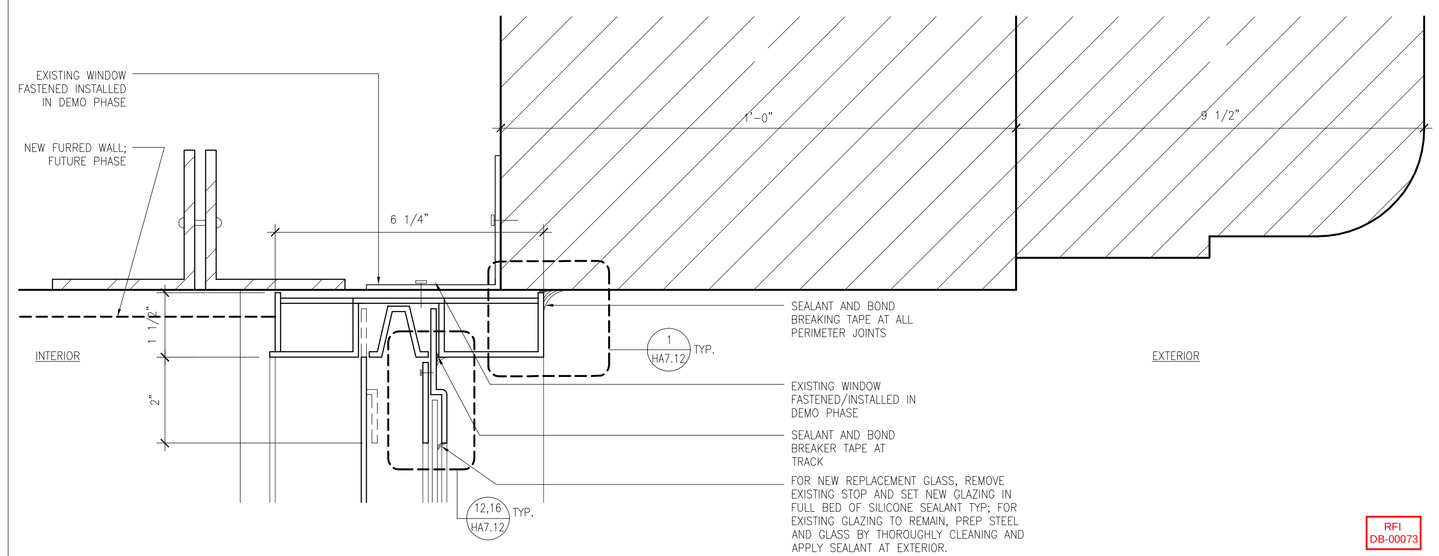

TYPICAL EXTERIOR WINDOW JAMB 1ST - 9TH FLOORS | 6"=1'-0" | 5

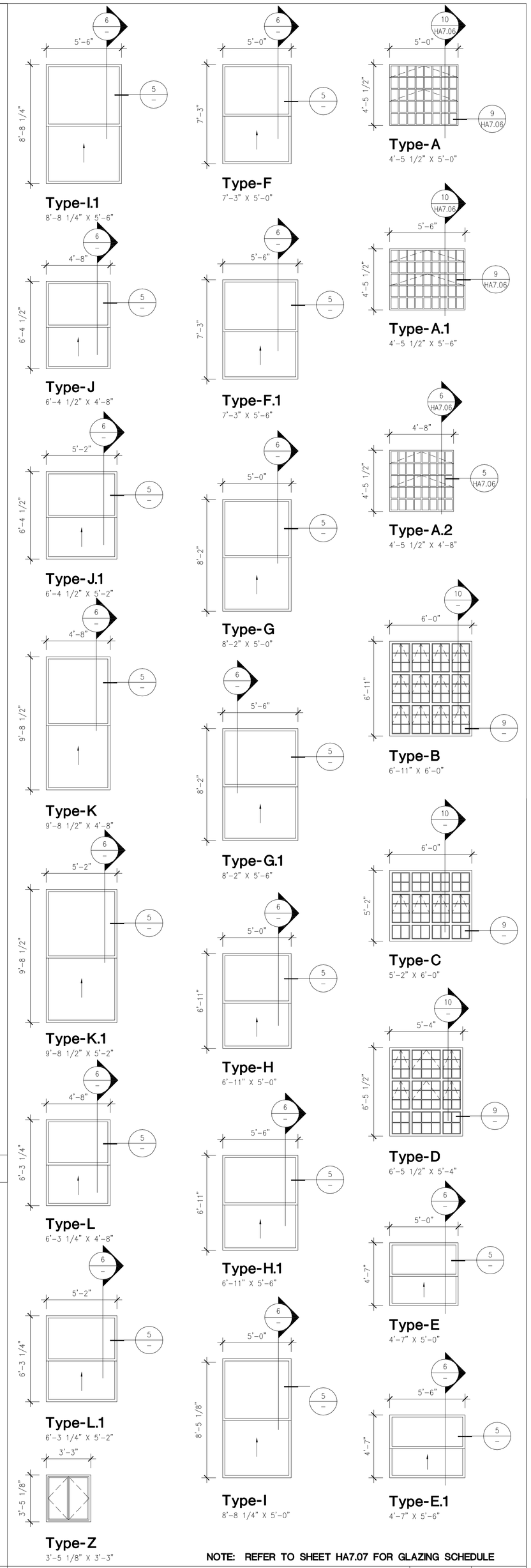

NOTE: REFER TO SHEET HA7.07 FOR GLAZING SCHEDULE

EXTERIOR FACADE WINDOW TYPE ELEVATIONS | 1/4"=1'-0" | 1

NADEL
Architects Inc.

1990 So. Bundy Dr.
Fourth Floor
Los Angeles, CA 90025

T. 310.826.2100
F. 310.826.0182

www.nadelarc.com

CONSULTANT

NAKADA & ASSOCIATES

HISTORIC PRESERVATION ARCHITECT

COUNTY OF LOS ANGELES
THE HALL OF JUSTICE
STRUCTURAL RETROFIT PHASE

REVISIONS

DRAWING TITLE

EXTERIOR ELEVATION
WINDOW DETAILS

SCOPING DOCUMENTS 100% SUBMISSION AUGUST 2010

SCALE : VARIES
DATE :
JOB NO :
SHEET NO.

HA7.05

ALL DRAWINGS AND WRITTEN MATERIAL APPEARING HEREIN CONSTITUTE THE ORIGINAL AND UNPUBLISHED WORK OF THE ARCHITECT AND THE SAME MAY NOT BE DUPLICATED, USED OR DISCLOSED WITHOUT THE WRITTEN CONSENT OF THE ARCHITECT. COPYRIGHT: NADEL ARCHITECTS INC. ALL RIGHTS RESERVED.

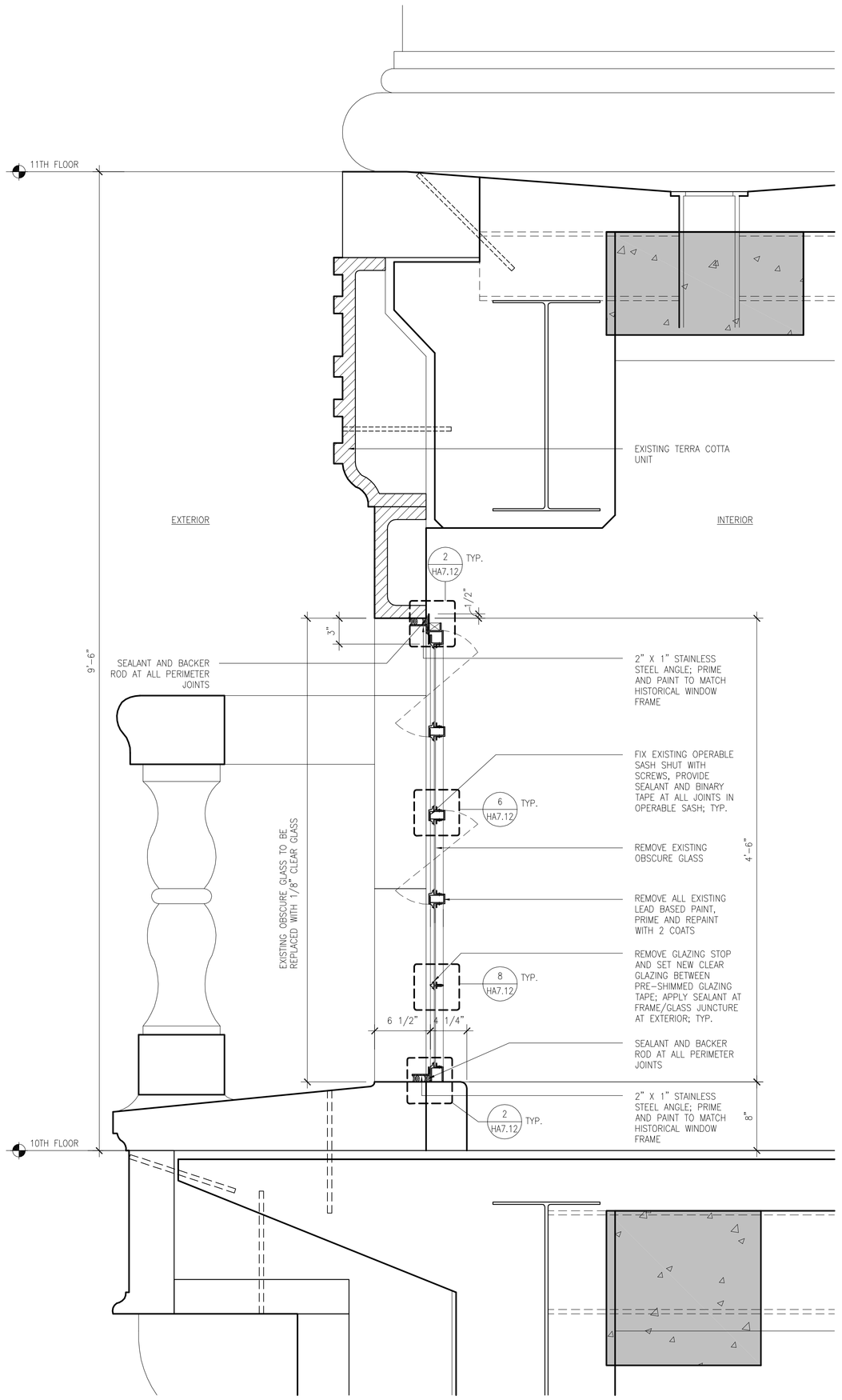

TYPICAL EXTERIOR WINDOW HEAD / SILL @ 10TH FLOOR | 1 1/2"=1'-0" | 10

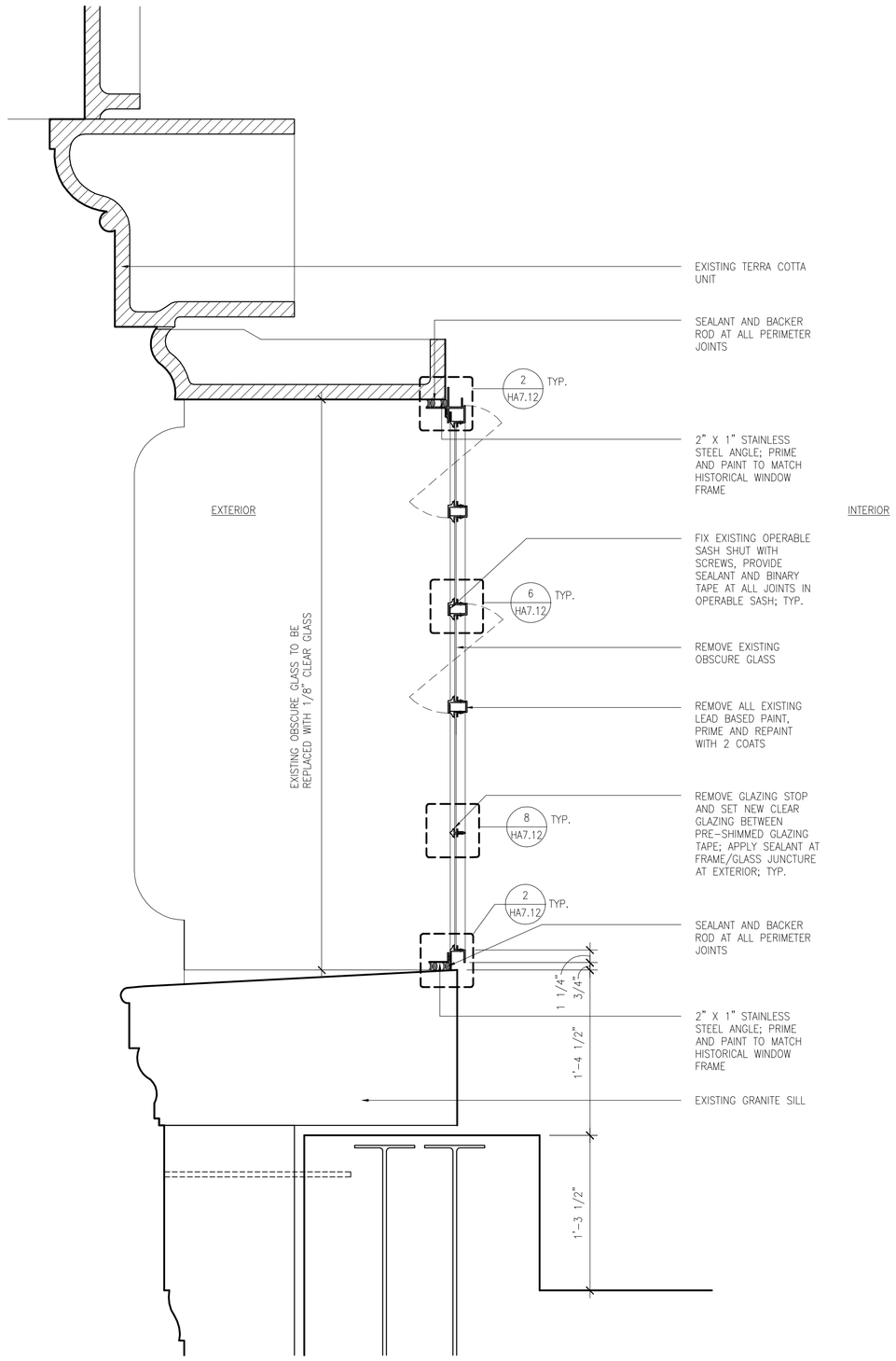

TYPICAL EXTERIOR WINDOW HEAD / SILL @ 14TH FLOOR | 1 1/2"=1'-0" | 6

-

2

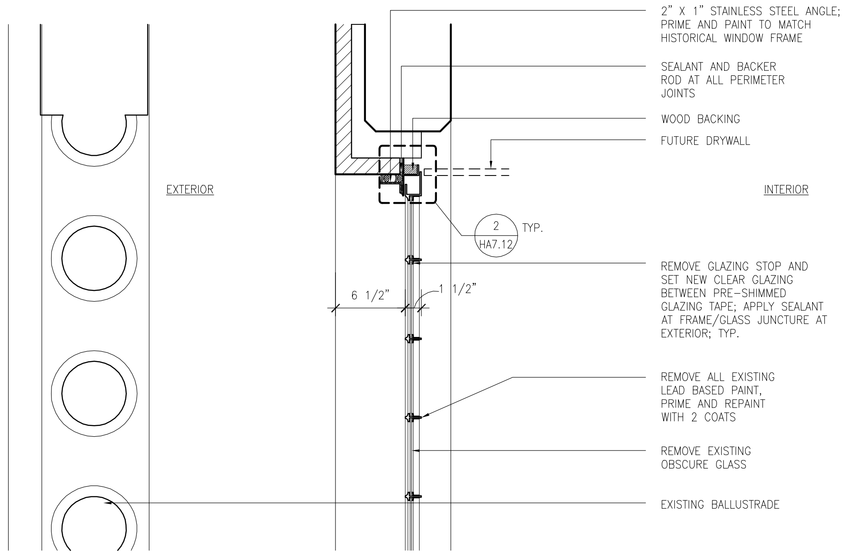

TYPICAL EXTERIOR WINDOW JAMB @ 10TH FLOOR | 1 1/2"=1'-0" | 9

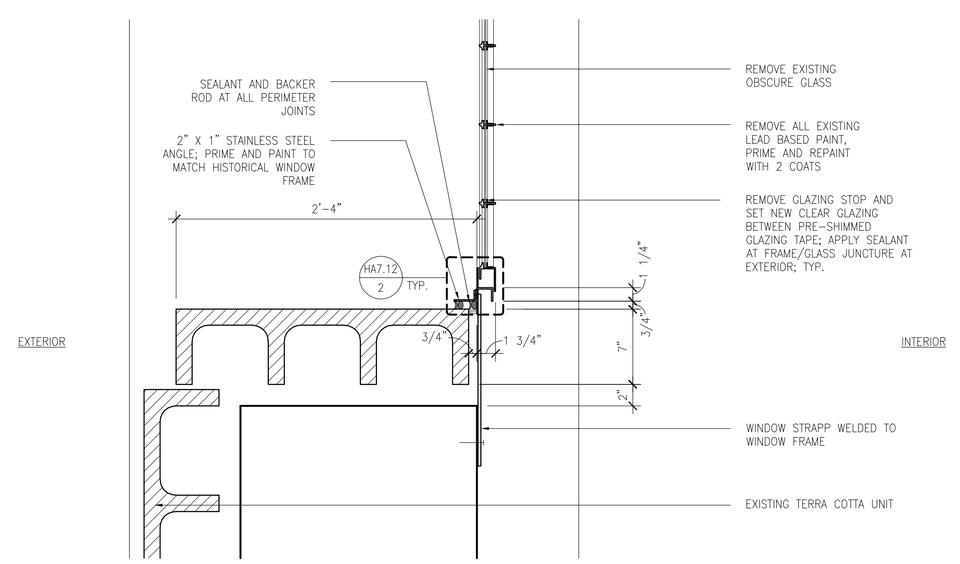

TYPICAL EXTERIOR WINDOW JAMB @ 14TH FLOOR | 1 1/2"=1'-0" | 5

-

1

NADEL
Architects Inc.

1990 So. Bundy Dr.
Fourth Floor
Los Angeles, CA 90025

T. 310.826.2100
F. 310.826.0182

www.nadelarc.com

CONSULTANT

NAKADA & ASSOCIATES

HISTORIC PRESERVATION ARCHITECT

COUNTY OF LOS ANGELES
THE HALL OF JUSTICE
STRUCTURAL RETROFIT PHASE

REVISIONS

1	
2	
3	
4	
5	
6	

DRAWING TITLE

EXTERIOR ELEVATION
WINDOW DETAILS

SCOPING DOCUMENTS 100% SUBMISSION AUGUST 2010

SCALE : VARIES
DATE :
JOB NO :
SHEET NO.

HA7.06

ALL DRAWINGS AND WRITTEN MATERIAL APPEARING HEREIN CONSTITUTE THE ORIGINAL AND UNPUBLISHED WORK OF THE ARCHITECT AND THE SAME MAY NOT BE DUPLICATED, USED OR DISCLOSED WITHOUT THE WRITTEN CONSENT OF THE ARCHITECT. COPYRIGHT: NADEL ARCHITECTS INC. ALL RIGHTS RESERVED.

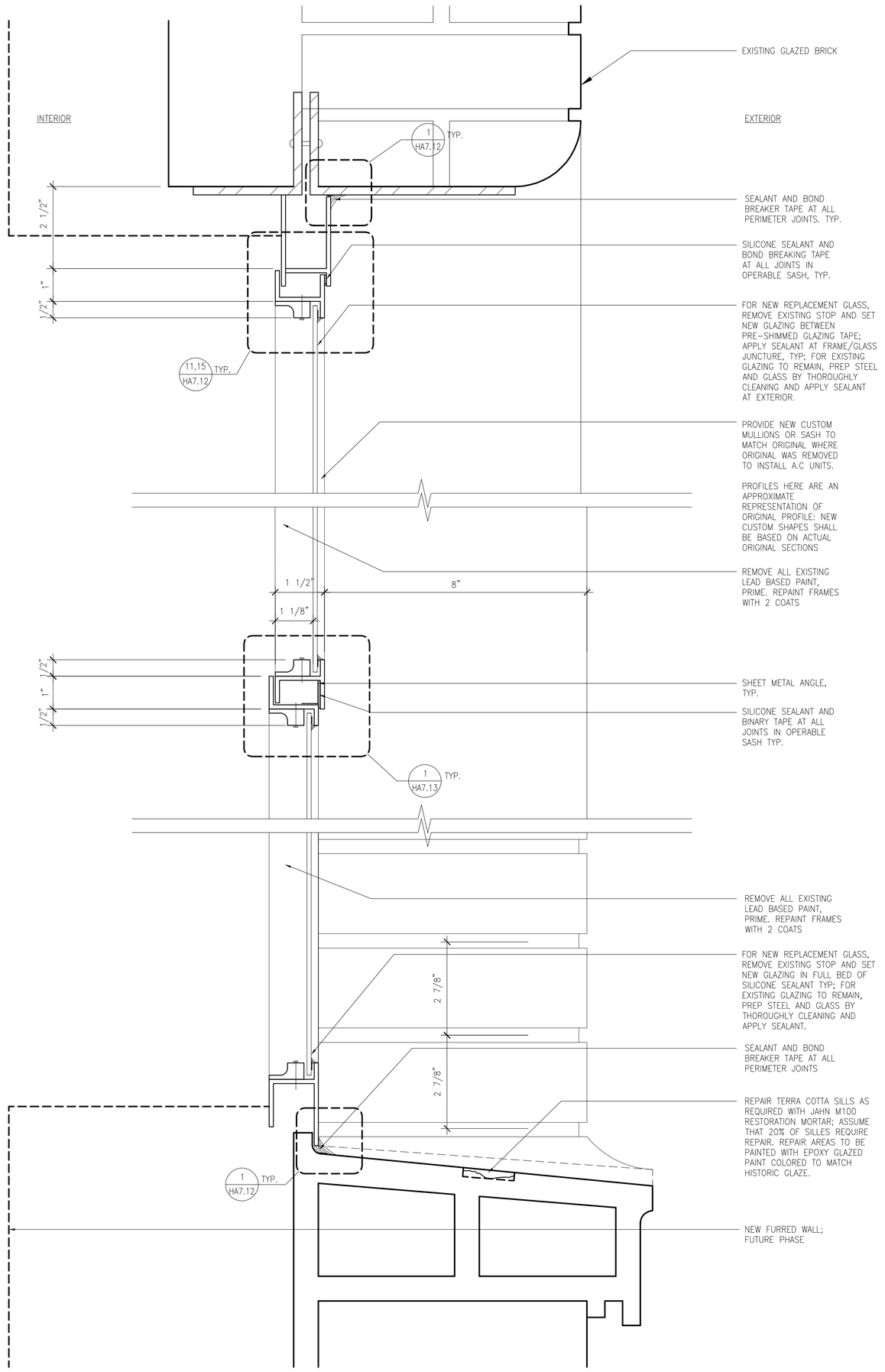

TYPCIAL HEAD / SILL DETAIL WINDOW TYPES Q, R, S, T, U, V — 6"=1'-0" — 10

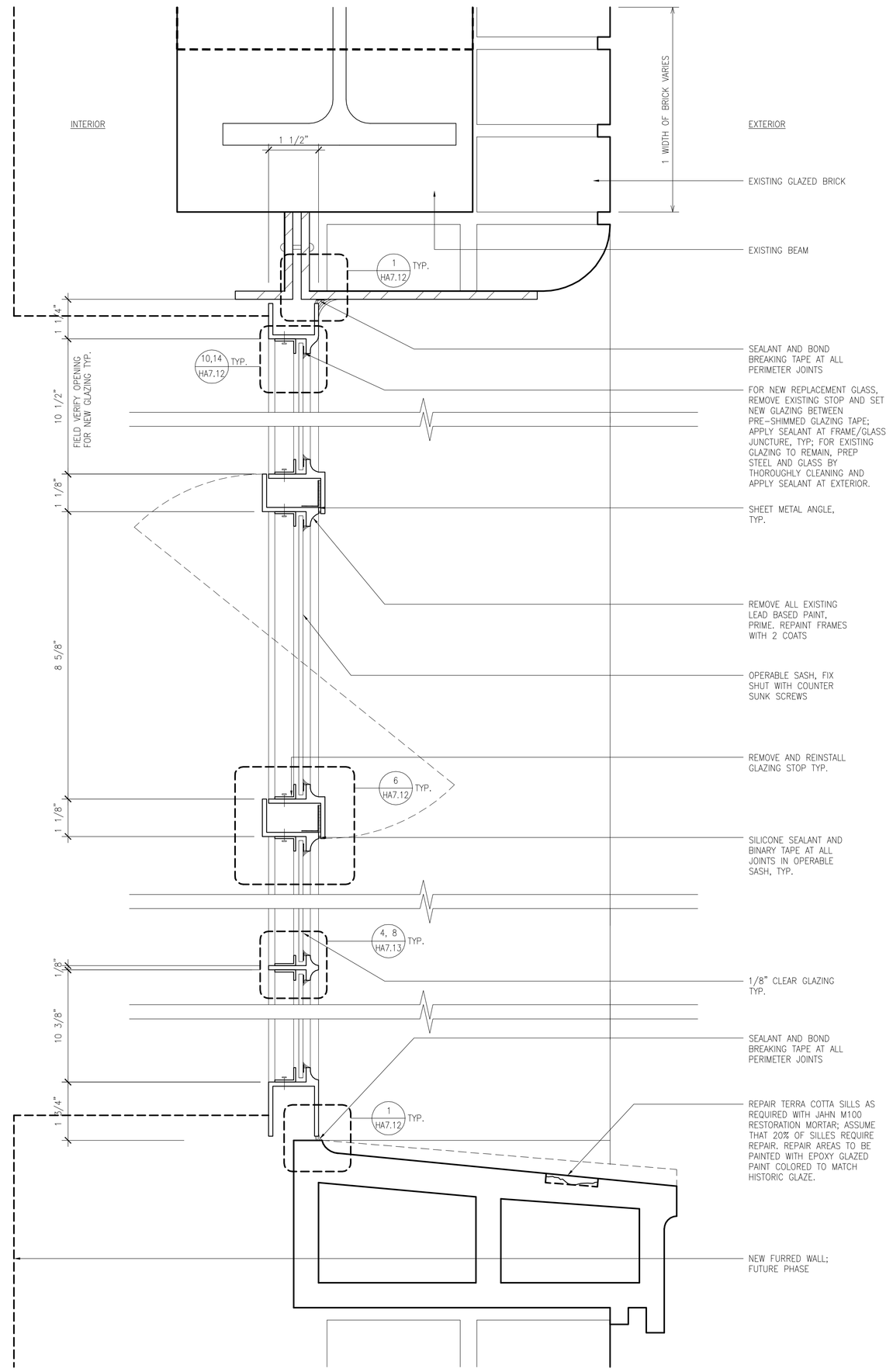

TYPICAL LIGHT COURT STEEL SASH WINDOW HEAD & SILL @ JAIL CELL FLOORS — 6"=1'-0" — 6

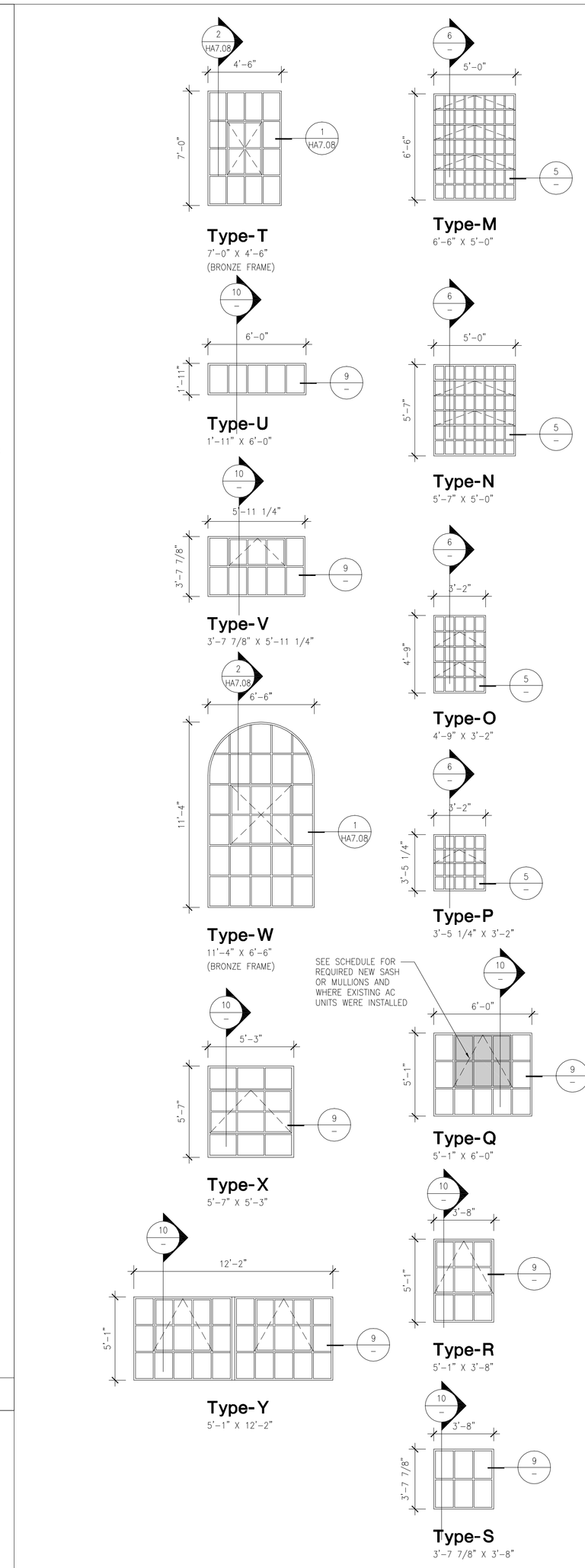

INTERIOR LIGHT COURT WIN. TYPE ELEVATIONS — 1/4"=1'-0" — 2

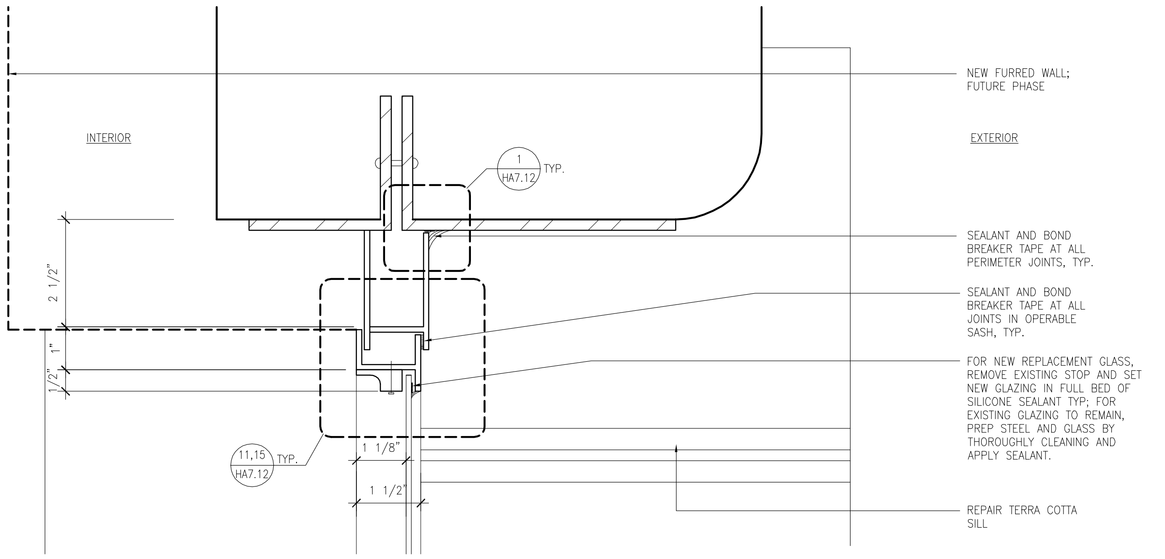

TYPCIAL JAMB DETAIL WINDOW TYPES Q, R, S, T, U, V — 6"=1'-0" — 9

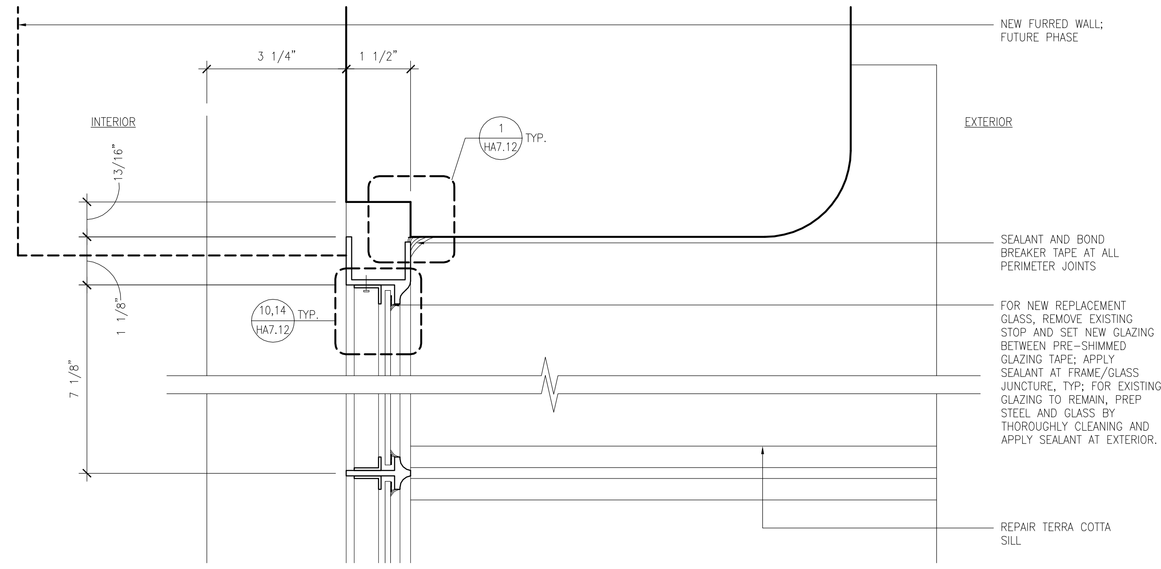

TYPICAL LIGHT COURT STEEL SASH WINDOW JAMB @ JAIL CELL FLOORS — 6"=1'-0" — 5

GLAZING SCHEDULE — 1

TEMPERED SAFETY GLAZING SHALL COMPLY WITH UBC SECTION 2406, AND BE PROVIDED IN THE FOLLOWING LOCATIONS:

1. GLAZING IN DOORS.
2. GLAZING ADJACENT TO DOORS WHERE THE EXPOSED EDGE OF GLAZING IS WITHIN A 24" ARC OF EITHER VERTICAL EDGE OF A DOOR IN A CLOSED POSITION AND WHERE THE BOTTOM EXPOSED EDGE OF GLAZING IS LESS THAN 60" ABOVE THE WALKING SURFACE.
3. GLAZING IN AN INDIVIDUAL FIXED OR OPERABLE PANEL THAT MEETS ALL OF THE FOLLOWING CONDITIONS:
   - A. EXPOSED AREA OF AN INDIVIDUAL PANE GREATER THAN 9 SQUARE FEET.
   - B. EXPOSED BOTTOM EDGE LESS THAN 18" ABOVE THE FLOOR.
   - C. EXPOSED TOP EDGE GREATER THAN 36" ABOVE THE FLOOR.
   - D. ONE OR MORE WALKING SURFACES WITHIN 36" HORIZONTALLY OF THE PLANE OF GLAZING.

NADEL Architects Inc.
1990 So. Bundy Dr.
Fourth Floor
Los Angeles, CA 90025
T. 310.826.2100
F. 310.826.0182
www.nadelarc.com

CONSULTANT

NAKADA & ASSOCIATES

HISTORIC PRESERVATION ARCHITECT

COUNTY OF LOS ANGELES
THE HALL OF JUSTICE
STRUCTURAL RETROFIT PHASE

REVISIONS

DRAWING TITLE

LIGHT COURT WINDOW DETAILS

SCOPING DOCUMENTS 100% SUBMISSION AUGUST 2010

SCALE : VARIES
DATE :
JOB NO :
SHEET NO.

HA7.07

ALL DRAWINGS AND WRITTEN MATERIAL APPEARING HEREIN CONSTITUTE THE ORIGINAL AND UNPUBLISHED WORK OF THE ARCHITECT AND THE SAME MAY NOT BE DUPLICATED, USED OR DISCLOSED WITHOUT THE WRITTEN CONSENT OF THE ARCHITECT. COPYRIGHT: NADEL ARCHITECTS INC. ALL RIGHTS RESERVED.

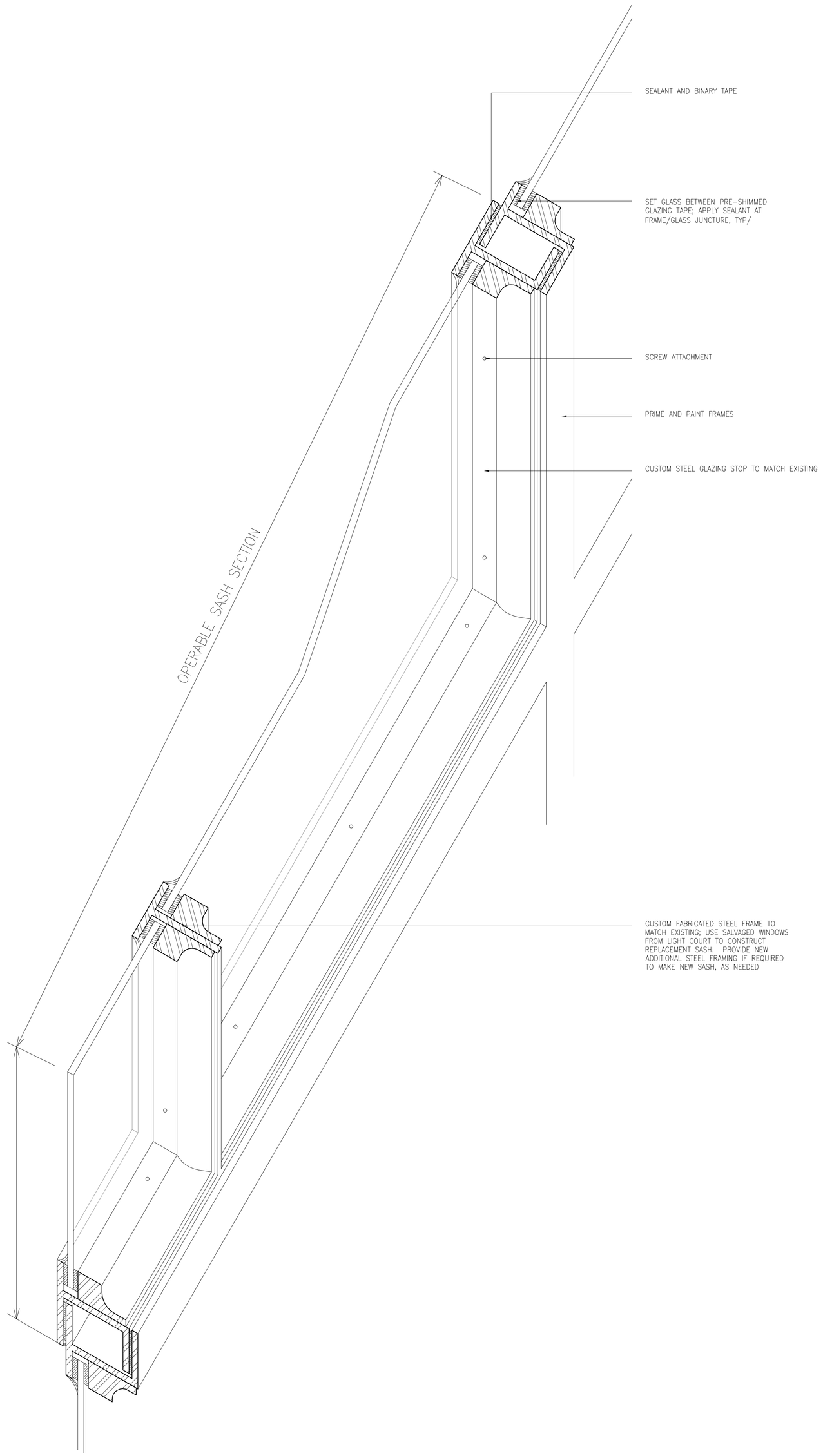

LIGHT COURT WINDOW FABRICATION DETAIL | 6"=1'-0" | 5

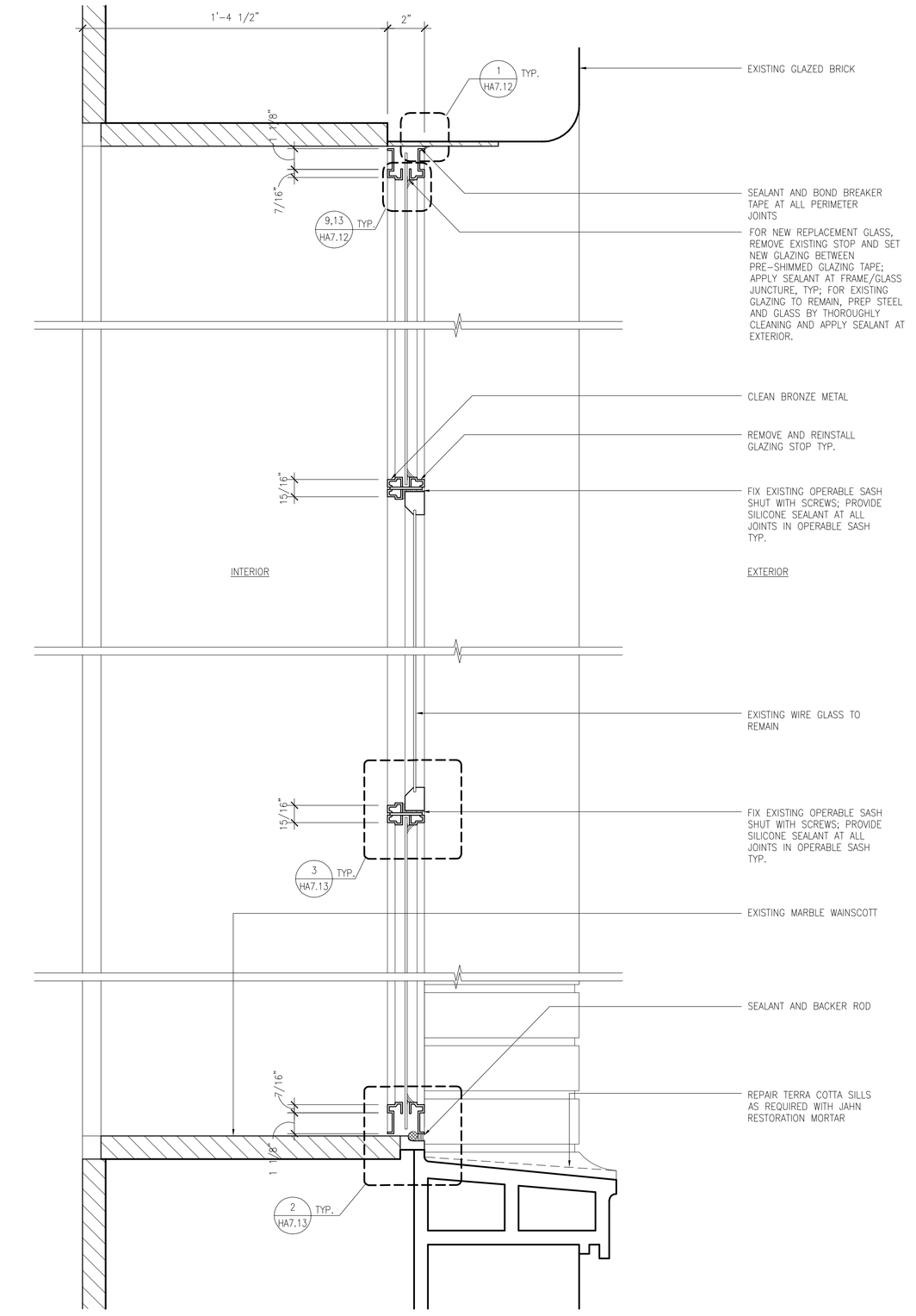

TYPICAL LIGHT COURT BRONZE WINDOW HEAD / SILL TYPES T & W | 3"=1'-0" | 2

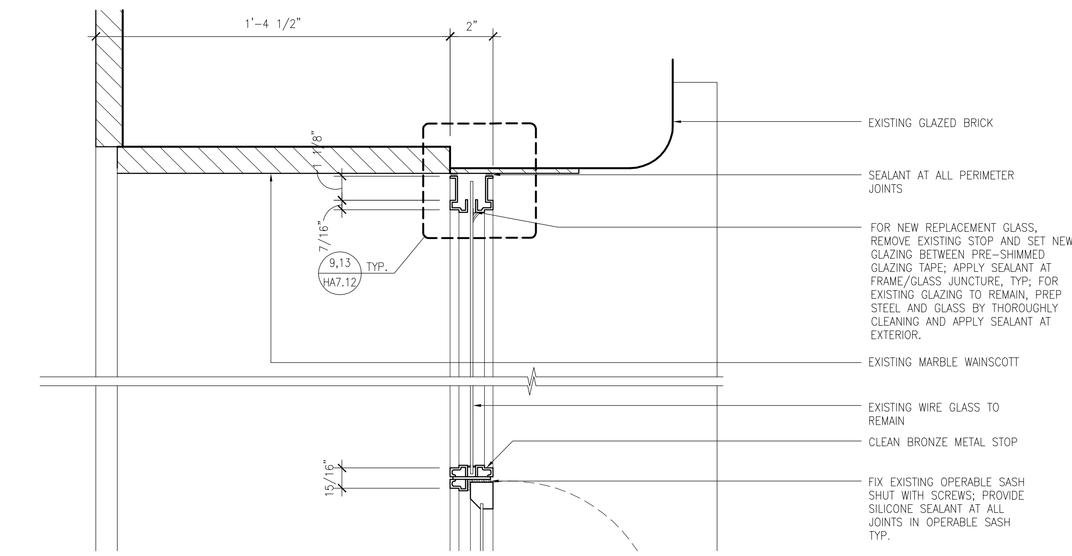

TYPICAL LIGHT COURT BRONZE WINDOW JAMB TYPES T & W | 3"=1'-0" | 1

- | 6"=1'-0" | 13

NADEL
Architects Inc.

1990 So. Bundy Dr.
Fourth Floor
Los Angeles, CA 90025

T. 310.826.2100
F. 310.826.0182

www.nadelarc.com

CONSULTANT

NAKADA & ASSOCIATES

HISTORIC PRESERVATION ARCHITECT

COUNTY OF LOS ANGELES
THE HALL OF JUSTICE
STRUCTURAL RETROFIT PHASE

REVISIONS

1	
2	
3	
4	
5	
6	

DRAWING TITLE

LIGHT COURT BRONZE WINDOW & WINDOW FABRICATION DETAILS

SCOPING DOCUMENTS 100% SUBMISSION AUGUST 2010

SCALE : VARIES
DATE :
JOB NO :
SHEET NO.

HA7.08

ALL DRAWINGS AND WRITTEN MATERIAL APPEARING HEREIN CONSTITUTE THE ORIGINAL AND UNPUBLISHED WORK OF THE ARCHITECT AND THE SAME MAY NOT BE DUPLICATED, USED OR DISCLOSED WITHOUT THE WRITTEN CONSENT OF THE ARCHITECT. COPYRIGHT: NADEL ARCHITECTS INC. ALL RIGHTS RESERVED.

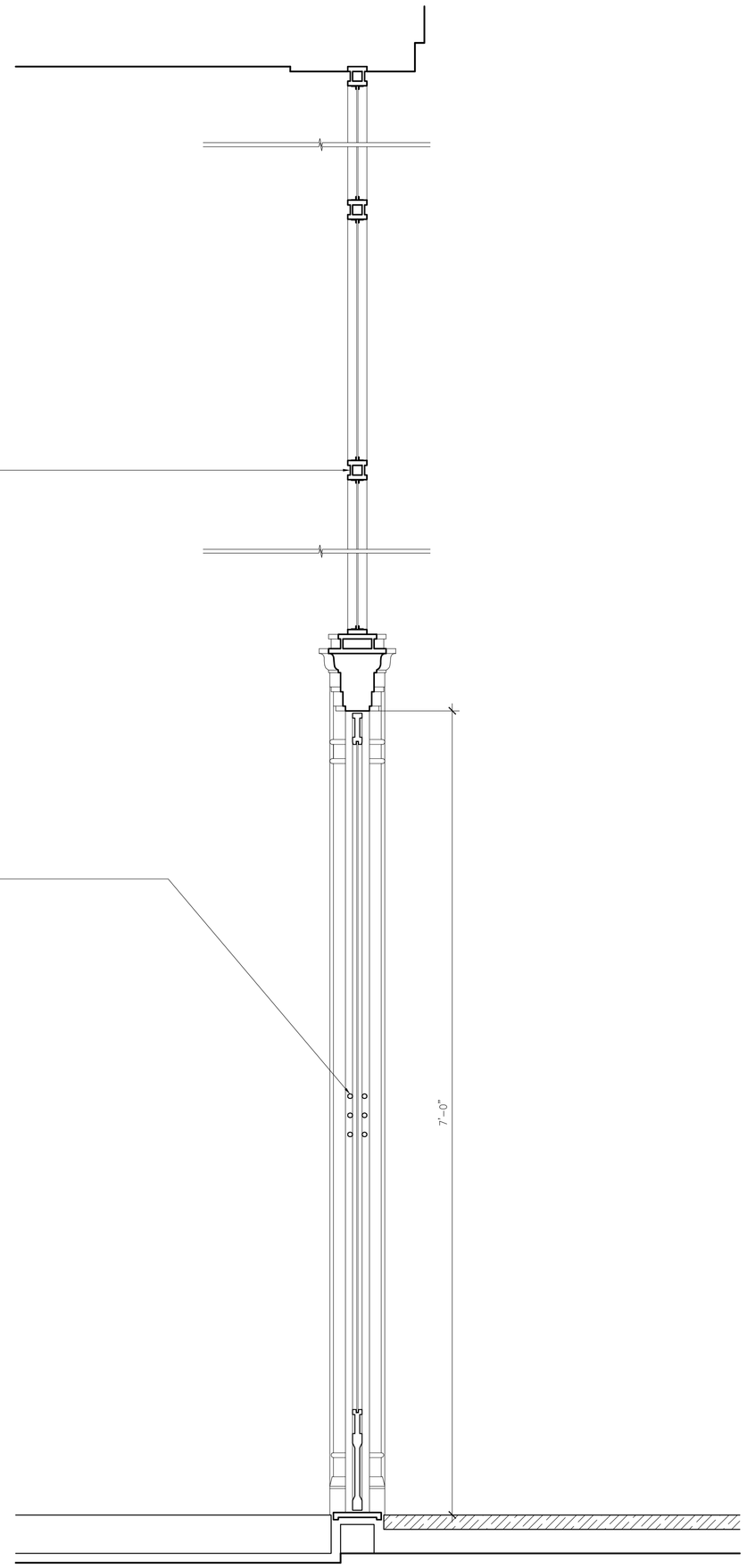

BROADWAY/TEMPLE STREET ENTRANCE FRAME SECTION DETAIL | 1 1/2"=1'-0" | 10

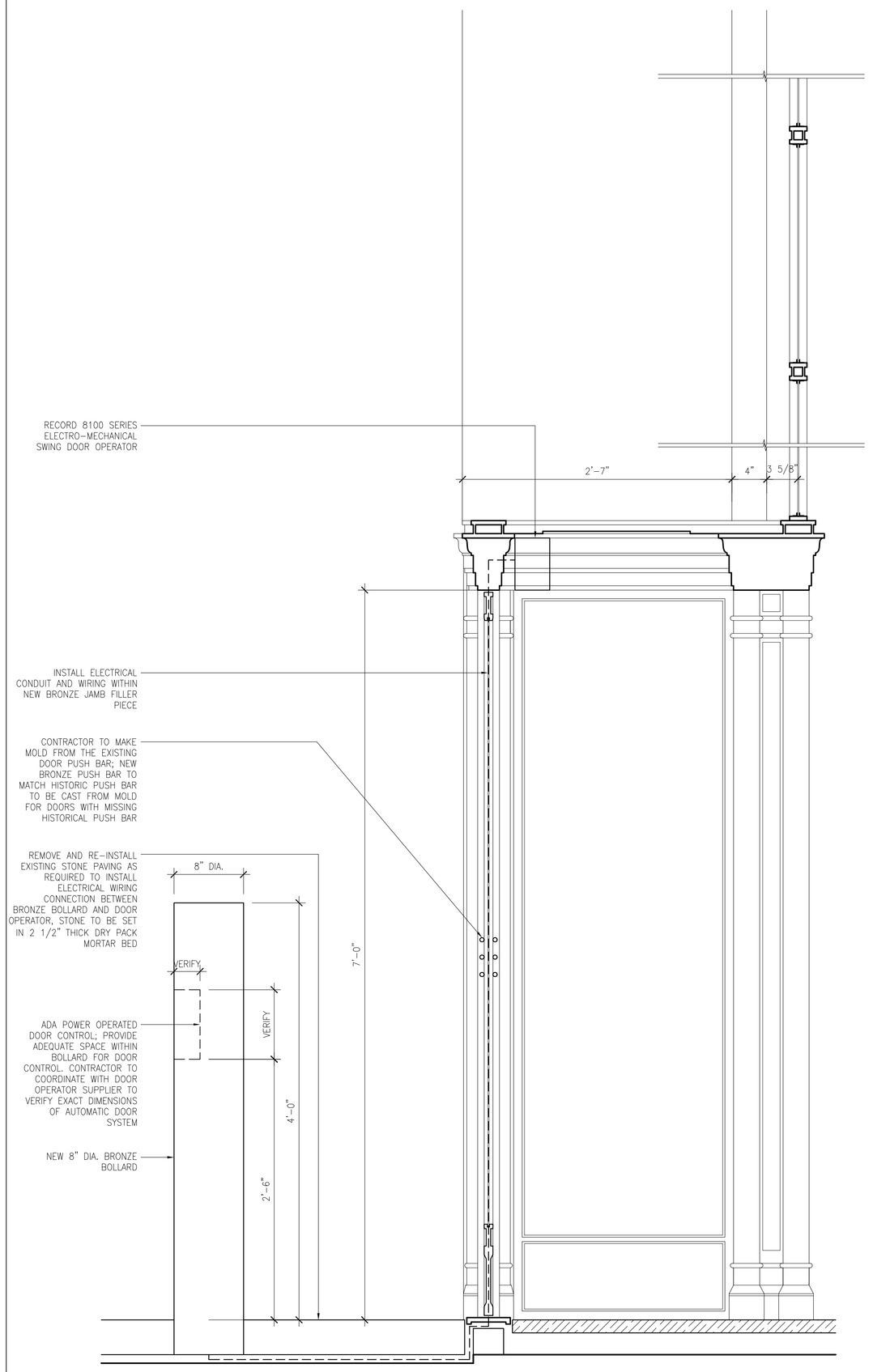

SPRING STREET ENTRANCE FRAME SECTION DETAIL | 1 1/2"=1'-0" | 6

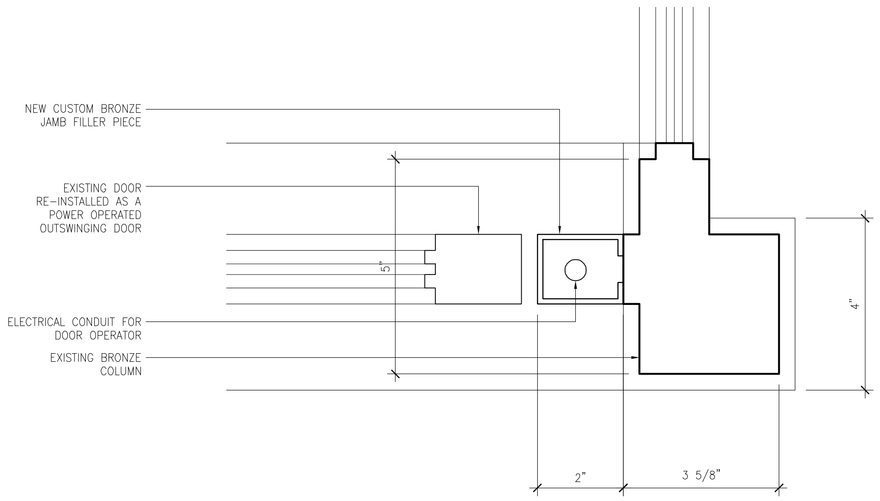

NEW BRONZE FILLER PIECE DETAIL | 6"=1'-0" | 5

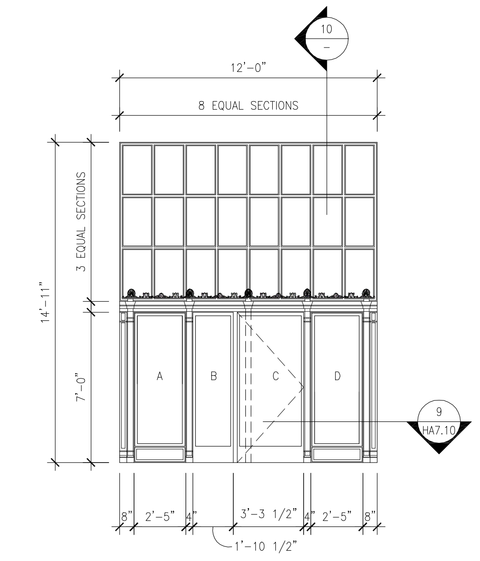

TEMPLE STREET ELEVATION

EXISTING ELEVATION
12'-0" X 14'-11"
107

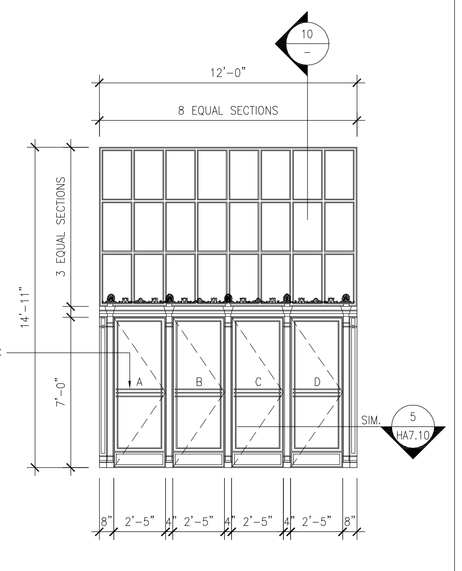

TEMPLE STREET ELEVATION

HISTORIC ELEVATION
12'-0" X 14'-11"
107

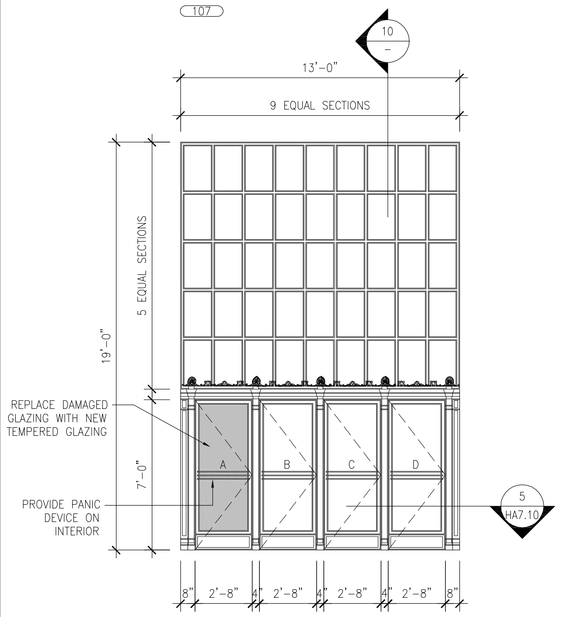

BROADWAY ELEVATION

EXISTING ELEVATION
13'-0" X 19'-0"
106

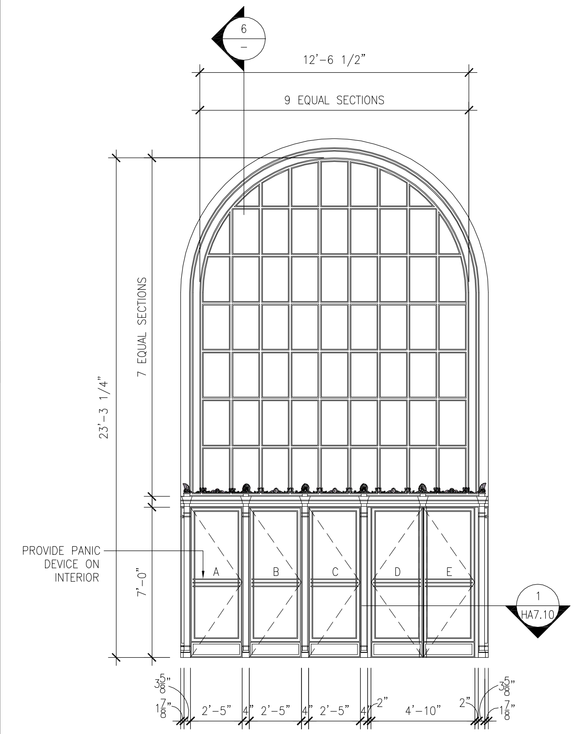

SPRING STEET ELEVATION

NEW ELEVATION
12'-6 1/2" X 23'-3 1/4"
105

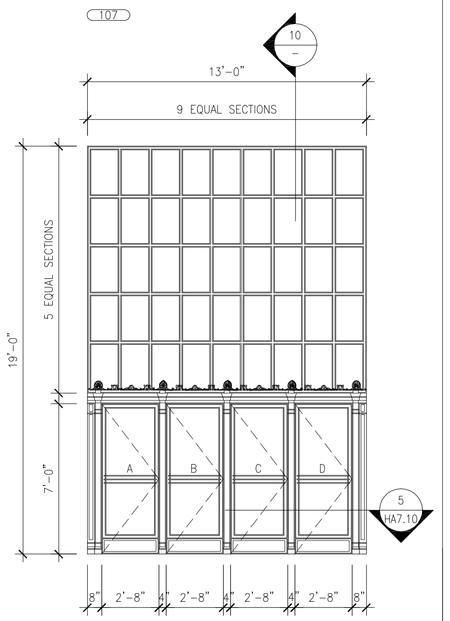

BROADWAY ELEVATION

HISTORIC ELEVATION
13'-0" X 19'-0"
106

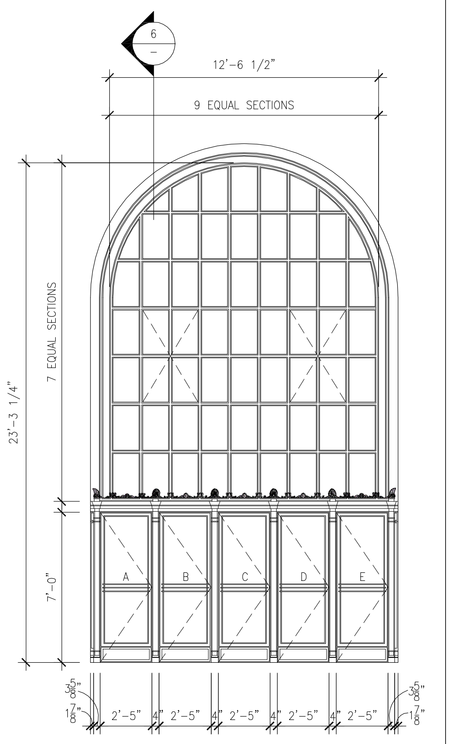

SPRING STEET ELEVATION

HISTORIC ELEVATION
12'-6 1/2" X 23'-3 1/4"
105

NOTE: REFER TO SHEET HA7.07 FOR GLAZING SCHEDULE

ENTRANCE FRAME ELEVATIONS | 1/4"=1'-0" | 1

NADEL
Architects Inc.

1990 So. Bundy Dr.
Fourth Floor
Los Angeles, CA 90025

T. 310.826.2100
F. 310.826.0182

www.nadelarc.com

CONSULTANT

NAKADA & ASSOCIATES

HISTORIC PRESERVATION ARCHITECT

COUNTY OF LOS ANGELES
THE HALL OF JUSTICE
STRUCTURAL RETROFIT PHASE

REVISIONS

DRAWING TITLE

TYPICAL ENTRANCE FRAME ELEVATIONS AND DETAILS

SCALE : VARIES
DATE :
JOB NO :
SHEET NO.

HA7.09

SCOPING DOCUMENTS | 100% SUBMISSION | AUGUST 2010

ALL DRAWINGS AND WRITTEN MATERIAL APPEARING HEREIN CONSTITUTE THE ORIGINAL AND UNPUBLISHED WORK OF THE ARCHITECT AND THE SAME MAY NOT BE DUPLICATED, USED OR DISCLOSED WITHOUT THE WRITTEN CONSENT OF THE ARCHITECT. COPYRIGHT: NADEL ARCHITECTS INC. ALL RIGHTS RESERVED.

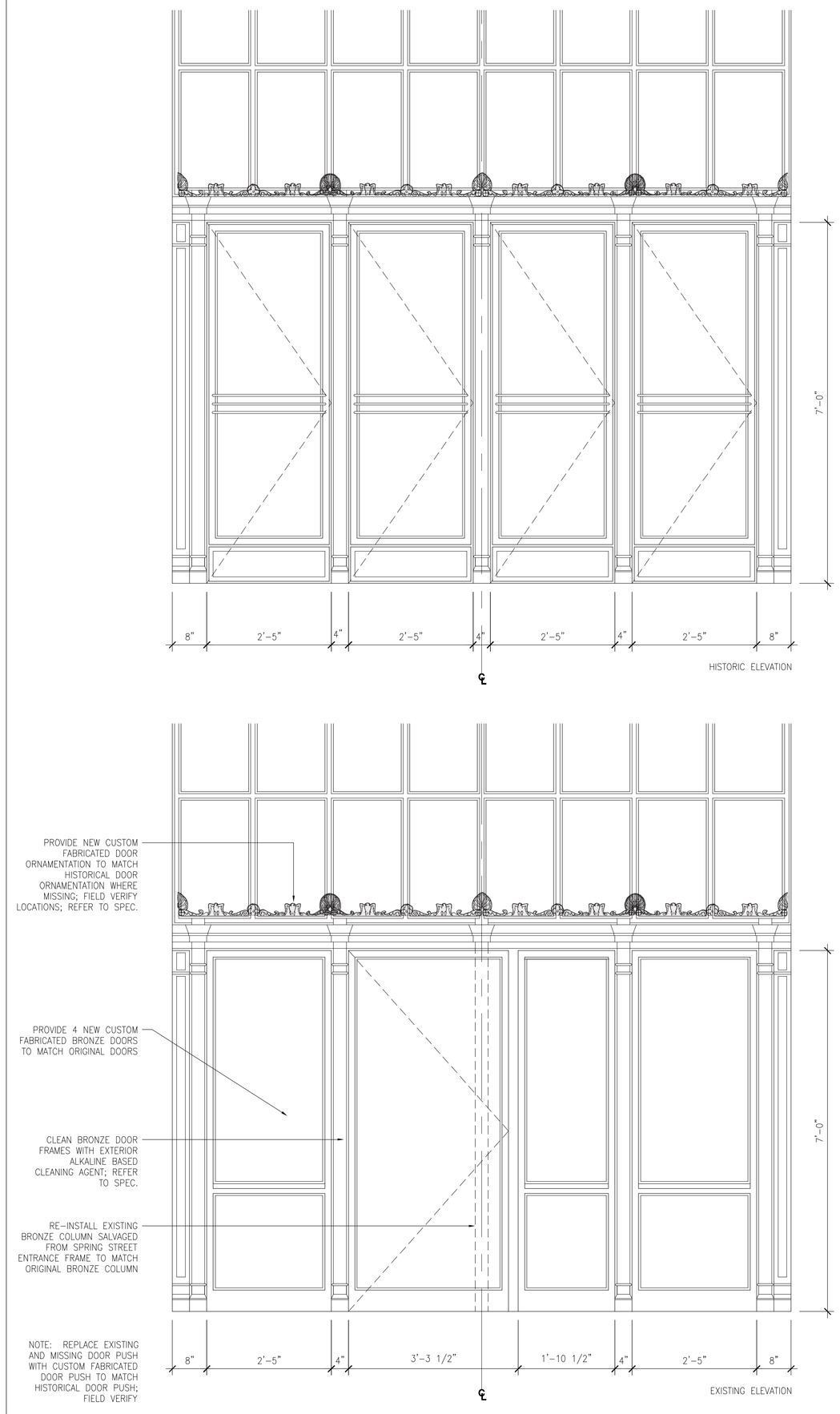

TEMPLE STREET ENTRANCE FRAME ENLARGED ELEVATION | 3/4"=1'-0" | 10

TEMPLE STREET ENTRANCE FRAME ENLARGED ELEVATION | 3/4"=1'-0" | 9

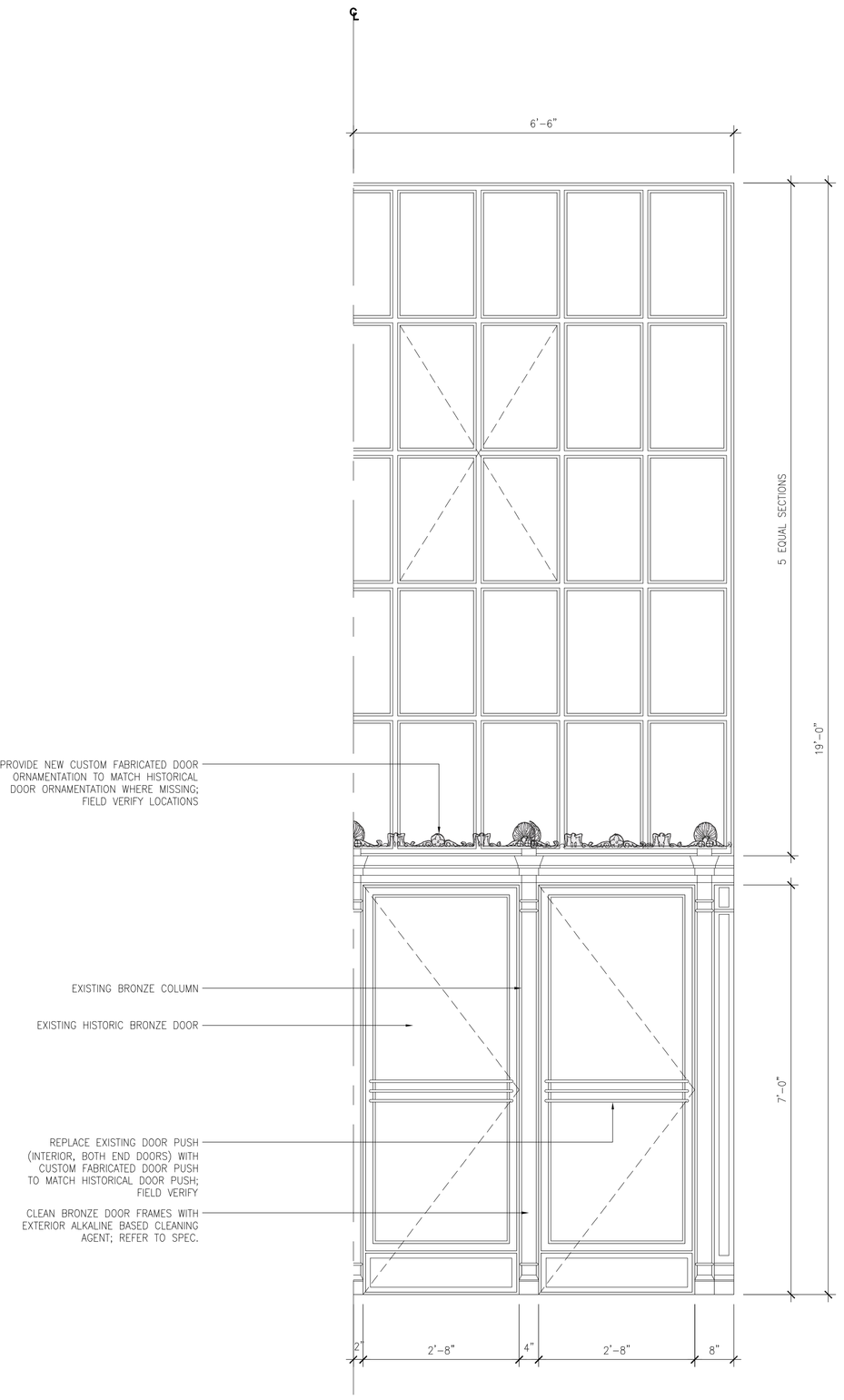

BROADWAY ENTRANCE FRAME ENLARGED ELEVATION | 3/4"=1'-0" | 6

BROADWAY ENTRANCE FRAME ENLARGED PLAN | 3/4"=1'-0" | 5

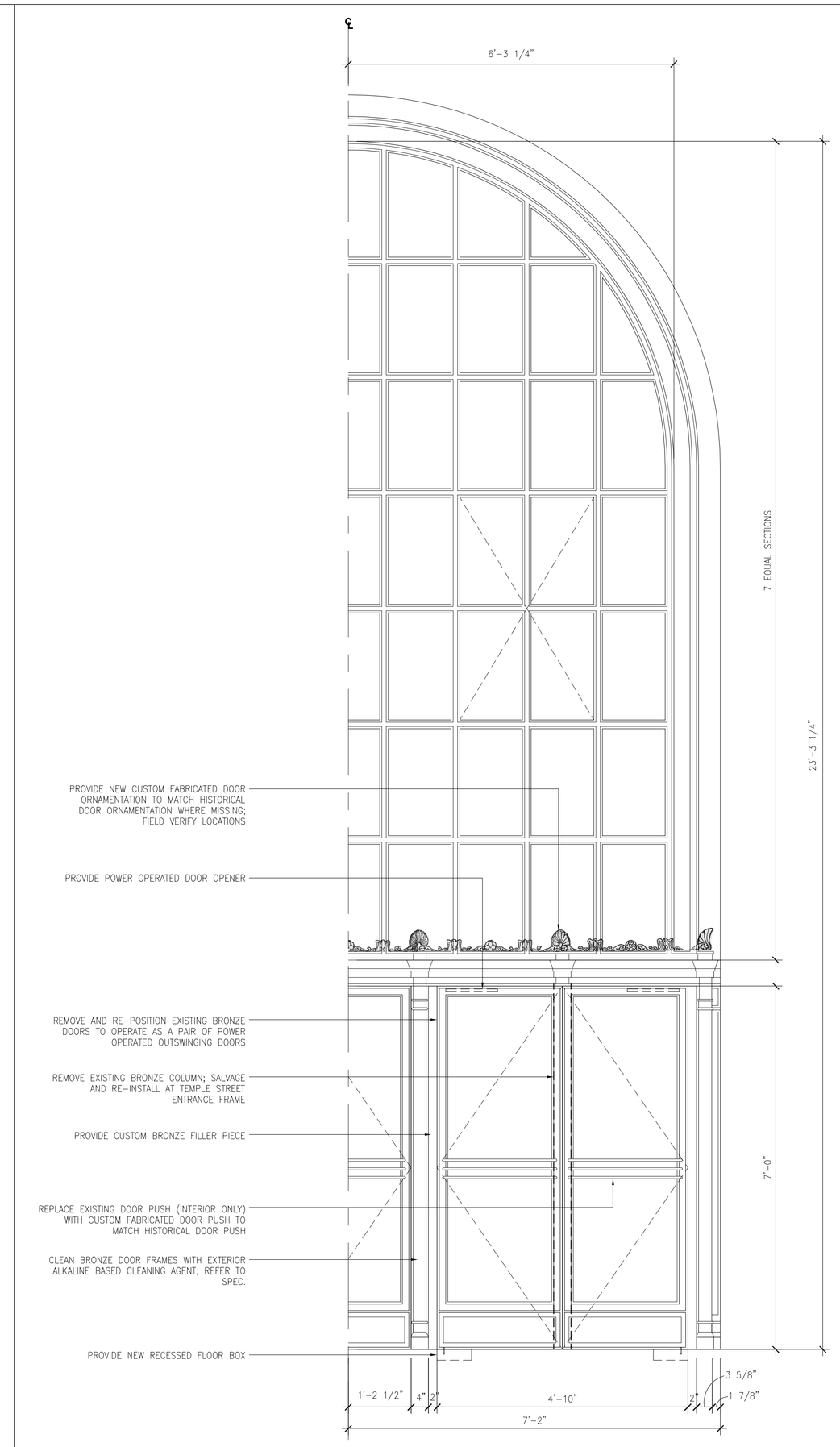

SPRING STREET ENTRANCE FRAME ENLARGED ELEVATION | 3/4"=1'-0" | 2

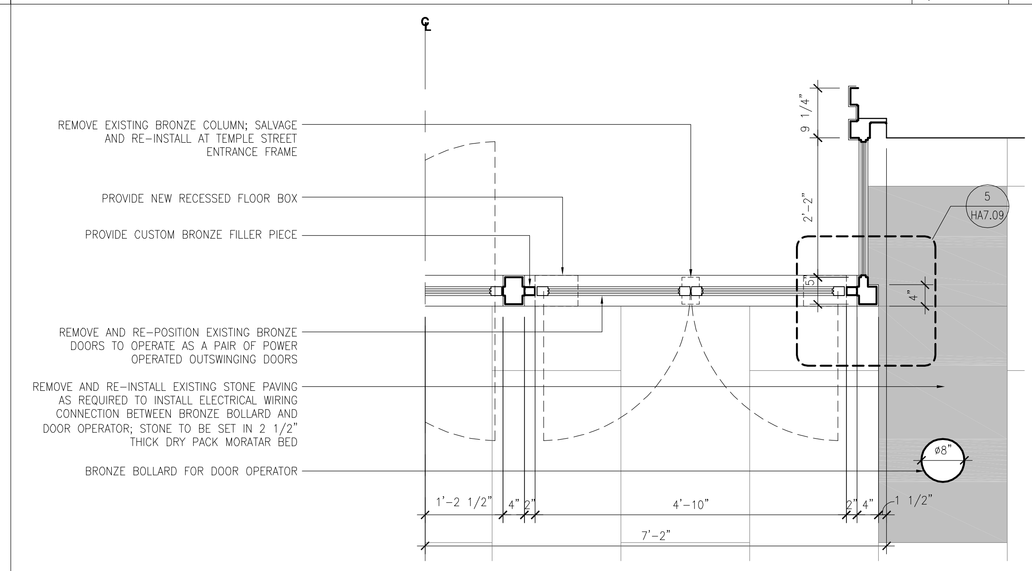

SPRING STREET ENTRANCE FRAME ENLARGED PLAN | 3/4"=1'-0" | 1

NADEL
Architects Inc.

1990 So. Bundy Dr.
Fourth Floor
Los Angeles, CA 90025

T. 310.826.2100
F. 310.826.0182

www.nadelarc.com

CONSULTANT

NAKADA
&
ASSOCIATES

HISTORIC PRESERVATION ARCHITECT

COUNTY OF LOS ANGELES
THE HALL OF JUSTICE
STRUCTURAL RETROFIT PHASE

REVISIONS

1	
2	
3	
4	
5	
6	

DRAWING TITLE

ENALRGED ENTRANCE FRAME ELEVATIONS AND DETAILS

SCALE : 3/4"=1'-0"
DATE :
JOB NO :
SHEET NO.

HA7.10

SCOPING DOCUMENTS 100% SUBMISSION AUGUST 2010

ALL DRAWINGS AND WRITTEN MATERIAL APPEARING HEREIN CONSTITUTE THE ORIGINAL AND UNPUBLISHED WORK OF THE ARCHITECT AND THE SAME MAY NOT BE DUPLICATED, USED OR DISCLOSED WITHOUT THE WRITTEN CONSENT OF THE ARCHITECT. COPYRIGHT: NADEL ARCHITECTS INC. ALL RIGHTS RESERVED.

HALL OF JUSTICE DOOR SCHEDULE

DOOR								FRAME					
NUMBER	TYPE	WIDTH	HEIGHT	THICKNESS	MATERIAL	FINISH	HDWR GROUP	FRAME ELEV	MAT'L	DOOR FRAME LABEL	DETAIL REFERENCES	DOOR NOTES	NOTES
105A	C	2'-5"	7'-0"	–	BRONZE	BRONZE	2	–	BRONZE	–	–	–	1, 6
105B	C	2'-5"	7'-0"	–	BRONZE	BRONZE	2	–	BRONZE	–	–	–	1
105C	C	2'-5"	7'-0"	–	BRONZE	BRONZE	2	–	BRONZE	–	–	–	1
105D	C	2'-5"	7'-0"	–	BRONZE	BRONZE	2	–	BRONZE	–	–	–	1, 5
105E	D	2'-5"	7'-0"	–	BRONZE	BRONZE	2	–	BRONZE	–	–	–	1, 5, 3
106A	D	2'-8"	7'-0"	–	BRONZE	BRONZE	2	–	BRONZE	–	–	–	1, 3, 4, 6
106B	C	2'-8"	7'-0"	–	BRONZE	BRONZE	2	–	BRONZE	–	–	–	1
106C	C	2'-8"	7'-0"	–	BRONZE	BRONZE	2	–	BRONZE	–	–	–	1
106D	D	2'-8"	7'-0"	–	BRONZE	BRONZE	2	–	BRONZE	–	–	–	1, 3
107A	D	2'-5"	7'-0"	–	BRONZE	BRONZE	1	–	BRONZE	–	–	–	2, 3, 6
107B	D	2'-5"	7'-0"	–	BRONZE	BRONZE	1	–	BRONZE	–	–	–	2, 3
107C	D	2'-5"	7'-0"	–	BRONZE	BRONZE	1	–	BRONZE	–	–	–	2, 3
107D	D	2'-5"	7'-0"	–	BRONZE	BRONZE	1	–	BRONZE	–	–	–	2, 3
–	–	–	–	–	–	–	–	–	–	–	–	–	–
–	–	–	–	–	–	–	–	–	–	–	–	–	–
–	–	–	–	–	–	–	–	–	–	–	–	–	–
–	–	–	–	–	–	–	–	–	–	–	–	–	–
–	–	–	–	–	–	–	–	–	–	–	–	–	–
–	–	–	–	–	–	–	–	–	–	–	–	–	–
–	–	–	–	–	–	–	–	–	–	–	–	–	–
–	–	–	–	–	–	–	–	–	–	–	–	–	–

DOOR SCHEDULE | 3/4"=1'-0" | 11

NOTES:

GROUP 1: NEW BRONZE DOORS

1. CUSTOM BRONZE PUSH/PULL BAR TO MATCH HISTORIC (2 PER DOOR).
2. PROVIDE RECESSED PIVOT HINGE BOX.
3. CYLINDER LOCK SET; REFER TO SPECIFICATIONS.
4. PROVIDE ONE DOOR WITH VON DUPRIN EXIT PANIC BAR.

GROUP 2: EXISTING BRONZE DOORS

1. PROVIDE NEW CUSTOM BRONZE PUSH/PULL TO MATCH EXISTING HISTORIC PUSH/PULL AS NOTED ON DRAWING.
2. ALL OTHER HARDWARE TO BE REVISED
3. PROVIDE ONE DOOR WITH A VON DUPRIN EXIT PANIC BAR.

HARDWARE SPECIFICATIONS | 13

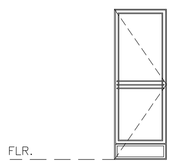

DOOR Type-C
BRONZE / GLASS

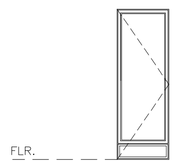

DOOR Type-D
BRONZE / GLASS

BRONZE DOOR TYPES | 1/4"=1'-0" | 12

NOTES:

1. EXISTING BRONZE DOOR.
2. NEW CUSTOM FABRICATED BRONZE DOOR TO MATCH HISTORIC DOOR. PROVIDE FOR NEW TEMPERED GLAZING TO BE INSTALLED.
3. NEW CUSTOM FABRICATED DOOR PUSH
4. REMOVE DAMAGED OR BROKEN EXISTING GLAZING AND PROVIDE NEW GLAZING TO MATCH.
5. REMOVE AND REPOSITION EXISTING BRONZE DOORS TO OPERATE AS A PAIR OF POWER OPERATED OUTSWINGING DOORS.
6. PROVIDE VON DUPRIN EXIT PANIC BAR.

GENERAL DOOR NOTES | 9

- | 1/4"=1'-0" | 10

DOOR DETAILS | 1

NADEL
Architects Inc.

1990 So. Bundy Dr.
Fourth Floor
Los Angeles, CA 90025

T. 310.826.2100
F. 310.826.0182

www.nadelarc.com

CONSULTANT

NAKADA & ASSOCIATES

HISTORIC PRESERVATION ARCHITECT

COUNTY OF LOS ANGELES
THE HALL OF JUSTICE
STRUCTURAL RETROFIT PHASE

REVISIONS

1	
2	
3	
4	
5	
6	

DRAWING TITLE

DOOR SCHEDULE

SCOPING DOCUMENTS 100% SUBMISSION AUGUST 2010

SCALE : VARIES
DATE :
JOB NO :
SHEET NO.

HA7.11

ALL DRAWINGS AND WRITTEN MATERIAL APPEARING HEREIN CONSTITUTE THE ORIGINAL AND UNPUBLISHED WORK OF THE ARCHITECT AND THE SAME MAY NOT BE DUPLICATED, USED OR DISCLOSED WITHOUT THE WRITTEN CONSENT OF THE ARCHITECT. COPYRIGHT: NADEL ARCHITECTS INC. ALL RIGHTS RESERVED.

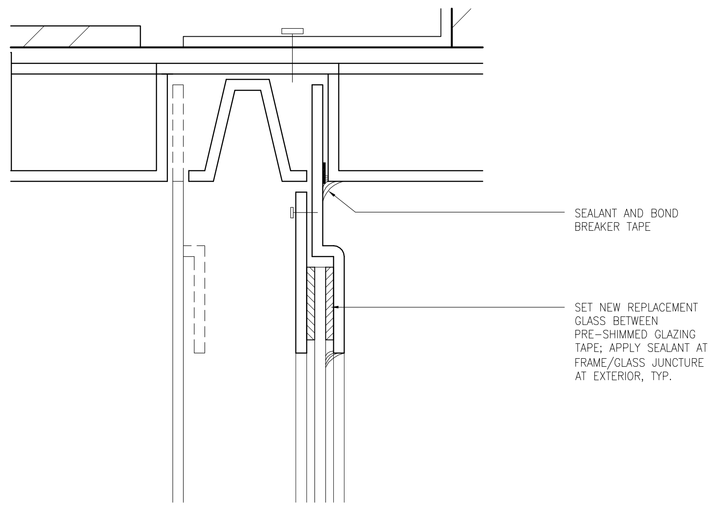

TYPICAL NEW GLASS SEALANT DETAIL | FULL SCALE | 16

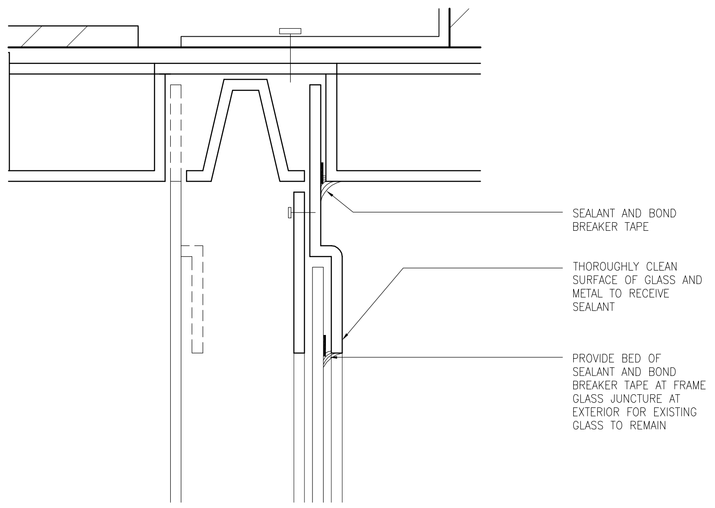

TYPICAL EXISTING GLASS SEALANT DETAIL | FULL SCALE | 12

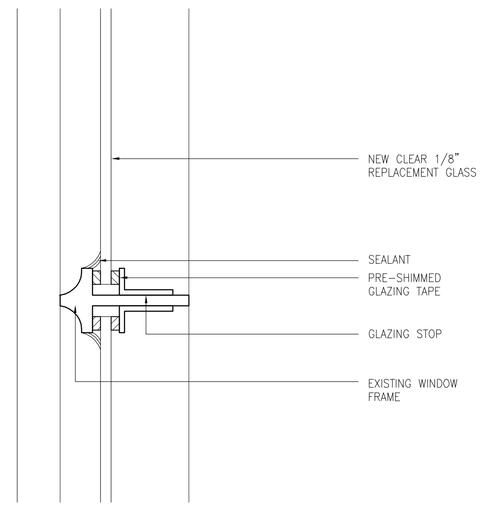

TYPICAL NEW GLASS SEALANT DETAIL | FULL SCALE | 8

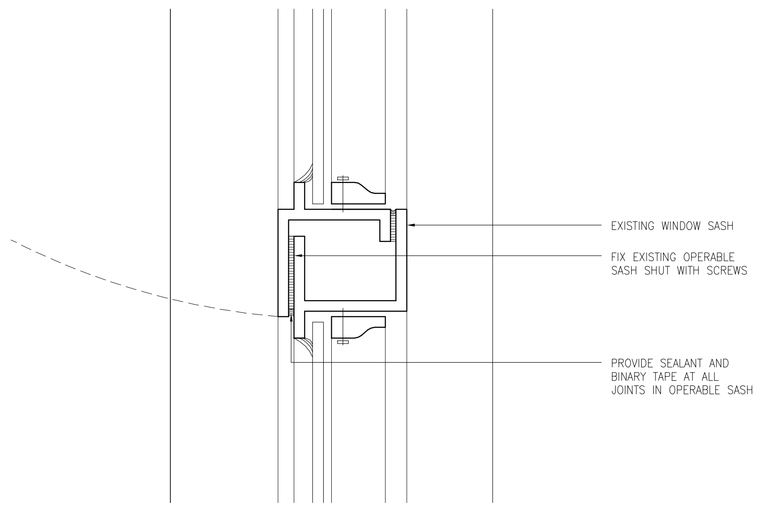

TYICAL OPERABLE SASH SEALANT DETAIL | FULL SCALE | 4

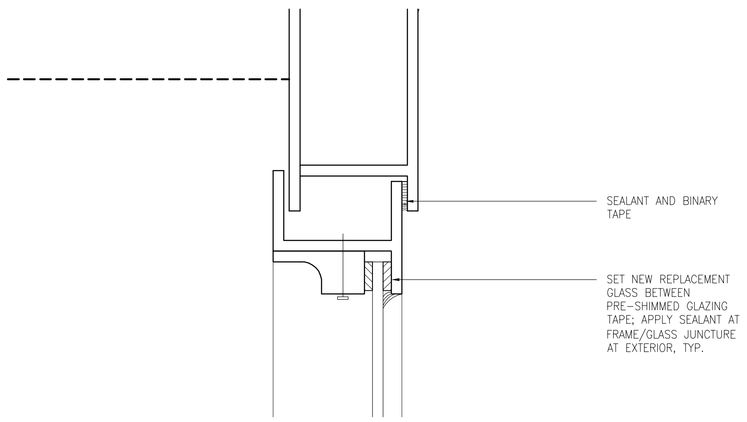

TYPICAL NEW GLASS SEALANT DETAIL | FULL SCALE | 15

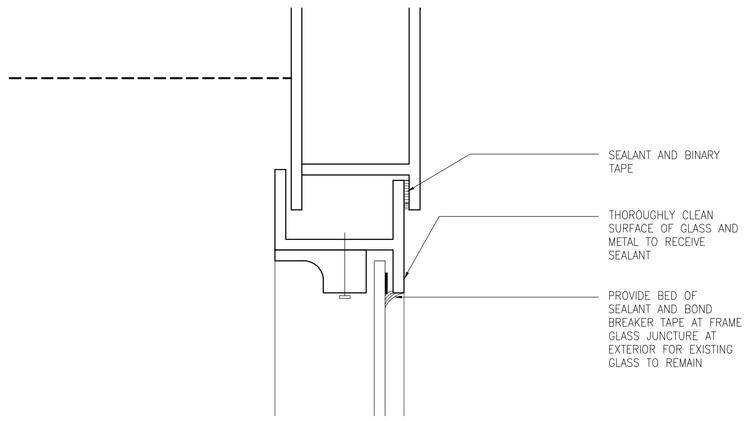

TYPICAL EXISTING GLASS SEALANT DETAIL | FULL SCALE | 11

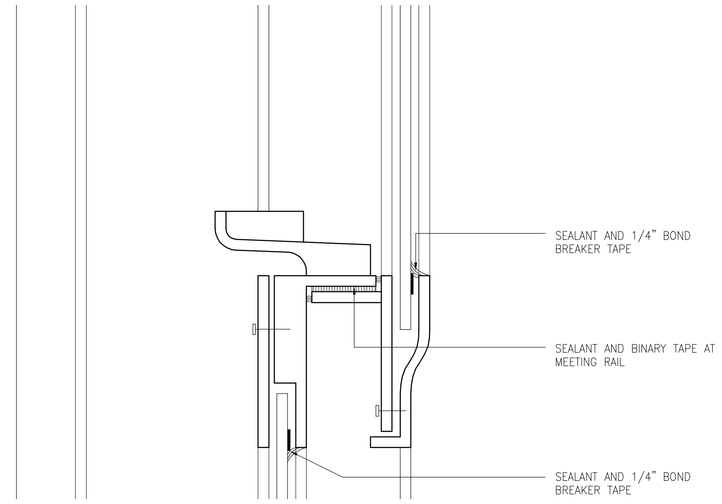

TYPICAL MEETING RAIL SEALANT DETAIL | FULL SCALE | 7

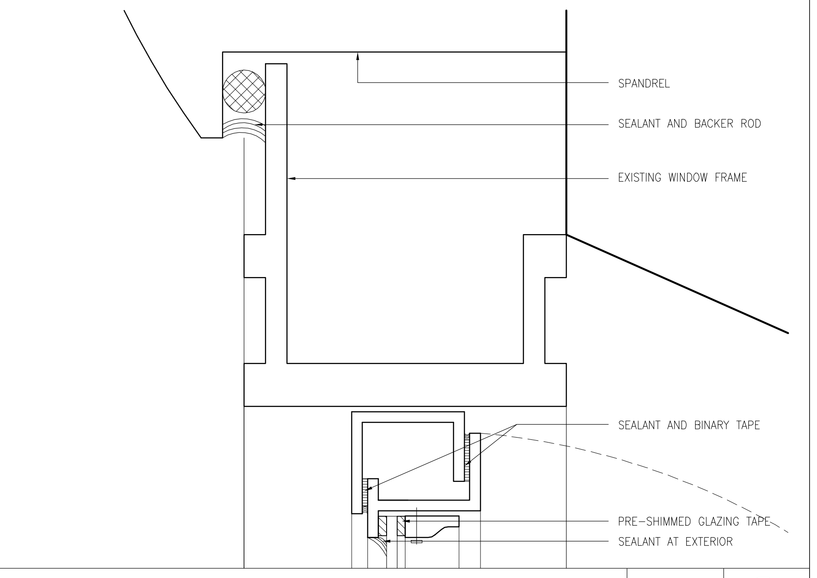

TYPICAL WINDOW FRAME SEALANT DETAIL | FULL SCALE | 3

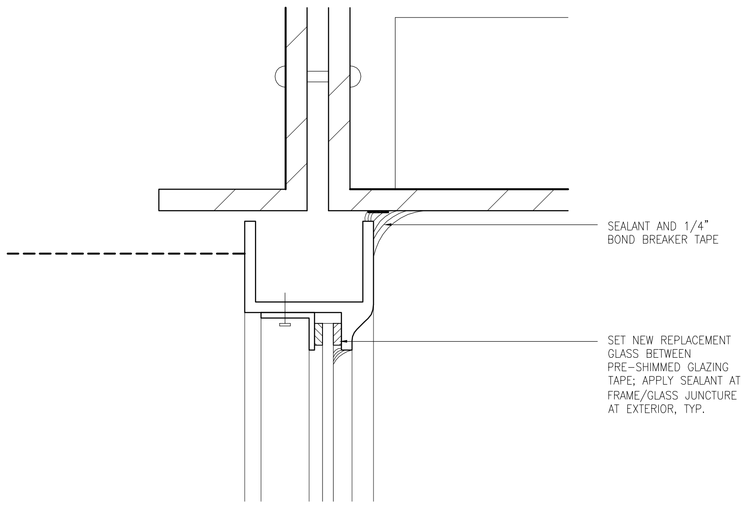

TYPICAL NEW GLASS SEALANT DETAIL | FULL SCALE | 14

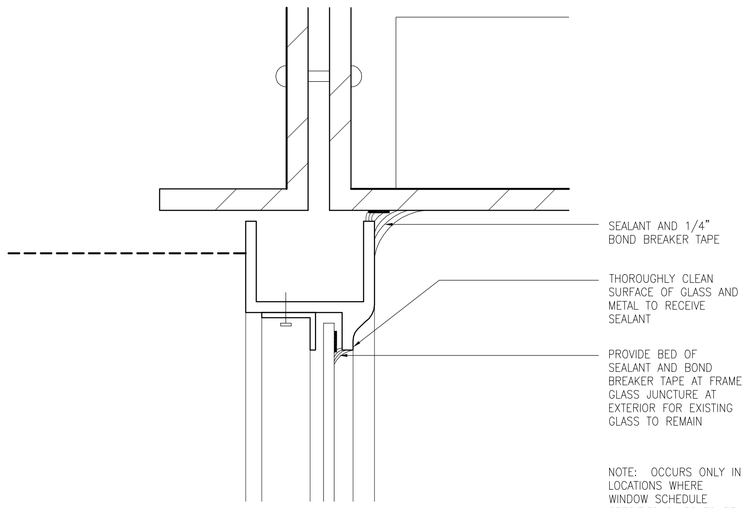

TYPICAL EXISTING GLASS SEALANT DETAIL | FULL SCALE | 10

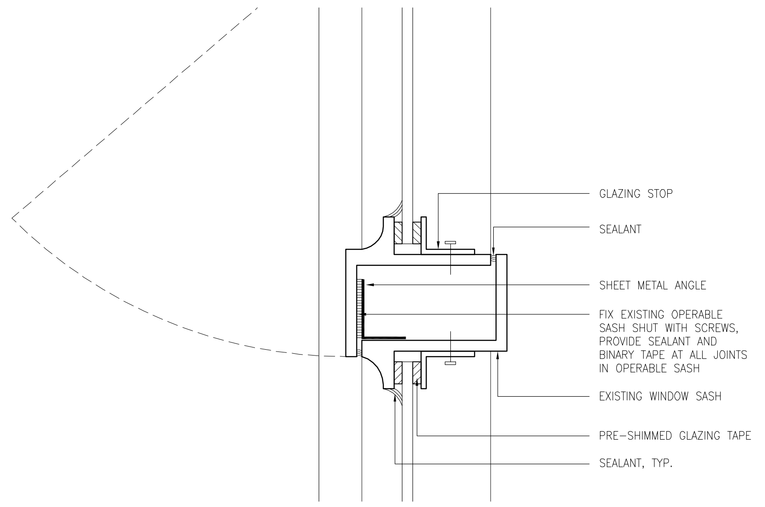

TYPICAL OPERABLE SASH SEALANT DETAIL | FULL SCALE | 6

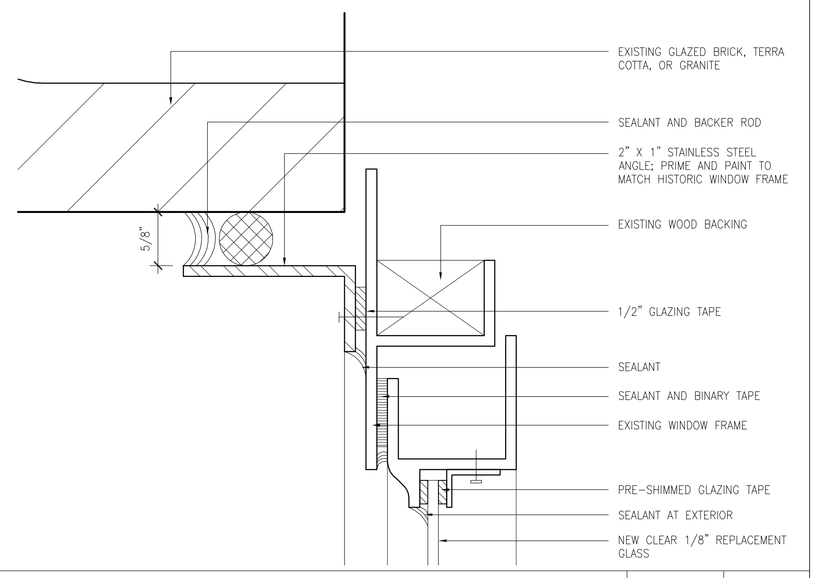

TYPICAL WINDOW FRAME SEALANT DETAIL | FULL SCALE | 2

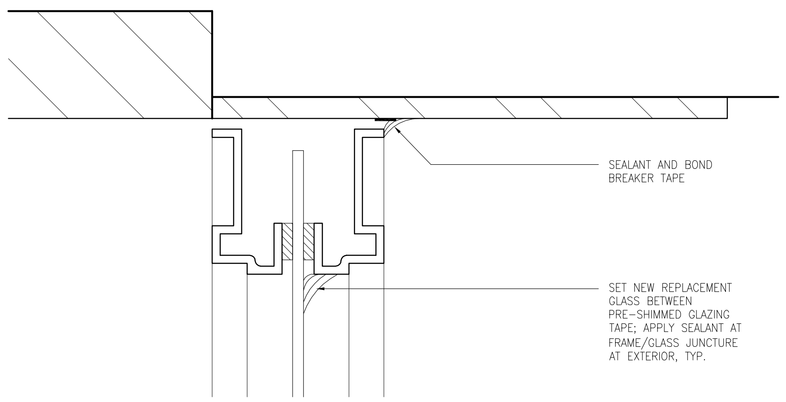

TYPICAL NEW GLASS SEALANT DETAIL | FULL SCALE | 13

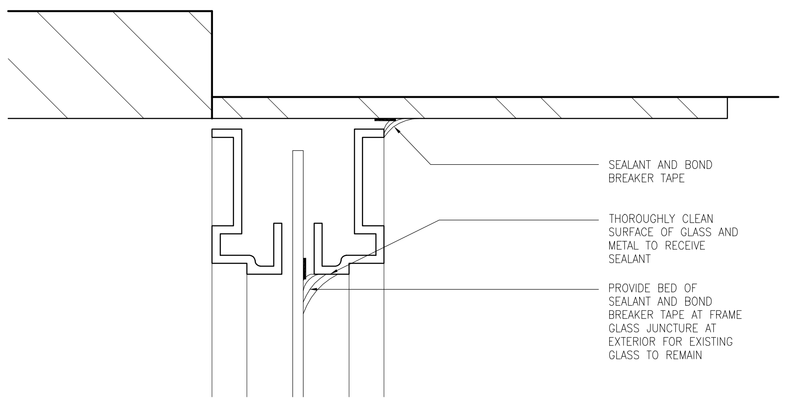

TYPICAL EXISTING GLASS SEALANT DETAIL | FULL SCALE | 9

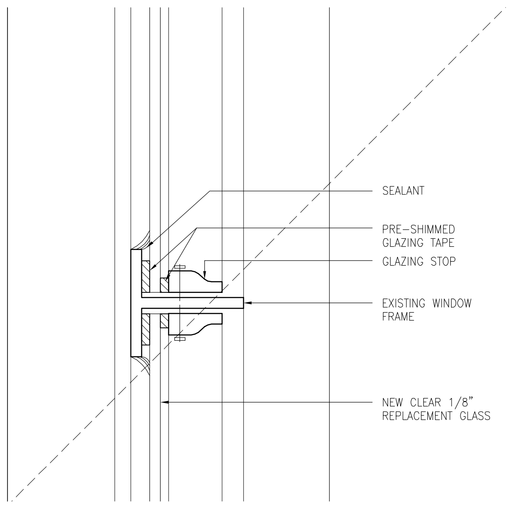

TYPICAL NEW GLASS SEALANT DETAIL | FULL SCALE | 5

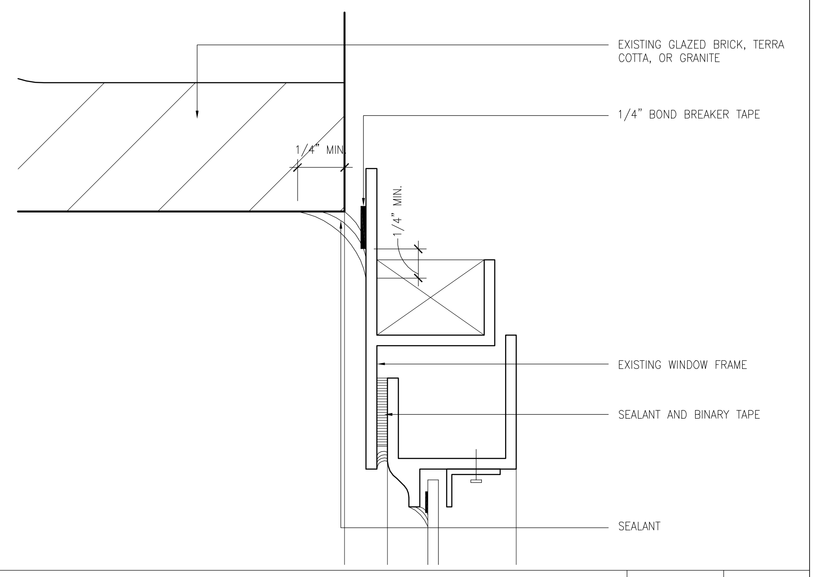

TYPICAL WINDOW FRAME SEALANT DETAIL | FULL SCALE | 1

NADEL
Architects Inc.

1990 So. Bundy Dr.
Fourth Floor
Los Angeles, CA 90025

T. 310.826.2100
F. 310.826.0182

www.nadelarc.com

CONSULTANT

NAKADA & ASSOCIATES

HISTORIC PRESERVATION ARCHITECT

COUNTY OF LOS ANGELES

THE HALL OF JUSTICE

STRUCTURAL RETROFIT PHASE

REVISIONS

△	
△	
△	
△	
△	
△	

DRAWING TITLE

WINDOW WATERPROOFING & SEALANT DETAILS

SCOPING DOCUMENTS 100% SUBMISSION AUGUST 2010

SCALE : FULL SCALE
DATE :
JOB NO :
SHEET NO.

HA7.12

ALL DRAWINGS AND WRITTEN MATERIAL APPEARING HEREIN CONSTITUTE THE ORIGINAL AND UNPUBLISHED WORK OF THE ARCHITECT AND THE SAME MAY NOT BE DUPLICATED, USED OR DISCLOSED WITHOUT THE WRITTEN CONSENT OF THE ARCHITECT. COPYRIGHT: NADEL ARCHITECTS INC. ALL RIGHTS RESERVED.

-	FULL SCALE	16	-	FULL SCALE	12	TYPICAL NEW GLASS SEALANT DETAIL	FULL SCALE	8	TYPICAL EXISTING GLASS SEALANT DETAIL	FULL SCALE	4
-	FULL SCALE	15	-	FULL SCALE	11	-	FULL SCALE	7	TYPICAL OPERABLE SASH SEALANT DETAIL	FULL SCALE	3
-	FULL SCALE	14	-	FULL SCALE	10	-	FULL SCALE	6	TYPICAL WINDOW FRAME SEALANT DETAIL	FULL SCALE	2
-	FULL SCALE	13	-	FULL SCALE	9	-	FULL SCALE	5	TYPICAL OPERABLE SASH SEALANT DETAIL	FULL SCALE	1

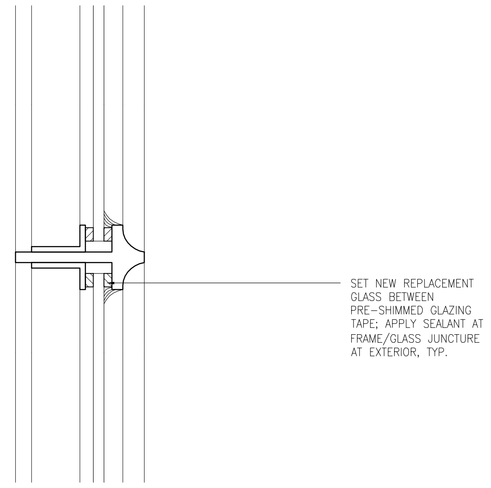

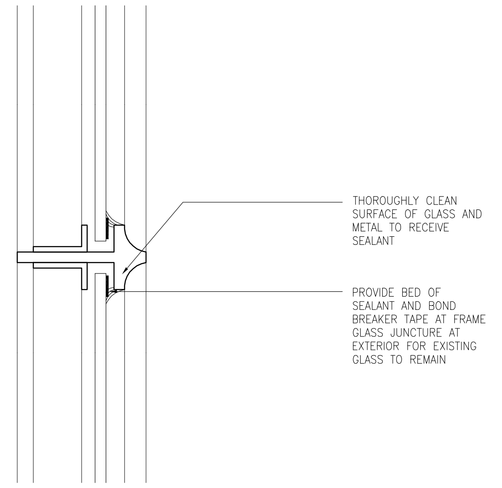

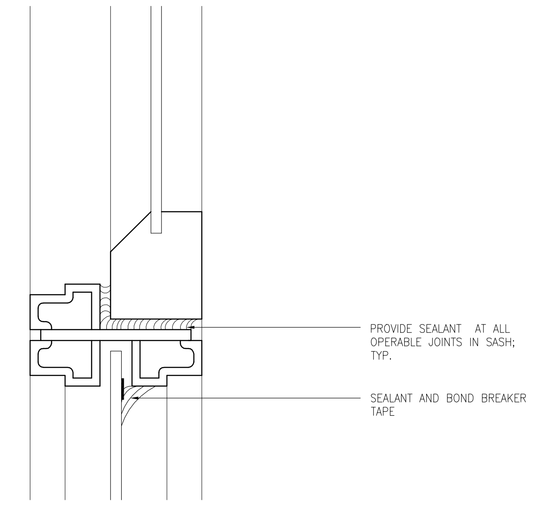

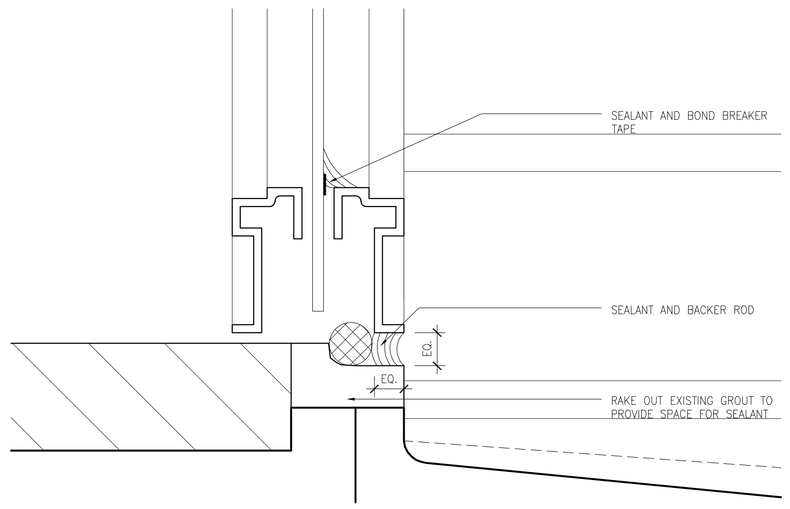

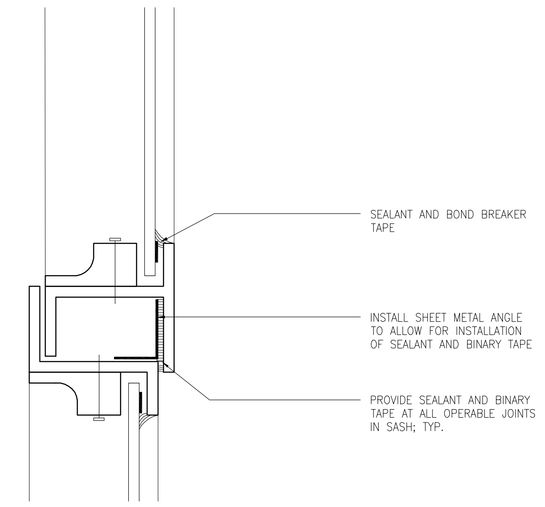

NADEL
Architects Inc.

1990 So. Bundy Dr.
Fourth Floor
Los Angeles, CA 90025

T. 310.826.2100
F. 310.826.0182

www.nadelarc.com

CONSULTANT

NAKADA
&
ASSOCIATES

HISTORIC PRESERVATION ARCHITECT

COUNTY OF LOS ANGELES

THE HALL OF JUSTICE

STRUCTURAL RETROFIT PHASE

REVISIONS

△	
△	
△	
△	
△	
△	

DRAWING TITLE

WINDOW WATERPROOFING & SEALANT DETAILS

SCOPING DOCUMENTS 100% SUBMISSION AUGUST 2010

SCALE : FULL SCALE
DATE :
JOB NO :
SHEET NO.

HA7.13

ALL DRAWINGS AND WRITTEN MATERIAL APPEARING HEREIN CONSTITUTE THE ORIGINAL AND UNPUBLISHED WORK OF THE ARCHITECT AND THE SAME MAY NOT BE DUPLICATED, USED OR DISCLOSED WITHOUT THE WRITTEN CONSENT OF THE ARCHITECT. COPYRIGHT: NADEL ARCHITECTS INC. ALL RIGHTS RESERVED.

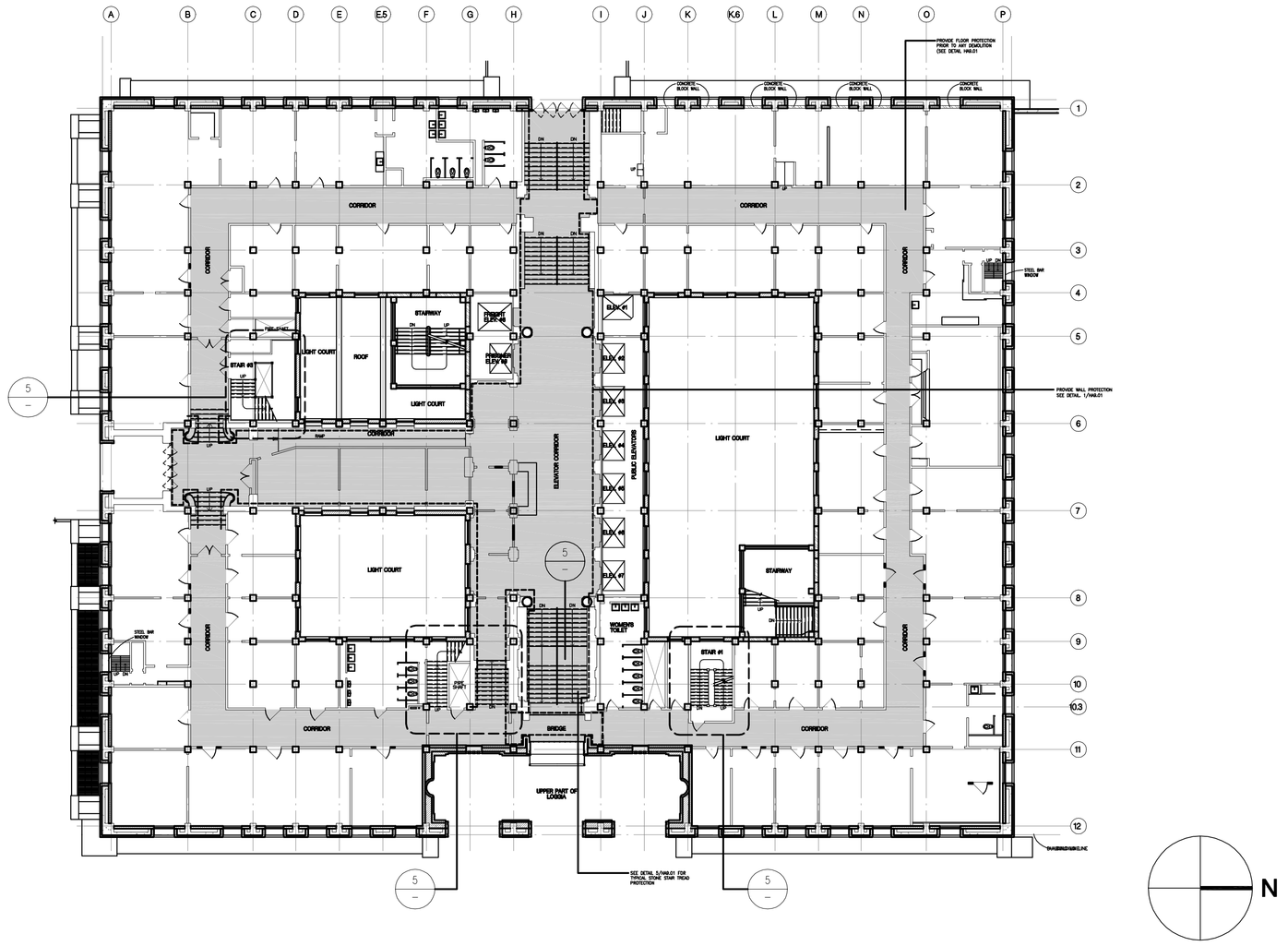

19 2ND FLOOR KEY PLAN / HISTORIC FABRIC PROTECTION PLAN.

0 10' 20' 40'
SCALE: 1"=20'

11 8TH FLOOR KEY PLAN / HISTORIC FABRIC PROTECTION PLAN.

0 10' 20' 40'
SCALE: 1"=20'

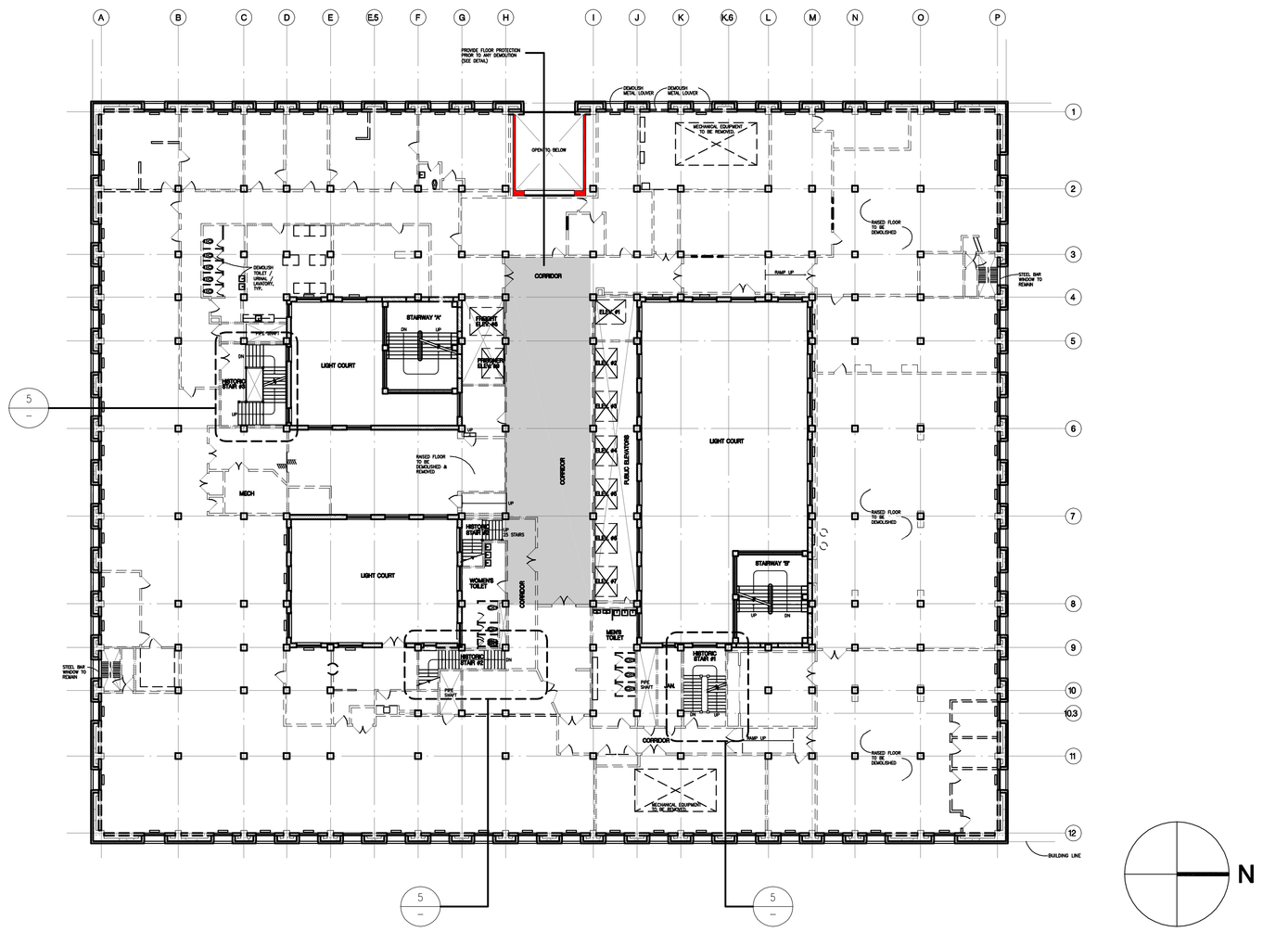

17 3RD - 9TH FLOOR KEY PLAN / HISTORIC FABRIC PROTECTION PLAN.

0 10' 20' 40'
SCALE: 1"=20'

MAINTAIN EXISTING HISTORIC FABRIC PROTECTION THROUGHOUT SEISMIC PHASE FOR THE PROTECTION OF FLOORS, WALLS, STAIRS ON LEVELS 2 - 8 AS SHOWN ON PLANS 19/HA9.01 ; 11/HA9.01 ; 17/HA9.01

CONTRACTOR SHALL REPLACE FLOOR, WALL, AND STAIR PROTECTION AS NOTED ON LEVELS 2 - 8 AT THE END OF SEISMIC PHASE AS SHOWN ON PLANS 19/HA9.01 ; 11/HA9.01 ; 17/HA9.01

EXISTING FLOOR PROTECTION: AREAS TONE ON NOTED PLANS REFER TO DETAIL 1/HA9.01 FOR FLOOR PROTECTION.

EXISTING WALL PROTECTION: AREAS WITH DASH LINES ON NOTED PLANS REFER TO DETAIL 1/ A9.01 FOR WALL PROTECTION.

EXISTING STAIR TREAD PROTECTION: REFER TO DETAIL 5/HA9.01

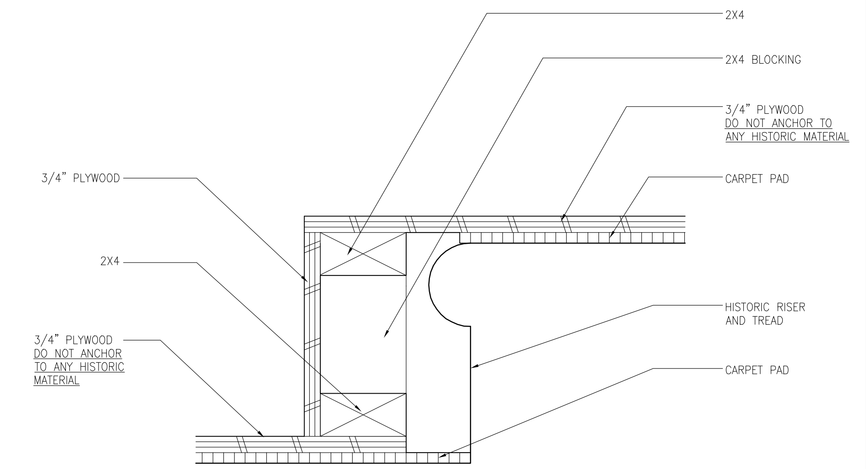

5 EXISTING TYPICAL STAIR TREAD PROTECTION

0 1" 2" 3" 6'
SCALE: 3"=1'-0"

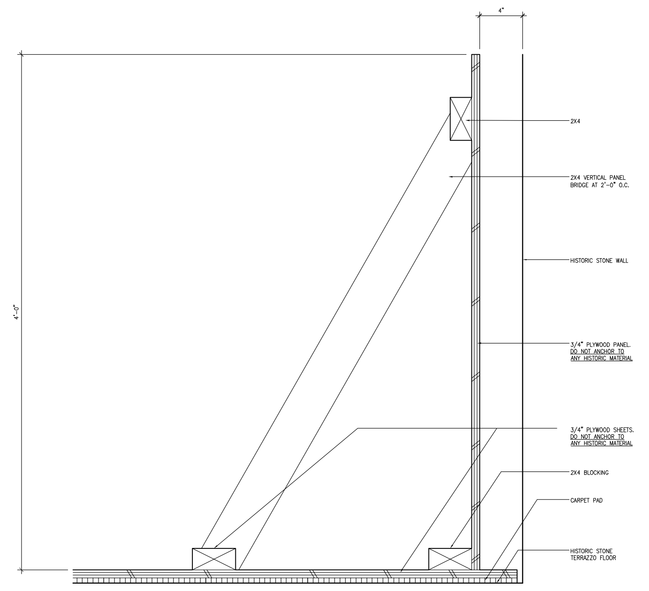

1 EXISTING TYPICAL FLOOR AND WALL PROTECTION DETAIL

0 3" 6' 1'
SCALE: 1 1/2"=1'-0"

NADEL
Architects Inc.

1990 So. Bundy Dr.
Fourth Floor
Los Angeles, CA 90025

T. 310.826.2100
F. 310.826.0182

www.nadelarc.com

CONSULTANT

NAKADA
&
ASSOCIATES

HISTORIC PRESERVATION ARCHITECT

COUNTY OF LOS ANGELES
THE HALL OF JUSTICE
STRUCTURAL RETROFIT PHASE

REVISIONS

DRAWING TITLE

KEY PLAN

SCALE :
DATE :
JOB NO :
SHEET NO.

HA9.01

SCOPING DOCUMENTS 100% SUBMISSION AUGUST 2010

ALL DRAWINGS AND WRITTEN MATERIAL APPEARING HEREIN CONSTITUTE THE ORIGINAL AND UNPUBLISHED WORK OF THE ARCHITECT AND THE SAME MAY NOT BE DUPLICATED, USED OR DISCLOSED WITHOUT THE WRITTEN CONSENT OF THE ARCHITECT. COPYRIGHT: NADEL ARCHITECTS INC. ALL RIGHTS RESERVED.

STRUCTURAL STEEL

1. DETAIL, FABRICATE AND ERECT STRUCTURAL STEEL IN ACCORDANCE WITH THE AISC SPECIFICATIONS FOR STRUCTURAL STEEL BUILDINGS (LATEST EDITION AND SUPPLEMENTS). STEEL FABRICATION SHALL BE DONE IN A SHOP OF AN APPROVED FABRICATOR HOLDING A CERTIFICATE OF APPROVAL FROM THE CITY OF LOS ANGELES OR EQUAL. A CERTIFICATE OF FABRICATION FROM THE SHOP PERFORMING THE WELDING OR A REPORT FROM A COUNTY OF LOS ANGELES CERTIFIED SPECIAL INSPECTOR MUST BE FURNISHED TO THE JOB INSPECTOR PRIOR TO FRAMING APPROVAL. ALL FIELD WELDING SHALL BE PERFORMED BY CERTIFIED WELDERS AND CONTINUOUSLY INSPECTED.

2. ALL STRUCTURAL STEEL, UNLESS NOTED OTHERWISE SHALL BE ASTM A–572, GRADE 50. ALL STRUCTURAL STEEL W SECTIONS SHALL BE A992.

3. STEEL ANGLES AND CHANNELS SHALL BE ASTM A36 OR ASTM A572, GRADE 50.

4. STRUCTURAL TUBING SHALL CONFORM TO ASTM A–500 GRADE B. (Fy=46,000 PSI)

5. STRUCTURAL PIPING SHALL CONFORM TO ASTM A–53 GRADE B. (Fy=35,000 PSI)

6. WHEN FABRICATING BEAMS, PLACE NATURAL CAMBER UP.

7. BOLTED CONNECTIONS UNLESS NOTED OTHERWISE SHALL BE 7/8 INCH DIAMETER A325–X BOLTS.

8. PROVIDE HARDENED WASHERS UNDER NUTS AT ALL HIGH STRENGTH BOLTS, EXCEPT WHERE PLATE WASHERS ARE USED PER AISC SPECIFICATIONS.

9. HIGH STRENGTH BOLTS SHALL BE INSTALLED IN ACCORDANCE WITH "SPECIFICATIONS FOR STRUCTURAL JOINTS USING ASTM A–325 OR A490 BOLTS," AS APPROVED BY THE RESEARCH COUNCIL ON RIVETED AND BOLTED JOINTS OF THE ENGINEERING FOUNDATION, NOVEMBER 13, 1985.

10. PROVIDE FILLS AT SPLICES OF PARTS HAVING MORE THAN 1/8" DIFFERENCE IN THICKNESS.

11. PROVIDE BEVELED WASHERS ON ALL CONNECTIONS TO SLOPING FLANGES OF I SECTIONS AND CHANNELS WHERE SLOPE EXCEED 1:20

12. BOLT HOLES IN STEEL SHALL BE "STANDARD" (1/16 INCH LARGER IN DIAMETER THAN THE NOMINAL BOLT SIZE, UNLESS NOTED OTHERWISE).

13. LENGTHS OF WELDS SHOWN ARE EFFECTIVE LENGTHS AS SPECIFIED IN THE LACBC. WHERE LENGTH OF WELD IS NOT SHOWN, IT SHALL BE FULL LENGTH OF JOINT. ALL BUTT WELDS SHALL BE FULL PENETRATION UNLESS NOTED OTHERWISE.

14. WHERE MINIMUM AISC FILLET WELD THICKNESS REQUIREMENT EXCEEDS WELDS SHOWN ON DETAILS, PROVIDE MINIMUM AISC WELD.

15. ALL FLANGE STIFFENER PLATES AND CAP PLATES USED IN MOMENT CONNECTIONS SHALL BE ORIENTED SO THAT THE ROLLING DIRECTION OF THE PLATE IS PARALLEL WITH THE DIRECTION OF PRINCIPAL STRESS.

16. AFTER FABRICATION, ALL STEEL SHALL BE CLEANED FREE OF RUST, LOOSE MILL, SCALE AND OIL.

17. STRESSES OCCURING DURING FABRICATION, SHIPMENT, AND ERECTION SHALL BE TEMPORARY AND NOT EXCESSIVE. STRESSES AT ALL TIMES SHALL BE LESS THAN DESIGN AND ALLOWABLE STRESSES. THE FULL DESIGN AND LOAD CARRYING CAPACITY OF THE STEELWORK SHALL NOT BE IMPAIRED DUE TO FABRICATION, SHIPMENT, OR ERECTION PROCEDURES. THROUGHOUT THE COMPLETE PROCESS. THE STABILITY OF ALL INDIVIDUAL MEMBERS AND ASSEMBLIES SHALL BE MAINTAINED.

18. THE CONTRACTOR SHALL BE RESPONSIBLE FOR THE CONTROL OF ALL ERECTION PROCEDURES AND SEQUENCES WITH RELATION TO TEMPERATURE DIFFERENTIALS AND WELD SHRINKAGE.

19. ALL ADDITIONAL STEEL REQUIRED FOR ERECTION PURPOSES SHALL BE PROVIDED AT NO ADDITIONAL COST AND SHALL BE REMOVED UNLESS APPROVED BY THE OWNER IN WRITING.

20. MILL CERTIFICATIONS AND COUPON TESTS ARE REQUIRED TO VERIFY THE ACTUAL PROPERTIES OF STEEL SUPPLIED. COUPON TESTS SHALL BE PERFORMED BY A CERTIFIED INDEPENDENT TESTING LABORATORY. FOR ALL MEMBERS OF THE MOMENT RESISTING FRAMES, COUPON TEST MATERIAL SHALL BE SELECTED FROM THE FLANGES OF THE MEMBERS. THE FOLLOWING MEMBERS SHALL BE TESTED:

A. A MINIMUM OF FIVE PERCENT (IN NUMBER OF MEMBERS) OF ALL MEMBERS OF THE MOMENT RESISTING FRAMES.

B. A MINIMUM OF ONE TEST FOR EACH SIZE OF BEAM AND EACH SIZE OF COLUMN USED IN THE MOMENT RESISTING FRAMES.

21. ALL ANCHOR BOLTS IN BASE PLATES WITH OVERSIZED HOLES SHALL HAVE 3–1/2" INCH SQUARE WASHER PLATES.
THICKNESS OF WASHER PLATE SHALL BE 0.375 TIMES THE DIAMETER OF THE ANCHOR BOLTS. PLATE WASHERS SHALL BE WELDED TO BASE PLATE WITH 5/16 INCH FILLET WELDS ALL SIDES.

22. WHERE NO SLAB IS INDICATED, TOP OF STEEL SHALL BE DEFINED AS THAT ELEVATION WHICH, MINUS THE CORRESPONDING DECK THICKNESS, PROVIDES A FLUSH FLOOR WITH EXISTING.

23. SUBMIT DEMOLITION PROCEDURE OF STRUCTURAL ELEMENTS REQUIRED FOR PERMIT, FOR REVIEW AND APPROVAL.

CONSTRUCTION PROCEDURE

1. ALL WALLS AND ALL FLOOR AND ROOF MEMBERS SHALL BE SECURELY SHORED AND BRACED AT ALL TIMES DURING CONSTRUCTION.

2. KEY AND DOWEL POUR JOINTS AS SHOWN ON THE PLANS. ANY DEVIATION FROM POUR JOINTS SHOWN ON THE PLANS MUST BE APPROVED BY THE ENGINEER AND THE BUILDING DEPARTMENT.

3. NO PIPES OR DUCTS SHALL BE EMBEDDED INTO STRUCTURAL MEMBERS UNLESS SO SHOWN ON THE PLANS OR APPROVED BY THE ENGINEER.

4. VERIFY ALL DIMENSIONS AND CONDITIONS ON THE JOB.

5. REFER TO ARCHITECTURAL PLANS FOR FLOOR DEPRESSIONS, OPENINGS, SLOPES, DRAINS, CURBS, PADS, EMBEDDED ITEMS, NON–BEARING PARTITIONS, STAIR HANGERS, ETC. REFER TO MECHANICAL AND ELECTRICAL PLANS FOR SLEEVES, OPENINGS, AND HANGERS FOR PIPES, DUCTS AND EQUIPMENT.

6. BEAMS AND SLABS UNDER WALL TERMINATING AT A FLOOR SHALL BE FULLY SHORED DURING AND AFTER WALL POUR UNTIL CONCRETE WALL ATTAINS DESIGN STRENGTH.

7. ANY DEVIATION FROM APPROVED SET OF STRUCTURAL DRAWINGS SHALL BE APPROVED BY THE ENGINEER AND THE BUILDING DEPARTMENT.

STRUCTURAL TESTS AND INSPECTION

1. SPECIAL INSPECTION IS REQUIRED PER LACBC SECTION 1701. SPECIAL INSPECTION IS REQUIRED FOR THE FOLLOWING WORK AS DESCRIBED IN LACBC SECTION 1701.5 :

A. ALL CONCRETE WORK.
B. BOLTS INSTALLED IN CONCRETE
C. EXPANSION AND ADHESIVE ANCHORS
D. REINFORCING STEEL
E. STRUCTURAL WELDING
F. EPOXY CRACK INJECTION
G. WELDING OF REINFORCING STEEL
H. HIGH STRENGTH BOLTING
I. INSULATING CONCRETE FILL
J. SPRAY APPLIED FIREPROOFING
K. SPECIAL GRADING, EXCAVATION, AND BACKFILLING
L. OTHER INSPECTION REQUIRED BY THE BUILDING OFFICIAL

FIREPROOFING

1. ALL STRUCTURAL STEEL MEMBERS, SHALL BE FIREPROOFED.

2. SEE ARCHITECTURAL PLANS AND SPECIFICATIONS FOR DETAILS OF FIREPROOFING.

STRUCTURAL ALLOWANCES

1. CONCRETE AND REINFORCING:

IN ADDITION TO ALL REINFORCED CONCRETE WORK SHOWN OR IMPLIED ON DOCUMENTS, ALLOW AN ADDITIONAL THREE (3) PERCENT OF STRUCTURAL CONCRETE AND REINFORCING, COMPLETE AND IN PLACE, AT VARIOUS LOCATIONS THROUGHOUT THE STRUCTURE. CREDIT BALANCE OF SCOPE ALLOWANCE.

ALLOW FOR A MINIMUM OF 3500 LIN. FT. OF EPOXY INJECTION OF CRACKS OF VARIOUS WIDTHS IN EXTERIOR WALLS, SPANDRELS, AND FLOORS DISTRIBUTED THROUGHOUT THE STRUCTURE. ALL CRACKS GREATER THAN 1/64 INCH IN WIDTH SHALL BE REPAIRED WITH SIMPSON ETI INJECTION EPOXY OR APPROVED EQUAL. ALL CRACKS SHALL BE SEALED FROM THE SURFACE PRIOR TO INJECTION. INJECTION OPERATIONS SHALL BE FROM BOTH SIDES OF THE CRACK.

PRE–ENGINEERED STRUCTURES AND ITEMS TO BE ANCHORED TO THE BUILDING

1. STRUCTURES SHALL BE DESIGNED BY OTHERS. PRIOR TO FABRICATION AND INSTALLATION, SUBMIT DESIGN PLANS, DETAILS AND CALCULATIONS, PERFORMED BY A CIVIL ENGINEER, LICENCED IN THE STATE OF CALIFORNIA TO THE ARCHITECT FOR REVIEW AND DEPARTMENT FOR REVIEW AND APPROVAL.

2. DESIGN STRUCTURES IN ACCORDANCE WITH THE LACBC, APPLICABLE SECTIONS OF THE AISI SPECIFICATIONS, AND THE MBMA RECOMMENDED DESIGN PRACTICE MANUAL.

3. CONNECTIONS OF THE STRUCTURES TO MAIN STRUCTURAL MEMBERS SHALL NOT RESULT IN TORSION IN THE SUPPORTING STRUCTURAL MEMBERS.

4. THE FOLLOWING STRUCTURE ITEMS ARE NOT COVERED BY THIS SET OF DRAWINGS AND SHALL BE DESIGNED BY OTHERS. CALCULATIONS AND DRAWINGS SIGNED BY A STRUCTURAL ENGINEER LICENSED IN THE STATE OF CALIFORNIA SHALL BE SUBMITTED TO THE ARCHITECT & ENGINEER FOR REVIEW AND TO THE COUNTY FOR APPROVAL.

A. ANCHORAGE FOR ALL ELECTRICAL AND MECHANICAL AND PLUMBING EQUIPMENT WITH WEIGHT OF 400 LBS OR MORE

5. THE DEFERRED SUBMITTALS ITEMS SHALL BE SUBMITTED TO THE ARCHITECT OR ENGINEER OF RECORD WHO SHALL REVIEW AND APPROVE THEM, AND FORWARD THEM TO THE BUILDING OFFICIAL WITH A NOTATION INDICATING THAT THE DEFERRED SUBMITTAL DOCUMENTS HAVE BEEN FOUND TO BE IN GENERAL CONFORMANCE WITH THE DESIGN OF THE BUILDING. THE DEFERRED SUBMITTAL ITEMS SHALL NOT BE INSTALLED UNTIL THEIR DESIGN AND SUBMITTAL DOCUMENTS HAVE BEEN APPROVED BY THE BUILDING OFFICIAL. PROVIDE AMPLE TIME FOR THE BUILDING OFFICIAL TO REVIEW THE DOCUMENTS.

REINFORCEMENT

1. ALL TYPICAL REINFORCING BARS SHALL CONFORM TO ASTM A–615, GRADE 60, UNLESS NOTED OTHERWISE ON THE DRAWINGS. ALL PRIMARY REINFORCING FOR MOMENT FRAME BEAMS AND COLUMNS SHALL BE ASTM A–706 [Fy=60 ksi]. SPIRALS SHALL BE COLD DRAWN BARS CONFORMING TO ASTM A–82.

2. WELDED REBAR TO COMPLY WITH ASTM A–706 [Fy=60 KSI] AND WELDINGS SHALL CONFORM TO AWS D1–4 AND RGA 3–77. WELDING TO BE DONE BY WELDERS CERTIFIED BY BUILDING DEPARTMENT FOR STRUCTURAL STEEL AND LIGHT GAUGE STEEL.

3. WELDED WIRE FABRIC SHALL BE MADE OF COLD DRAWN WIRE AND SHALL CONFORM TO ASTM A–185 [Fy=65 KSI]. MINIMUM LAP AT SPLICES OF 12 INCHES. PROVIDE MESH IN FLAT SHEETS ONLY. ROLLED MESH IS NOT ACCEPTABLE. OFFSET END–LAPS IN ADJACENT SHEETS TO PREVENT CONTINUOUS LAPS.

4. REINFORCING STEEL SHALL HAVE THE FOLLOWING MINIMUM COVERAGE. PLACE BARS AS NEAR TO THE CONCRETE SURFACE AS THESE MINIMUMS PERMIT WHEREVER POSSIBLE, UNLESS NOTED OTHERWISE:

CONCRETE POURED AGAINST EARTH	3"
FORMED CONCRETE IN CONTACT WITH EARTH	2"
EXTERIOR FACE OF WALLS	2"
ALL OTHER WALL FACES	3/4"
BEAMS	1 1/2" (2" FOR EXTERIOR)
SLABS (INCLUDING SLAB SUPPORTING EARTH)	1"
COLUMNS	1 1/2" (2" FOR EXTERIOR)

5. #5 AND LARGER REINFORCING BARS SHALL NOT BE SPLICED EXCEPT AS LOCATED AND DETAILED ON THE DRAWINGS. #4 AND SMALLER BARS WITH LENGTHS NOT SHOWN SHALL BE CONTINUOUS. PROVIDE CLASS 'B' SPLICE UNLESS NOTED OTHERWISE. ALL BARS IN MASONRY SHALL BE CONTINUOUS, LAPPING 48 BAR DIAMETERS, 2'–0" MINIMUM. HORIZONTAL WALL SPLICES SHALL BE STAGGERED. VERTICAL BARS SHALL NOT BE SPLICED EXCEPT AT HORIZONTAL SUPPORTS, SUCH AS FLOOR OR ROOF, UNLESS DETAILED OTHERWISE. ALL BARS ENDING AT THE FACE OF A WALL, COLUMN, OR BEAM SHALL EXTEND TO WITHIN 2" OF THE FAR FACE AND HAVE A 90 DEGREE HOOK, UNLESS OTHERWISE SHOWN.

6. BARS SHALL BE FIRMLY SUPPORTED AND ACCURATELY PLACED AS REQUIRED BY THE ACI STANDARDS, USING TIE AND SUPPORT BARS IN ADDITION TO REINFORCEMENT SHOWN WHERE NECESSARY FOR FIRM AND ACCURATE PLACING. PROVIDE DOWELS TO MATCH ALL REINFORCEMENT AT POUR JOINTS, UNLESS SHOWN OR NOTED OTHERWISE. ALL DOWELS AND BOLTS SHALL BE ACCURATELY SET IN PLACE BEFORE PLACING CONCRETE. NO WELDING OF REINFORCEMENT (INCLUDING TACK WELDING) SHALL BE DONE UNLESS SHOWN ON THE DRAWINGS OR APPROVED BY THE ENGINEER.

7. IN WALL REINFORCING, CURTAINS CONTAINING VERTICAL AND HORIZONTAL BARS OF THE SAME SIZE, VERTICAL BARS SHALL BE PLACED CLOSEST TO THE WALL SURFACE. IN CURTAINS WHICH VERTICAL AND HORIZONTAL BARS ARE OF DIFFERENT SIZES OR SPACING, THE LAYER WITH THE MOST STEEL SHALL BE PLACED CLOSEST TO THE NEAR SURFACE.

8. ALL BARS INTERRUPTED BY STRUCTURAL STEEL SHALL EXTEND TO WITHIN 1" OF STRUCTURAL STEEL FLANGE OR WEB AND HAVE A 90 DEGREE HOOK OR LENTON TERMINATOR OR EQUAL UNLESS OTHERWISE SHOWN.

9. DRAWINGS SHOW TYPICAL REINFORCING CONDITIONS. CONTRACTOR SHALL PREPARE DETAILED PLACEMENT DRAWINGS OF ALL CONDITIONS SHOWING QUANTITY, SPACING, SIZES, CLEARANCES, LAPS, INTERSECTIONS, AND COVERAGE REQUIRED BY THE STRUCTURAL DETAILS, APPLICABLE CODE, AND TRADE STANDARDS. CONTRACTOR SHALL NOTIFY REINFORCING INSPECTOR OF ANY ADJUSTMENTS FROM TYPICAL CONDITIONS WHICH ARE PROPOSED IN PLACEMENT DRAWINGS TO FACILITATE FIELD PLACEMENT OF REINFORCING STEEL AND CONCRETE.

10. REBAR BENDS SHALL BE MADE COLD. REBARS SHALL NOT BE BENT AFTER ANY PORTION OF THE BAR IS ENCASED IN CONCRETE.

11. ALL LAP SPLICES ARE CLASS 'B' LAP SPLICES UNLESS NOTED OTHERWISE.

12. ALL REBAR MECHANICAL COUPLERS ARE TO DEVELOP 160% OF THE SPECIFIED YIELD STRENGTH OF THE REBARS (TYPE 2 SPLICE PER 1997 UBC). MECHANICAL COUPLERS ARE TO BE INSTALLED PER MANUFACTURERS INSTRUCTION AND ICC REQUIREMENTS AND SHALL BE ACCEPTED BY THE INSPECTOR OR RECORD/SPECIAL INSPECTOR QUALIFIED TO PERFORM INSPECTION OF MECHANICAL COUPLERS. COUPLER LOCATIONS SHOWN ON THE DRAWINGS ARE SUGGESTED LOCATIONS. AND MAY BE ELIMINATED IF LONGER BAR LENGTH ARE PRACTICAL. ADDITIONAL COUPLERS MAY BE REQUIRED FOR DRAG BEAM REINFORCING PASSING THROUGH EXISTING STEEL BEAMS. SEE DETAILS ON S4.03. STAGGER COUPLERS PER 9/S1.01.

GENERAL

1. ALL NEW CONSTRUCTION SHALL COMPLY WITH THE CONTRACT DOCUMENTS AND THE CURRENT EDITION OF THE LOS ANGELES COUNTY BUILDING CODE, (LACBC).

TYPICAL DETAILS AND GENERAL NOTES APPLY TO ALL PARTS OF THE WORK EXCEPT WHERE SPECIFICALLY DETAILED OR UNLESS NOTED OTHERWISE (U.N.O.)

2. THE STRUCTURAL DRAWINGS ILLUSTRATE THE NEW STRUCTURAL MEMBERS. REFER TO ARCHITECTURAL, MECHANICAL AND ELECTRICAL DRAWINGS FOR NON–STRUCTURAL ITEMS WHICH REQUIRE SPECIAL PROVISIONS DURING THE CONSTRUCTION OF THE STRUCTURAL MEMBERS.

3. REFER TO ARCHITECTURAL PLANS FOR FLOOR DEPRESSIONS, OPENINGS, SLOPES, DRAINS, CURBS, PADS, EMBEDDED ITEMS, NON–BEARING PARTITIONS, ETC. REFER TO MECHANICAL AND ELECTRICAL PLANS FOR SLEEVES, OPENINGS, AND HANGERS FOR PIPES, DUCTS AND EQUIPMENT.

4. THE CONTRACTOR SHALL VERIFY AND BE RESPONSIBLE FOR ALL DIMENSIONS AND CONDITIONS WHICH IMPACT THE WORK. FIELD VERIFY SIZES, ELEVATIONS, HOLE LOCATIONS, ETC. PRIOR TO FABRICATION.

5. DRAWING DIMENSIONS ARE TO FACE OF FINISH, JOINT CENTERLINE OR COLUMN GRID CENTERLINE UNLESS NOTED OTHERWISE. DO NOT SCALE THE DRAWINGS.

6. CONTRACTOR SHALL CAREFULLY REVIEW THE DRAWINGS TO IDENTIFY THE SCOPE OF WORK REQUIRED. VISIT THE SITE TO RELATE THE SCOPE OF WORK TO EXISTING CONDITIONS AND DETERMINE THE EXTENT TO WHICH THOSE CONDITIONS AND PHYSICAL SURROUNDINGS WILL IMPACT THE WORK.

7. EXISTING CONDITIONS AS SHOWN ON THESE PLANS ARE FOR REFERENCE ONLY. CONTRACTOR IS REQUIRED TO FIELD VERIFY ALL EXISTING CONDITIONS PRIOR TO CONSTRUCTION.

8. THE CONTRACTOR SHALL RESOLVE ANY CONFLICTS ON THE DRAWINGS OR IN THE SPECIFICATIONS WITH THE ARCHITECT/ENGINEER BEFORE PROCEEDING WITH THE WORK.

9. ANY DEVIATION, MODIFICATION & SUBSTITUTION FROM THE APPROVED SET OF STRUCTURAL DRAWINGS SHALL BE SUBMITTED TO THE OWNER, ARCHITECT, ENGINEER AND GOVERNING CODE AUTHORITY FOR REVIEW/APPROVAL PRIOR TO ITS USE OR INCLUSION ON THE SHOP DRAWINGS.

10. THE CONTRACTOR SHALL PROVIDE ALL NECESSARY SHORES, BRACES AND GUYS REQUIRED TO SUPPORT ALL LOADS TO WHICH THE BUILDING STRUCTURE AND COMPONENTS, SOILS, OTHER STRUCTURES AND UTILITIES MAY BE SUBJECTED DURING CONSTRUCTION SHORING SYSTEMS SHALL BE DESIGNED AND STAMPED BY A CIVIL ENGINEER LICENSED IN THE STATE OF CALIFORNIA.

11. THE CONTRACTOR SHALL PROVIDE MEANS, METHOD, TECHNIQUES, SEQUENCE AND PROCEDURE OF CONSTRUCTION AS REQUIRED.

12. KEY AND DOWEL POUR JOINTS AS SHOWN ON THE PLANS. ANY DEVIATION FROM POUR JOINTS SHOWN ON THE PLANS MUST BE APPROVED BY THE ENGINEER.

13. THE CONTRACTOR SHALL PROTECT ALL WORK, MATERIALS AND EQUIPMENT FROM DAMAGE AND SHALL PROVIDE PROPER STORAGE FACILITIES FOR MATERIALS AND EQUIPMENT DURING CONSTRUCTION.

14. SITE VISITS PERFORMED BY ARCHITECT/ENGINEER DO NOT INCLUDE INSPECTIONS OF MEANS AND METHODS OF CONSTRUCTION PERFORMED BY CONTRACTOR.

15. STRUCTURAL OBSERVATIONS PERFORMED BY ARCHITECT/ENGINEER DURING CONSTRUCTION ARE NOT THE CONTINUOUS AND SPECIAL INSPECTION SERVICES AND DO NOT WAIVE THE RESPONSIBILITY FOR THE INSPECTIONS REQUIRED OF THE BUILDING INSPECTOR OR THE DEPUTY INSPECTOR. OBSERVATIONS ALSO DO NOT GUARANTEE CONTRACTOR'S PERFORMANCE AND SHALL NOT BE CONSIDERED AS SUPERVISION OF CONSTRUCTION.

16. CONTRACTORS SHALL REVIEW SHOP DRAWINGS FOR COMPLETENESS AND COMPLIANCE WITH CONTRACT DOCUMENTS. CONTRACTOR SHALL STAMP SHOP DRAWINGS PRIOR TO SUBMISSION TO ARCHITECT AND ENGINEER.

17. ARCHITECT'S ENGINEERS REVIEW OF THE SHOP DRAWINGS SHALL NOT BE CONSTRUED AS AN AUTHORIZATION TO DEVIATE FROM CONTRACT DOCUMENTS.

18. SHOP DRAWINGS WILL NOT BE PROCESSED DUE TO INCOMPLETENESS, LACK OF COORDINATION WITH RELEVANT PORTION OF CONTRACT DOCUMENTS, LACK OF CALCULATIONS IF REQUIRED AND WHERE DEVIATIONS, MODIFICATIONS AND SUBSTITUTIONS ARE INDICATED WITHOUT PRIOR WRITTEN APPROVAL FROM ARCHITECT/ENGINEER.

19. ALLOW SEVEN WORKING DAYS FOR PROCESSING SHOP DRAWINGS AFTER RECEIPT BY THE ENGINEER.

CONCRETE

1. ALL STRUCTURAL CONCRETE SHALL HAVE A MINIMUM COMPRESSIVE STRENGTH AT 28 DAYS AS FOLLOWS:

DESCRIPTION:	STRENGTH:
SLAB ON GRADE	3000 PSI HARDROCK
FOUNDATIONS	4000 PSI HARDROCK
SHEARWALLS (BELOW TENTH FLOOR)	6000 PSI HARDROCK
SHEARWALLS (ABOVE TENTH FLOOR)	8000 PSI HARDROCK
FILL OVER METAL DECK	3000 PSI LIGHT WEIGHT

2. ALL CONCRETE IN CONTACT WITH EARTH SHALL UTILIZE TYPE V CEMENT WITH POZZOLAN.

3. ALL CONCRTE MIXES SHALL BE DESIGNED BY AN APPROVED LABORATORY

4. ADMIXTURES CONTAINING CALCIUM CHLORIDE ARE NOT ALLOWED AT CONCRETE FILL OVER METAL DECK.

5. ALL CEMENT SHALL BE LOW ALKALI WITH A MIXIMUM OF 0.60 PERCENT EQUIVALENT Na20.

6. CHLORIDE CONTENT OF THE CONCRETE SHALL NOT EXCEED 0.01.

7. CONCRETE AGGREGATES SHALL CONFORM TO ASTM C–33.

8. NO MORE THAN ONE GRADE OF CONCRETE SHALL BE ON THE JOB SITE AT ANY ONE TIME.

9. THOROUGHLY CLEAN AND ROUGHEN ALL EXISTING CONCRETE SURFACES TO RECEIVE NEW CONCRETE EXCEPT FOR THE FACES OF EXISTING WALLS AGAINST WHICH NEW WALLS ARE CAST INTERFACE SHALL BE ROUGHENED TO A FULL AMPLITUDE OF 1/4" UNLESS NOTED OTHERWISE.

10. NON–SHRINK CEMENT GROUT SHALL HAVE A MINIMUM 28 DAY COMPRESSIVE STRENGTH OF 5000 PSI. USE "FIVE STAR GROUT" (COLA RR # 23616) OR "MASTERFLOW 928" (COLA RR # 23137).

EXISTING STRUCTURAL PROPERTIES

1. THE FOLLOWING MATERIAL PROPOERTIES USED IN THE EVALUATION OF EXISTING ELEMENTS ARE BASED ON THE RESULTS OF TESTING PERFORMED BY TWINING LABORATORIES:
A. STEEL BEAMS, COLUMNS, TRUSSES: FY = 30,000 PSI
B. REINFORCING STEEL: FY = 42,000 PSI
C. CONCRETE: 3,200 PSI

2. ALL WELDING TO EXISTING STEEL SHALL BE IN STRICT CONFORMANCE WITH AWS D1.1–02 (SEE WELDING NOTES).

FOUNDATIONS

1. SEE REPORT BY : CONVERSE CONSULTANTS
PROJECT NO. 03–31–102–01, DATED MAY 5, 2003
AND SUBSEQUENT ADDENDUMS.

2. ALL CONSTRUCTION SHALL BE IN ACCORDANCE WITH THE SOILS REPORT.

3. THE SOILS REPORT AND ITS RECOMMENDATIONS SHALL BE FOLLOWED AND SHALL BE CONSIDERED MINIMUM REQUIREMENTS UNLESS MORE STRINGENT REQUIREMENTS ARE PRESENTED IN THE SPECIFICATIONS OR ON THE DRAWINGS

4. PER SOILS REPORT, THE ALLOWABLE SOIL BEARING PRESSURES ARE AS FOLLOWS:

COLUMN FOOTING	9,000 POUNDS PER SQUARE FOOT
WALL FOOTING	7,000 POUNDS PER SQUARE FOOT

ALLOWABLE BEARING VALUES MAY BE INCREASED BY 33 PERCENT FOR TRANSIENT LOADING.

5. LATERAL EARTH PRESSURE (PER SOILS REPORT)
A. COEFFICIENT OF FRICTION = 0.3
B. PASSIVE EARTH PRESSURE = 350 PCF (3500 PSF MAXIMUM)

ADHESIVE AND EXPANSION ANCHORS

1. EXPANSION ANCHORS SHALL BE HILTI CARBON STEEL KWIK–BOLT 3, LARR # 25577 (ICC ESR–1385), OR APPROVED EQUAL. WITH DIAMETER AND EMBEDMENT LENGTH AS NOTED ON THE DRAWINGS. INSTALL PER THE MANUFACTURER'S RECOMMENDATIONS.

2. ADHESIVE FOR REINF DOWELS SHALL BE HILTI "HY–150", LARR #25257 (ICC ER–5193), SIMPSON SET, LARR #25279 (ICC ESR–1772) OR APPROVED EQUAL WITH DIAMETER AND EMBEDMENT LENGTH AS NOTED ON THE DRAWINGS. INSTALL PER THE MANUFACTURER'S RECOMMENDATIONS.

3. EXISTING REINFORCING SHALL NOT BE DAMAGED WHILE DRILLING FOR NEW EXPANSION OR ADHESIVE DOWELS. THE CONTRACTOR IS RESPONSIBLE FOR LOCATING EXISTING REINFORCING PRIOR TO DRILLING. EXISTING REINFORCING SHALL BE LOCATED BY NON–DESTRUCTIVE METHODS UNLESS SPECIFICALLY APPROVED BY THE ARCHITECT/ENGINEER.

LIST OF STRUCTURAL DRAWINGS

S1.00 GENERAL NOTES AND SHEET LIST
S1.00A GENERAL NOTES
S1.01 TYPICAL DETAILS
S1.02 TYPICAL DETAILS
S1.03 TYPICAL DETAILS

DS2.00 DEMO BASEMENT FLOOR/FOUNDATION PLAN
DS2.01 DEMO FIRST FLOOR FRAMING PLAN
DS2.02 DEMO SECOND FLOOR FRAMING PLAN
DS2.03 DEMO THIRD FLOOR FRAMING PLAN
DS2.04 DEMO FOURTH FLOOR FRAMING PLAN
DS2.05 DEMO FIFTH FLOOR FRAMING PLAN
DS2.06 DEMO SIXTH FLOOR FRAMING PLAN
DS2.07 DEMO SEVENTH FLOOR FRAMING PLAN
DS2.08 DEMO EIGHTH FLOOR FRAMING PLAN
DS2.09 DEMO NINTH FLOOR FRAMING PLAN
DS2.10 DEMO TENTH FLOOR FRAMING PLAN
DS2.11 DEMO ELEVENTH FLOOR FRAMING PLAN
DS2.12 DEMO TWELFTH FLOOR FRAMING PLAN
DS2.13 DEMO THIRTEENTH FLOOR FRAMING PLAN
DS2.14 DEMO FOURTEENTH FLOOR FRAMING PLAN
DS2.15 DEMO PENTHOUSE FLOOR FRAMING PLAN
DS2.16 DEMO ROOF FRAMING PLAN

S2.00 BASEMENT FLOOR/FOUNDATION PLAN
S2.01 FIRST FLOOR FRAMING PLAN
S2.02 SECOND FLOOR FRAMING PLAN
S2.03 THIRD FLOOR FRAMING PLAN
S2.04 FOURTH FLOOR FRAMING PLAN
S2.05 FIFTH FLOOR FRAMING PLAN
S2.06 SIXTH FLOOR FRAMING PLAN
S2.07 SEVENTH FLOOR FRAMING PLAN
S2.08 EIGHTH FLOOR FRAMING PLAN
S2.09 NINTH FLOOR FRAMING PLAN
S2.10 TENTH FLOOR FRAMING PLAN
S2.11 ELEVENTH FLOOR FRAMING PLAN
S2.12 TWELFTH FLOOR FRAMING PLAN
S2.13 THIRTEENTH FLOOR FRAMING PLAN
S2.14 FOURTEENTH FLOOR FRAMING PLAN
S2.15 ROOF FRAMING PLAN
S2.16 ELEV. MACHINE ROOM PLAN
S2.17 ENLARGED STAIR FRAMING PLANS
S2.18 ENLARGED STAIR FRAMING PLANS

S3.01 INTERIOR EAST WALL ELEVATION
S3.02 INTERIOR WEST WALL ELEVATION
S3.03 INTERIOR SOUTH WALL ELEVATION
S3.04 INTERIOR NORTH WALL ELEVATION
S3.05 DRAG BEAM ELEVATIONS

S4.00 SECTIONS AND DETAILS
S4.01 SECTIONS AND DETAILS
S4.02 SECTIONS AND DETAILS
S4.03 SECTIONS AND DETAILS
S4.04 SECTIONS AND DETAILS
S4.11 SECTIONS AND DETAILS
S4.12 SECTIONS AND DETAILS
S4.13 SECTIONS AND DETAILS

STRUCTURAL OBSERVATION

1. PERIODIC STRUCTURAL OBSERVATION SHALL BE PROVIDED BY THE STRUCTURAL ENGINEER, PER LACBC SECTION 1702
(SEE MEMO BELOW). CONTRACTOR SHALL NOTIFY ENGINEER 48 HOURS BEFORE REQUIRED OBSERVATIONS. DELINQUENT NOTIFICATION MAY REQUIRE DEMOLITION OF COVERING MATERIAL TO FACILITATE OBSERVATION.

2. STRUCTURAL OBSERVATION IS THE VISUAL OBSERVATION OF THE ELEMENTS AND CONNECTIONS OF THE STRUCTURAL SYSTEM AT SIGNIFICANT CONSTRUCTION STAGES AND THE COMPLETED STRUCTURE FOR GENERAL CONFORMANCE TO THE APPROVED PLANS AND SPECIFICATIONS. STRUCTURAL OBSERVATION DOES NOT WAIVE THE RESPONSIBILITY FOR THE INSPECTIONS REQUIRED OF THE BUILDING INSPECTOR OR THE DEPUTY INSPECTOR.

3. THE STRUCTURAL OBSERVER SHALL PERFORM SITE VISITS AT THOSE STEPS IN THE PROGRESS OF THE WORK THAT ALLOW FOR CORRECTION OF DEFICIENCIES WITHOUT SUBSTANTIAL EFFORT OR UNCOVERING OF THE WORK INVOLVED. AT A MINIMUM, THE FOLLOWING SIGNIFICANT CONSTRUCTION STAGES REQUIRE A SITE VISIT AND AN OBSERVATION REPORT FROM THE STRUCTURAL OBSERVER:

CONSTRUCTION STAGES	ELEMENTS/CONSTRUCTIONS TO BE OBSERVED
A) FOUNDATIONS	FOOTINGS, ANCHOR BOLTS, RETAINING WALLS, PERIMETER SLAB ON GRADE
B) CONCRETE	SHEAR WALLS, CONCRETE FLOOR
C) STRUCTURAL STEEL	PENTHOUSE STEEL FRAMING AND CONNECTIONS, MISCELLANEOUS INFILL STEEL FRAMING

CODE

STRUCTURAL EVALUATION AND DESIGN HAS BEEN PERFORMED IN ACCORDANCE WITH CHAPTER 34, DIVISION II, OF THE 2002 LOS ANGELES COUNTY BUILDING CODE (LACBC) AND STATE HISTORICAL BUILDING CODE (SHBC).

VERTICAL LIVE LOADS (WITH CODE ALLOWABLE AREA REDUCTION UNLESS NOTED OTHERWISE):

ROOF	20 PSF
OFFICE	50 PSF
CORRIDOR	100 PSF
MECHANICAL	125 PSF (OR EQUIPMENT WEIGHTS WHERE PROVIDED)

LATERAL LOADS

WIND: AS PER THE 2002 LACBC.
BASIC WIND SPEED = 70 MPH
EXPOSURE TYPE : BUILDING – C

IMPORTANCE FACTOR, I = 1.0

SEISMIC: AS PER THE 2002 LACBC
Z = 0.4
Nv = 1.1 Cv = 0.63
Na = 1.0 Ca = 0.40
SOIL PROFILE TYPE: S_C
SEISMIC SOURCE TYPE: B
R = 5.5 (CONCRETE SHEAR WALLS)
Ω_{1e}= 2.8 (CONCRETE SHEAR WALLS)

NADEL Architects Inc.
1990 So. Bundy Dr.
Fourth Floor
Los Angeles, CA 90025
T. 310.826.2100
F

CLADDING PINNING NOTES

1. ALL GRANITE AND TERRA COTTA CLADDING SHALL BE PINNED TO EXISTING CONCRETE WALL BACKING USING BLOK-LOK TIES. EMBEDMENT INTO CONCRETE SHALL BE A MINIMUM OF 3".

2. EACH PIECE OF TERRA COTTA CLADDING SHALL BE PROVIDED WITH 10 MM BLOK-LOK ANCHORS OR APPROVED EQUAL WITH A MINIMUM 1 1/2" EMBEDMENT w/ 8 mm (5/16") PREDRILL INTO TERRA COTTA PER THE FOLLOWING TABLE:

TERRA COTTA CLADDING ANCHORAGE		
	9TH FLOOR TO ROOF	1ST FOOR TO 8TH FLOOR
	MAX WGT (LBS.)	MAX WGT (LBS.)
2 ANCHORS	240	340
3 ANCHORS	370	510
4 ANCHORS	490	680
6 ANCHORS	730	1020
8 ANCHORS	980	1360
10 ANCHORS	1230	1710

CALCULATE REQUIRED NUMBER OF ANCHORS BASED ON THE WEIGHT OF THE PIECE (VOLUME TIMES 145 LBS/CU. FT. FOR GROUTED TERRA COTTA).

3. EACH PIECE OF GRANITE CLADDING SHALL BE PROVIDED WITH 10 MM BLOK-LOK ANCHORS OR APPROVED EQUAL WITH A MINIMUM 1" EMBEDMENT w/ 8 mm (5/16") PREDRILL INTO GRANITE PER THE FOLLOWING TABLE:

GRANITE CLADDING ANCHORAGE				
	9TH FLOOR TO ROOF		1ST FOOR TO 8TH FLOOR	
	MAX WGT (LBS.)	MAX AREA (SQ. FT.)	MAX WGT (LBS.)	MAX AREA (SQ. FT.)
2 ANCHORS	620	5.9	1140	8.2
3 ANCHORS	1230	8.9	1710	12.4
4 ANCHORS	1640	11.9	2280	16.5
6 ANCHORS	2460	17.8	3420	24.7
8 ANCHORS	3280	23.7	4570	33.0
10 ANCHORS	4100	29.7	5700	41.2

MAXIMUM AREA IS BASED ON A THICKNESS OF 9 1/2. FOR PIECES OF DIFFERENT OR VARYING THICKNESS, CALCULATE REQUIRED NUMBER OF ANCHORS BASED ON THE WEIGHT OF THE PIECE (VOLUME TIMES 175 LBS/CU.FT.)

4. UNREINFORCED SOLID CLAY BRICK MASONRY (URM) SHALL BE PROVIDED WITH BLOK-LOK ANCHORS OF THE SIZE, EMBEDMENT, AND HORIZONTAL AND VERTICAL SPACING PROVIDED IN CORRESPONDING DETAILS PER SHEET S4.11. ANCHORS SHALL BE LOCATED INTO BRICK FACE, NOT MORTAR JOINT.

5. GRANITE ANCHORS SHALL BE LOCATED SUCH THAT THE ANCHOR GROUP IS CENTERED ON THE GEOMETRIC CENTER OF THE CLADDING PIECE.

6. FOR GRANITE AND TERRACOTTA ANCHORAGE, SPACE ANCHORS TO PROMOTE STABILITY. USE AN EDGE DISTANCE NO LESS THAN 1 1/2 TIMES THE EMBEDMENT DEPTH. REFER TO MAUFACTURERS SPECIFICATIONS FOR ADDITIONAL INSTALLATION INFORMATION.

7. THE ANCHOR QUANTITIES NOTED ABOVE ARE BASED ON AN AVERAGE ULTIMATE LOAD OF 1250 LBS FOR GRANITE, 375 LBS (BASED ON ONE TEST) AND 950 LBS FOR BRICK (FROM SITE TEST DATA), DIVIDED BY A SAFETY FACTOR OF FOUR.

ANCHOR TESTING

MATERIAL ANCHORAGE TESTING		
SUBSIRATE MATERIAL	ANCHOR DIAM.	BLOK-LOK WALL TIE (lbs.)
GRANITE	10mm	625
TERA COTTA	10mm	200
U.R.M.	10mm	475

ADHESIVE ANCHOR TESTING			
ROD DIA. OR BAR SIZE	EMBEDMENT	TENSION LOAD	BASE MATERIAL
#4	2"	1,500#	CONCRETE
#4	4"	3,950#	CONCRETE
#4	8"	4,810#	CONCRETE
#5	10"	9,770#	CONCRETE
#6	7"	9,120#	CONCRETE
#5	46"	11,000#	CONCRETE
#6	50"	15,800#	CONCRETE
#7	48"	21,600#	CONCRETE
#8	55"	28,400#	CONCRETE
#9	62"	36,000#	CONCRETE
#10	70"	45,700#	CONCRETE
5/16"	3 3/8"	350#	H.C.T. (SEE NOTE 8)

1. TEN PERCENT OF EACH TYPE OF ANCHOR MUST BE TESTED.
2. ANCHORS SHALL BE TESTED TO VALUE IN THE TABLE ABOVE, EQUAL TO 1/2 OF FAILURE LOAD.
3. REACTION LOADS FROM TEST FIXTURES MAY BE APPLIED CLOSE TO THE ANCHOR BEING TESTED, PROVIDED THE ANCHOR IS NOT RESTRAINED FROM WITHDRAWING BY THE FIXTURE(S).
4. TEST EQUIPMENT IS TO BE CALIBRATED BY AN APPROVED TESTING LABORATORY IN ACCORDANCE WITH STANDARD RECOGNIZED PROCEDURES.
5. THE ANCHOR SHOULD HAVE NO OBSERVABLE MOVEMENT AT THE APPLICABLE TEST LOAD.
6. IF ANY ANCHOR FAILS TESTING, ALL ANCHORS OF THE SAME CATEGORY, NOT PREVIOUSLY TESTED, SHALL BE TESTED UNTIL 20 CONSECUTIVE ANCHORS PASS THE TEST REQUIREMENTS. THE INITIAL TESTING FREQUENCY SHALL THEN BE RESUMED. REMOVE FAILED ANCHOR & FILL HOLE WITH NON-SHRINK GROUT. INSTALL NEW ANCHOR 2" AWAY FROM FAILED ANCHOR.
7. TESTING SHOULD OCCUR 24 HOURS MINIMUM AFTER INSTALLATION OF THE SUBJECT ANCHORS.
8. TEST HILTI HIT HY20 ANCHORS PER DETAIL 11/S4.11.

FIBROUS REINFORCING SYSTEM (FIBER WRAP)

1. SEE SPECIFICATION SECTION 03240 FOR SUBMITTAL REQUIREMENTS, EXACT APPLICATION PROCEDURES, AND PROCEDURES TO SUBMIT ALTERNATE SYSTEMS.
2. PREPARE ALL WALL SURFACES BY ABRASIVE BLASTING OR GRINDING TO ACHIEVE A 1/16" MINIMUM AMPLITUDE.
3. APPLY ONE PRIME COAT OF THICKENED EPOXY.
4. APPLY THE TYFO ® SEH-51A SYSTEM AS PER MANUFACTURER'S SPECIFICATIONS.
5. FINISH AS PER PROJECT SEPCIFICATIONS. ALL SEAMS AND EDGES SHALL BE FEATHERED WITH THICKENED EXOPY.. IN ALL INTERIOR LOCATIONS APPLY A CLASS 1 (FLAME AND SMOKE PROTECTION) FIRE RESISTANT FINISH AND PAINT TO MATCH EXISTING.

EXISTING BUILDING DRAWINGS

THE FOLLOWING EXISTING BUILDING DRAWINGS SHALL BE MADE AVAILABLE TO THE CONTRACTOR:

1. "NEW HALL OF JUSTICE" DRAWINGS DATED JULY / AUGUST 1923: SHEETS 1-25, 51-97, 101-118, 200-265, AND 700-708.
2. "EXIT AND SAFETY ALTERATIONS - HALL OF JUSTICE" DRAWINGS SHEETS 1-57.

SHOTCRETE (CONT.)

13. THE CONTRACTOR SHALL BE FULLY FAMILIAR WITH SECTION 1924 OF 2002 LACBC, VOL. 2. ALL REQUIREMENTS OF SECTION 1924 OF 2002 LACBC, SHALL BE COMPLIED WITH.

L.A. CITY R.G.A. #1-85

CITY OF LOS ANGELES-DEPARTMENT OF BUILDING AND SAFETY
RULE OF GENERAL APPLICATION # 1-85
RGA# 1-85

SUBJECT: WET MIX SHOTCRETE

1. SCOPE. THE USE OF STRUCTURAL WET MIX SHOTCRETE IS HEREBY ALLOWED WHERE THE OWNER, ENGINEER CONTRACTOR AND CONCRETE SUPPLIER COMPLY WITH THESE PROCEDURES.
2. DEFINITIONS:
   SHOTCRETE IS MORTAR OR CONCRETE PNEUMATICALLY PROJECTED AT A HIGH VELOCITY ONTO A SURFACE.
   WET MIX SHOTCRETE IS SHOTCRETE IN WHICH ALL OF THE INGREDIENTS INCLUDING WATER ARE MIXED BEFORE INTRODUCTION INTO THE PLACING EQUIPMENT.
3. LIMITATION ON USE.
   A. GENERAL. STRUCTURAL WET MIX SHOTCRETE SHALL NOT BE PLACED WHERE THE STREAM FROM THE NOZZLE CANNOT DIRECTLY IMPINGE ON THE SURFACE ON WHICH THE CONCRETE IS TO BE PLACED. WHERE THE CONDITION PRECLUDES THE POSSIBILITY OF OBTAINING CORES FROM THE STRUCTURE, THIS METHOD SHALL NOT BE USED. REINFORCING SHALL BE SMALL BAR SIZES WITH #5 BARS BEING THE NORMAL MAXIMUM SIZE. WHERE STRUCTURAL DESIGN REQUIRES LARGER BARS THERE SHALL BE A MINIMUM SPACING OF SIX BAR DIAMETERS BETWEEN ALL REINFORCING BARS AND SPLICES SHALL BE PLACED SO THAT A LINE THROUGH THE CENTER OF THE TWO SPLICES BARS IS PERPENDICULAR TO THE SURFACE OF THE WET MIX SHOTCRETE WORK. BAR SIZES SHALL NOT EXCEED #8 BARS. WHERE THE SIZE OF REINFORCING EXCEEDS #5 BARS ONLY A QUALIFIED PERSON ON THE NOZZLE WITH A MINIMUM OF THREE YEARS STRUCTURAL WET MIX SHOTCRETE EXPERIENCE AND POSSESSING WRITTEN DOCUMENTATION OF THAT EXPERIENCE SHALL APPLY WET MIX SHOTCRETE.
   B. COLUMNS. STRUCTURAL WET MIX SHOTCRETE SHALL NOT BE APPLIED TO SPIRAL COLUMNS. SHOTCRETE MAY ONLY BE APPLIED TO TIED COLUMNS WHERE THE SPACING OF THE REINFORCING STEEL IS THE SAME AS FOR WALLS.
   C. WALLS. WHERE STRUCTURAL WET MIX SHOTCRETE IS TO BE APPLIED TO WALLS, THE MINIMUM SPACING OF THE REINFORCING STEEL SHALL BE SIX BAR DIAMETERS FOR WALLS WITH ONE CURTAIN OF STEEL. WHERE TWO CURTAINS OF STEEL ARE PROVIDED, THE CURTAIN NEAREST THE NOZZLE SHALL HAVE A MINIMUM SPACING OF 12 BAR DIAMETERS AND THE REMAINING CURTAIN SHALL HAVE A MINIMUM SPACING OF SIX BAR DIAMETERS, REINFORCING STEEL SHALL HAVE A MINIMUM SPACING OF THREE BAR DIAMETERS AT SPLICES. IN ALL CASES, THE MINIMUM CLEAR DISTANCE BETWEEN REINFORCING BARS (OTHER THAN MESH) SHALL BE 2 1/2 INCHES.
   EXCEPTION: CONTACT SPLICES SHALL NOT BE MADE IN BARS LARGER THAN #5.
   D. CODE SECTION 91.0310(A)2 REQUIRES CONTINUOUS INSPECTION BY A REGISTERED DEPUTY BUILDING INSPECTOR(S) FOR ALL PNEUMATIC" MORTAR..
4. CODES: ALL OTHER REQUIREMENTS FOR INSPECTION AND CONCRETE OF THE BUILDING CODE AND APPLICABLE PARTS OF ACI 506-66 SHALL BE FOLLOWED. APPLICATORS OF STRUCTURAL WET MIX SHOTCRETE SHALL HAVE A COPY OF ACI 506-66 ON EACH WORK SITE AT THE TIME OF SHOTCRETING. THE WORD "SHALL" SHALL BE SUBSTITUTED WHENEVER THE WORD "SHOULD" OCCURS IN ACI 506-66. THE CONCRETE MIX SHALL COMPLY WITH METHOD II OF CODE SECTION 91.2604(D)2, AND SHALL NOT BE BATCHED VOLUMETRICALLY. A TEST CONSISTING OF AT LEAST TWO CYLINDERS AT 28 DAYS SHALL ALSO BE REQUIRED. ALL OTHER APPLICABLE REQUIREMENTS OF THE CODE (INCLUDING ALL REQUIREMENTS FOR PNEUMATICALLY PLACED WET MIXED MORTAR) SHALL APPLY, INCLUDING MAXIMUM TIME-IN MIXER.
5. TESTING:
   A. THE WET MIX SHOTCRETE SUPERVISOR AND THE PERSON AT THE NOZZLE SHALL PROVIDE A RESUME APPROVED BY THE DEPARTMENT PRIOR TO PLACING. THE SUBCONTRACTOR WHO WILL PLACE THE SHOTCRETE SHALL SUPPLY A WRITTEN RESUME OF HIS EXPERIENCE IN THE PLACING OF STRUCTURAL SHOTCRETE (OTHER THAN SWIMMING POOLS) AND LOCATIONS OF PREVIOUS JOBS APPROVED BY THE DEPARTMENT. WHEN THE DEPARTMENT APPROVES THE RESUMES OF THE PERSON AT THE NOZZLE; THE WET MIX SHOTCRETE SUPERVISOR, AND THE SUBCONTRACTOR, THAT APPROVAL OF THE DEPARTMENT SHALL BE EFFECTIVE FOR ONE YEAR, BUT IF ANY MEMBER OF THE THREE PERSONS NO LONGER OCCUPIES THE POSITION ON THE TEAM, A NEW RESUME SHALL BE SUBMITTED.
   B. EACH TEAM OF THE PERSON AT THE NOZZLE AND THE HELPER SHALL SHOOT A TEST PANEL OF THE THICKNESS AND WITH TYPICAL REINFORCING STEEL PATTERN USING EACH SHOOTING POSITION BEFORE COMMENCING ANY WET MIX SHOTCRETING WORK ON THE BUILDING. THE DEPUTY BUILDING INSPECTOR SHALL WITNESSES THE ASSEMBLY, REINFORCING, SHOOTING AND DISASSEMBLY OF THE TEST. THE PANEL SHALL BE AT LEAST 4'X 4'. AFTER SHOOTING, BUT BEFORE THE CONCRETE HAS FULLY SET, THE PANEL SHALL BE DISASSEMBLED TO ASSURE THAT THE TEAM AND EQUIPMENT TO BE USED IS CAPABLE OF PROVIDING SOUND CONCRETE BEHIND REINFORCING STEEL. THE PANEL SHALL BE FREE OF VOIDS, SAGS, ETC. APPLICATION OF STRUCTURAL WET MIX SHOTCRETE IN THE FINISHED WORK SHALL NOT PROCEED UNTIL THE TEST PANEL HAS BEEN SHOT, DISASSEMBLED, INSPECTED AND APPROVED BY THE DEPARTMENT.
   EXCEPTION: WHEN THE PERSON AT THE NOZZLE AND HIS OR HER HE HELPER TEAM HAS PREVIOUSLY SUCCESSFULLY SHOT A TEST PANEL UNDER THE JURISDICTION OF THE DEPARTMENT, THE BUILDING INSPECTOR MAY ALLOW APPLICATION OF WET MIX SHOTCRETE TO PROCEED ON THE STRUCTURE PRIOR TO DISASSEMBLING THE TEST PANEL. IF ANY DEFECTS ARE FOUND IN THE TEST PANEL, WHICH WOULD INDICATE THE POSSIBILITY OF STRUCTURAL FAILURE, WORK SHALL BE STOPPED IMMEDIATELY AND ALL STRUCTURAL WET MIX SHOTCRETE PLACED WHILE AWAITING THE DISASSEMBLY OF THE PANEL SHALL BE REMOVED.
   C. TESTING SHALL CONSIST OF 4" OR LARGER DIAMETER CORES CUT FROM THE FULL DEPTH OF THE WALL, WITH A MINIMUM OF ONE CORE FOR EACH 1,000 SQ.FT. OF WALL AND A MINIMUM OF TWO CORES FOR EACH DAY'S APPLICATION BY ANY ONE NOZZLE TEAM. CORES MUST BE FREE OF VOIDS AND REBOUND. CORE LOCATIONS SHALL BE SELECTED BY THE BUILDING DEPARTMENT WITH APPROVAL BY THE ENGINEER OF RECORD. ALL CORES SHALL BE CUT WITHIN TWO TO FIVE CALENDAR DAYS OF PLACEMENT OF THE CONCRETE, SHALL BE VISUALLY INSPECTED ON THE JOB SITE BY THE DEPUTY INSPECTOR, AND REPLACED INTO THE HOLES FROM WHICH THEY WERE CUT. THE SURFACE AT THE CORES SHALL BE SEALED TO PREVENT HYDRATION AND SHALL MARKED TO AID IN IDENTIFICATION OF THE CORE FOR
   TESTING AT 28-DAY AGE. THE CORES SHALL BE TESTED IN ACCORDANCE WITH ASTM C 42. THE CORES SHALL BE TESTED IN THE CONDITION THEY WERE IN WHEN REMOVED FROM THE WALL WITH NO FURTHER CURING ALLOWED. VERIFICATION OF THE FIELD INSPECTION SHALL BE REPORTED TO THE DEPARTMENT IMMEDIATELY BY THE DEPUTY INSPECTOR.
6. CONDITIONS: THE FOLLOWING CONDITIONS SHALL BE MADE PART OF THE PLANS AND BE APPROVED WITH THE SIGNATURE OF THE DESIGN ENGINEER.
   A. DETAILS OF COLD JOINTS, INCLUDING SLOPE OF JOINTS, SHALL BE PLACED ON THE APPROVED PLANS. WHEN SHOOTING UP TO UNDERSIDE OF EXISTING CONCRETE, THE LAST 2" SHALL BE DRY PACKED OR AN APPROVED METHOD OF DRY PNEUMATIC CONCRETE USED. EXCEPTION: PROVIDED THE DETAIL OF THE JOINT IS SLOPED SO THAT THE CLOSURE OF THE COLD JOINT MADE WITH STRUCTURAL WET MIX SHOTCRETE DOES NOT SAG AWAY FROM THE UPPER SURFACE AND PROVIDED BOTH SIDES OF THE COLD JOINT HAVE TAKEN THEIR INITIAL SET, THE JOINT CLOSURE MAY BE MADE WITH STRUCTURAL WET MIX SHOTCRETE.
   B. REINFORCING STEEL WILL BE SECURELY TIED IN PLACE IN A MANNER THAT PREVENTS ANY MOVEMENT DURING THE WET MIX SHOTCRETING.
   C. THE HEIGHT OF A LAYER SHALL BE LIMITED TO NOT MORE THAN 3' AND A SUCCEEDING LAYER SHALL NOT BE PLACED IN LESS THAN THREE HOURS. NO SLOUGHING OR SAGGING SHALL BE PERMITTED.
   EXCEPTION:
   1. A LICENSED CIVIL ENGINEER OR ARCHITECT MAY AUTHORIZE A SUCCEEDING LAYER TO BE PLACED IN LESS THAN THREE HOURS. NO SLOUGHING OR SAGGING 'SHALL BE PERMITTED.
   2. A CONCRETE MIX DESIGN UNDER METHOD II OF SECTION 91.2604(D) BY A LICENSED CIVIL ENGINEER MAY BE RECOMMENDED BY THAT CIVIL ENGINEER FOR LESS THAN THREE HOURS BETWEEN LIFTS, BUT NOT LESS THAN TWO HOURS BETWEEN LIFTS, BASED ON THE MIX DESIGN, CLIMATE CONDITIONS AND JOB CONDITIONS. THE RECOMMENDED LESSER TIME MAY BE USED ON THE JOB WHEN APPROVED BY THE PLAN CHECK DIVISION.
   D. THE MINIMUM SLUMP SHALL BE 1 1/2" AND THE MAXIMUM SLUMP SHALL BE 2 1/2". SLUMP SHALL BE MEASURED AT THE POINT OF DISCHARGE FROM THE MIXER, EXCEPT THE BUILDING INSPECTOR MAY REQUIRE SLUMP TESTS AT THE DISCHARGE POINT WHERE WATER MAY HAVE BEEN ADDED.
   E. A CAPABLE NOZZLEMAN'S HELPER WITH AN AIR BLOW PIPE SHALL BE PROVIDED TO ASSIST THE NOZZLEMAN IN KEEPING ALL REBOUND BUILD-UP OUT OF THE WORK.
   F. ADDITIONAL WORKERS MAY BE REQUIRED TO TAKE THE REBOUND FROM THE WORK IF THE REBOUND CANNOT BE REMOVED BY THE AIR BLOW PIPE.
   G. NO KEYWAYS OR EMBEDMENTS SHALL BE PLACED IN FRONT FACE THAT WILL INTERFERE WITH THE STREAM FROM THE NOZZLE.
   H. THE CONTRACTOR AGREES TO PROVIDE A DESIGNATED LIAISON BETWEEN HIS CREW, THE DEPUTY INSPECTOR AND THE BUILDING INSPECTOR.
   I. THE DEPUTY INSPECTOR SHALL BE INTERVIEWED AND APPROVED BY DEPARTMENT REPRESENTATIVES PRIOR TO INSPECTING THE WORK AT THE JOB SITE AND ONE DEPUTY SHALL BE ASSIGNED TO EACH NOZZLE.
   J. RIGID OR OTHER APPROVED BACKING SHALL BE PLACED AGAINST THE EARTH WHERE THERE IS ANY LIKELIHOOD OF SOIL BEING DISLODGED IN SUFFICIENT QUANTITY TO DAMAGE THE CONCRETE DURING THE APPLICATION OF WET MIX SHOTCRETE. RIGID OR OTHER APPROVED BACKING SHALL BE USED WHERE A VOID IN THE EMBANKMENT IS TO BE BRIDGED.
   K. IN THE EVENT THAT A PREVIOUSLY PRESUMED SOLID EMBANKMENT SHOULD SLOUGH OR SHED DIRT IN SUFFICIENT QUANTITY TO DAMAGE THE CONCRETE, THE WET MIX SHOTCRETE PLACEMENT WORK IN THAT AREA SHALL CEASE UNTIL A RIGID BACKING IS INSTALLED AND ANY CONTAINED SHOTCRETE IS REMOVED.

STRUCTURAL ALLOWANCES (CONT.)

2. STRUCTURAL STEEL:
   A. ADDITIONAL MECHANICAL SUPPORT, SCREEN WALL SUPPORT AND STRENGTHENING AT ROOF TOP- 5 TONS

   ALLOW FOR ALL STRUCTURAL STEEL WORK COMPLETE AND IN PLACE WITH APPROPRIATE ALLOWANCES FOR H.S. BOLTED CONNECTIONS AND SHEAR TABS, FIELD WELDING, FIELD FIT UP/ERECTION TOLERANCES DUE TO FIELD CONDITIONS, REMOVAL AND REPLACEMENT OF EXISTING CONCRETE ENCASEMENTS, FIREPROOFING, ETC. ALL NEW STRUCTURAL STEEL SHALL BE DIRECTLY SUPPORTED SHEAR TABS WELDED TO EXISTING STRUCTURAL STEEL.

ADDITIONAL ALLOWANCES:

ALLOW FOR FIELD INVESTIGATION/VERIFICATION OF AS-BUILT CONDITIONS INCLUDING REMOVAL AND REPLACEMENT OF ARCHITECTURAL FINISHES, COVERINGS, ENCASEMENTS, ETC. PRIOR TO COMMENCING CONSTRUCTION OPERATIONS.

ALLOW FOR ERECTION, FORMWORK, SHORING/SCAFFOLDING, ETC. FOR ALL WORK TO BE COMPLETED AND PUT IN PLACE.

ALLOW FOR CONTROLLED, LIMITED DEMOLITION OF EXISTING PORTIONS OF STRUCTURE AND FINISHES, INCLUDING THE MEANS OF REMOVAL, STORAGE AND/OR DISPOSAL.

ALLOW FOR MECHANICAL PADS, CURBS, BASES, ETC. AT ALL MECHANICAL EQUIPMENT LOCATIONS.

ALLOW FOR HOT DIP GALVANIZING AFTER FABRICATION OF ALL STRUCTURAL AND MISCELLANEOUS STEEL EXPOSED TO WEATHER.

WELDING

1. ALL WELDING SHALL BE IN STRICT CONFORMANCE WITH AWS D1.1-02.
2. "A WELDING PROCEDURE" SPECIFICATION (WPS) PER AWS D1.1 SHALL BE DEVELOPED BY THE FABRICATOR/ERECTOR AND REVIEWED BY THE ENGINEER. ALL WELDS SHALL BE PRE-QUALIFIED PER AWS D1.1-96. THE WPS SHALL INCLUDE THE WELDING PARAMETERS RECOMMENDED BY THE ELECTRODE MANUFACTURER. THE WPS SHALL INCLUDE ALL THE NECESSARY INFORMATION REQUIRED BY THE CODE, THIS SPECIFICATION AND ANY OTHER INFORMATION REQUIRED TO PRODUCE WELDS THAT ARE IN COMPLIANCE WITH THESE REQUIREMENTS.
3. A PRE-CONSTRUCTION MEETING BETWEEN THE ENGINEER OF RECORD,THE FABRICATOR, THE ERECTOR, THE CONTRACTOR AND THE INSPECTORS SHALL TAKE PLACE TO DISCUSS THE WELDING PROCEDURE SPECIFICATION(WPS). THE WELDING ELECTRODE MANUFACTURERS' SPECIFICATIONS SHOULD BE ATTACHED TO THE WPS ON ALL JOBS. ALL WELDERS AND INSPECTORS SHALL BE INFORMED OF AND MUST ADHERE TO THE WPS AND SHALL RETAIN A COPY.
4. COMPLETE JOINT PENETRATION GROOVE WELDS SHOULD HAVE A FILLER METAL WITH A NOTCH TOUGHNESS OF 20 FT/LBS AVERAGE AT MINUS TWENTY DEGREES FAHRENHEIT.
5. WELDING OF STRUCTURAL STEEL SHALL BE BY MANUAL SHIELD METAL ARC OR SUBMERGED ARC PROCESS USING E70XX ELECTRODES IN CONFORMANCE WITH LACBC
6. LENGTHS OF WELDS ARE EFFECTIVE LENGTHS AS SPECIFIED IN THE UNIFORM BUILDING CODE. WHERE LENGTH OF WELD IS NOT SHOWN IT SHALL BE FULL LENGTH OF JOINT. ALL BUTT WELDS SHALL BE FULL PENETRATION UNLESS NOTES OTHERWISE.
7. ALL SHOP WELDS SHALL BE PERFORMED BY A FABRICATOR LICENSED BY THE LOS ANGELES CITY BUILDING DEPARTMENT.
8. WELDERS SHALL BE QUALIFIED FOR THE WORK THEY WILL BE DOING AND SHALL HAVE CERTIFICATIONS CURRENT.
9. FACES OF FILLET WELDS EXPOSED TO VIEW SHALL HAVE AS-WELDED SURFACES THAT ARE REASONABLY SMOOTH AND UNIFORM. NO FINISHING OR GRINDING SHALL BE REQUIRED, EXCEPT WHERE CLEARANCES OR FIT OF OTHER ITEMS MAY SO NECESSITATE.
10. ALL PARTIAL AND FULL PENETRATION WELDS WHICH ARE EXPOSED TO VIEW SHALL BE GROUND SMOOTH AND FLUSH WITH FINISH SURFACE OF STEEL. HOLES SHALL BE FILLED WITH WELD METAL OR BODY SOLDER AND SMOOTHED BY GRINDING OR FILING.
11. CLEAN GROOVE PREPARATION THERMAL CUTS BY GRINDING.
12. WELDS SHALL BE TERMINATED AT THE END OF A JOINT IN A MANNER THAT WILL ENSURE SOUND WELDS. WHENEVER NECESSARY THIS SHALL BE DONE BY USE OF EXTENSION BARS AND RUN OFF TABS. RUN OFF TABS USED AT BEAM FLANGE CONNECTION SHALL BE REMOVED AND THE WELDS FINISHED TO A SMOOTH CONTOUR (1" RADIUS). NO WELD DAMS ARE ALLOWED.
13. AFTER FULL PENETRATION WELDING, THE BACKING BAR IS TO BE REMOVED, THE WELD ROOT INSPECTED AND TESTED FOR IMPERFECTIONS,WHICH IF FOUND, ARE TO BE REMOVED BY BACKGOUGING TO SOUND MATERIAL. THE BACKGOUGED AREA IS TO BE WELDED AND A FILLET WELD SHALL BE APPLIED TO REINFORCE THE JOINT. THE SIZE OF THE REINFORCING FILLET WELD SHALL BE EQUAL TO 1/4 THE PLATE THICKNESS, BUT NOT LESS THAN 1/4" NOR MORE THAN 3/8".
14. TO ASSURE THE PROPER AMPERAGE AND VOLTAGE OF THE WELDING PROCESS, THE USE OF A HAND HELD CALIBRATED AMP AND VOLT METER SHALL BE USED. THIS EQUIPMENT SHALL BE USED BY THE FABRICATOR, ERECTOR AND THE INSPECTORS. AMPERAGE AND VOLTAGE SHALL BE MEASURED AT THE ARC WITH THIS EQUIPMENT. TRAVEL SPEED AND ELECTRODE STICK OUT SHALL BE VERIFIED TO BE IN COMPLIANCE WITH THE ELECTRODE MANUFACTURER'S RECOMMENDATIONS.
15. ULTRASONIC TESTING IS REQUIRED FOR ALL PARTIAL AND COMPLETE PENETRATION WELDS. TEST GROVE WELDING ON CONTINUITY PLATES BY ULTRASONIC TESTING AFTER BEAM FLANGE WELD CONNECTION. TESTING SHALL BE PERFORMED NO SOONER THAN 24 HOURS AFTER COMPLETION OF WELDING. ALL WELDS SHALL BE CONSIDERED TENSION WELDS, U.N.O.

SHOTCRETE

1. 28 DAYS STRENGTH OF SHOTCRETE IN WALLS SHALL BE 6000 PSI BELOW TENTH FLOOR AND 8000 PSI ABOVE TENTH FLOOR. MIX DESIGN AND PLACEMENT OF SHOTCRETE TO BE OF SAME OR HIGHER QUALITY AND STRENGTH AS CONVENTIONALLY FORMED AND PLACED REINFORCED CONCRETE.
2. ALL THE REQUIREMENTS OF CITY OF LOS ANGELES "RULE OF GENERAL APPLICATION" WET MIX CONCRETE RGA #I-85 (SEE BELOW) AND ACI 506R-85 SHALL BE FOLLOWED FOR SHOTCRETE WORK, INCLUDING BUT NOT LIMITED TO PLACEMENT OF REINFORCING STEEL, TEST PANEL REQUIREMENTS AND CORES.
3. REINFORCING STEEL SHALL BE SECURELY TIED IN PLACE IN A MANNER THAT PREVENTS MOVEMENT DURING THE WET MIX SHOTCRETE APPLICATION.
4. THE HEIGHT OF A LAYER SHALL BE LIMITED TO NOT MORE THAN THREE FEET AND A SUCCEEDING LAYER SHALL NOT BE PLACED IN LESS THAN THREE HOURS. NO SLOUGHING OR SAGGING SHALL BE PERMITTED.
5. SLUMP SHALL BE 2" (+ OR - 1/2") AND SHALL BE MEASURED AT THE POINT OF DISCHARGE FROM THE MIXER (EXCEPT THE BUILDING INSPECTOR MAY REQUIRE SLUMP TESTS AT THE DISCHARGE POINT WHERE WATER MAY HAVE BEEN ADDED).
6. A CAPABLE NOZZLEMAN'S HELPER WITH AN AIR BLOW PIPE SHALL BE PROVIDED TO ASSIST THE NOZZLEMAN IN KEEPING ALL REBOUND BUILD-UP OUT OF THE WORK ADDITIONAL WORKERS MAY BE REQUIRED TO TAKE THE REBOUND FROM THE WORK IF THE REBOUND CANNOT BE REMOVED BY THE AIR BLOW PIPE.
7. THE CONTRACTOR SHALL AGREE TO PROVIDE A DESIGNATED LIAISON BETWEEN HIS CREW, THE TESTING AGENCY AND THE BUILDING INSPECTOR. ONE DEPUTY SHALL BE ASSIGNED TO EACH NOZZLE.
8. SPECIAL PLACEMENT METHODS SHALL BE USED BEHIND STEEL EMBEDDED PLATES, KEYWAYS, ETC. FOR PROPER CONSOLIDATION AND ELIMINATION OF ANY VOIDS OR AIR POCKETS.
9. SEE SPECIFICATION SECTION 03360 - PNEUMATICALLY PLACED CONCRETE AND STRUCTURAL CONCRETE SPECIFICATION 03300 FOR ADDITIONAL REQUIREMENTS.
10. SEE SPECIFICATION SECTION 03360 - PNEUMATICALLY PLACED CONCRETE AND STRUCTURAL CONCRETE SPECIFICATION 03300 FOR ADDITIONAL REQUIREMENTS.
11. AT LEAST 3 CORES OF EACH MIX OF SHOTCRETE USED IN EACH DAYS SHALL BE TAKEN FOR EACH 100 CU YDS., OR FRACTION THEREOF, PLACED, NOT SOONER THAN 4 DAYS AFTER IT IS PLACED. PREPARE AND TEST SPECIMENS IN COMPLIANCE WITH ASTM C 39 AND ASTM C 42. LOCATION OF SAMPLES WILL BE DESIGNATED BY THE OWNER'S REPRESENTATIVE SIZE SHALL BE 4 IN. IN DIAMETER. SEE SPECIFICATIONS FOR TEST PROCEDURE.
12. A TEST PANEL SHALL BE SHOT, CURED AND CORED AND TESTED PRIOR TO COMMENCEMENT OF THE PROJECT. THE SAMPLE PANEL SHALL BE REPRESENTATIVE OF THE PROJECT. THE SAMPLE PANEL SHALL BE REPRESENTATIVE OF THE PROJECT AND SIMULATE JOB CONDITIONS AS CLOSELY AS POSSIBLE. THE PANEL THICKNESS AND REINFORCING SHALL REPRODUCE THE THICKEST AND MOST CONGESTED AREA SPECIFIED IN THE STRUCTURAL DESIGN. IT SHALL BE SHOT AT THE SAME ANGLE, USING THE SAME NOZZLEMAN AND WITH THE SAME CONCRETE MIX DESIGN THAT WILL BE USED ON THE PROJECT.

NADEL
Architects Inc.

1990 So. Bundy Dr.
Fourth Floor
Los Angeles, CA 90025

T. 310.826.2100
F. 310.826.0182

www.nadelarc.com

CONSULTANT

NABIH YOUSSEF & ASSOCIATES
Structural Engineers
800 Wilshire Boulevard, Suite 200
Los Angeles, California 90017
TEL: (213) 362-0707
FAX: (213) 896-2018

REGISTERED PROFESSIONAL ENGINEER
NABIH F. G. YOUSSEF
No. 2026
Exp. 9/30/09
STRUCTURAL
STATE OF CALIFORNIA

COUNTY OF LOS ANGELES
THE HALL OF JUSTICE
STRUCTURAL RETROFIT PHASE

REVISIONS

1	
2	
3	
4	
5	
6	

DRAWING TITLE

GENERAL NOTES

SCOPING DOCUMENTS 100% SUBMISSION AUGUST 2010

SCALE :
DATE :
JOB NO : nya.05121.00

SHEET NO.
S1.00A

X:\2005\05121-Hall of Justice\S\S1-00A.dwg LAST PLOTTED ON Tue 07/08/08 - 11:47am

ALL DRAWINGS AND WRITTEN MATERIAL APPEARING HEREIN CONSTITUTE THE ORIGINAL AND UNPUBLISHED WORK OF THE ARCHITECT AND THE SAME MAY NOT BE DUPLICATED, USED OR DISCLOSED WITHOUT THE WRITTEN CONSENT OF THE ARCHITECT. COPYRIGHT: NADEL ARCHITECTS INC. ALL RIGHTS RESERVED.

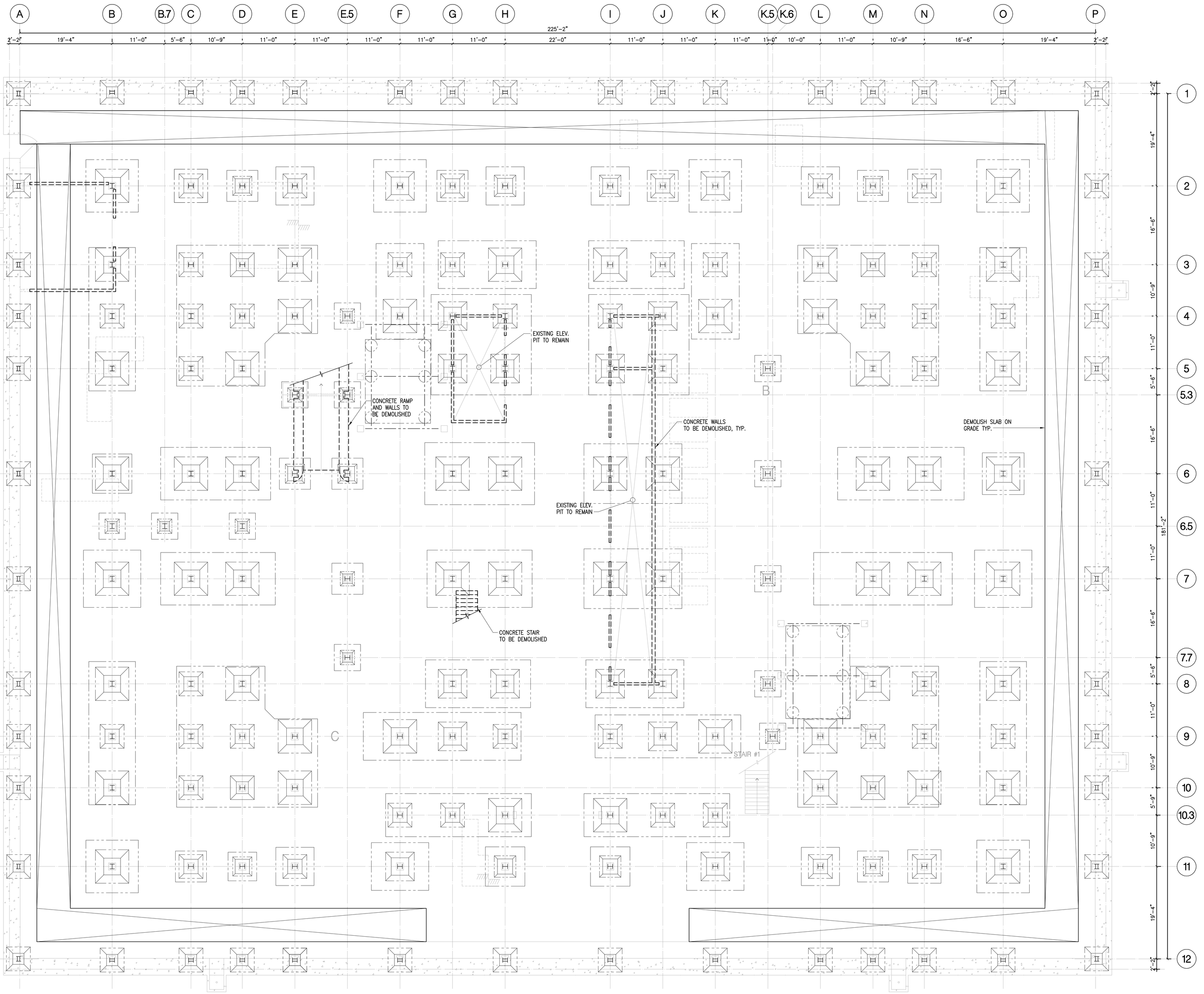

DEMOLITION NOTES / WALL MATERIALS LEGEND

1. VERIFY ALL EXISTING MATERIALS, DIMENSIONS, FLOOR ELEVATIONS, AND BUILDING CONDITIONS.
2. ALL STAIRS TO REMAIN EXCEPT AS INDICATED DASHED.
3. PROVIDE NEW OPENINGS IN EXISTING SLABS.
4. NOTES & SYMBOLS INDICATED APPLY TO THE GENERAL PROJECT. ALL NOTES DO NOT NECESSARILY APPLY TO ALL INDIVIDUAL SHEETS.
5. PROVIDE BARRIER IN ACCORDANCE WITH OSHA STANDARDS AT GRADE CHANGES & SLAB OPENINGS.
6. LEVEL CONCRETE SLAB FOR APPLICATION OF NEW ROOF IN ACCORDANCE WITH MANUFACTURE'S RECOMMENDATIONS.
7. REMOVE ALL MORTAR, METAL TIES, WOOD AND OTHER MATERIALS THAT PROJECTS BEYOND THE FACE OF THE URM AT HISTORIC STAIR AND LIGHTCOURT URM WALLS. SURFACE OF URM SHALL BE SMOOTH FOR INSTALLATION OF FIBER WRAP AND/OR STRONG BACKS.

- EXISTING STONE / TERRA-COTTA / MASONRY WITH OR WITHOUT STONE BASE TO REMAIN
- EXISTING CONCRETE WALL / COLUMN TO REMAIN
- EXISTING HOLLOW CLAY TILE PARTITION WITH STONE SURFACE TO REMAIN
- CONCRETE BLOCK WALL TO REMAIN
- PLASTER WITH OR WITHOUT MARBLE BASE AND/OR CERAMIC TILE ON HOLLOW CLAY TILE (HCT) FURRING OR PARTITION TO REMAIN.
- HOLLOW CLAY TILE PARTITION WITH PLASTER AND STONE BASE TO REMAIN
- HOLLOW CLAY TILE / UNREINFORCED MASONRY WITH NO FINISH TO REMAIN
- PLASTER / GYPSUM BOARD ON METAL STUD PARTITION OR FURRING TO REMAIN
- EXISTING OPENING IN FLOOR SLAB MAINTAIN BARRIER PER OSHA STANDARDS.
- CONCRETE WALL / TO BE DEMOLISHED
- CONCRETE BLOCK WALL TO BE DEMOLISHED
- PROVIDE NEW OPENING IN EXISTING FLOOR SLAB – PROVIDE BARRIER IN ACCORDANCE WITH OSHA STANDARDS.
- RAISED FLOOR / CONCRETE PAD TO BE DEMOLISHED TO MATCH EXISTING SURROUNDING FLOOR ELEVATION
- REMOVE PLYWOOD BOARDS FROM WINDOWS FOR INSTALLATION OF NEW WINDOW AND REHABILITATION OF EXISTING WINDOWS WHICH ARE TO REMAIN.

4' 8'
0' 2' 6' 16'

N

DEMOLITION FOUNDATION FLOOR PLAN | SCALE: 1/8"=1'-0" | 1

NADEL Architects Inc.
1990 So. Bundy Dr.
Fourth Floor
Los Angeles, CA 90025
T. 310.826.2100
F. 310.826.0182
www.nadelarc.com

CONSULTANT

NABIH YOUSSEF & ASSOCIATES
Structural Engineers
800 Wilshire Boulevard, Suite 200
Los Angeles, California 90017
TEL: (213) 362-0707
FAX: (213) 896-0018

REGISTERED PROFESSIONAL ENGINEER
NABIH F. G. YOUSSEF
No. 2026
Exp. 9/30/09
STRUCTURAL
STATE OF CALIFORNIA

COUNTY OF LOS ANGELES
THE HALL OF JUSTICE
STRUCTURAL RETROFIT PHASE

REVISIONS

1	
2	
3	
4	
5	
6	

DRAWING TITLE

DEMOLITION FOUNDATION FLOOR PLAN

SCALE : 1/8"=1'-0"
DATE :
JOB NO : nya.05121.00
SHEET NO.
(D)S2.00

SCOPING DOCUMENTS 100% SUBMISSION AUGUST 2010

K:\2005\05121-Hall of Justice\S\S102-00.dwg LAST PLOTTED ON Tue 07/08/08 – 11:47am

ALL DRAWINGS AND WRITTEN MATERIAL APPEARING HEREIN CONSTITUTE THE ORIGINAL AND UNPUBLISHED WORK OF THE ARCHITECT AND THE SAME MAY NOT BE DUPLICATED, USED OR DISCLOSED WITHOUT THE WRITTEN CONSENT OF THE ARCHITECT. COPYRIGHT: NADEL ARCHITECTS INC. ALL RIGHTS RESERVED.

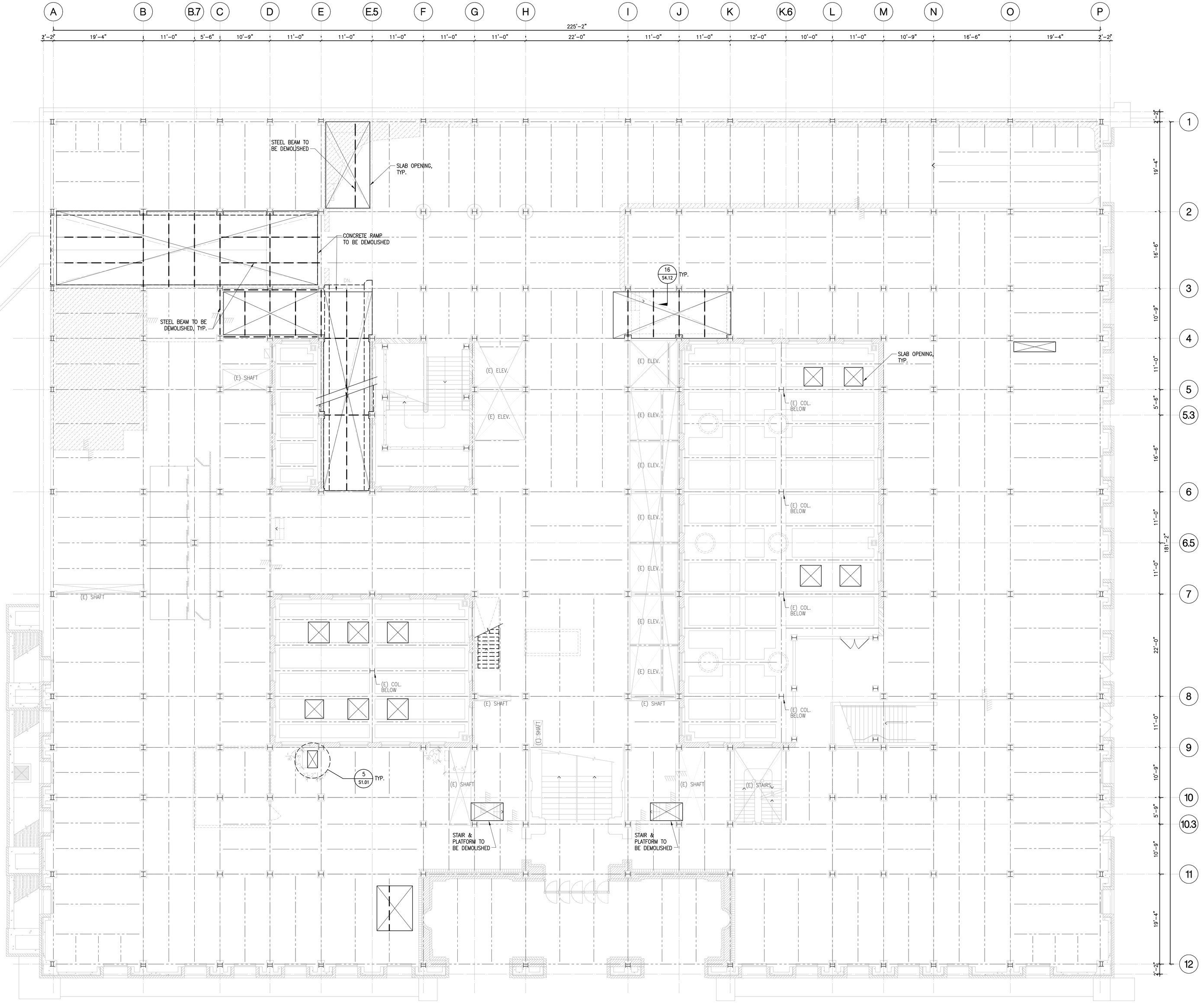

DEMOLITION NOTES / WALL MATERIALS LEGEND

1. VERIFY ALL EXISTING MATERIALS, DIMENSIONS, FLOOR ELEVATIONS, AND BUILDING CONDITIONS.
2. ALL STAIRS TO REMAIN EXCEPT AS INDICATED DASHED.
3. PROVIDE NEW OPENINGS IN EXISTING SLABS.
4. NOTES & SYMBOLS INDICATED APPLY TO THE GENERAL PROJECT. ALL NOTES DO NOT NECESSARILY APPLY TO ALL INDIVIDUAL SHEETS.
5. PROVIDE BARRIER IN ACCORDANCE WITH OSHA STANDARDS AT GRADE CHANGES & SLAB OPENINGS.
6. LEVEL CONCRETE SLAB FOR APPLICATION OF NEW ROOF IN ACCORDANCE WITH MANUFACTURE'S RECOMMENDATIONS.
7. REMOVE ALL MORTAR, METAL TIES, WOOD AND OTHER MATERIALS THAT PROJECTS BEYOND THE FACE OF THE URM AT HISTORIC STAIR AND LIGHTCOURT URM WALLS. SURFACE OF URM SHALL BE SMOOTH FOR INSTALLATION OF FIBER WRAP AND/OR STRONG BACKS.

- EXISTING STONE / TERRA-COTTA / MASONRY WITH OR WITHOUT STONE BASE TO REMAIN
- EXISTING CONCRETE WALL / COLUMN TO REMAIN
- EXISTING HOLLOW CLAY TILE PARTITION WITH STONE SURFACE TO REMAIN
- CONCRETE BLOCK WALL TO REMAIN
- PLASTER WITH OR WITHOUT MARBLE BASE AND/OR CERAMIC TILE ON HOLLOW CLAY TILE (HCT) FURRING OR PARTITION TO REMAIN.
- HOLLOW CLAY TILE PARTITION WITH PLASTER AND STONE BASE TO REMAIN
- HOLLOW CLAY TILE / UNREINFORCED MASONRY WITH NO FINISH TO REMAIN
- PLASTER / GYPSUM BOARD ON METAL STUD PARTITION OR FURRING TO REMAIN
- EXISTING OPENING IN FLOOR SLAB MAINTAIN BARRIER PER OSHA STANDARDS.
- CONCRETE WALL / TO BE DEMOLISHED
- CONCRETE BLOCK WALL TO BE DEMOLISHED
- PROVIDE NEW OPENING IN EXISTING FLOOR SLAB – PROVIDE BARRIER IN ACCORDANCE WITH OSHA STANDARDS.
- RAISED FLOOR / CONCRETE PAD TO BE DEMOLISHED TO MATCH EXISTING SURROUNDING FLOOR ELEVATION
- REMOVE PLYWOOD BOARDS FROM WINDOWS FOR INSTALLATION OF NEW WINDOW AND REHABILITATION OF EXISTING WINDOWS WHICH ARE TO REMAIN.

DEMOLITION FIRST FLOOR PLAN | SCALE: 1/8"=1'-0" | 1

NADEL Architects Inc.
1990 So. Bundy Dr.
Fourth Floor
Los Angeles, CA 90025
T. 310.826.2100
F. 310.826.0182
www.nadelarc.com

CONSULTANT

NABIH YOUSSEF & ASSOCIATES
Structural Engineers
800 Wilshire Boulevard, Suite 200
Los Angeles, California 90017
TEL: (213) 362-0707
FAX: (213) 896-0018
REGISTERED PROFESSIONAL ENGINEER
NABIH F. G. YOUSSEF
No. 2026
Exp. 9/30/09
STRUCTURAL
STATE OF CALIFORNIA

COUNTY OF LOS ANGELES
THE HALL OF JUSTICE
STRUCTURAL RETROFIT PHASE

REVISIONS

1	
2	
3	
4	
5	
6	

DRAWING TITLE

DEMOLITION FIRST FLOOR PLAN

SCALE : 1/8"=1'-0"
DATE :
JOB NO : nya.05121.00
SHEET NO.
(D)S2.01

SCOPING DOCUMENTS 100% SUBMISSION AUGUST 2010

X:\2005\05121-Hall of Justice\S\S102-01.dwg LAST PLOTTED ON Tue 07/08/08 - 11:43am

ALL DRAWINGS AND WRITTEN MATERIAL APPEARING HEREIN CONSTITUTE THE ORIGINAL AND UNPUBLISHED WORK OF THE ARCHITECT AND THE SAME MAY NOT BE DUPLICATED, USED OR DISCLOSED WITHOUT THE WRITTEN CONSENT OF THE ARCHITECT. COPYRIGHT: NADEL ARCHITECTS INC. ALL RIGHTS RESERVED.

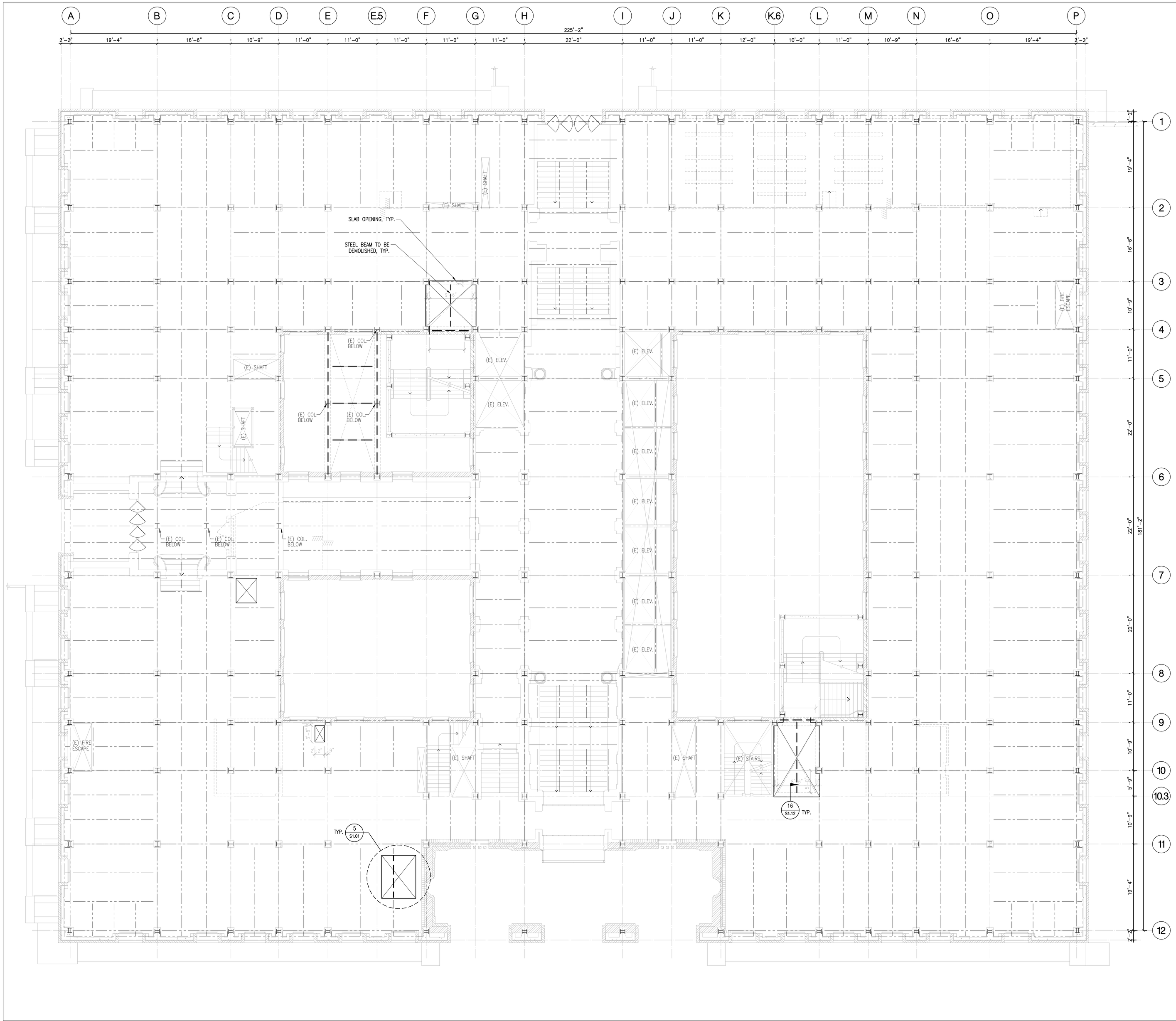

DEMOLITION NOTES / WALL MATERIALS LEGEND

1. VERIFY ALL EXISTING MATERIALS, DIMENSIONS, FLOOR ELEVATIONS, AND BUILDING CONDITIONS.
2. ALL STAIRS TO REMAIN EXCEPT AS INDICATED DASHED.
3. PROVIDE NEW OPENINGS IN EXISTING SLABS.
4. NOTES & SYMBOLS INDICATED APPLY TO THE GENERAL PROJECT. ALL NOTES DO NOT NECESSARILY APPLY TO ALL INDIVIDUAL SHEETS.
5. PROVIDE BARRIER IN ACCORDANCE WITH OSHA STANDARDS AT GRADE CHANGES & SLAB OPENINGS.
6. LEVEL CONCRETE SLAB FOR APPLICATION OF NEW ROOF IN ACCORDANCE WITH MANUFACTURE'S RECOMMENDATIONS.
7. REMOVE ALL MORTAR, METAL TIES, WOOD AND OTHER MATERIALS THAT PROJECTS BEYOND THE FACE OF THE URM AT HISTORIC STAIR AND LIGHTCOURT URM WALLS. SURFACE OF URM SHALL BE SMOOTH FOR INSTALLATION OF FIBER WRAP AND/OR STRONG BACKS.

- EXISTING STONE / TERRA-COTTA / MASONRY WITH OR WITHOUT STONE BASE TO REMAIN
- EXISTING CONCRETE WALL / COLUMN TO REMAIN
- EXISTING HOLLOW CLAY TILE PARTITION WITH STONE SURFACE TO REMAIN
- CONCRETE BLOCK WALL TO REMAIN
- PLASTER WITH OR WITHOUT MARBLE BASE AND/OR CERAMIC TILE ON HOLLOW CLAY TILE (HCT) FURRING OR PARTITION TO REMAIN.
- HOLLOW CLAY TILE PARTITION WITH PLASTER AND STONE BASE TO REMAIN
- HOLLOW CLAY TILE / UNREINFORCED MASONRY WITH NO FINISH TO REMAIN
- PLASTER / GYPSUM BOARD ON METAL STUD PARTITION OR FURRING TO REMAIN
- EXISTING OPENING IN FLOOR SLAB MAINTAIN BARRIER PER OSHA STANDARDS.
- CONCRETE WALL / TO BE DEMOLISHED
- CONCRETE BLOCK WALL TO BE DEMOLISHED
- PROVIDE NEW OPENING IN EXISTING FLOOR SLAB – PROVIDE BARRIER IN ACCORDANCE WITH OSHA STANDARDS.
- RAISED FLOOR / CONCRETE PAD TO BE DEMOLISHED TO MATCH EXISTING SURROUNDING FLOOR ELEVATION
- REMOVE PLYWOOD BOARDS FROM WINDOWS FOR INSTALLATION OF NEW WINDOW AND REHABILITATION OF EXISTING WINDOWS WHICH ARE TO REMAIN.

NADEL Architects Inc.

1990 So. Bundy Dr.
Fourth Floor
Los Angeles, CA 90025

T. 310.826.2100
F. 310.826.0182

www.nadelarc.com

CONSULTANT

NABIH YOUSSEF & ASSOCIATES
Structural Engineers
800 Wilshire Boulevard, Suite 200
Los Angeles, California 90017
TEL: (213) 362-0707
FAX: (213) 688-3018

REGISTERED PROFESSIONAL ENGINEER
NABIH F. G. YOUSSEF
No. 2026
Exp. 9/30/09
STRUCTURAL
STATE OF CALIFORNIA

COUNTY OF LOS ANGELES
THE HALL OF JUSTICE
STRUCTURAL RETROFIT PHASE

REVISIONS

DRAWING TITLE

DEMOLITION SECOND FLOOR PLAN

SCOPING DOCUMENTS 100% SUBMISSION AUGUST 2010

SCALE : 1/8"=1'-0"
DATE :
JOB NO : nya.05121.00
SHEET NO.
(D)S2.02

DEMOLITION SECOND FLOOR PLAN | SCALE: 1/8"=1'-0" | 1

X:\2005\05121-Hall of Justice\S\S102-02.dwg LAST PLOTTED ON Tue 07/08/08 - 11:47am

ALL DRAWINGS AND WRITTEN MATERIAL APPEARING HEREIN CONSTITUTE THE ORIGINAL AND UNPUBLISHED WORK OF THE ARCHITECT AND THE SAME MAY NOT BE DUPLICATED, USED OR DISCLOSED WITHOUT THE WRITTEN CONSENT OF THE ARCHITECT. COPYRIGHT: NADEL ARCHITECTS INC. ALL RIGHTS RESERVED.

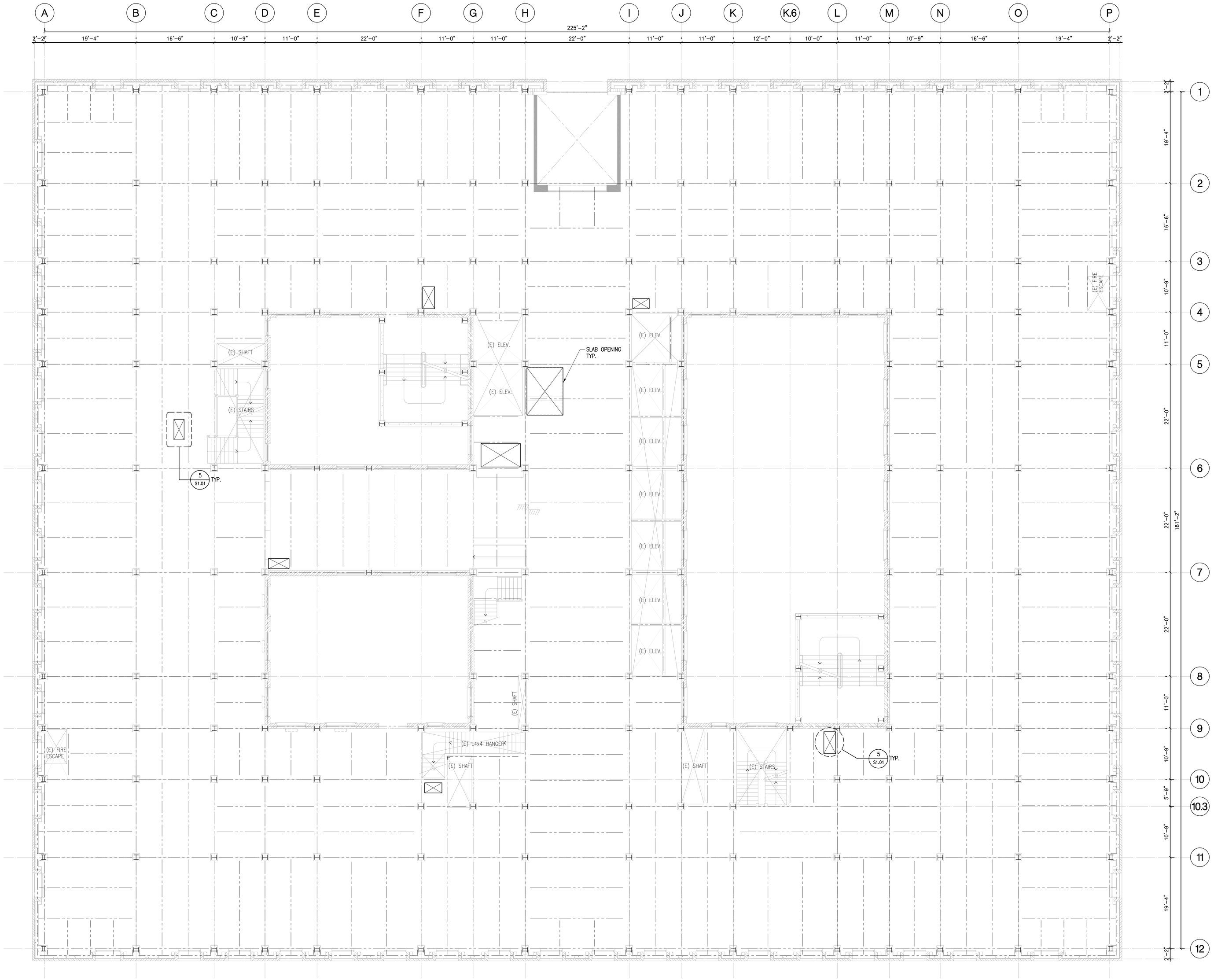

DEMOLITION NOTES / WALL MATERIALS LEGEND

1. VERIFY ALL EXISTING MATERIALS, DIMENSIONS, FLOOR ELEVATIONS, AND BUILDING CONDITIONS.
2. ALL STAIRS TO REMAIN EXCEPT AS INDICATED DASHED.
3. PROVIDE NEW OPENINGS IN EXISTING SLABS.
4. NOTES & SYMBOLS INDICATED APPLY TO THE GENERAL PROJECT. ALL NOTES DO NOT NECESSARILY APPLY TO ALL INDIVIDUAL SHEETS.
5. PROVIDE BARRIER IN ACCORDANCE WITH OSHA STANDARDS AT GRADE CHANGES & SLAB OPENINGS.
6. LEVEL CONCRETE SLAB FOR APPLICATION OF NEW ROOF IN ACCORDANCE WITH MANUFACTURE'S RECOMMENDATIONS.
7. REMOVE ALL MORTAR, METAL TIES, WOOD AND OTHER MATERIALS THAT PROJECTS BEYOND THE FACE OF THE URM AT HISTORIC STAIR AND LIGHTCOURT URM WALLS. SURFACE OF URM SHALL BE SMOOTH FOR INSTALLATION OF FIBER WRAP AND/OR STRONG BACKS.

- EXISTING STONE / TERRA-COTTA / MASONRY WITH OR WITHOUT STONE BASE TO REMAIN
- EXISTING CONCRETE WALL / COLUMN TO REMAIN
- EXISTING HOLLOW CLAY TILE PARTITION WITH STONE SURFACE TO REMAIN
- CONCRETE BLOCK WALL TO REMAIN
- PLASTER WITH OR WITHOUT MARBLE BASE AND/OR CERAMIC TILE ON HOLLOW CLAY TILE (HCT) FURRING OR PARTITION TO REMAIN.
- HOLLOW CLAY TILE PARTITION WITH PLASTER AND STONE BASE TO REMAIN
- HOLLOW CLAY TILE / UNREINFORCED MASONRY WITH NO FINISH TO REMAIN
- PLASTER / GYPSUM BOARD ON METAL STUD PARTITION OR FURRING TO REMAIN
- EXISTING OPENING IN FLOOR SLAB MAINTAIN BARRIER PER OSHA STANDARDS.
- CONCRETE WALL / TO BE DEMOLISHED
- CONCRETE BLOCK WALL TO BE DEMOLISHED
- PROVIDE NEW OPENING IN EXISTING FLOOR SLAB – PROVIDE BARRIER IN ACCORDANCE WITH OSHA STANDARDS.
- RAISED FLOOR / CONCRETE PAD TO BE DEMOLISHED TO MATCH EXISTING SURROUNDING FLOOR ELEVATION
- REMOVE PLYWOOD BOARDS FROM WINDOWS FOR INSTALLATION OF NEW WINDOW AND REHABILITATION OF EXISTING WINDOWS WHICH ARE TO REMAIN.

NADEL Architects Inc.

1990 So. Bundy Dr.
Fourth Floor
Los Angeles, CA 90025

T. 310.826.2100
F. 310.826.0182

www.nadelarc.com

CONSULTANT

NABIH YOUSSEF & ASSOCIATES
Structural Engineers
800 Wilshire Boulevard, Suite 200
Los Angeles, California 90017
TEL: (213) 362-0707
FAX: (213) 688-3018

REGISTERED PROFESSIONAL ENGINEER NABIH F. G. YOUSSEF No. 2026 Exp. 9/30/09 STRUCTURAL STATE OF CALIFORNIA

COUNTY OF LOS ANGELES
THE HALL OF JUSTICE
STRUCTURAL RETROFIT PHASE

REVISIONS

DRAWING TITLE

DEMOLITION THIRD FLOOR PLAN

SCOPING DOCUMENTS 100% SUBMISSION AUGUST 2010

SCALE : 1/8"=1'-0"
DATE :
JOB NO : nya.05121.00
SHEET NO.
(D)S2.03

DEMOLITION THIRD FLOOR PLAN | SCALE: 1/8"=1'-0" | 1

X:\2005\05121-Hall of Justice\S\S102-03.dwg LAST PLOTTED ON Tue 07/08/08 - 11:47am

ALL DRAWINGS AND WRITTEN MATERIAL APPEARING HEREIN CONSTITUTE THE ORIGINAL AND UNPUBLISHED WORK OF THE ARCHITECT AND THE SAME MAY NOT BE DUPLICATED, USED OR DISCLOSED WITHOUT THE WRITTEN CONSENT OF THE ARCHITECT. COPYRIGHT: NADEL ARCHITECTS INC. ALL RIGHTS RESERVED.

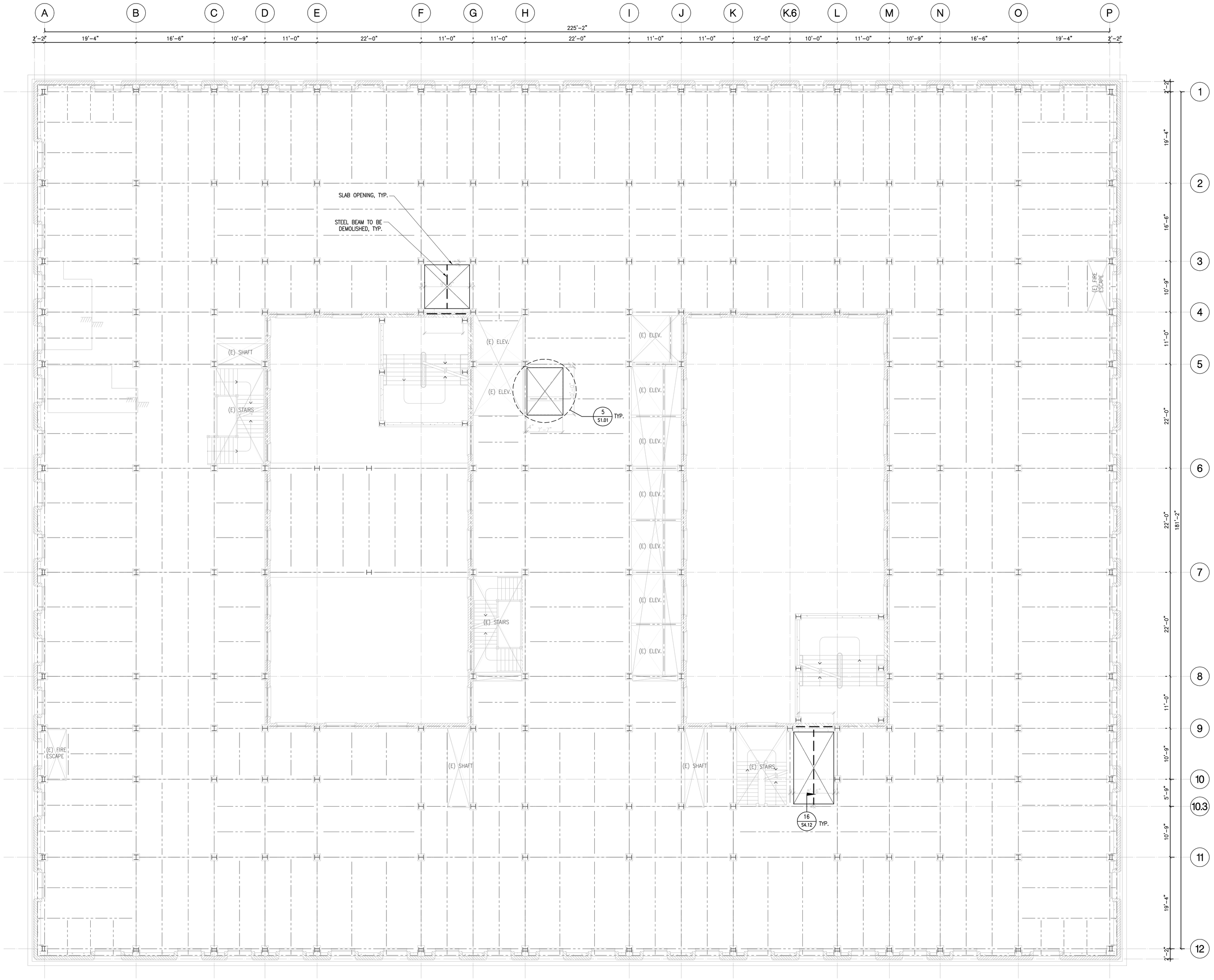

DEMOLITION NOTES / WALL MATERIALS LEGEND

1. VERIFY ALL EXISTING MATERIALS, DIMENSIONS, FLOOR ELEVATIONS, AND BUILDING CONDITIONS.
2. ALL STAIRS TO REMAIN EXCEPT AS INDICATED DASHED.
3. PROVIDE NEW OPENINGS IN EXISTING SLABS.
4. NOTES & SYMBOLS INDICATED APPLY TO THE GENERAL PROJECT. ALL NOTES DO NOT NECESSARILY APPLY TO ALL INDIVIDUAL SHEETS.
5. PROVIDE BARRIER IN ACCORDANCE WITH OSHA STANDARDS AT GRADE CHANGES & SLAB OPENINGS.
6. LEVEL CONCRETE SLAB FOR APPLICATION OF NEW ROOF IN ACCORDANCE WITH MANUFACTURE'S RECOMMENDATIONS.
7. REMOVE ALL MORTAR, METAL TIES, WOOD AND OTHER MATERIALS THAT PROJECTS BEYOND THE FACE OF THE URM AT HISTORIC STAIR AND LIGHTCOURT URM WALLS. SURFACE OF URM SHALL BE SMOOTH FOR INSTALLATION OF FIBER WRAP AND/OR STRONG BACKS.

- EXISTING STONE / TERRA-COTTA / MASONRY WITH OR WITHOUT STONE BASE TO REMAIN
- EXISTING CONCRETE WALL / COLUMN TO REMAIN
- EXISTING HOLLOW CLAY TILE PARTITION WITH STONE SURFACE TO REMAIN
- CONCRETE BLOCK WALL TO REMAIN
- PLASTER WITH OR WITHOUT MARBLE BASE AND/OR CERAMIC TILE ON HOLLOW CLAY TILE (HCT) FURRING OR PARTITION TO REMAIN.
- HOLLOW CLAY TILE PARTITION WITH PLASTER AND STONE BASE TO REMAIN
- HOLLOW CLAY TILE / UNREINFORCED MASONRY WITH NO FINISH TO REMAIN
- PLASTER / GYPSUM BOARD ON METAL STUD PARTITION OR FURRING TO REMAIN
- EXISTING OPENING IN FLOOR SLAB MAINTAIN BARRIER PER OSHA STANDARDS.
- CONCRETE WALL / TO BE DEMOLISHED
- CONCRETE BLOCK WALL TO BE DEMOLISHED
- PROVIDE NEW OPENING IN EXISTING FLOOR SLAB – PROVIDE BARRIER IN ACCORDANCE WITH OSHA STANDARDS.
- RAISED FLOOR / CONCRETE PAD TO BE DEMOLISHED TO MATCH EXISTING SURROUNDING FLOOR ELEVATION
- REMOVE PLYWOOD BOARDS FROM WINDOWS FOR INSTALLATION OF NEW WINDOW AND REHABILITATION OF EXISTING WINDOWS WHICH ARE TO REMAIN.

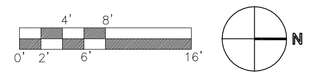

DEMOLITION FOURTH FLOOR PLAN | SCALE: 1/8"=1'-0" | 1

NADEL Architects Inc.

1990 So. Bundy Dr.
Fourth Floor
Los Angeles, CA 90025

T. 310.826.2100
F. 310.826.0182

www.nadelarc.com

CONSULTANT

NABIH YOUSSEF & ASSOCIATES
Structural Engineers
800 Wilshire Boulevard, Suite 200
Los Angeles, California 90017
TEL: (213) 362-0707
FAX: (213) 688-3018

REGISTERED PROFESSIONAL ENGINEER
NABIH F. G. YOUSSEF
No. 2026
Exp. 9/30/09
STRUCTURAL
STATE OF CALIFORNIA

COUNTY OF LOS ANGELES
THE HALL OF JUSTICE
STRUCTURAL RETROFIT PHASE

REVISIONS

DRAWING TITLE

DEMOLITION FOURTH FLOOR PLAN

SCOPING DOCUMENTS 100% SUBMISSION AUGUST 2010

SCALE : 1/8"=1'-0"
DATE :
JOB NO : nya.05121.00
SHEET NO.
(D)S2.04

X:\2005\05121-Hall of Justice\S\S102-04.dwg LAST PLOTTED ON Tue 07/08/08 - 11:48am

ALL DRAWINGS AND WRITTEN MATERIAL APPEARING HEREIN CONSTITUTE THE ORIGINAL AND UNPUBLISHED WORK OF THE ARCHITECT AND THE SAME MAY NOT BE DUPLICATED, USED OR DISCLOSED WITHOUT THE WRITTEN CONSENT OF THE ARCHITECT. COPYRIGHT: NADEL ARCHITECTS INC. ALL RIGHTS RESERVED.

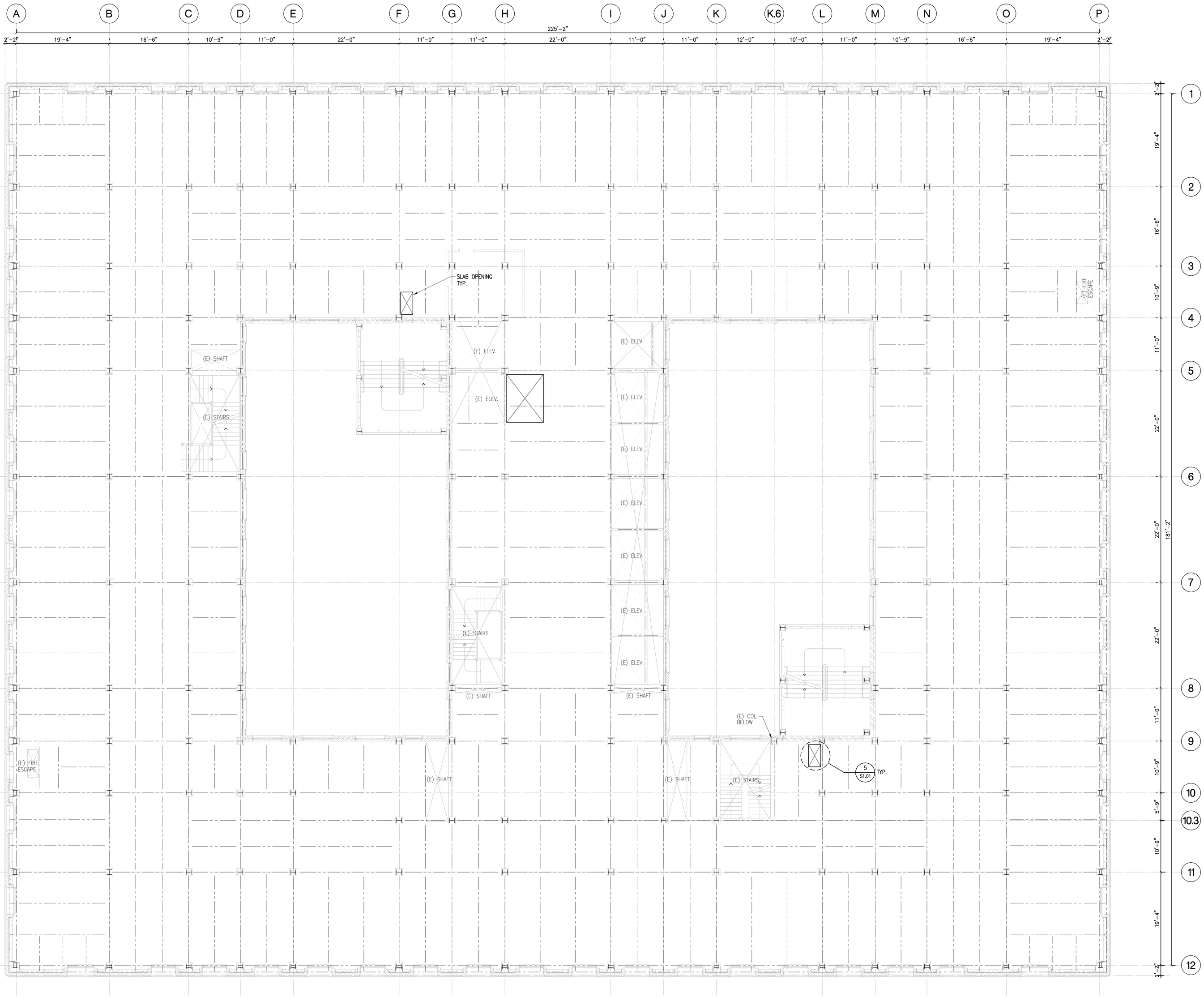

DEMOLITION NOTES / WALL MATERIALS LEGEND

1. VERIFY ALL EXISTING MATERIALS, DIMENSIONS, FLOOR ELEVATIONS, AND BUILDING CONDITIONS.
2. ALL STAIRS TO REMAIN EXCEPT AS INDICATED DASHED.
3. PROVIDE NEW OPENINGS IN EXISTING SLABS.
4. NOTES & SYMBOLS INDICATED APPLY TO THE GENERAL PROJECT. ALL NOTES DO NOT NECESSARILY APPLY TO ALL INDIVIDUAL SHEETS.
5. PROVIDE BARRIER IN ACCORDANCE WITH OSHA STANDARDS AT GRADE CHANGES & SLAB OPENINGS.
6. LEVEL CONCRETE SLAB FOR APPLICATION OF NEW ROOF IN ACCORDANCE WITH MANUFACTURE'S RECOMMENDATIONS.
7. REMOVE ALL MORTAR, METAL TIES, WOOD AND OTHER MATERIALS THAT PROJECTS BEYOND THE FACE OF THE URM AT HISTORIC STAIR AND LIGHTCOURT URM WALLS. SURFACE OF URM SHALL BE SMOOTH FOR INSTALLATION OF FIBER WRAP AND/OR STRONG BACKS.

- EXISTING STONE / TERRA-COTTA / MASONRY WITH OR WITHOUT STONE BASE TO REMAIN
- EXISTING CONCRETE WALL / COLUMN TO REMAIN
- EXISTING HOLLOW CLAY TILE PARTITION WITH STONE SURFACE TO REMAIN
- CONCRETE BLOCK WALL TO REMAIN
- PLASTER WITH OR WITHOUT MARBLE BASE AND/OR CERAMIC TILE ON HOLLOW CLAY TILE (HCT) FURRING OR PARTITION TO REMAIN.
- HOLLOW CLAY TILE PARTITION WITH PLASTER AND STONE BASE TO REMAIN
- HOLLOW CLAY TILE / UNREINFORCED MASONRY WITH NO FINISH TO REMAIN
- PLASTER / GYPSUM BOARD ON METAL STUD PARTITION OR FURRING TO REMAIN
- EXISTING OPENING IN FLOOR SLAB MAINTAIN BARRIER PER OSHA STANDARDS.
- CONCRETE WALL / TO BE DEMOLISHED
- CONCRETE BLOCK WALL TO BE DEMOLISHED
- PROVIDE NEW OPENING IN EXISTING FLOOR SLAB – PROVIDE BARRIER IN ACCORDANCE WITH OSHA STANDARDS.
- RAISED FLOOR / CONCRETE PAD TO BE DEMOLISHED TO MATCH EXISTING SURROUNDING FLOOR ELEVATION
- REMOVE PLYWOOD BOARDS FROM WINDOWS FOR INSTALLATION OF NEW WINDOW AND REHABILITATION OF EXISTING WINDOWS WHICH ARE TO REMAIN.

4' 8' 0" 2" 6" 16"

N

DEMOLITION FIFTH FLOOR PLAN | SCALE: 1/8"=1'-0" | 1

NADEL Architects Inc.

1990 So. Bundy Dr.
Fourth Floor
Los Angeles, CA 90025

T. 310.826.2100
F. 310.826.0182

www.nadelarc.com

CONSULTANT

NABIH YOUSSEF & ASSOCIATES
Structural Engineers
800 Wilshire Boulevard, Suite 200
Los Angeles, California 90017
TEL: (213) 362-0707
FAX: (213) 896-0018

REGISTERED PROFESSIONAL ENGINEER
NABIH F. G. YOUSSEF
No. 2026
Exp. 9/30/09
STRUCTURAL
STATE OF CALIFORNIA

COUNTY OF LOS ANGELES
THE HALL OF JUSTICE
STRUCTURAL RETROFIT PHASE

REVISIONS

1	
2	
3	
4	
5	
6	

DRAWING TITLE

DEMOLITION FIFTH FLOOR PLAN

SCALE : 1/8"=1'-0"
DATE :
JOB NO : nya.05121.00
SHEET NO.

(D)S2.05

SCOPING DOCUMENTS 100% SUBMISSION AUGUST 2010

K:\2005\05121-Hall of Justice\S\S102-05.dwg LAST PLOTTED ON Tue 07/08/08 – 11:48am

ALL DRAWINGS AND WRITTEN MATERIAL APPEARING HEREIN CONSTITUTE THE ORIGINAL AND UNPUBLISHED WORK OF THE ARCHITECT AND THE SAME MAY NOT BE DUPLICATED, USED OR DISCLOSED WITHOUT THE WRITTEN CONSENT OF THE ARCHITECT. COPYRIGHT: NADEL ARCHITECTS INC. ALL RIGHTS RESERVED.

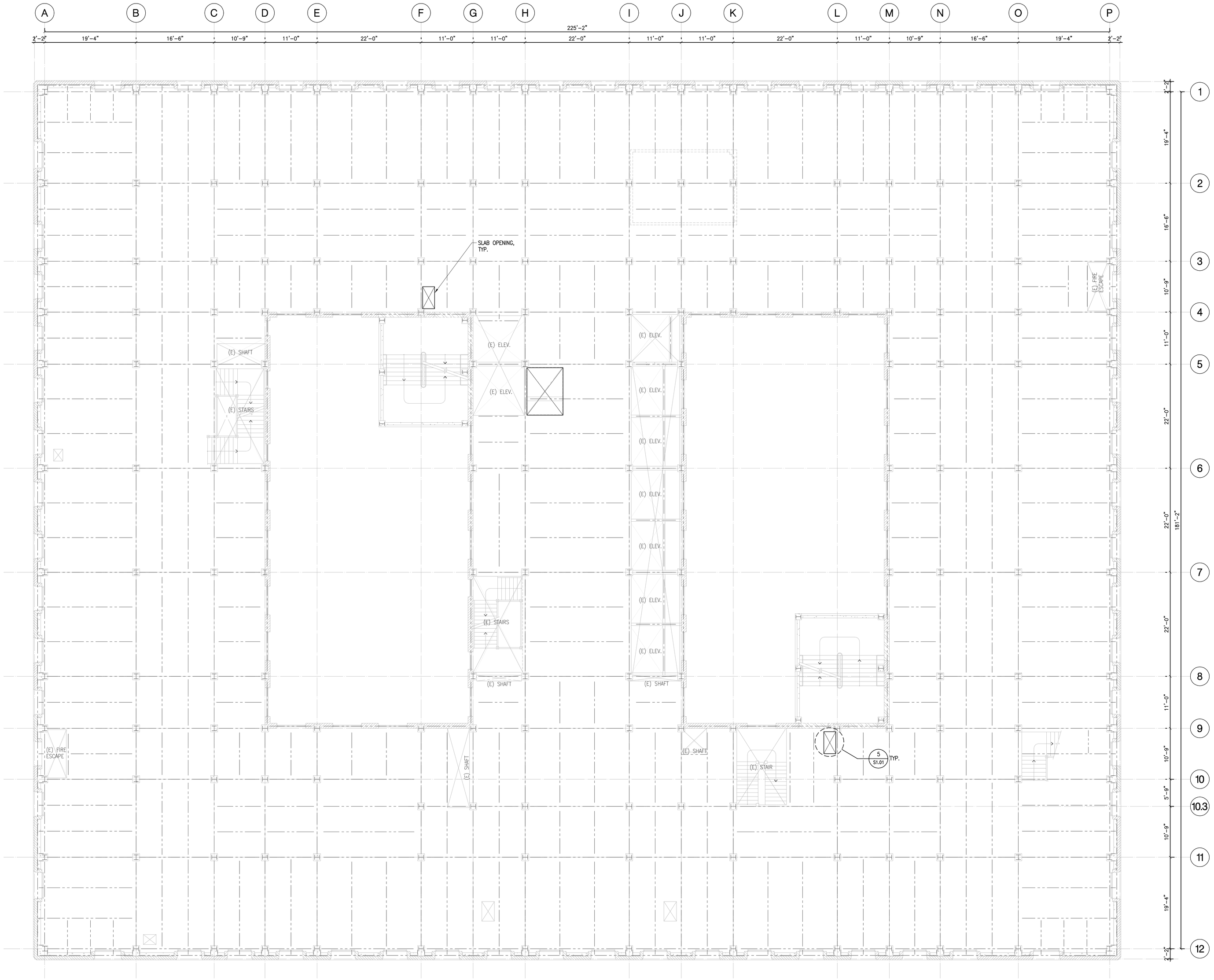

DEMOLITION NOTES / WALL MATERIALS LEGEND

1. VERIFY ALL EXISTING MATERIALS, DIMENSIONS, FLOOR ELEVATIONS, AND BUILDING CONDITIONS.
2. ALL STAIRS TO REMAIN EXCEPT AS INDICATED DASHED.
3. PROVIDE NEW OPENINGS IN EXISTING SLABS.
4. NOTES & SYMBOLS INDICATED APPLY TO THE GENERAL PROJECT. ALL NOTES DO NOT NECESSARILY APPLY TO ALL INDIVIDUAL SHEETS.
5. PROVIDE BARRIER IN ACCORDANCE WITH OSHA STANDARDS AT GRADE CHANGES & SLAB OPENINGS.
6. LEVEL CONCRETE SLAB FOR APPLICATION OF NEW ROOF IN ACCORDANCE WITH MANUFACTURE'S RECOMMENDATIONS.
7. REMOVE ALL MORTAR, METAL TIES, WOOD AND OTHER MATERIALS THAT PROJECTS BEYOND THE FACE OF THE URM AT HISTORIC STAIR AND LIGHTCOURT URM WALLS. SURFACE OF URM SHALL BE SMOOTH FOR INSTALLATION OF FIBER WRAP AND/OR STRONG BACKS.

- EXISTING STONE / TERRA-COTTA / MASONRY WITH OR WITHOUT STONE BASE TO REMAIN
- EXISTING CONCRETE WALL / COLUMN TO REMAIN
- EXISTING HOLLOW CLAY TILE PARTITION WITH STONE SURFACE TO REMAIN
- CONCRETE BLOCK WALL TO REMAIN
- PLASTER WITH OR WITHOUT MARBLE BASE AND/OR CERAMIC TILE ON HOLLOW CLAY TILE (HCT) FURRING OR PARTITION TO REMAIN.
- HOLLOW CLAY TILE PARTITION WITH PLASTER AND STONE BASE TO REMAIN
- HOLLOW CLAY TILE / UNREINFORCED MASONRY WITH NO FINISH TO REMAIN
- PLASTER / GYPSUM BOARD ON METAL STUD PARTITION OR FURRING TO REMAIN
- EXISTING OPENING IN FLOOR SLAB MAINTAIN BARRIER PER OSHA STANDARDS.
- CONCRETE WALL / TO BE DEMOLISHED
- CONCRETE BLOCK WALL TO BE DEMOLISHED
- PROVIDE NEW OPENING IN EXISTING FLOOR SLAB – PROVIDE BARRIER IN ACCORDANCE WITH OSHA STANDARDS.
- RAISED FLOOR / CONCRETE PAD TO BE DEMOLISHED TO MATCH EXISTING SURROUNDING FLOOR ELEVATION
- REMOVE PLYWOOD BOARDS FROM WINDOWS FOR INSTALLATION OF NEW WINDOW AND REHABILITATION OF EXISTING WINDOWS WHICH ARE TO REMAIN.

NADEL
Architects Inc.

1990 So. Bundy Dr.
Fourth Floor
Los Angeles, CA 90025

T. 310.826.2100
F. 310.826.0182

www.nadelarc.com

CONSULTANT

NABIH YOUSSEF & ASSOCIATES
Structural Engineers
800 Wilshire Boulevard, Suite 200
Los Angeles, California 90017
TEL: (213) 362-0707
FAX: (213) 688-3018

REGISTERED PROFESSIONAL ENGINEER
NABIH F. G. YOUSSEF
No. 2026
Exp. 9/30/09
STRUCTURAL
STATE OF CALIFORNIA

COUNTY OF LOS ANGELES
THE HALL OF JUSTICE
STRUCTURAL RETROFIT PHASE

REVISIONS

DRAWING TITLE

DEMOLITION SIXTH FLOOR PLAN

SCOPING DOCUMENTS 100% SUBMISSION AUGUST 2010

SCALE : 1/8"=1'-0"
DATE :
JOB NO : nya.05121.00
SHEET NO.
(D)S2.06

DEMOLITION SIXTH FLOOR PLAN | SCALE: 1/8"=1'-0" | 1

X:\2005\05121-Hall of Justice\S\S102-06.dwg LAST PLOTTED ON Tue 07/08/08 - 11:48am

ALL DRAWINGS AND WRITTEN MATERIAL APPEARING HEREIN CONSTITUTE THE ORIGINAL AND UNPUBLISHED WORK OF THE ARCHITECT AND THE SAME MAY NOT BE DUPLICATED, USED OR DISCLOSED WITHOUT THE WRITTEN CONSENT OF THE ARCHITECT. COPYRIGHT: NADEL ARCHITECTS INC. ALL RIGHTS RESERVED.

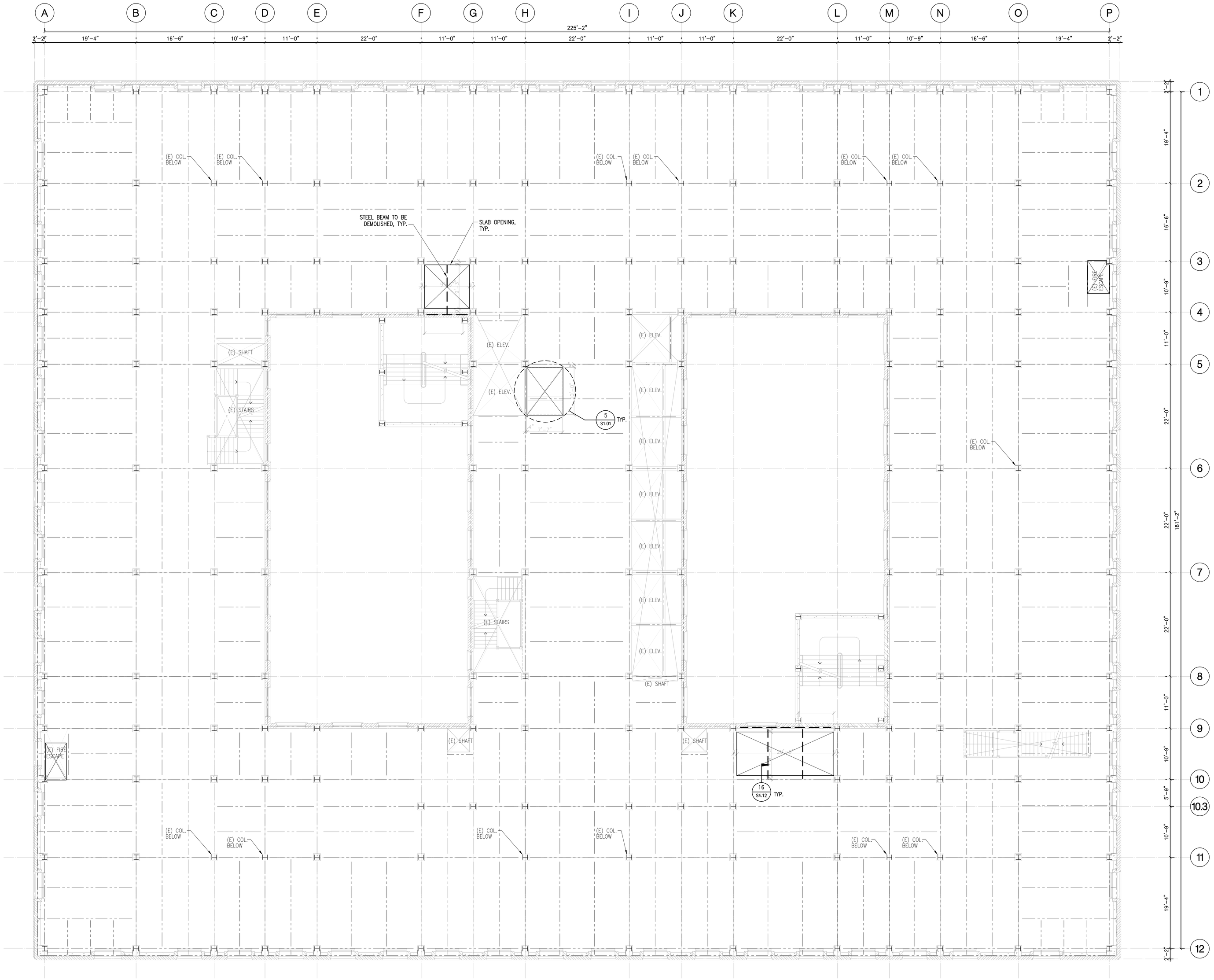

DEMOLITION NOTES / WALL MATERIALS LEGEND

1. VERIFY ALL EXISTING MATERIALS, DIMENSIONS, FLOOR ELEVATIONS, AND BUILDING CONDITIONS.
2. ALL STAIRS TO REMAIN EXCEPT AS INDICATED DASHED.
3. PROVIDE NEW OPENINGS IN EXISTING SLABS.
4. NOTES & SYMBOLS INDICATED APPLY TO THE GENERAL PROJECT. ALL NOTES DO NOT NECESSARILY APPLY TO ALL INDIVIDUAL SHEETS.
5. PROVIDE BARRIER IN ACCORDANCE WITH OSHA STANDARDS AT GRADE CHANGES & SLAB OPENINGS.
6. LEVEL CONCRETE SLAB FOR APPLICATION OF NEW ROOF IN ACCORDANCE WITH MANUFACTURE'S RECOMMENDATIONS.
7. REMOVE ALL MORTAR, METAL TIES, WOOD AND OTHER MATERIALS THAT PROJECTS BEYOND THE FACE OF THE URM AT HISTORIC STAIR AND LIGHTCOURT URM WALLS. SURFACE OF URM SHALL BE SMOOTH FOR INSTALLATION OF FIBER WRAP AND/OR STRONG BACKS.

- EXISTING STONE / TERRA-COTTA / MASONRY WITH OR WITHOUT STONE BASE TO REMAIN
- EXISTING CONCRETE WALL / COLUMN TO REMAIN
- EXISTING HOLLOW CLAY TILE PARTITION WITH STONE SURFACE TO REMAIN
- CONCRETE BLOCK WALL TO REMAIN
- PLASTER WITH OR WITHOUT MARBLE BASE AND/OR CERAMIC TILE ON HOLLOW CLAY TILE (HCT) FURRING OR PARTITION TO REMAIN.
- HOLLOW CLAY TILE PARTITION WITH PLASTER AND STONE BASE TO REMAIN
- HOLLOW CLAY TILE / UNREINFORCED MASONRY WITH NO FINISH TO REMAIN
- PLASTER / GYPSUM BOARD ON METAL STUD PARTITION OR FURRING TO REMAIN
- EXISTING OPENING IN FLOOR SLAB MAINTAIN BARRIER PER OSHA STANDARDS.
- CONCRETE WALL / TO BE DEMOLISHED
- CONCRETE BLOCK WALL TO BE DEMOLISHED
- PROVIDE NEW OPENING IN EXISTING FLOOR SLAB – PROVIDE BARRIER IN ACCORDANCE WITH OSHA STANDARDS.
- RAISED FLOOR / CONCRETE PAD TO BE DEMOLISHED TO MATCH EXISTING SURROUNDING FLOOR ELEVATION
- REMOVE PLYWOOD BOARDS FROM WINDOWS FOR INSTALLATION OF NEW WINDOW AND REHABILITATION OF EXISTING WINDOWS WHICH ARE TO REMAIN.

NADEL Architects Inc.

1990 So. Bundy Dr.
Fourth Floor
Los Angeles, CA 90025

T. 310.826.2100
F. 310.826.0182

www.nadelarc.com

CONSULTANT

NABIH YOUSSEF & ASSOCIATES
Structural Engineers
800 Wilshire Boulevard, Suite 200
Los Angeles, California 90017
TEL: (213) 362-0707
FAX: (213) 688-3018

REGISTERED PROFESSIONAL ENGINEER NABIH F. G. YOUSSEF No. 2026 Exp. 9/30/09 STRUCTURAL STATE OF CALIFORNIA

COUNTY OF LOS ANGELES
THE HALL OF JUSTICE
STRUCTURAL RETROFIT PHASE

REVISIONS

DRAWING TITLE

DEMOLITION SEVENTH FLOOR PLAN

SCOPING DOCUMENTS 100% SUBMISSION AUGUST 2010

SCALE : 1/8"=1'-0"
DATE :
JOB NO : nya.05121.00
SHEET NO.
(D)S2.07

DEMOLITION SEVENTH FLOOR PLAN | SCALE: 1/8"=1'-0" | 1

X:\2005\05121-Hall of Justice\S\S102-07.dwg LAST PLOTTED ON Tue 07/08/08 - 11:48am

ALL DRAWINGS AND WRITTEN MATERIAL APPEARING HEREIN CONSTITUTE THE ORIGINAL AND UNPUBLISHED WORK OF THE ARCHITECT AND THE SAME MAY NOT BE DUPLICATED, USED OR DISCLOSED WITHOUT THE WRITTEN CONSENT OF THE ARCHITECT. COPYRIGHT: NADEL ARCHITECTS INC. ALL RIGHTS RESERVED.

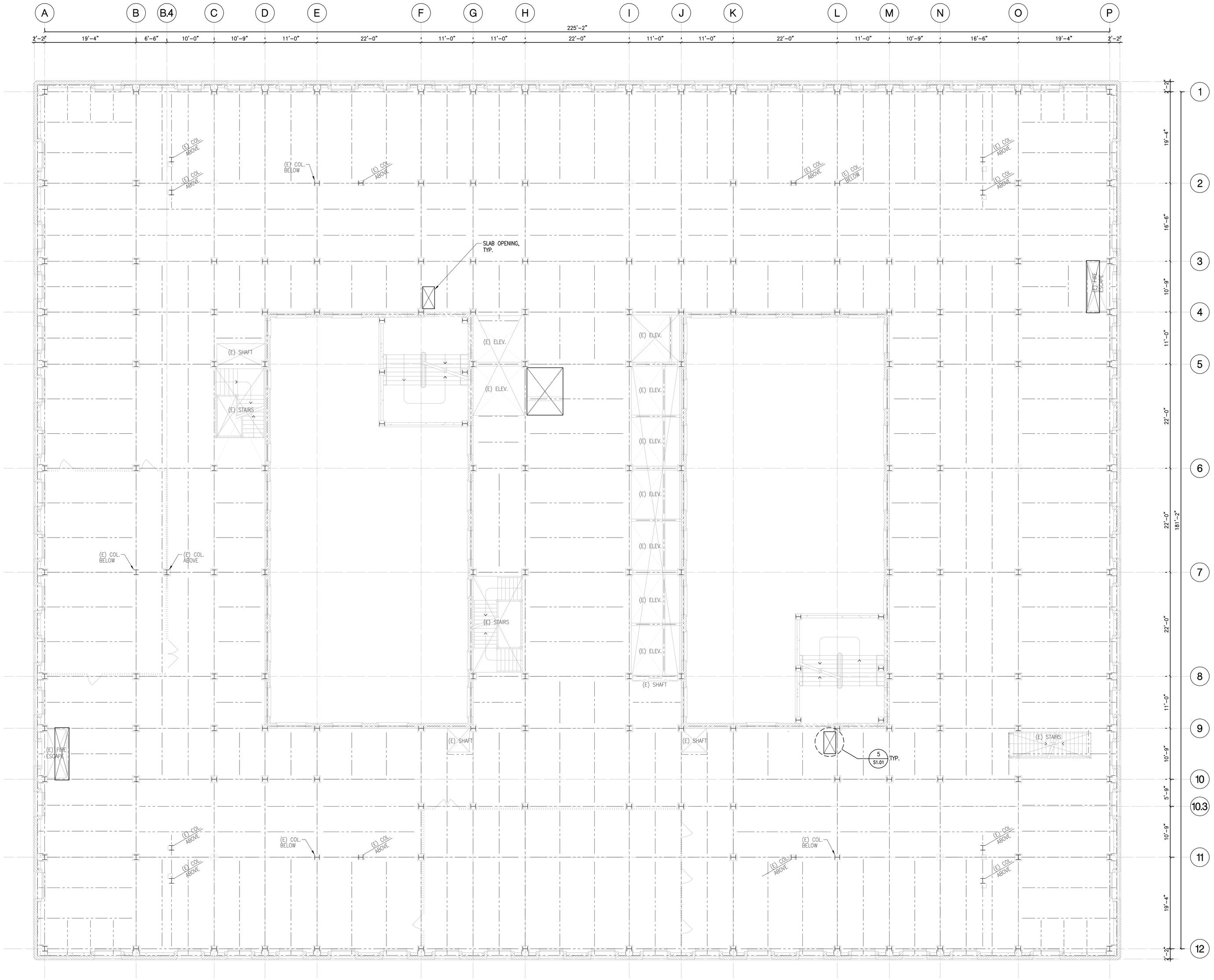

DEMOLITION NOTES / WALL MATERIALS LEGEND

1. VERIFY ALL EXISTING MATERIALS, DIMENSIONS, FLOOR ELEVATIONS, AND BUILDING CONDITIONS.
2. ALL STAIRS TO REMAIN EXCEPT AS INDICATED DASHED.
3. PROVIDE NEW OPENINGS IN EXISTING SLABS.
4. NOTES & SYMBOLS INDICATED APPLY TO THE GENERAL PROJECT. ALL NOTES DO NOT NECESSARILY APPLY TO ALL INDIVIDUAL SHEETS.
5. PROVIDE BARRIER IN ACCORDANCE WITH OSHA STANDARDS AT GRADE CHANGES & SLAB OPENINGS.
6. LEVEL CONCRETE SLAB FOR APPLICATION OF NEW ROOF IN ACCORDANCE WITH MANUFACTURE'S RECOMMENDATIONS.
7. REMOVE ALL MORTAR, METAL TIES, WOOD AND OTHER MATERIALS THAT PROJECTS BEYOND THE FACE OF THE URM AT HISTORIC STAIR AND LIGHTCOURT URM WALLS. SURFACE OF URM SHALL BE SMOOTH FOR INSTALLATION OF FIBER WRAP AND/OR STRONG BACKS.

- EXISTING STONE / TERRA-COTTA / MASONRY WITH OR WITHOUT STONE BASE TO REMAIN
- EXISTING CONCRETE WALL / COLUMN TO REMAIN
- EXISTING HOLLOW CLAY TILE PARTITION WITH STONE SURFACE TO REMAIN
- CONCRETE BLOCK WALL TO REMAIN
- PLASTER WITH OR WITHOUT MARBLE BASE AND/OR CERAMIC TILE ON HOLLOW CLAY TILE (HCT) FURRING OR PARTITION TO REMAIN.
- HOLLOW CLAY TILE PARTITION WITH PLASTER AND STONE BASE TO REMAIN
- HOLLOW CLAY TILE / UNREINFORCED MASONRY WITH NO FINISH TO REMAIN
- PLASTER / GYPSUM BOARD ON METAL STUD PARTITION OR FURRING TO REMAIN
- EXISTING OPENING IN FLOOR SLAB MAINTAIN BARRIER PER OSHA STANDARDS.
- CONCRETE WALL / TO BE DEMOLISHED
- CONCRETE BLOCK WALL TO BE DEMOLISHED
- PROVIDE NEW OPENING IN EXISTING FLOOR SLAB – PROVIDE BARRIER IN ACCORDANCE WITH OSHA STANDARDS.
- RAISED FLOOR / CONCRETE PAD TO BE DEMOLISHED TO MATCH EXISTING SURROUNDING FLOOR ELEVATION
- REMOVE PLYWOOD BOARDS FROM WINDOWS FOR INSTALLATION OF NEW WINDOW AND REHABILITATION OF EXISTING WINDOWS WHICH ARE TO REMAIN.

NADEL Architects Inc.

1990 So. Bundy Dr.
Fourth Floor
Los Angeles, CA 90025

T. 310.826.2100
F. 310.826.0182

www.nadelarc.com

CONSULTANT

NABIH YOUSSEF & ASSOCIATES
Structural Engineers
800 Wilshire Boulevard, Suite 200
Los Angeles, California 90017
TEL: (213) 362-0707
FAX: (213) 688-3018

REGISTERED PROFESSIONAL ENGINEER
NABIH F. G. YOUSSEF
No. 2026
Exp. 9/30/09
STRUCTURAL
STATE OF CALIFORNIA

COUNTY OF LOS ANGELES
THE HALL OF JUSTICE
STRUCTURAL RETROFIT PHASE

REVISIONS

DRAWING TITLE

DEMOLITION EIGHTH FLOOR PLAN

SCOPING DOCUMENTS 100% SUBMISSION AUGUST 2010

SCALE : 1/8"=1'-0"
DATE :
JOB NO : nya.05121.00
SHEET NO.

(D)S2.08

DEMOLITION EIGHTHFLOOR PLAN | SCALE: 1/8"=1'-0" | 1

X:\2005\05121-Hall of Justice\S\S102-08.dwg LAST PLOTTED ON Tue 07/08/08 - 11:48am

ALL DRAWINGS AND WRITTEN MATERIAL APPEARING HEREIN CONSTITUTE THE ORIGINAL AND UNPUBLISHED WORK OF THE ARCHITECT AND THE SAME MAY NOT BE DUPLICATED, USED OR DISCLOSED WITHOUT THE WRITTEN CONSENT OF THE ARCHITECT. COPYRIGHT: NADEL ARCHITECTS INC. ALL RIGHTS RESERVED.

ALL DIMENSIONS AND MATERIAL AMPERAND CONDITIONS MUST BE VERIFIED ON JOB BEFORE ANY ORDERING OR FABRICATION OF MATERIALS OR WORK. DO NOT SCALE DRAWINGS. ALL DRAWINGS AND WRITTEN MATERIAL APPEARING HEREIN CONSTITUTE THE ORIGINAL AND UNPUBLISHED WORK OF THE ARCHITECT AND THE SAME MAY NOT BE DUPLICATED, USED OR DISCLOSED WITHOUT THE WRITTEN CONSENT OF THE ARCHITECT. COPYRIGHT: NADEL ARCHITECTS INC. ALL RIGHTS RESERVED.

N:\2005\05121-HAR 07 Jaskirt\S\S120-D8.dwg LAST PLOTTED ON Tue 07/08/08 - 11:48am

DEMOLITION NINTH FLOOR PLAN

SCALE: 1/8"=1'-0"

1

N

0' 2' 4' 8' 16'

BUILDING LINE

(E) OPENING

(E) OPENING

(E) OPENING

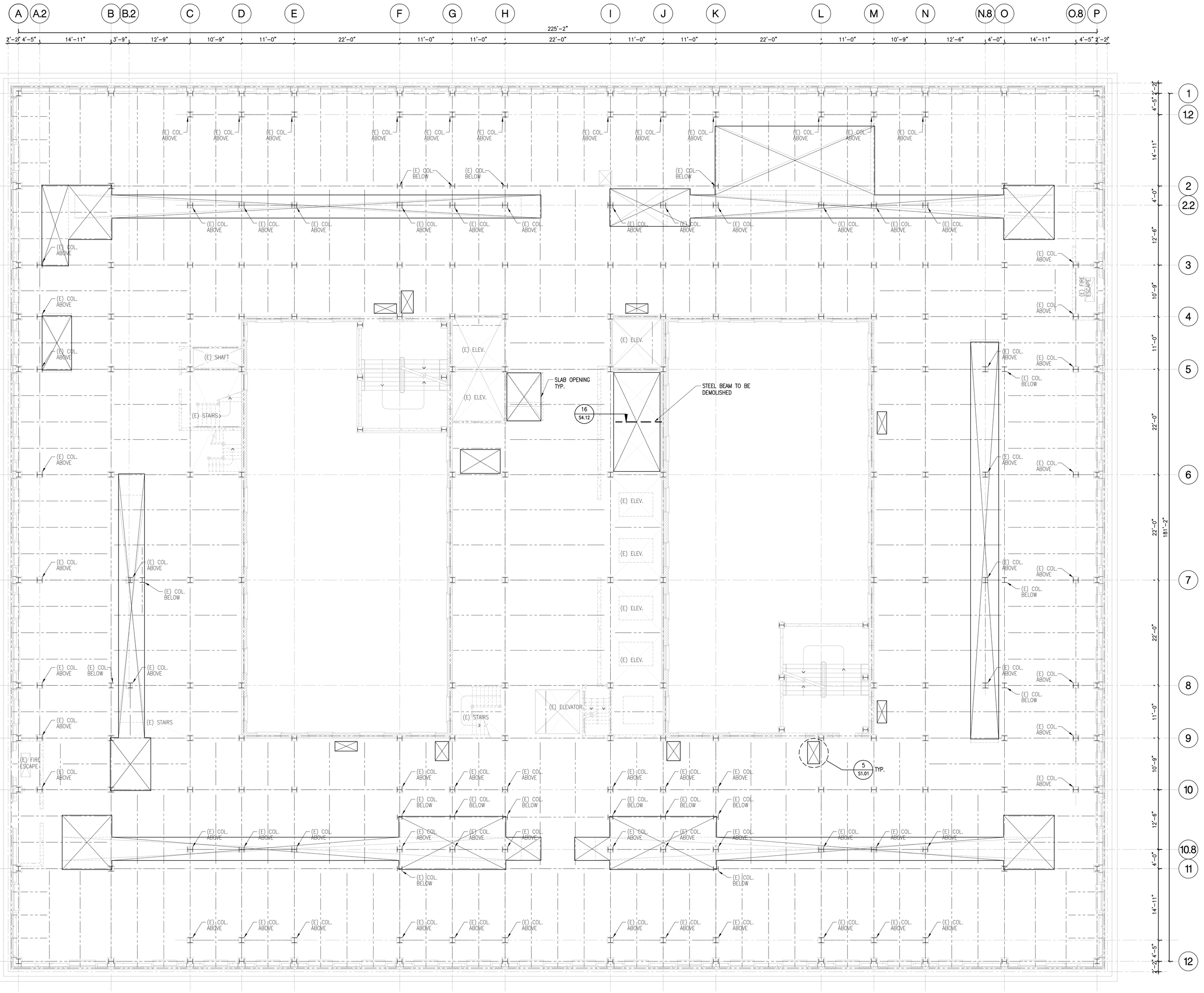

DEMOLITION NOTES / WALL MATERIALS LEGEND

1. VERIFY ALL EXISTING MATERIALS, DIMENSIONS, FLOOR ELEVATIONS, AND BUILDING CONDITIONS.
2. ALL STAIRS TO REMAIN EXCEPT AS INDICATED DASHED.
3. PROVIDE NEW OPENINGS IN EXISTING SLABS.
4. NOTES & SYMBOLS INDICATED APPLY TO THE GENERAL PROJECT. ALL NOTES DO NOT NECESSARILY APPLY TO ALL INDIVIDUAL SHEETS.
5. PROVIDE BARRIER IN ACCORDANCE WITH OSHA STANDARDS AT GRADE CHANGES & SLAB OPENINGS.
6. LEVEL CONCRETE SLAB FOR APPLICATION OF NEW ROOF IN ACCORDANCE WITH MANUFACTURE'S RECOMMENDATIONS.
7. REMOVE ALL MORTAR, METAL TIES, WOOD AND OTHER MATERIALS THAT PROJECTS BEYOND THE FACE OF THE URM AT HISTORIC STAIR AND LIGHTCOURT URM WALLS. SURFACE OF URM SHALL BE SMOOTH FOR INSTALLATION OF FIBER WRAP AND/OR STRONG BACKS.

- EXISTING STONE / TERRA-COTTA / MASONRY WITH OR WITHOUT STONE BASE TO REMAIN
- EXISTING CONCRETE WALL / COLUMN TO REMAIN
- EXISTING HOLLOW CLAY TILE PARTITION WITH STONE SURFACE TO REMAIN
- CONCRETE BLOCK WALL TO REMAIN
- PLASTER WITH OR WITHOUT MARBLE BASE AND/OR CERAMIC TILE ON HOLLOW CLAY TILE (HCT) FURRING OR PARTITION TO REMAIN.
- HOLLOW CLAY TILE PARTITION WITH PLASTER AND STONE BASE TO REMAIN
- HOLLOW CLAY TILE / UNREINFORCED MASONRY WITH NO FINISH TO REMAIN
- PLASTER / GYPSUM BOARD ON METAL STUD PARTITION OR FURRING TO REMAIN
- EXISTING OPENING IN FLOOR SLAB MAINTAIN BARRIER PER OSHA STANDARDS.
- CONCRETE WALL / TO BE DEMOLISHED
- CONCRETE BLOCK WALL TO BE DEMOLISHED
- PROVIDE NEW OPENING IN EXISTING FLOOR SLAB – PROVIDE BARRIER IN ACCORDANCE WITH OSHA STANDARDS.
- RAISED FLOOR / CONCRETE PAD TO BE DEMOLISHED TO MATCH EXISTING SURROUNDING FLOOR ELEVATION
- REMOVE PLYWOOD BOARDS FROM WINDOWS FOR INSTALLATION OF NEW WINDOW AND REHABILITATION OF EXISTING WINDOWS WHICH ARE TO REMAIN.

4' 8' 0" 2" 6" 16"

N

DEMOLITION TENTH FLOOR PLAN | SCALE: 1/8"=1'-0" | 1

NADEL Architects Inc.

1990 So. Bundy Dr.
Fourth Floor
Los Angeles, CA 90025

T. 310.826.2100
F. 310.826.0182

www.nadelarc.com

CONSULTANT

NABIH YOUSSEF & ASSOCIATES
Structural Engineers
800 Wilshire Boulevard, Suite 200
Los Angeles, California 90017
TEL: (213) 362-0707
FAX: (213) 896-0018

REGISTERED PROFESSIONAL ENGINEER
NABIH F. G. YOUSSEF
No. 2026
Exp. 9/30/09
STRUCTURAL
STATE OF CALIFORNIA

COUNTY OF LOS ANGELES
THE HALL OF JUSTICE
STRUCTURAL RETROFIT PHASE

REVISIONS

1	
2	
3	
4	
5	
6	

DRAWING TITLE

DEMOLITION TENTH FLOOR PLAN

SCOPING DOCUMENTS 100% SUBMISSION AUGUST 2010

SCALE : 1/8"=1'-0"
DATE :
JOB NO : nya.05121.00
SHEET NO.

(D)S2.10

K:\2005\05121-Hall of Justice\S\S102-10.dwg LAST PLOTTED ON Tue 07/08/08 - 11:48am

ALL DRAWINGS AND WRITTEN MATERIAL APPEARING HEREIN CONSTITUTE THE ORIGINAL AND UNPUBLISHED WORK OF THE ARCHITECT AND THE SAME MAY NOT BE DUPLICATED, USED OR DISCLOSED WITHOUT THE WRITTEN CONSENT OF THE ARCHITECT. COPYRIGHT: NADEL ARCHITECTS INC. ALL RIGHTS RESERVED.

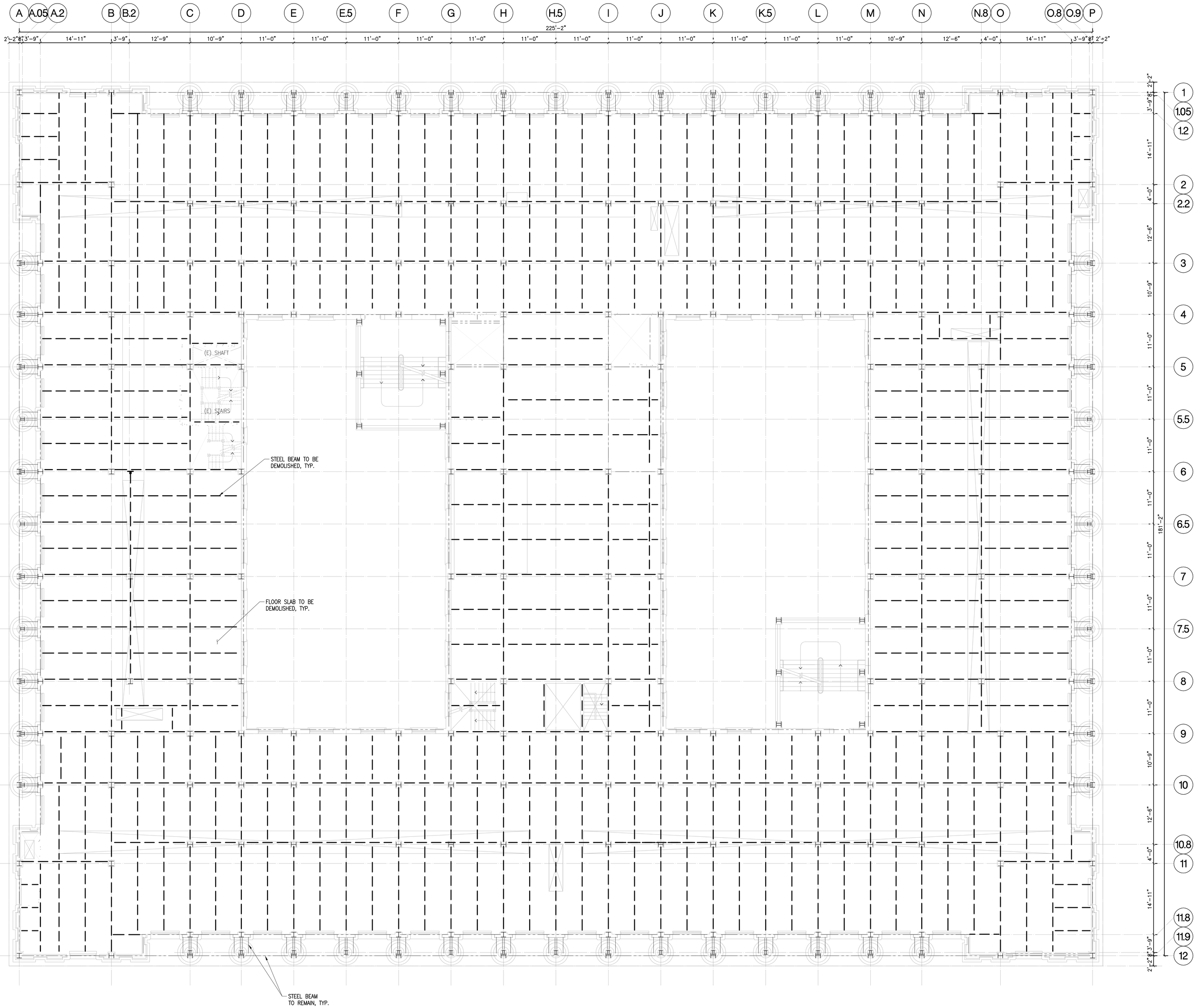

DEMOLITION NOTES / WALL MATERIALS LEGEND

1. VERIFY ALL EXISTING MATERIALS, DIMENSIONS, FLOOR ELEVATIONS, AND BUILDING CONDITIONS.
2. ALL STAIRS TO REMAIN EXCEPT AS INDICATED DASHED.
3. PROVIDE NEW OPENINGS IN EXISTING SLABS.
4. NOTES & SYMBOLS INDICATED APPLY TO THE GENERAL PROJECT. ALL NOTES DO NOT NECESSARILY APPLY TO ALL INDIVIDUAL SHEETS.
5. PROVIDE BARRIER IN ACCORDANCE WITH OSHA STANDARDS AT GRADE CHANGES & SLAB OPENINGS.
6. LEVEL CONCRETE SLAB FOR APPLICATION OF NEW ROOF IN ACCORDANCE WITH MANUFACTURE'S RECOMMENDATIONS.
7. REMOVE ALL MORTAR, METAL TIES, WOOD AND OTHER MATERIALS THAT PROJECTS BEYOND THE FACE OF THE URM AT HISTORIC STAIR AND LIGHTCOURT URM WALLS. SURFACE OF URM SHALL BE SMOOTH FOR INSTALLATION OF FIBER WRAP AND/OR STRONG BACKS.

- EXISTING STONE / TERRA-COTTA / MASONRY WITH OR WITHOUT STONE BASE TO REMAIN
- EXISTING CONCRETE WALL / COLUMN TO REMAIN
- EXISTING HOLLOW CLAY TILE PARTITION WITH STONE SURFACE TO REMAIN
- CONCRETE BLOCK WALL TO REMAIN
- PLASTER WITH OR WITHOUT MARBLE BASE AND/OR CERAMIC TILE ON HOLLOW CLAY TILE (HCT) FURRING OR PARTITION TO REMAIN.
- HOLLOW CLAY TILE PARTITION WITH PLASTER AND STONE BASE TO REMAIN
- HOLLOW CLAY TILE / UNREINFORCED MASONRY WITH NO FINISH TO REMAIN
- PLASTER / GYPSUM BOARD ON METAL STUD PARTITION OR FURRING TO REMAIN
- EXISTING OPENING IN FLOOR SLAB MAINTAIN BARRIER PER OSHA STANDARDS.
- CONCRETE WALL / TO BE DEMOLISHED
- CONCRETE BLOCK WALL TO BE DEMOLISHED
- PROVIDE NEW OPENING IN EXISTING FLOOR SLAB – PROVIDE BARRIER IN ACCORDANCE WITH OSHA STANDARDS.
- RAISED FLOOR / CONCRETE PAD TO BE DEMOLISHED TO MATCH EXISTING SURROUNDING FLOOR ELEVATION
- REMOVE PLYWOOD BOARDS FROM WINDOWS FOR INSTALLATION OF NEW WINDOW AND REHABILITATION OF EXISTING WINDOWS WHICH ARE TO REMAIN.

DEMOLITION ELEVENTH FLOOR PLAN | SCALE: 1/8"=1'-0" | 1

NADEL Architects Inc.
1990 So. Bundy Dr.
Fourth Floor
Los Angeles, CA 90025
T. 310.826.2100
F. 310.826.0182
www.nadelarc.com

CONSULTANT

NABIH YOUSSEF & ASSOCIATES
Structural Engineers
800 Wilshire Boulevard, Suite 200
Los Angeles, California 90017
TEL: (213) 362-0707
FAX: (213) 896-0018

REGISTERED PROFESSIONAL ENGINEER
NABIH F. G. YOUSSEF
No. 2026
Exp. 9/30/09
STRUCTURAL
STATE OF CALIFORNIA

COUNTY OF LOS ANGELES
THE HALL OF JUSTICE
STRUCTURAL RETROFIT PHASE

REVISIONS

1	
2	
3	
4	
5	
6	

DRAWING TITLE

DEMOLITION ELEVENTH FLOOR PLAN

SCALE : 1/8"=1'-0"
DATE :
JOB NO : nya.05121.00
SHEET NO.

(D)S2.11

SCOPING DOCUMENTS 100% SUBMISSION AUGUST 2010

X:\2005\05121-Hall of Justice\S\S102-11.dwg LAST PLOTTED ON Tue 07/08/08 - 11:48am

ALL DRAWINGS AND WRITTEN MATERIAL APPEARING HEREIN CONSTITUTE THE ORIGINAL AND UNPUBLISHED WORK OF THE ARCHITECT AND THE SAME MAY NOT BE DUPLICATED, USED OR DISCLOSED WITHOUT THE WRITTEN CONSENT OF THE ARCHITECT. COPYRIGHT: NADEL ARCHITECTS INC. ALL RIGHTS RESERVED.

ALL DRAWINGS AND WRITTEN MATERIAL APPEARING HEREIN CONSTITUTE THE ORIGINAL AND UNPUBLISHED WORK OF THE ARCHITECT AND THE SAME MAY NOT BE DUPLICATED, USED OR DISCLOSED WITHOUT THE WRITTEN CONSENT OF THE ARCHITECT. COPYRIGHT: NADEL ARCHITECTS INC. ALL RIGHTS RESERVED.

N:\2005\05121-HAR R2.RTD 08/07/08 - 11:48:44 AM

DEMOLITION TWELFTH FLOOR PLAN

SCALE: 1/8"=1'-0" | 1

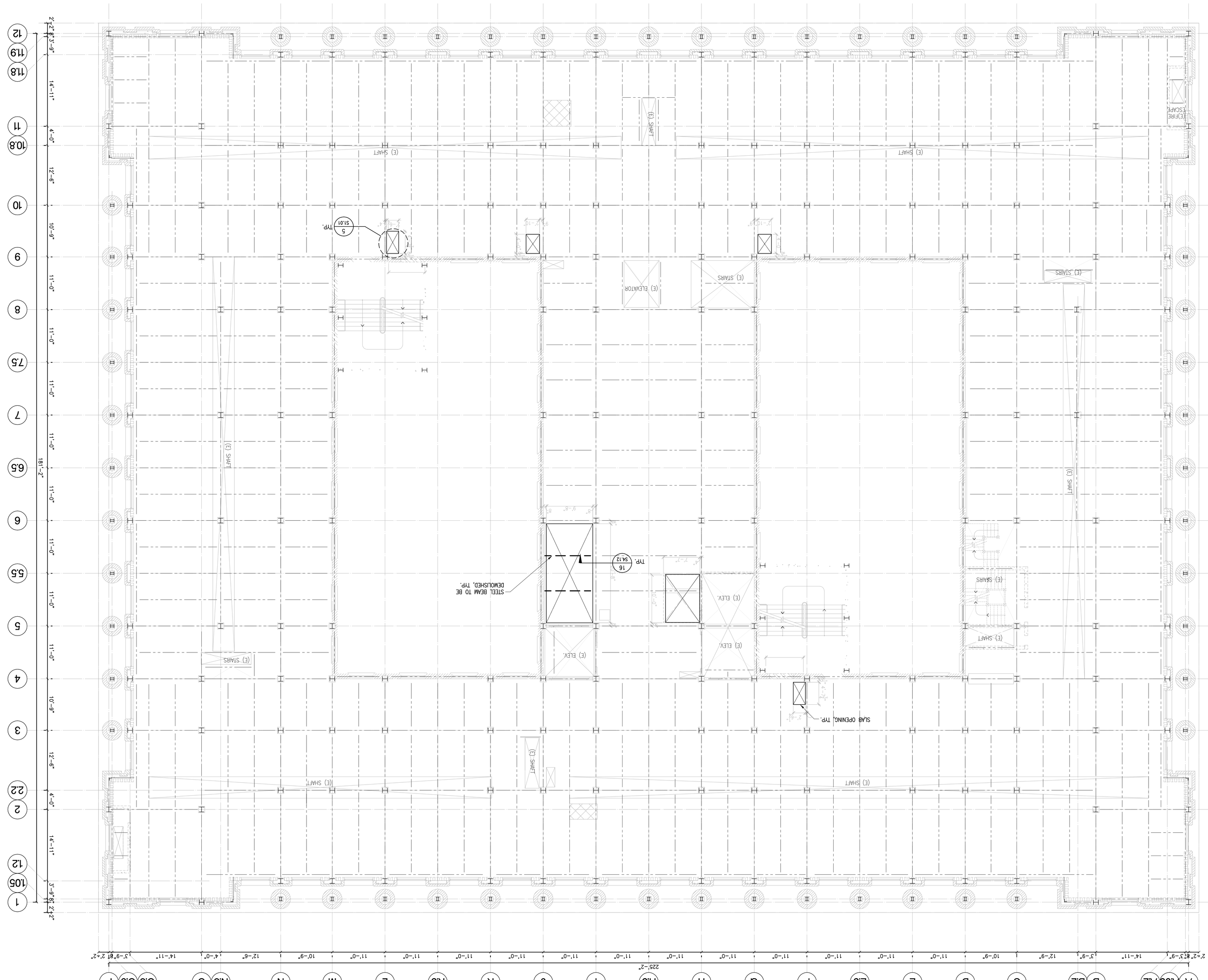

DEMOLITION NOTES / WALL MATERIALS LEGEND

1. VERIFY ALL EXISTING MATERIALS, DIMENSIONS, FLOOR ELEVATIONS, AND BUILDING CONDITIONS.
2. ALL STAIRS TO REMAIN EXCEPT AS INDICATED DASHED.
3. PROVIDE NEW OPENINGS IN EXISTING SLABS.
4. NOTES & SYMBOLS INDICATED APPLY TO THE GENERAL PROJECT. ALL NOTES DO NOT NECESSARILY APPLY TO ALL INDIVIDUAL SHEETS.
5. PROVIDE BARRIER IN ACCORDANCE WITH OSHA STANDARDS AT GRADE CHANGES & SLAB OPENINGS.
6. LEVEL CONCRETE SLAB FOR APPLICATION OF NEW ROOF IN ACCORDANCE WITH MANUFACTURE'S RECOMMENDATIONS.
7. REMOVE ALL MORTAR, METAL TIES, WOOD AND OTHER MATERIALS THAT PROJECTS BEYOND THE FACE OF THE URM AT HISTORIC STAIR AND LIGHTCOURT URM WALLS. SURFACE OF URM SHALL BE SMOOTH FOR INSTALLATION OF FIBER WRAP AND/OR STRONG BACKS.

- EXISTING STONE / TERRA-COTTA / MASONRY WITH OR WITHOUT STONE BASE TO REMAIN
- EXISTING CONCRETE WALL / COLUMN TO REMAIN
- EXISTING HOLLOW CLAY TILE PARTITION WITH STONE SURFACE TO REMAIN
- CONCRETE BLOCK WALL TO REMAIN
- PLASTER WITH OR WITHOUT MARBLE BASE AND/OR CERAMIC TILE ON HOLLOW CLAY TILE (HCT) FURRING OR PARTITION TO REMAIN.
- HOLLOW CLAY TILE PARTITION WITH PLASTER AND STONE BASE TO REMAIN
- HOLLOW CLAY TILE / UNREINFORCED MASONRY WITH NO FINISH TO REMAIN
- PLASTER / GYPSUM BOARD ON METAL STUD PARTITION OR FURRING TO REMAIN
- EXISTING OPENING IN FLOOR SLAB MAINTAIN BARRIER PER OSHA STANDARDS.
- CONCRETE WALL / TO BE DEMOLISHED
- CONCRETE BLOCK WALL TO BE DEMOLISHED
- PROVIDE NEW OPENING IN EXISTING FLOOR SLAB – PROVIDE BARRIER IN ACCORDANCE WITH OSHA STANDARDS.
- RAISED FLOOR / CONCRETE PAD TO BE DEMOLISHED TO MATCH EXISTING SURROUNDING FLOOR ELEVATION
- REMOVE PLYWOOD BOARDS FROM WINDOWS FOR INSTALLATION OF NEW WINDOW AND REHABILITATION OF EXISTING WINDOWS WHICH ARE TO REMAIN.

(D)S2.12

SHEET NO.

JOB NO :	nya.0512100
DATE :	
SCALE :	1/8"=1'-0"

DEMOLITION TWELFTH FLOOR PLAN

DRAWING TITLE

REVISIONS

CONSULTANT

NABIH YOUSSEF & ASSOCIATES
Structural Engineers
800 Wilshire Boulevard, Suite 200
Los Angeles, California 90017
TEL: (213) 362-0700
FAX: (213) 624-2010

REGISTERED PROFESSIONAL ENGINEER
No. 2026
Exp. 9/30/09
M.F. G. YOUSSEF
STRUCTURAL
STATE OF CALIFORNIA

NADEL Architects Inc.
1990 So. Bundy Dr.
Fourth Floor
Los Angeles, CA 90025
T. 310.826.2100
F. 310.826.0182
www.nadelarc.com

COUNTY OF LOS ANGELES
THE HALL OF JUSTICE
STRUCTURAL RETROFIT PHASE

SCOPING DOCUMENTS 100% SUBMISSION AUGUST 2010

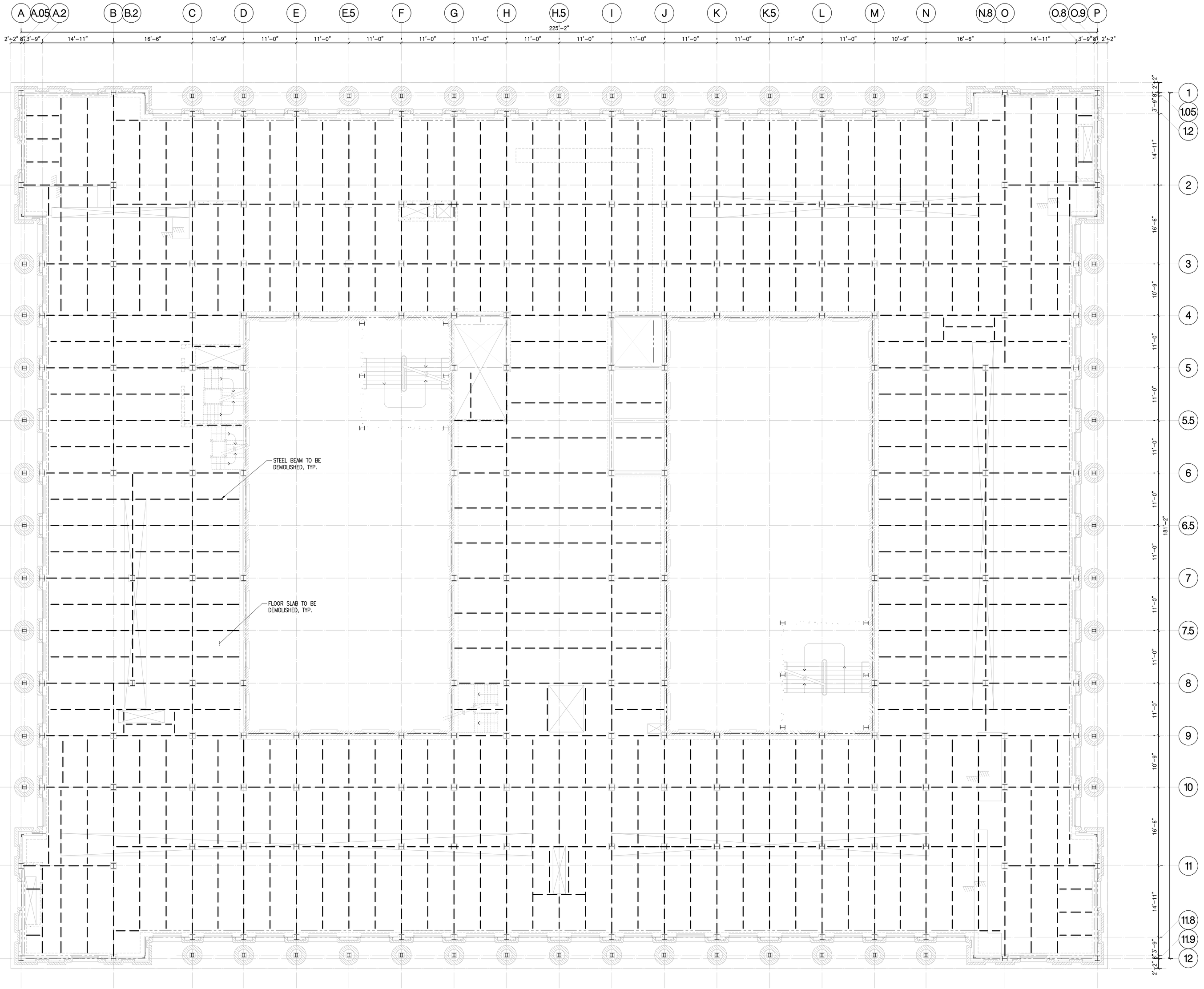

DEMOLITION NOTES / WALL MATERIALS LEGEND

1. VERIFY ALL EXISTING MATERIALS, DIMENSIONS, FLOOR ELEVATIONS, AND BUILDING CONDITIONS.
2. ALL STAIRS TO REMAIN EXCEPT AS INDICATED DASHED.
3. PROVIDE NEW OPENINGS IN EXISTING SLABS.
4. NOTES & SYMBOLS INDICATED APPLY TO THE GENERAL PROJECT. ALL NOTES DO NOT NECESSARILY APPLY TO ALL INDIVIDUAL SHEETS.
5. PROVIDE BARRIER IN ACCORDANCE WITH OSHA STANDARDS AT GRADE CHANGES & SLAB OPENINGS.
6. LEVEL CONCRETE SLAB FOR APPLICATION OF NEW ROOF IN ACCORDANCE WITH MANUFACTURE'S RECOMMENDATIONS.
7. REMOVE ALL MORTAR, METAL TIES, WOOD AND OTHER MATERIALS THAT PROJECTS BEYOND THE FACE OF THE URM AT HISTORIC STAIR AND LIGHTCOURT URM WALLS. SURFACE OF URM SHALL BE SMOOTH FOR INSTALLATION OF FIBER WRAP AND/OR STRONG BACKS.

- EXISTING STONE / TERRA-COTTA / MASONRY WITH OR WITHOUT STONE BASE TO REMAIN
- EXISTING CONCRETE WALL / COLUMN TO REMAIN
- EXISTING HOLLOW CLAY TILE PARTITION WITH STONE SURFACE TO REMAIN
- CONCRETE BLOCK WALL TO REMAIN
- PLASTER WITH OR WITHOUT MARBLE BASE AND/OR CERAMIC TILE ON HOLLOW CLAY TILE (HCT) FURRING OR PARTITION TO REMAIN.
- HOLLOW CLAY TILE PARTITION WITH PLASTER AND STONE BASE TO REMAIN
- HOLLOW CLAY TILE / UNREINFORCED MASONRY WITH NO FINISH TO REMAIN
- PLASTER / GYPSUM BOARD ON METAL STUD PARTITION OR FURRING TO REMAIN
- EXISTING OPENING IN FLOOR SLAB MAINTAIN BARRIER PER OSHA STANDARDS.
- CONCRETE WALL / TO BE DEMOLISHED
- CONCRETE BLOCK WALL TO BE DEMOLISHED
- PROVIDE NEW OPENING IN EXISTING FLOOR SLAB – PROVIDE BARRIER IN ACCORDANCE WITH OSHA STANDARDS.
- RAISED FLOOR / CONCRETE PAD TO BE DEMOLISHED TO MATCH EXISTING SURROUNDING FLOOR ELEVATION
- REMOVE PLYWOOD BOARDS FROM WINDOWS FOR INSTALLATION OF NEW WINDOW AND REHABILITATION OF EXISTING WINDOWS WHICH ARE TO REMAIN.

4' 8' 0" 2" 6" 16" N

DEMOLITION THIRTEENTH FLOOR PLAN | SCALE: 1/8"=1'-0" | 1

NADEL Architects Inc.
1990 So. Bundy Dr.
Fourth Floor
Los Angeles, CA 90025
T. 310.826.2100
F. 310.826.0182
www.nadelarc.com

CONSULTANT

NABIH YOUSSEF & ASSOCIATES
Structural Engineers
800 Wilshire Boulevard, Suite 200
Los Angeles, California 90017
TEL: (213) 362-0707
FAX: (213) 896-3018

REGISTERED PROFESSIONAL ENGINEER
NABIH F. G. YOUSSEF
No. 2026
Exp. 9/30/09
STRUCTURAL
STATE OF CALIFORNIA

COUNTY OF LOS ANGELES
THE HALL OF JUSTICE
STRUCTURAL RETROFIT PHASE

REVISIONS

1	
2	
3	
4	
5	
6	

DRAWING TITLE

DEMOLITION THIRTEENTH FLOOR PLAN

SCALE : 1/8"=1'-0"
DATE :
JOB NO : nya.05121.00
SHEET NO.
(D)S2.13

SCOPING DOCUMENTS 100% SUBMISSION AUGUST 2010

X:\2005\05121-Hall of Justice\S\5102-13.dwg LAST PLOTTED ON Tue 07/08/08 - 11:48am

ALL DRAWINGS AND WRITTEN MATERIAL APPEARING HEREIN CONSTITUTE THE ORIGINAL AND UNPUBLISHED WORK OF THE ARCHITECT AND THE SAME MAY NOT BE DUPLICATED, USED OR DISCLOSED WITHOUT THE WRITTEN CONSENT OF THE ARCHITECT. COPYRIGHT: NADEL ARCHITECTS INC. ALL RIGHTS RESERVED.

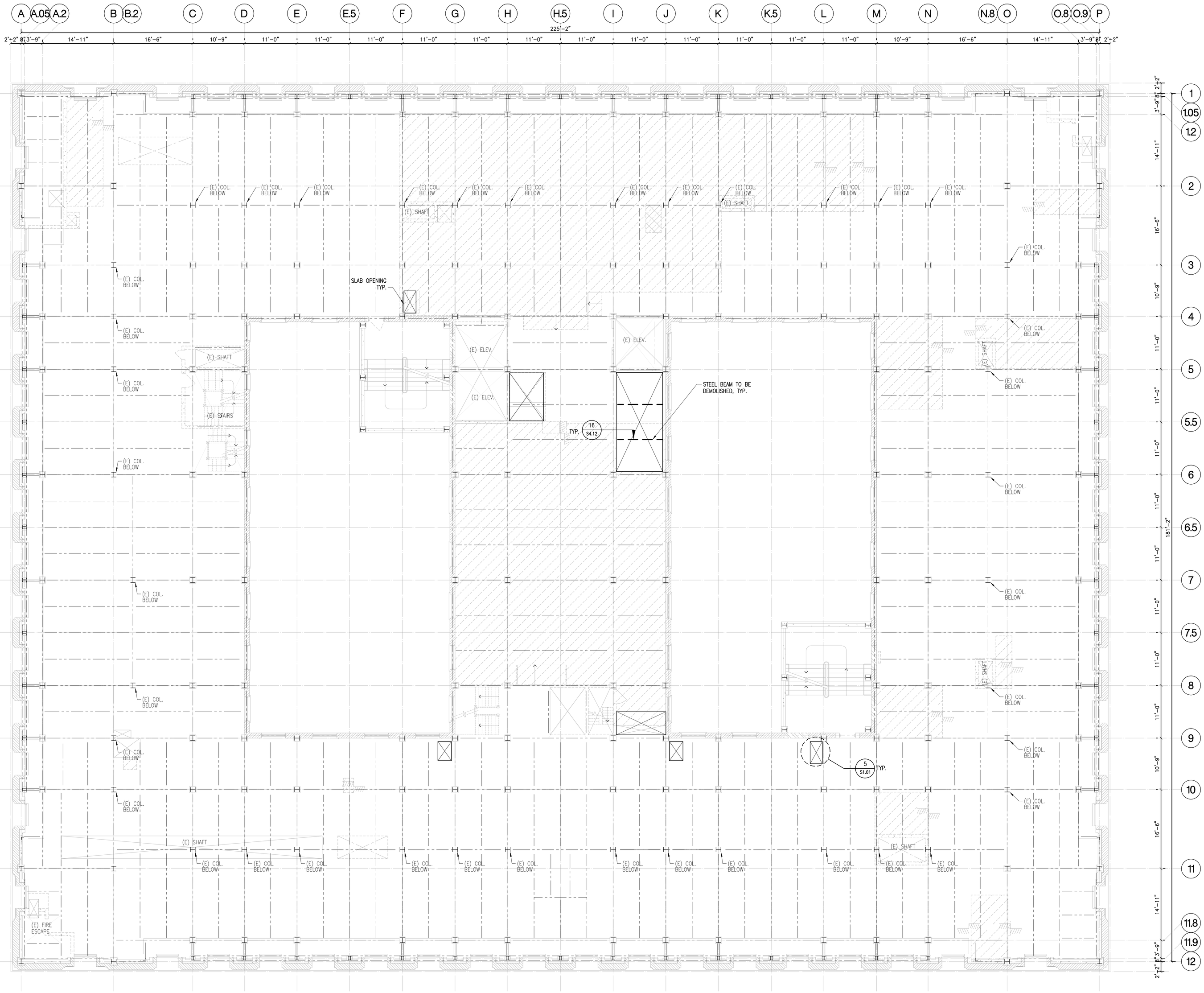

DEMOLITION NOTES / WALL MATERIALS LEGEND

1. VERIFY ALL EXISTING MATERIALS, DIMENSIONS, FLOOR ELEVATIONS, AND BUILDING CONDITIONS.
2. ALL STAIRS TO REMAIN EXCEPT AS INDICATED DASHED.
3. PROVIDE NEW OPENINGS IN EXISTING SLABS.
4. NOTES & SYMBOLS INDICATED APPLY TO THE GENERAL PROJECT. ALL NOTES DO NOT NECESSARILY APPLY TO ALL INDIVIDUAL SHEETS.
5. PROVIDE BARRIER IN ACCORDANCE WITH OSHA STANDARDS AT GRADE CHANGES & SLAB OPENINGS.
6. LEVEL CONCRETE SLAB FOR APPLICATION OF NEW ROOF IN ACCORDANCE WITH MANUFACTURE'S RECOMMENDATIONS.
7. REMOVE ALL MORTAR, METAL TIES, WOOD AND OTHER MATERIALS THAT PROJECTS BEYOND THE FACE OF THE URM AT HISTORIC STAIR AND LIGHTCOURT URM WALLS. SURFACE OF URM SHALL BE SMOOTH FOR INSTALLATION OF FIBER WRAP AND/OR STRONG BACKS.

- EXISTING STONE / TERRA-COTTA / MASONRY WITH OR WITHOUT STONE BASE TO REMAIN
- EXISTING CONCRETE WALL / COLUMN TO REMAIN
- EXISTING HOLLOW CLAY TILE PARTITION WITH STONE SURFACE TO REMAIN
- CONCRETE BLOCK WALL TO REMAIN
- PLASTER WITH OR WITHOUT MARBLE BASE AND/OR CERAMIC TILE ON HOLLOW CLAY TILE (HCT) FURRING OR PARTITION TO REMAIN.
- HOLLOW CLAY TILE PARTITION WITH PLASTER AND STONE BASE TO REMAIN
- HOLLOW CLAY TILE / UNREINFORCED MASONRY WITH NO FINISH TO REMAIN
- PLASTER / GYPSUM BOARD ON METAL STUD PARTITION OR FURRING TO REMAIN
- EXISTING OPENING IN FLOOR SLAB MAINTAIN BARRIER PER OSHA STANDARDS.
- CONCRETE WALL / TO BE DEMOLISHED
- CONCRETE BLOCK WALL TO BE DEMOLISHED
- PROVIDE NEW OPENING IN EXISTING FLOOR SLAB – PROVIDE BARRIER IN ACCORDANCE WITH OSHA STANDARDS.
- RAISED FLOOR / CONCRETE PAD TO BE DEMOLISHED TO MATCH EXISTING SURROUNDING FLOOR ELEVATION
- REMOVE PLYWOOD BOARDS FROM WINDOWS FOR INSTALLATION OF NEW WINDOW AND REHABILITATION OF EXISTING WINDOWS WHICH ARE TO REMAIN.

4' 8' 0' 2' 6' 16' N

DEMOLITION FOURTEENTH FLOOR PLAN | SCALE: 1/8"=1'-0" | 1

NADEL Architects Inc.

1990 So. Bundy Dr.
Fourth Floor
Los Angeles, CA 90025

T. 310.826.2100
F. 310.826.0182

www.nadelarc.com

CONSULTANT

NABIH YOUSSEF & ASSOCIATES
Structural Engineers
800 Wilshire Boulevard, Suite 200
Los Angeles, California 90017
TEL: (213) 362-0707
FAX: (213) 896-0018

REGISTERED PROFESSIONAL ENGINEER
NABIH F. G. YOUSSEF
No. 2026
Exp. 9/30/09
STRUCTURAL
STATE OF CALIFORNIA

COUNTY OF LOS ANGELES
THE HALL OF JUSTICE
STRUCTURAL RETROFIT PHASE

REVISIONS

1	
2	
3	
4	
5	
6	

DRAWING TITLE

DEMOLITION FOURTEENTH FLOOR PLAN

SCALE : 1/8"=1'-0"
DATE :
JOB NO : nya.05121.00
SHEET NO.

(D)S2.14

SCOPING DOCUMENTS 100% SUBMISSION AUGUST 2010

X:\2005\05121-Hall of Justice\S\S102-14.dwg LAST PLOTTED ON Tue 07/08/08 - 11:48am

ALL DRAWINGS AND WRITTEN MATERIAL APPEARING HEREIN CONSTITUTE THE ORIGINAL AND UNPUBLISHED WORK OF THE ARCHITECT AND THE SAME MAY NOT BE DUPLICATED, USED OR DISCLOSED WITHOUT THE WRITTEN CONSENT OF THE ARCHITECT. COPYRIGHT: NADEL ARCHITECTS INC. ALL RIGHTS RESERVED.

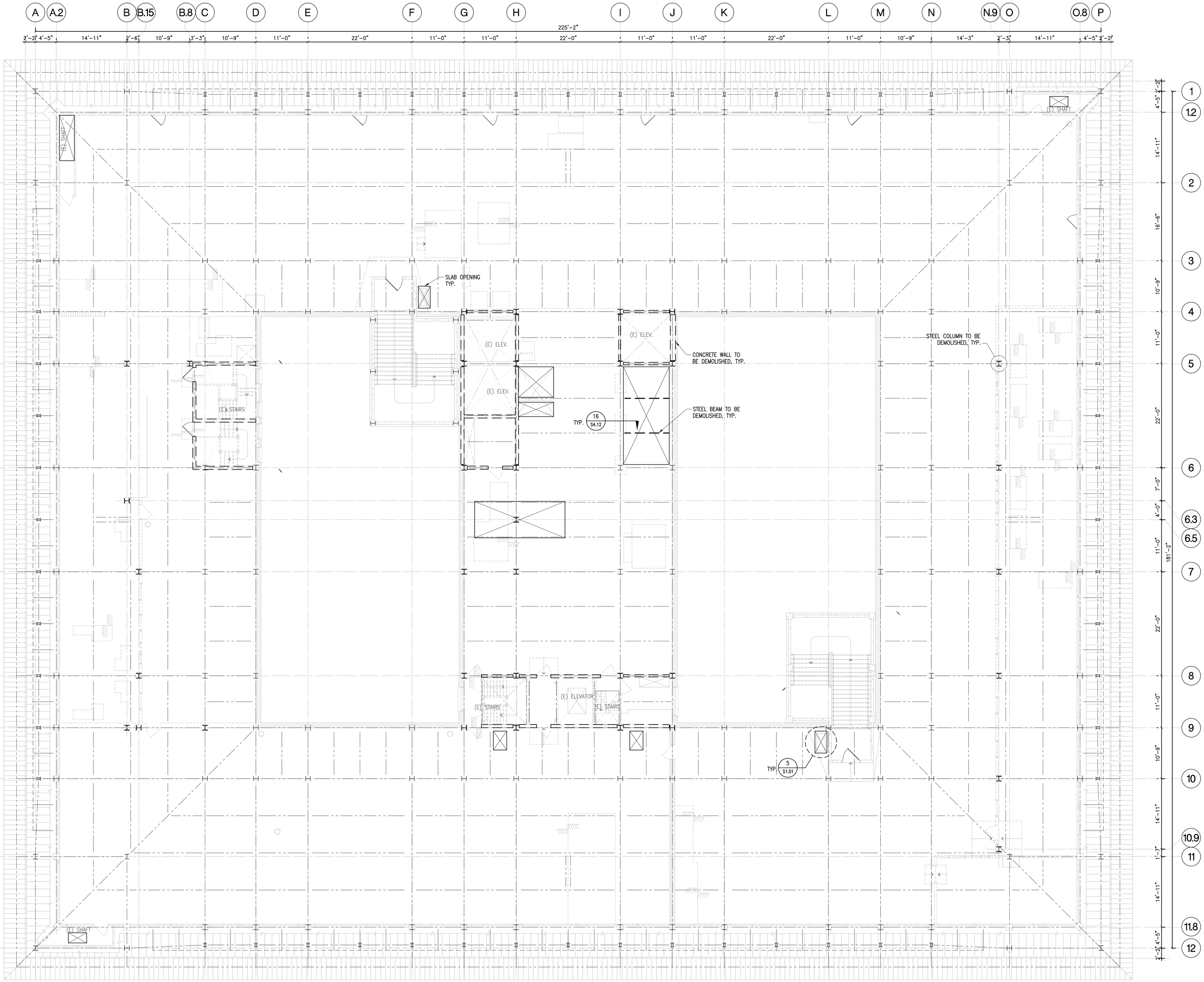

DEMOLITION NOTES / WALL MATERIALS LEGEND

1. VERIFY ALL EXISTING MATERIALS, DIMENSIONS, FLOOR ELEVATIONS, AND BUILDING CONDITIONS.
2. ALL STAIRS TO REMAIN EXCEPT AS INDICATED DASHED.
3. PROVIDE NEW OPENINGS IN EXISTING SLABS.
4. NOTES & SYMBOLS INDICATED APPLY TO THE GENERAL PROJECT. ALL NOTES DO NOT NECESSARILY APPLY TO ALL INDIVIDUAL SHEETS.
5. PROVIDE BARRIER IN ACCORDANCE WITH OSHA STANDARDS AT GRADE CHANGES & SLAB OPENINGS.
6. LEVEL CONCRETE SLAB FOR APPLICATION OF NEW ROOF IN ACCORDANCE WITH MANUFACTURE'S RECOMMENDATIONS.
7. REMOVE ALL MORTAR, METAL TIES, WOOD AND OTHER MATERIALS THAT PROJECTS BEYOND THE FACE OF THE URM AT HISTORIC STAIR AND LIGHTCOURT URM WALLS. SURFACE OF URM SHALL BE SMOOTH FOR INSTALLATION OF FIBER WRAP AND/OR STRONG BACKS.

- EXISTING STONE / TERRA-COTTA / MASONRY WITH OR WITHOUT STONE BASE TO REMAIN
- EXISTING CONCRETE WALL / COLUMN TO REMAIN
- EXISTING HOLLOW CLAY TILE PARTITION WITH STONE SURFACE TO REMAIN
- CONCRETE BLOCK WALL TO REMAIN
- PLASTER WITH OR WITHOUT MARBLE BASE AND/OR CERAMIC TILE ON HOLLOW CLAY TILE (HCT) FURRING OR PARTITION TO REMAIN.
- HOLLOW CLAY TILE PARTITION WITH PLASTER AND STONE BASE TO REMAIN
- HOLLOW CLAY TILE / UNREINFORCED MASONRY WITH NO FINISH TO REMAIN
- PLASTER / GYPSUM BOARD ON METAL STUD PARTITION OR FURRING TO REMAIN
- EXISTING OPENING IN FLOOR SLAB MAINTAIN BARRIER PER OSHA STANDARDS.
- CONCRETE WALL / TO BE DEMOLISHED
- CONCRETE BLOCK WALL TO BE DEMOLISHED
- PROVIDE NEW OPENING IN EXISTING FLOOR SLAB – PROVIDE BARRIER IN ACCORDANCE WITH OSHA STANDARDS.
- RAISED FLOOR / CONCRETE PAD TO BE DEMOLISHED TO MATCH EXISTING SURROUNDING FLOOR ELEVATION
- REMOVE PLYWOOD BOARDS FROM WINDOWS FOR INSTALLATION OF NEW WINDOW AND REHABILITATION OF EXISTING WINDOWS WHICH ARE TO REMAIN.

DEMOLITION PENTHOUSE FLOOR PLAN | SCALE: 1/8"=1'-0" | 1

NADEL Architects Inc.

1990 So. Bundy Dr.
Fourth Floor
Los Angeles, CA 90025

T. 310.826.2100
F. 310.826.0182

www.nadelarc.com

CONSULTANT

NABIH YOUSSEF & ASSOCIATES
Structural Engineers
800 Wilshire Boulevard, Suite 200
Los Angeles, California 90017
TEL: (213) 362-0707
FAX: (213) 896-0018

REGISTERED PROFESSIONAL ENGINEER
NABIH F. G. YOUSSEF
No. 2026
Exp. 9/30/09
STRUCTURAL
STATE OF CALIFORNIA

COUNTY OF LOS ANGELES
THE HALL OF JUSTICE
STRUCTURAL RETROFIT PHASE

REVISIONS

1	
2	
3	
4	
5	
6	

DRAWING TITLE

DEMOLITION PENTHOUSE FLOOR PLAN

AUGUST 2010
100% SUBMISSION
SCOPING DOCUMENTS

SCALE : 1/8"=1'-0"
DATE :
JOB NO : nya.05121.00
SHEET NO.

(D)S2.15

K:\2005\05121-Hall of Justice\S\S102-15.dwg LAST PLOTTED ON Tue 07/08/08 - 11:48am

ALL DRAWINGS AND WRITTEN MATERIAL APPEARING HEREIN CONSTITUTE THE ORIGINAL AND UNPUBLISHED WORK OF THE ARCHITECT AND THE SAME MAY NOT BE DUPLICATED, USED OR DISCLOSED WITHOUT THE WRITTEN CONSENT OF THE ARCHITECT. COPYRIGHT: NADEL ARCHITECTS INC. ALL RIGHTS RESERVED.

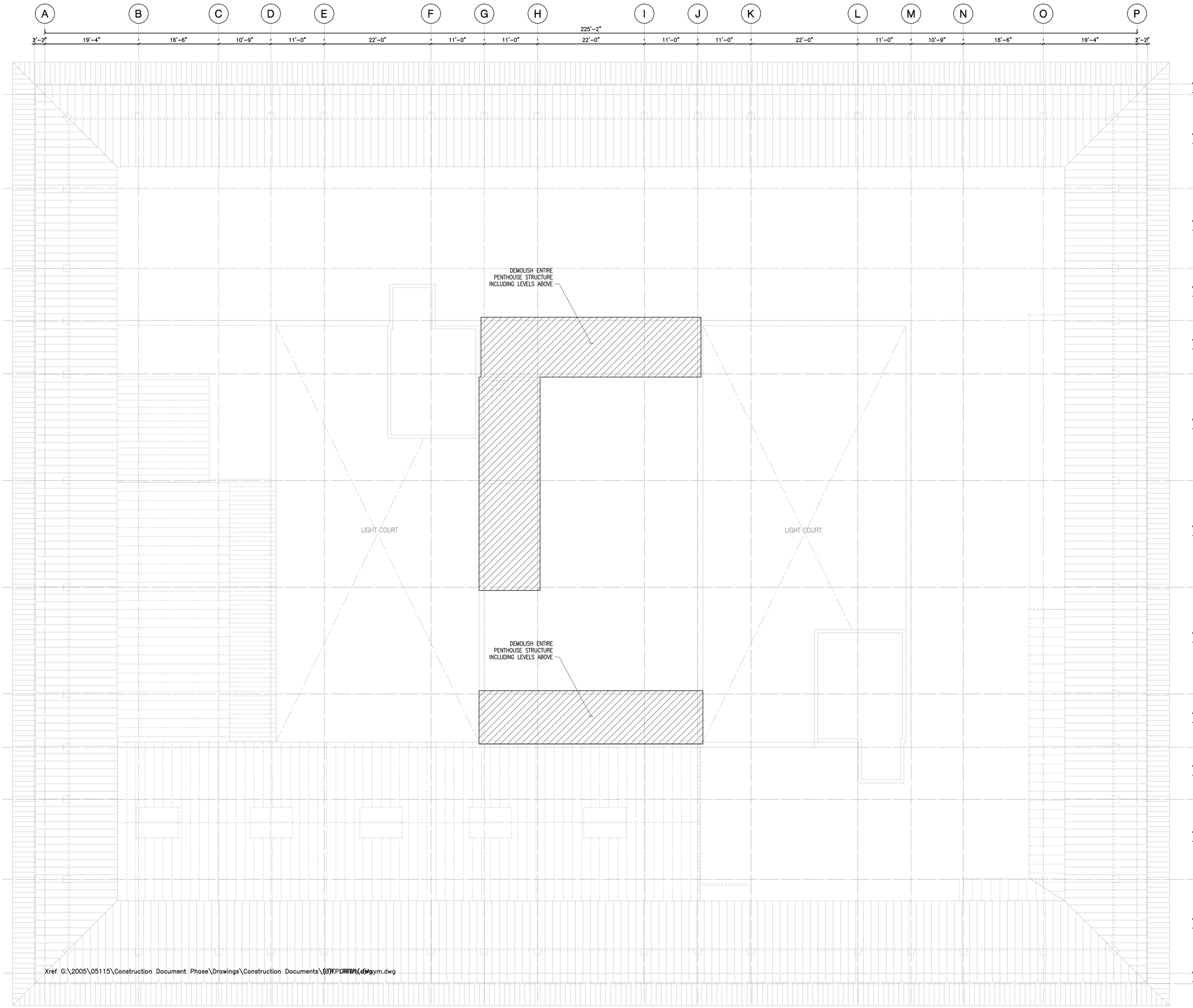

Xref G:\2005\05115\Construction Document Phase\Drawings\Construction Documents\(D)FP1RTM(dwg

(D)S2.16sym.dwg

NOTES:

1. FOR GENERAL NOTES AND TYPICAL DETAILS, SEE SHEETS S1.00 THRU S1.03
2. SEE ARCH. DWGS FOR EDGE OF SLAB DIMENSIONS.
3. VERIFY ALL DIMENSIONS, ELEVATIONS, FLOOR OPENINGS, SLAB DEPRESSIONS, CURBS, ETC. WITH ARCHITECTURAL AND MEP DRAWINGS.
4. NO BEAM PENETRATION IS ALLOWED UNLESS SPECIFICALLY SHOWN ON THE STRUCTURAL DRAWINGS.
5. BEAMS SHALL BE EVENLY SPACED WITHIN A BAY, U.N.O.
6. ALL STEEL MEMBERS WITH METAL DECK AND CONCRETE FILL SHALL HAVE A MINIMUM OF ONE 3/4"ø SHEAR STUD AT 12" O.C. U.N.O.
7. TOP OF STEEL ELEVATION SHALL BE SET BASED ON TOP OF STRUCTURAL CONCRETE ELEVATION, CONCRETE FILL THICKNESS AND DEPTH OF METAL DECKING, U.N.O. SEE ARCHITECTURAL DRAWINGS FOR ROOF SLOPES.
8. HOT DIP GALVANIZE ALL STEEL PERMANENTLY EXPOSED TO WEATHER.
9. CONTRACTOR TO COORDINATE PRECISE ROOF FRAMING AT MECHANICAL EQUIPMENT WITH EQUIPMENT DATA SHEETS.

SYMBOLS AND NOTATIONS

- INDICATES CANTILEVER MOMENT CONNECTION, SEE 9, 10/S1.02
- INDICATES DRAG CONNECTION SEE 14/S1.02
- INDICATES CHANGE IN ELEVATION
- D1 — INDICATES STEEL DECK TYPE. SEE SCHEDULE 10/S1.03
- INDICATES STEEL DECK DIRECTION
- ( ) INDICATES NUMBER OF 3/4"ø SHEAR STUDS EQUALLY SPACED IN SPAN / ZONE. ALLOW FOR A MINIMUM OF 1 STUD PER FOOT FOR ALL BEAMS WHERE NOT NOTED, SEE 1/S1.03
- INDICATES ANGLE BRACE, SEE 11/S1.02
- LOWER END OF BRACE
- AREAS OF DEMOLISHED STRUCTURE

0" 2" 4" 8" 16"

N

DEMOLITION ROOF PLAN — SCALE: 1/8"=1'-0" — 1

NADEL Architects Inc.

1990 So. Bundy Dr.
Fourth Floor
Los Angeles, CA 90025

T. 310.826.2100
F. 310.826.0182

www.nadelarc.com

CONSULTANT

NABIH YOUSSEF & ASSOCIATES
Structural Engineers
800 Wilshire Boulevard, Suite 200
Los Angeles, California 90017
TEL: (213) 362-0707
FAX: (213) 896-3018

REGISTERED PROFESSIONAL ENGINEER
NABIH F. G. YOUSSEF
No. 2026
Exp. 9/30/09
STRUCTURAL
STATE OF CALIFORNIA

COUNTY OF LOS ANGELES

THE HALL OF JUSTICE

STRUCTURAL RETROFIT PHASE

REVISIONS

1	
2	
3	
4	
5	
6	

DRAWING TITLE

DEMOLITION ROOF PLAN

SCALE : 1/8"=1'-0"
DATE :
JOB NO : nya.05121.00
SHEET NO.

(D)S2.16

SCOPING DOCUMENTS — 100% SUBMISSION — AUGUST 2010

K:\2005\05121-Hall of Justice\S\S102-16.dwg LAST PLOTTED ON Tue 07/08/08 – 11:49am

ALL DRAWINGS AND WRITTEN MATERIAL APPEARING HEREIN CONSTITUTE THE ORIGINAL AND UNPUBLISHED WORK OF THE ARCHITECT AND THE SAME MAY NOT BE DUPLICATED, USED OR DISCLOSED WITHOUT THE WRITTEN CONSENT OF THE ARCHITECT. COPYRIGHT: NADEL ARCHITECTS INC. ALL RIGHTS RESERVED.

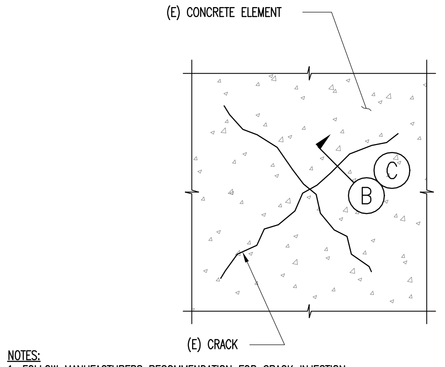

NOTES:
1. FOLLOW MANUFACTURERS RECOMMENDATION FOR CRACK INJECTION.
2. CONTACT SEOR IF CRACK STEP IS GREATER THAN 1/16". CONTACT A GEOTECHNICAL ENGINEER AS REQUIRED FOR SLAB ON GRADE OFFSET TO VERIFY IF SOIL REMEDIATION IS REQUIRED.

A PLAN

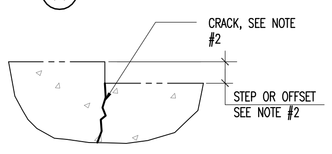

B EXISTING CONDITION

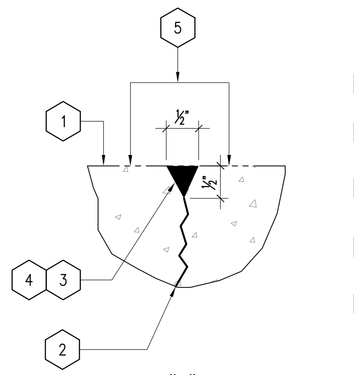

1. (E) CONCRETE ELEMENT
2. (E) RANDOM CRACK, SEE CRACK REPAIR SCHEDULE FOR REPAIR METHOD
3. "V" ROUT CRACKS WHERE REQUIRED PRIOR TO REPAIR DO NOT DAMAGE (E) REINF.
4. EPOXY FILL OR PROVIDE NEW SEALANT PER SCHEDULE
5. GRIND SURFACES FLUSH AS REQUIRED

C "V" ROUTING DETAIL

TYPICAL CRACK REPAIR DETAIL
SCALE: NTS — 12 / S1.01

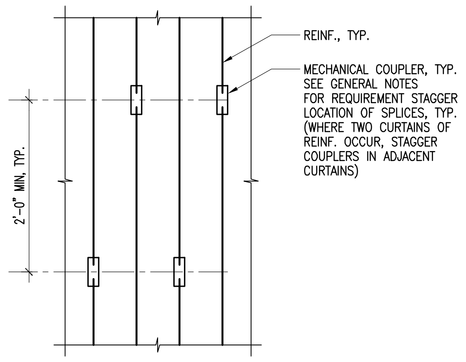

TYPICAL MECHANICAL COUPLER INSTALLATION DETAIL
SCALE: 1"=1'-0" — 9 / S1.01

CURB REINFORCING SCHEDULE		
MAX. "H"	VERTICAL	HORIZ.
8"	#3 @ 18"	
18"	#4 @ 18"	
4'-0"	#4 @ 12"	#4 @ 12"

REINF. TO BE PLACED IN CURB WALL ℄

NOTE:
1. SEE ARCH'L DWGS FOR CURB LOCATION & SIZE

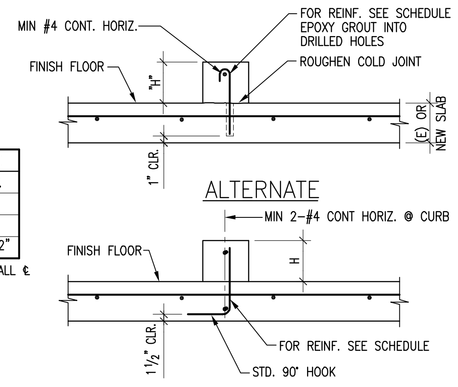

TYP. CONCRETE CURB DETAIL
SCALE: NTS — 10 / S1.01

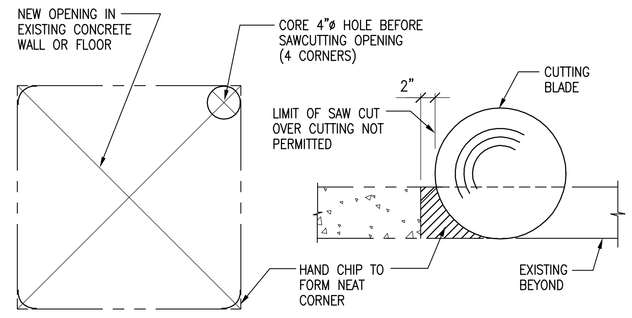

ELEVATION/PLAN SECTION

TYP. SAWCUT DETAIL
SCALE: NTS — 5 / S1.01

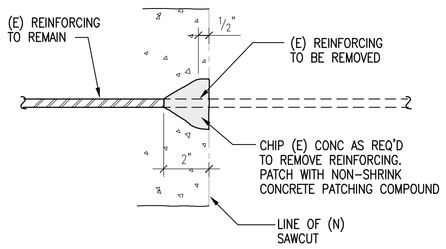

TYP. BAR TERMINATION DETAIL
SCALE: NTS — 6 / S1.01

TENSION LAP SPLICE LENGTH									DEVELOPMENT LENGTH (ld)							
	3000 PSI CONC f'c		4000 PSI CONC f'c		6000 PSI CONC f'c		8000 PSI CONC f'c		3000 PSI CONC f'c		4000 PSI CONC f'c		6000 PSI CONC f'c		8000 PSI CONC f'c	
BAR SIZE	TOP	OTHER	TOP	OTHER	TOP	OTHER	TOP	OTHER	TOP	OTHER	TOP	OTHER	TOP	OTHER	TOP	OTHER
#3	28	22	24	19	20	16	19	16	22	17	19	15	16	12	14	12
#4	37	29	32	25	27	21	24	19	29	22	25	19	21	16	18	14
#5	47	36	40	31	33	26	29	23	36	28	31	24	26	20	22	17
#6	56	43	48	37	40	31	36	28	43	33	37	29	31	24	27	21
#7	81	63	70	54	58	45	51	39	63	48	54	42	45	34	39	30
#8	93	72	80	62	66	51	58	45	72	55	62	48	51	39	44	34
#9	105	81	91	70	74	57	65	50	81	62	70	54	57	44	50	38
#10	118	91	102	79	82	63	73	56	91	70	79	61	63	49	56	43
#11	131	101	113	87	90	70	81	63	101	78	87	67	70	54	62	48

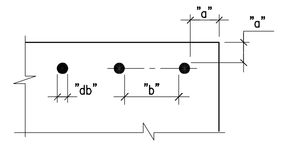

WHERE: "a" IS THE CLEAR COVER
"b" IS THE CLEAR SPACING
"db" IS THE BAR DIA.

NOTES:
1. ALL SPLICES SHALL BE TENSION LAP SPLICES U.N.O.
2. LENGTHS SHOWN ARE FOR GRADE 60 UNCOATED BARS.
3. LENGTHS SHOWN ARE IN INCHES.
4. INCREASE LENGTHS 30% FOR LIGHT WEIGHT CONCRETE AND AT FOUR BAR BUNDLES (WHERE 2 BARS LAP WITH 2 OTHER BARS) INDIVIDUAL BARS WITHIN A BUNDLE SHALL NOT OVERLAP.
5. TOP BARS = HORIZONTAL BARS PLACED WITH MORE THAN 12" OF FRESH CONCRETE CAST BELOW THEM .
6. INCREASE LENGTHS 50% WHERE a < db OR WHERE b < db FOR BEAMS AND COLUMNS OR WHERE b < 2db FOR OTHER ELEMENTS.
7. FOR #14 AND #18 BARS, USE MECHANICAL SPLICE IN ACCORDANCE WITH UBC REQUIREMENTS.

TENSION LAP SPLICE SCHEDULE
SCALE: NTS — 1 / S1.01

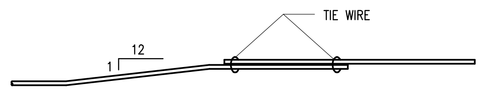

OFFSET & SPLICES

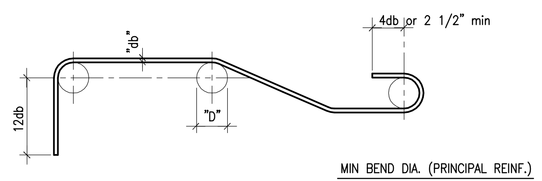

MIN BEND DIA. (PRINCIPAL REINF.)
D = 6db FOR #3 THRU #8
D = 8db FOR #9 THRU #11
D = 10db FOR #14 & #18

STANDARD HOOK DETAILS FOR PRINCIPAL REINFORCEMENT

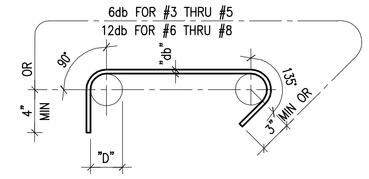

MIN. BEND DIA. (STIRRUPS & TIES)	
BAR	D
#3	1 1/2"
#4	2"
#5	2 1/2"
#6	4 1/2"

STANDARD HOOK DETAILS FOR STIRRUPS & TIES

TYPICAL REINFORCEMENT DETAILS
SCALE: NTS — 2 / S1.01

TOLERANCE CRACK WIDTHS FOR DURABILITY (ACI 224R)		
EXPOSURE CONDITION	MAXIMUM ACCEPTABLE CRACK WIDTH, IN.	VARIABLE, NOTE #1
DRY AIR OR PROTECTIVE MEMBRANE	0.016	–
HUMIDITY, MOIST AIR, SOIL	0.012	A, B
DEICING CHEMICALS	0.007	–
SEAWATER AND SEAWATER SPRAY; WETTING AND DRYING	0.006	–
WATER RETAINING STRUCTURES EXCLUDING NONPRESSURE PIPES	0.004	–

NOTES:
1. VARIABLE LETTERS TO BE ADJUSTED BY SEOR BASED ON ELEMENT AND EXPOSURE CONDITIONS.

CRACK REPAIR SCHEDULE (SEE NOTES)								
CRACK WIDTH RANGE ("W") BY ELEMENT TYPE		TYPE OF REPAIR	RECOMMENDED PRODUCT	PAY UNIT SEE NOTE #2	CRACK SURVEY REQUIRED SEE NOTE #2	V-ROUT REQ'D	QA OF REPAIR	NOTES
S.O.G.	SLAB/BEAM/COLUMN							
–	W<0.005	NONE	NONE	NONE	NONE	NO	–	–
W<A	0.005" ≤ W < B	SEAL FOR AESTHETIC	SIKADUR 55 SLV OR BASF CONCRESIVE STANDARD LVI GRAVITY FEED	PAY UNIT PER LIN. FT.	AS REQUIRED BY OWNER	NO	–	MAXIMUM ACCEPTABLE CRACK WIDTH LIMIT, PER SCHEDULE
A ≤ W< 0.035"	B ≤ W <0.035"	SEAL FOR DURABILITY	SIKADUR 55 SLV OR BASF CONCRESIVE STANDARD LVI GRAVITY FEED	PAY UNIT PER LIN. FT.	AS REQUIRED BY OWNER	NO	NDT METHOD	MAXIMUM ACCEPTABLE CRACK WIDTH LIMIT OF 0.035" IS FOR PROPER AGGREGATE INTERLOCK
0.035" ≤ W ≤0.25	0.035" ≤ W ≤ 0.0625"	STRUCTURAL REPAIR	OPTION #1: SIKADUR 55 SLV OR BASF CONCRESIVE STANDARD LVI GRAVITY FEED OPTION #2: SIKADUR 35 CRACK INJECTION	PAY UNIT PER LIN. FT.	GENERAL SURVEY REQUIRED AS DIRECTED BY OWNER & SEOR	YES	NDT METHOD	–
W > 0.25"	W > 0.0625"	STRUCTURAL REPAIR	CONTACT SEOR FOR DIRECTION	N/A	DETAILED SURVEY REQ'D	N/A	N/A	–

NOTES:
1. CRACK WIDTH RANGES AND REPAIR PRODUCTS ARE BASED ON ASSUMED EXPOSURE AND LOADING CONDITIONS. CONTACT SEOR IF CONDITIONS ARE DIFFERENT OR A DIFFERENT PERFORMANCE IS REQUIRED.
2. COORDINATE WITH OWNER THE EXTENT OF CRACK REPAIR REQUIRED BASED ON A CRACK SURVEY. PROVIDE OWNER W/ A COST ESTIMATE PRIOR TO COMMENCING WORK ON THE AREA SPECIFIED. DETERMINE IF SURVEY IS A VISUAL SURVEY OR OTHER NDT SURVEY.

TYPICAL CRACK REPAIR SCHEDULE
SCALE: NTS — 11 / S1.01

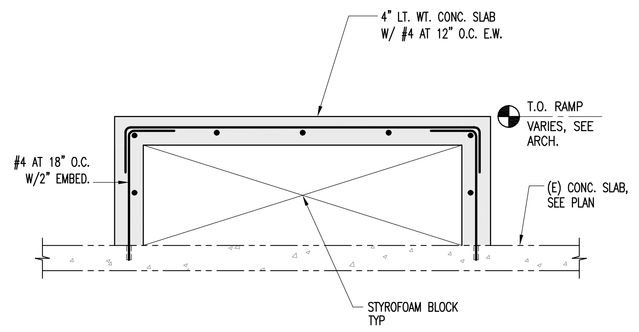

LOAD CAPACITY REQUIREMENT FOR STYROFOAM INFILL:
DEAD LOAD = 50 PSF
LIVE LOAD = 100 PSF

NOTE: PROVIDE INTERMEDIATE WALLS, WHERE SHOWN ON THE PLAN.

SECTION
SCALE: NTS — 7 / S1.01

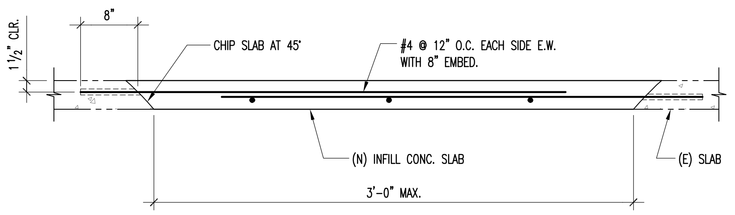

(E) OPENING INFILL DETAIL
SCALE: NTS — 8 / S1.01

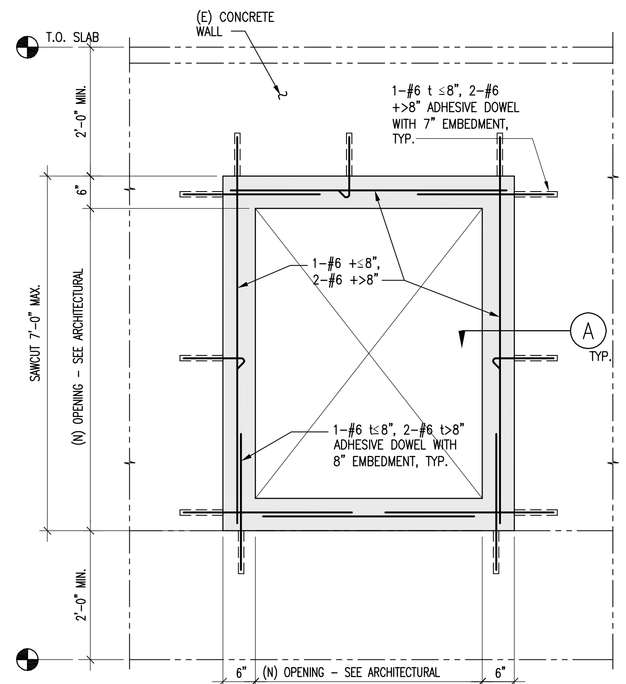

NOTES:
1. SAWCUT OPENING PER 5 / –
2. FOR OPENINGS LESS THAN 2'-0" IN HEIGHT AND WIDTH DETAIL NOT REQUIRED; EXPOSED REINF. TO BE PATCH PER 6 / –

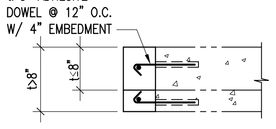

TYP. JAMB & HEAD DETAIL A

TYP. ELEVATION OF (N) OPENING IN (E) CONCRETE WALL
SCALE: NTS — 4 / S1.01

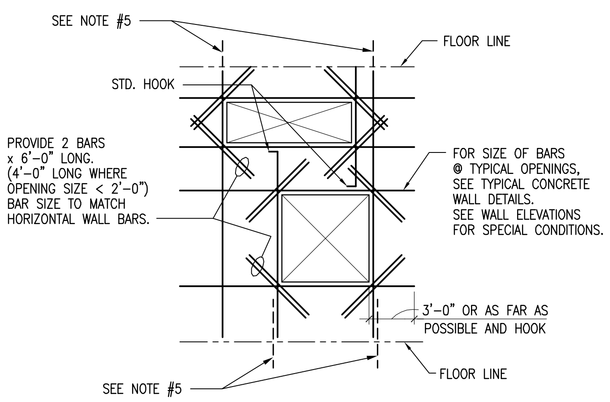

NOTES:
1. WHERE ONE OPENING OCCURS ABOVE ANOTHER, EXTEND ALL SILL AND LINTEL REINF. 3'-0" BEYOND FURTHEST OPENING IN EACH DIRECTION.
2. WHERE OPENINGS IN A HORIZONTAL LINE ARE SPACED LESS THAN THE WIDTH OF THE MAX. ADJACENT OPENING APART, RUN LINTEL AND SILL REINF. CONTINUOUS BETWEEN OPENINGS.
3. EXTEND VERTICAL BARS FROM FLOOR TO FLOOR OR (WHERE OPENING INTERSECTS BAR) FROM FLOOR TO OPENING.
4. TYPICAL WALL REINF. AT TYPICAL SPACING BETWEEN SPECIAL BARS IS TO BE USED. SEE TYPICAL WALL REINF. DETAILS AND WALL SECTIONS.
5. EXTEND VERTICAL BARS 3'-0" PAST FLOOR JOINT OR PROVIDE EQUIVALENT DOWELS.
6. OPENING REINFORCING NOT REQUIRED WHERE OPENING SIZE IS LESS THAN 9"ø AND SPACED MORE THAN 2'-0" AWAY FROM ADJACENT OPENINGS.

TYPICAL REINFORCING AROUND CONCRETE WALL OPENINGS
SCALE: NTS — 3 / S1.01

NADEL Architects Inc.
1990 So. Bundy Dr.
Fourth Floor
Los Angeles, CA 90025
T. 310.826.2100
F. 310.826.0182
www.nadelarc.com

CONSULTANT

NABIH YOUSSEF & ASSOCIATES
Structural Engineers
800 Wilshire Boulevard, Suite 200
Los Angeles, California 90017
TEL: (213) 362-0707
FAX: (213) 896-3018
REGISTERED PROFESSIONAL ENGINEER NABIH F. G. YOUSSEF No. 2026 Exp. 9/30/09 STRUCTURAL STATE OF CALIFORNIA

COUNTY OF LOS ANGELES
THE HALL OF JUSTICE
STRUCTURAL RETROFIT PHASE

REVISIONS

1	
2	
3	
4	
5	
6	

DRAWING TITLE

TYPICAL DETAILS

SCOPING DOCUMENTS 100% SUBMISSION AUGUST 2010

SCALE :
DATE :
JOB NO : nya.05121.00
SHEET NO.
S1.01

K:\2005\05121-Hall of Justice\S\S1-01.dwg LAST PLOTTED ON Tue 07/08/08 - 11:47am

ALL DRAWINGS AND WRITTEN MATERIAL APPEARING HEREIN CONSTITUTE THE ORIGINAL AND UNPUBLISHED WORK OF THE ARCHITECT AND THE SAME MAY NOT BE DUPLICATED, USED OR DISCLOSED WITHOUT THE WRITTEN CONSENT OF THE ARCHITECT. COPYRIGHT: NADEL ARCHITECTS INC. ALL RIGHTS RESERVED.

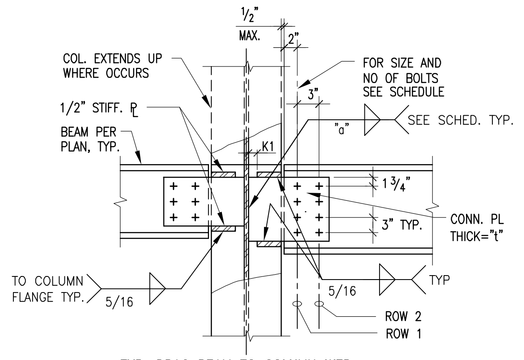

TYP. DRAG BEAM TO COLUMN WEB

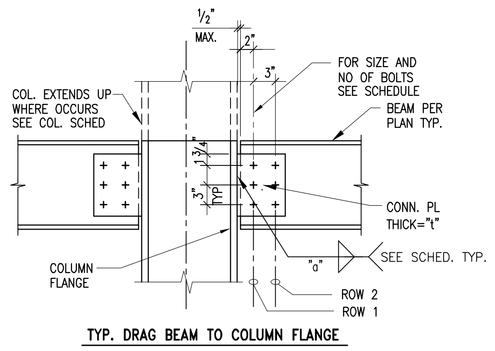

TYP. DRAG BEAM TO COLUMN FLANGE

STEEL TO STEEL DRAG BEAM CONNECTION SCHEDULE					
BEAM SIZE	LOCATION	NUMBER OF 7/8"ø A325-SC BOLTS		CONNECTION PLATE A572 Gr50	
		ROW 1	ROW 2	PLATE THICK "t"	WELD "a"
W10x	TYP., U.N.O.	2	2	1/2"	3/8"
W12x, W14x	TYP., U.N.O.	3	3	1/2"	3/8"
W16x, W18x	TYP., U.N.O.	4	4	5/8"	1/2"
W21x	TYP., U.N.O.	5	5	5/8"	1/2"
W24x	TYP., U.N.O.	6	6	5/8"	1/2"
W27x	TYP., U.N.O.	7	7	5/8"	1/2"

1. ALL FILLET WELD SIZES SHOWN ARE MIN. WELD SIZE. WHERE WELD SIZE SHOWN ARE SMALLER THAN AWS MIN. WELD SIZE, AWS MIN WELD SIZE SHALL BE USED.
2. PROVIDE BOLTS WITH THREADS EXCLUDED FROM THE SHEAR PLANE.
3. CENTER BOLTS ON BEAM CENTERLINE.

DRAG BEAM CONNECTION DETAILS AND SCHEDULE
SCALE: NONE — 14 / S1.02

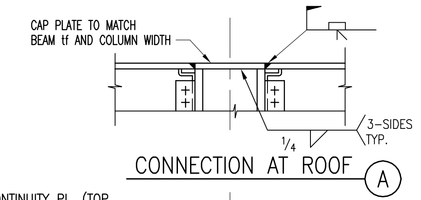

CONNECTION AT ROOF — A

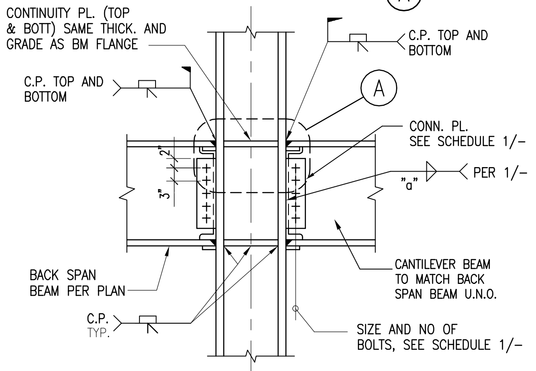

TYP. CANTILEVER MOMENT CONN.
SCALE: NONE — 10 / S1.02

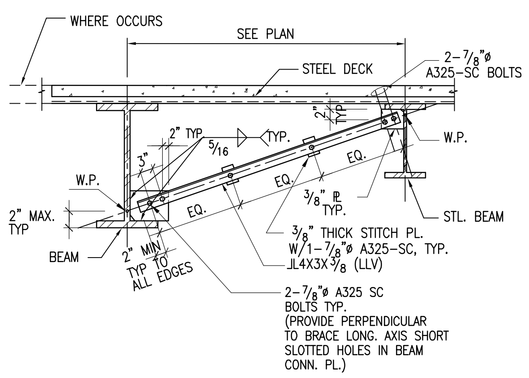

TYP. BM. BOTT. FLANGE BRACE
SCALE: NONE — 11 / S1.02

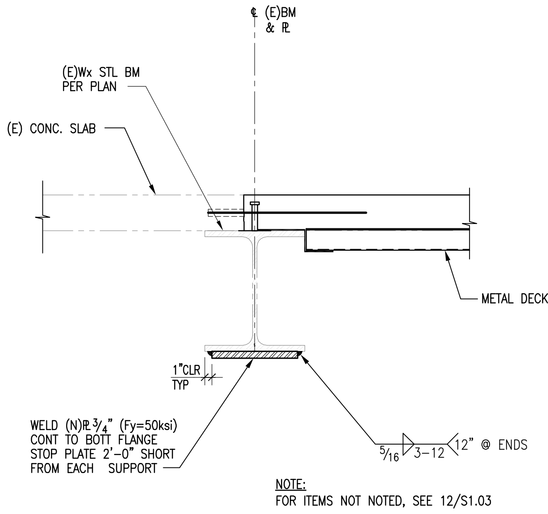

NOTE: FOR ITEMS NOT NOTED, SEE 12/S1.03

STRENGTHENING DETAIL
SCALE: NTS — 6 / S1.02

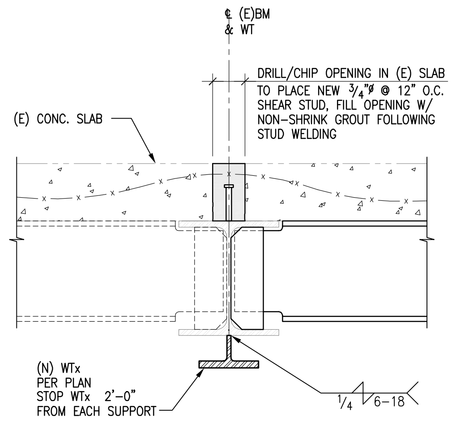

STRENGTHENING DETAIL
SCALE: NTS — 7 / S1.02

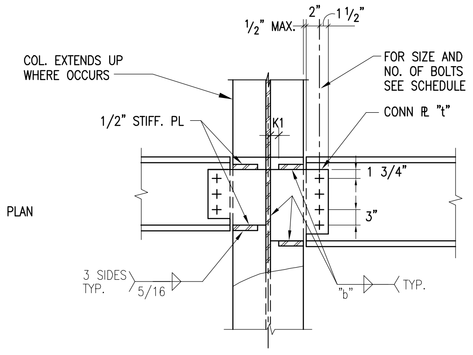

BEAM TO COL WEB CONNECTION

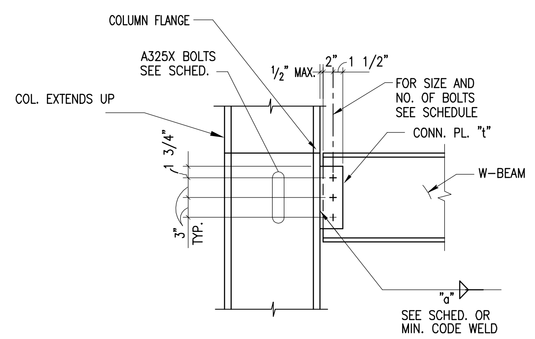

BEAM TO COLUMN FLANGE CONNECTION

BEAM CONNECTION SCHEDULE					
BEAM/GIRDER SIZE SEE NOTE 2.	NUMBER & SIZE OF A325X BOLTS U.N.O.		CONNECTION PLATE A-36 U.N.O.		
	ROW 1	ROW 2	PLATE THK. "t"	WELD "a"	WELD "b"
W8x, W10x	2-7/8"ø	——	1/2"	1/4"	1/4"
W12x, W14x,	3-7/8"ø	——	1/2"	1/4"	1/4"
W16, W18x	4-7/8"ø	——	1/2"	1/4"	1/4"
W21x	5-7/8"ø	——	1/2"	1/4"	5/16"
W24x	6-7/8"ø	——	1/2"	1/4"	5/16"
W27x	7-7/8"ø	——	5/8"	5/16"	5/16"
W30x	7-7/8"ø	——	5/8"	5/16"	5/16"

NOTE:
1. ALL FILLET WELD SIZES SHOWN ARE MINIMUM WELD SIZE. WHERE WELD SIZE SHOWN ARE SMALLER THAN AWS MINIMUM WELD SIZE, AWS MINIMUM WELD SIZE SHALL BE USED.
2. WHERE BEAM FRAMES INTO SHALLOWER GIRDER, CONNECTION SHALL BE BASED GIRDER SIZE.

TYPICAL NON-MOMENT BEAM CONNECTION SCHEDULE AND DETAILS
SCALE: NTS — 1 / S1.02

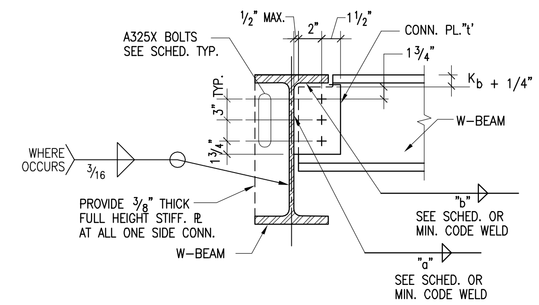

BEAM TO BEAM CONNECTION

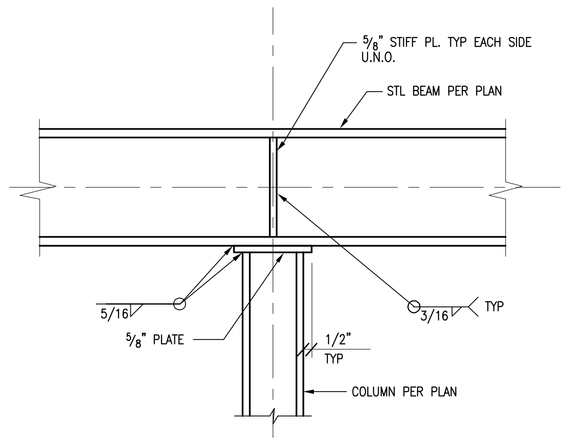

STL BEAM OVER Wx COLUMN
SCALE: NONE — 12 / S1.02

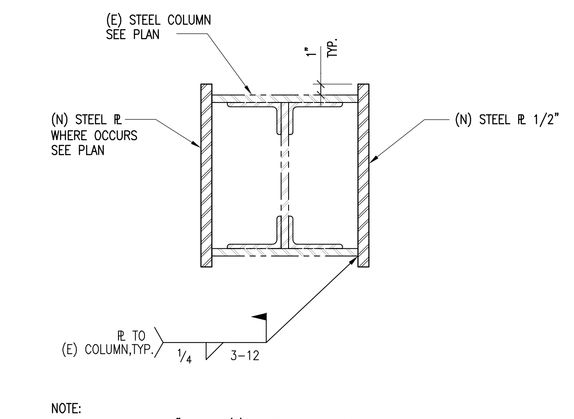

NOTE:
START PLATE WITHIN 1" ABOVE (E) CONC. SLAB, U.N.O.
END PLATE WITHIN 1" BELOW (E) STEEL BEAM CONCRETE COVER, U.N.O.

(E) COLUMN STRENGTHENING-PLAN
SCALE: NTS — 8 / S1.02

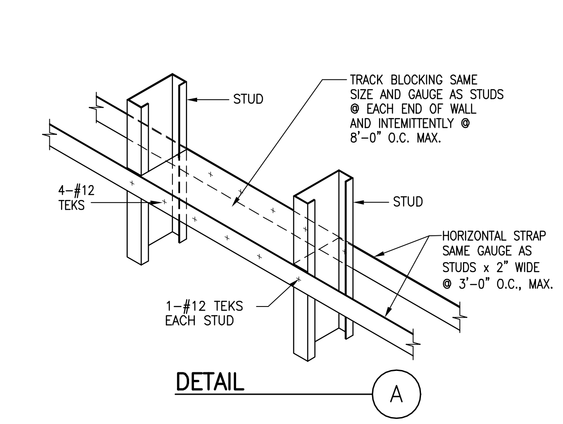

DETAIL — A

TYP. HORIZ. BRACING DETAIL
SCALE: NTS — 4 / S1.02

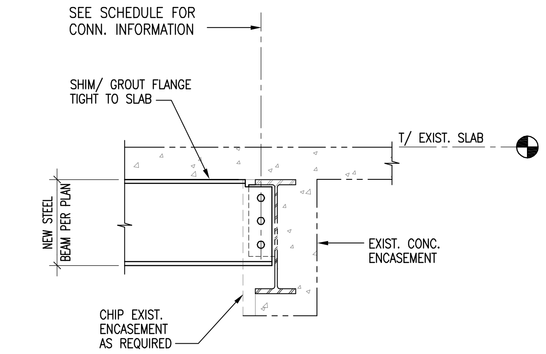

TYP NEW BEAM CONN. TO EXIST.
SCALE: NTS — 2 / S1.02

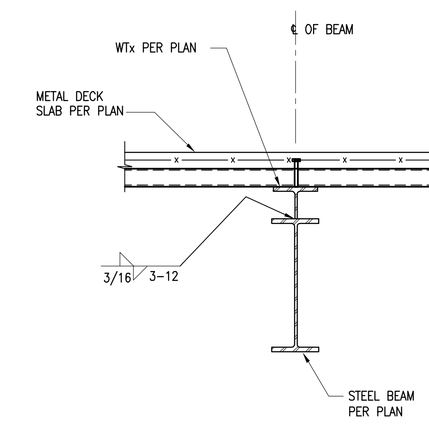

NOTE: CUT WT AS REQUIRED TO SUPPORT DECK

WTx TO Wx BEAM
SCALE: 1"=1'-0" — 13 / S1.02

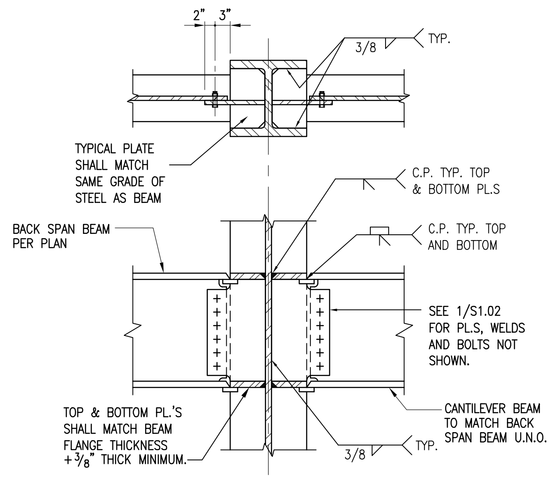

TYP. MOMENT BEAM TO COL.
SCALE: NTS — 9 / S1.02

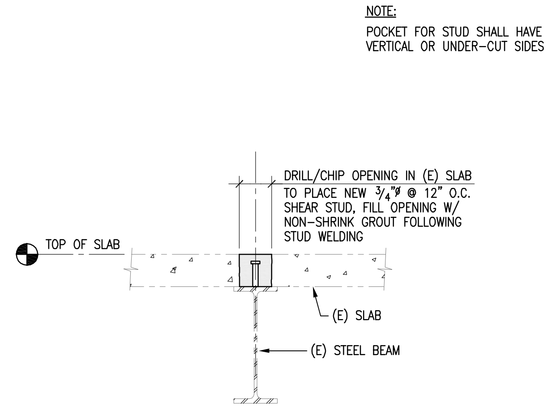

TYPICAL SHEAR STUD ADDED TO EXISTING BEAM DETAIL
SCALE: NTS — 5 / S1.02

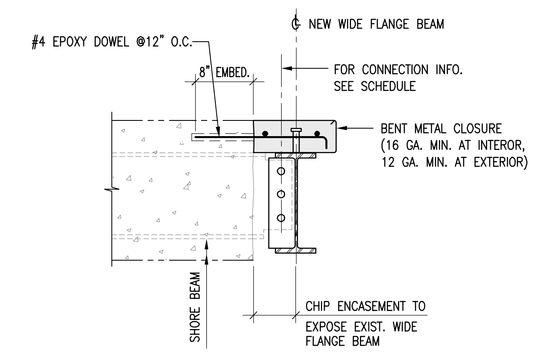

TYP CONN. OF EXIST BM TO NEW
SCALE: NTS — 3 / S1.02

NADEL Architects Inc.
1990 So. Bundy Dr.
Fourth Floor
Los Angeles, CA 90025
T. 310.826.2100
F. 310.826.0182
www.nadelarc.com

CONSULTANT

NABIH YOUSSEF & ASSOCIATES
Structural Engineers
800 Wilshire Boulevard, Suite 200
Los Angeles, California 90017
TEL: (213) 362-0707
FAX: (213) 896-0018

REGISTERED PROFESSIONAL ENGINEER — NABIH F. G. YOUSSEF — No. 2026 Exp. 9/30/09 — STRUCTURAL — STATE OF CALIFORNIA

COUNTY OF LOS ANGELES
THE HALL OF JUSTICE
STRUCTURAL RETROFIT PHASE

REVISIONS

△	
△	
△	
△	
△	
△	

DRAWING TITLE

TYPICAL DETAILS

SCOPING DOCUMENTS — 100% SUBMISSION — AUGUST 2010

SCALE :
DATE :
JOB NO : nya.05121.00
SHEET NO.
S1.02

K:\2005\05121-Hall of Justice\S\S1-02.dwg LAST PLOTTED ON Tue 07/08/08 - 11:47am

ALL DRAWINGS AND WRITTEN MATERIAL APPEARING HEREIN CONSTITUTE THE ORIGINAL AND UNPUBLISHED WORK OF THE ARCHITECT AND THE SAME MAY NOT BE DUPLICATED, USED OR DISCLOSED WITHOUT THE WRITTEN CONSENT OF THE ARCHITECT. COPYRIGHT: NADEL ARCHITECTS INC. ALL RIGHTS RESERVED.

MARK	METAL DECK TYPE	GAGE	TOTAL THICKNESS (t)	CONCRETE TYPE	REINF.	METAL DECK WELDING PATTERN PER SHEET			SEAM	MAX. UNSHORED SPAN		
						PERPENDICULAR TO DECK		PARALLEL TO DECK		SINGLE SPAN	DOUBLE SPAN	TRIPLE SPAN
						END	INTERMEDIATE	MARGINAL				
D-1	VERCO HSB-36	18	1 1/2"	–	–	7 WELDS PER SHT. TO SUPPORT	7 WELDS PER SHT. TO SUPPORT	1/2"ø PUDDLE WELD @ 12"O.C	TSW @ 12" O.C.	–	–	–
D-2	VERCO W3 FORMLOK	18	5 1/2"	f'c=3000 psi LT. WT.	6x6–W4xW4 W.W.F.	(4) 1/2"ø PUDDLE WELDS	(4) 1/2"ø PUDDLE WELDS	1/2"ø PUDDLE WELD @ 12"O.C	BUTTON PUNCH @ 36"O.C.	11'–6"	12'–6"	14'–0"
D-3	VERCO W2 FORMLOK	18	6"	f'c=3000 psi LT. WT.	6x6–W4xW4 W.W.F.	(4) 1/2"ø PUDDLE WELDS	(4) 1/2"ø PUDDLE WELDS	1/2"ø PUDDLE WELD @ 12"O.C	BUTTON PUNCH @ 36"O.C.	9'–0"	10'–0"	11'–0"
D-4	VERCO PLB	18	4 3/4"	f'c=3000 psi LT. WT.	6x6–W4xW4 W.W.F.	(4) 1/2"ø PUDDLE WELDS	(4) 1/2"ø PUDDLE WELDS	1/2"ø PUDDLE WELD @ 12"O.C	BUTTON PUNCH @ 36"O.C.	7'–6"	9'–0"	9'–6"

NOTES:

1. SEE GENERAL NOTES ON SHEET S1.0 FOR ADDITIONAL INFORMATION.
2. ALL METAL DECK SHALL CONFORM TO I.C.B.O. RESEARCH REPORT NO. ER–2078P.
3. PROVIDE VENT TABS AT ALL ROOF DECK TO VENTILATE DECKS WHEN INSULATING CONC. OR STRUCTURAL CONC. IS USED.
4. SHORE DECK WHERE CONC. THICKNESS EXCEEDS THICKNESS INDICATED IN SCHEDULE.
5. WHERE NELSON STUDS AND PUDDLE WELDS COINCIDE THE PUDDLE WELD MAY BE REPLACED BY THE STUDS ICBO EVALUATION REPORT NO. 2078
6. PROVIDE VERCO HSB–36 ACOUSTICAL ROOF DECK WHERE INDICATED ON ARCHITECTURAL DRAWINGS.
7. PUDDLE WELD SIZE IS EFFECTIVE WELD SIZE.

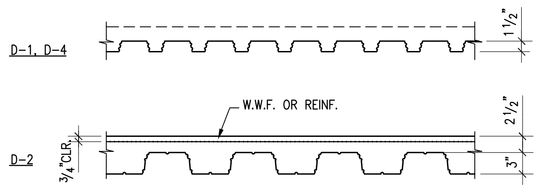

TYP. METAL DECK SECTION

SCALE: NONE

10 S1.03

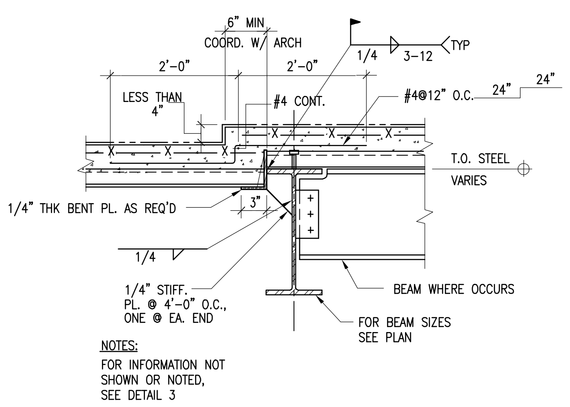

NOTES:
FOR INFORMATION NOT SHOWN OR NOTED, SEE DETAIL 3

TYP. DEPRESSED SLAB DETAIL

NOT TO SCALE

14 S1.03

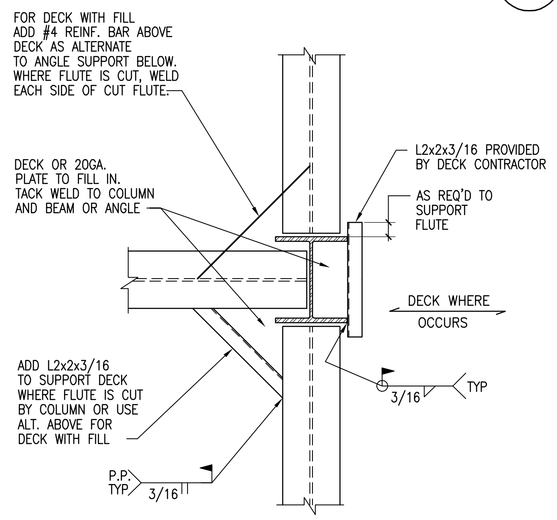

TYPICAL DECK SUPPORT AT COLUMN EXTENDING ABOVE FLOOR

SCALE: NTS

11 S1.03

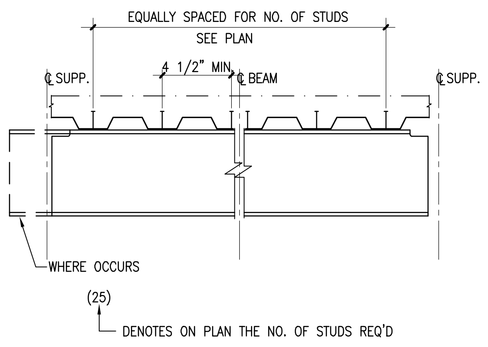

BEAM ELEVATION

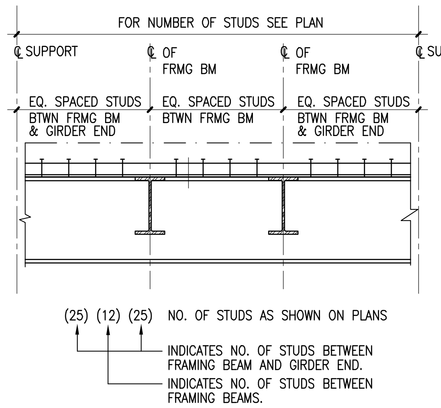

GIRDER ELEVATION

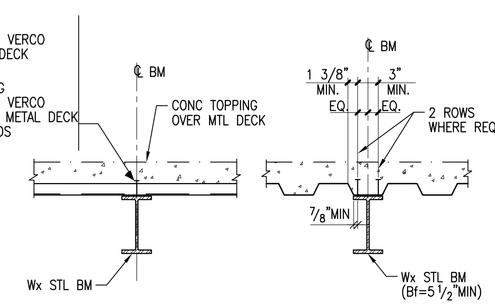

NOTES:

1. WELDED STUDS SHALL BE HEADED STUDS OF A TYPE IN CONFORMANCE WITH THE DESIGN CODES AND THE SPECIFICATIONS.
2. WHERE WELDED STUDS ARE NOT INDICATED ON FRAMING PLANS PROVIDE WELDED STUD SHEAR CONNECTORS @ 12" O.C. MAX. SPACING.

TYPICAL WELDED STUD DETAILS

SCALE: NONE

1 S1.03

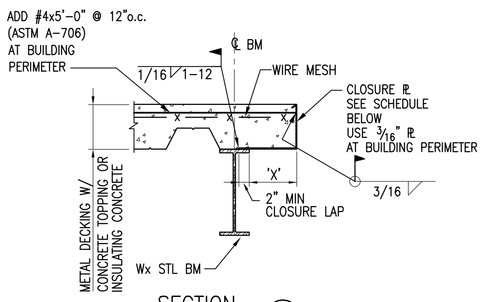

SECTION (A)

SCHEDULE	
	CLOSURE ℞
X < 3"	16 GA
3" < X < 7"	12 GA
7 < x > 9"	10 GA
9 < X < 12"	3/16"
X > 12"	SEE (B)

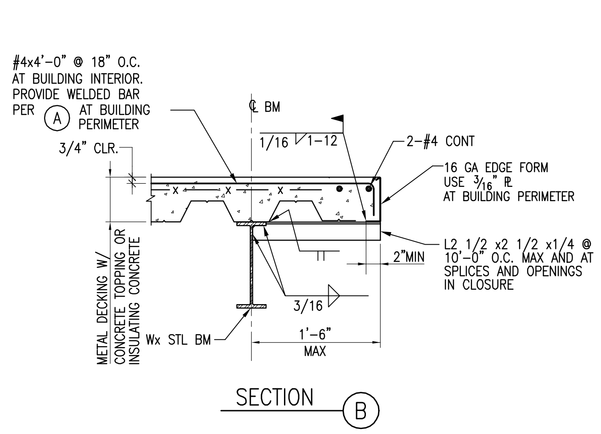

SECTION (B)

TYPICAL DECK PARALLEL TO SLAB EDGE

SCALE: NONE

5 S1.03

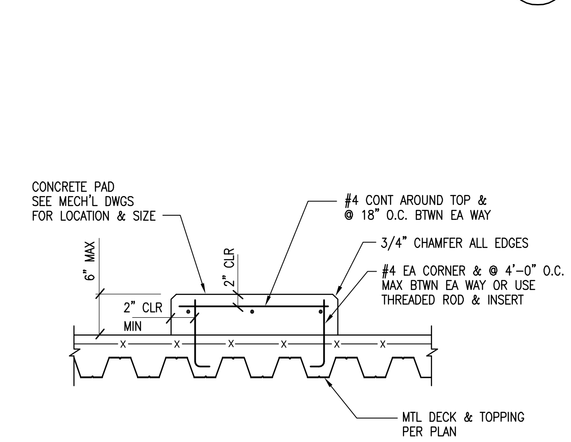

NOTE: AT (E) SLAB PROVIDE EPOXY DOWELS w/ 2" EMBEDMENT

TYP. MECHANICAL PAD DETAIL

SCALE: NONE

2 S1.03

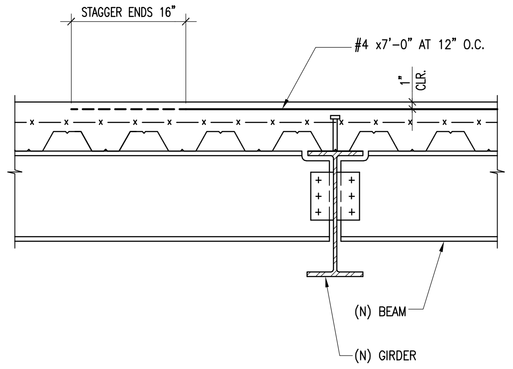

NEGATIVE REINF. AT GIRDERS

NOT TO SCALE

15 S1.03

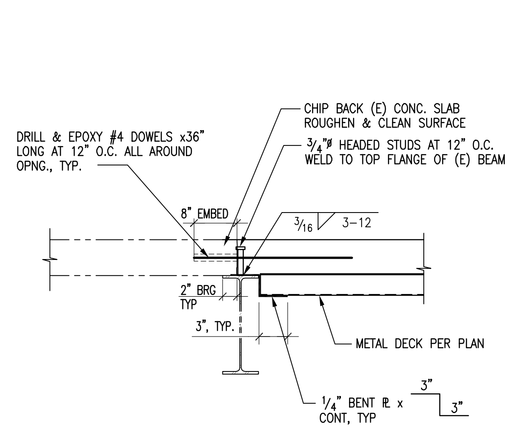

DECK TO (E) BEAM

SCALE: NTS

12 S1.03

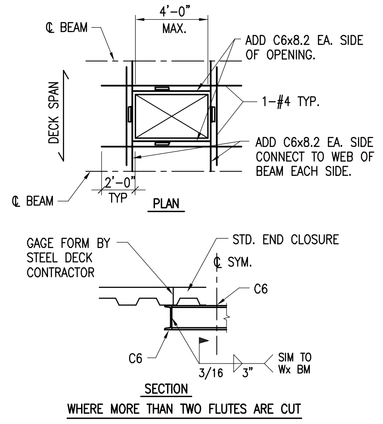

TYP. DECK OPENING DETAIL

SCALE: NONE

8 S1.03

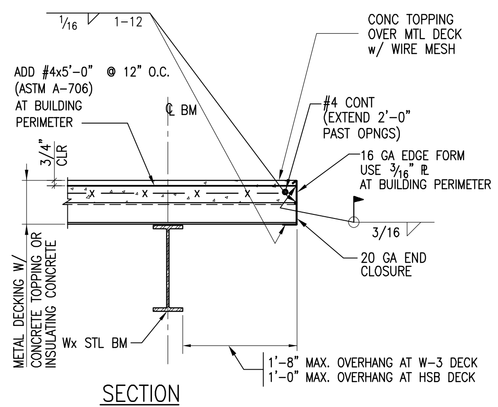

SECTION

TYP. DECK PERPENDICULAR TO SLAB EDGE DETAIL

SCALE: NONE

6 S1.03

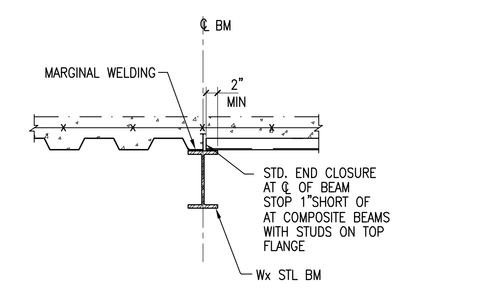

SECTION

TYP DETAIL AT CHANGE IN DIRECTION OF STEEL DECK

SCALE: NONE

3 S1.03

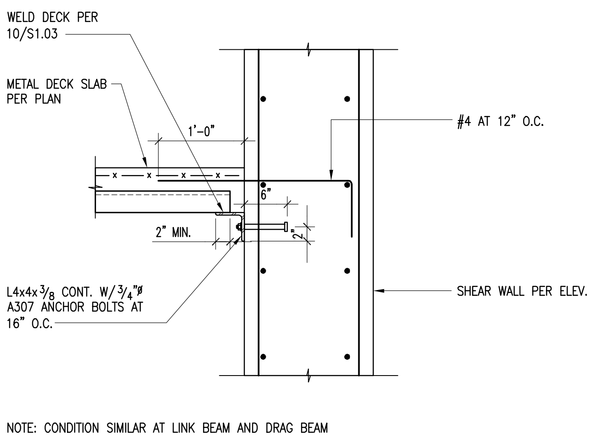

NOTE: CONDITION SIMILAR AT LINK BEAM AND DRAG BEAM

DECK TO WALL DETAIL

NOT TO SCALE

16 S1.03

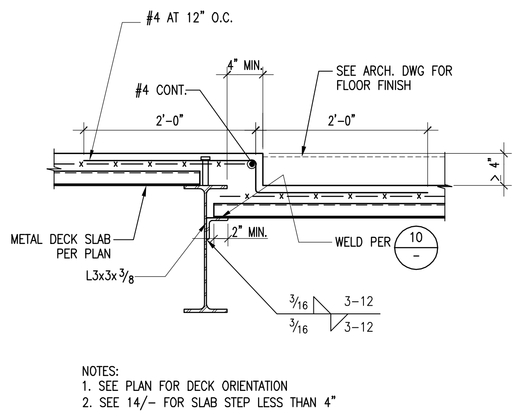

NOTES:
1. SEE PLAN FOR DECK ORIENTATION
2. SEE 14/– FOR SLAB STEP LESS THAN 4"

TYP DEPRESSED SLAB DETAIL

SCALE: NONE

13 S1.03

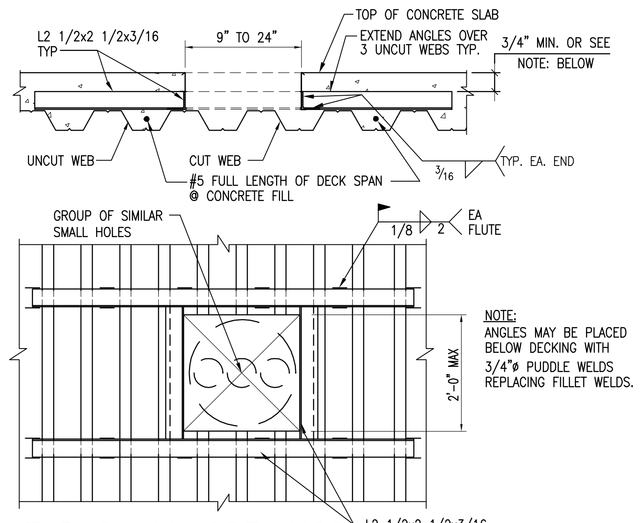

TYP SMALL OPENINGS IN FLOOR AND ROOF DECK

SCALE: NONE

9 S1.03

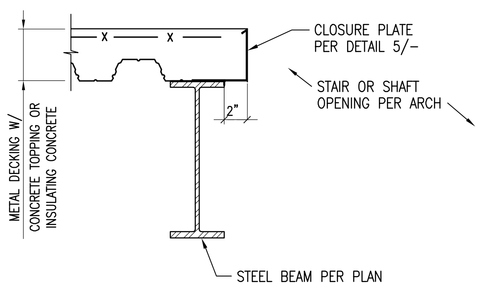

TYP. DECK AT SHAFT OPENING

SCALE: NONE

7 S1.03

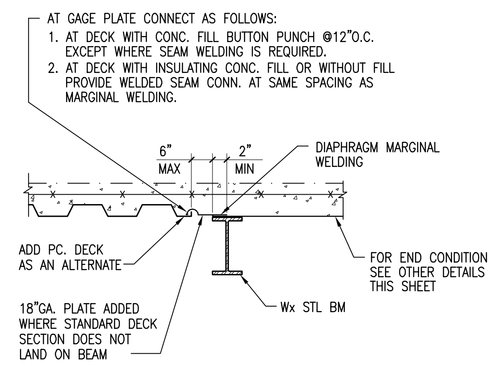

SECTION

TYP DETAIL WHERE PARALLEL DECK DOES NOT LAND ON BEAM

SCALE: NONE

4 S1.03

NADEL Architects Inc.

1990 So. Bundy Dr.
Fourth Floor
Los Angeles, CA 90025

T. 310.826.2100
F. 310.826.0182

www.nadelarc.com

CONSULTANT

NABIH YOUSSEF & ASSOCIATES
Structural Engineers
800 Wilshire Boulevard, Suite 200
Los Angeles, California 90017
TEL: (213) 362-0707
FAX: (213) 896-0018

REGISTERED PROFESSIONAL ENGINEER — NABIH F. G. YOUSSEF — No. 2026 Exp. 9/30/09 — STRUCTURAL — STATE OF CALIFORNIA

COUNTY OF LOS ANGELES

THE HALL OF JUSTICE

STRUCTURAL RETROFIT PHASE

REVISIONS

1	
2	
3	
4	
5	
6	

DRAWING TITLE

TYPICAL DETAILS

SCALE :
DATE :
JOB NO : nya.05121.00
SHEET NO.

S1.03

AUGUST 2010

100% SUBMISSION

SCOPING DOCUMENTS

K:\2005\05121-Hall of Justice\S\S1-03.dwg LAST PLOTTED ON Tue 07/08/08 – 11:47am

ALL DRAWINGS AND WRITTEN MATERIAL APPEARING HEREIN CONSTITUTE THE ORIGINAL AND UNPUBLISHED WORK OF THE ARCHITECT AND THE SAME MAY NOT BE DUPLICATED, USED OR DISCLOSED WITHOUT THE WRITTEN CONSENT OF THE ARCHITECT. COPYRIGHT: NADEL ARCHITECTS INC. ALL RIGHTS RESERVED.

ALL DRAWINGS AND WRITTEN MATERIAL APPEARING HEREIN CONSTITUTE THE ORIGINAL AND UNPUBLISHED WORK OF THE ARCHITECT AND THE SAME MAY NOT BE DUPLICATED, USED OR DISCLOSED WITHOUT THE WRITTEN CONSENT OF THE ARCHITECT. COPYRIGHT: NADEL ARCHITECTS INC. ALL RIGHTS RESERVED.

X:\2005\05121-Hall of Justice\S2-00.dwg LAST PLOTTED On Tue 07/08/08 - 11:49pm

FOUNDATION FLOOR PLAN

SCALE: 1/8"=1'-0" | 1

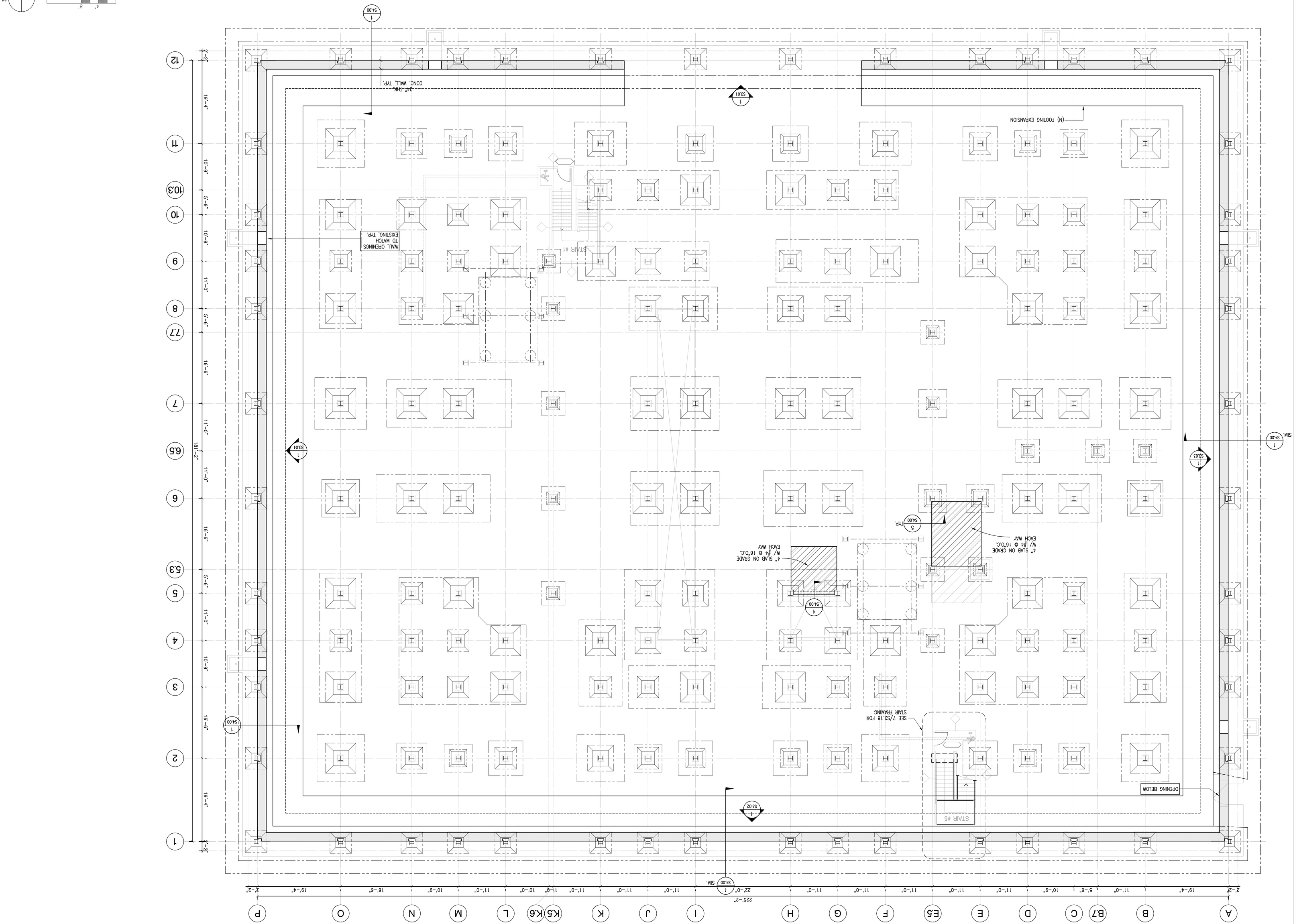

S2.00

SHEET NO.

JOB NO : nya.051210.0

DATE :

SCALE : 1/8"=1'-0"

FOUNDATION FLOOR PLAN

SCOPING DOCUMENTS 100% SUBMISSION AUGUST 2010

DRAWING TITLE

REVISIONS	

COUNTY OF LOS ANGELES

THE HALL OF JUSTICE

STRUCTURAL RETROFIT PHASE

CONSULTANT

NABIH YOUSSEF & ASSOCIATES
Structural Engineers
333 South Hope Street, 35th Floor
Los Angeles, California 90071
TEL: (213) 620-1100
FAX: (213) 620-0100

REGISTERED PROFESSIONAL ENGINEER
NABIH F. G. YOUSSEF
No. 2026
Exp. 9/30/09
STATE OF CALIFORNIA
STRUCTURAL

NADEL Architects Inc.
1990 So. Bundy Dr.
Fourth Floor
Los Angeles, CA 90025
T. 310.826.2100
F. 310.826.0182
www.nadelarc.com

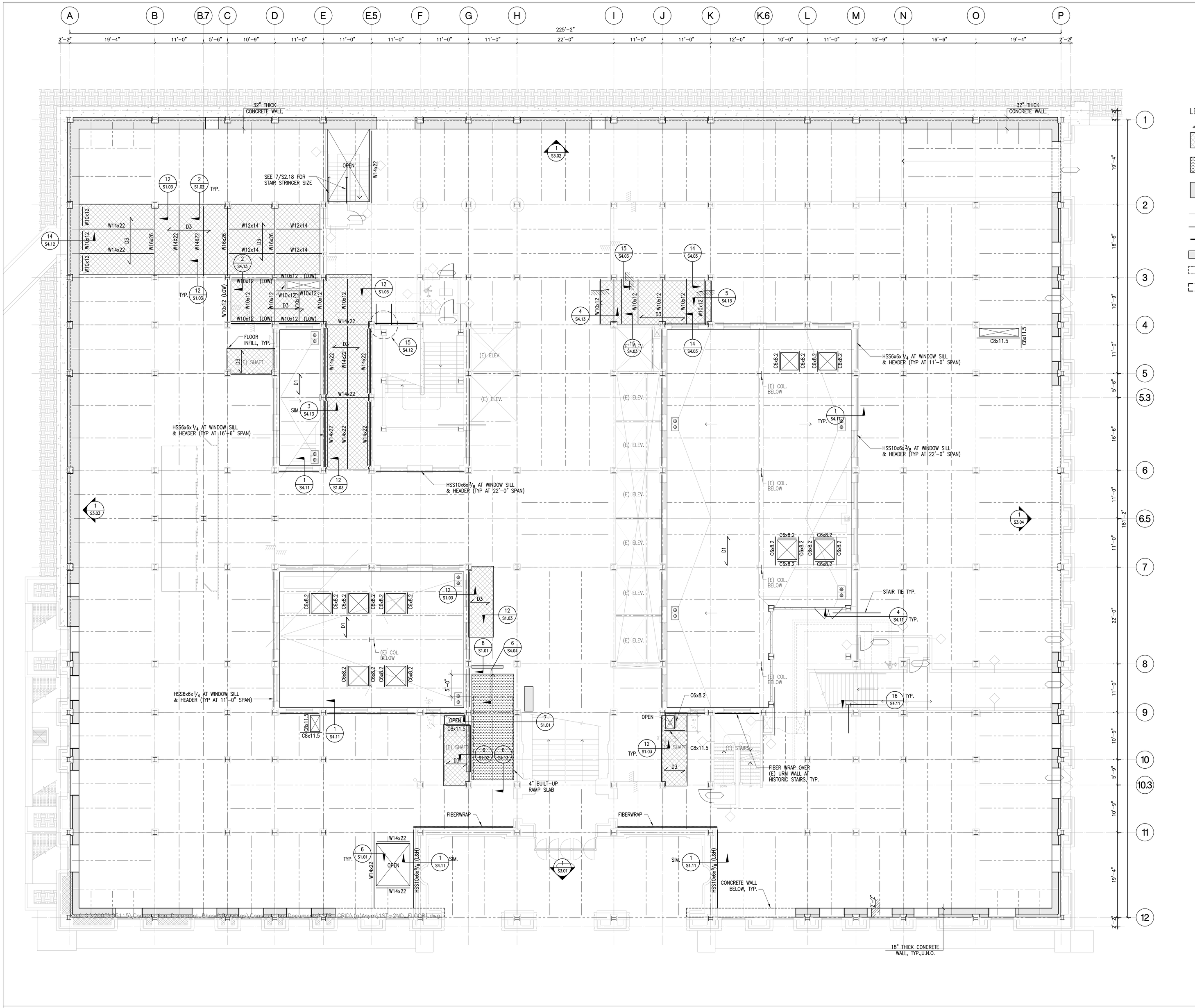

LEGEND:

- D3 = METAL DECK INFILL SLAB PER 10/S1.03
- = BUILT-UP SLAB PER 7/S1.01
- = SMALL OPENING INFILL PER 8/S1.01
- = (E) STEEL BEAM
- = STEEL BEAM
- = FIBER WRAP AT URM WALL
- = CONCRETE WALL
- = CONCRETE WALL BELOW
- = DRAG BEAM BELOW
- D1 = DECK TYPE SEE 10/S1.03

NADEL Architects Inc.

1990 So. Bundy Dr.
Fourth Floor
Los Angeles, CA 90025

T. 310.826.2100
F. 310.826.0182

www.nadelarc.com

CONSULTANT

NABIH YOUSSEF & ASSOCIATES
Structural Engineers
800 Wilshire Boulevard, Suite 200
Los Angeles, California 90017
TEL: (213) 362-0707
FAX: (213) 688-3018

REGISTERED PROFESSIONAL ENGINEER NABIH F. G. YOUSSEF No. 2026 Exp. 9/30/09 STRUCTURAL STATE OF CALIFORNIA

COUNTY OF LOS ANGELES
THE HALL OF JUSTICE
STRUCTURAL RETROFIT PHASE

REVISIONS

DRAWING TITLE

FIRST FLOOR PLAN

SCOPING DOCUMENTS 100% SUBMISSION AUGUST 2010

SCALE : 1/8"=1'-0"
DATE :
JOB NO : nya.05121.00
SHEET NO.
S2.01

FIRST FLOOR PLAN | SCALE: 1/8"=1'-0" | 1

X:\2005\05121-Hall of Justice\S\S2-01.dwg LAST PLOTTED ON Tue 07/08/08 - 11:49am

ALL DRAWINGS AND WRITTEN MATERIAL APPEARING HEREIN CONSTITUTE THE ORIGINAL AND UNPUBLISHED WORK OF THE ARCHITECT AND THE SAME MAY NOT BE DUPLICATED, USED OR DISCLOSED WITHOUT THE WRITTEN CONSENT OF THE ARCHITECT. COPYRIGHT: NADEL ARCHITECTS INC. ALL RIGHTS RESERVED.

ALL DRAWINGS AND WRITTEN MATERIAL APPEARING HEREIN CONSTITUTE THE ORIGINAL AND UNPUBLISHED WORK OF THE ARCHITECT AND THE SAME MAY NOT BE DUPLICATED, USED OR DISCLOSED WITHOUT THE WRITTEN CONSENT OF THE ARCHITECT. COPYRIGHT: NADEL ARCHITECTS INC. ALL RIGHTS RESERVED.

X:\2005\05121-HAR 01 Justice\S\S2-02.dwg LAST PLOTTED ON Tue 07/08/08 - 11:49pm

SECOND FLOOR PLAN

SCALE: 1/8"=1'-0" | 1

ALL DIMENSIONS AND MATERIAL APPROVING HEREIN CONSTITUTE THE ORIGINAL AND UNPUBLISHED WORK OF THE ARCHITECT AND THE SAME MAY NOT BE DUPLICATED, USED OR DISCLOSED WITHOUT THE WRITTEN CONSENT OF THE ARCHITECT. COPYRIGHT: NADEL ARCHITECTS INC. ALL RIGHTS RESERVED.

X:\2005\05121-hall of Justice\S\S2-03.dwg LAST PLOTTED ON Tue 07/08/08 - 11:49pm

THIRD FLOOR PLAN

SCALE: 1/8"=1'-0" | 1

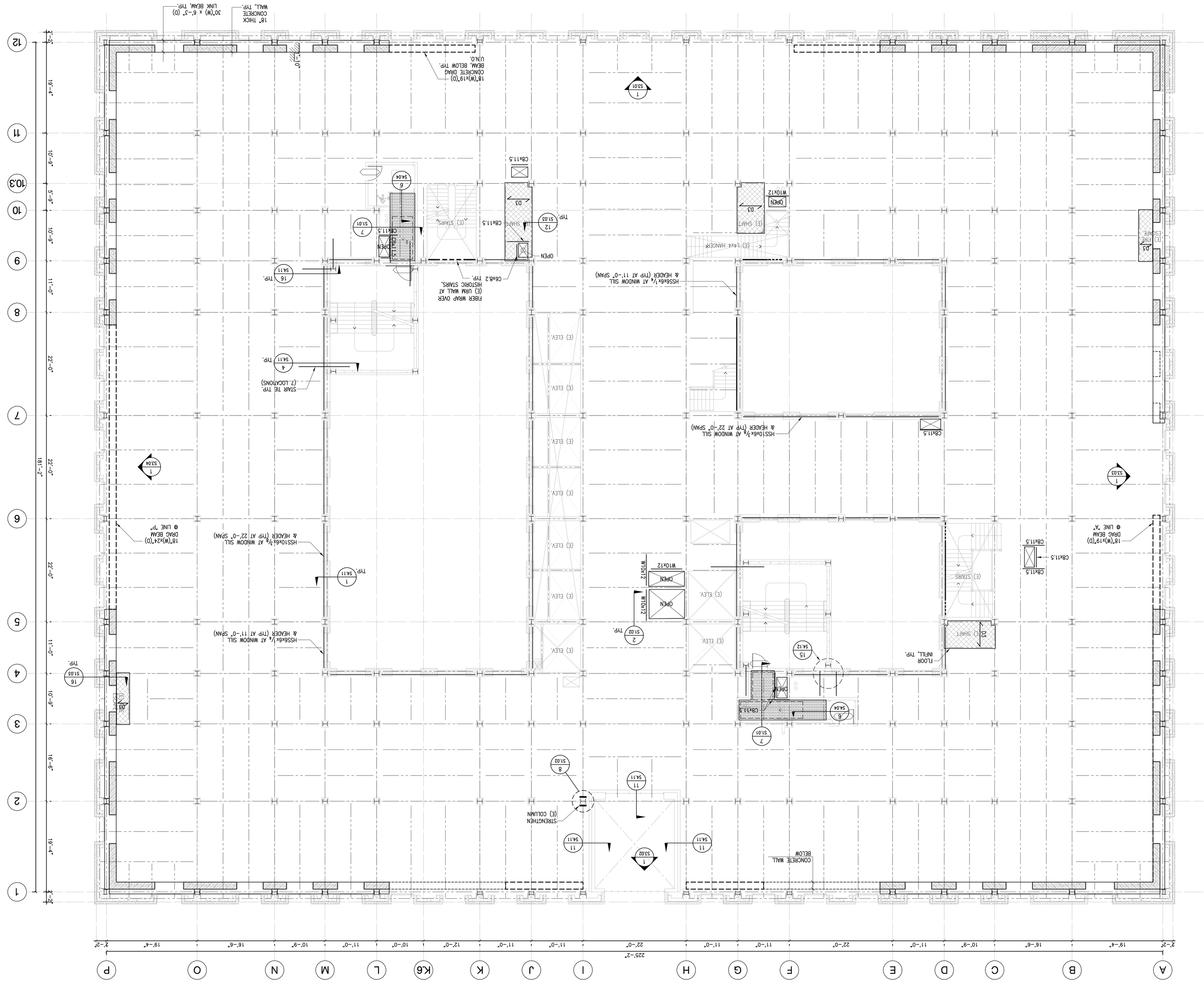

ALL DRAWINGS AND WRITTEN MATERIAL APPEARING HEREIN CONSTITUTE THE ORIGINAL AND UNPUBLISHED WORK OF THE ARCHITECT AND THE SAME MAY NOT BE DUPLICATED, USED OR DISCLOSED WITHOUT THE WRITTEN CONSENT OF THE ARCHITECT. COPYRIGHT: NADEL ARCHITECTS INC. ALL RIGHTS RESERVED.

X:\2005\05121-HAR 6\Arch\S\S2-04.dwg LAST PLOTTED ON Tue 07/08/08 - 11:49pm

FOURTH FLOOR PLAN

SCALE: 1/8"=1'-0" | 1

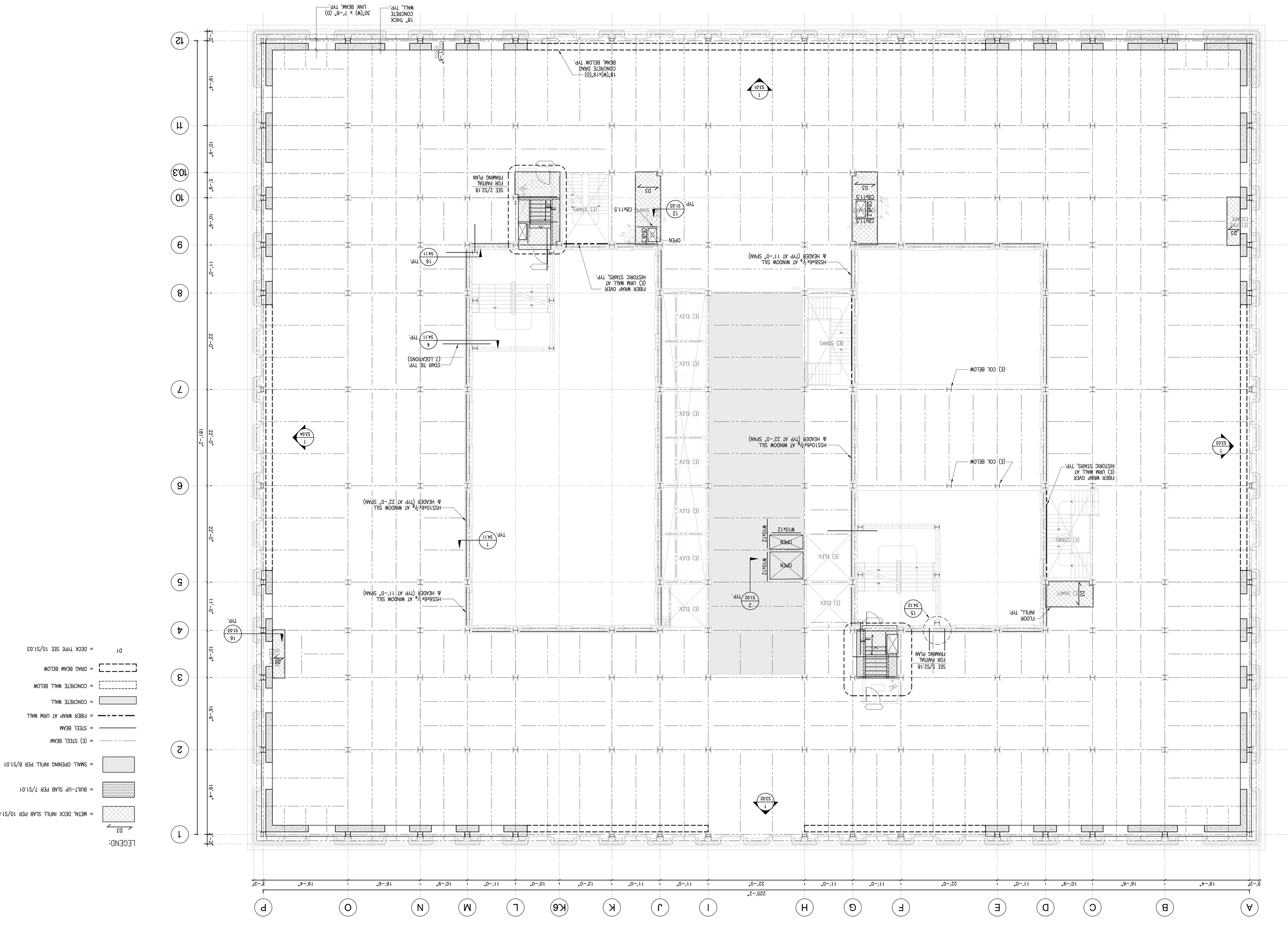

SCOPING DOCUMENTS 100% SUBMISSION AUGUST 2010

S2.04

SHEET NO.

JOB NO : nya.0512100

DATE :

SCALE : 1/8"=1'-0"

FOURTH FLOOR PLAN

DRAWING TITLE

REVISIONS

CONSULTANT

NABIH YOUSSEF & ASSOCIATES
Structural Engineers
600 Wilshire Boulevard, Suite 800
Los Angeles, California 90017
TEL: (213) 362-0700
FAX: (213) 688-3018

REGISTERED PROFESSIONAL ENGINEER
NABIH F. G. YOUSSEF
No. 2026
Exp. 9/30/09
STRUCTURAL
STATE OF CALIFORNIA

COUNTY OF LOS ANGELES
THE HALL OF JUSTICE
STRUCTURAL RETROFIT PHASE

NADEL Architects Inc.

1990 So. Bundy Dr.
Fourth Floor
Los Angeles, CA 90025
T. 310.826.2100
F. 310.826.0182
www.nadelarc.com

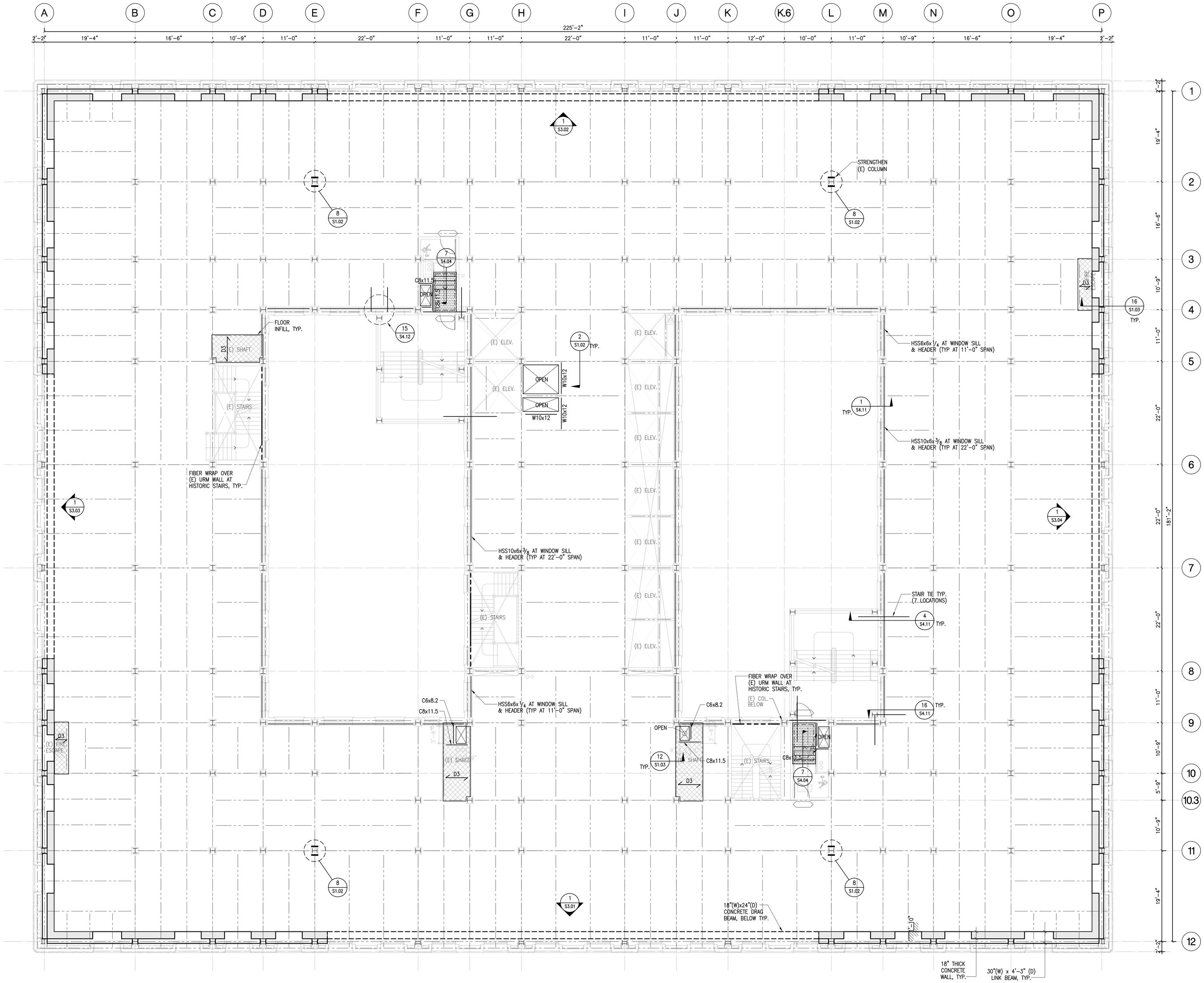

LEGEND:

- D3 = METAL DECK INFILL SLAB PER 10/S1.03
- = BUILT-UP SLAB PER 7/S1.01
- = SMALL OPENING INFILL PER 8/S1.01
- = (E) STEEL BEAM
- = STEEL BEAM
- = FIBER WRAP AT URM WALL
- = CONCRETE WALL
- = CONCRETE WALL BELOW
- = DRAG BEAM BELOW
- D1 = DECK TYPE SEE 10/S1.03

NADEL Architects Inc.

1990 So. Bundy Dr.
Fourth Floor
Los Angeles, CA 90025

T. 310.826.2100
F. 310.826.0182

www.nadelarc.com

CONSULTANT

NABIH YOUSSEF & ASSOCIATES
Structural Engineers
800 Wilshire Boulevard, Suite 200
Los Angeles, California 90017
TEL: (213) 362-0707
FAX: (213) 688-3018

REGISTERED PROFESSIONAL ENGINEER
NABIH F. G. YOUSSEF
No. 2026
Exp. 9/30/09
STRUCTURAL
STATE OF CALIFORNIA

COUNTY OF LOS ANGELES
THE HALL OF JUSTICE
STRUCTURAL RETROFIT PHASE

REVISIONS

DRAWING TITLE

FIFTH FLOOR PLAN

SCOPING DOCUMENTS 100% SUBMISSION AUGUST 2010

SCALE : 1/8"=1'-0"
DATE :
JOB NO : nya.05121.00
SHEET NO.
S2.05

FIFTH FLOOR PLAN | SCALE: 1/8"=1'-0" | 1

X:\2005\05121-Hall of Justice\S\S2-05.dwg LAST PLOTTED ON Tue 07/08/08 - 11:49am

ALL DRAWINGS AND WRITTEN MATERIAL APPEARING HEREIN CONSTITUTE THE ORIGINAL AND UNPUBLISHED WORK OF THE ARCHITECT AND THE SAME MAY NOT BE DUPLICATED, USED OR DISCLOSED WITHOUT THE WRITTEN CONSENT OF THE ARCHITECT. COPYRIGHT: NADEL ARCHITECTS INC. ALL RIGHTS RESERVED.

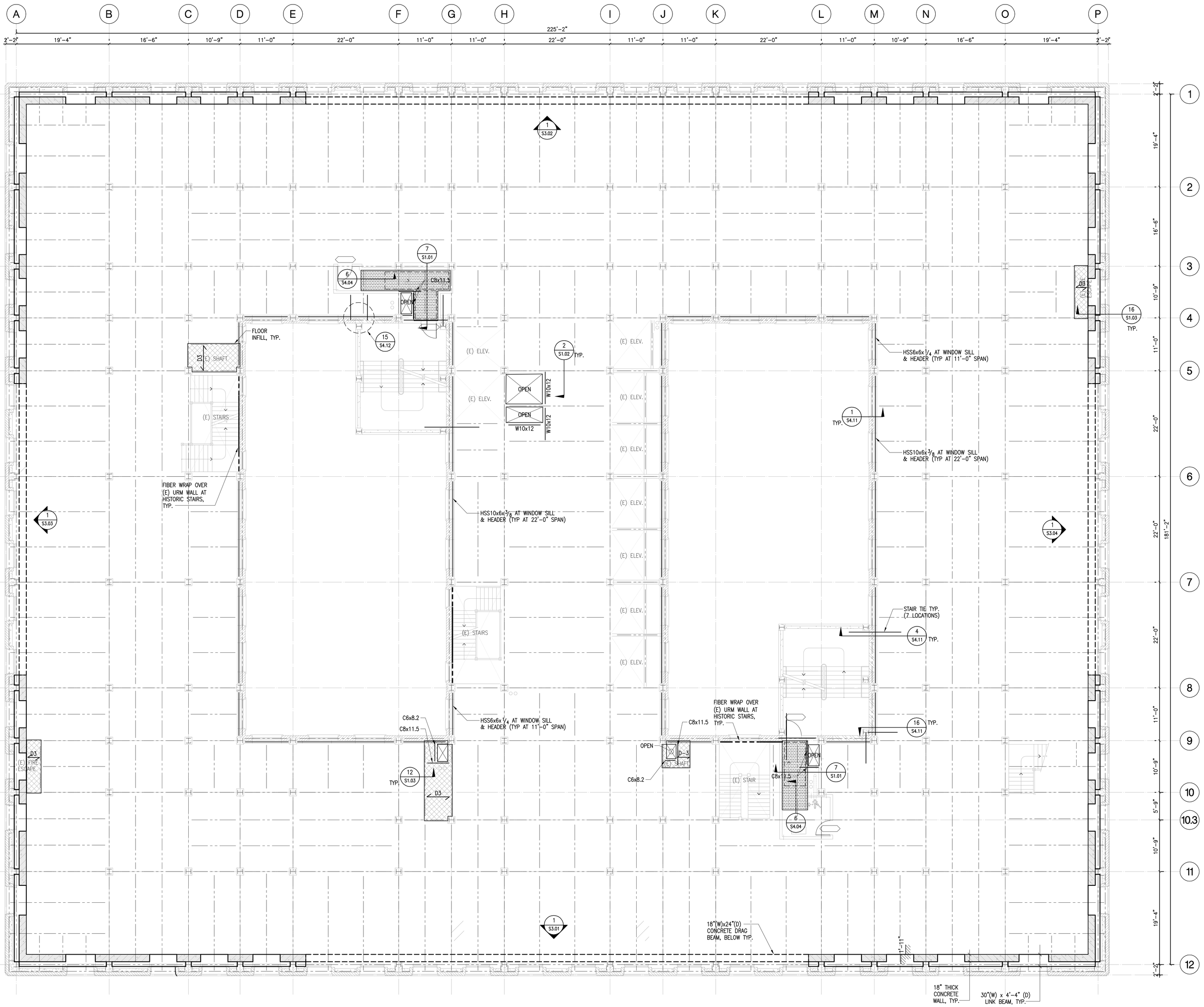

LEGEND:

- D3 = METAL DECK INFILL SLAB PER 10/S1.03
- = BUILT-UP SLAB PER 7/S1.01
- = SMALL OPENING INFILL PER 8/S1.01
- = (E) STEEL BEAM
- = STEEL BEAM
- = FIBER WRAP AT URM WALL
- = CONCRETE WALL
- = CONCRETE WALL BELOW
- = DRAG BEAM BELOW
- D1 = DECK TYPE SEE 10/S1.03

4' 8' 0' 2' 6' 16' N

SIXTH FLOOR PLAN | SCALE: 1/8"=1'-0" | 1

NADEL Architects Inc.

1990 So. Bundy Dr.
Fourth Floor
Los Angeles, CA 90025

T. 310.826.2100
F. 310.826.0182

www.nadelarc.com

CONSULTANT

NABIH YOUSSEF & ASSOCIATES
Structural Engineers
800 Wilshire Boulevard, Suite 200
Los Angeles, California 90017
TEL: (213) 362-0707
FAX: (213) 896-0018

REGISTERED PROFESSIONAL ENGINEER
NABIH F. G. YOUSSEF
No. 2026
Exp. 9/30/09
STRUCTURAL
STATE OF CALIFORNIA

COUNTY OF LOS ANGELES
THE HALL OF JUSTICE
STRUCTURAL RETROFIT PHASE

REVISIONS

DRAWING TITLE

SIXTH FLOOR PLAN

SCALE : 1/8"=1'-0"
DATE :
JOB NO : nya.05121.00
SHEET NO.
S2.06

SCOPING DOCUMENTS 100% SUBMISSION AUGUST 2010

K:\2005\05121-Hall of Justice\S\S2-06.dwg LAST PLOTTED ON Tue 07/08/08 - 11:49am

ALL DRAWINGS AND WRITTEN MATERIAL APPEARING HEREIN CONSTITUTE THE ORIGINAL AND UNPUBLISHED WORK OF THE ARCHITECT AND THE SAME MAY NOT BE DUPLICATED, USED OR DISCLOSED WITHOUT THE WRITTEN CONSENT OF THE ARCHITECT. COPYRIGHT: NADEL ARCHITECTS INC. ALL RIGHTS RESERVED.

ALL DRAWINGS AND WRITTEN MATERIAL APPEARING HEREIN CONSTITUTE THE ORIGINAL AND UNPUBLISHED WORK OF THE ARCHITECT AND THE SAME MAY NOT BE DUPLICATED, USED OR DISCLOSED WITHOUT THE WRITTEN CONSENT OF THE ARCHITECT. COPYRIGHT: NADEL ARCHITECTS INC. ALL RIGHTS RESERVED.

X:\2005\05121-HAR 61 Jobs\CS\S2-07.dwg LAST PLOTTED On Tue 07/08/08 - 11:49pm

SEVENTH FLOOR PLAN

SCALE: 1/8"=1'-0"

1

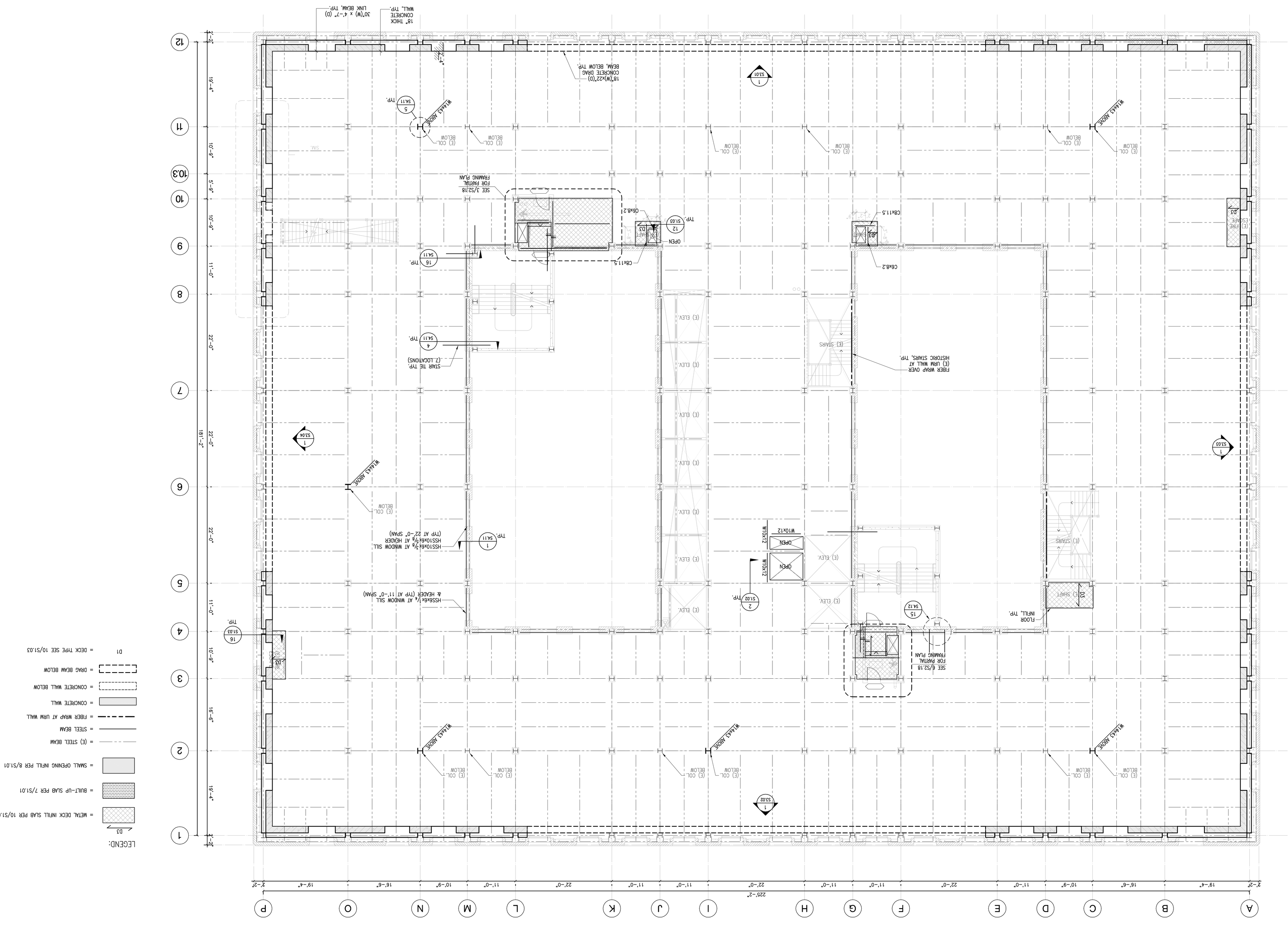

LEGEND:

- D3 = METAL DECK INFILL SLAB PER 10/S1.03
- = BUILT-UP SLAB PER 7/S1.01
- = SMALL OPENING INFILL PER 8/S1.01
- = (E) STEEL BEAM
- = STEEL BEAM
- = FIBER WRAP AT URM WALL
- = CONCRETE WALL
- = CONCRETE WALL BELOW
- = DRAG BEAM BELOW
- D1 = DECK TYPE SEE 10/S1.03

N

0' 2' 6' 8' 16'

SCOPING DOCUMENTS 100% SUBMISSION AUGUST 2010

SEVENTH FLOOR PLAN

SCALE : 1/8"=1'-0"

DATE :

JOB NO : nya.0512100

SHEET NO.

S2.07

DRAWING TITLE

REVISIONS

CONSULTANT

NABIH YOUSSEF & ASSOCIATES
Structural Engineers
600 Wilshire Boulevard, Suite 500
Los Angeles, California 90017
TEL: (213) 362-0700
FAX: (213) 688-3018

REGISTERED PROFESSIONAL ENGINEER
NABIH F. G. YOUSSEF
No. 2026
Exp. 9/30/09
STATE OF CALIFORNIA
STRUCTURAL

1990 So. Bundy Dr.
Fourth Floor
Los Angeles, CA 90025
T. 310.826.2100
F. 310.826.0182
www.nadelarc.com

NADEL
Architects Inc.

COUNTY OF LOS ANGELES

THE HALL OF JUSTICE

STRUCTURAL RETROFIT PHASE

ALL DIMENSIONS AND MATERIAL APPEARING HEREIN CONSTITUTE THE ORIGINAL AND UNPUBLISHED WORK OF THE ARCHITECT AND THE SAME MAY NOT BE DUPLICATED, USED OR DISCLOSED WITHOUT THE WRITTEN CONSENT OF THE ARCHITECT. COPYRIGHT: NADEL ARCHITECTS INC. ALL RIGHTS RESERVED.

X:\2005\05121-HAR 61 Admin\S\S2-08.dwg LAST PLOTTED On Tue 07/06/10 - 11:49pm

EIGHTH FLOOR PLAN

SCALE: 1/8"=1'-0" | 1

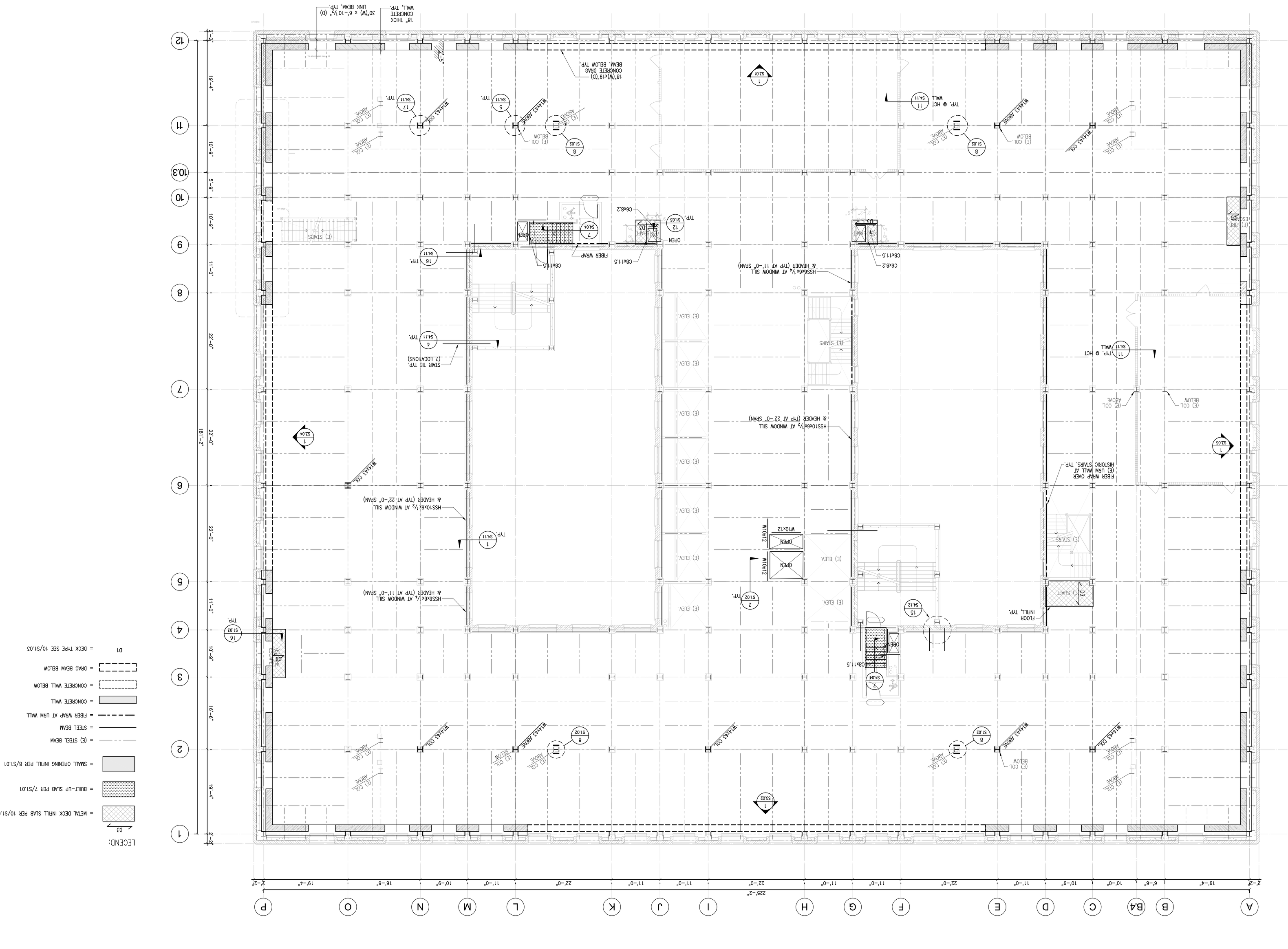

LEGEND:

- D3 = METAL DECK INFILL SLAB PER 10/S1.03
- = BULT-UP SLAB PER 7/S1.01
- = SMALL OPENING INFIL PER 8/S1.01
- = (E) STEEL BEAM
- = STEEL BEAM
- = FIBER WRAP AT URM WALL
- = CONCRETE WALL
- = CONCRETE WALL BELOW
- = DRAG BEAM BELOW
- D1 = DECK TYPE SEE 10/S1.03

N

0' 2' 8' 4' 16'

SCOPING DOCUMENTS 100% SUBMISSION AUGUST 2010

S2.08

SHEET NO.

JOB NO : nya.0512100

DATE :

SCALE : 1/8"=1'-0"

EIGHTH FLOOR PLAN

COUNTY OF LOS ANGELES
THE HALL OF JUSTICE
STRUCTURAL RETROFIT PHASE

REVISIONS

DRAWING TITLE

CONSULTANT

NABIH YOUSSEF & ASSOCIATES
Structural Engineers
800 Wilshire Boulevard, Suite 800
Los Angeles, California 90017
TEL: (213) 892-0702
FAX: (213) 688-3018

REGISTERED PROFESSIONAL ENGINEER
No. 2026
Exp. 9/30/09
MARY F. G. YOUSSEF
STATE OF CALIFORNIA

NADEL
Architects Inc.

1990 So. Bundy Dr.
Fourth Floor
Los Angeles, CA 90025
T. 310.826.2100
F. 310.826.0182
www.nadelarc.com

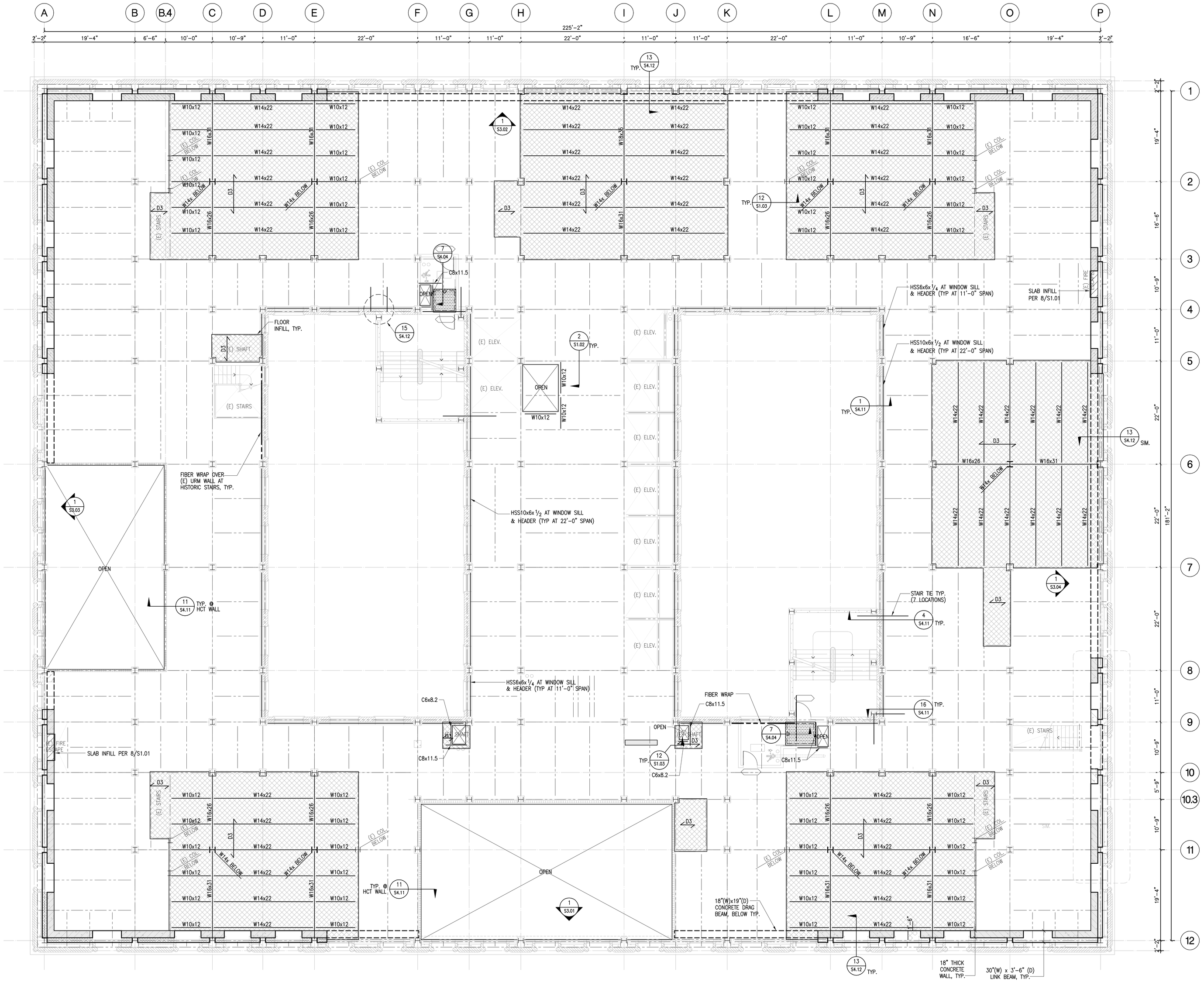

LEGEND:

- D3 = METAL DECK INFILL SLAB PER 10/S1.03
- = BUILT-UP SLAB PER 7/S1.01
- = SMALL OPENING INFILL PER 8/S1.01
- = (E) STEEL BEAM
- = STEEL BEAM
- = FIBER WRAP AT URM WALL
- = CONCRETE WALL
- = CONCRETE WALL BELOW
- = DRAG BEAM BELOW
- D1 = DECK TYPE SEE 10/S1.03

NADEL Architects Inc.

1990 So. Bundy Dr.
Fourth Floor
Los Angeles, CA 90025
T. 310.826.2100
F. 310.826.0182
www.nadelarc.com

CONSULTANT

NABIH YOUSSEF & ASSOCIATES
Structural Engineers
800 Wilshire Boulevard, Suite 200
Los Angeles, California 90017
TEL: (213) 362-0707
FAX: (213) 688-3018

REGISTERED PROFESSIONAL ENGINEER
NABIH F. G. YOUSSEF
No. 2026
Exp. 9/30/09
STRUCTURAL
STATE OF CALIFORNIA

COUNTY OF LOS ANGELES
THE HALL OF JUSTICE
STRUCTURAL RETROFIT PHASE

REVISIONS

DRAWING TITLE

NINTH FLOOR PLAN

SCOPING DOCUMENTS 100% SUBMISSION AUGUST 2010

SCALE : 1/8"=1'-0"
DATE :
JOB NO : nya.05121.00
SHEET NO.
S2.09

NINTH FLOOR PLAN | SCALE: 1/8"=1'-0" | 1

X:\2005\05121-Hall of Justice\S\S2-09.dwg LAST PLOTTED ON Tue 07/08/08 - 11:49am

ALL DRAWINGS AND WRITTEN MATERIAL APPEARING HEREIN CONSTITUTE THE ORIGINAL AND UNPUBLISHED WORK OF THE ARCHITECT AND THE SAME MAY NOT BE DUPLICATED, USED OR DISCLOSED WITHOUT THE WRITTEN CONSENT OF THE ARCHITECT. COPYRIGHT: NADEL ARCHITECTS INC. ALL RIGHTS RESERVED.

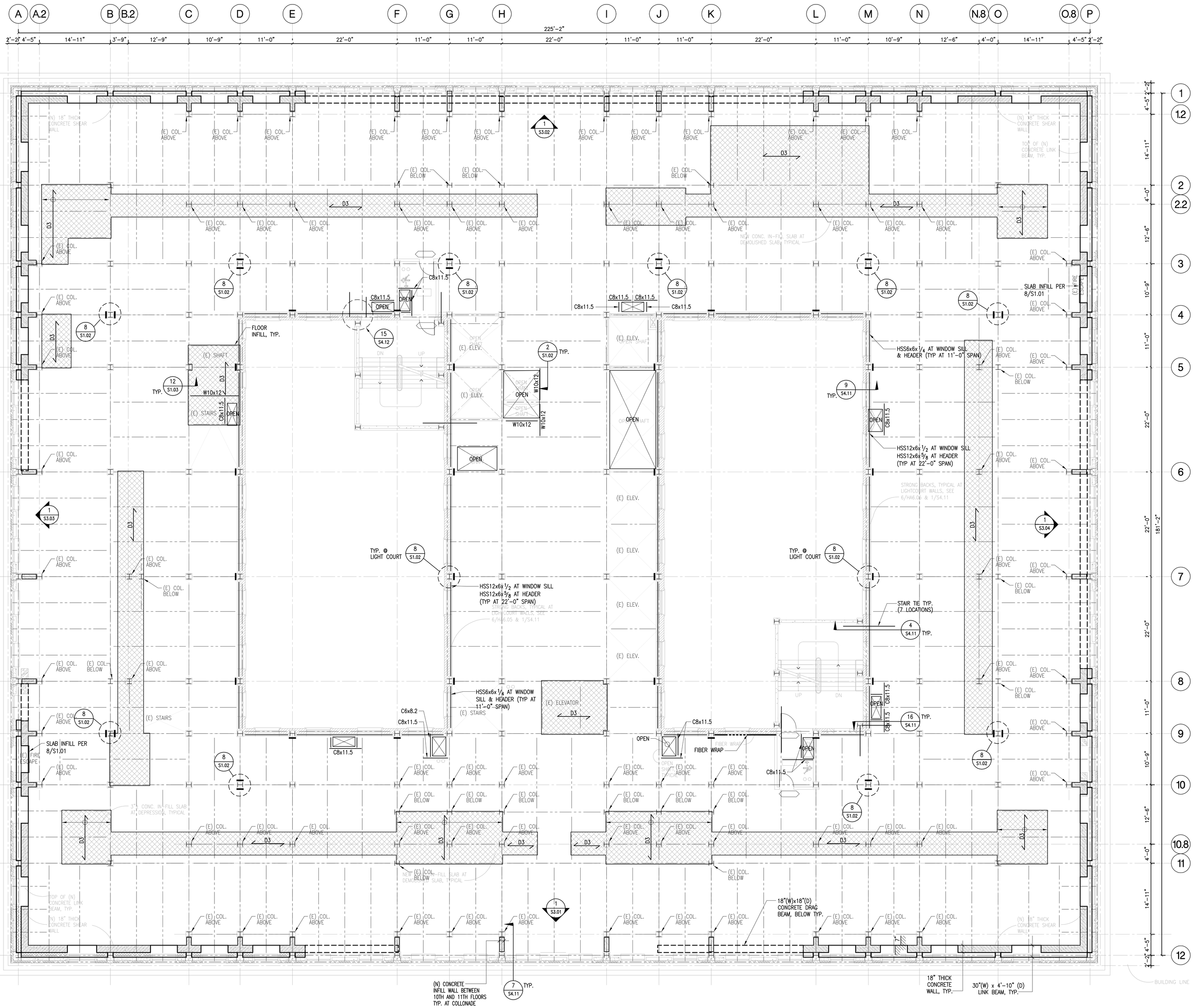

LEGEND:

- D3 = METAL DECK INFILL SLAB PER 10/S1.03
- = BUILT-UP SLAB PER 7/S1.01
- = SMALL OPENING INFILL PER 8/S1.01
- = (E) STEEL BEAM
- = STEEL BEAM
- = FIBER WRAP AT URM WALL
- = CONCRETE WALL
- = CONCRETE WALL BELOW
- = DRAG BEAM BELOW
- D1 = DECK TYPE SEE 10/S1.03

4' 8' 0' 2' 6' 16'

N

TENTH FLOOR PLAN | SCALE: 1/8"=1'-0" | 1

NADEL Architects Inc.

1990 So. Bundy Dr.
Fourth Floor
Los Angeles, CA 90025

T. 310.826.2100
F. 310.826.0182

www.nadelarc.com

CONSULTANT

NABIH YOUSSEF & ASSOCIATES
Structural Engineers
800 Wilshire Boulevard, Suite 200
Los Angeles, California 90017
TEL: (213) 362-0707
FAX: (213) 362-3018

REGISTERED PROFESSIONAL ENGINEER
NABIH F. G. YOUSSEF
No. 2026
Exp. 9/30/09
STRUCTURAL
STATE OF CALIFORNIA

COUNTY OF LOS ANGELES
THE HALL OF JUSTICE
STRUCTURAL RETROFIT PHASE

REVISIONS

DRAWING TITLE

TENTH FLOOR PLAN

SCALE : 1/8"=1'-0"
DATE :
JOB NO : nya.05121.00
SHEET NO.

S2.10

SCOPING DOCUMENTS 100% SUBMISSION AUGUST 2010

X:\2005\05121-Hall of Justice\S\S2-10.dwg LAST PLOTTED ON Tue 07/08/08 - 11:49am

ALL DRAWINGS AND WRITTEN MATERIAL APPEARING HEREIN CONSTITUTE THE ORIGINAL AND UNPUBLISHED WORK OF THE ARCHITECT AND THE SAME MAY NOT BE DUPLICATED, USED OR DISCLOSED WITHOUT THE WRITTEN CONSENT OF THE ARCHITECT. COPYRIGHT: NADEL ARCHITECTS INC. ALL RIGHTS RESERVED.

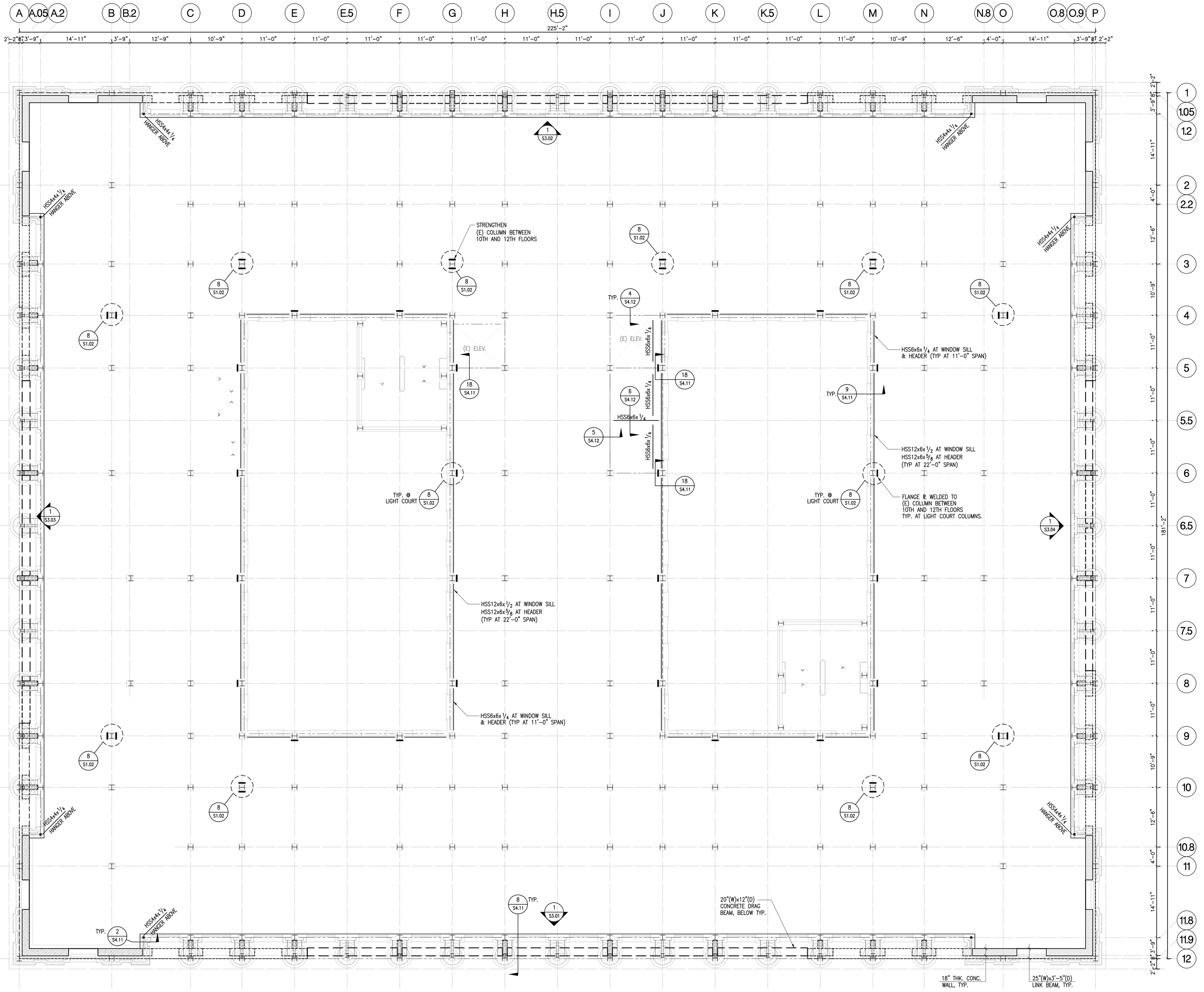

LEGEND:

- D3 = METAL DECK INFILL SLAB PER 10/S1.03
- = BUILT-UP SLAB PER 7/S1.01
- = SMALL OPENING INFILL PER 8/S1.01
- = (E) STEEL BEAM
- = STEEL BEAM
- = FIBER WRAP AT URM WALL
- = CONCRETE WALL
- = CONCRETE WALL BELOW
- = DRAG BEAM BELOW
- D1 = DECK TYPE SEE 10/S1.03

ELEVENTH FLOOR PLAN | SCALE: 1/8"=1'-0" | 1

NADEL Architects Inc.
1990 So. Bundy Dr.
Fourth Floor
Los Angeles, CA 90025
T. 310.826.2100
F. 310.826.0182
www.nadelarc.com

CONSULTANT

NABIH YOUSSEF & ASSOCIATES
Structural Engineers
800 Wilshire Boulevard, Suite 200
Los Angeles, California 90017
TEL: (213) 362-0707
FAX: (213) 896-0018
REGISTERED PROFESSIONAL ENGINEER NABIH F. G. YOUSSEF No. 2026 Exp. 9/30/09 STRUCTURAL STATE OF CALIFORNIA

COUNTY OF LOS ANGELES
THE HALL OF JUSTICE
STRUCTURAL RETROFIT PHASE

REVISIONS

DRAWING TITLE

ELEVENTH FLOOR PLAN

SCALE : 1/8"=1'-0"
DATE :
JOB NO : nya.05121.00
SHEET NO.
S2.11

SCOPING DOCUMENTS 100% SUBMISSION AUGUST 2010

X:\2005\05121-Hall of Justice\S\S2-11.dwg LAST PLOTTED ON Tue 07/08/08 - 11:50am

ALL DRAWINGS AND WRITTEN MATERIAL APPEARING HEREIN CONSTITUTE THE ORIGINAL AND UNPUBLISHED WORK OF THE ARCHITECT AND THE SAME MAY NOT BE DUPLICATED, USED OR DISCLOSED WITHOUT THE WRITTEN CONSENT OF THE ARCHITECT. COPYRIGHT: NADEL ARCHITECTS INC. ALL RIGHTS RESERVED.

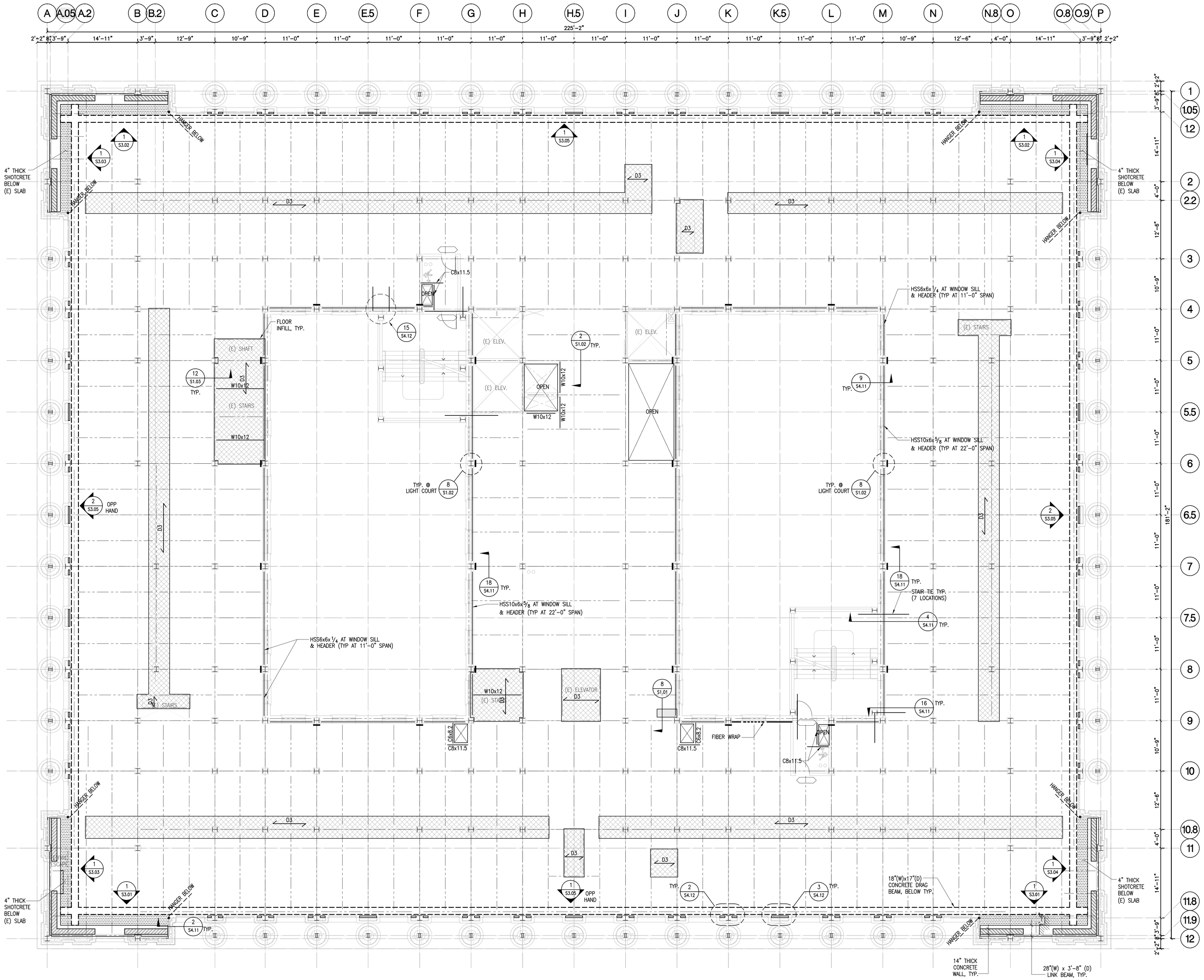

LEGEND:

- D3 = METAL DECK INFILL SLAB PER 10/S1.03
- = BUILT-UP SLAB PER 7/S1.01
- = SMALL OPENING INFILL PER 8/S1.01
- = (E) STEEL BEAM
- = STEEL BEAM
- = FIBER WRAP AT URM WALL
- = CONCRETE WALL
- = CONCRETE WALL BELOW
- = DRAG BEAM BELOW
- D1 = DECK TYPE SEE 10/S1.03

NADEL Architects Inc.

1990 So. Bundy Dr.
Fourth Floor
Los Angeles, CA 90025

T. 310.826.2100
F. 310.826.0182

www.nadelarc.com

CONSULTANT

NABIH YOUSSEF & ASSOCIATES
Structural Engineers
800 Wilshire Boulevard, Suite 200
Los Angeles, California 90017
TEL: (213) 362-0707
FAX: (213) 688-3018

REGISTERED PROFESSIONAL ENGINEER
NABIH F. G. YOUSSEF
No. 2026
Exp. 9/30/09
STRUCTURAL
STATE OF CALIFORNIA

COUNTY OF LOS ANGELES
THE HALL OF JUSTICE
STRUCTURAL RETROFIT PHASE

REVISIONS

DRAWING TITLE

TWELFTH FLOOR PLAN

SCOPING DOCUMENTS 100% SUBMISSION AUGUST 2010

SCALE : 1/8"=1'-0"
DATE :
JOB NO : nya.05121.00
SHEET NO.
S2.12

TWELFTH FLOOR PLAN SCALE: 1/8"=1'-0" 1

X:\2005\05121-Hall of Justice\S\S2-12.dwg LAST PLOTTED ON Tue 07/08/08 - 11:50am

ALL DRAWINGS AND WRITTEN MATERIAL APPEARING HEREIN CONSTITUTE THE ORIGINAL AND UNPUBLISHED WORK OF THE ARCHITECT AND THE SAME MAY NOT BE DUPLICATED, USED OR DISCLOSED WITHOUT THE WRITTEN CONSENT OF THE ARCHITECT. COPYRIGHT: NADEL ARCHITECTS INC. ALL RIGHTS RESERVED.

ALL DRAWINGS AND WRITTEN MATERIAL APPEARING HEREIN CONSTITUTE THE ORIGINAL AND UNPUBLISHED WORK OF THE ARCHITECT AND THE SAME MAY NOT BE DUPLICATED, USED OR DISCLOSED WITHOUT THE WRITTEN CONSENT OF THE ARCHITECT. COPYRIGHT: NADEL ARCHITECTS INC. ALL RIGHTS RESERVED.

X:\2005\05121-HAll of Justice\S\S2-13.dwg LAST PLOTTED ON Tue 07/28/09 - 11:50am

THIRTEENTH FLOOR PLAN

SCALE: 1/8"=1'-0" | 1

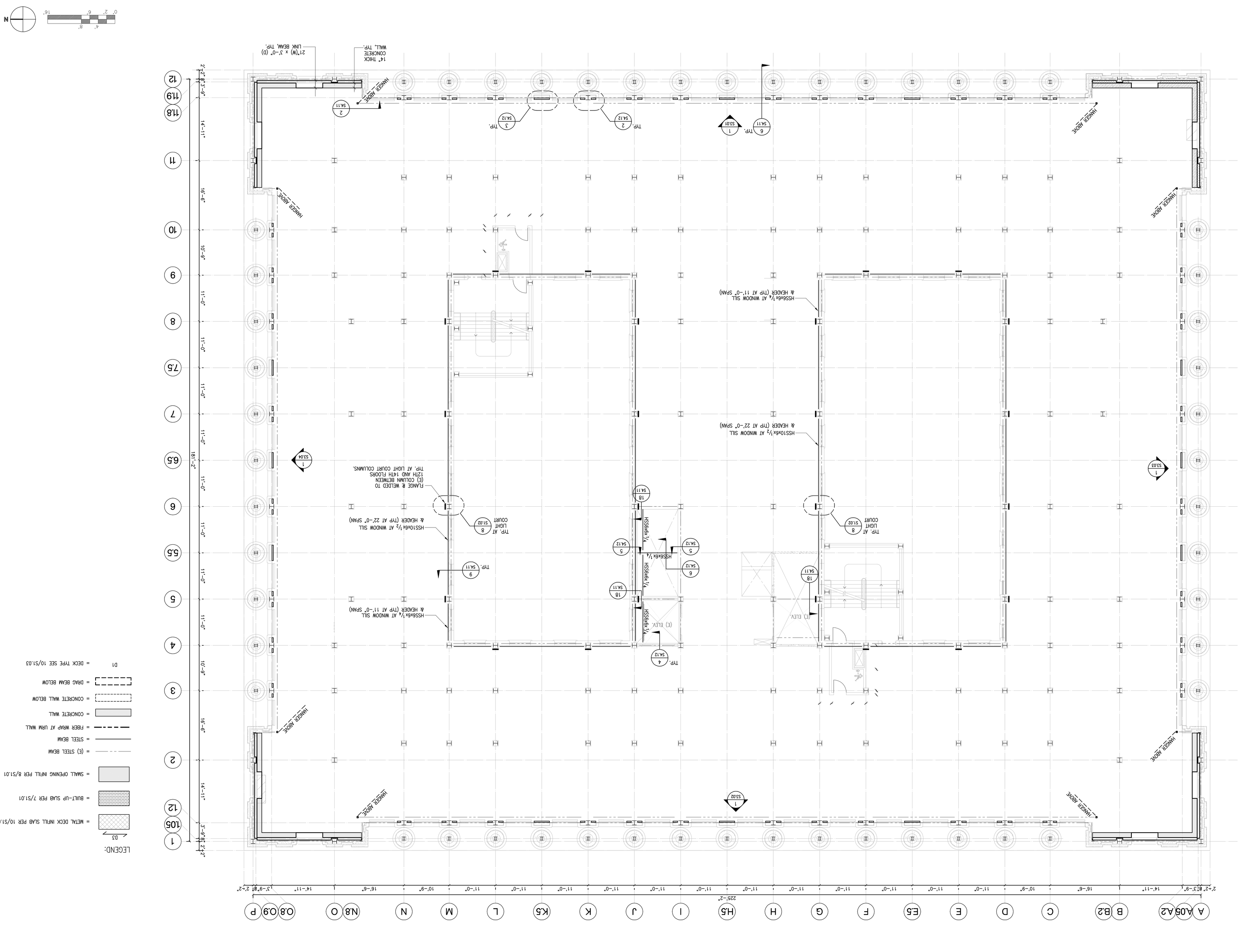

LEGEND:

- D3 = METAL DECK INFILL SLAB PER 10/S1.03
- = BUILT-UP SLAB PER 7/S1.01
- = SMALL OPENING INFILL PER 8/S1.01
- = (E) STEEL BEAM
- = STEEL BEAM
- = FIBER WRAP AT URM WALL
- = CONCRETE WALL
- = CONCRETE WALL BELOW
- = DRAG BEAM BELOW
- D1 = DECK TYPE SEE 10/S1.03

NADEL
Architects Inc.
1990 So. Bundy Dr.
Fourth Floor
Los Angeles, CA 90025
T. 310.826.2100
F. 310.826.0182
www.nadelarc.com

CONSULTANT

NABIH YOUSSEF & ASSOCIATES
Structural Engineers
800 Wilshire Boulevard, Suite 200
Los Angeles, California 90017
TEL: (213) 362-0900
FAX: (213) 896-0010

REGISTERED PROFESSIONAL ENGINEER
NABIH F. G. YOUSSEF
No. 2026
Exp. 9/30/09
STATE OF CALIFORNIA
STRUCTURAL

REVISIONS

1	
2	
3	
4	
5	
6	
7	

DRAWING TITLE

THIRTEENTH FLOOR PLAN

SCOPING DOCUMENTS 100% SUBMISSION AUGUST 2010

SCALE : 1/8"=1'-0"
DATE :
JOB NO : nya.0512100

SHEET NO.

S2.13

COUNTY OF LOS ANGELES
THE HALL OF JUSTICE
STRUCTURAL RETROFIT PHASE

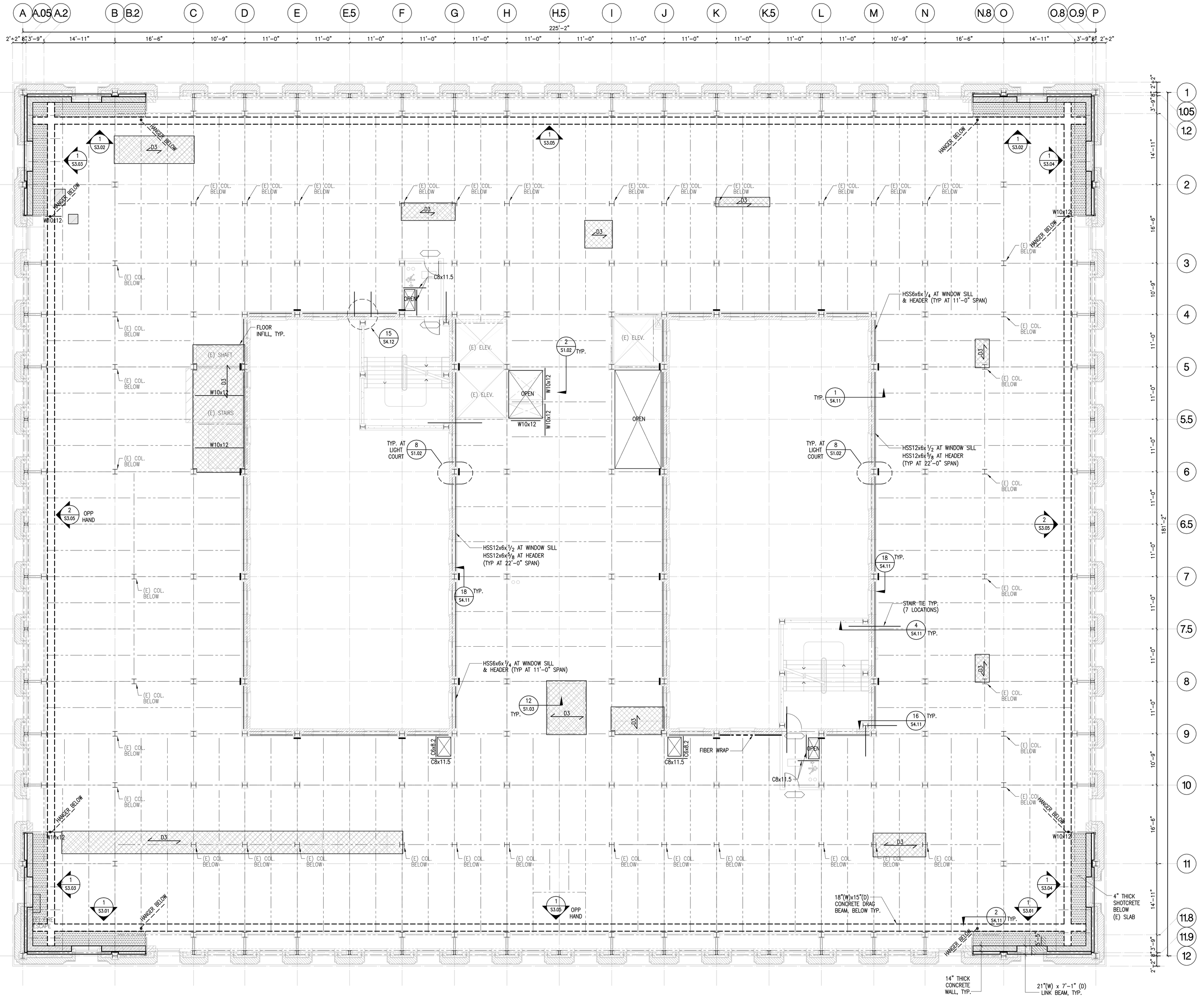

LEGEND:

- D3 = METAL DECK INFILL SLAB PER 10/S1.03
- = BUILT-UP SLAB PER 7/S1.01
- = SMALL OPENING INFILL PER 8/S1.01
- = (E) STEEL BEAM
- = STEEL BEAM
- = FIBER WRAP AT URM WALL
- = CONCRETE WALL
- = CONCRETE WALL BELOW
- = DRAG BEAM BELOW
- D1 = DECK TYPE SEE 10/S1.03

NADEL Architects Inc.

1990 So. Bundy Dr.
Fourth Floor
Los Angeles, CA 90025

T. 310.826.2100
F. 310.826.0182

www.nadelarc.com

CONSULTANT

NABIH YOUSSEF & ASSOCIATES
Structural Engineers
800 Wilshire Boulevard, Suite 200
Los Angeles, California 90017
TEL: (213) 362-0707
FAX: (213) 955-3018

REGISTERED PROFESSIONAL ENGINEER
NABIH F. G. YOUSSEF
No. 2026
Exp. 9/30/09
STRUCTURAL
STATE OF CALIFORNIA

COUNTY OF LOS ANGELES

THE HALL OF JUSTICE

STRUCTURAL RETROFIT PHASE

REVISIONS

1	
2	
3	
4	
5	
6	

DRAWING TITLE

FOURTEENTH FLOOR PLAN

SCOPING DOCUMENTS 100% SUBMISSION AUGUST 2010

SCALE : 1/8"=1'-0"
DATE :
JOB NO : nya.05121.00
SHEET NO.

S2.14

FOURTEENTH FLOOR PLAN | SCALE: 1/8"=1'-0" | 1

X:\2005\05121-Hall of Justice\S\S2-14.dwg LAST PLOTTED ON Tue 07/08/08 - 11:50am

ALL DRAWINGS AND WRITTEN MATERIAL APPEARING HEREIN CONSTITUTE THE ORIGINAL AND UNPUBLISHED WORK OF THE ARCHITECT AND THE SAME MAY NOT BE DUPLICATED, USED OR DISCLOSED WITHOUT THE WRITTEN CONSENT OF THE ARCHITECT. COPYRIGHT: NADEL ARCHITECTS INC. ALL RIGHTS RESERVED.

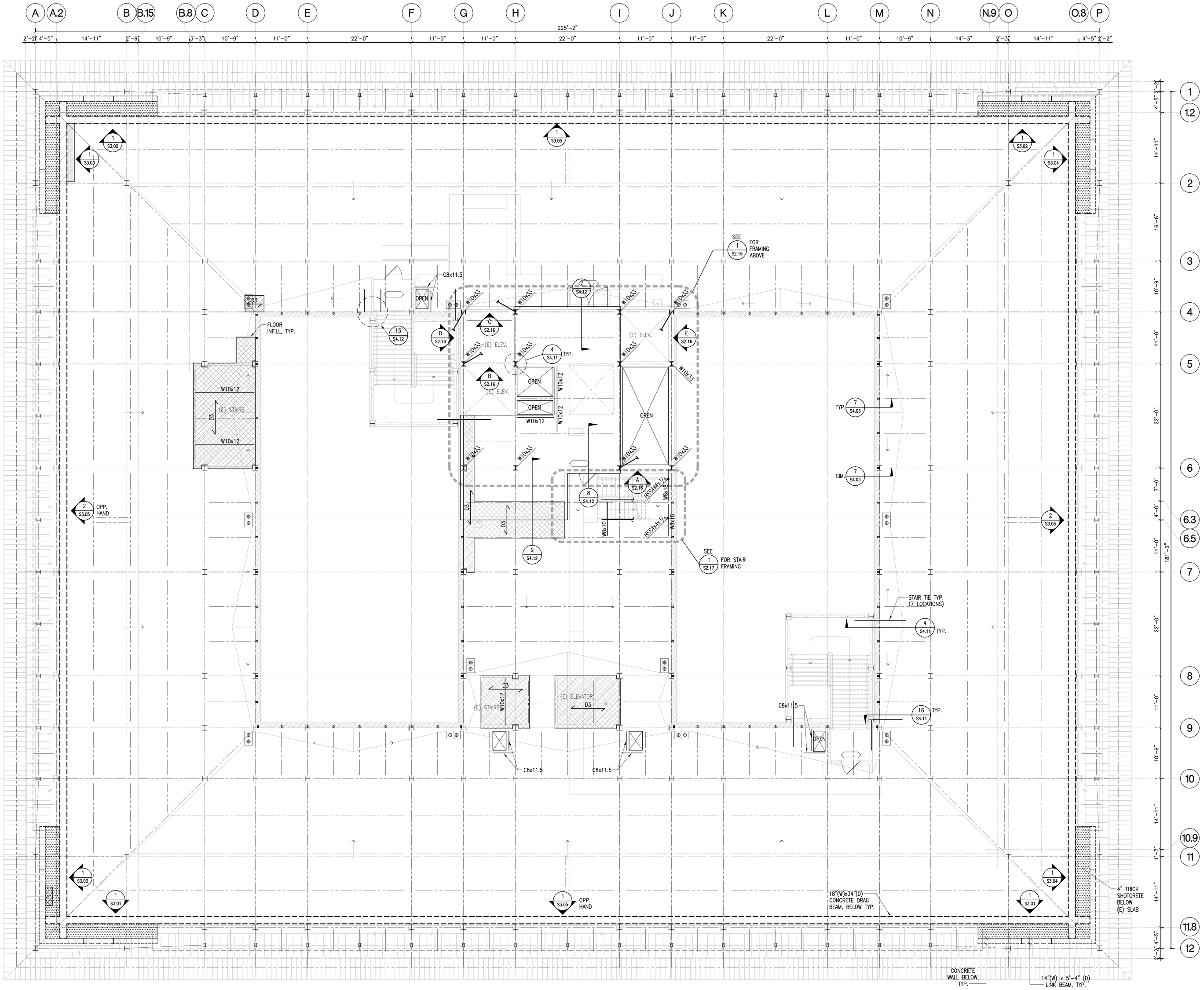

LEGEND:

- D3 = METAL DECK INFILL SLAB PER 10/S1.03
- = BUILT-UP SLAB PER 7/S1.01
- = SMALL OPENING INFILL PER 8/S1.01
- = (E) STEEL BEAM
- = STEEL BEAM
- = FIBER WRAP AT URM WALL
- = CONCRETE WALL
- = CONCRETE WALL BELOW
- = DRAG BEAM BELOW
- D1 = DECK TYPE SEE 10/S1.03

PENTHOUSE FLOOR PLAN

SCALE: 1/8"=1'-0"

1

NADEL Architects Inc.

1990 So. Bundy Dr.
Fourth Floor
Los Angeles, CA 90025

T. 310.826.2100
F. 310.826.0182

www.nadelarc.com

CONSULTANT

NABIH YOUSSEF & ASSOCIATES
Structural Engineers
800 Wilshire Boulevard, Suite 200
Los Angeles, California 90017
TEL: (213) 362-0707
FAX: (213) 688-3018

REGISTERED PROFESSIONAL ENGINEER
NABIH F. G. YOUSSEF
No. 2026
Exp. 9/30/09
STRUCTURAL
STATE OF CALIFORNIA

COUNTY OF LOS ANGELES

THE HALL OF JUSTICE

STRUCTURAL RETROFIT PHASE

REVISIONS

DRAWING TITLE

PENTHOUSE FLOOR PLAN

SCOPING DOCUMENTS 100% SUBMISSION AUGUST 2010

SCALE : 1/8"=1'-0"

DATE :

JOB NO : nya.05121.00

SHEET NO.

S2.15

X:\2005\05121-Hall of Justice\S\S2-15.dwg LAST PLOTTED ON Tue 07/08/08 - 11:50am

ALL DRAWINGS AND WRITTEN MATERIAL APPEARING HEREIN CONSTITUTE THE ORIGINAL AND UNPUBLISHED WORK OF THE ARCHITECT AND THE SAME MAY NOT BE DUPLICATED, USED OR DISCLOSED WITHOUT THE WRITTEN CONSENT OF THE ARCHITECT. COPYRIGHT: NADEL ARCHITECTS INC. ALL RIGHTS RESERVED.

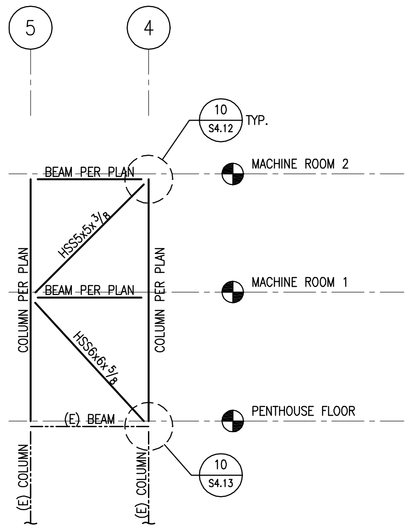

BRACE FRAME ELEVATION AT LINE J | SCALE: 1/8"=1'-0" | E

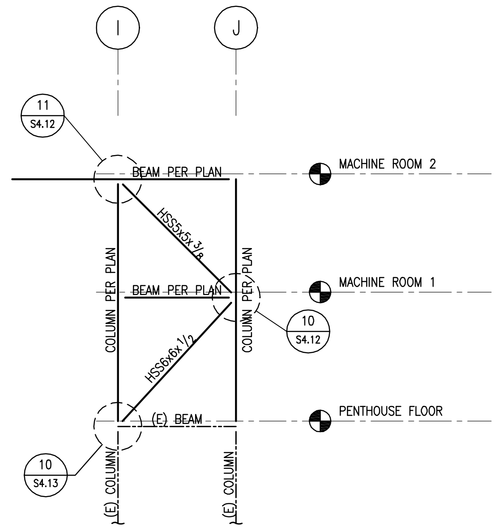

BRACE FRAME ELEVATION AT LINE 6 | SCALE: 1/8"=1'-0" | A

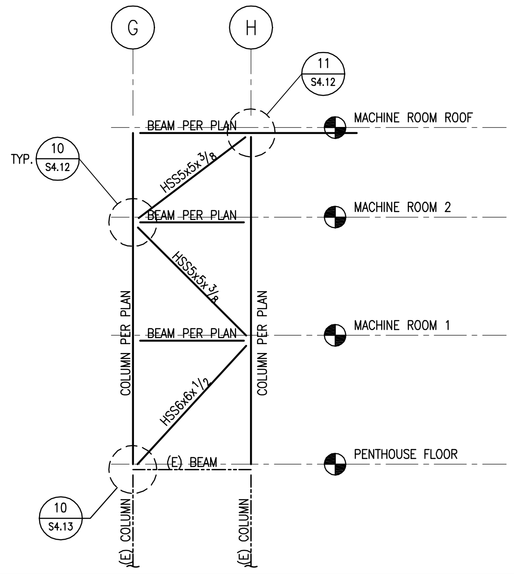

BRACE FRAME ELEVATION AT LINE 5 | SCALE: 1/8"=1'-0" | B

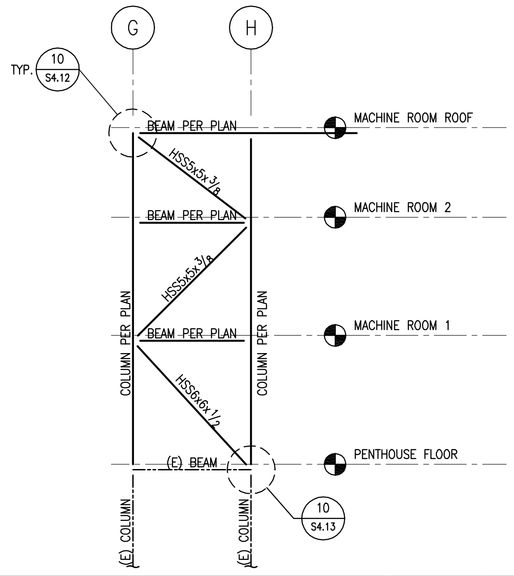

BRACE FRAME ELEVATION AT LINE 4 | SCALE: 1/8"=1'-0" | C

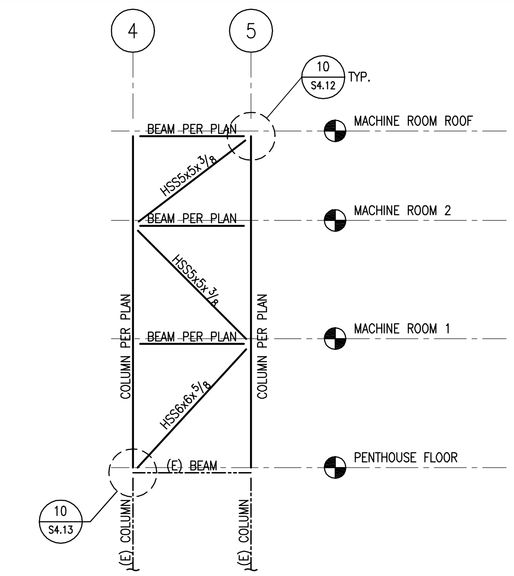

BRACE FRAME ELEVATION AT LINE G | SCALE: 1/8"=1'-0" | D

NOTES:

1. FOR GENERAL NOTES AND TYPICAL DETAILS, SEE SHEETS S1.00 THRU S1.03
2. SEE ARCH. DWGS FOR EDGE OF SLAB DIMENSIONS.
3. VERIFY ALL DIMENSIONS, ELEVATIONS, FLOOR OPENINGS, SLAB DEPRESSIONS, CURBS, ETC. WITH ARCHITECTURAL AND MEP DRAWINGS.
4. NO BEAM PENETRATION IS ALLOWED UNLESS SPECIFICALLY SHOWN ON THE STRUCTURAL DRAWINGS.
5. BEAMS SHALL BE EVENLY SPACED WITHIN A BAY, U.N.O.
6. ALL STEEL MEMBERS WITH METAL DECK AND CONCRETE FILL SHALL HAVE A MINIMUM OF ONE 3/4"ø SHEAR STUD AT 12" O.C. U.N.O.
7. TOP OF STEEL ELEVATION SHALL BE SET BASED ON TOP OF STRUCTURAL CONCRETE ELEVATION, CONCRETE FILL THICKNESS AND DEPTH OF METAL DECKING, U.N.O. SEE ARCHITECTURAL DRAWINGS FOR ROOF SLOPES.
8. HOT DIP GALVANIZE ALL STEEL PERMANENTLY EXPOSED TO WEATHER.
9. CONTRACTOR TO COORDINATE PRECISE ROOF FRAMING AT MECHANICAL EQUIPMENT WITH EQUIPMENT DATA SHEETS.

SYMBOLS AND NOTATIONS

- INDICATES CANTILEVER MOMENT CONNECTION, SEE 9, 10/S1.02
- INDICATES DRAG CONNECTION SEE 14/S1.02
- INDICATES CHANGE IN ELEVATION
- D1 — INDICATES STEEL DECK TYPE. SEE SCHEDULE 10/S1.03
  INDICATES STEEL DECK DIRECTION
  ( ) INDICATES NUMBER OF 3/4"ø SHEAR STUDS EQUALLY SPACED IN SPAN / ZONE. ALLOW FOR A MINIMUM OF 1 STUD PER FOOT FOR ALL BEAMS WHERE NOT NOTED, SEE 1/S1.03
- INDICATES ANGLE BRACE, SEE 11/S1.02
  LOWER END OF BRACE

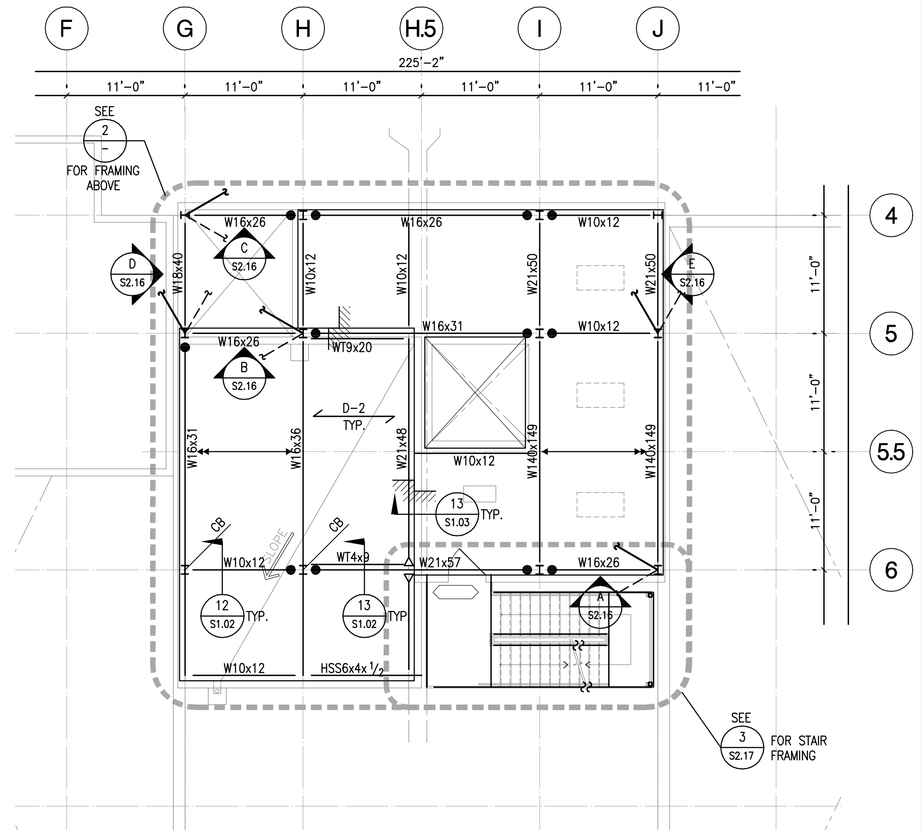

MACHINE ROOM 1 FRAMING PLAN | SCALE: 1/8"=1'-0" | 1

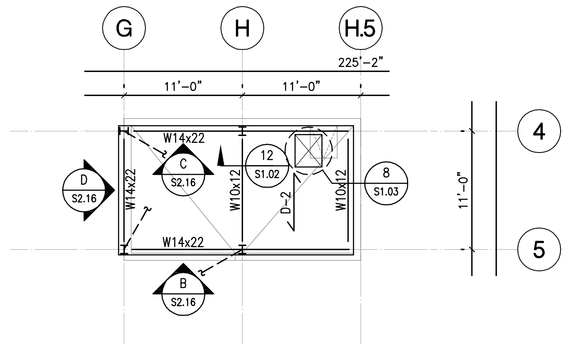

NOTE:

SEE 1/-S2.16 FOR FRAMING NOTES AND SYMBOLS

MACHINE ROOM ROOF FRAMING PLAN | SCALE: 1/8"=1'-0" | 3

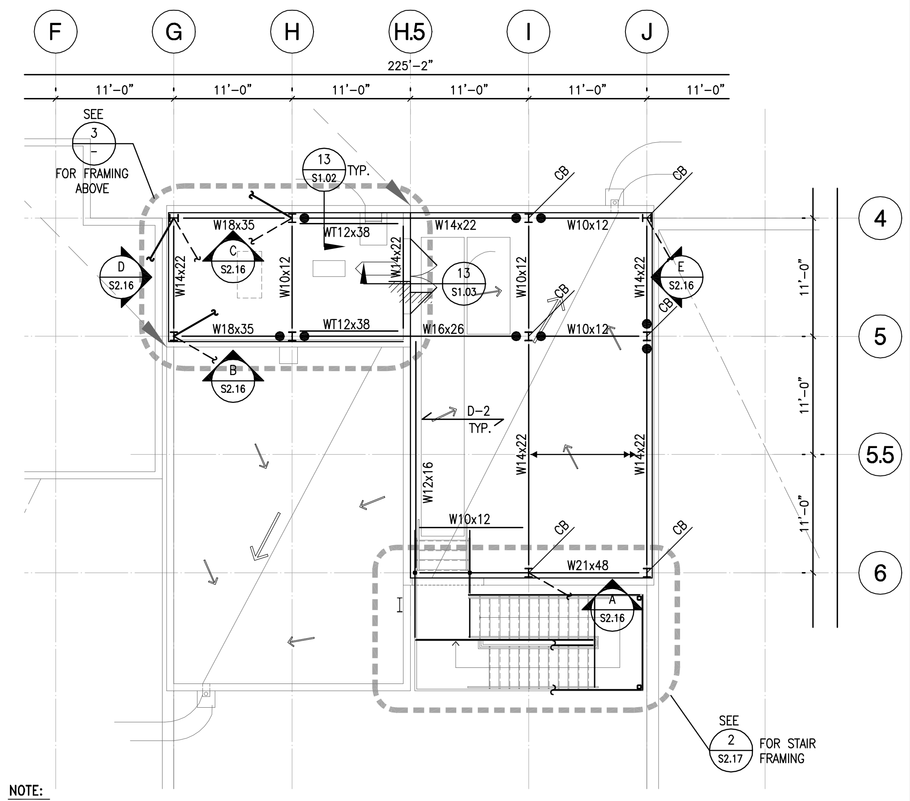

NOTE:

SEE 1/-S2.16 FOR FRAMING NOTES AND SYMBOLS

MACHINE ROOM 2 FRAMING PLAN | SCALE: 1/8"=1'-0" | 2

NADEL Architects Inc.
1990 So. Bundy Dr.
Fourth Floor
Los Angeles, CA 90025
T. 310.826.2100
F. 310.826.0182
www.nadelarc.com

CONSULTANT

NABIH YOUSSEF & ASSOCIATES
Structural Engineers
800 Wilshire Boulevard, Suite 200
Los Angeles, California 90017
TEL: (213) 362-0707
FAX: (213) 362-3018

REGISTERED PROFESSIONAL ENGINEER
NABIH F. G. YOUSSEF
No. 2026
Exp. 9/30/09
STRUCTURAL
STATE OF CALIFORNIA

COUNTY OF LOS ANGELES
THE HALL OF JUSTICE
STRUCTURAL RETROFIT PHASE

REVISIONS

1	
2	
3	
4	
5	
6	

DRAWING TITLE

ELEV. MACHINE ROOM FRAMING PLANS AND ELEVATIONS

AUGUST 2010
100% SUBMISSION
SCOPING DOCUMENTS

SCALE : 1/8"=1'-0"
DATE :
JOB NO : nya.05121.00
SHEET NO.

S2.16

X:\2005\05121-Hall of Justice\S\S2-16.dwg LAST PLOTTED ON Tue 07/08/08 - 11:50am

ALL DRAWINGS AND WRITTEN MATERIAL APPEARING HEREIN CONSTITUTE THE ORIGINAL AND UNPUBLISHED WORK OF THE ARCHITECT AND THE SAME MAY NOT BE DUPLICATED, USED OR DISCLOSED WITHOUT THE WRITTEN CONSENT OF THE ARCHITECT. COPYRIGHT: NADEL ARCHITECTS INC. ALL RIGHTS RESERVED.

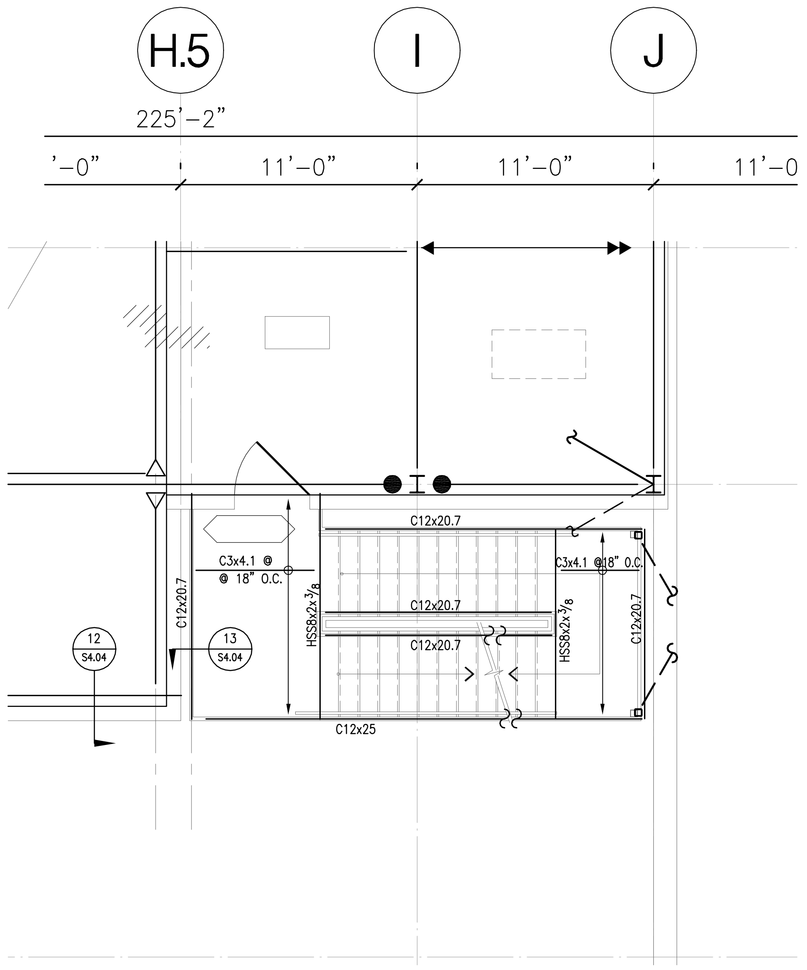

PARTIAL STAIR PLAN @ MACHINE ROOM 1 | SCALE: 1/4"=1'-0" | 3

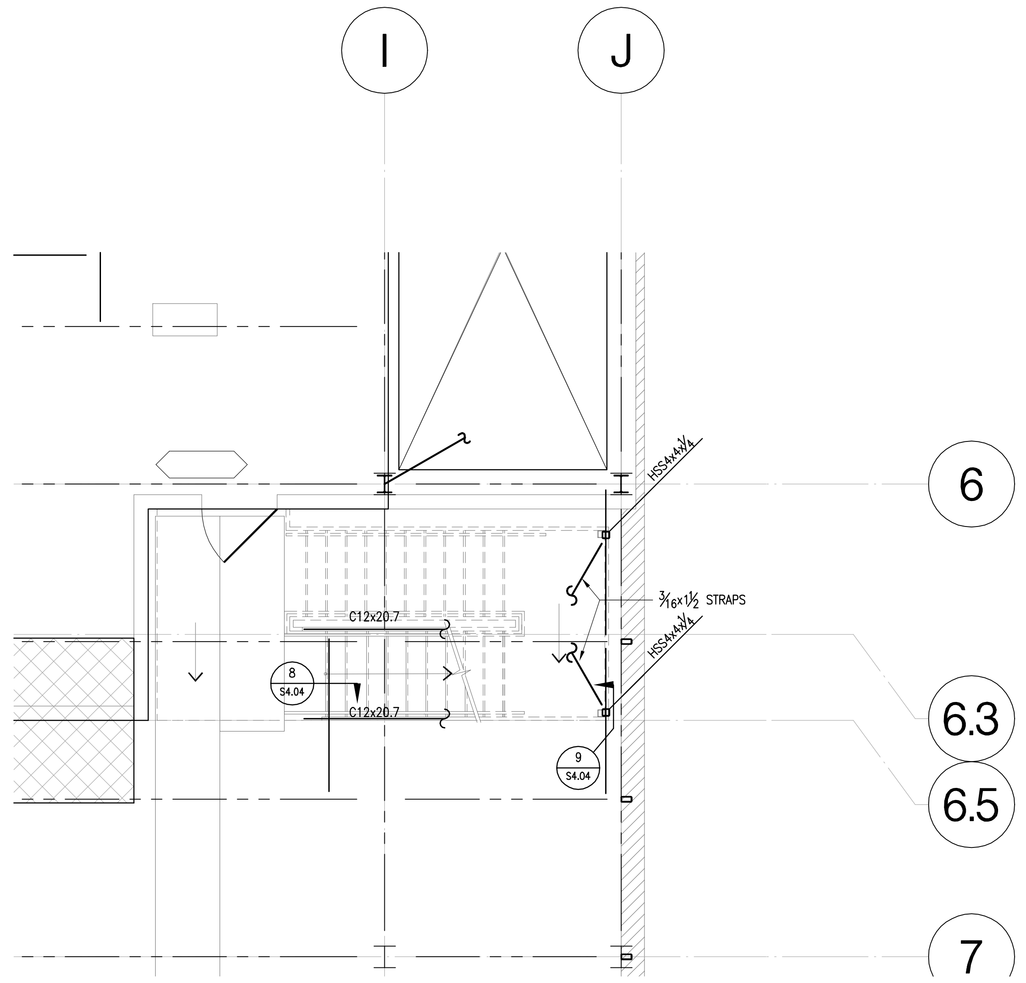

PARTIAL STAIR PLAN @ ROOF | SCALE: 1/4"=1'-0" | 1

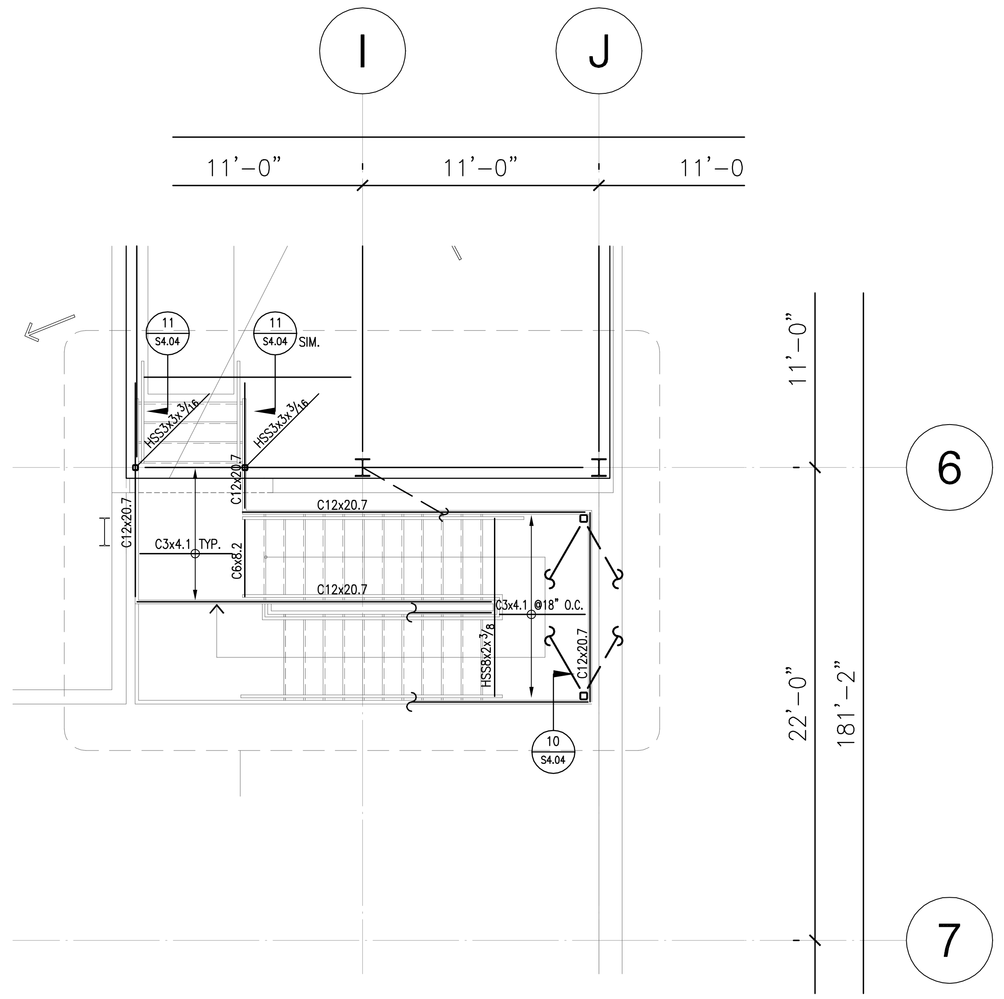

PARTIAL STAIR PLAN @ MACHINE ROOM 2 | SCALE: 1/4"=1'-0" | 2

NADEL
Architects Inc.

1990 So. Bundy Dr.
Fourth Floor
Los Angeles, CA 90025

T. 310.826.2100
F. 310.826.0182

www.nadelarc.com

CONSULTANT

NABIH YOUSSEF & ASSOCIATES
Structural Engineers
800 Wilshire Boulevard, Suite 200
Los Angeles, California 90017
TEL: (213) 362-0707
FAX: (213) 896-0018

REGISTERED PROFESSIONAL ENGINEER
NABIH F. G. YOUSSEF
No. 2026
Exp. 9/30/09
STRUCTURAL
STATE OF CALIFORNIA

COUNTY OF LOS ANGELES
THE HALL OF JUSTICE
STRUCTURAL RETROFIT PHASE

REVISIONS

1	
2	
3	
4	
5	
6	

DRAWING TITLE

ENLARGED STAIR FRAMING PLANS ELEVATIONS

SCALE : 1/8"=1'-0"
DATE :
JOB NO : nya.05121.00
SHEET NO.

S2.17

SCOPING DOCUMENTS 100% SUBMISSION AUGUST 2010

K:\2005\05121-Hall of Justice\S\S2-17.dwg LAST PLOTTED ON Tue 07/08/08 - 11:50am

ALL DRAWINGS AND WRITTEN MATERIAL APPEARING HEREIN CONSTITUTE THE ORIGINAL AND UNPUBLISHED WORK OF THE ARCHITECT AND THE SAME MAY NOT BE DUPLICATED, USED OR DISCLOSED WITHOUT THE WRITTEN CONSENT OF THE ARCHITECT. COPYRIGHT: NADEL ARCHITECTS INC. ALL RIGHTS RESERVED.

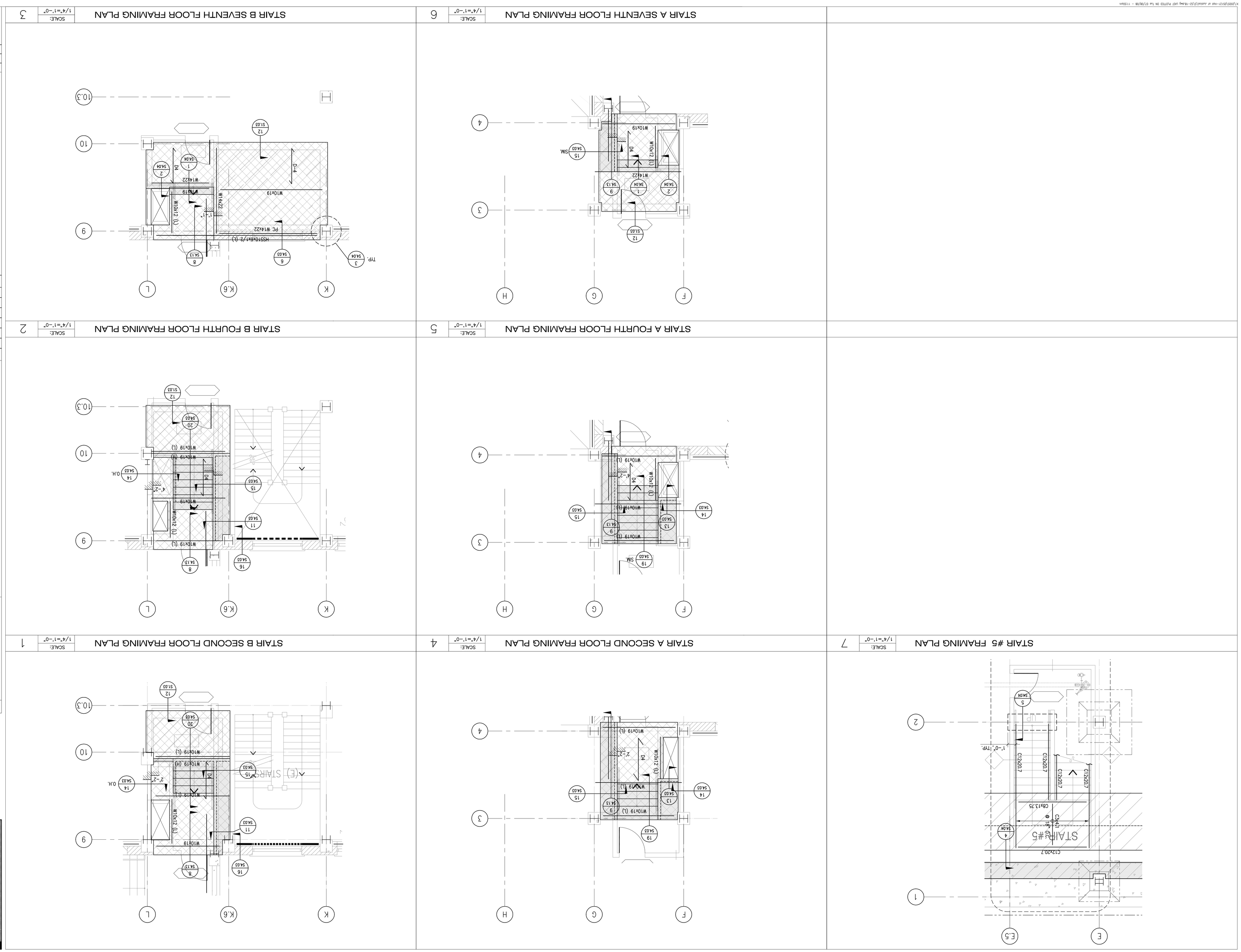

ALL DRAWINGS AND WRITTEN MATERIAL APPEARING HEREIN CONSTITUTE THE ORIGINAL AND UNPUBLISHED WORK OF THE ARCHITECT AND THE SAME MAY NOT BE DUPLICATED, USED OR DISCLOSED WITHOUT THE WRITTEN CONSENT OF THE ARCHITECT. COPYRIGHT: NADEL ARCHITECTS INC. ALL RIGHTS RESERVED.

SCOPING DOCUMENTS 100% SUBMISSION AUGUST 2010

ENLARGED STAIR FRAMING PLANS

SCALE : 1/8"=1'-0"
DATE :
JOB NO : nya.05121.00
SHEET NO.
S2.18

DRAWING TITLE

REVISIONS

COUNTY OF LOS ANGELES
THE HALL OF JUSTICE
STRUCTURAL RETROFIT PHASE

NADEL
Architects Inc.
1990 So. Bundy Dr.
Fourth Floor
Los Angeles, CA 90025
T. 310.826.2100
F. 310.826.0182
www.nadelarc.com

CONSULTANT

NABIH YOUSSEF & ASSOCIATES
Structural Engineers
800 Wilshire Boulevard, Suite 800
Los Angeles, California 90017
TEL (213) 362-0707
FAX (213) 362-0018

REGISTERED PROFESSIONAL ENGINEER
NABIH F. G. YOUSSEF
No. 2026
Exp. 9/30/09
STRUCTURAL
STATE OF CALIFORNIA

ALL DRAWINGS AND WRITTEN MATERIAL APPEARING HEREIN CONSTITUTE THE ORIGINAL AND UNPUBLISHED WORK OF THE ARCHITECT AND THE SAME MAY NOT BE DUPLICATED, USED OR DISCLOSED WITHOUT THE WRITTEN CONSENT OF THE ARCHITECT. COPYRIGHT: NADEL ARCHITECTS INC. ALL RIGHTS RESERVED.

X:\2005\05121-HAR 01 Admin\SS\S3-01.dwg LAST PLOTTED ON Tue 07/08/08 - 1151pm

INTERIOR EAST WALL ELEVATION

SCALE: 1/8"=1'-0"

1

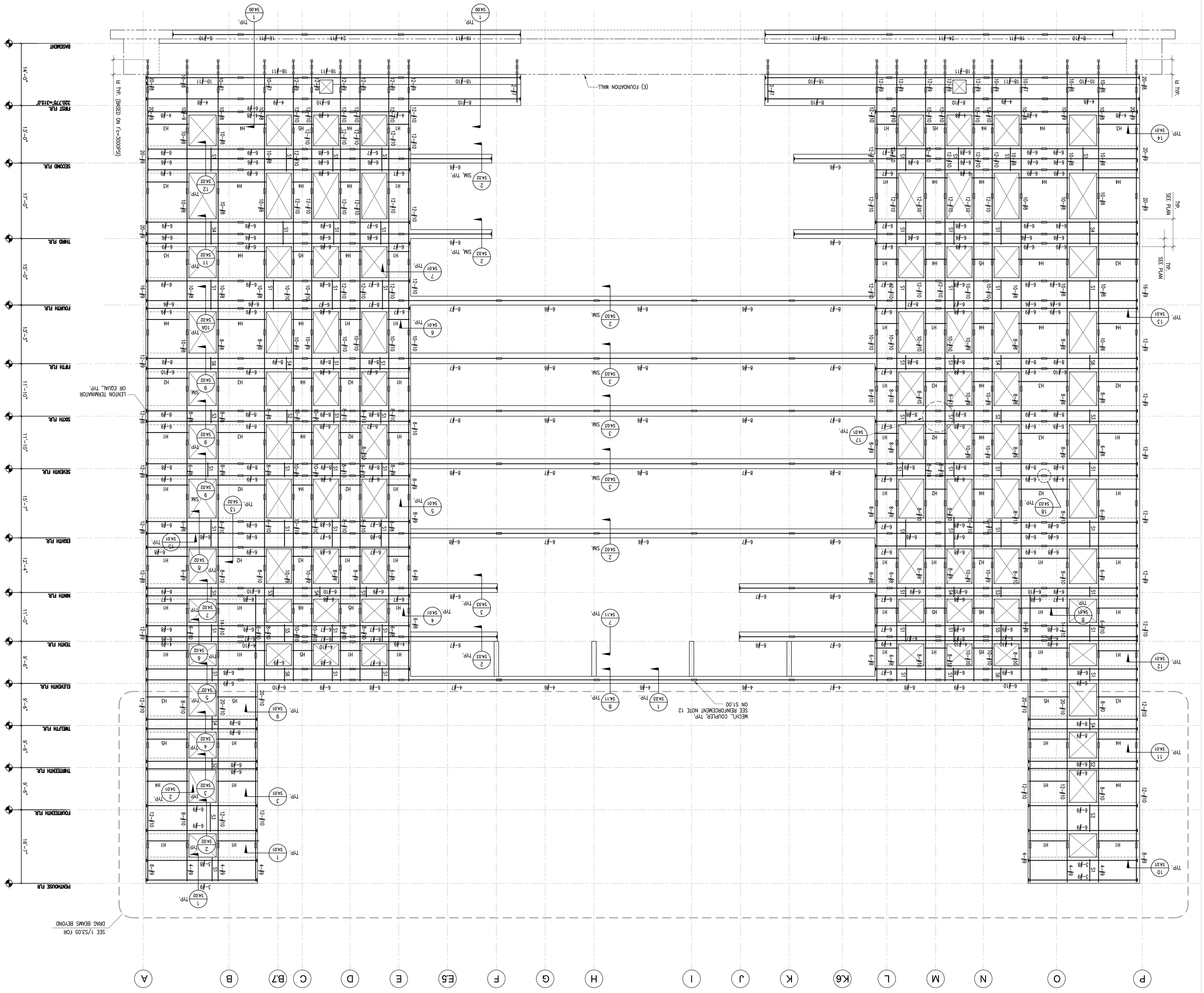

LINK BEAM STIRRUP SCHEDULE	
S1	#5 @ 12" O.C.
S2	#5 @ 10" O.C.
S3	#5 @ 8" O.C.
S4	#5 @ 6" O.C.
S5	#5 @ 5" O.C.
S6	#5 @ 4" O.C.

WALL HORIZONTAL REINF. SCHEDULE	
H1	#5 @ 12" O.C. E.F.
H2	#5 @ 10" O.C. E.F.
H3	#5 @ 8" O.C. E.F.
H4	#6 @ 8" O.C. E.F.
H5	#6 @ 6" O.C. E.F.
H6	#6 @ 4" O.C. E.F.

S3.01

SHEET NO.

JOB NO : nya.05121.00

DATE :

SCALE :

SCOPING DOCUMENTS 100% SUBMISSION AUGUST 2010

INTERIOR EAST WALL ELEV.

DRAWING TITLE

REVISIONS

CONSULTANT

NABIH YOUSSEF & ASSOCIATES
Structural Engineers
900 Wilshire Boulevard, Suite 300
Los Angeles, California 90017
TEL (213) 955-1700
FAX (213) 955-1710

STRUCTURAL ENGINEER
NABIH Y. YOUSSEF
No. 2026
Exp. 9/30/09
STRUCTURAL
STATE OF CALIFORNIA

COUNTY OF LOS ANGELES

THE HALL OF JUSTICE

STRUCTURAL RETROFIT PHASE

NADEL
Architects Inc.
1990 So. Bundy Dr.
Fourth Floor
Los Angeles, CA 90025
T. 310.826.2100
F. 310.826.0182
www.nadelarc.com

ALL DRAWINGS AND WRITTEN MATERIAL APPEARING HEREIN CONSTITUTE THE ORIGINAL AND UNPUBLISHED WORK OF THE ARCHITECT AND THE SAME MAY NOT BE DUPLICATED, USED OR DISCLOSED WITHOUT THE WRITTEN CONSENT OF THE ARCHITECT. COPYRIGHT: NADEL ARCHITECTS INC. ALL RIGHTS RESERVED.

INTERIOR WEST WALL ELEVATION

SCALE: 1/8"=1'-0" | 1

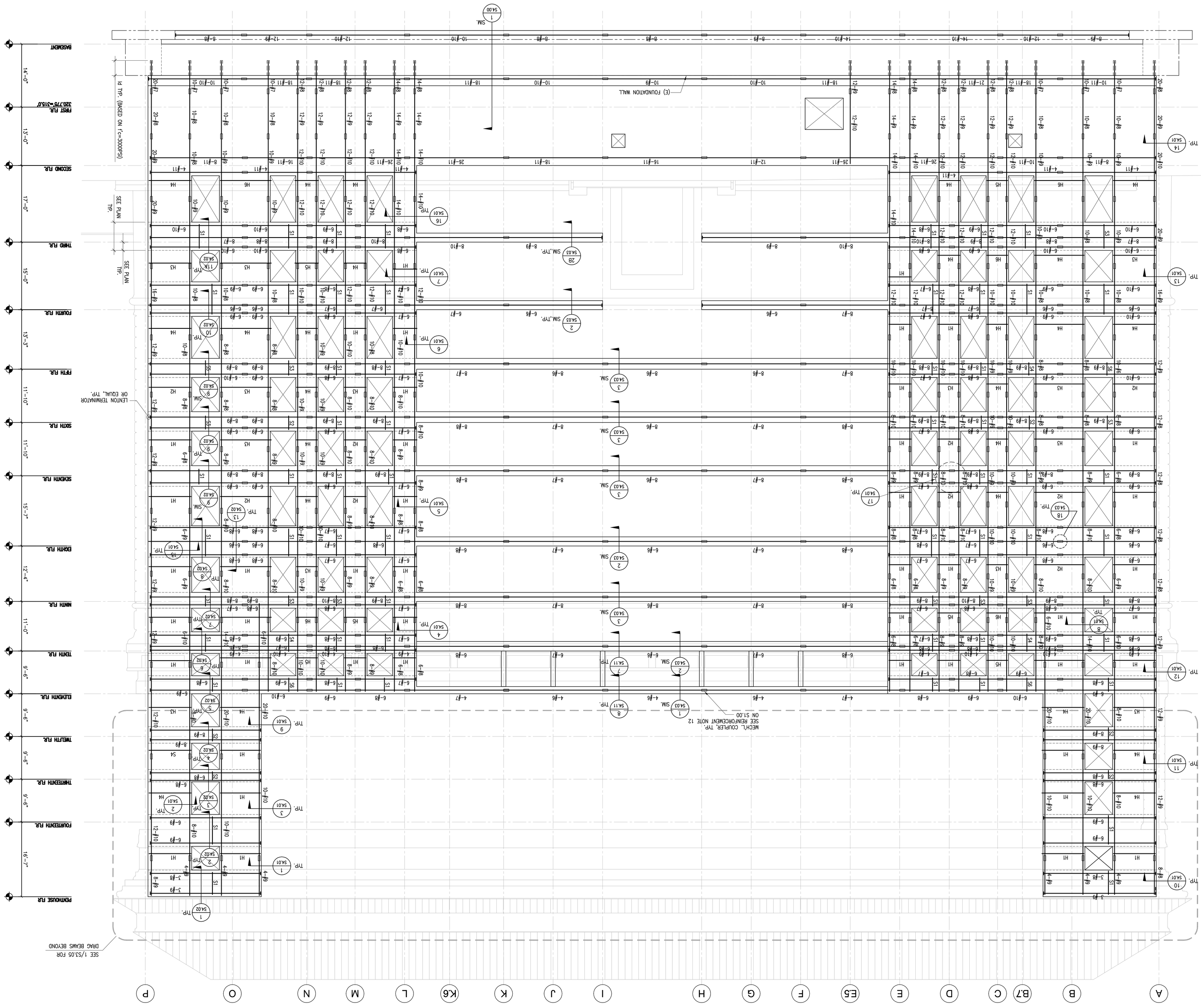

WALL HORIZONTAL REINF. SCHEDULE	
H1	#5 @ 12" O.C. E.F.
H2	#5 @ 10" O.C. E.F.
H3	#6 @ 8" O.C. E.F.
H4	#6 @ 8" O.C. E.F.
H5	#6 @ 6" O.C. E.F.
H6	#6 @ 4" O.C. E.F.

LINK BEAM STIRRUP SCHEDULE	
S1	#5 @ 12" O.C.
S2	#5 @ 10" O.C.
S3	#5 @ 8" O.C.
S4	#5 @ 6" O.C.
S5	#5 @ 5" O.C.
S6	#5 @ 4" O.C.

NADEL Architects Inc.
1990 So. Bundy Dr.
Fourth Floor
Los Angeles, CA 90025
T. 310.826.2100
F. 310.826.0182
www.nadelarc.com

CONSULTANT
NABIH YOUSSEF & ASSOCIATES
Structural Engineers
800 Wilshire Boulevard, Suite 800
Los Angeles, California 90017
TEL (213) 380-4700
FAX (213) 688-9018

REGISTERED PROFESSIONAL ENGINEER
NABIH F. G. YOUSSEF
No. 20026
Exp. 9/30/09
STRUCTURAL
STATE OF CALIFORNIA

REVISIONS

DRAWING TITLE

INTERIOR WEST WALL ELEV.

SCOPING DOCUMENTS 100% SUBMISSION AUGUST 2010

SCALE:
DATE:
JOB NO.: nya.05121100
SHEET NO.: S3.02

COUNTY OF LOS ANGELES

THE HALL OF JUSTICE

STRUCTURAL RETROFIT PHASE

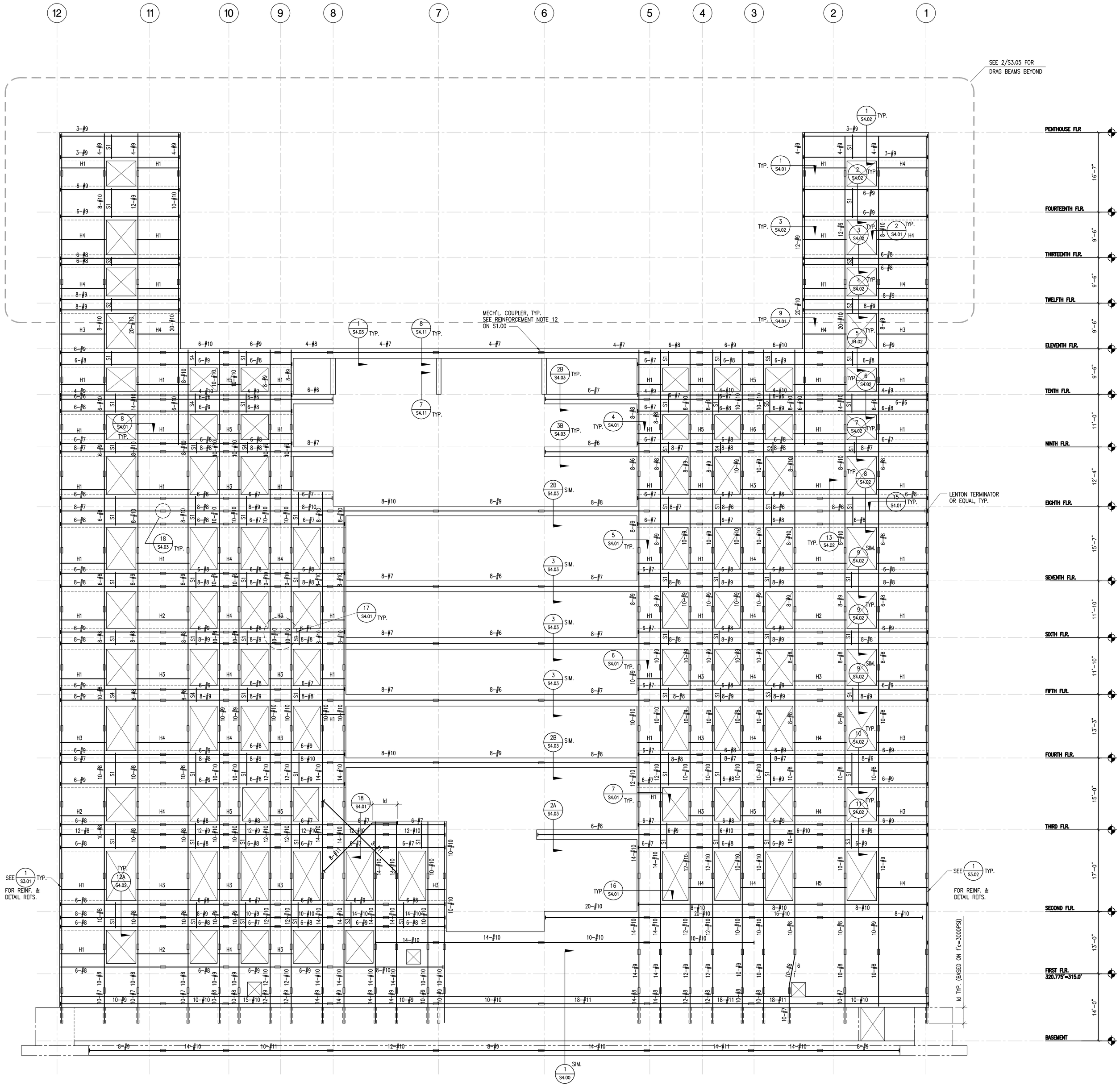

WALL HORIZONTAL REINF. SCHEDULE	
H1	#5 @ 12" O.C. E.F.
H2	#5 @ 10" O.C. E.F.
H3	#5 @ 8" O.C. E.F.
H4	#6 @ 8" O.C. E.F.
H5	#6 @ 6" O.C. E.F.
H6	#6 @ 4" O.C. E.F.

LINK BEAM STIRRUP SCHEDULE	
S1	#5 @ 12" O.C.
S2	#5 @ 10" O.C.
S3	#5 @ 8" O.C.
S4	#5 @ 6" O.C.
S5	#5 @ 5" O.C.
S6	#5 @ 4" O.C.

NADEL Architects Inc.

1990 So. Bundy Dr.
Fourth Floor
Los Angeles, CA 90025

T. 310.826.2100
F. 310.826.0182

www.nadelarc.com

CONSULTANT

NABIH YOUSSEF & ASSOCIATES
Structural Engineers
800 Wilshire Boulevard, Suite 200
Los Angeles, California 90017
TEL: (213) 362-0707
FAX: (213) 688-3018

REGISTERED PROFESSIONAL ENGINEER NABIH F. G. YOUSSEF No. 2026 Exp. 9/30/09 STRUCTURAL STATE OF CALIFORNIA

COUNTY OF LOS ANGELES

THE HALL OF JUSTICE

STRUCTURAL RETROFIT PHASE

REVISIONS

DRAWING TITLE

INTERIOR SOUTH WALL ELEV

SCOPING DOCUMENTS 100% SUBMISSION AUGUST 2010

SCALE :
DATE :
JOB NO : nya.05121.00
SHEET NO.

S3.03

INTERIOR SOUTH WALL ELEVATION

SCALE: 1/8"=1'-0"

1

X:\2005\05121-Hall of Justice\S\S3-03.dwg LAST PLOTTED ON Tue 07/08/08 - 11:51am

ALL DRAWINGS AND WRITTEN MATERIAL APPEARING HEREIN CONSTITUTE THE ORIGINAL AND UNPUBLISHED WORK OF THE ARCHITECT AND THE SAME MAY NOT BE DUPLICATED, USED OR DISCLOSED WITHOUT THE WRITTEN CONSENT OF THE ARCHITECT. COPYRIGHT: NADEL ARCHITECTS INC. ALL RIGHTS RESERVED.

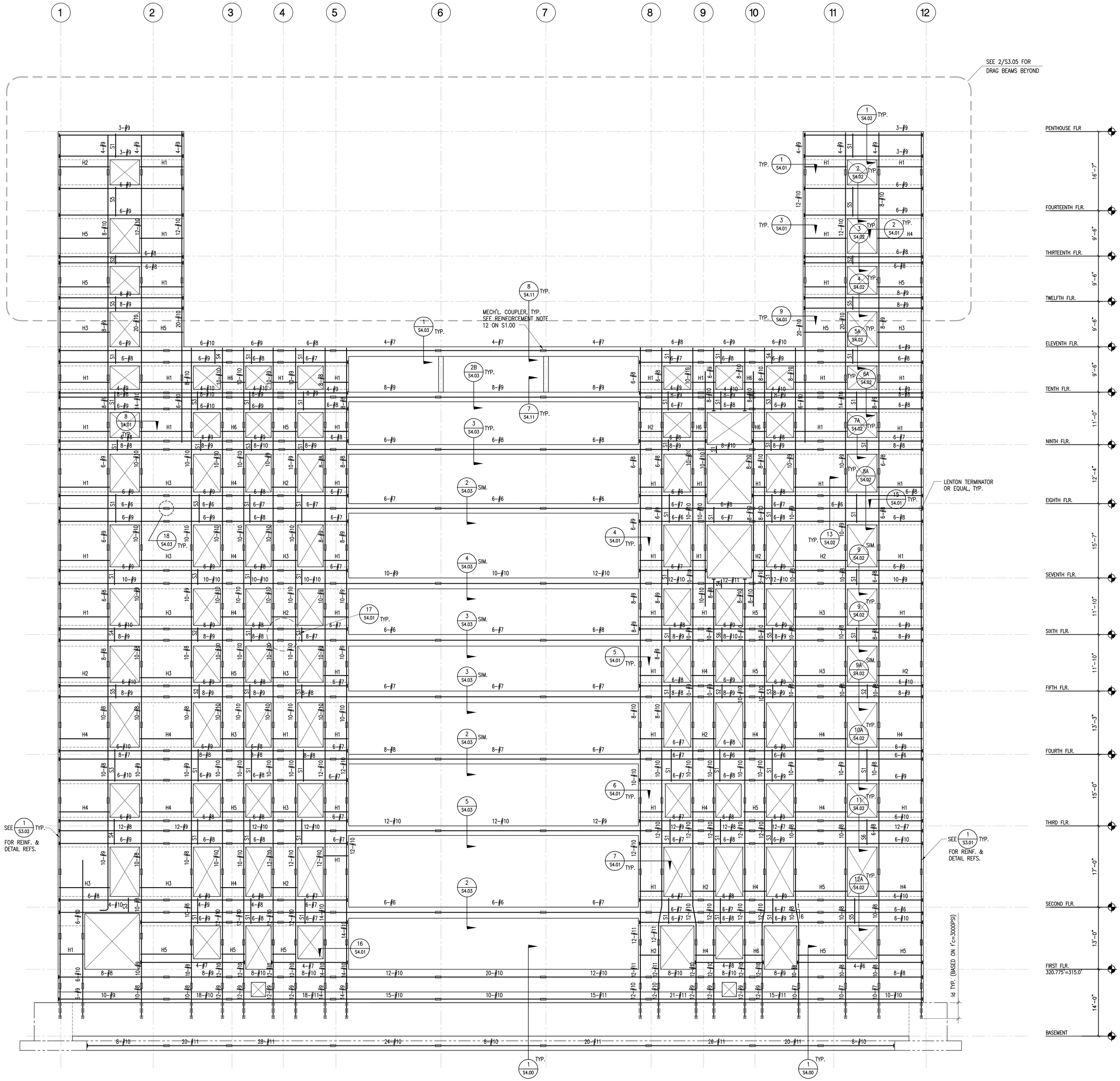

WALL HORIZONTAL REINF. SCHEDULE	
H1	#5 @ 12" O.C. E.F.
H2	#5 @ 10" O.C. E.F.
H3	#5 @ 8" O.C. E.F.
H4	#6 @ 8" O.C. E.F.
H5	#6 @ 6" O.C. E.F.
H6	#6 @ 4" O.C. E.F.

LINK BEAM STIRRUP SCHEDULE	
S1	#5 @ 12" O.C.
S2	#5 @ 10" O.C.
S3	#5 @ 8" O.C.
S4	#5 @ 6" O.C.
S5	#5 @ 5" O.C.
S6	#5 @ 4" O.C.

INTERIOR NORTH WALL ELEVATION

SCALE: 1/8"=1'-0"

1

NADEL Architects Inc.

1990 So. Bundy Dr.
Fourth Floor
Los Angeles, CA 90025

T. 310.826.2100
F. 310.826.0182

www.nadelarc.com

CONSULTANT

NABIH YOUSSEF & ASSOCIATES
Structural Engineers
800 Wilshire Boulevard, Suite 200
Los Angeles, California 90017
TEL: (213) 362-0707
FAX: (213) 688-3018

REGISTERED PROFESSIONAL ENGINEER NABIH F. G. YOUSSEF No. 2026 Exp. 9/30/09 STRUCTURAL STATE OF CALIFORNIA

COUNTY OF LOS ANGELES

THE HALL OF JUSTICE

STRUCTURAL RETROFIT PHASE

REVISIONS

DRAWING TITLE

INTERIOR NORTH WALL ELEV

SCOPING DOCUMENTS 100% SUBMISSION AUGUST 2010

SCALE :
DATE :
JOB NO : nya.05121.00
SHEET NO.

S3.04

X:\2005\05121-Hall of Justice\S\S3-04.dwg LAST PLOTTED ON Tue 07/08/08 - 11:51am

ALL DRAWINGS AND WRITTEN MATERIAL APPEARING HEREIN CONSTITUTE THE ORIGINAL AND UNPUBLISHED WORK OF THE ARCHITECT AND THE SAME MAY NOT BE DUPLICATED, USED OR DISCLOSED WITHOUT THE WRITTEN CONSENT OF THE ARCHITECT. COPYRIGHT: NADEL ARCHITECTS INC. ALL RIGHTS RESERVED.

ALL DRAWINGS AND WRITTEN MATERIAL APPEARING HEREIN CONSTITUTE THE ORIGINAL AND UNPUBLISHED WORK OF THE ARCHITECT AND THE SAME MAY NOT BE DUPLICATED, USED OR DISCLOSED WITHOUT THE WRITTEN CONSENT OF THE ARCHITECT. COPYRIGHT: NADEL ARCHITECTS INC. ALL RIGHTS RESERVED.

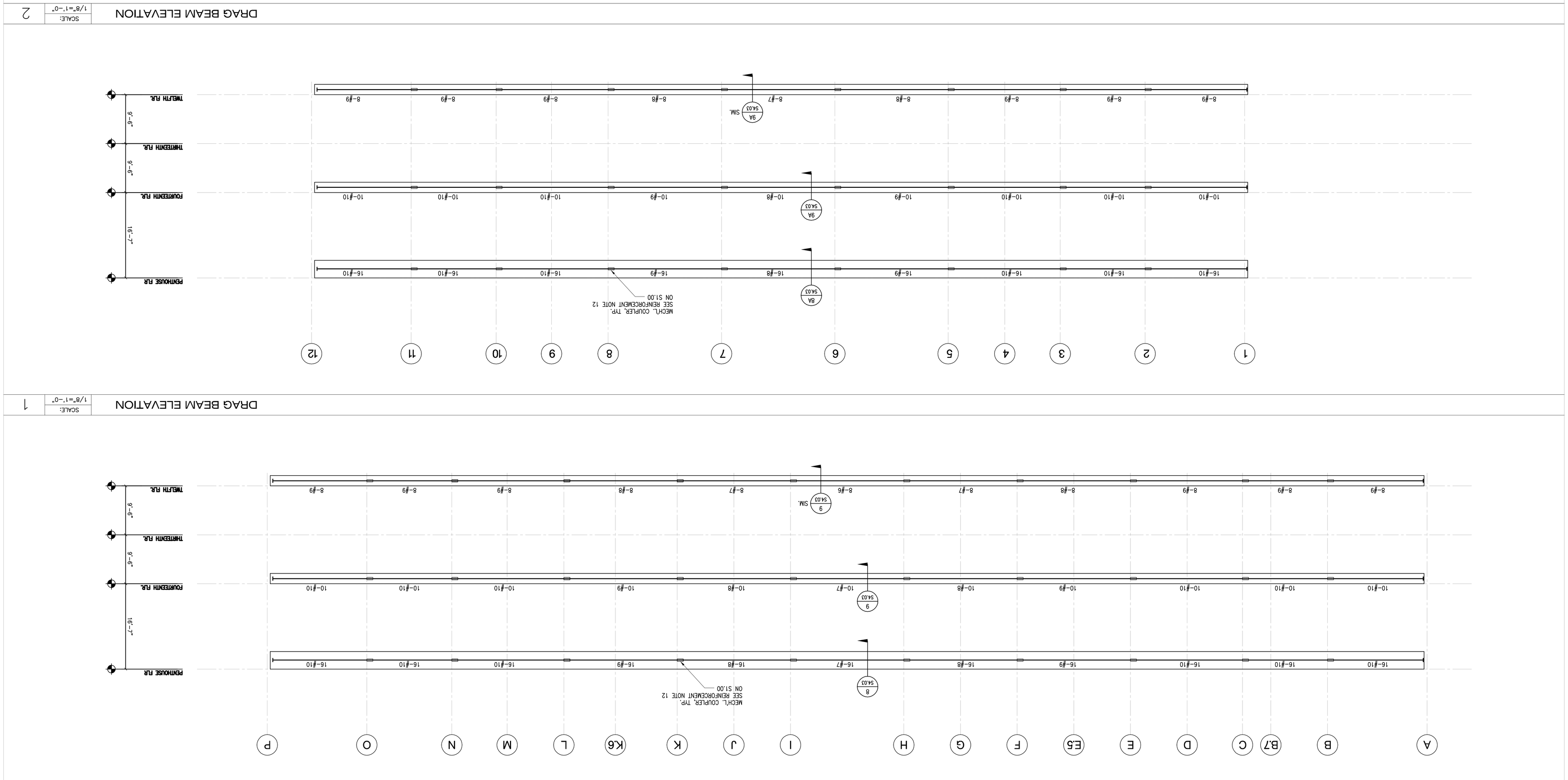

DRAG BEAM ELEV'S.

SCALE :
DATE :
JOB NO : nya.0512100
SHEET NO. **S3.05**

DRAWING TITLE

REVISIONS

COUNTY OF LOS ANGELES
THE HALL OF JUSTICE
STRUCTURAL RETROFIT PHASE

CONSULTANT

NABIH YOUSSEF & ASSOCIATES
Structural Engineers
800 Wilshire Boulevard, Suite 800
Los Angeles, California 90017
TEL: (213) 362-0707
FAX: (213) 362-0018

REGISTERED PROFESSIONAL ENGINEER
NABIH F. G. YOUSSEF
No. 2026
Exp. 9/30/09
STRUCTURAL
STATE OF CALIFORNIA

NADEL
Architects Inc.
1990 So. Bundy Dr.
Fourth Floor
Los Angeles, CA 90025
T. 310.826.2100
F. 310.826.0182
www.nadelarc.com

SCOPING DOCUMENTS 100% SUBMISSION AUGUST 2010

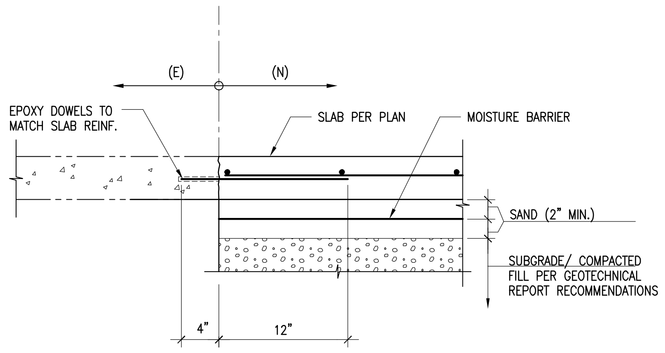

S.O.G. INTERFACE

SCALE: 1"=1'-0"

5 / S4.00

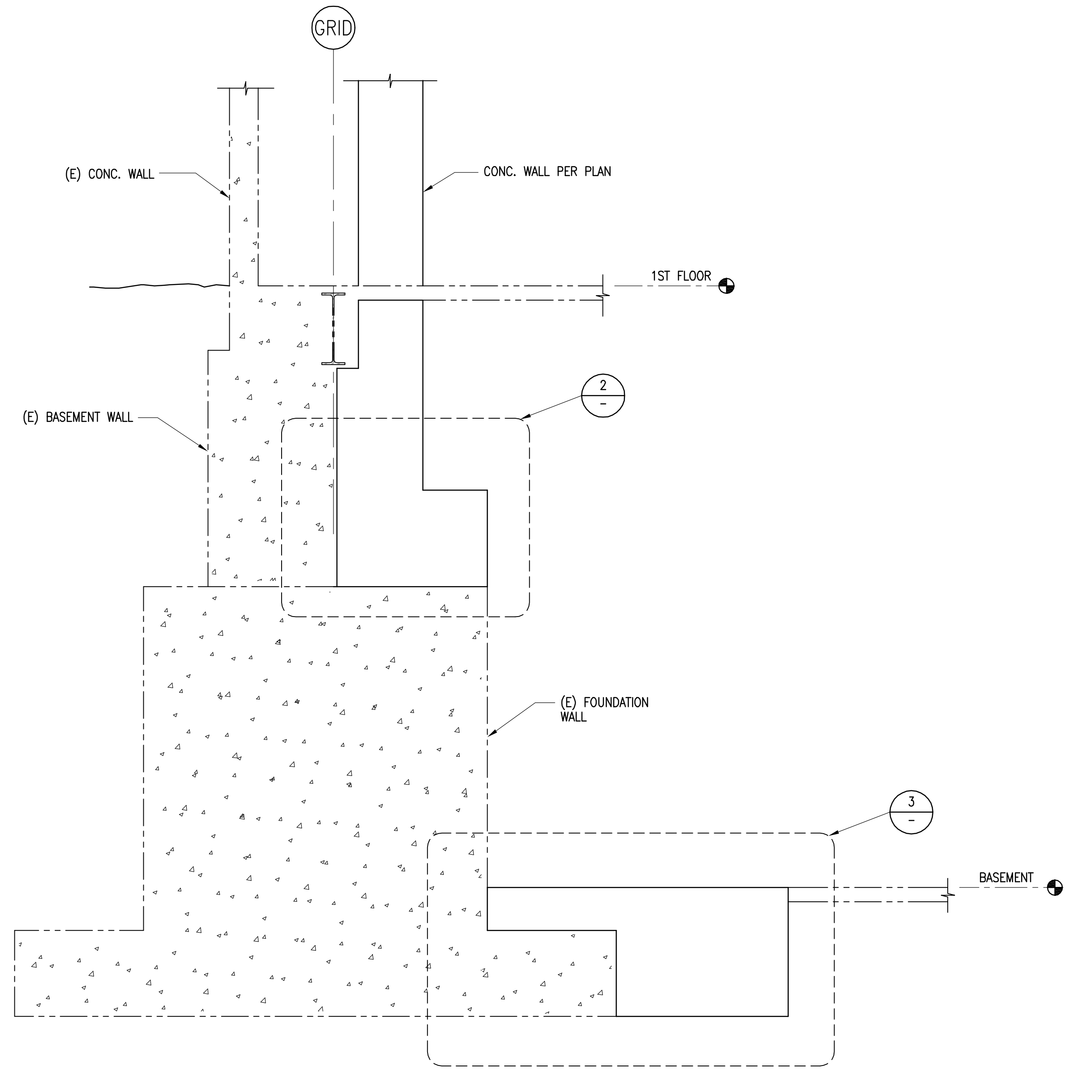

FOUNDATION SECTION

SCALE: NTS

1 / S4.00

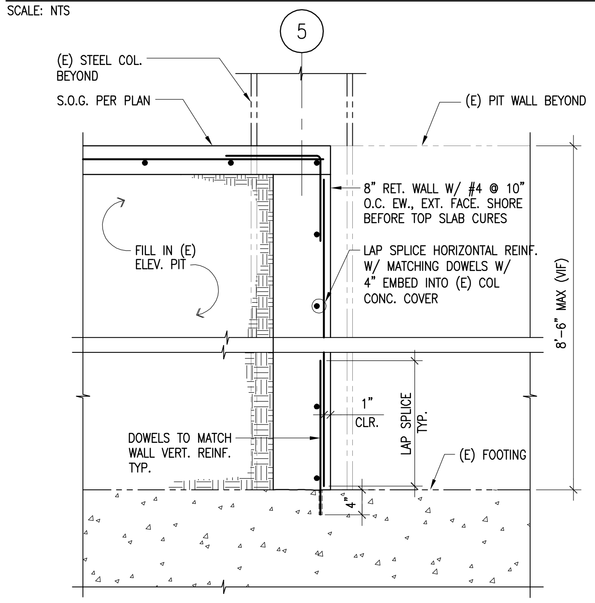

ELEVATOR PIT

SCALE: 1"=1'-0"

4 / S4.00

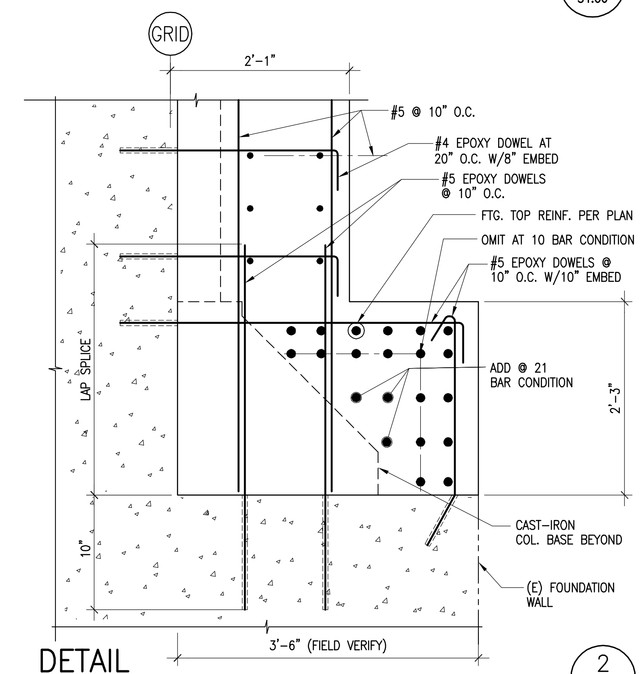

DETAIL

SCALE: 1"=1'-0"

2 / S4.00

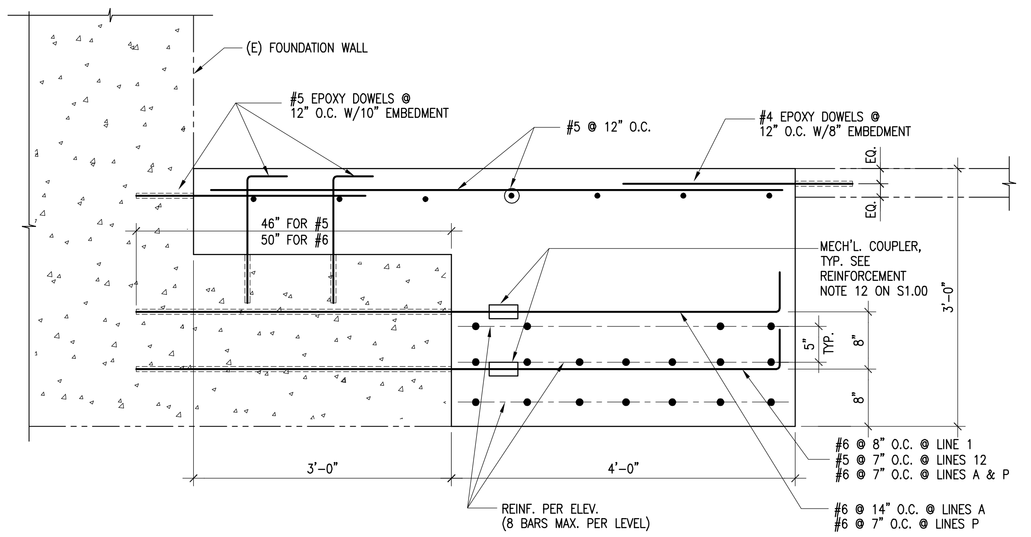

DETAIL

SCALE: 1"=1'-0"

3 / S4.11

NADEL
Architects Inc.

1990 So. Bundy Dr.
Fourth Floor
Los Angeles, CA 90025

T. 310.826.2100
F. 310.826.0182

www.nadelarc.com

CONSULTANT

NABIH YOUSSEF & ASSOCIATES
Structural Engineers
800 Wilshire Boulevard, Suite 200
Los Angeles, California 90017
TEL: (213) 362-0707
FAX: (213) 896-0018

REGISTERED PROFESSIONAL ENGINEER
NABIH F. G. YOUSSEF
No. 2026
Exp. 9/30/09
STRUCTURAL
STATE OF CALIFORNIA

COUNTY OF LOS ANGELES

THE HALL OF JUSTICE

STRUCTURAL RETROFIT PHASE

REVISIONS

1	
2	
3	
4	
5	
6	

DRAWING TITLE

SECTIONS AND DETAILS

SCALE :
DATE :
JOB NO : nya.05121.00
SHEET NO.

S4.00

SCOPING DOCUMENTS 100% SUBMISSION AUGUST 2010

X:\2005\05121-Hall of Justice\S\S4-00.dwg LAST PLOTTED ON Tue 07/08/08 - 11:51am

ALL DRAWINGS AND WRITTEN MATERIAL APPEARING HEREIN CONSTITUTE THE ORIGINAL AND UNPUBLISHED WORK OF THE ARCHITECT AND THE SAME MAY NOT BE DUPLICATED, USED OR DISCLOSED WITHOUT THE WRITTEN CONSENT OF THE ARCHITECT. COPYRIGHT: NADEL ARCHITECTS INC. ALL RIGHTS RESERVED.

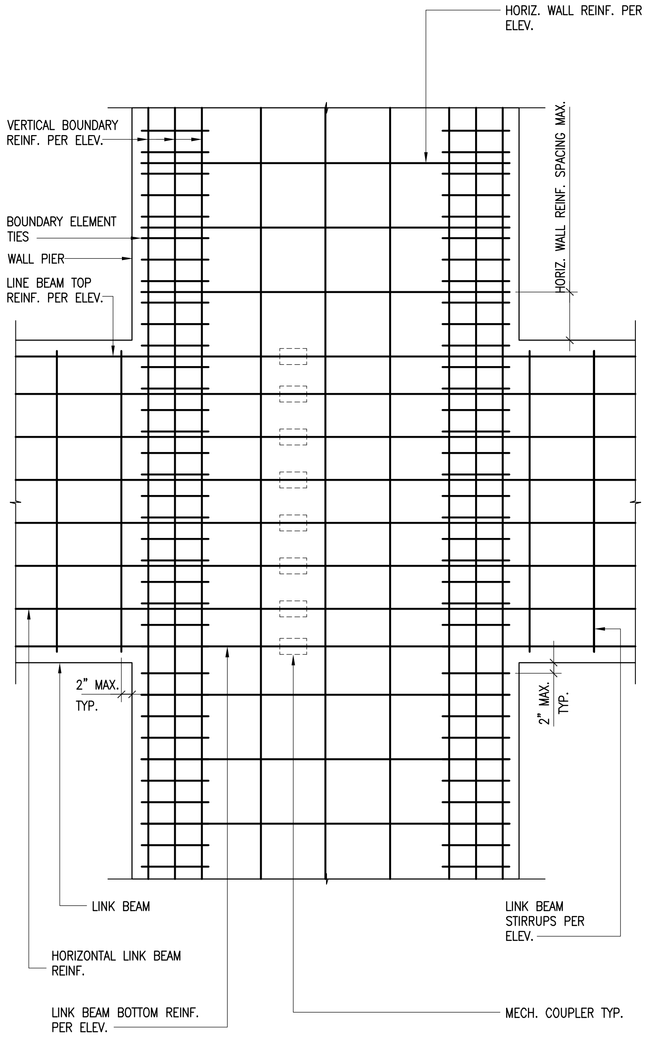

TYP. WALL INTERSECTION DETAIL

SCALE: 3/4"=1'-0"

17 S4.01

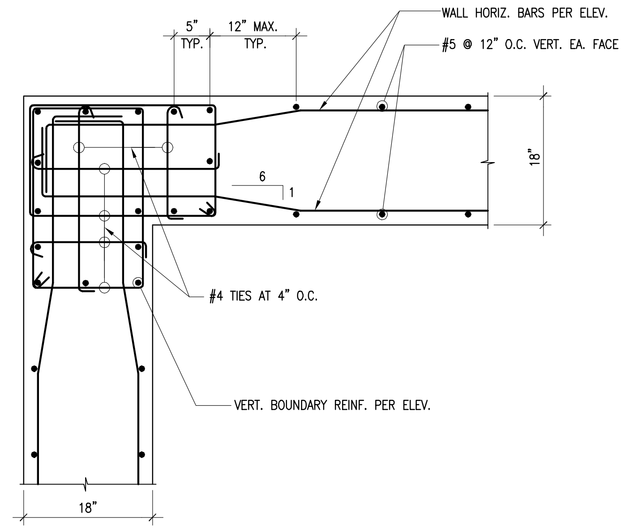

WALL BOUNDARY ELEMENT (16 BARS)

SCALE: 1"=1'-0"

13 S4.01

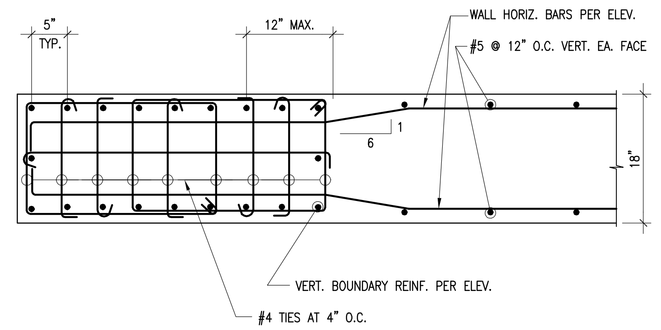

WALL BOUNDARY ELEMENT (20 BARS)

SCALE: 1"=1'-0"

9 S4.01

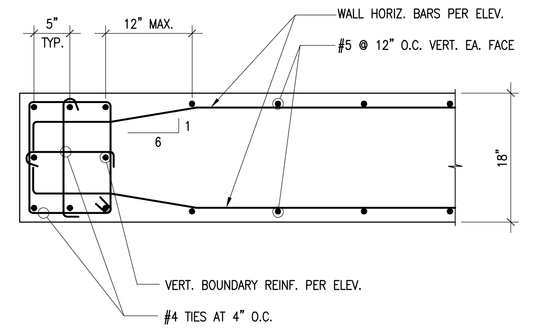

WALL BOUNDARY ELEMENT (8 BARS)

SCALE: 1"=1'-0"

5 S4.01

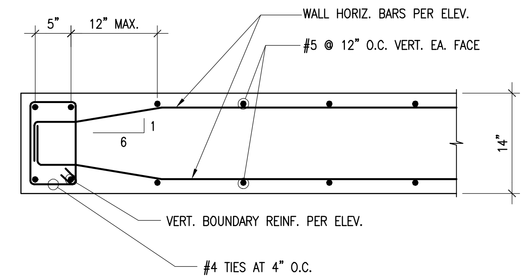

WALL BOUNDARY ELEMENT (4 BARS)

SCALE: 1"=1'-0"

1 S4.01

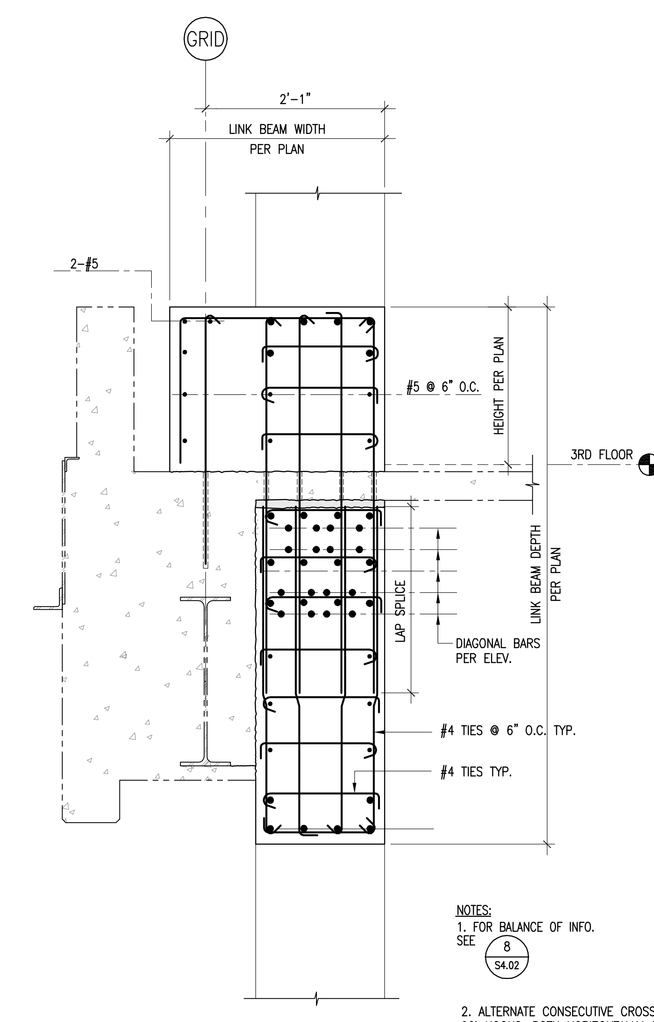

LINK BEAM SECTION

SCALE: 1"=1'-0"

18 S4.01

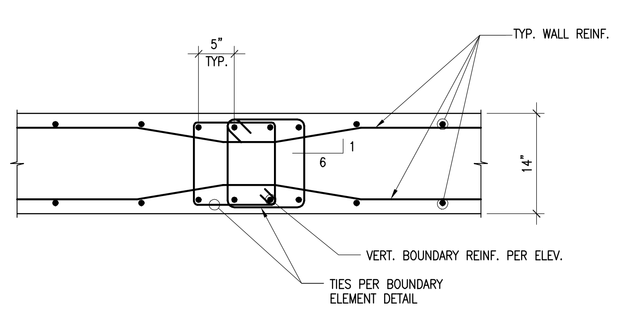

WALL BOUNDARY ELEMENT/LINK BEAM JOINT DETAIL

SCALE: 1"=1'-0"

15 S4.01

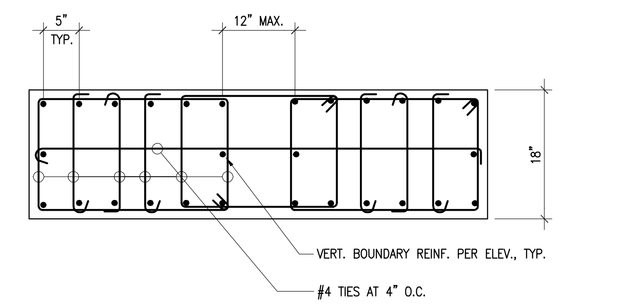

WALL BOUNDARY ELEMENT (14 BARS)

SCALE: 1"=1'-0"

16 S4.01

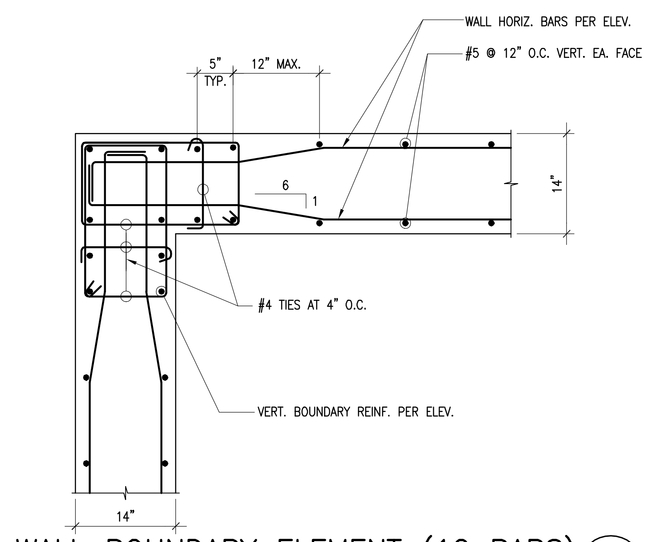

WALL BOUNDARY ELEMENT (12 BARS)

SCALE: 1"=1'-0"

11 S4.01

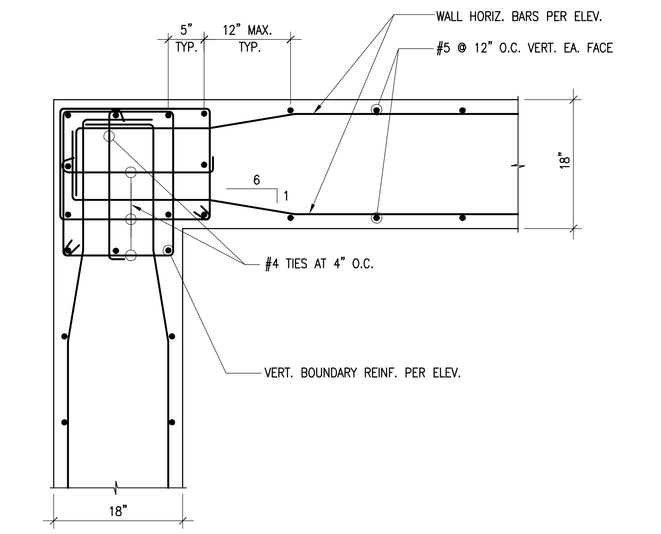

WALL BOUNDARY ELEMENT (8 BARS)

SCALE: 1"=1'-0"

10 S4.01

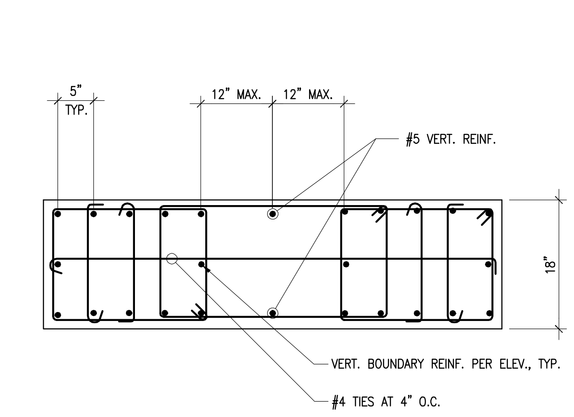

WALL BOUNDARY ELEMENT (12 BARS)

SCALE: 1"=1'-0"

7 S4.01

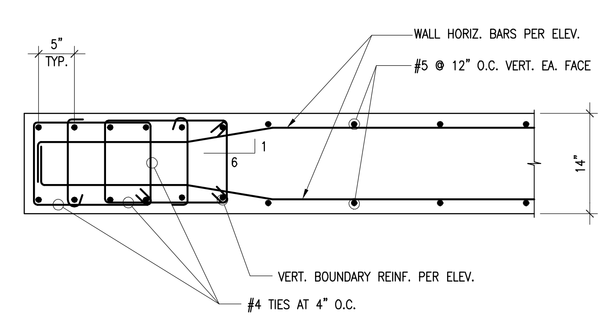

WALL BOUNDARY ELEMENT (12 BARS)

SCALE: 1"=1'-0"

3 S4.01

WALL BOUNDARY ELEMENT (14 BARS)

SCALE: 1"=1'-0"

16 S4.01

WALL BOUNDARY ELEMENT (12 BARS)

SCALE: 1"=1'-0"

12 S4.01

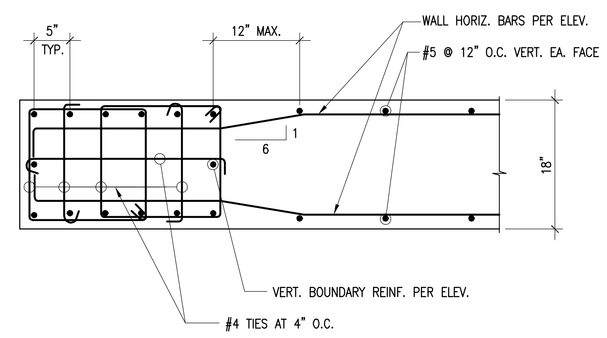

WALL BOUNDARY ELEMENT (14 BARS)

SCALE: 1"=1'-0"

8 S4.01

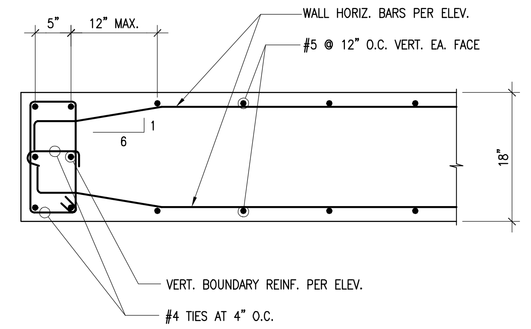

WALL BOUNDARY ELEMENT (6 BARS)

SCALE: 1"=1'-0"

4 S4.01

NADEL Architects Inc.
1990 So. Bundy Dr.
Fourth Floor
Los Angeles, CA 90025
T. 310.826.2100
F. 310.826.0182
www.nadelarc.com

CONSULTANT

NABIH YOUSSEF & ASSOCIATES
Structural Engineers
800 Wilshire Boulevard, Suite 200
Los Angeles, California 90017
TEL: (213) 362-0707
FAX: (213) 896-0018

REGISTERED PROFESSIONAL ENGINEER
NABIH F. G. YOUSSEF
No. 2026
Exp. 9/30/09
STRUCTURAL
STATE OF CALIFORNIA

COUNTY OF LOS ANGELES
THE HALL OF JUSTICE
STRUCTURAL RETROFIT PHASE

REVISIONS

DRAWING TITLE

SECTIONS AND DETAILS

AUGUST 2010
100% SUBMISSION
SCOPING DOCUMENTS

SCALE :
DATE :
JOB NO : nya.05121.00
SHEET NO.

S4.01

X:\2005\05121-Hall of Justice\S\S4-01.dwg LAST PLOTTED ON Tue 07/08/08 - 11:51am

ALL DRAWINGS AND WRITTEN MATERIAL APPEARING HEREIN CONSTITUTE THE ORIGINAL AND UNPUBLISHED WORK OF THE ARCHITECT AND THE SAME MAY NOT BE DUPLICATED, USED OR DISCLOSED WITHOUT THE WRITTEN CONSENT OF THE ARCHITECT. COPYRIGHT: NADEL ARCHITECTS INC. ALL RIGHTS RESERVED.

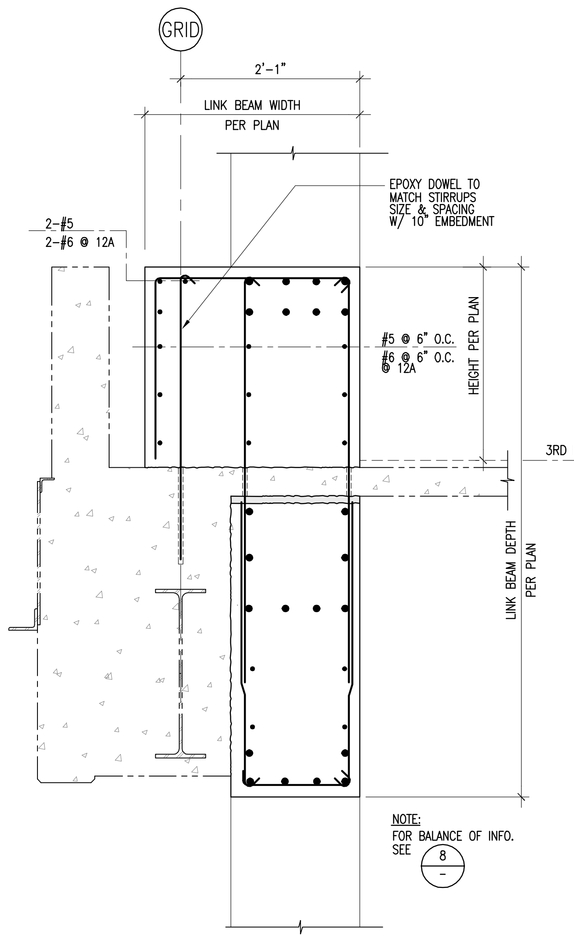

LINK BEAM SECTION

SCALE: 1"=1'-0"

12A S4.02 / 12 S4.02

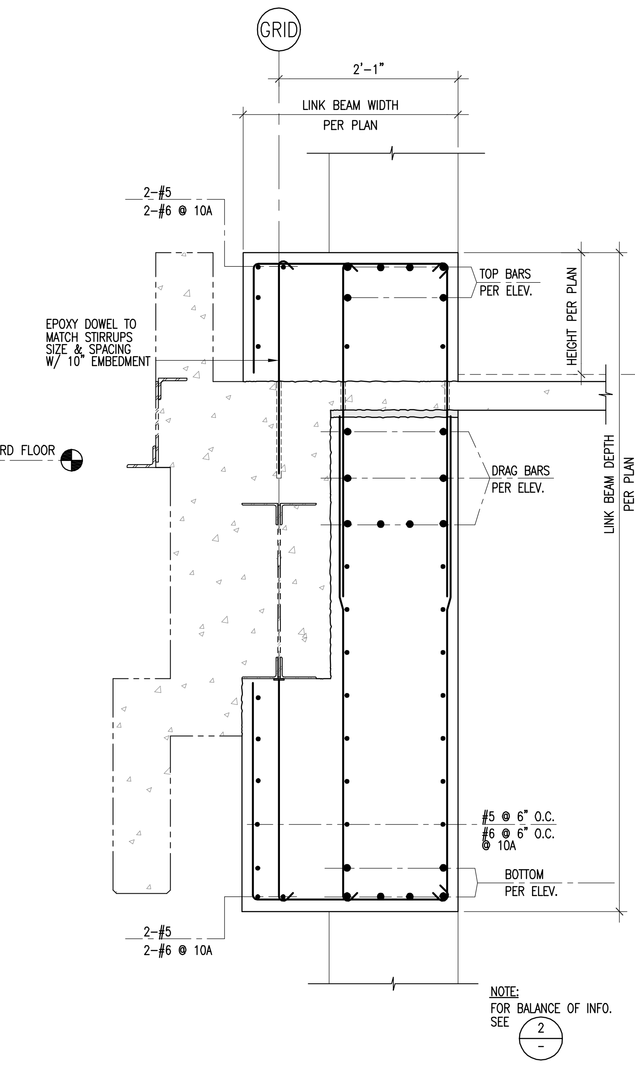

LINK BEAM SECTION

SCALE: 1"=1'-0"

10A S4.02 / 10 S4.02

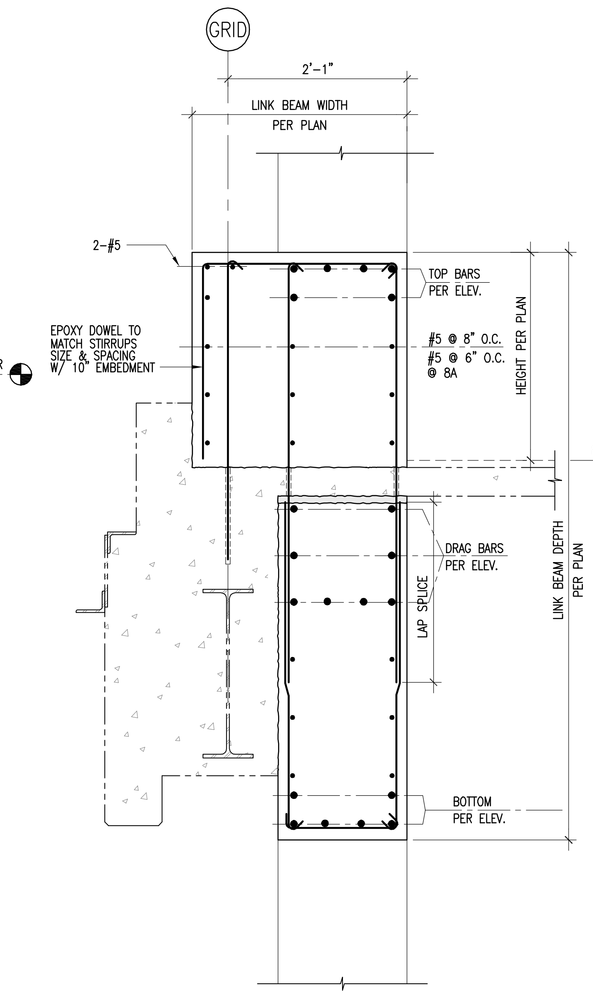

LINK BEAM SECTION

SCALE: 1"=1'-0"

8A S4.02 / 8 S4.02

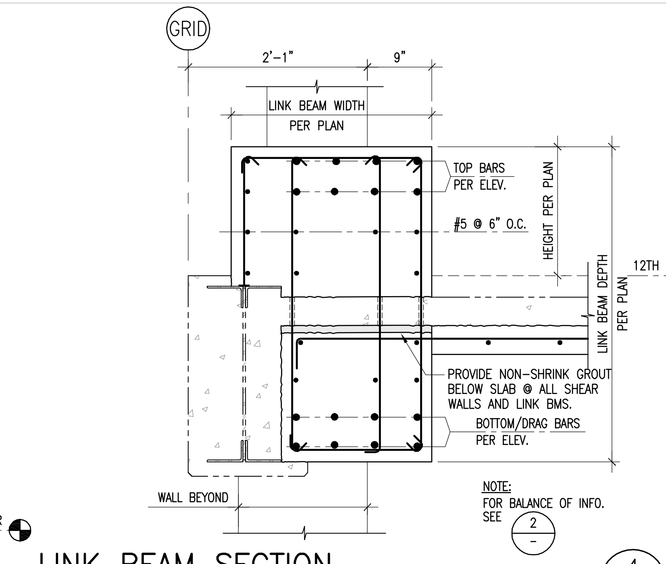

LINK BEAM SECTION

SCALE: 1"=1'-0"

4 S4.02

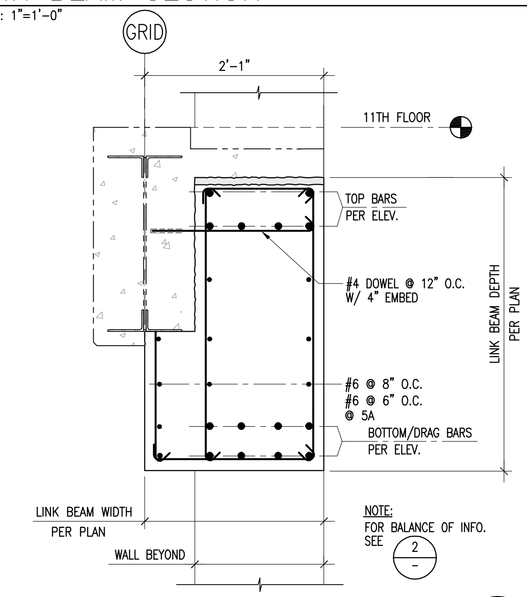

LINK BEAM SECTION

SCALE: 1"=1'-0"

5A S4.02 / 5 S4.02

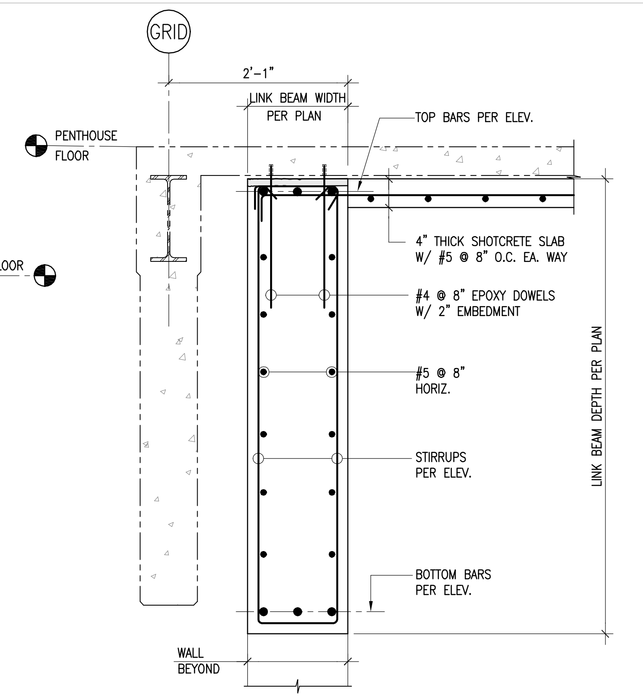

LINK BEAM SECTION

SCALE: 1"=1'-0"

1 S4.02

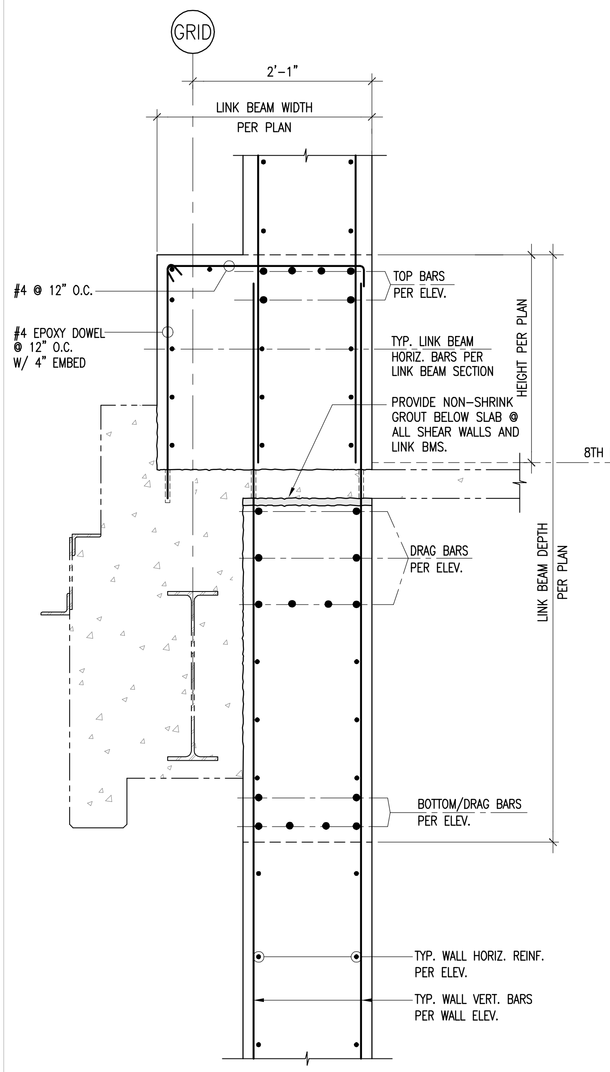

TYP. LINK BEAM/WALL JOINT DETAIL

SCALE: 1"=1'-0"

13 S4.02

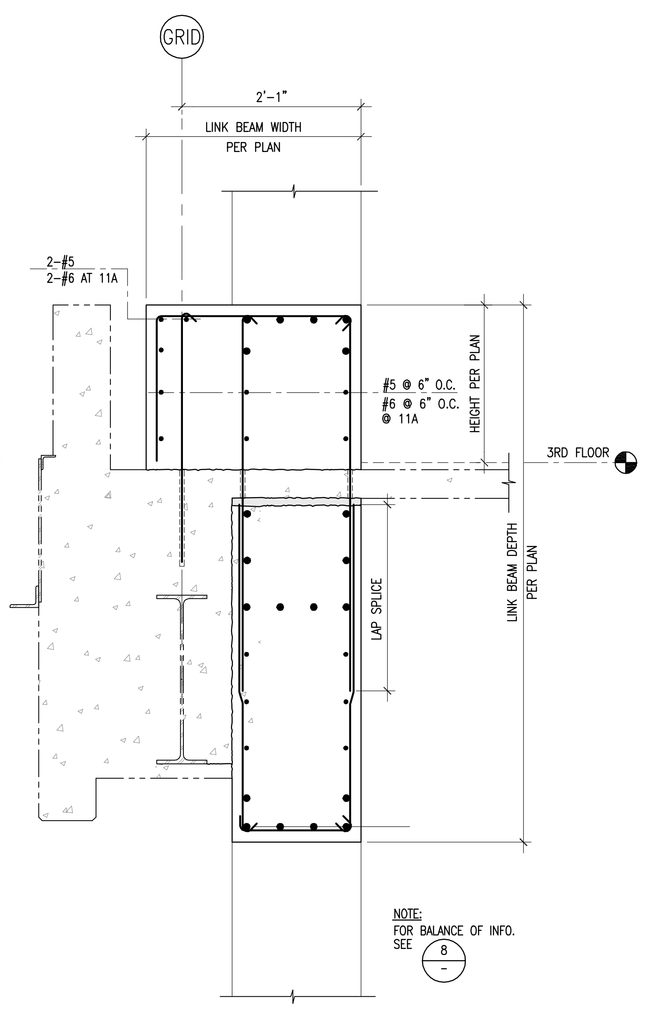

LINK BEAM SECTION

SCALE: 1"=1'-0"

11A S4.02 / 11 S4.02

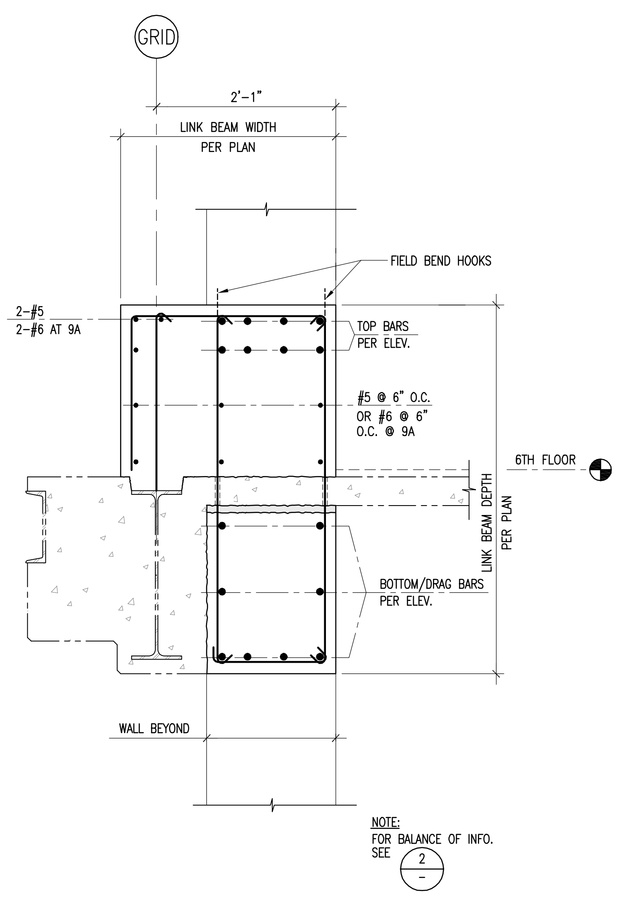

LINK BEAM SECTION

SCALE: 1"=1'-0"

9A S4.02 / 9 S4.02

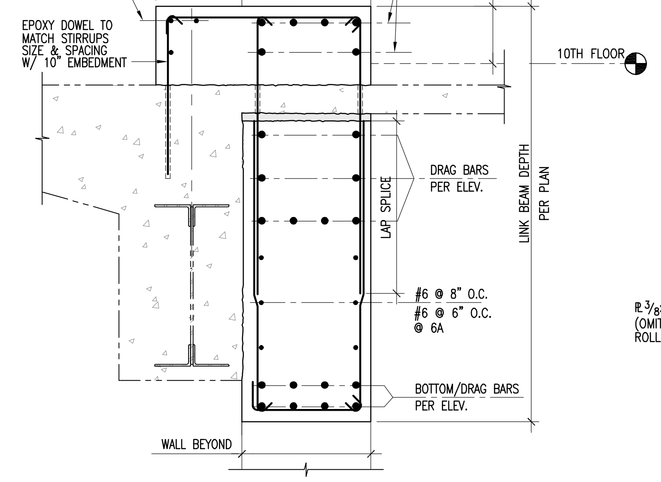

LINK BEAM SECTION

SCALE: 1"=1'-0"

6A S4.02 / 6 S4.02

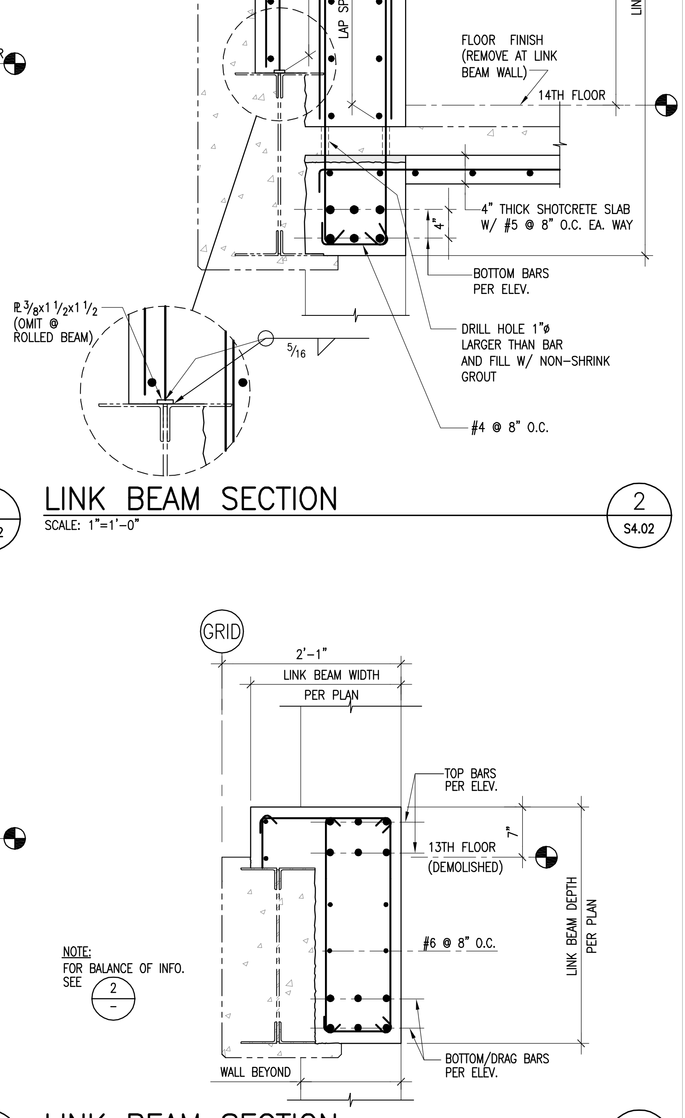

LINK BEAM SECTION

SCALE: 1"=1'-0"

2 S4.02

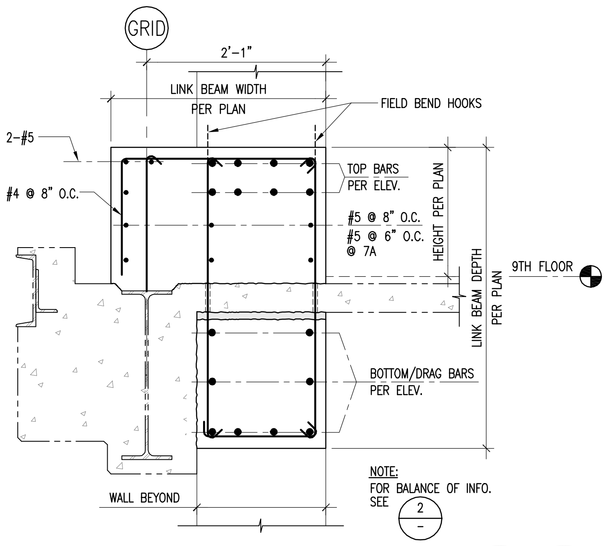

LINK BEAM SECTION

SCALE: 1"=1'-0"

7A S4.02 / 7 S4.02

LINK BEAM SECTION

SCALE: 1"=1'-0"

3 S4.02

NADEL Architects Inc.
1990 So. Bundy Dr.
Fourth Floor
Los Angeles, CA 90025
T. 310.826.2100
F. 310.826.0182
www.nadelarc.com

CONSULTANT

NABIH YOUSSEF & ASSOCIATES
Structural Engineers
800 Wilshire Boulevard, Suite 200
Los Angeles, California 90017
TEL: (213) 362-0707
FAX: (213) 896-2018

REGISTERED PROFESSIONAL ENGINEER NABIH F. G. YOUSSEF No. 2026 Exp. 9/30/09 STRUCTURAL STATE OF CALIFORNIA

COUNTY OF LOS ANGELES

THE HALL OF JUSTICE

STRUCTURAL RETROFIT PHASE

REVISIONS

DRAWING TITLE

SECTIONS AND DETAILS

AUGUST 2010

100% SUBMISSION

SCOPING DOCUMENTS

SCALE :

DATE :

JOB NO : nya.05121.00

SHEET NO.

S4.02

X:\2005\05121-Hall of Justice\S\S4-02.dwg LAST PLOTTED ON Tue 07/08/08 - 11:51am

ALL DRAWINGS AND WRITTEN MATERIAL APPEARING HEREIN CONSTITUTE THE ORIGINAL AND UNPUBLISHED WORK OF THE ARCHITECT AND THE SAME MAY NOT BE DUPLICATED, USED OR DISCLOSED WITHOUT THE WRITTEN CONSENT OF THE ARCHITECT. COPYRIGHT: NADEL ARCHITECTS INC. ALL RIGHTS RESERVED.

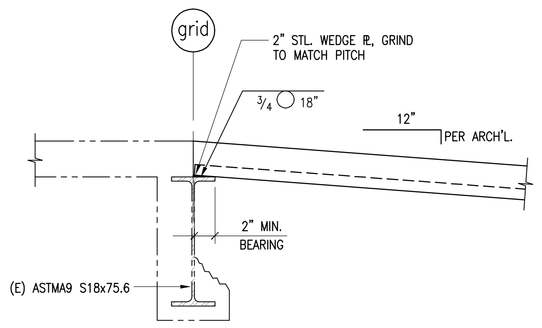

DETAIL
SCALE: NTS — 17 / S4.03

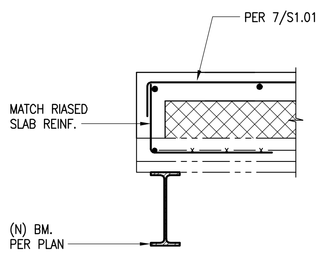

DETAIL
SCALE: NTS — 13 / S4.03

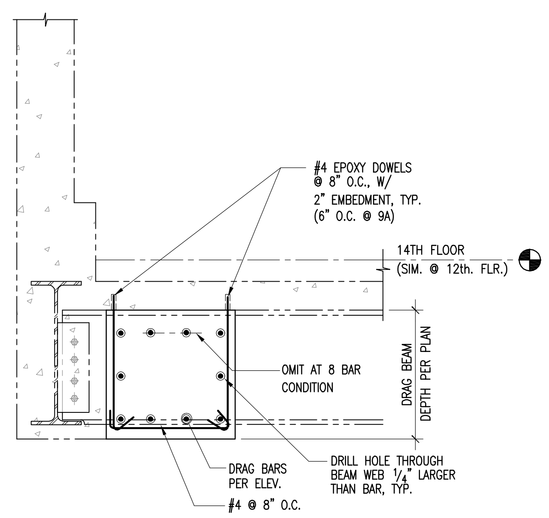

DRAG BEAM DETAIL
SCALE: 1"=1'-0" — 9A / S4.03 — 9 / S4.03

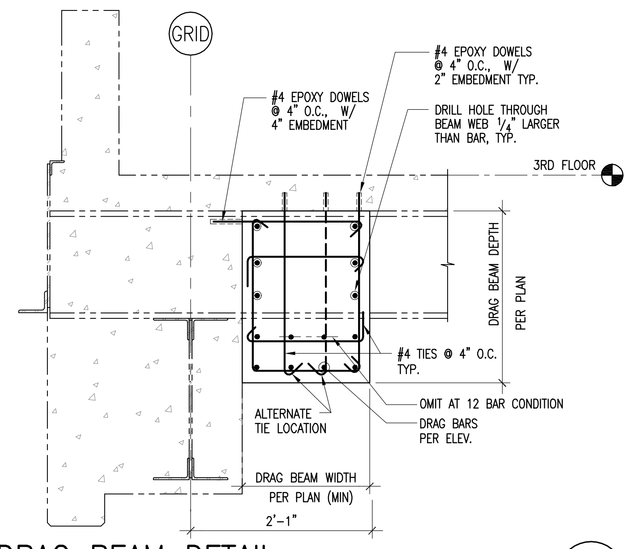

DRAG BEAM DETAIL
SCALE: 1"=1'-0" — 5 / S4.03

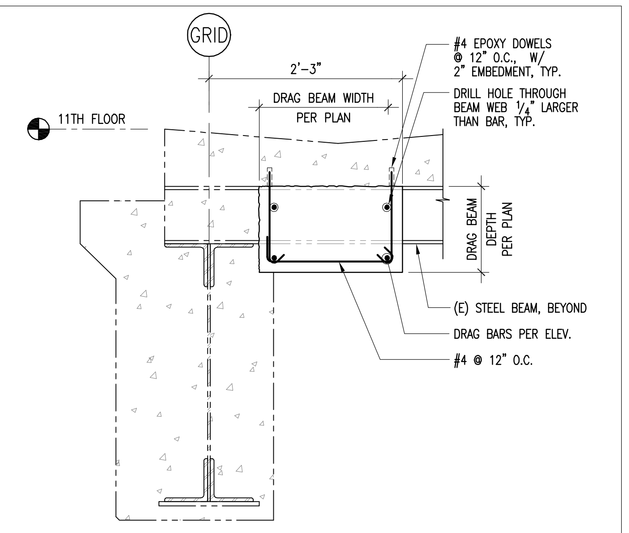

DRAG BEAM DETAIL
SCALE: 1"=1'-0" — 1 / S4.03

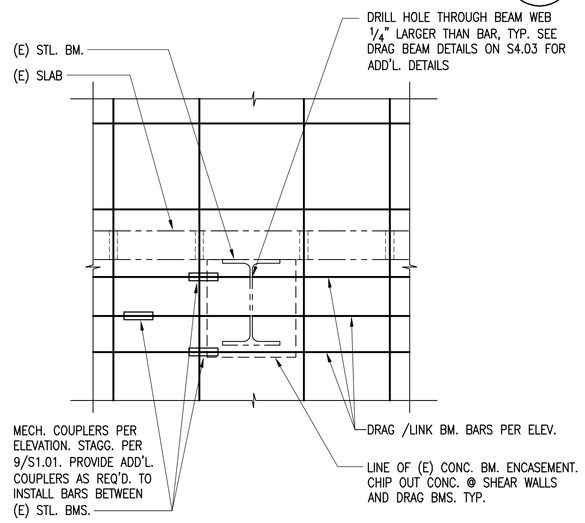

TYPICAL SHEAR WALL ELEVATION @ (E) STL. BM.
SCALE: NTS — 18 / S4.03

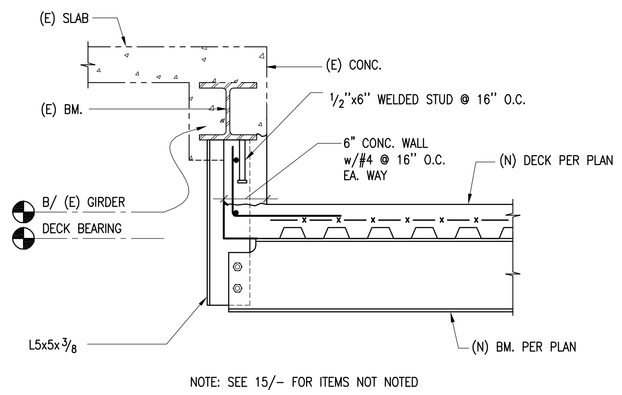

NOTE: SEE 15/– FOR ITEMS NOT NOTED

DETAIL
SCALE: NTS — 14 / S4.03

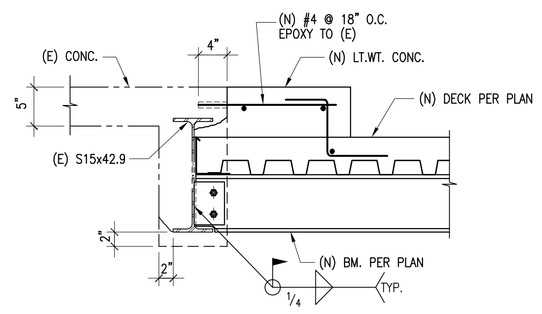

DETAIL @ NEW RAMP
SCALE: 1"=1'-0" — 10 / S4.03

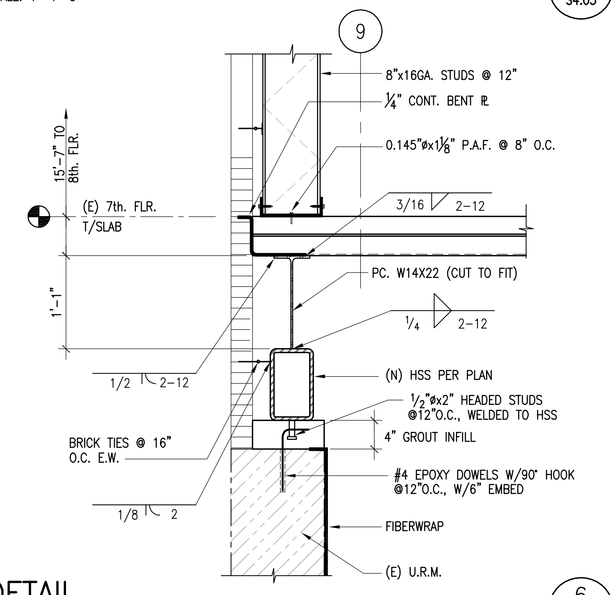

DETAIL
SCALE: 1"=1'-0" — 6 / S4.03

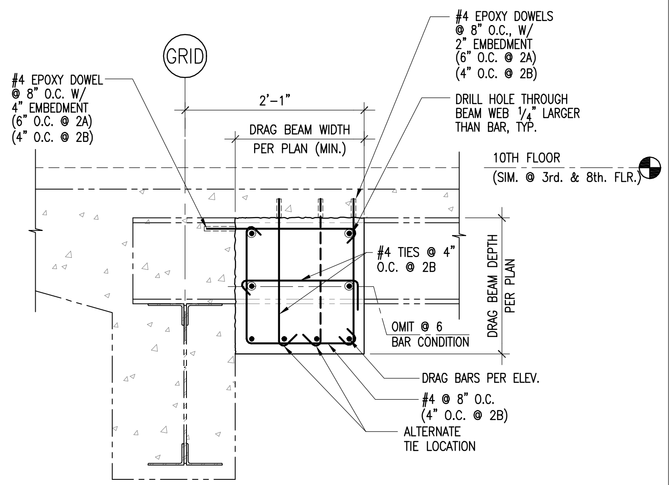

DRAG BEAM DETAIL
SCALE: 1"=1'-0" — 2B / S4.03 — 2A / S4.03 — 2 / S4.03

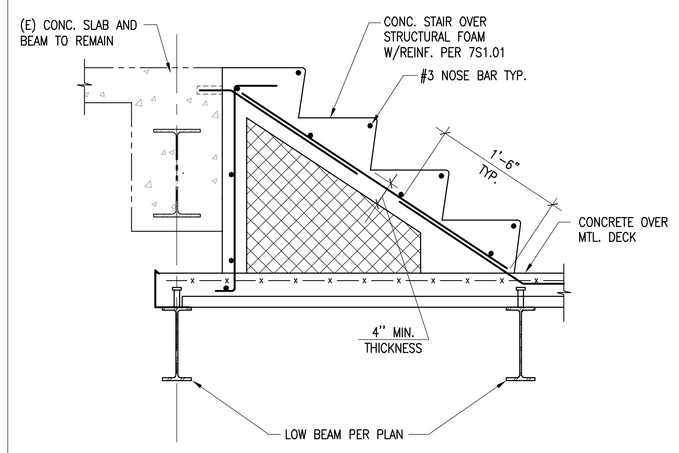

NOTE: PROVIDE SIDE WALLS PER 7/S1.01 ON EACH SIDE OF STAIR.

DETAIL
SCALE: NTS — 19 / S4.03

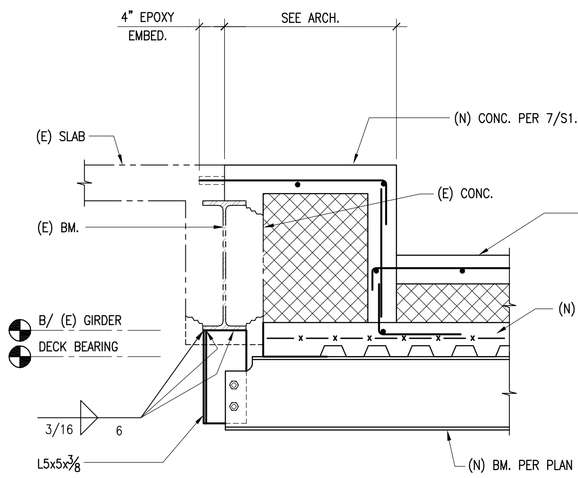

DETAIL
SCALE: NTS — 15 / S4.03

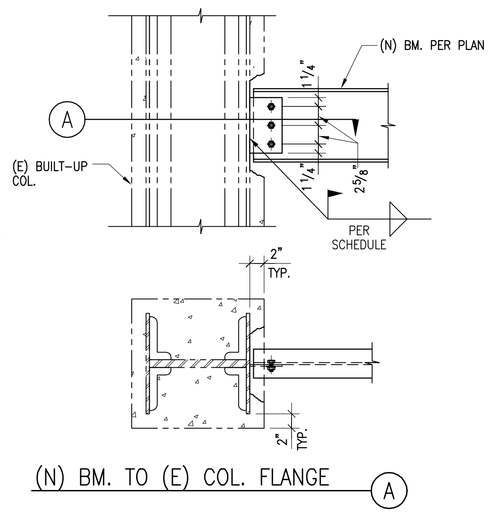

(N) BM. TO (E) COL. FLANGE
A

DETAIL
SCALE: 1"=1'-0" — 11 / S4.03

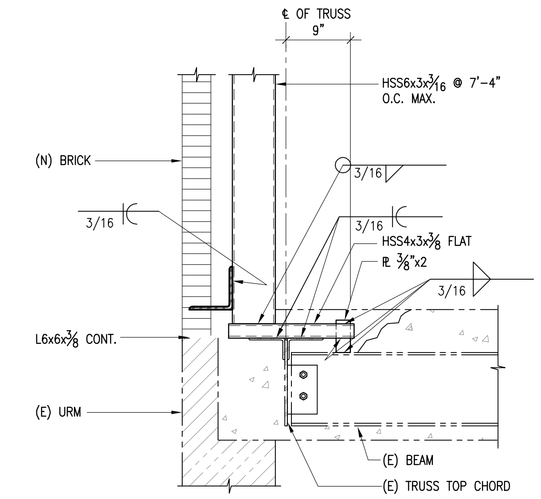

PARAPET SUPPORT TUBE DETAIL
SCALE: 1"=1'-0" — 7 / S4.03

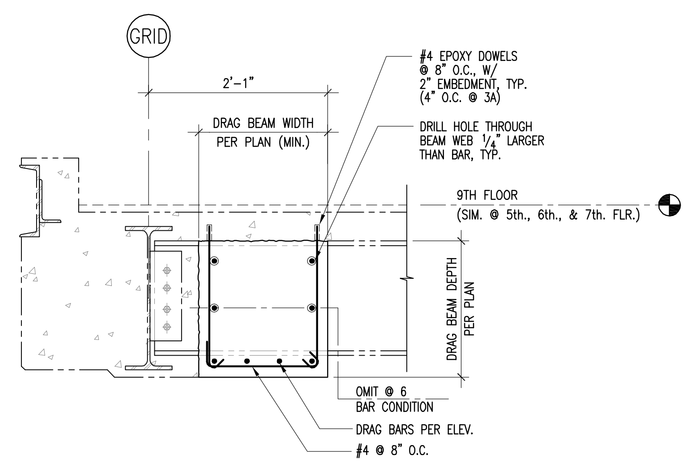

DRAG BEAM DETAIL
SCALE: 1"=1'-0" — 3A / S4.03 — 3 / S4.03

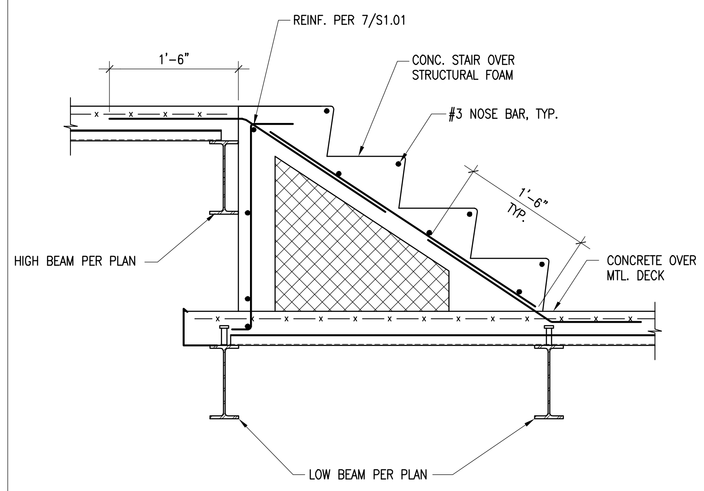

NOTE: SEE 19/– FOR ITEMS NOT NOTED

4th FLOOR STAIR TRANSITION
SCALE: NTS — 20 / S4.03

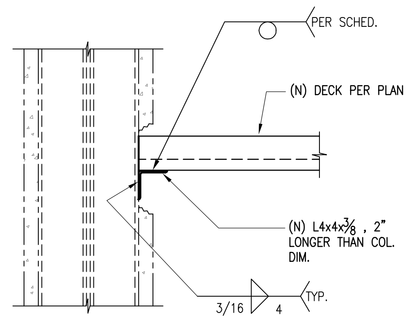

DETAIL
SCALE: NTS — 16 / S4.03

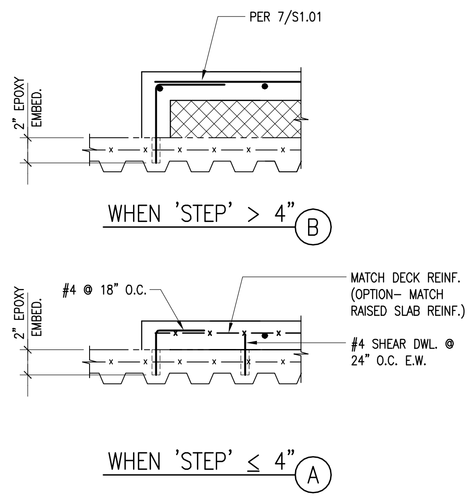

MID–DECK SLAB STEP
SCALE: NTS — 12 / S4.03

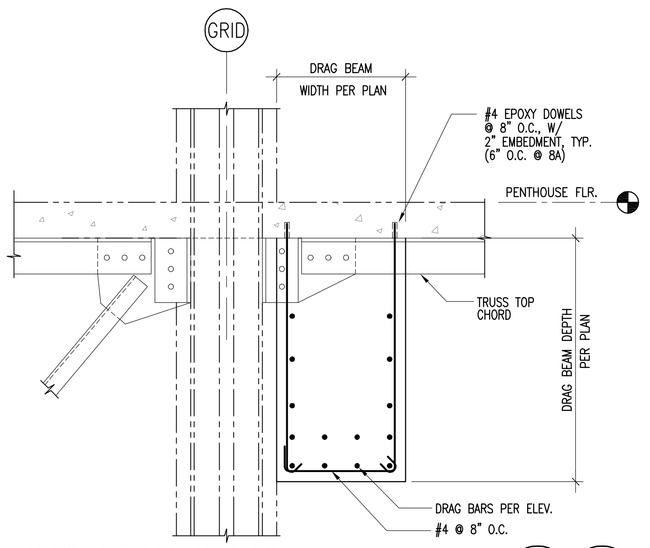

DRAG BEAM DETAIL
SCALE: 1"=1'-0" — 8A / S4.03 — 8 / S4.03

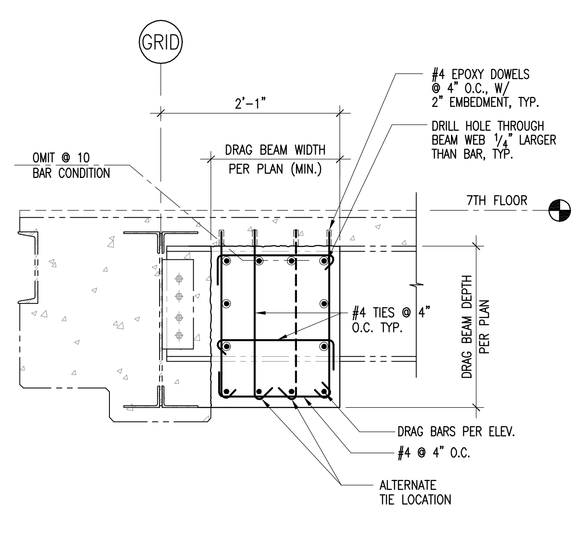

DRAG BEAM DETAIL
SCALE: 1"=1'-0" — 4 / S4.03

NADEL Architects Inc.
1990 So. Bundy Dr.
Fourth Floor
Los Angeles, CA 90025
T. 310.826.2100
F. 310.826.0182
www.nadelarc.com

CONSULTANT

NABIH YOUSSEF & ASSOCIATES
Structural Engineers
800 Wilshire Boulevard, Suite 200
Los Angeles, California 90017
TEL: (213) 362-0707
FAX: (213) 896-0018
REGISTERED PROFESSIONAL ENGINEER
NABIH F. G. YOUSSEF
No. 2026
Exp. 9/30/09
STRUCTURAL
STATE OF CALIFORNIA

COUNTY OF LOS ANGELES
THE HALL OF JUSTICE
STRUCTURAL RETROFIT PHASE

REVISIONS

DRAWING TITLE

SECTIONS AND DETAILS

AUGUST 2010
100% SUBMISSION
SCOPING DOCUMENTS

SCALE :
DATE :
JOB NO : nya.05121.00
SHEET NO.
S4.03

X:\2005\05121-Hall of Justice\S\S4-03.dwg LAST PLOTTED ON Tue 07/08/08 – 11:51am

ALL DRAWINGS AND WRITTEN MATERIAL APPEARING HEREIN CONSTITUTE THE ORIGINAL AND UNPUBLISHED WORK OF THE ARCHITECT AND THE SAME MAY NOT BE DUPLICATED, USED OR DISCLOSED WITHOUT THE WRITTEN CONSENT OF THE ARCHITECT. COPYRIGHT: NADEL ARCHITECTS INC. ALL RIGHTS RESERVED.

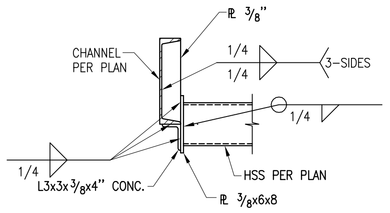

DETAIL
SCALE: 1"=1'-0"

13 / S4.04

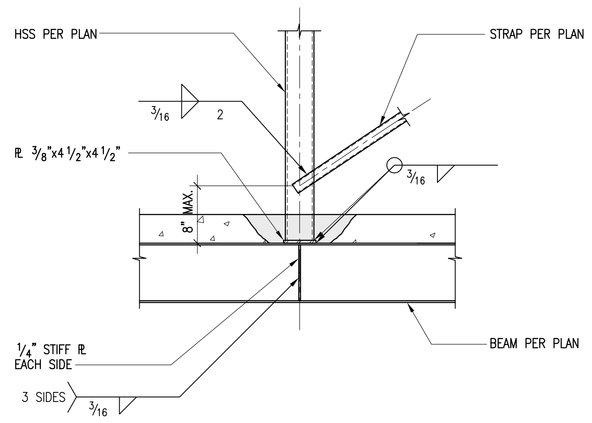

DETAIL
SCALE: 1"=1'-0"

9 / S4.04

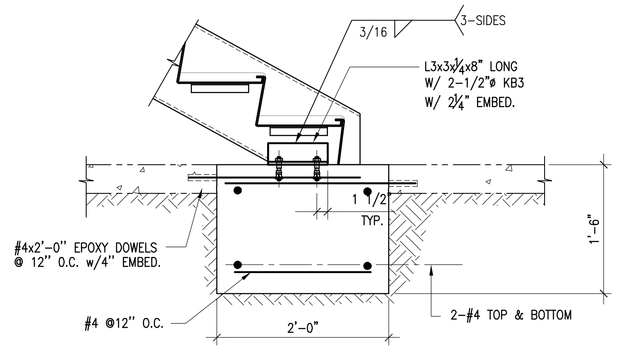

DRAG BEAM DETAIL
SCALE: 1"=1'-0"

5 / S4.04

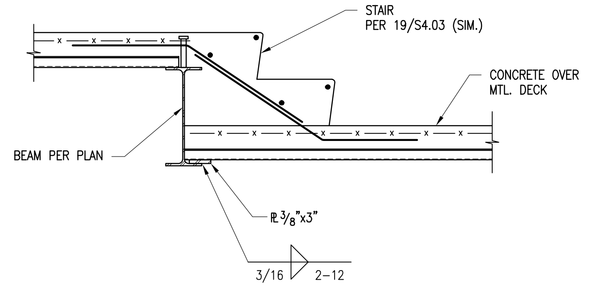

STAIR DETAIL
SCALE: 1"=1'-0"

1 / S4.04

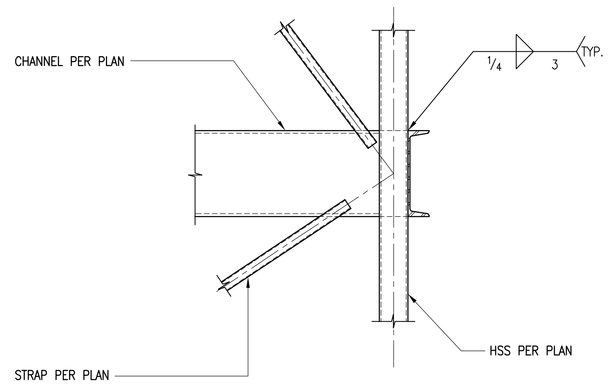

DETAIL
SCALE: 1"=1'-0"

10 / S4.04

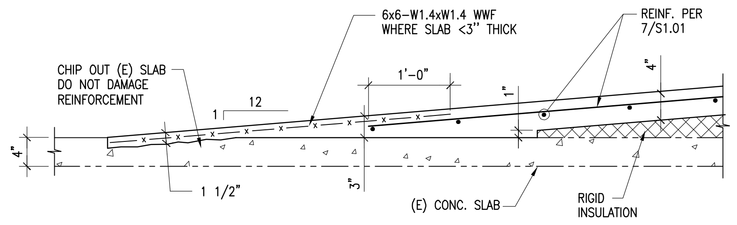

RAMP SECTION
SCALE: 1"=1'-0"

6 / S4.04

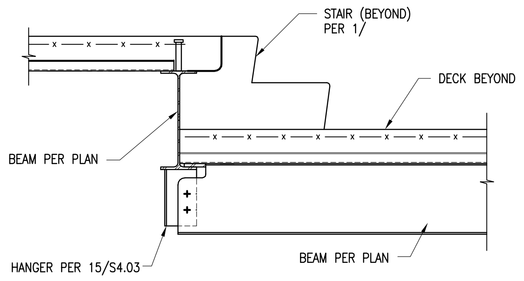

DETAIL
SCALE: 1"=1'-0"

2 / S4.04

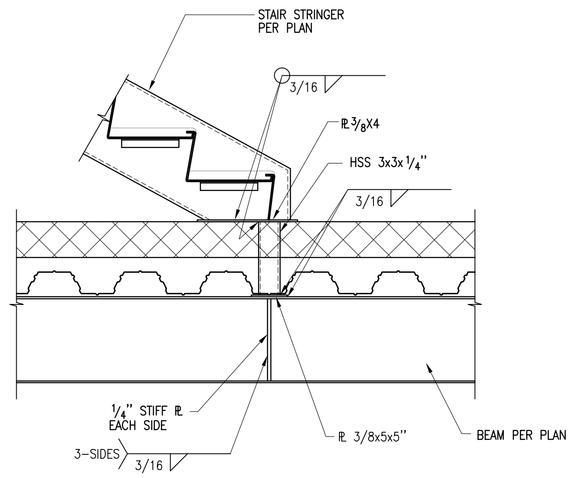

DETAIL
SCALE: 1"=1'-0"

11 / S4.04

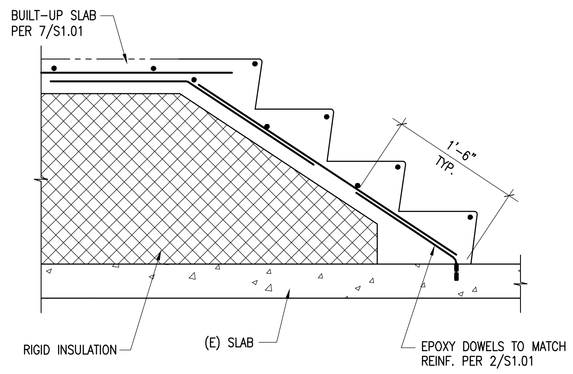

STAIR SECTION
SCALE: 1"=1'-0"

7 / S4.04

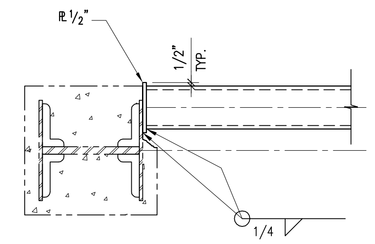

(N) BM. TO (E) COL. FLANGE-PLAN
SCALE: 1"=1'-0"

3 / S4.04

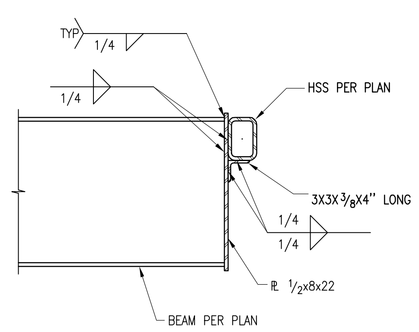

DETAIL
SCALE: 1"=1'-0"

12 / S4.04

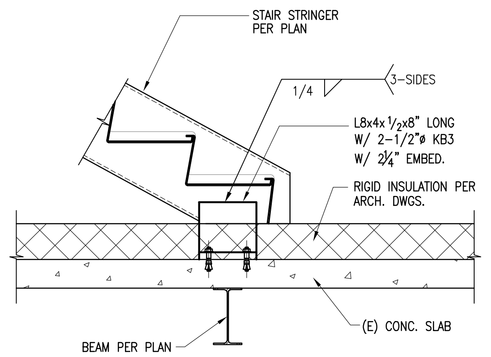

DETAIL
SCALE: 1"=1'-0"

8 / S4.04

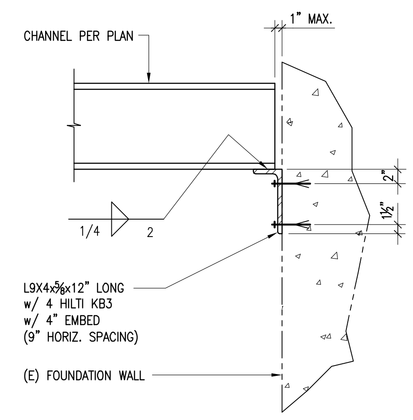

DETAIL
SCALE: 1"=1'-0"

4 / S4.04

NADEL
Architects Inc.

1990 So. Bundy Dr.
Fourth Floor
Los Angeles, CA 90025

T. 310.826.2100
F. 310.826.0182

www.nadelarc.com

CONSULTANT

NABIH YOUSSEF & ASSOCIATES
Structural Engineers
800 Wilshire Boulevard, Suite 200
Los Angeles, California 90017
TEL: (213) 362-0707
FAX: (213) 896-2018

REGISTERED PROFESSIONAL ENGINEER
NABIH F. G. YOUSSEF
No. 2026
Exp. 9/30/09
STRUCTURAL
STATE OF CALIFORNIA

COUNTY OF LOS ANGELES

THE HALL OF JUSTICE

STRUCTURAL RETROFIT PHASE

REVISIONS

DRAWING TITLE

SECTIONS AND DETAILS

SCOPING DOCUMENTS 100% SUBMISSION AUGUST 2010

SCALE :
DATE :
JOB NO : nya.05121.00
SHEET NO.

S4.04

K:\2005\05121-Hall of Justice\S\S4-04.dwg LAST PLOTTED ON Tue 07/08/08 - 11:51am

ALL DRAWINGS AND WRITTEN MATERIAL APPEARING HEREIN CONSTITUTE THE ORIGINAL AND UNPUBLISHED WORK OF THE ARCHITECT AND THE SAME MAY NOT BE DUPLICATED, USED OR DISCLOSED WITHOUT THE WRITTEN CONSENT OF THE ARCHITECT. COPYRIGHT: NADEL ARCHITECTS INC. ALL RIGHTS RESERVED.

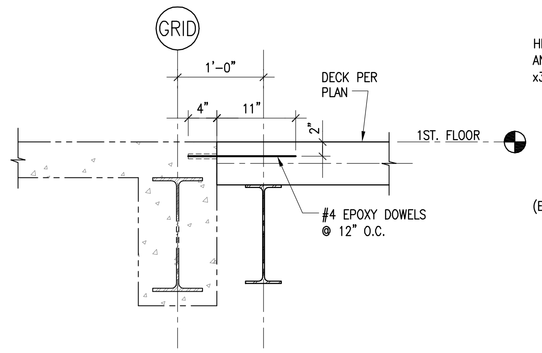

DETAIL
SCALE: 1"=1'-0" — 15 / S4.11

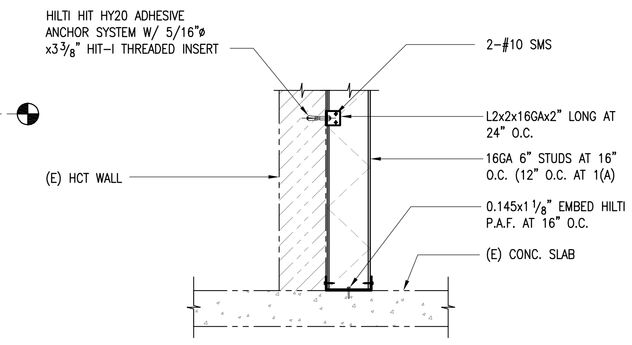

NOTE: SEE 4/S1.02 FOR STUD BLOCKING.

DETAIL
SCALE: 1"=1'-0" — 11A / S4.11 and 11 / S4.11

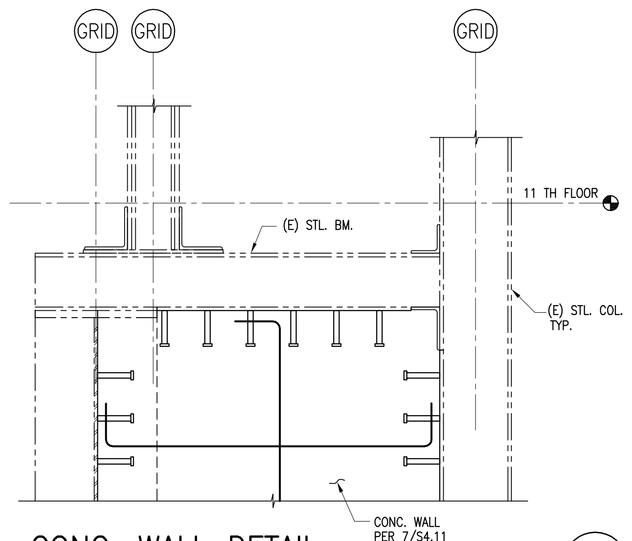

CONC. WALL DETAIL
SCALE: 1"=1'-0" — 8 / S4.11

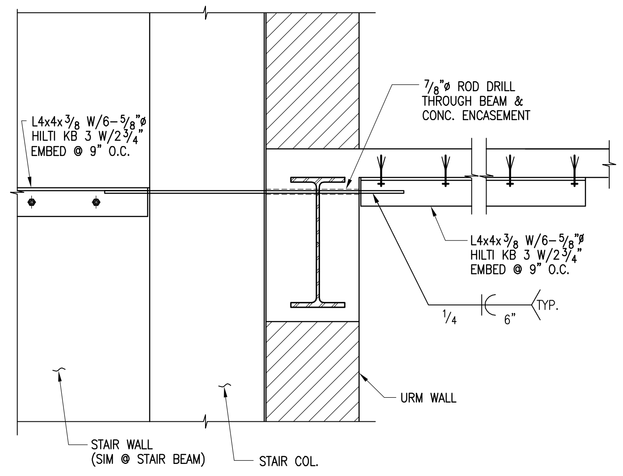

DETAIL
4 / S4.11

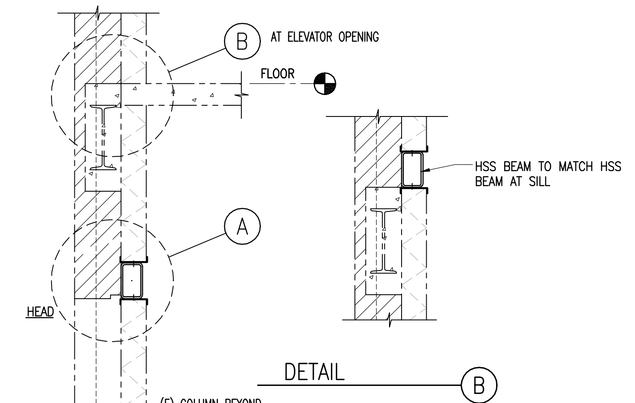

DETAIL
SCALE: NTS — 1 / S4.11

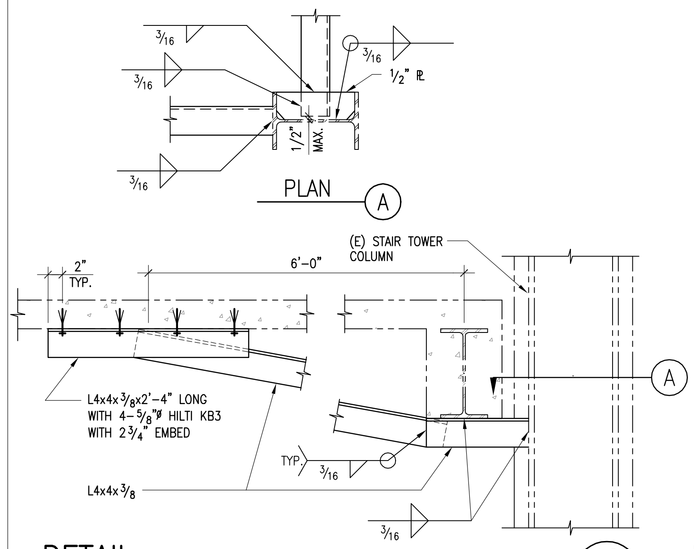

DETAIL
SCALE: 1"=1'-0" — 16 / S4.11

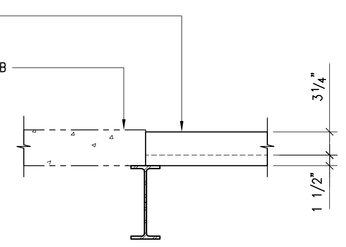

DETAIL
SCALE: 1"=1'-0" — 12 / S4.11

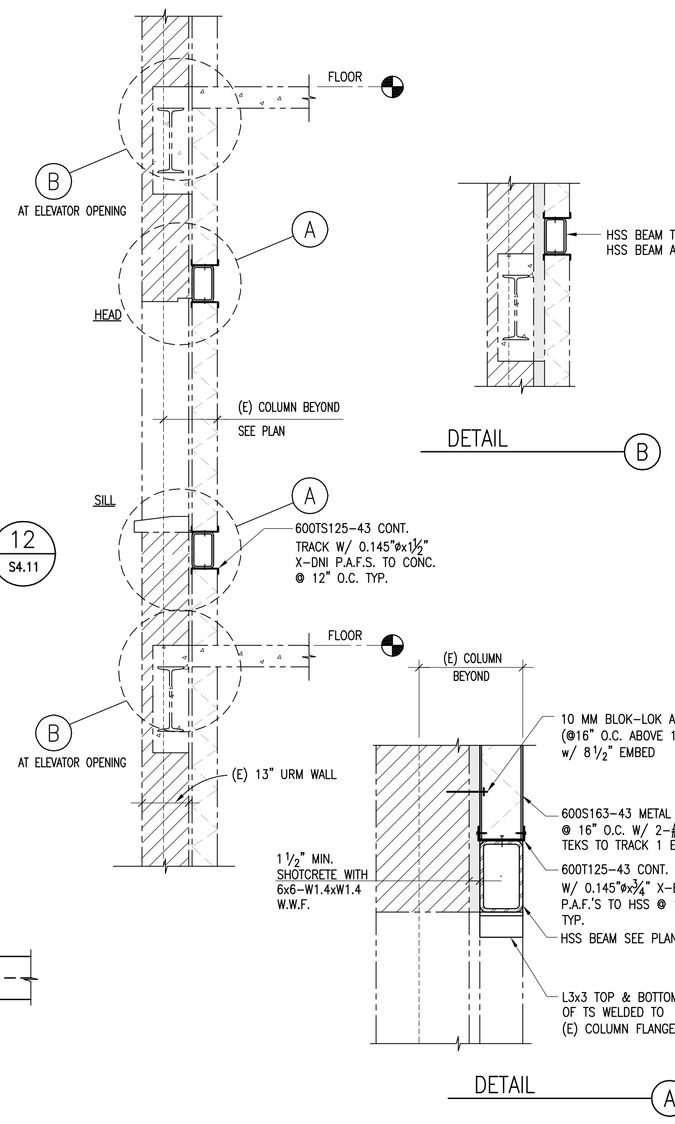

DETAIL
SCALE: 1"=1'-0" — 9 / S4.11

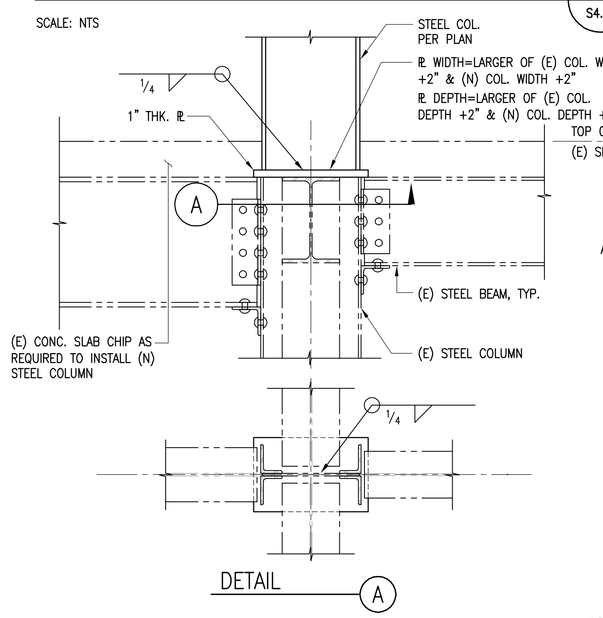

TYP COLUMN EXTENSION SPLICE
SCALE: NTS — 5 / S4.11

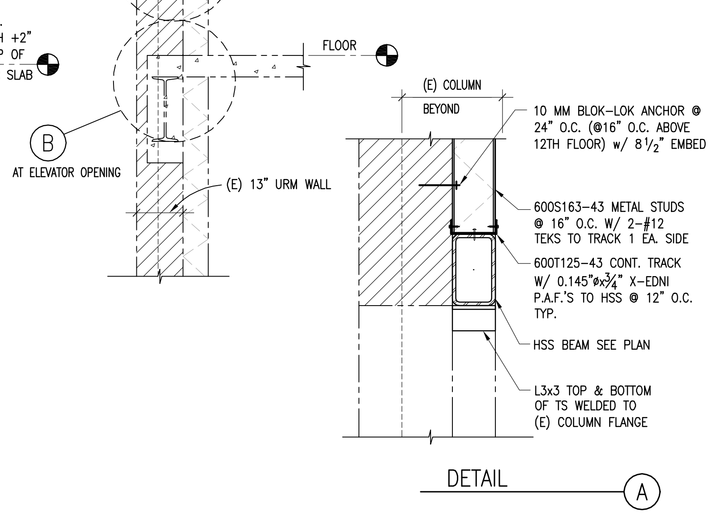

STRONG BACK SECTION
SCALE: NTS — 1 / S4.11

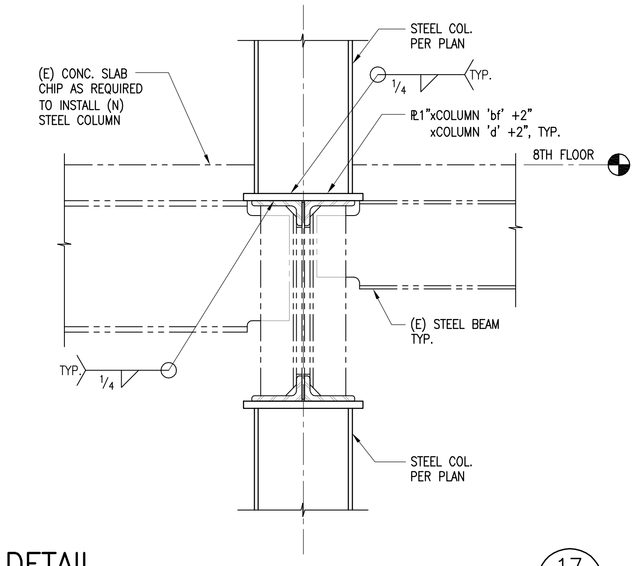

DETAIL
SCALE: 1"=1'-0" — 17 / S4.11

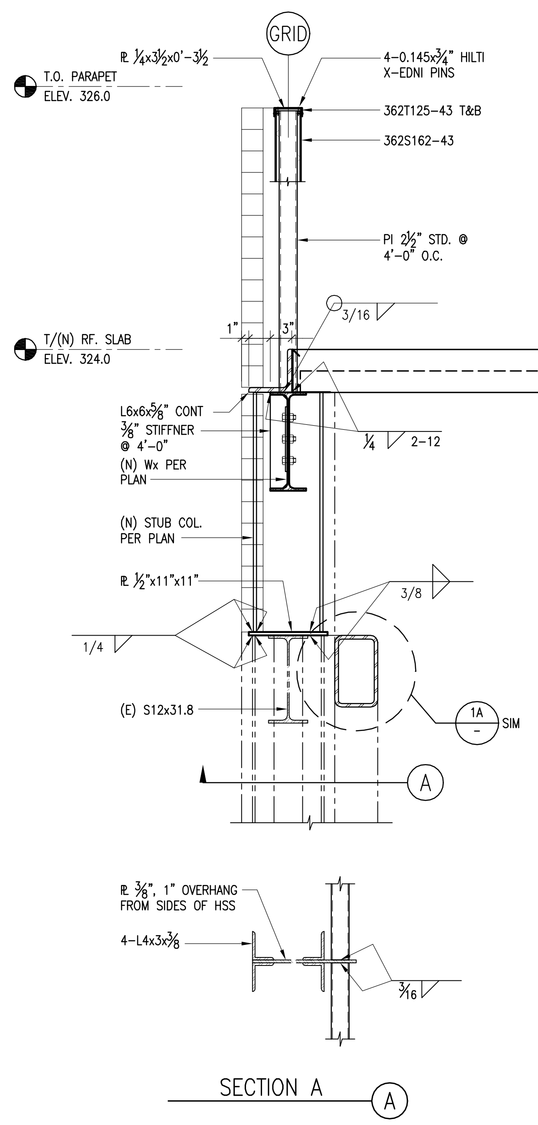

DETAIL
SCALE: 1"=1'-0" — 14 / S4.11

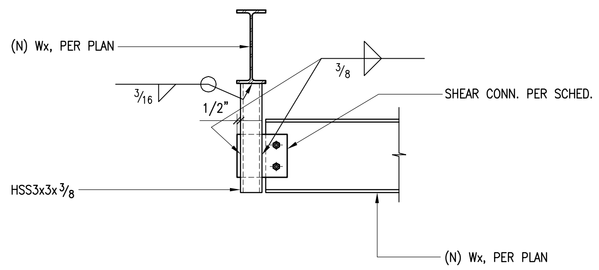

DETAIL
SCALE: 1"=1'-0" — 10 / S4.11

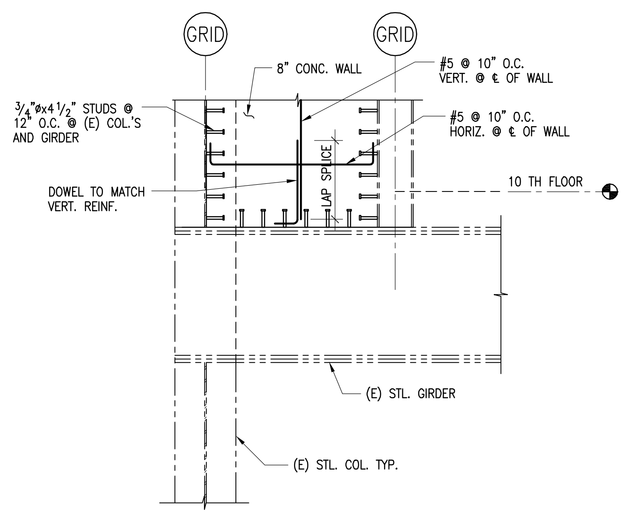

DETAIL
SCALE: 1/2"=1'-0" — 7 / S4.11

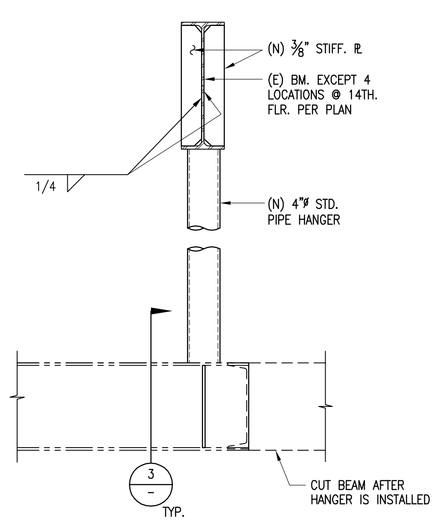

HANGER DETAIL
SCALE: NTS — 2 / S4.11

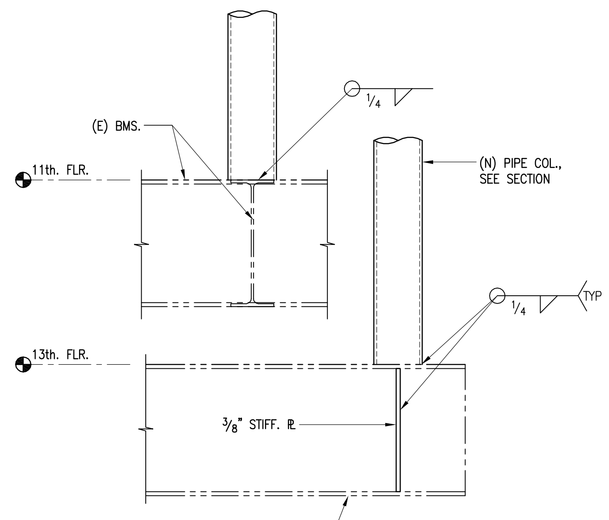

DETAIL
SCALE: NTS — 3 / S4.11

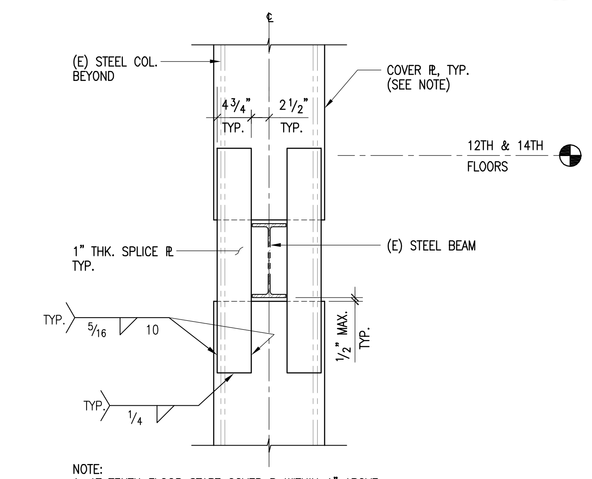

NOTE:
1. AT TENTH FLOOR START COVER R WITHIN 1" ABOVE (E) CONCRETE SLAB. BELOW ROOF END COVER R WITHIN 1" BELOW (E) STEEL BEAM OR JOIST CONCRETE COVER.
2. SEE 1/S4.12 WHERE (E) COLUMN SPLICE OCCURS ABOVE 14TH FLOOR.

DETAIL
SCALE: 1"=1'-0" — 18 / S4.11

NADEL Architects Inc.
1990 So. Bundy Dr.
Fourth Floor
Los Angeles, CA 90025
T. 310.826.2100
F. 310.826.0182
www.nadelarc.com

CONSULTANT

NABIH YOUSSEF & ASSOCIATES
Structural Engineers
800 Wilshire Boulevard, Suite 200
Los Angeles, California 90017
TEL: (213) 362-0707
FAX: (213) 362-3018

REGISTERED PROFESSIONAL ENGINEER
NABIH F. G. YOUSSEF
No. 2026
Exp. 9/30/09
STRUCTURAL
STATE OF CALIFORNIA

COUNTY OF LOS ANGELES
THE HALL OF JUSTICE
STRUCTURAL RETROFIT PHASE

REVISIONS

1	
2	
3	
4	
5	
6	

DRAWING TITLE

SECTIONS AND DETAILS

AUGUST 2010
100% SUBMISSION
SCOPING DOCUMENTS

SCALE :
DATE :
JOB NO : nya.05121.00
SHEET NO.
S4.11

X:\2005\05121-Hall of Justice\S\S4-11.dwg LAST PLOTTED ON Tue 07/08/08 - 11:51am

ALL DRAWINGS AND WRITTEN MATERIAL APPEARING HEREIN CONSTITUTE THE ORIGINAL AND UNPUBLISHED WORK OF THE ARCHITECT AND THE SAME MAY NOT BE DUPLICATED, USED OR DISCLOSED WITHOUT THE WRITTEN CONSENT OF THE ARCHITECT. COPYRIGHT: NADEL ARCHITECTS INC. ALL RIGHTS RESERVED.

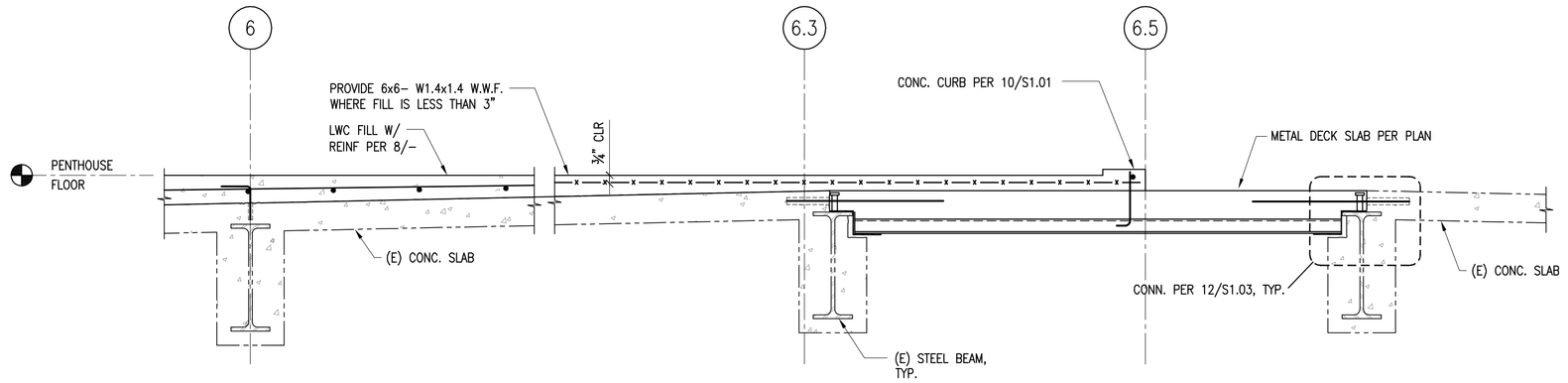

NOTE: SEE MECH'L DWGS FOR CONCRETE PAD LOCATION SIZE AND EQUIPMENT ANCHORAGE

SECTION
SCALE: 1"=1'-0"

9 / S4.12

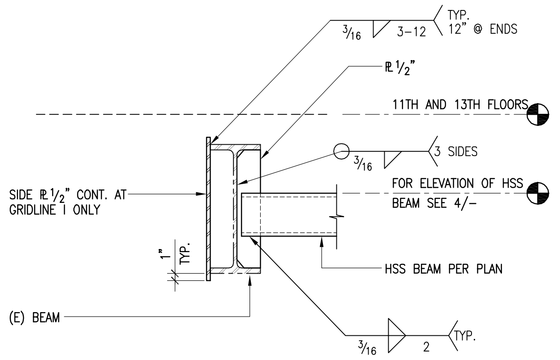

NOTE:
START SIDE ℄ 1" FROM (E) STEEL COLUMN
CONC. COVER

DETAIL
SCALE: 1"=1'-0"

5 / S4.12

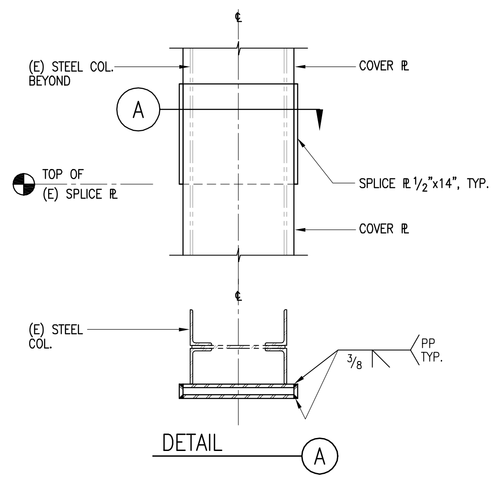

NOTE: SPLICE OCCURS 1'-0" ABOVE 14TH FLOOR AT THE FOLLOWING LOCATIIONS: 5-G, 5-J, 6-G, 6-J, 8-G, 8-J.

DETAIL
SCALE: 1"=1'-0"

1 / S4.12

BRACE FRAME CONNECTION SCHEDULE

BRACE	CONNECTION							
	GUSSET PLATE THICKNESS (GRADE 50) 'tp'	WELD "A" DIAGONAL BRACE TO GUSSET ℄		WELD "B" GUSSET TO BEAM		WELD "C" GUSSET ℄ TO COLUMN		
		SIZE	LENGTH 'La'	SIZE	LENGTH 'Lb'	SIZE	LENGTH 'Lc'	LOCATION
HSS5x5x3/8	1/2"	1/4"	10"	1/4"	20"	1/4"	8"	TYP TO COLUMN FLANGE, U.N.O.
HSS5x5x5/8	1/2"	1/4"	10"	1/4"	29"	1/4"	6"	TYP TO COLUMN WEB, U.N.O.
HSS6x6x1/2	1/2"	1/4"	12"	1/4"	14"	1/4"	10"	TYP TO COLUMN FLANGE, U.N.O.
HSS6x6x1/2	1/2"	1/4"	12"	1/4"	22"	1/4"	8"	TYP TO COLUMN WEB, U.N.O.
HSS6x6x5/8	1/2"	1/4"	12"	3/8"	21"	1/4"	12"	TYP TO COLUMN FLANGE, U.N.O.

NOTES:

1. SLOT C.L. OF BRACES TO RECEIVE GUSSET PL. SLOT TO BE 1/8" WIDER THAN GUSSET ℄ THICKNESS, TYP.
2. PROVIDE BOLTS W/THREADS EXCLUDED FROM THE SHEAR PLANE.
3. GUSSET PLATES SIZE SHALL BE BASED ON WELD LENGTH "La", "Lb", & "Lc".
4. ALL CONNECTION PLATES SHALL BE A572 GRADE 50.

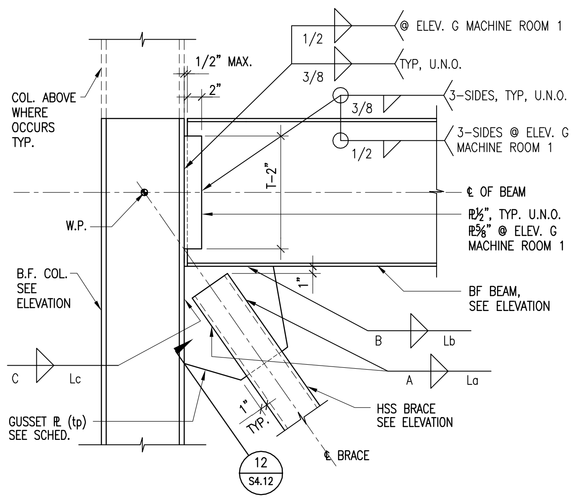

BRACE TO COLUMN FLANGE (B)

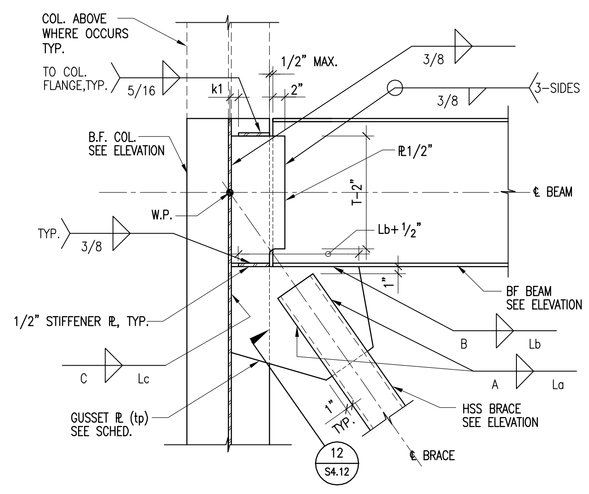

BRACE TO COLUMN WEB (A)

BF DETAIL
SCALE: NTS

10 / S4.12

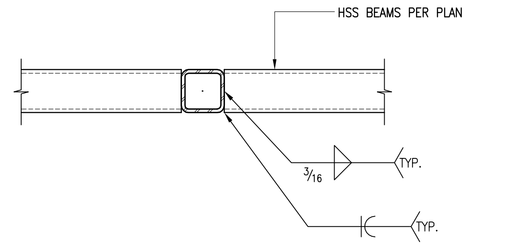

DETAIL
SCALE: 1"=1'-0"

6 / S4.12

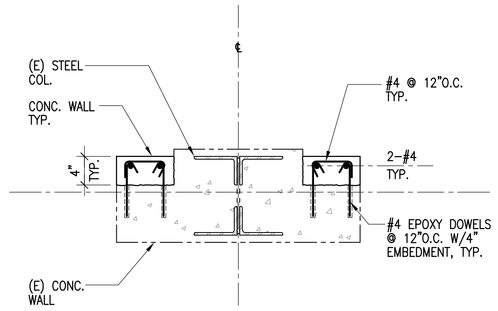

NOTE:
LAP SPLICE VERTICAL BARS WITH EPOXY DOWELS W/ 2" EMBEDMENT INTO 12TH & 14TH FLOOR SLABS

DETAIL
SCALE: 1"=1'-0"

2 / S4.12

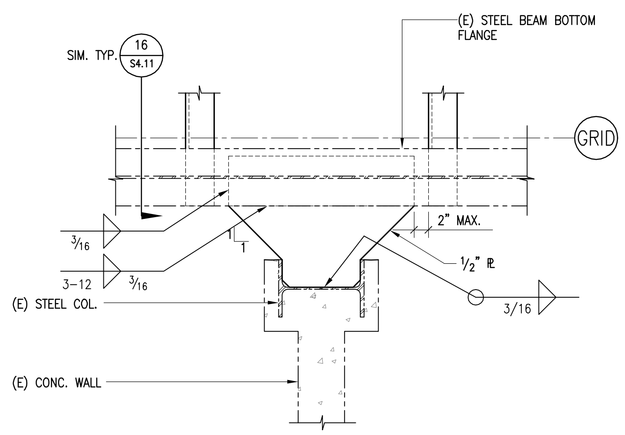

DETAIL
SCALE: 1"=1'-0"

15 / S4.12

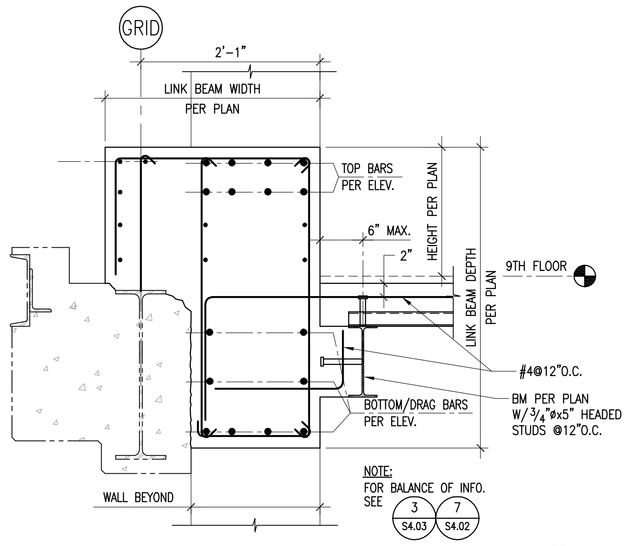

LINK BEAM SECTION
SCALE: 1"=1'-0"

13 / S4.12

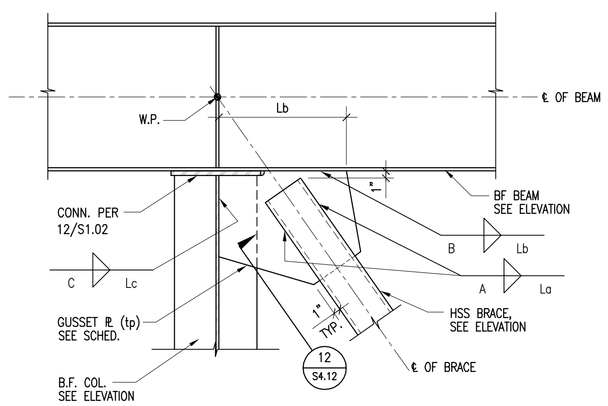

NOTE: 1. SEE 10/S4.12 FOR SCHEDULE AND NOTES.

BF DETAIL
SCALE: 1"=1'-0"

11 / S4.12

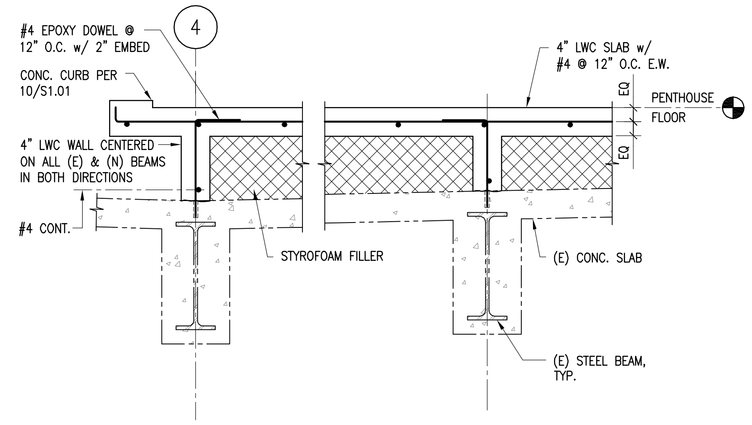

SECTION
SCALE: 1"=1'-0"

7 / S4.12

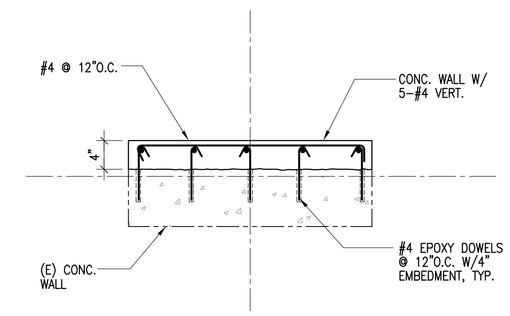

NOTE:
LAP SPLICE VERTICAL BARS WITH EPOXY DOWELS W/ 2" EMBEDMENT INTO 12TH & 14TH FLOOR SLABS

DETAIL
SCALE: 1"=1'-0"

3 / S4.12

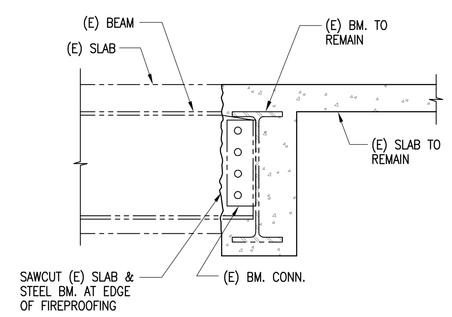

NOTE:
DEMO (E) BEAM CONN. WHERE REQUIRED FOR INSTALLATION OF (N) BEAM

DETAIL
SCALE: 1"=1'-0"

16 / S4.12

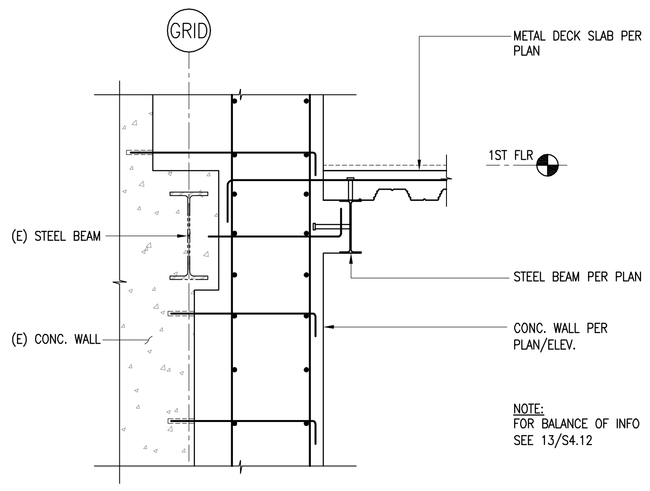

DETAIL
SCALE: 1"=1'-0"

14 / S4.12

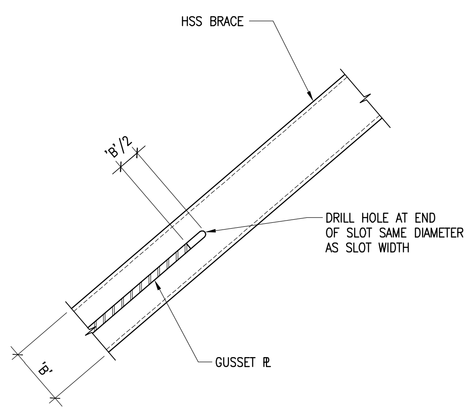

BF DETAIL
SCALE: 1"=1'-0"

12 / S4.12

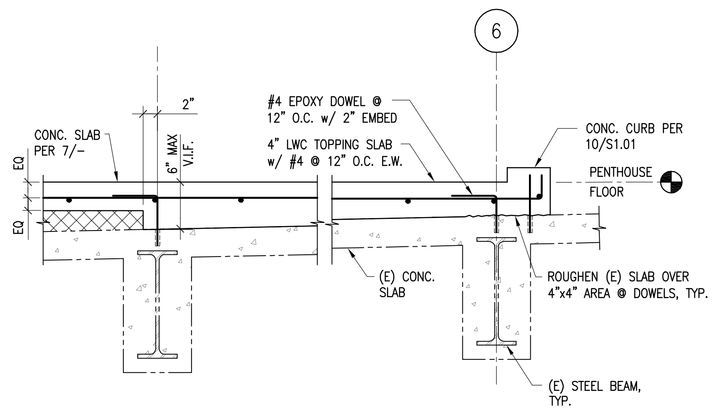

SECTION
SCALE: 1"=1'-0"

8 / S4.12

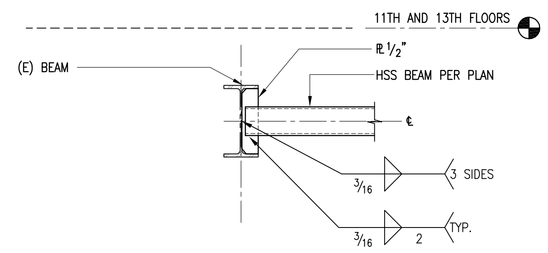

DETAIL
SCALE: 1"=1'-0"

4 / S4.12

NADEL Architects Inc.

1990 So. Bundy Dr.
Fourth Floor
Los Angeles, CA 90025

T. 310.826.2100
F. 310.826.0182

www.nadelarc.com

CONSULTANT

NABIH YOUSSEF & ASSOCIATES
Structural Engineers
800 Wilshire Boulevard, Suite 200
Los Angeles, California 90017
TEL: (213) 362-0707
FAX: (213) 896-0018

REGISTERED PROFESSIONAL ENGINEER
NABIH F. G. YOUSSEF
No. 2026
Exp. 9/30/09
STRUCTURAL
STATE OF CALIFORNIA

COUNTY OF LOS ANGELES

THE HALL OF JUSTICE

STRUCTURAL RETROFIT PHASE

REVISIONS

1	
2	
3	
4	
5	
6	

DRAWING TITLE

SECTIONS AND DETAILS

SCOPING DOCUMENTS 100% SUBMISSION AUGUST 2010

SCALE :
DATE :
JOB NO : nya.05121.00
SHEET NO.

S4.12

K:\2005\05121-Hall of Justice\S\S4-12.dwg LAST PLOTTED ON Tue 07/08/08 - 11:51am

ALL DRAWINGS AND WRITTEN MATERIAL APPEARING HEREIN CONSTITUTE THE ORIGINAL AND UNPUBLISHED WORK OF THE ARCHITECT AND THE SAME MAY NOT BE DUPLICATED, USED OR DISCLOSED WITHOUT THE WRITTEN CONSENT OF THE ARCHITECT. COPYRIGHT: NADEL ARCHITECTS INC. ALL RIGHTS RESERVED.

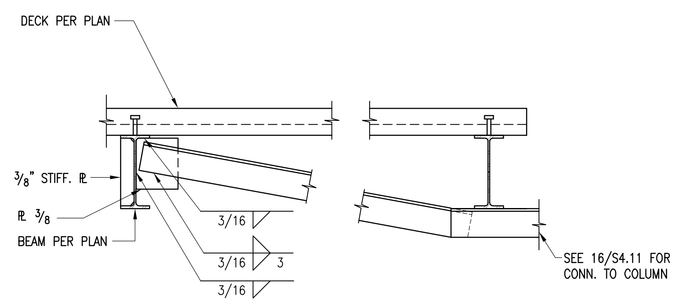

NOTE: SEE 16/S4.11 FOR ITEMS NOT NOTED.

DETAIL
SCALE: 1"=1'-0"
9 / S4.13

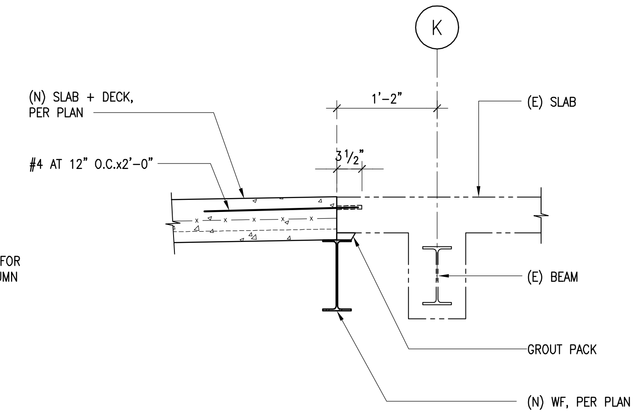

DETAIL
SCALE: 1"=1'-0"
5 / S4.13

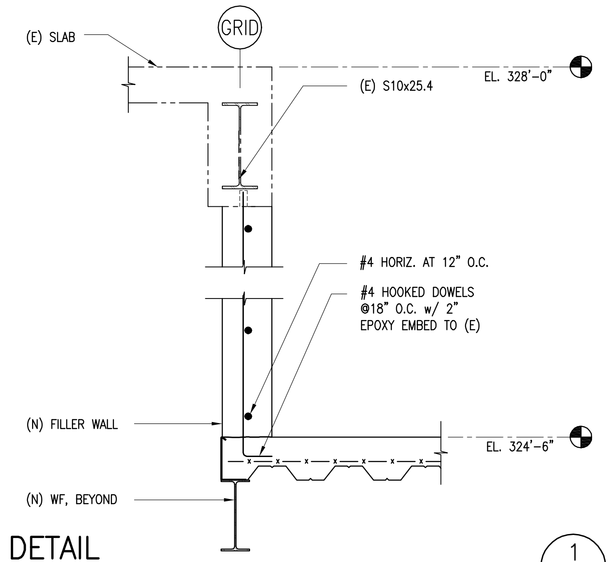

DETAIL
SCALE: 1"=1'-0"
1 / S4.13

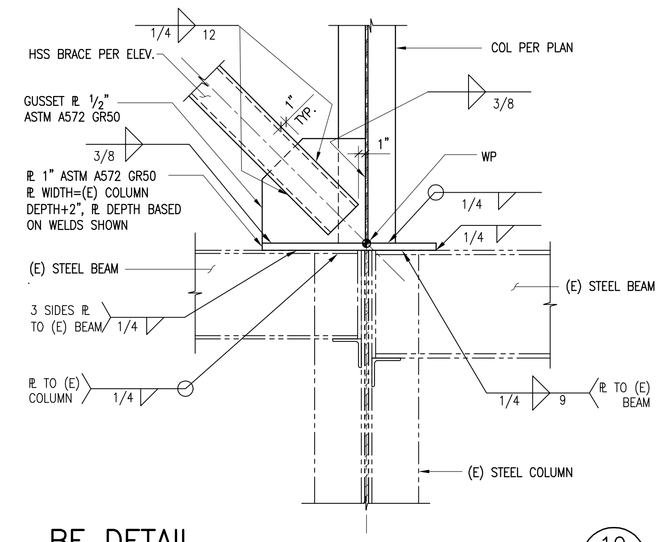

BF DETAIL
SCALE: 1"=1'-0"
10 / S4.13

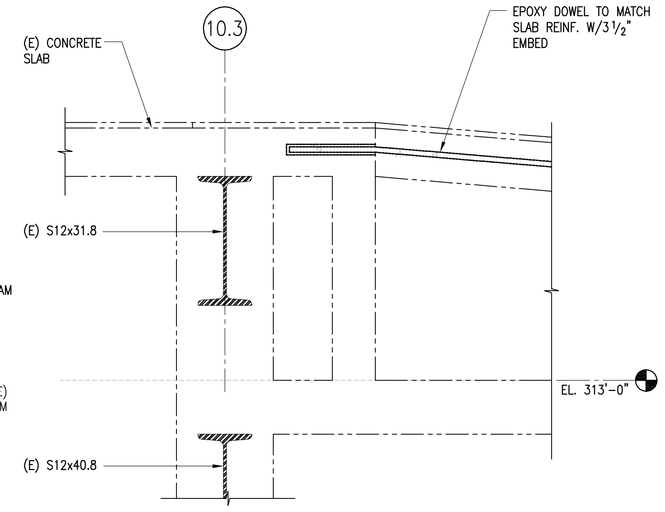

DETAIL
SCALE: 1"=1'-0"
6 / S4.13

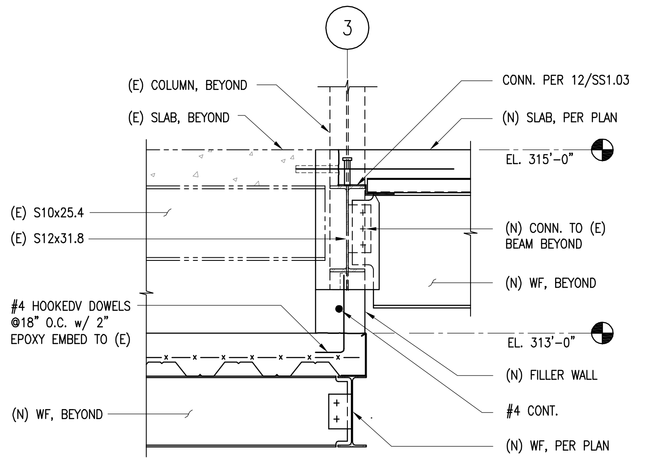

DETAIL
SCALE: 1"=1'-0"
2 / S4.13

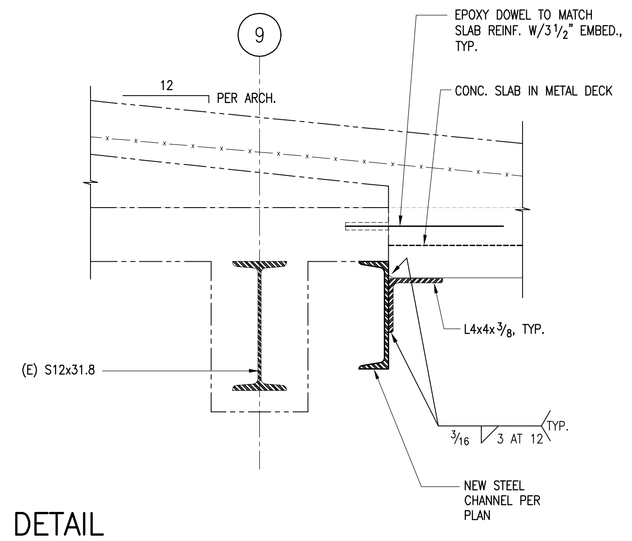

DETAIL
SCALE: 1"=1'-0"
7 / S4.13

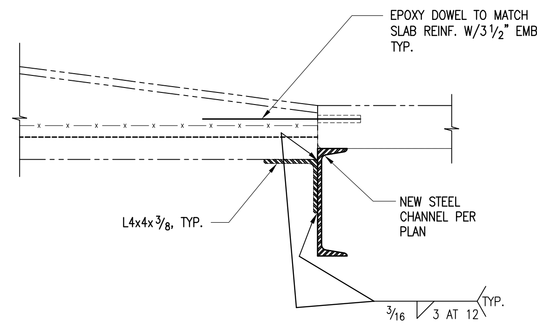

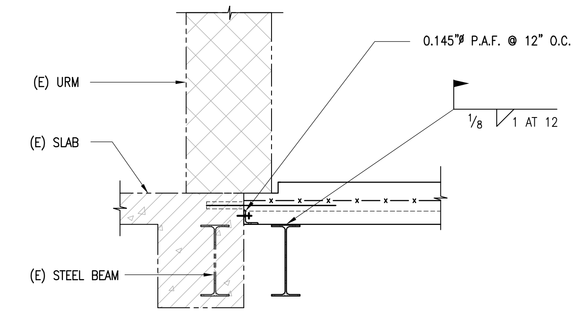

DETAIL
SCALE: 1"=1'-0"
3 / S4.13

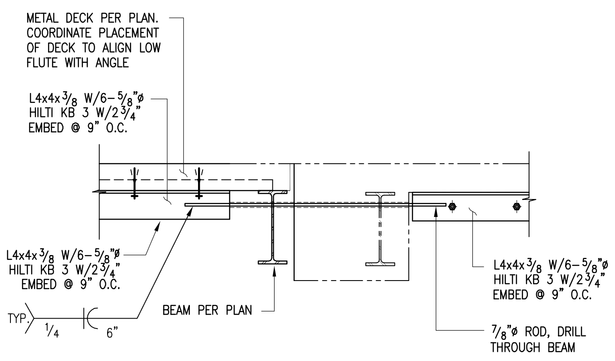

DETAIL
SCALE: 1"=1'-0"
8 / S4.13

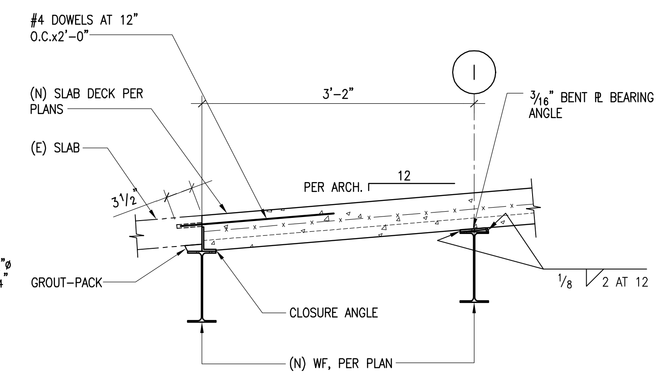

DETAIL
SCALE: 1"=1'-0"
4 / S4.13

NADEL
Architects Inc.

1990 So. Bundy Dr.
Fourth Floor
Los Angeles, CA 90025

T. 310.826.2100
F. 310.826.0182

www.nadelarc.com

CONSULTANT

NABIH YOUSSEF & ASSOCIATES
Structural Engineers
800 Wilshire Boulevard, Suite 200
Los Angeles, California 90017
TEL: (213) 362-0707
FAX: (213) 896-3018

REGISTERED PROFESSIONAL ENGINEER
NABIH F. G. YOUSSEF
No. 2026
Exp. 9/30/09
STRUCTURAL
STATE OF CALIFORNIA

COUNTY OF LOS ANGELES
THE HALL OF JUSTICE
STRUCTURAL RETROFIT PHASE

REVISIONS

1	
2	
3	
4	
5	
6	

DRAWING TITLE

SECTIONS AND DETAILS

SCOPING DOCUMENTS 100% SUBMISSION AUGUST 2010

SCALE :
DATE :
JOB NO : nya.05121.00
SHEET NO.
S4.13

K:\2005\05121-Hall of Justice\S\S4-13.dwg LAST PLOTTED ON Tue 07/08/08 - 11:52am

ALL DRAWINGS AND WRITTEN MATERIAL APPEARING HEREIN CONSTITUTE THE ORIGINAL AND UNPUBLISHED WORK OF THE ARCHITECT AND THE SAME MAY NOT BE DUPLICATED, USED OR DISCLOSED WITHOUT THE WRITTEN CONSENT OF THE ARCHITECT. COPYRIGHT: NADEL ARCHITECTS INC. ALL RIGHTS RESERVED.

ABBREVIATION/DEFINITION

ABBREV	DEFINITION	ABBREV	DEFINITION
ABV	ABOVE	NC	NORMALLY CLOSED
ACD	AUTOMATIC CONTROL DAMPER	NIC	NOT IN CONTACT
AD	ACCESS DOOR	NO	NORMALLY OPEN
AFF	ABOVE FINISHED FLOOR	NO.	NUMBER
AHU	AIR HANDLING UNIT	NTS	NOT TO SCALE
AP	ACCESS PANEL		
ATC	AUTOMATIC TEMPERATURE CONTROL	OBD	OPPOSED BLADE DAMPER
ARCH	ARCHITECT	OSA	OUTSIDE AIR INTAKE
AV	AIR FLOW CONTROL VALVE	OD	OUTSIDE AIR DAMPER
AF	AIR FILTER	OPW	OPERATING WEIGHT
AFF	ABOVE FINISHED FLOOR	OSA	OUTSIDE AIR
AS	AIR SEPERATOR	OPNG	OPENING
BC	BALANCING COCK	P	PUMP
BDD	BACK DRAFT DAMPER	PRSS	PRESSURE
BFV	BUTTERFLY VALVE	PRV	PRESSURE REDUCING VALVE
BHP	BRAKE HORSEPOWER	PS	PRESSURE SWITCH
BI	BACKWARD INCLINED	PSI	POUNDS PER SQUARE INCH
BEL	BELOW	PSIA	PSI ABSOLUTE
BLDG	BUILDING	PSIG	PSI GAUGE
BDS	BLOW DOWN SEPARATOR	PT	PLUGGED TEE
CC	COOLING COIL	PTR	PRESSURE-TEMPERATURE
CD	CEILING DIFFUSER		RELIEF VALVE
CFM	CUBIC FEET PER MINUTE	PVC	POLYVINL CHLORIDE PIPE
CHR	CHILLED WATER RETURN		
CHS	CHILLED WATER SUPPLY	PLBG	PLUMBING
CHW	CHILLED WATER	POC	POINT OF CONNECTION
CLG	CEILING		
COND	CONDENSATE	R	RISE
CONT	CONTINUATION	RLA	RATED LOAD AMPERAGE
COMP	COMPRESSOR	RA	RETURN AIR
CONC	CONCRETE	RAR	RETURN AIR REGISTER
CR	CEILING REGISTER	RD	ROOF DRAINS
CV	CHECK VALVE	REG	REGISTER
CWR	CONDENSER WATER RETURN	RG	RETURN GRILLE
CWS	CONDENSER WATER SUPPLY	RHC	REHEATING COIL
CSG	CLEAN STEAM GENERATOR	RPM	REVOLUTIONS PER MINUTE
		RV	RELIEF VALVE
D	DROP		
DIA	DIAMETER	SA	SUPPLY AIR
DIFF	DIFFUSER	SAD	SUPPLY AIR DIFFUSER
DL	DOOR LOUVER	SAR	SUPPLY AIR REGISTER
DET	DETAIL	SD	SMOKE DAMPER
DN	DOWN	SF	SUPPLY FAN
DR	DRAIN	SMACNA	SHEET METAL & AC NATIONAL ASSOCIATION
DRWG	DRAWING	SFD	COMBINATION SMOKE/FIRE DAMPER
E(NAME)	EXISTING PIPE	SOV	SHUT OFF VALVE
ESP	EXTERNAL STATIC PRESSURE	SQ	SQUARE (FACE)
EA	EXHAUST AIR	SQ. FT	SQUARE FOOT
EAR	EXHAUST AIR REGISTER	ST	SOUND TRAP
EF	EXHAUST FAN	STR	STRAINER
EG	EXHAUST GRILLE	SCR	SCREEN
EJ	EXPANSION JOINT	SR	SIDEWALL REGISTER
EL	ELEVATION	SRV	STERILIZER RELIEF VENT
ENCL	ENCLOSURE	SS	STAINLESS STEEL
EXH	EXHAUST	SHT	SHEET
EXIST	EXISTING	SP	STATIC PRESWSURE
ET	EXPANSION TANK		
F&T	FLOAT AND THERMOSTATIC TRAPS	SW	SWITCH
FLA	FULL LOAD AMPERAGE		
FLEX	FLEXIBLE	TC	TEMPERATURE CONTROL
FC	FAN COIL UNIT	TCP	TEMPERATURE CONTROL PANEL
FD	FIRE DAMPER	TG	TRANSFER GRILLE
FPM	FEET PER MINUTE	TEMP	TEMPERATURE
FIN	FINISH	TYP	TYPICAL
FLR	FLOOR	VTR	VENT THROUGH ROOF
FA	FRESH AIR		
GA	GAUGE		
GALV	GALVANIZED	UC	UNDERCUT (DOOR)
GPM	GALLONS PER MINUTE	UH	UNIT HEATER
GR	GRADE	UTR	UP THROUGH ROOF
GV	GRAVITY RELIEF VENT		
H	HIGH	VAV	VARIABLE AIR VOLUME BOX
HB	HOSE BIBB	VD	VOLUME DAMPER
HC	HEATING COIL	W	WIDE
HDR	HEADER	W/	WITH
HEPA-AF	HIGH EFFICIENCY PARTICULATE AIR FILTERS	W G	WATER GAUGE (PRESSURE)
HHR	HOT WATER RETURN		
HHS	HOT WATER SUPPLY		
HP	HORSEPOWER		
HPR	HIGH PRESSURE RETURN		
HPS	HIGH PRESSURE STEAM		
HVAC	HEATING, VENTILATING AND AIR CONDITIONING		
HW	HOT WATER		
HX	HEAT EXCHANGER		
HC	HEATING COIL		
IB	INVERTED BUCKET TRAPS		
ID	INSIDE DIAMETER		
IE	INVERT ELEVATION		
KW	KILOWATT		
L	LONG		
LRA	LOCKED ROTOR (AMPERAGE)		
LAT	LEAVING AIR TEMPERATURE		
LD	LINEAR DIFFUSER		
LDB	LEAVING DB TEMPERATURE		
LPR	LOW-PRESSURE RETURN		
LPS	LOW-PRESSURE STEAM		
MAV	MANUAL AIR VENT		
MAX	MAXIMUM		
MB	MIXING BOX		
MCC	MOTOR CONTROL CENTER		
MECH	MECHANICAL		
MPR	MEDIUM PRESSURE RETURN		
MPS	MEDIUM PRESSURE STEAM		
MIN	MINIMUM		
MV	MOTOR OPERATED VALVE		
MVD	MANUAL VOLUME DAMPER		

SYMBOL/ABBREVIATION/DEFINITION

SYMBOL	ABBREV.	DEFINITION
X / XXXX		DETAIL TOP – ID NUMBER REFERENCE BOTTOM – SHEET NUMBER
XX / XXXX		SECTION TOP – ID NUMBER REFERENCE BOTTOM – SHEET NUMBER
	SA	SUPPLY AIR DUCT
	RA	RETURN AIR DUCT
	EA	EXHAUST AIR DUCT
CSFD	CSFD	COMBINATION SMOKE/FIRE DAMPER
FD	FD	FIRE DAMPER
	VD	VOLUME DAMPER
M	MD	MOTORIZED DAMPER
R		INCLINED RISE IN DIRECTION OF AIR FLOW
D		INCLINED DROP IN DIRECTION OF AIR FLOW
		EXISTING TO BE REMOVED
		EXISTING TO REMAIN
		ELBOWS WITH TURNING VANES
		TEE DUCT WITH TURNING VANES
		TRANSITION SQUARE TO ROUND
		TRANSITION SQUARE TO SQUARE/ROUND TO ROUND
		FLEXIBLE DUCT
		FLEXIBLE CONNECTION
		RADIUS ELBOW
	POC/POD	POINT OF CONNECTION/POINT OF DISCONNECTION
L	L	DOOR LOUVER
U	U	DOOR UNDERCUT
T	T	THERMOSTAT
H	H	HUMIDISTAT
S	S	WALL SWITCH
SD	SD	SMOKE DETECTOR
DSD	DSD	DUCT SMOKE DETECTOR
	GV	GATE VALVE
	GLV	GLOBE VALVE
	CV	CHECK VALVE
	STR	STRAINER
	BV	BUTTERFLY VALVE
	BLV	BALL VALVE
	U	UNION
	RED	CONCENTRIC REDUCER
		DIRECTION OF FLOW
IA	IA	INSTRUMENT AIR
CHWS	CHWS	CHILLED WATER SUPPLY
CHWR	CHWR	CHILLED WATER RETURN
HHS	HHS	HEATING HOT WATER SUPPLY
HHR	HHR	HEATING HOT WATER RETURN
CD	CD	CONDENSATE DRAIN
HPS	HPS	HIGH PRESSURE STEAM
MPS	MPS	MEDIUM PRESSURE STEAM
LPS	LPS	LOW PRESSURE STEAM
HPC	HPC	HIGH PRESSURE CONDENSATE
MPC	MPC	MEDIUM PRESSURE CONDENSATE
LPC	LPC	LOW PRESSURE CONDENSATE
E(NAME)	E(NAME)	EXISTING PIPE
E(NAME)	E(NAME)	EXISTING PIPE TO BE REMOVE

DRAWING INDEX

SHEET NO.	SHEET TITLE
MP0.01	MECHANICAL LEGEND, NOTES, ABBREVIATIONS, DRAWING LIST AND SCHEDULES
MP0.02	PLUMBING LEGEND, NOTES, ABBREVIATIONS, DRAWING LIST AND SCHEDULES
MP1.00	SITE PLAN
MP2.00	BASEMENT FLOOR PLAN
MP2.01	FIRST FLOOR PLAN
MP2.02	SECOND FLOOR PLAN
MP2.03	THIRD FLOOR PLAN
MP2.04	FOURTH FLOOR PLAN
MP2.05	FIFTH FLOOR PLAN
MP2.06	SIXTH FLOOR PLAN
MP2.07	SEVENTH FLOOR PLAN
MP2.08	EIGHT FLOOR PLAN
MP2.09	NINTH FLOOR PLAN
MP2.10	TENTH FLOOR PLAN
MP2.11	ELEVENTH FLOOR PLAN NOT USED
MP2.12	TWELFTH FLOOR PLAN
MP2.13	THIRTEENTH FLOOR PLAN NOT USED
MP2.14	FOURTEENTH FLOOR PLAN
MP2.15	PENTHOUSE FLOOR PLAN
MP2.16	ELEV. MACHINE ROOM PLAN
MP2.17	ELEV. MACHINE ROOM ROOF PLAN
MP3.00	MECHACICAL RISER DIAGRAM
MP3.01	PLUMBING RISER DIAGRAM – STORM DRAIN
MP3.02	PLUMBING RISER DIAGRAM – FIRE PROTECTION
MP4.00	MECHACICAL DETAILS
MP4.01	PLUMBING DETAILS

KEY PLAN

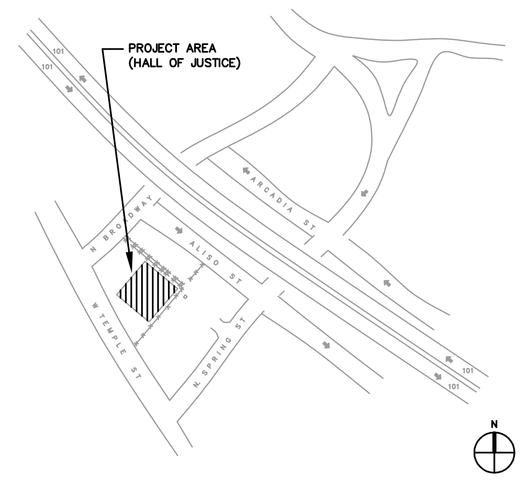

GRAVITY RELIEF HOOD SCHEDULE

I. D. NUMBER	MANUFACTURER	MODEL	TYPE	LOCATION	SERVICE	CFM	STATIC PRESSURE (IN WG)	FPM	"TW" THROAT WIDTH (IN)	"LW" THROAT LEGTH (IN)	THROAT AREA (FT2)	WEIGHT	REMARKS
RV 1	GREENHECK	FHR	HOODED GRAVITY RELIEF	ROOF	STAIRS	20,000	0.135	749.2	62	62	26.69	340	WITH BACKDRAFT DAMPER
RV 2	GREENHECK	FHR	HOODED GRAVITY RELIEF	ROOF	STAIRS	20,000	0.135	749.2	62	62	26.69	340	WITH BACKDRAFT DAMPER

NADEL
Architects Inc.

1990 So. Bundy Dr.
Fourth Floor
Los Angeles, CA 90025

T. 310.826.2100
F. 310.826.0182

www.nadelarc.com

CONSULTANT

REGISTERED PROFESSIONAL ENGINEER
ALKATOR C. YU SON
No. 22542
Exp. 12/31/01
MECHANICAL
STATE OF CALIFORNIA

COUNTY OF LOS ANGELES
THE HALL OF JUSTICE
STRUCTURAL RETROFIT PHASE

REVISIONS

1	
2	
3	
4	
5	
6	

DRAWING TITLE

MECHANICAL LEGEND, ABBREVIATIONS, SCHEDULES DRAWING LIST AND

SCOPING DOCUMENTS 100% SUBMISSION AUGUST 2010

SCALE : NONE
DATE :
JOB NO :2306-154-00
SHEET NO.

MP0.01

ALL DRAWINGS AND WRITTEN MATERIAL APPEARING HEREIN CONSTITUTE THE ORIGINAL AND UNPUBLISHED WORK OF THE ARCHITECT AND THE SAME MAY NOT BE DUPLICATED, USED OR DISCLOSED WITHOUT THE WRITTEN CONSENT OF THE ARCHITECT. COPYRIGHT: NADEL ARCHITECTS INC. ALL RIGHTS RESERVED.

PLUMBING SYMBOL / ABBREVIATION / DEFINITION

SYMBOL	ABBREV.	DEFINITION
		EXISTING FIXTURE OR EQUIPMENT AND APPURTENANCES IN GENERAL RESTROOM/JANITOR/SHOWER/LAUNDRY/ LOCKER/BREAK/MISCELLANEOUS ROOM TO BE REMOVED
		EXISTING RISER, PIPING, SUPPORT, VALVE, EQUIPMENT, AND APPURTENANCES IN CHASE/CRAWL AREA OR ROOM TO BE REMOVED
		EXISTING EQUIPMENT, FIXTURE, PIPING, VALVE, CONTROL, VALVES, SUPPORT, TANKS, AND APPURTENANCES IN MECHANICAL ROOM TO BE REMOVED
		EXISTING FIRE SPRINKLER RISER, HEADS, HALON, CYLINDER, VALVES, SUPPORT, TANKS, CONTROLS, AND APPURTENANCES IN COMPUTER/CORRIDOR/HALLWAY/GENERAL ROOM
		EXISTING PIT AREA TO REMAIN SHALL BE CLEANED AND WATER FREE
		EXISTING FIXTURE OR EQUIPMENT TO REMAIN OR TO SALVAGE BY OWNER
(E)SD	(E)SD	EXISTING STORM DRAIN (SD) PIPING TO REMAIN
	POC/POD	POINT OF CONNECTION OR DISCONNECTION
	GV, GLV	GATE OR GLOBE VALVE
	CV	CHECK VALVE
		FLANGE CONNECTION
	FCO	FLOOR CLEANOUT
	CO	CLEANOUT
		CAPPED END
		PLUGGED END
		PIPE UP
		PIPE DOWN
(E) (NAME)	(E)	EXISTING PIPE
(E)W	(E)W	EXISTING WASTE PIPE
		DEMOLITION (REMOVE)
SD 1	SD 1	RISER CALLOUT RISER NUMBER
OD 1	OD 1	RISER CALLOUT RISER NUMBER

ABBREVIATION / DEFINITION

ABBREV.	DEFINITION
ABV	ABOVE
ARCH	ARCHITECT
BEL	BELOW
BLDG	BUILDING
BP	BOOSTER PUMP
CB	CATCH BASIN
CI	CAST IRON
CLG	CEILING
CONC	CONCRETE
CONT	CONTINUATION
CU	COPPER
CW	COLD WATER
DET	DETAIL
DWG	DRAWING
EQPT.	EQUIPMENT
EXIST (E)	EXISTING
FDC	FIRE DEPARTMENT CONNECTION
FE	FIRE EXTINGUISHER
FIN	FINISH
FHC	FIRE HOSE CABINET
FHV	FIRE HOSE VALVE
FLR	FLOOR
FP	FIRE PROTECTION
GALV	GALVANIZED
HW	HOT WATER
IE	INVERT ELEVATION
MECH	MECHANICAL
(N)	NEW
OD	OVERFLOW DRAIN
PLBG	PLUMBING
RD	ROOF DRAIN
RI	ROUGH-IN
SD	STORM DRAIN
SHT	SHEET
SOV	SHUT OFF VALVE
SS	STAINLESS STEEL
SK	SINK
THRU	THROUGH
TYP	TYPICAL
V	VENT
VAC	VACUUM (HOUSEKEEPING)
VTR	VENT THROUGH ROOF
WH	WATER HEATER
W/	WITH

GENERAL NOTES

1. EXAMINATION OF SITE AND VERIFICATION OF CONDITIONS: CONTRACTOR SHALL EXAMINE THE SITE AND BECOME ACQUAINTED WITH THE EXISTING CONSTRUCTION AND THE CONDITIONS UNDER WHICH THE WORK IS TO BE CARRIED OUT. UPON SUBMITTING A BID; CONTRACTOR SHALL BE HELD TO HAVE MADE SUCH EXAMINATION, AND NO ALLOWANCE FOR EXTRAS WILL BE ALLOWED FOR ANY ERROR OR OVERSIGHT RESULTING FROM THE THE CONTRACTOR'S UNFAMILIARITY WITH THE SITE OR EXISTING CONDITIONS. CONTRACTOR SHALL OBTAIN ACCURATE FIELD DIMENSIONS OF ALL RELATED AREAS, SPACES, OPENINGS, LEVELS, AND ITEMS OF ADJACENT WORK AND, BEFORE COMMENCING WORK, REPORT TO THE ARCHITECT IN WRITING ALL DISCREPANCIES BETWEEN THE CONTRACT
2. UTILITIES: THE CONTRACTOR SHALL MAKE ALL ARRANGEMENTS WITH THE LA COUNTY PRIOR TO CUTTING OR DISCONNECTION. THIS CONTRACTOR SHALL REASSURE THAT THE EXISTING OPERATION AT ADJACENT BUILDING OR CENTRAL PLANT SHALL NOT DISRUPT THE NORMAL OPERATION. IF IT HAPPENS, IT SHALL BE THE CONTRACTOR'S EXPENSE TO MAKE FULLY OPERATIONAL THE NORMAL OPERATION OF THE ADJACENT BUILDING.
3. INTERFERENCE: ALL STORM DRAIN SYSTEM SHALL BE NEW TO MAKE FULLY OPERATIONAL. THE PLUMBING CONTRACTOR SHALL PRESSURE TEST, ANCHORING SHALL MEET CODE FOR SEISMIC.
4. CODE COMPLIANCE: ALL WORK AND MATERIAL SHALL BE PERFORMED AND INSTALLED IN COMPLIANCE WITH THE FOLLOWING CODES AS ADOPTED AND AMENDED BY THE INSPECTING AUTHORITY. NOTHING IN THESE DRAWINGS IS TO BE CONSTRUCTED TO PERMIT WORK NOT CONFORMING TO THESE CODES OR OTHER APPLICABLE TO THIS PROJECT:
   - A. CALIFORNIA BUILDING CODE – 2001
   - B. CALIFORNIA MECHANICAL CODE – 2001
   - C. CALIFORNIA PLUMBING CODE – 2001
   - D. SEISMIC
   - E. CALIFORNIA ADMINISTRATIVE CODE
   - F. L.A. COUNTY OF BUILDING & SAFETY MECH. TESTING LAB.
5. HISTORIC STRUCTURE: THE CONTRACTOR SHALL PRESERVE HISTORIC STRUCTURE OR MONUMENTS PER THE DIRECTION OF THE ARCHITECT. ALL PLUMBING WORK SHALL BE CAREFULLY EXAMINED PRIOR TO WORK IN THIS AREA. MARBLED TILED WALL IN THE GENERAL RESTROOM AREA SHALL BE SALVAGED PER THE DIRECTION OF THE ARCHITECT.

PIPE MATERIAL SCHEDULE

SERVICE	MATERIAL	–	–	COPPER TYPE L 95/5 SOLDER	BLACK STEEL SCH 40	COPPER TYPE L SILVER SOLDER	CAST IRON SOIL PIPE & FITTING OR COPPER DWV BRONZE FITTING	BLACK STEEL SCH 40 VICTAULIC COUPLING	GALV. STL. SCH. 40 W/CI. THREADED DWV FITTING	GALV. STL. SCH 40 THREADED FITTINGS	SCH 40 PVC W/PREPRATED HOLES	COPPER TYPE 'L' OZ CLEAN TO ASTM B-819, NFPA 99 COMPLIANT	SILVER SOLDER DOUBLE WALL BELL GRIDE	DUCTILE IRON W/ THRUST BLOCKS	COPPER TYPE 'ACR' L' TO ASTM B-88; B-280 SILVER SOLDER	REMARKS
	INSIDE															
	OUTSIDE															
	INSIDE															
	OUTSIDE															
STORM & OVERFLOW (SD) (OD)	INSIDE					•										DESIGN BASED ON 6"/HR (LA COUNTY)
	OUTSIDE					•										
FIRE PROTECTION (FP)	INSIDE						•									
	OUTSIDE						•									

EQUIPMENT SCHEDULE

I. D. NUMBER	LOCATION	SERVICE	CATALOG DATA		STORAGE TANK			SELECTION		PUMP	MOTOR			REQUIRED EMERG. POWER	OPERATING WEIGHT (LB.)	STEAM (LB./HR)	REMARKS
			COMPANY NAME	MODEL TYPE	CAPACITY (GAL.)	SIZE DIA x L	WORKING PRESS. (PSI)	FLOW (GPM)	HEAD (PSI)	WORKING PRESS. (PSI)	HP	RPM	VOLT/PH/HZ				
RP 1	RECEIVER PUMP SET	FIRE DRAIN, SD, OVER FLOW	SPIRAX SARCO	GB4D711	71	24–48	–	18	40	–	3/4"	–	115/1/60	–	900	–	CYLIN DRICAL WELDED STEEL W/ANGLE IRON LEGS ANCHORED TO FLR. COMPLETE W/FLOAT CONTROL SET FOR BOTH PUMP COULD BE ON. PROVIDE SOV & CV ON EACH DISCHARGE, VENT AT +5'–0" BELOW ELBOW DM.
RD 1	ROOF DRAIN	SD	JR SMITH	1010Y–R–C–CID	–	–	–	–	–	–	–	–	–	–	–	–	CAST IRON BODY AND CAST IRON DOME STRAINER, SUMP RECIEVER, UNDER DECK CLAMP.
OD 1	OVERFLOW DRAIN	OD	JR SMITH	1080Y–R–C–CID	–	–	–	–	–	–	–	–	–	–	–	–	CAST IRON BODY AND CAST IRON DOME STRAINER SUMP RECEIVER, NDER DECK CLAMP, 2" WATER DAM.

DEMOLITION NOTES

1. DEMOLITION OF EXISTING BUILDING AND MISCELLANEOUS SITE ITEMS IN NEW CONSTRUCTION AREA AS INDICATED ON ARCHITECTURAL. DEMOLITION DRAWING SHALL BE EXAMINED FOR PLUMBING UTILITIES AND SHALL BE CAPPED OR PLUGGED OR RE–ROUTED TO MAINTENANCE SERVICE AS REQUIRED TO OUTSIDE AREA OF NEW WORK. PROVIDE AS–BUILT DRAWING OF ITEM ABOVE INDICATING LOCATION, ELEVATION, SIZE, DIRECTION OF FLOW, AND SERVICE. EXISTING STORM DRAIN SHALL REMAIN, MAKE FULLY OPERATIONAL, TEST FOR LEAKS, & SHALL BE ANCHORED AND BRACED FOR SEISMIC RESTRAINT. BRACING OF STORM DRAIN AND FIRE PROTECTION PIPING SHALL MEET CURRENT UBC AND TITLE 24 REQUIREMENTS. ALL PIPING IN THE HISTORIC AREA AND/OR ELEVATOR LOBBY SHALL NOT BE DISTURBED AND SHALL BE COORDINATED WITH ARCHITECT PRIOR TO DEMOLITION.

FIRE PROTECTION NOTES

1. EXISTING SHALL BE DESIGNED FOR A COMPLETE FIRE PROTECTION SYSTEM, EXCEPT ONLY (INCLUDING PUMPING SYSTEM, DETECTOR CHECK, FDC, PUMP TEST DISCHARGE PIPE SIZING ETC.) THE MAIN SERVICE ASSEMBLED SHALL BE INSTALLED AS INDICATED ON PLAN.

NADEL
Architects Inc.

1990 So. Bundy Dr.
Fourth Floor
Los Angeles, CA 90025

T. 310.826.2100
F. 310.826.0182

www.nadelarc.com

CONSULTANT

REGISTERED PROFESSIONAL ENGINEER
ADAITOR C. YUSON
No.22542
Exp. 12/31/07
MECHANICAL
STATE OF CALIFORNIA

COUNTY OF LOS ANGELES
THE HALL OF JUSTICE
STRUCTURAL RETROFIT PHASE

REVISIONS

1	
2	
3	
4	
5	
6	

DRAWING TITLE

PLUMBING LEGEND, NOTES, ABBREVIATIONS, SCHEDULES DRAWING LIST AND

SCOPING DOCUMENTS 100% SUBMISSION AUGUST 2010

SCALE : NONE
DATE :
JOB NO :2306-154-00
SHEET NO.

MP0.02

ALL DRAWINGS AND WRITTEN MATERIAL APPEARING HEREIN CONSTITUTE THE ORIGINAL AND UNPUBLISHED WORK OF THE ARCHITECT AND THE SAME MAY NOT BE DUPLICATED, USED OR DISCLOSED WITHOUT THE WRITTEN CONSENT OF THE ARCHITECT. COPYRIGHT: NADEL ARCHITECTS INC. ALL RIGHTS RESERVED.

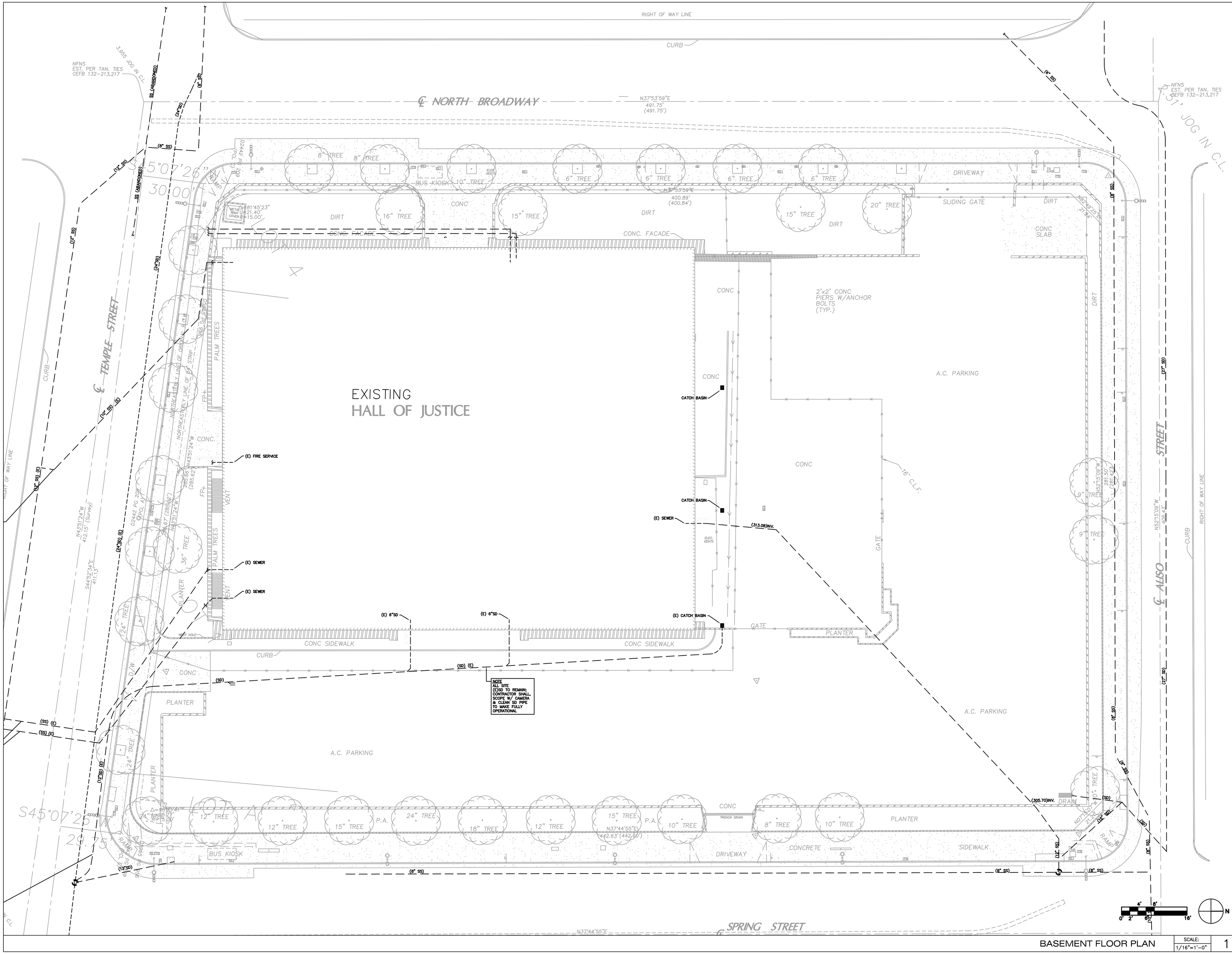

BASEMENT FLOOR PLAN | SCALE: 1/16"=1'-0" | 1

ALL DRAWINGS AND WRITTEN MATERIAL APPEARING HEREIN CONSTITUTE THE ORIGINAL AND UNPUBLISHED WORK OF THE ARCHITECT AND THE SAME MAY NOT BE DUPLICATED, USED OR DISCLOSED WITHOUT THE WRITTEN CONSENT OF THE ARCHITECT. COPYRIGHT: NADEL ARCHITECTS INC. ALL RIGHTS RESERVED.

NADEL
Architects Inc.

1990 So. Bundy Dr.
Fourth Floor
Los Angeles, CA 90025

T. 310.826.2100
F. 310.826.0182

www.nadelarc.com

CONSULTANT

T M A D TAYLOR & GAINES
• STRUCTURAL • MECHANICAL • ELECTRICAL • CIVIL

100 South Anaheim Boulevard, Suite 150
Anaheim, California 92805
Phone: 714.490.5555
Fax: 714.490.5560
Project No. 2306-154-00

REGISTERED PROFESSIONAL ENGINEER
ADAITOR C. YUSON
No. 22542
Exp. 12/31/07
MECHANICAL
STATE OF CALIFORNIA

COUNTY OF LOS ANGELES
THE HALL OF JUSTICE
STRUCTURAL RETROFIT PHASE

REVISIONS

1	
2	
3	
4	
5	
6	

DRAWING TITLE

PLUMBING SITE PLAN

SCALE : 1/8"=1'-0"
DATE :
JOB NO :2306-154-00
SHEET NO.

MP1.00

SCOPING DOCUMENTS 100% SUBMISSION AUGUST 2010

ALL DRAWINGS AND WRITTEN MATERIAL APPEARING HEREIN CONSTITUTE THE ORIGINAL AND UNPUBLISHED WORK OF THE ARCHITECT AND THE SAME MAY NOT BE DUPLICATED, USED OR DISCLOSED WITHOUT THE WRITTEN CONSENT OF THE ARCHITECT. COPYRIGHT: NADEL ARCHITECTS INC. ALL RIGHTS RESERVED.

BASEMENT FLOOR PLAN

SCALE: 1/8"=1'-0"

1

CONSTRUCTION NOTES

1. FIRE RISER. SERVICE FOR EACH FLR. SEE DET. 1&2/P4.1 & RISER DIAGRAM SHT M2.02
2. REMOVE ANY EXISTING PIPING, FIXTURE, EQUIP. VENT RELATED TO ROOF. INDICATED OR NOT, UNLESS OTHERWISE NOTED.
3. REMOVE ALL EXISTING ROOF DRAINS AND DOWN SPOUT PIPING UNLESS OTHERWISE NOTED.
4. EXISTING LEDGE DRAIN SHALL BE CLEANED, REPAIRED & SD PIPE REPLACED AS REQUIRED TO MAKE FULLY OPERATIONAL. AND MINIMUM CODE TESTED FOR LEAKES UNLESS OTHERWISE NOTED OR INDICATED ON PLANS.

(E)8"W
MH
(E)18'-6"
(E)CB
(E)10"
UTILITIES CAPPED/ IN TUNNEL
(E)4" HOUSEKEEPING VAOUUM
(E)VAC
MAINTAIN (E) DOOR TO UTILITES TUNNEL OPENING
(N) CONCRETE SHEAR WALL
(E) ELECTRICAL PULLBOX
STAIR #5
(E) OIL SWITCH BREAKER
(E) ELECTRICAL SUBSTATION
(N) 24" THICK CONCRETE SHEAR WALL
FIRE RISER
6"DS
(E)6"SD RISER
(E)6"DS RISER
PROVIDE NEW PIT AND RE-LOCATE (E) DRAIN HERE.
HISTORIC MATERIAL STORAGE AREA (DO NOT DISTURB).
(E)6"SD RISER
(E)4"
(E)6"FDC & (E)FHV TO REMAIN
MATCH EXISTING 3'-2x3"-2 WALL OPENING, TYP.
CORE DRILL (TYP.)
RECEIVER W/ DUPLEX PUMPS SET ON FLR.
FLANGE & CV
(E)6"FP
(E) 6"
(E)FP
(E)6"
(N) CONCRETE SLAB AND FOOTING.
(E) 12"
(E)SD
(E) 12"
(E)FP
(E)6"
(E)6"
(E)6"

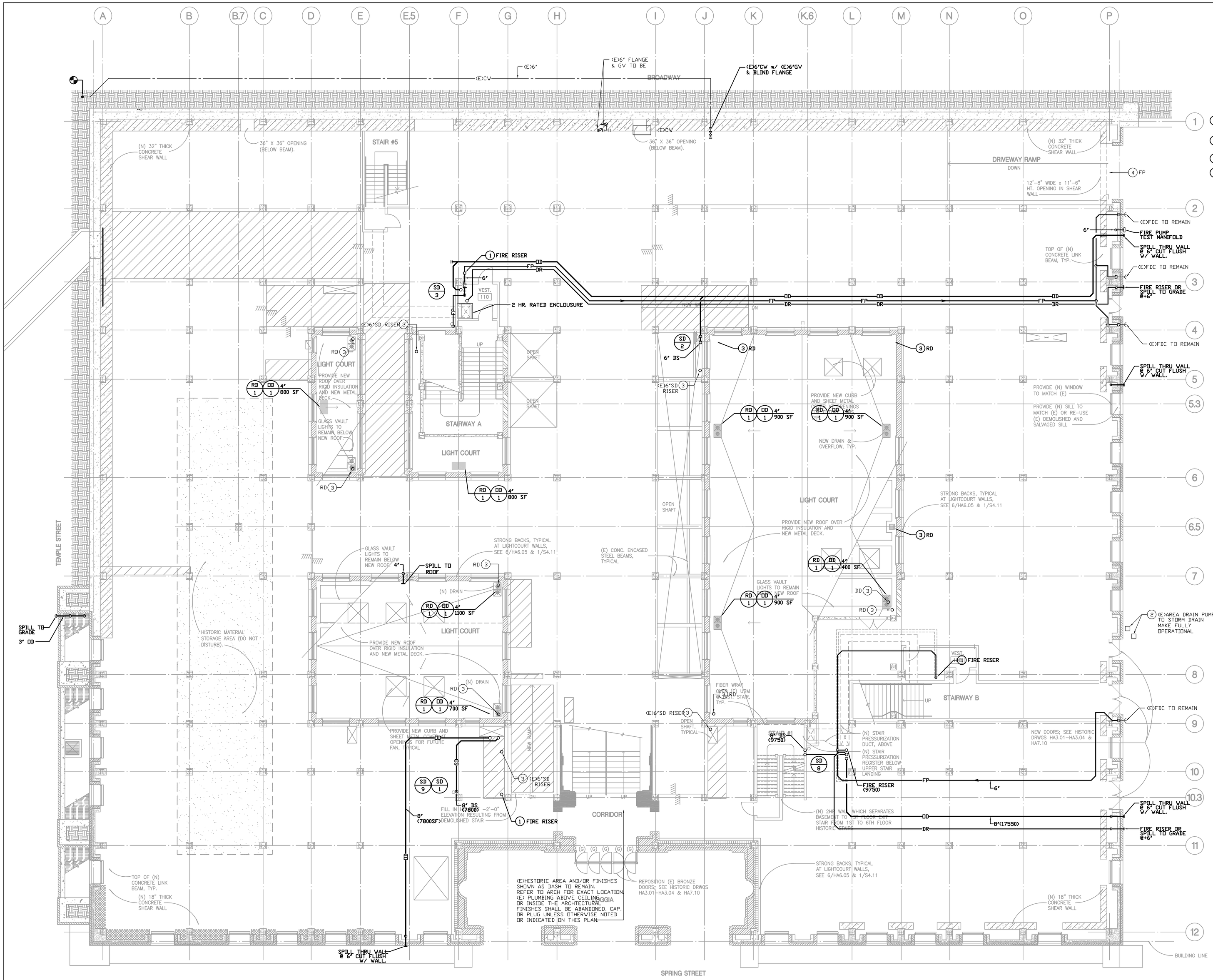

CONSTRUCTION NOTES

1. FIRE RISER, SERVICE FOR EACH FLR., SEE DET. 1&2/P4.1 & RISER DIAGRAM SHT MP3.02
2. REMOVE ANY EXISTING PIPING, FIXTURE, EQUIP. VENT RELATED TO ROOF, INDICATED OR NOT, UNLESS OTHERWISE NOTED.
3. REMOVE ALL EXISTING ROOF DRAINS AND DOWN SPOUT PIPING UNLESS OTHERWISE NOTED.
4. EXISTING LEDGE DRAIN SHALL BE CLEANED, REPAIRED & SD PIPE REPLACED AS REQUIRED TO MAKE FULLY OPERATIONAL AND MINIMUM CODE TESTED FOR LEAKES UNLESS OTHERWISE NOTED OR INDICATED ON PLANS.

FIRST FLOOR PLAN | SCALE: 1/8"=1'-0" | 1

NADEL Architects Inc.

1990 So. Bundy Dr.
Fourth Floor
Los Angeles, CA 90025

T. 310.826.2100
F. 310.826.0182

www.nadelarc.com

CONSULTANT

T M A D
TAYLOR
&GAINES
• STRUCTURAL
• MECHANICAL
• ELECTRICAL
• CIVIL

100 South Anaheim Boulevard, Suite 150
Anaheim, California 92805
Phone: 714.490.5555
Fax: 714.490.5560
Project No. 2306-154-00

REGISTERED PROFESSIONAL ENGINEER
ALAITOR C. YUSON
No.22542
Exp. 12/31/07
MECHANICAL
STATE OF CALIFORNIA

COUNTY OF LOS ANGELES
THE HALL OF JUSTICE
STRUCTURAL RETROFIT PHASE

REVISIONS

△	
△	
△	
△	
△	
△	

DRAWING TITLE

FIRST FLOOR PLAN

SCOPING DOCUMENTS 100% SUBMISSION AUGUST 2010

SCALE : 1/8"=1'-0"
DATE :
JOB NO :2306-154-00
SHEET NO.

MP2.01

ALL DRAWINGS AND WRITTEN MATERIAL APPEARING HEREIN CONSTITUTE THE ORIGINAL AND UNPUBLISHED WORK OF THE ARCHITECT AND THE SAME MAY NOT BE DUPLICATED, USED OR DISCLOSED WITHOUT THE WRITTEN CONSENT OF THE ARCHITECT. COPYRIGHT: NADEL ARCHITECTS INC. ALL RIGHTS RESERVED.

ALL DRAWINGS AND WRITTEN MATERIAL APPEARING HEREIN CONSTITUTE THE ORIGINAL AND UNPUBLISHED WORK OF THE ARCHITECT AND THE SAME MAY NOT BE DUPLICATED, USED OR DISCLOSED WITHOUT THE WRITTEN CONSENT OF THE ARCHITECT. COPYRIGHT: NADEL ARCHITECTS INC. ALL RIGHTS RESERVED.

SECOND FLOOR PLAN | SCALE: 1/8"=1'-0" | 1

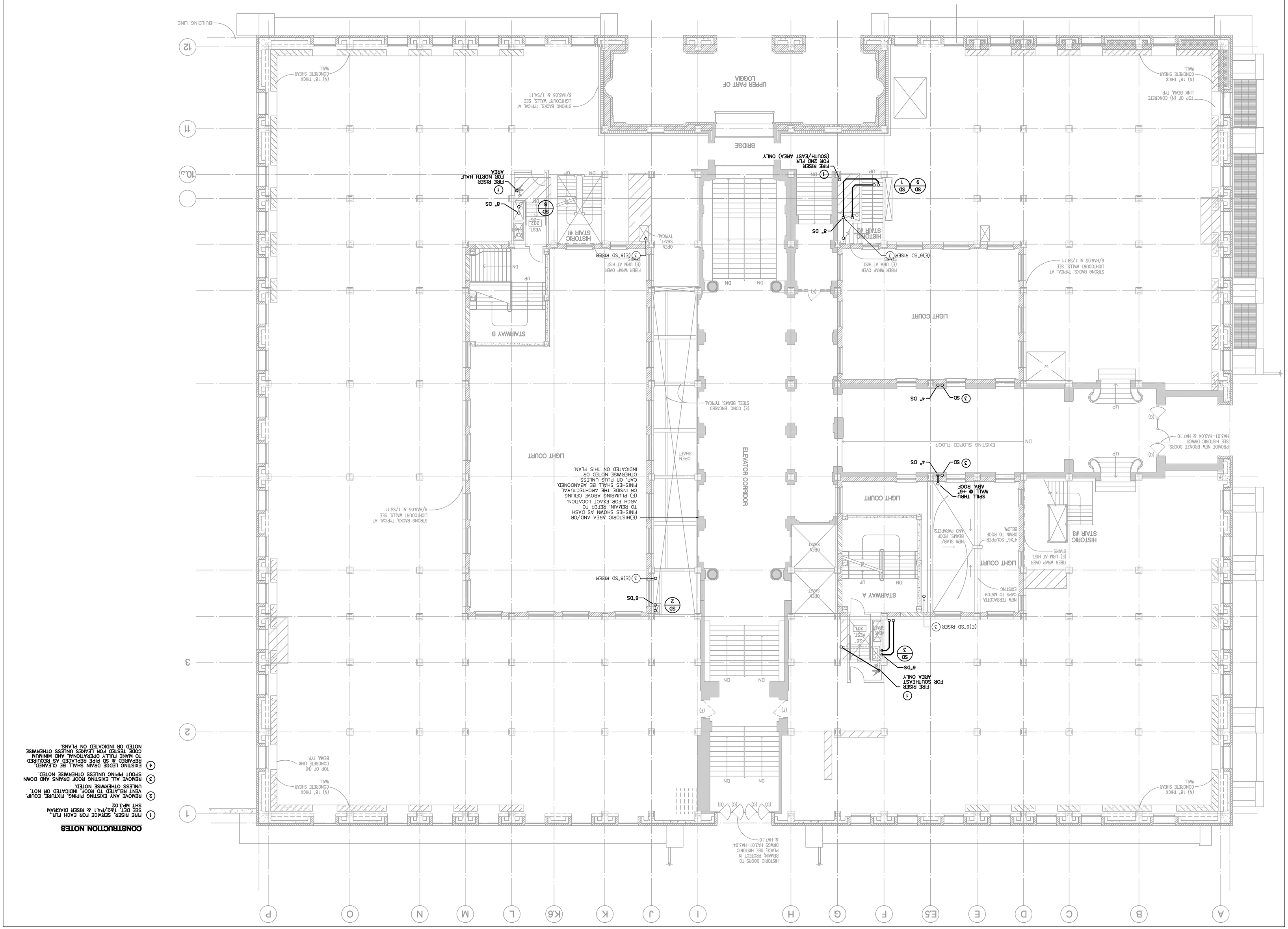

CONSTRUCTION NOTES

1. FIRE RISER, SERVICE FOR EACH FLR., SEE DET. 1&2/P4.1 & RISER DIAGRAM SHT MP3.02
2. REMOVE ANY EXISTING PIPING, FIXTURE, EQUIP. VENT RELATED TO ROOF, INDICATED OR NOT, UNLESS OTHERWISE NOTED.
3. REMOVE ALL EXISTING ROOF DRAINS AND DOWN SPOUT PIPING UNLESS OTHERWISE NOTED.
4. EXISTING LEDGE DRAIN SHALL BE CLEANED, REPAIRED & SD PIPE REPLACED AS REQUIRED TO MAKE FULLY OPERATIONAL AND MINIMUM CODE TESTED FOR LEAKES UNLESS OTHERWISE NOTED OR INDICATED ON PLANS.

NADEL Architects Inc.
1990 So. Bundy Dr.
Fourth Floor
Los Angeles, CA 90025
T. 310.826.2100
F. 310.826.0182
www.nadelarc.com

CONSULTANT

T M A D
TAYLOR & GAINES
• STRUCTURAL • MECHANICAL • ELECTRICAL • CIVIL

100 South Anaheim Boulevard, Suite 150
Anaheim, California 92805
Phone: 714.490.5555
Fax: 714.490.5560
Project No. 2306-154-00

REGISTERED PROFESSIONAL ENGINEER
ADOLFO C. YUSON
No. 22542
Exp. 12/31/12
STATE OF CALIFORNIA

REVISIONS

DRAWING TITLE

COUNTY OF LOS ANGELES

THE HALL OF JUSTICE

STRUCTURAL RETROFIT PHASE

SCOPING DOCUMENTS 100% SUBMISSION AUGUST 2010

SECOND FLOOR PLAN

SCALE : 1/8"=1'-0"
DATE :
JOB NO : 2306-154-00
SHEET NO.
MP2.02

ALL DRAWINGS AND WRITTEN MATERIAL APPEARING HEREIN CONSTITUTE THE ORIGINAL AND UNPUBLISHED WORK OF THE ARCHITECT AND THE SAME MAY NOT BE DUPLICATED, USED OR DISCLOSED WITHOUT THE WRITTEN CONSENT OF THE ARCHITECT. COPYRIGHT: NADEL ARCHITECTS INC. ALL RIGHTS RESERVED.

THIRD FLOOR PLAN

SCALE: 1/8"=1'-0" | 1

N

0" 2" 4' 8' 16'

BUILDING LINE

(N) 18" THICK CONCRETE SHEAR WALL

TOP OF (N) CONCRETE LINK BEAM, TYP.

STRONG BACKS, TYPICAL AT LIGHTCOURT WALLS. SEE 6/HA6.03 & 1/S4.11

2 STEPS ±14"

LIGHT COURT

HISTORIC STAIR #2

FIBER WRAP OVER (E) URM AT HIST. STAIRS, TYP.

HISTORIC STAIR #3

STAIRWAY A

STAIRWAY B

CORRIDOR

(E) CONC. ENCASED STEEL BEAMS, TYPICAL

OPEN SHAFT

VEST. 302

VEST. 301

FIRE RISER

(E)6"SD RISER

6"DS

8"DS

6"SD

4"SD

SD 1 2 3 4 8 9

TYPICAL

+10"

UP DN

12 11 10.3 10 9 8 7 6 5 4 3 2 1

A B C D E F G H I J K K6 L M N O P

CONSTRUCTION NOTES

1. FIRE RISER. SERVICE FOR EACH FLR., SEE DET. 1&2/P4.1 & RISER DIAGRAM SHT MP3.02
2. REMOVE ANY EXISTING PIPING, FIXTURE, EQUIP. VENT RELATED TO ROOF, INDICATED OR NOT, UNLESS OTHERWISE NOTED.
3. REMOVE ALL EXISTING ROOF DRAINS AND DOWN SPOUT PIPING UNLESS OTHERWISE NOTED.
4. EXISTING LEDGE DRAIN SHALL BE CLEANED, REPAIRED & SD PIPE REPLACED AS REQUIRED TO MAKE FULLY OPERATIONAL AND MINIMUM CODE TESTED FOR LEAKES UNLESS OTHERWISE NOTED OR INDICATED ON PLANS.

NADEL Architects Inc.
1990 So. Bundy Dr.
Fourth Floor
Los Angeles, CA 90025
T. 310.826.2100
F. 310.826.0182
www.nadelarc.com

CONSULTANT

TMAD
STRUCTURAL
MECHANICAL
ELECTRICAL
PLUMBING
GAINES
CIVIL

100 South Anaheim Boulevard, Suite 150
Anaheim, California 92805
Phone: 714.490.5555
Fax: 714.490.5060

Project No. 2306-154-00

REGISTERED PROFESSIONAL ENGINEER
KENNETH C. YOUNG
No. 25542
STATE OF CALIFORNIA

COUNTY OF LOS ANGELES

THE HALL OF JUSTICE

STRUCTURAL RETROFIT PHASE

REVISIONS

1	
2	
3	
4	
5	
6	
7	

DRAWING TITLE

THIRD FLOOR PLAN

SCALE : 1/8"=1'-0"
DATE :
JOB NO : 2306-154-00
SHEET NO.

MP2.03

SCOPING DOCUMENTS 100% SUBMISSION AUGUST 2010

ALL DRAWINGS AND WRITTEN MATERIAL APPEARING HEREIN CONSTITUTE THE ORIGINAL AND UNPUBLISHED WORK OF THE ARCHITECT AND THE SAME MAY NOT BE DUPLICATED, USED OR DISCLOSED WITHOUT THE WRITTEN CONSENT OF THE ARCHITECT. COPYRIGHT: NADEL ARCHITECTS INC. ALL RIGHTS RESERVED.

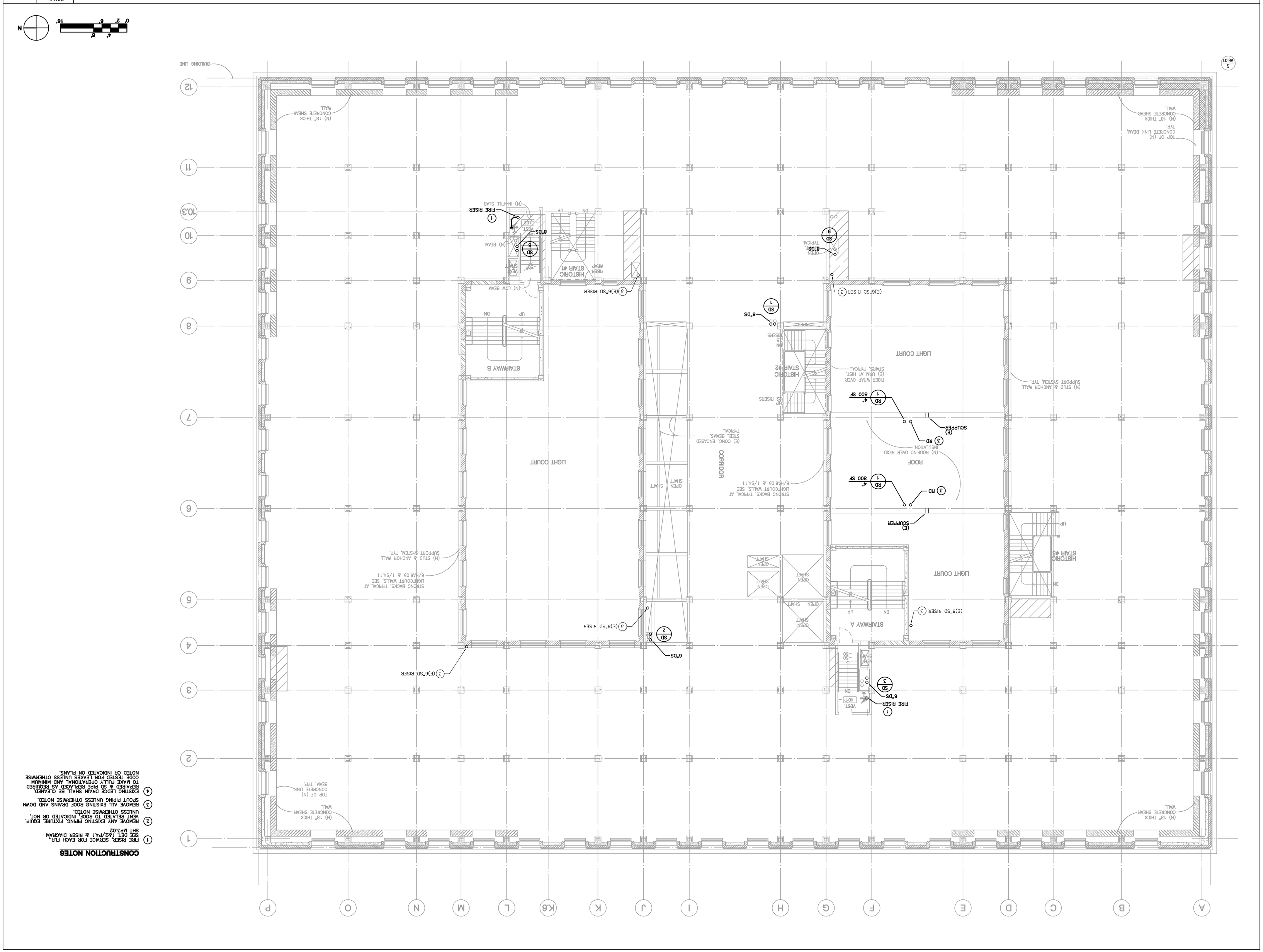

CONSTRUCTION NOTES

1. FIRE RISER, SERVICE FOR EACH FLR., SEE DET. 1&2/P4.1 & RISER DIAGRAM SHT MP3.02
2. REMOVE ANY EXISTING PIPING, FIXTURE, EQUIP. VENT RELATED TO ROOF, INDICATED OR NOT, UNLESS OTHERWISE NOTED.
3. REMOVE ALL EXISTING ROOF DRAINS AND DOWN SPOUT PIPING UNLESS OTHERWISE NOTED.
4. EXISTING LEDGE DRAIN SHALL BE CLEANED, REPAIRED & SD PIPE REPLACED AS REQUIRED TO MAKE FULLY OPERATIONAL AND MINIMUM CODE TESTED FOR LEAKES UNLESS OTHERWISE NOTED OR INDICATED ON PLANS.

NADEL Architects Inc.
1990 So. Bundy Dr.
Fourth Floor
Los Angeles, CA 90025
T. 310.826.2100
F. 310.826.0182
www.nadelarc.com

CONSULTANT

T M A D
TAYLOR & GAINES
STRUCTURAL • MECHANICAL • ELECTRICAL • CIVIL

100 South Anaheim Boulevard, Suite 150
Anaheim, California 92805
Phone: 714.490.5555
Fax: 714.490.5560
Project No. 2306-154-00

REGISTERED PROFESSIONAL ENGINEER
KRAUTOR C. YUSON
No. 22542
Exp. 12/31/12
MECHANICAL
STATE OF CALIFORNIA

REVISIONS

DRAWING TITLE

COUNTY OF LOS ANGELES

THE HALL OF JUSTICE

STRUCTURAL RETROFIT PHASE

SCOPING DOCUMENTS 100% SUBMISSION AUGUST 2010

FOURTH FLOOR PLAN

SCALE : 1/8"=1'-0"
DATE :
JOB NO :2306-154-00
SHEET NO.
MP2.04

ALL DRAWINGS AND WRITTEN MATERIAL APPEARING HEREIN CONSTITUTE THE ORIGINAL AND UNPUBLISHED WORK OF THE ARCHITECT AND THE SAME MAY NOT BE DUPLICATED, USED OR DISCLOSED WITHOUT THE WRITTEN CONSENT OF THE ARCHITECT. COPYRIGHT: NADEL ARCHITECTS INC. ALL RIGHTS RESERVED.

FIFTH FLOOR PLAN | SCALE: 1/8"=1'-0" | 1

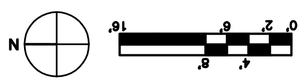

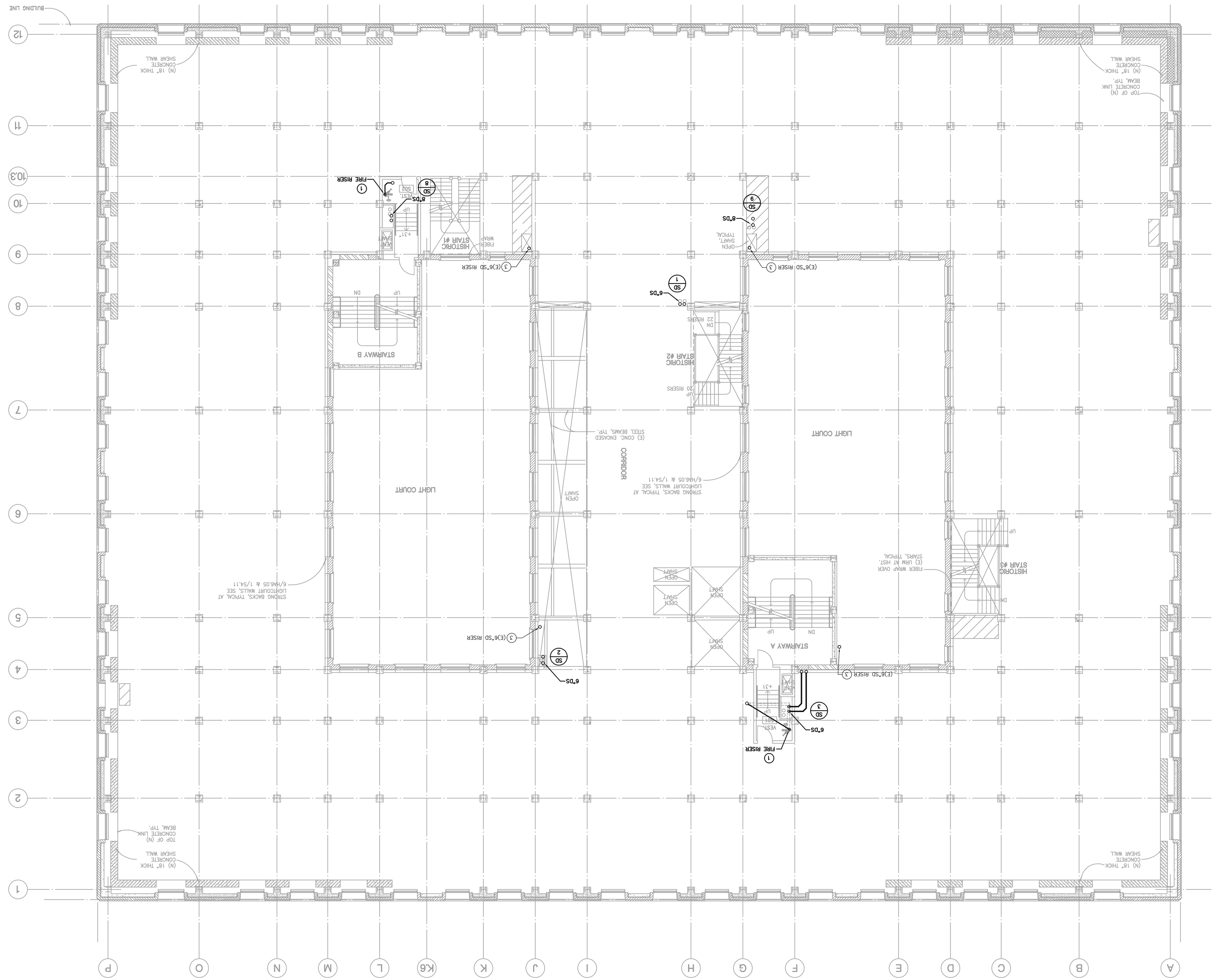

CONSTRUCTION NOTES

1. FIRE RISER, SERVICE FOR EACH FLR., SEE DET. 1&2/P4.1 & RISER DIAGRAM SHT MP3.02
2. REMOVE ANY EXISTING PIPING, FIXTURE, EQUIP. VENT RELATED TO ROOF, INDICATED OR NOT, UNLESS OTHERWISE NOTED.
3. REMOVE ALL EXISTING ROOF DRAINS AND DOWN SPOUT PIPING UNLESS OTHERWISE NOTED.
4. EXISTING LEDGE DRAIN SHALL BE CLEANED, REPAIRED & SD PIPE REPLACED AS REQUIRED TO MAKE FULLY OPERATIONAL AND MINIMUM CODE TESTED FOR LEAKES UNLESS OTHERWISE NOTED OR INDICATED ON PLANS.

NADEL Architects Inc.
1990 So. Bundy Dr.
Fourth Floor
Los Angeles, CA 90025
T. 310.826.2100
F. 310.826.0182
www.nadelarc.com

CONSULTANT
T M A D
TAYLOR & GAINES
STRUCTURAL
MECHANICAL
ELECTRICAL
CIVIL
100 South Anaheim Boulevard, Suite 150
Anaheim, California 92805
Phone: 714.490.5555
Fax: 714.490.5560
Project No. 2306-154-00

REGISTERED PROFESSIONAL ENGINEER
ADAM C. YUSON
No. 22542
Exp. 12/31/12
MECHANICAL
STATE OF CALIFORNIA

COUNTY OF LOS ANGELES
THE HALL OF JUSTICE
STRUCTURAL RETROFIT PHASE

REVISIONS

DRAWING TITLE

FIFTH FLOOR PLAN

SCALE : 1/8"=1'-0"
DATE :
JOB NO :2306-154-00
SHEET NO.
MP2.05

SCOPING DOCUMENTS 100% SUBMISSION AUGUST 2010

ALL DRAWINGS AND WRITTEN MATERIAL APPEARING HEREIN CONSTITUTE THE ORIGINAL AND UNPUBLISHED WORK OF THE ARCHITECT AND THE SAME MAY NOT BE DUPLICATED, USED OR DISCLOSED WITHOUT THE WRITTEN CONSENT OF THE ARCHITECT. COPYRIGHT: NADEL ARCHITECTS INC. ALL RIGHTS RESERVED.

SIXTH FLOOR PLAN | SCALE: 1/8"=1'-0" | 1

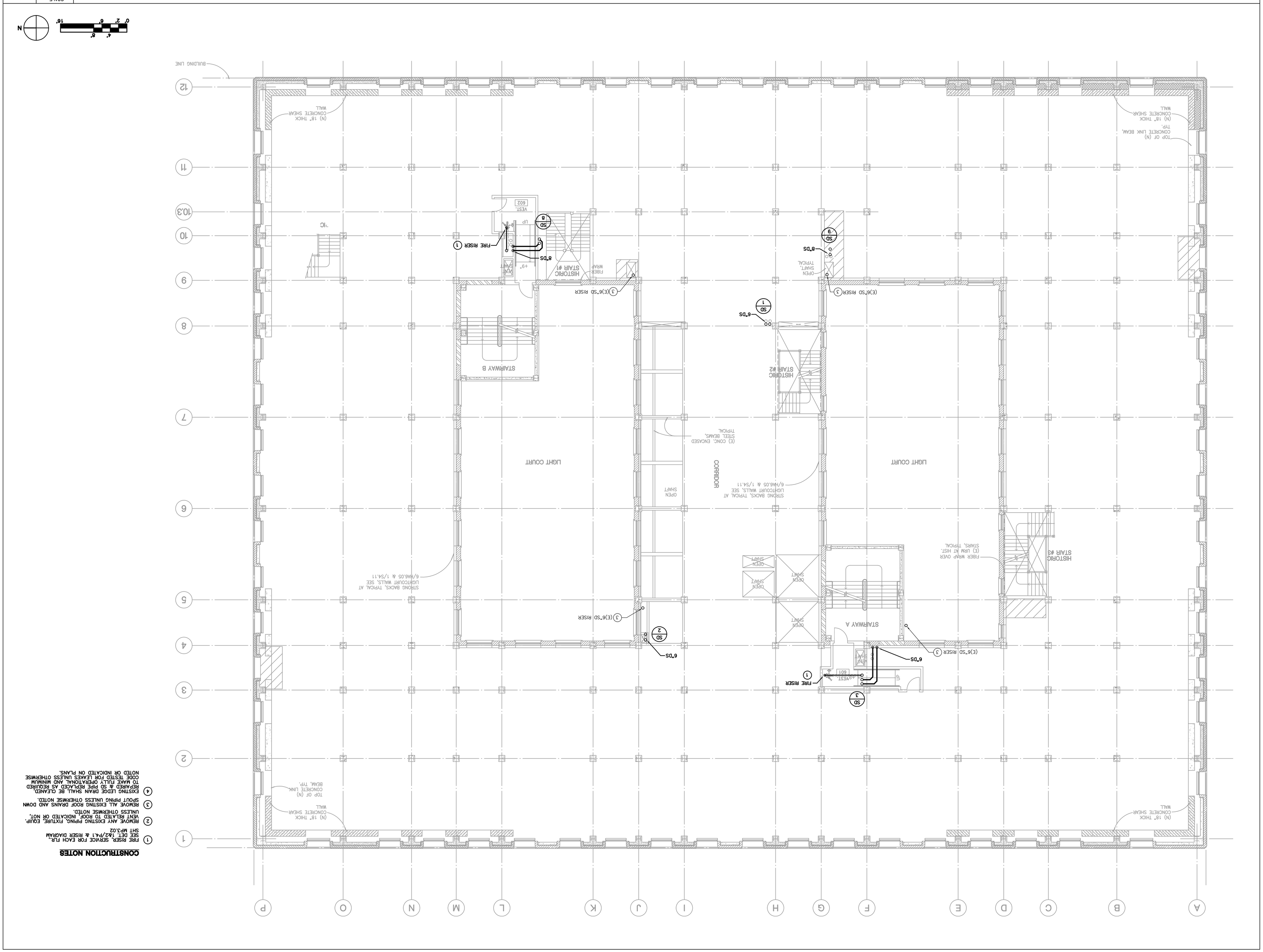

CONSTRUCTION NOTES

1. FIRE RISER, SERVICE FOR EACH FLR., SEE DET. 1&2/P4.1 & RISER DIAGRAM SHT MP3.02
2. REMOVE ANY EXISTING PIPING, FIXTURE, EQUIP. VENT RELATED TO ROOF, INDICATED OR NOT, UNLESS OTHERWISE NOTED.
3. REMOVE ALL EXISTING ROOF DRAINS AND DOWN SPOUT PIPING UNLESS OTHERWISE NOTED.
4. EXISTING LEDGE DRAIN SHALL BE CLEANED, REPAIRED & SD PIPE REPLACED AS REQUIRED TO MAKE FULLY OPERATIONAL AND MINIMUM CODE TESTED FOR LEAKES UNLESS OTHERWISE NOTED OR INDICATED ON PLANS.

NADEL Architects Inc.
1990 So. Bundy Dr.
Fourth Floor
Los Angeles, CA 90025
T. 310.826.2100
F. 310.826.0182
www.nadelarc.com

CONSULTANT

TAYLOR & GAINES
100 South Anaheim Boulevard, Suite 150
Anaheim, California 92805
Phone: 714.490.5555
Fax: 714.490.5560
Project No. 2306-154-00

REGISTERED PROFESSIONAL ENGINEER
ADDITOR C. YUSON
No. 22542
Exp. 12/31/12
STATE OF CALIFORNIA

REVISIONS

DRAWING TITLE

COUNTY OF LOS ANGELES

THE HALL OF JUSTICE

STRUCTURAL RETROFIT PHASE

SCOPING DOCUMENTS 100% SUBMISSION AUGUST 2010

SIXTH FLOOR PLAN

SCALE : 1/8"=1'-0"
DATE :
JOB NO :2306-154-00
SHEET NO.

MP2.06

ALL DRAWINGS AND WRITTEN MATERIAL APPEARING HEREIN CONSTITUTE THE ORIGINAL AND UNPUBLISHED WORK OF THE ARCHITECT AND THE SAME MAY NOT BE DUPLICATED, USED OR DISCLOSED WITHOUT THE WRITTEN CONSENT OF THE ARCHITECT. COPYRIGHT: NADEL ARCHITECTS INC. ALL RIGHTS RESERVED.

SEVENTH FLOOR PLAN

SCALE: 1/8"=1'-0"

1

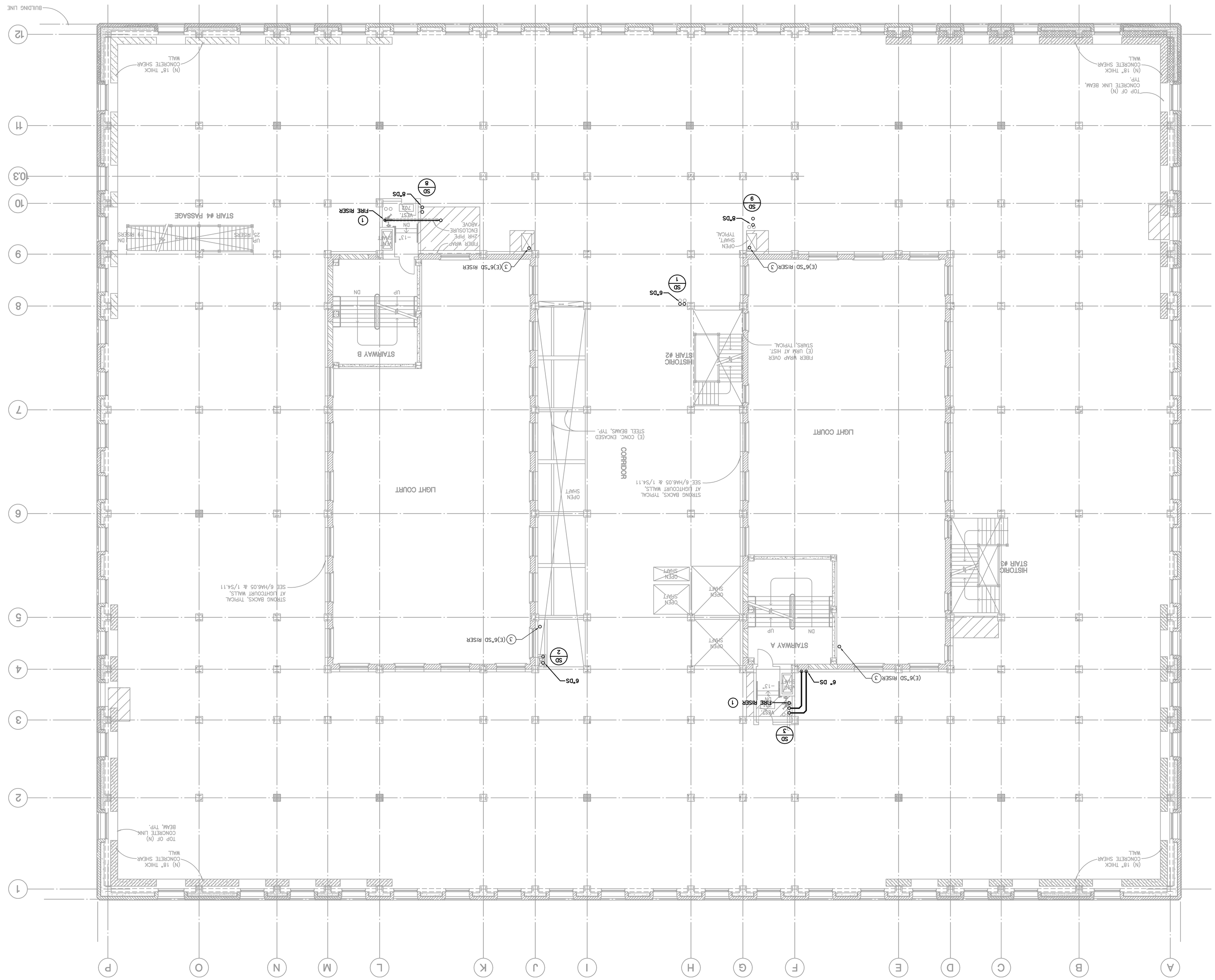

CONSTRUCTION NOTES

1. FIRE RISER, SERVICE FOR EACH FLR., SEE DET. 1&2/P4.1 & RISER DIAGRAM SHT MP3.02
2. REMOVE ANY EXISTING PIPING, FIXTURE, EQUIP. VENT RELATED TO ROOF, INDICATED OR NOT, UNLESS OTHERWISE NOTED.
3. REMOVE ALL EXISTING ROOF DRAINS AND DOWN SPOUT PIPING UNLESS OTHERWISE NOTED.
4. EXISTING LEDGE DRAIN SHALL BE CLEANED, REPAIRED & SD PIPE REPLACED AS REQUIRED TO MAKE FULLY OPERATIONAL AND MINIMUM CODE TESTED FOR LEAKES UNLESS OTHERWISE NOTED OR INDICATED ON PLANS.

NADEL Architects Inc.
1990 So. Bundy Dr.
Fourth Floor
Los Angeles, CA 90025
T. 310.826.2100
F. 310.826.0182
www.nadelarc.com

CONSULTANT

T M A D
TAYLOR & GAINES
STRUCTURAL
MECHANICAL
ELECTRICAL
CIVIL

100 South Anaheim Boulevard, Suite 150
Anaheim, California 92805
Phone: 714.490.5555
Fax: 714.490.5560
Project No. 2306-154-00

REGISTERED PROFESSIONAL ENGINEER
ROBERT C. YUSON
No. 22542
Exp. 12/31/12
MECHANICAL
STATE OF CALIFORNIA

REVISIONS

DRAWING TITLE

SEVENTH FLOOR PLAN

SCALE : 1/8"=1'-0"
DATE :
JOB NO : 2306-154-00
SHEET NO.

MP2.07

SCOPING DOCUMENTS 100% SUBMISSION AUGUST 2010

COUNTY OF LOS ANGELES

THE HALL OF JUSTICE

STRUCTURAL RETROFIT PHASE

ALL DRAWINGS AND WRITTEN MATERIAL APPEARING HEREIN CONSTITUTE THE ORIGINAL AND UNPUBLISHED WORK OF THE ARCHITECT AND THE SAME MAY NOT BE DUPLICATED, USED OR DISCLOSED WITHOUT THE WRITTEN CONSENT OF THE ARCHITECT. COPYRIGHT: NADEL ARCHITECTS INC. ALL RIGHTS RESERVED.

EIGHTH FLOOR PLAN

SCALE: 1/8"=1'-0" | 1

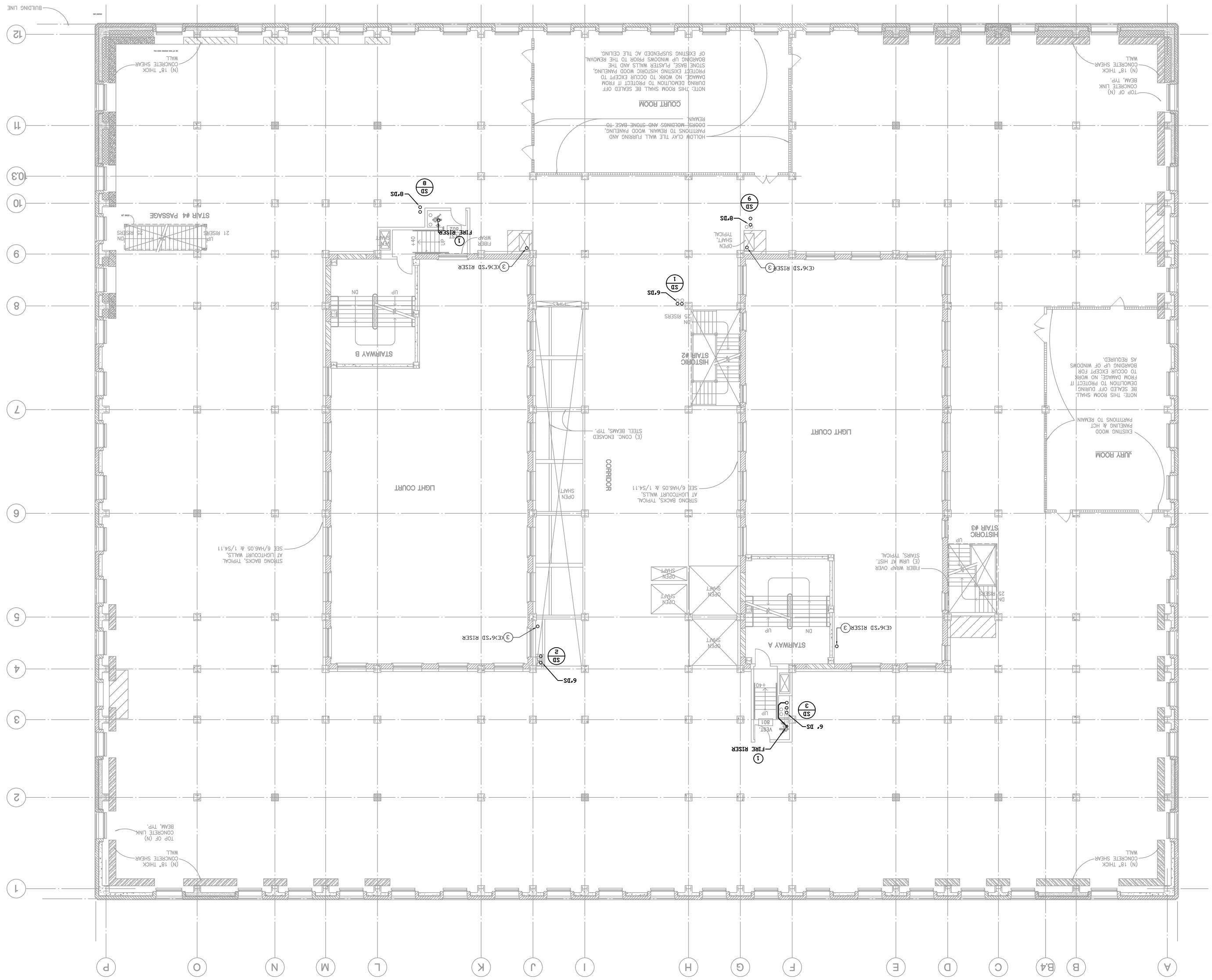
BUILDING LINE
(N) 18" THICK CONCRETE SHEAR WALL
TOP OF (N) CONCRETE LINK BEAM, TYP.
COURT ROOM
NOTE: THIS ROOM SHALL BE SEALED OFF DURING DEMOLITION TO PROTECT IT FROM DAMAGE. NO WORK TO OCCUR EXCEPT TO REMOVE EXISTING HISTORIC WOOD PANELING, PROTECT EXISTING PLASTER WALLS AND THE STONE BASE. PLASTER WALLS AND THE BOARDING UP WINDOWS PRIOR TO THE REMOVAL OF EXISTING SUSPENDED AC TILE CEILING.
HOLLOW CLAY TILE WALL FURRING AND PARTITIONS TO REMAIN. WOOD PANELING, DOORS, MOLDINGS AND STONE BASE TO REMAIN.
JURY ROOM
EXISTING WOOD PANELING & HCT PARTITIONS TO REMAIN
NOTE: THIS ROOM SHALL BE SEALED OFF DURING DEMOLITION TO PROTECT IT FROM DAMAGE. NO WORK TO OCCUR EXCEPT FOR BOARDING UP OF WINDOWS AS REQUIRED.
LIGHT COURT
CORRIDOR
STAIRWAY B
UP
DN
21 RISERS
STAIR #4 PASSAGE
HISTORIC STAIR #2
12 RISERS
HISTORIC STAIR #3
25 RISERS
STAIRWAY A
OPEN SHAFT
OPEN SHAFT
OPEN SHAFT

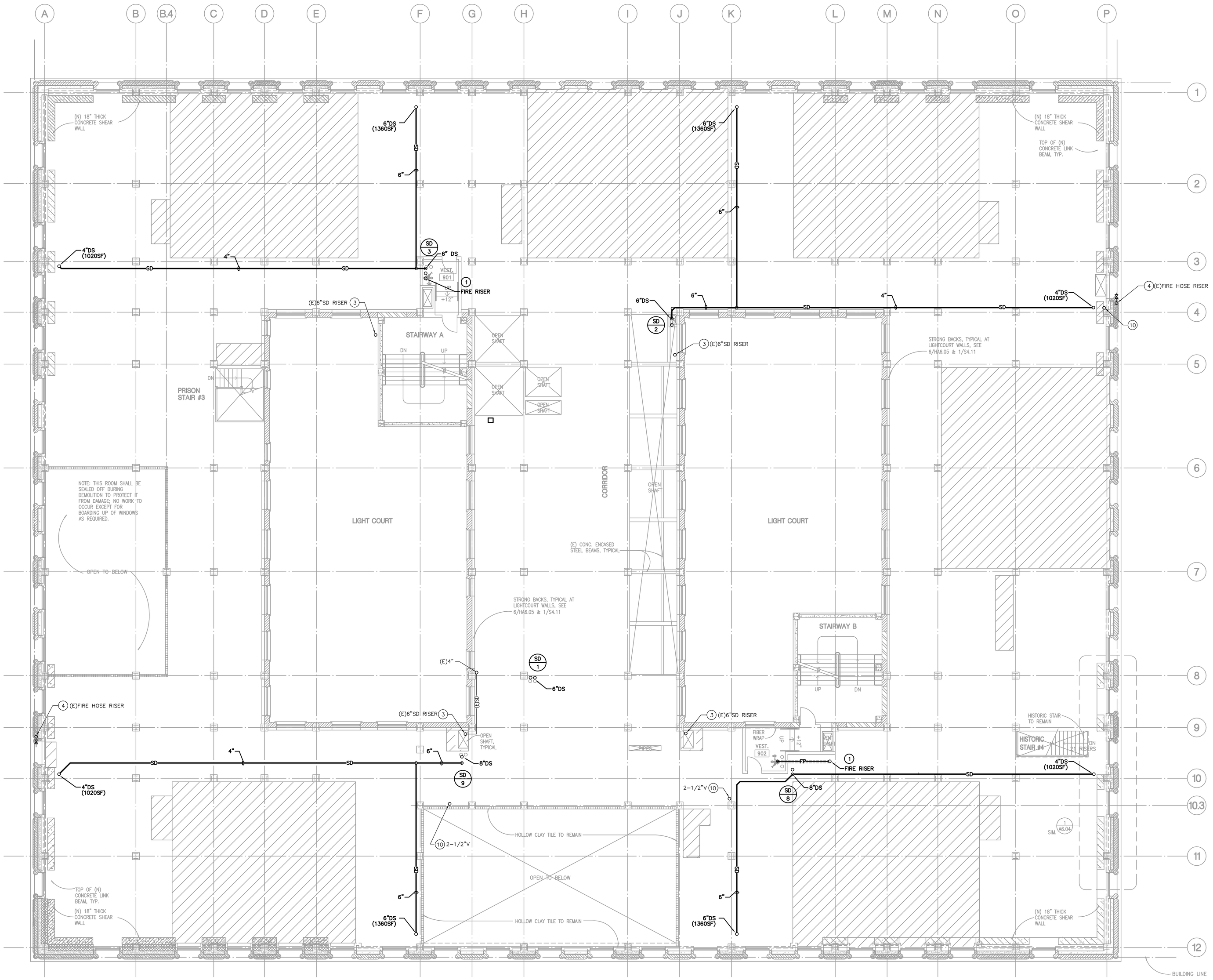

CONSTRUCTION NOTES

1. FIRE RISER, SERVICE FOR EACH FLR., SEE DET. 1&2/P4.1 & RISER DIAGRAM SHT MP3.02
2. REMOVE ANY EXISTING PIPING, FIXTURE, EQUIP. VENT RELATED TO ROOF, INDICATED OR NOT, UNLESS OTHERWISE NOTED.
3. REMOVE ALL EXISTING ROOF DRAINS AND DOWN SPOUT PIPING UNLESS OTHERWISE NOTED.
4. EXISTING LEDGE DRAIN SHALL BE CLEANED, REPAIRED & SD PIPE REPLACED AS REQUIRED TO MAKE FULLY OPERATIONAL AND MINIMUM CODE TESTED FOR LEAKES UNLESS OTHERWISE NOTED OR INDICATED ON PLANS.

0' 2' 4' 8' 16'

N

NINTH FLOOR PLAN | SCALE: 1/8"=1'-0" | 1

NADEL Architects Inc.

1990 So. Bundy Dr.
Fourth Floor
Los Angeles, CA 90025

T. 310.826.2100
F. 310.826.0182

www.nadelarc.com

CONSULTANT

TMAD TAYLOR & GAINES
• STRUCTURAL
• MECHANICAL
• ELECTRICAL
• CIVIL

100 South Anaheim Boulevard, Suite 150
Anaheim, California 92805
Phone: 714.490.5555
Fax: 714.490.5560
Project No. 2306-154-00

REGISTERED PROFESSIONAL ENGINEER
ALEXTOR C. YU SON
No.22542
Exp. 12/31/01
MECHANICAL
STATE OF CALIFORNIA

COUNTY OF LOS ANGELES

THE HALL OF JUSTICE

STRUCTURAL RETROFIT PHASE

REVISIONS

△	
△	
△	
△	
△	
△	

DRAWING TITLE

NINTH FLOOR PLAN

SCOPING DOCUMENTS 100% SUBMISSION AUGUST 2010

SCALE : 1/8"=1'-0"
DATE :
JOB NO :2306-154-00
SHEET NO.

MP2.09

ALL DRAWINGS AND WRITTEN MATERIAL APPEARING HEREIN CONSTITUTE THE ORIGINAL AND UNPUBLISHED WORK OF THE ARCHITECT AND THE SAME MAY NOT BE DUPLICATED, USED OR DISCLOSED WITHOUT THE WRITTEN CONSENT OF THE ARCHITECT. COPYRIGHT: NADEL ARCHITECTS INC. ALL RIGHTS RESERVED.

ALL DRAWINGS AND WRITTEN MATERIAL APPEARING HEREIN CONSTITUTE THE ORIGINAL AND UNPUBLISHED WORK OF THE ARCHITECT AND THE SAME MAY NOT BE DUPLICATED, USED OR DISCLOSED WITHOUT THE WRITTEN CONSENT OF THE ARCHITECT. COPYRIGHT: NADEL ARCHITECTS INC. ALL RIGHTS RESERVED.

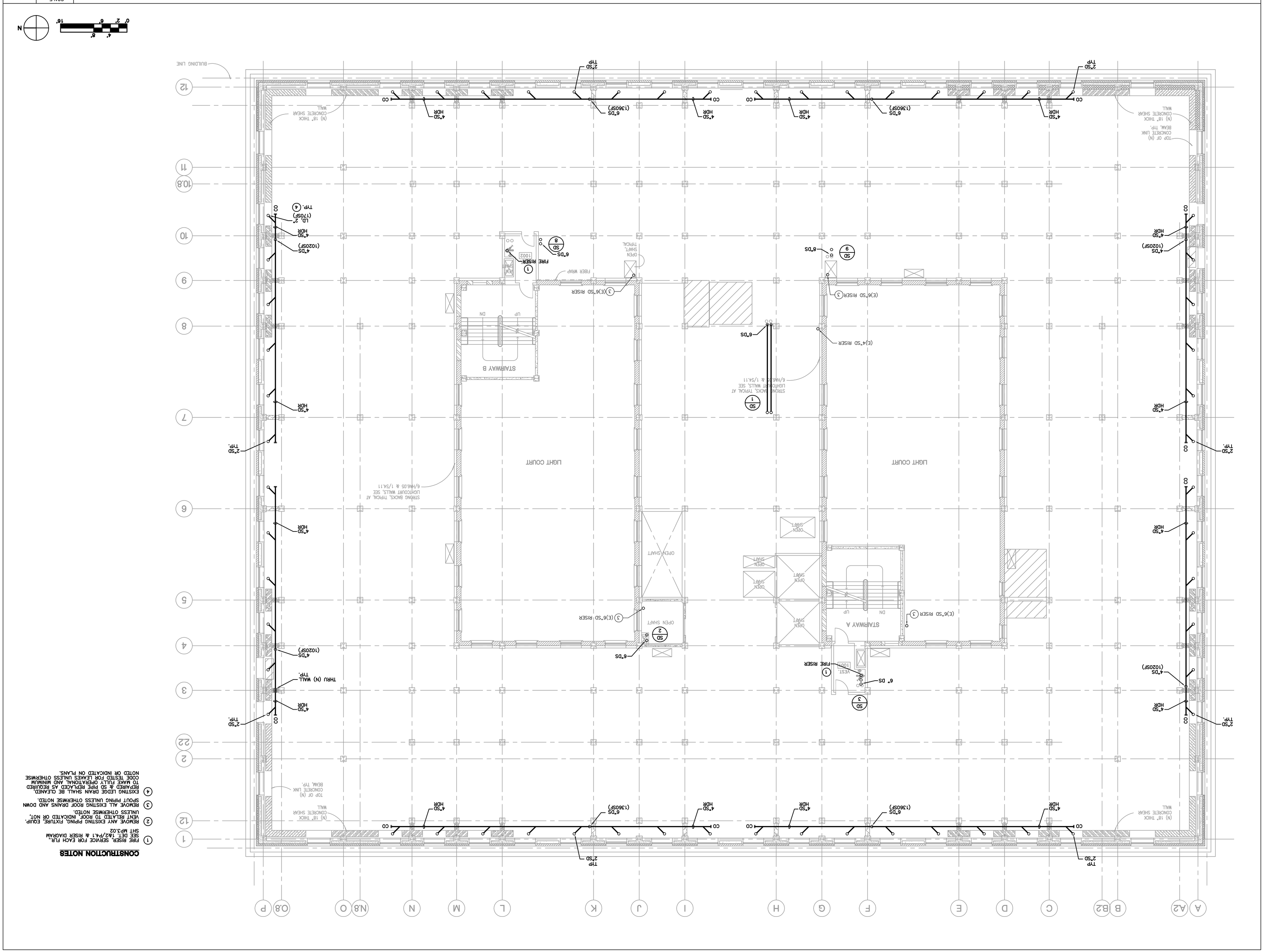

CONSTRUCTION NOTES

1. FIRE RISER, SERVICE FOR EACH FLR., SEE DET. 1&2/P4.1 & RISER DIAGRAM SHT MP3.02
2. REMOVE ANY EXISTING PIPING, FIXTURE, EQUIP. VENT RELATED TO ROOF, INDICATED OR NOT, UNLESS OTHERWISE NOTED.
3. REMOVE ALL EXISTING ROOF DRAINS AND DOWN SPOUT PIPING UNLESS OTHERWISE NOTED.
4. EXISTING LEDGE DRAIN SHALL BE CLEANED, REPAIRED & SD PIPE REPLACED AS REQUIRED TO MAKE FULLY OPERATIONAL AND MINIMUM CODE TESTED FOR LEAKES UNLESS OTHERWISE NOTED OR INDICATED ON PLANS.

NADEL
Architects Inc.
1990 So. Bundy Dr.
Fourth Floor
Los Angeles, CA 90025
T. 310.826.2100
F. 310.826.0182
www.nadelarc.com

CONSULTANT

T M A D
TAYLOR & GAINES
• STRUCTURAL • MECHANICAL • ELECTRICAL • CIVIL

100 South Anaheim Boulevard, Suite 150
Anaheim, California 92805
Phone: 714.490.5555
Fax: 714.490.5560
Project No. 2306-154-00

REGISTERED PROFESSIONAL ENGINEER
ADAM C. YUSON
No. 22542
Exp. 12/31/12
MECHANICAL
STATE OF CALIFORNIA

REVISIONS

DRAWING TITLE

TENTH FLOOR PLAN

SCALE : 1/8"=1'-0"
DATE :
JOB NO : 2306-154-00
SHEET NO.
MP2.10

SCOPING DOCUMENTS 100% SUBMISSION AUGUST 2010

COUNTY OF LOS ANGELES
THE HALL OF JUSTICE
STRUCTURAL RETROFIT PHASE

ALL DRAWINGS AND WRITTEN MATERIAL APPEARING HEREIN CONSTITUTE THE ORIGINAL AND UNPUBLISHED WORK OF THE ARCHITECT AND THE SAME MAY NOT BE DUPLICATED, USED OR DISCLOSED WITHOUT THE WRITTEN CONSENT OF THE ARCHITECT. COPYRIGHT: NADEL ARCHITECTS INC. ALL RIGHTS RESERVED.

TWELFTH FLOOR PLAN

SCALE: 1/8"=1'-0"

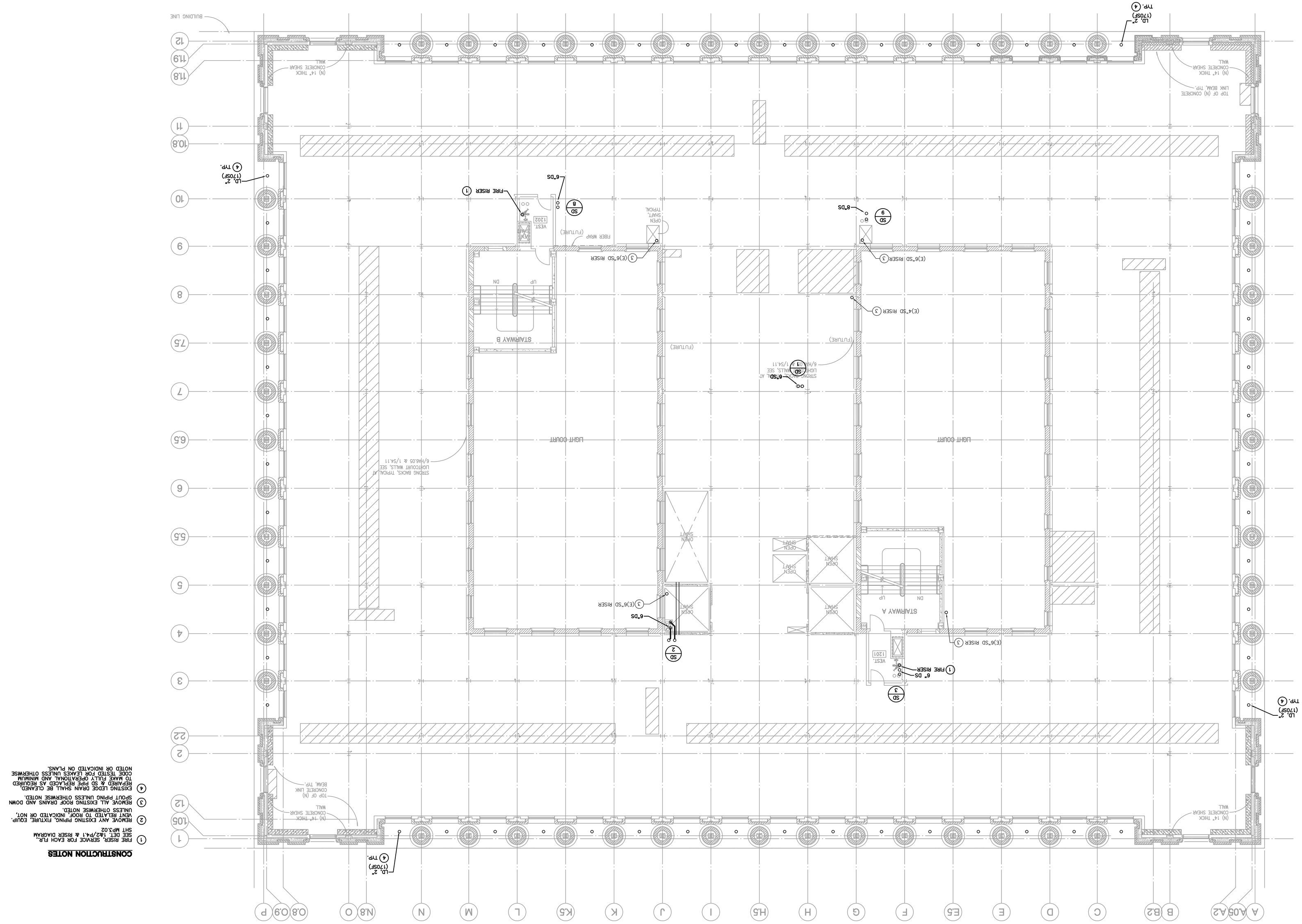

CONSTRUCTION NOTES

1. FIRE RISER, SERVICE FOR EACH FLR., SEE DET. 1&2/P4.1 & RISER DIAGRAM SHT MP3.02
2. REMOVE ANY EXISTING PIPING, FIXTURE, EQUIP. VENT RELATED TO ROOF, INDICATED OR NOT, UNLESS OTHERWISE NOTED.
3. REMOVE ALL EXISTING ROOF DRAINS AND DOWN SPOUT PIPING UNLESS OTHERWISE NOTED.
4. EXISTING LEDGE DRAIN SHALL BE CLEANED, REPAIRED & SD PIPE REPLACED AS REQUIRED TO MAKE FULLY OPERATIONAL AND MINIMUM CODE TESTED FOR LEAKES UNLESS OTHERWISE NOTED OR INDICATED ON PLANS.

NADEL Architects Inc.
1990 So. Bundy Dr.
Fourth Floor
Los Angeles, CA 90025
T. 310.826.2100
F. 310.826.0182
www.nadelarc.com

CONSULTANT

T M A D
TAYLOR & GAINES
100 South Anaheim Boulevard, Suite 150
Anaheim, California 92805
Phone: 714.490.5555
Fax: 714.490.5560
Project No. 2306-154-00

REGISTERED PROFESSIONAL ENGINEER
ADAMTOR C. YUSON
No. 22542
Exp. 12/31/02
MECHANICAL
STATE OF CALIFORNIA

REVISIONS

DRAWING TITLE

COUNTY OF LOS ANGELES

THE HALL OF JUSTICE

STRUCTURAL RETROFIT PHASE

SCOPING DOCUMENTS 100% SUBMISSION AUGUST 2010

SCALE : 1/8"=1'-0"
DATE :
JOB NO :2306-154-00
SHEET NO.
MP2.12

ALL DRAWINGS AND WRITTEN MATERIAL APPEARING HEREIN CONSTITUTE THE ORIGINAL AND UNPUBLISHED WORK OF THE ARCHITECT AND THE SAME MAY NOT BE DUPLICATED, USED OR DISCLOSED WITHOUT THE WRITTEN CONSENT OF THE ARCHITECT. COPYRIGHT: NADEL ARCHITECTS INC. ALL RIGHTS RESERVED.

FOURTEENTH FLOOR PLAN

SCALE: 1/8"=1'-0"

1

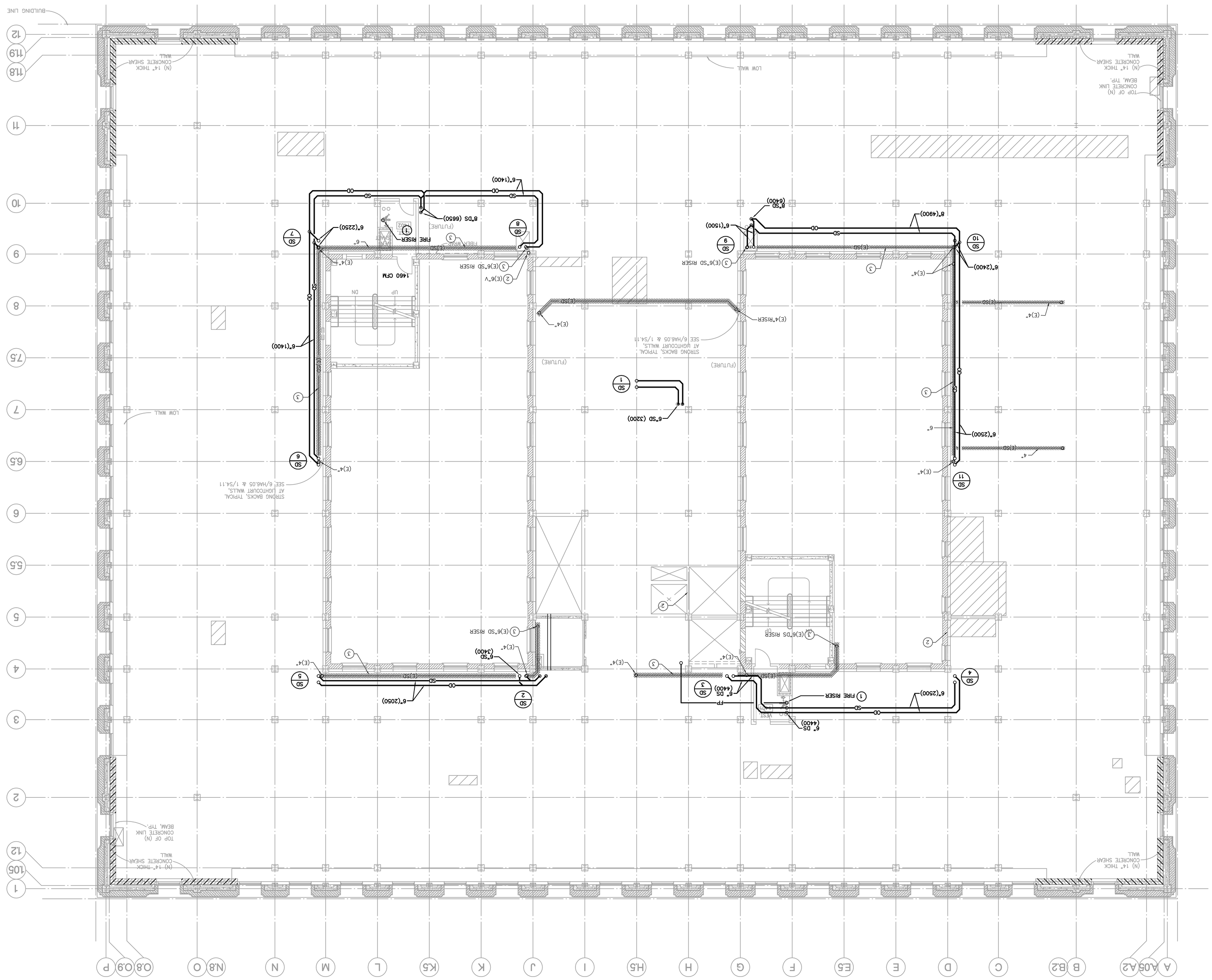

CONSTRUCTION NOTES

1. FIRE RISER, SERVICE FOR EACH FLR., SEE DET. 1&2/P4.1 & RISER DIAGRAM SHT MP3.02
2. REMOVE ANY EXISTING PIPING, FIXTURE, EQUIP. VENT RELATED TO ROOF, INDICATED OR NOT, UNLESS OTHERWISE NOTED.
3. REMOVE ALL EXISTING ROOF DRAINS AND DOWN SPOUT PIPING UNLESS OTHERWISE NOTED.
4. EXISTING LEDGE DRAIN SHALL BE CLEANED, REPAIRED & SD PIPE REPLACED AS REQUIRED TO MAKE FULLY OPERATIONAL AND MINIMUM CODE TESTED FOR LEAKES UNLESS OTHERWISE NOTED OR INDICATED ON PLANS.

NADEL Architects Inc.

1990 So. Bundy Dr.
Fourth Floor
Los Angeles, CA 90025
T. 310.826.2100
F. 310.826.0182
www.nadelarc.com

CONSULTANT

- STRUCTURAL
- MECHANICAL
- ELECTRICAL
- CIVIL

T M A D
TAYLOR & GAINES
100 South Anaheim Boulevard, Suite 150
Anaheim, California 92805
Phone: 714.490.5555
Fax: 714.490.5560
Project No. 2306-154-00

REGISTERED PROFESSIONAL ENGINEER
ADAM C. YUSON
No. 22542
Exp. 12/31/12
MECHANICAL
STATE OF CALIFORNIA

DRAWING TITLE

REVISIONS

COUNTY OF LOS ANGELES

THE HALL OF JUSTICE

STRUCTURAL RETROFIT PHASE

SCOPING DOCUMENTS 100% SUBMISSION AUGUST 2010

FOURTEENTH FLOOR PLAN

SCALE : 1/8"=1'-0"
DATE :
JOB NO : 2306-154-00
SHEET NO.

MP2.14

ALL DRAWINGS AND WRITTEN MATERIAL APPEARING HEREIN CONSTITUTE THE ORIGINAL AND UNPUBLISHED WORK OF THE ARCHITECT AND THE SAME MAY NOT BE DUPLICATED, USED OR DISCLOSED WITHOUT THE WRITTEN CONSENT OF THE ARCHITECT. COPYRIGHT. NADEL ARCHITECTS INC. ALL RIGHTS RESERVED.

PENTHOUSE FLOOR PLAN

SCALE: 1/8"=1'-0"

1

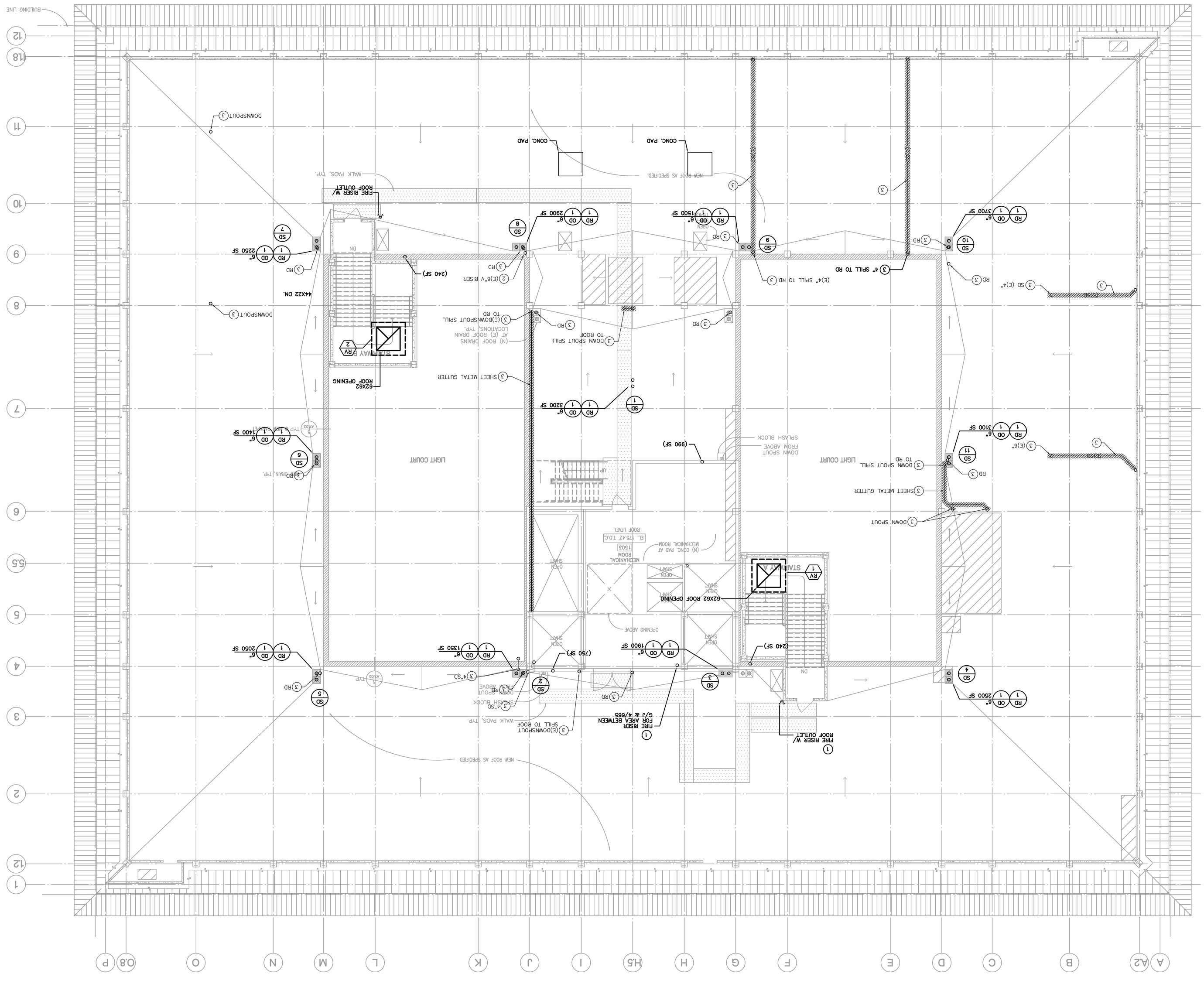

CONSTRUCTION NOTES

1. FIRE RISER. SERVICE FOR EACH FLR. SEE DET. 1/A2.7/P4.1 & RISER DIAGRAM SHT MP2.02
2. REMOVE ANY EXISTING PIPING, FIXTURE, EQUIP. VENT RELATED TO ROOF, INDICATED OR NOT, UNLESS OTHERWISE NOTED.
3. REMOVE ALL EXISTING ROOF DRAINS AND DOWN SPOUT PIPING UNLESS OTHERWISE NOTED.
4. EXISTING LEDGE DRAIN SHALL BE CLEANED, REPAIRED & SD PIPE REPLACED AS REQUIRED TO MAKE FULLY OPERATIONAL AND MINIMUM CODE TESTED FOR LEAKES UNLESS OTHERWISE NOTED OR INDICATED ON PLANS.

NADEL
Architects Inc.
1990 So. Bundy Dr.
Fourth Floor
Los Angeles, CA 90025
T. 310.826.2100
F. 310.826.0182
www.nadelarc.com

CONSULTANT

T A R G E T S
E A I N E S

STRUCTURAL
MECHANICAL
ELECTRICAL
CIVIL

100 South Anaheim Boulevard, Suite 150
Anaheim, California 92805
Phone: 714.490.5555
Fax: 714.490.5560
Project No. 2306-154-00

REGISTERED PROFESSIONAL ENGINEER
RAZMJOU
No. 22542
STATE OF CALIFORNIA
EXP. 12/31/12

REVISIONS

DRAWING TITLE

PENTHOUSE FLOOR PLAN

SCOPING DOCUMENTS 100% SUBMISSION AUGUST 2010

SCALE : 1/8"=1'-0"
DATE :
JOB NO 2306-154-00
SHEET NO.

MP2.15

COUNTY OF LOS ANGELES

THE HALL OF JUSTICE

STRUCTURAL RETROFIT PHASE

ALL DRAWINGS AND WRITTEN MATERIAL APPEARING HEREIN CONSTITUTE THE ORIGINAL AND UNPUBLISHED WORK OF THE ARCHITECT AND THE SAME MAY NOT BE DUPLICATED, USED OR DISCLOSED WITHOUT THE WRITTEN CONSENT OF THE ARCHITECT. COPYRIGHT: NADEL ARCHITECTS INC. ALL RIGHTS RESERVED.

ELEV. MACHINE ROOM PLAN

SCALE: 1/8"=1'-0"

1

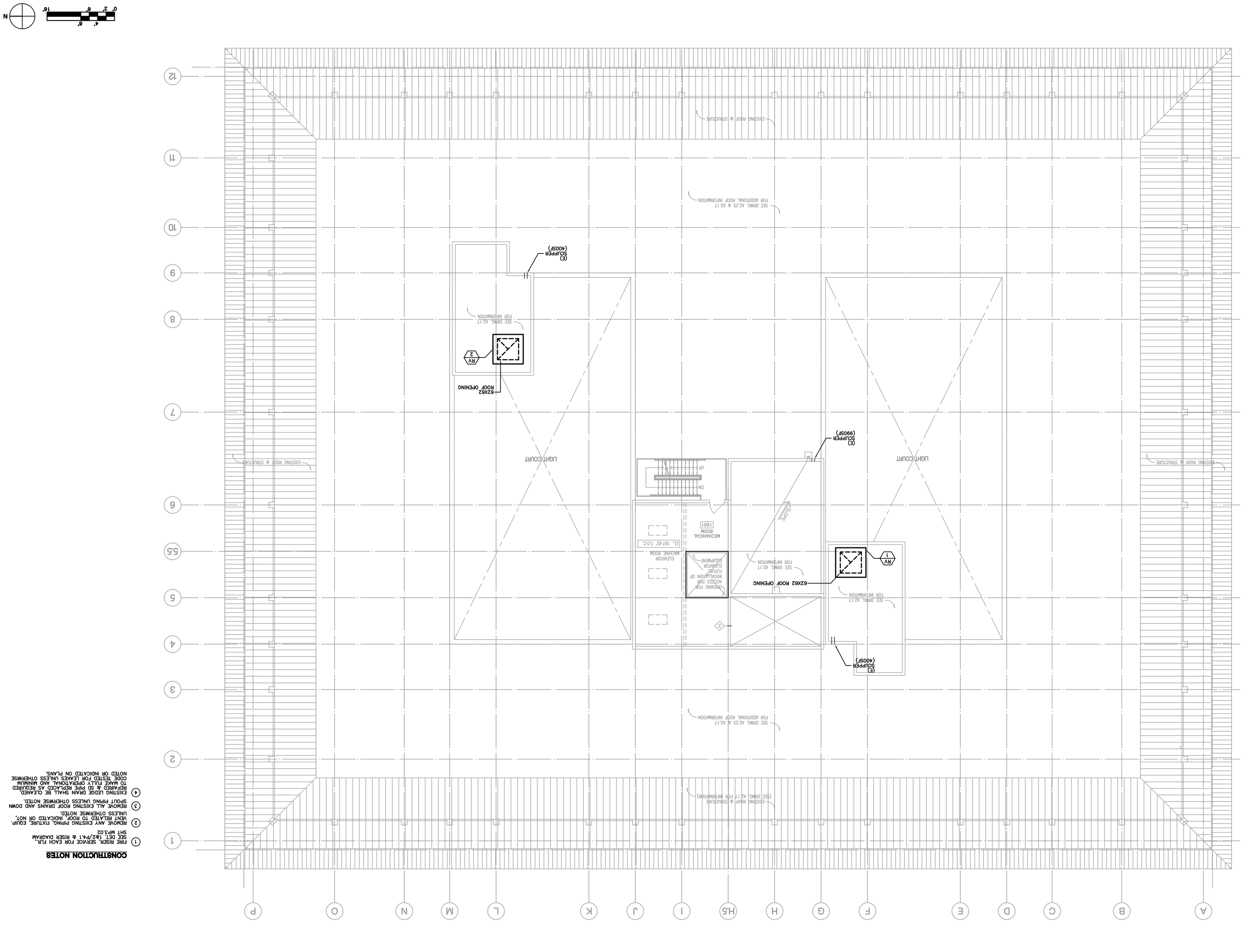

N

0' 2' 8' 16'

4' 8'

CONSTRUCTION NOTES

1. FIRE RISER. SERVICE FOR EACH FLR. SEE DET. 1&2/PA-1 & RISER DIAGRAM SHT MP3.02
2. REMOVE ANY EXISTING PIPING, FIXTURE, EQUIP. VENT RELATED TO ROOF. INDICATED OR NOT, UNLESS OTHERWISE NOTED.
3. REMOVE ALL EXISTING ROOF DRAINS AND DOWN SPOUT PIPING UNLESS OTHERWISE NOTED.
4. EXISTING LEDGE DRAIN SHALL BE CLEANED. REPAIRED & SD PIPE REPLACED AS REQUIRED TO MAKE FULLY OPERATIONAL AND MINIMUM CODE TESTED FOR LEAKES UNLESS OTHERWISE NOTED OR INDICATED ON PLANS.

NADEL Architects Inc.
1990 So. Bundy Dr.
Fourth Floor
Los Angeles, CA 90025
T. 310.826.2100
F. 310.826.0162
www.nadelarc.com

CONSULTANT

T M A D	STRUCTURAL
TAYLOR	MECHANICAL
&GAINES	ELECTRICAL
	CIVIL

100 South Anaheim Boulevard, Suite 150
Anaheim, California 92805
Phone: 714.490.5555
Fax: 714.490.5560

Project No. 2306-154-00

REVISIONS

1	
2	
3	
4	
5	
6	
7	

DRAWING TITLE

ELEV. MACHINE ROOM PLAN

SCALE : 1/8"=1'-0"

DATE :

JOB NO :2306-154-00

SHEET NO.

MP2.16

COUNTY OF LOS ANGELES

THE HALL OF JUSTICE

STRUCTURAL RETROFIT PHASE

SCOPING DOCUMENTS 100% SUBMISSION AUGUST 2010

ALL DRAWINGS AND WRITTEN MATERIAL APPEARING HEREIN CONSTITUTE THE ORIGINAL AND UNPUBLISHED WORK OF THE ARCHITECT AND THE SAME MAY NOT BE DUPLICATED, USED OR DISCLOSED WITHOUT THE WRITTEN CONSENT OF THE ARCHITECT. COPYRIGHT: NADEL ARCHITECTS INC. ALL RIGHTS RESERVED.

ELEV. MACHINE ROOM ROOF PLAN

SCALE: 1/8"=1'-0"

1

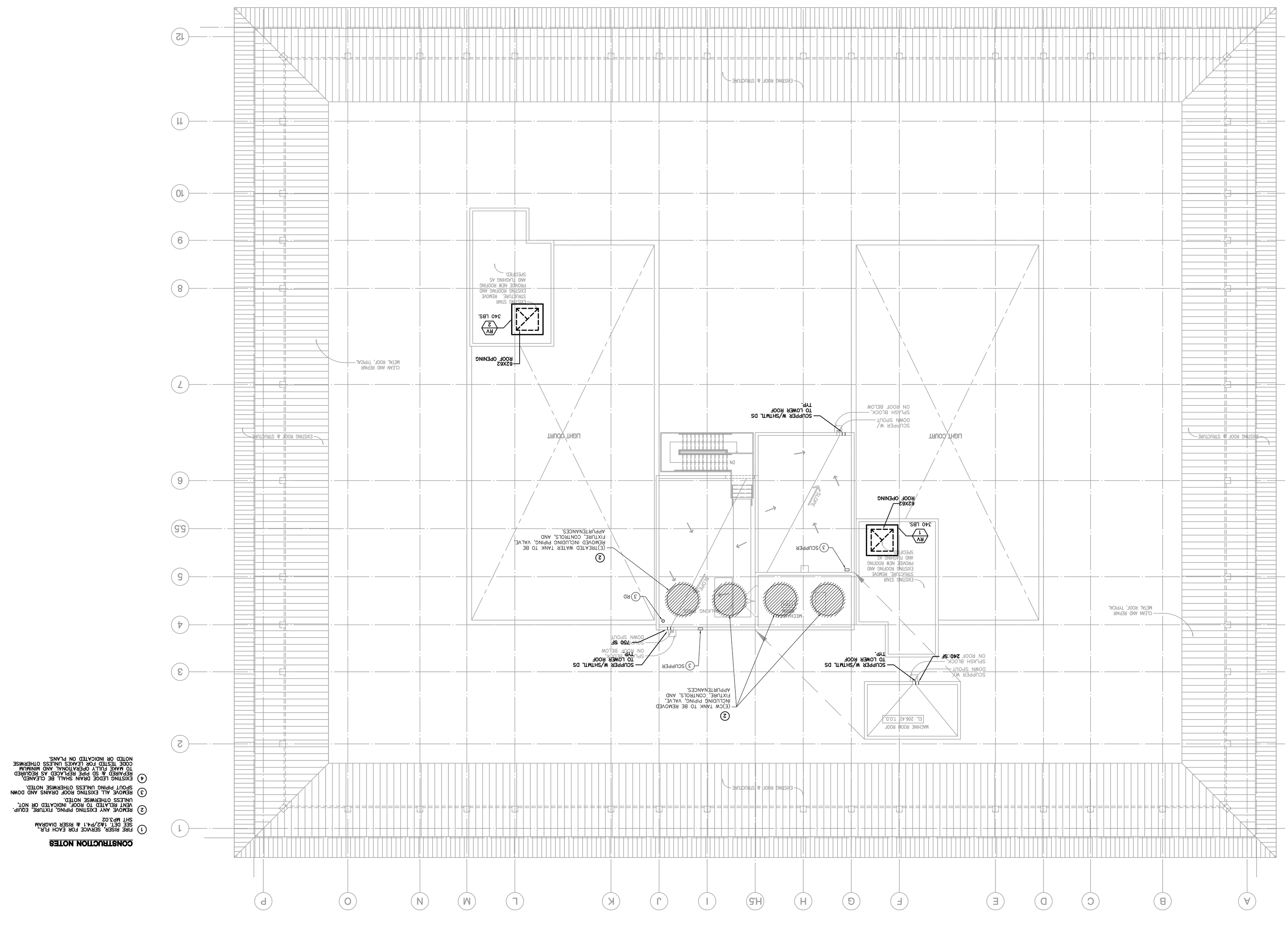

CONSTRUCTION NOTES

1. FIRE RISER. SERVICE FOR EACH FLR., SEE DET. 1&2/P4.1 & RISER DIAGRAM SHT MP3.02
2. REMOVE ANY EXISTING PIPING, FIXTURE, EQUIP. VENT RELATED TO ROOF, INDICATED OR NOT, UNLESS OTHERWISE NOTED.
3. REMOVE ALL EXISTING ROOF DRAINS AND DOWN SPOUT PIPING UNLESS OTHERWISE NOTED.
4. EXISTING LEDGE DRAIN SHALL BE CLEANED, REPAIRED & SD PIPE REPLACED AS REQUIRED TO MAKE FULLY OPERATIONAL AND MINIMUM CODE TESTED FOR LEAKES UNLESS OTHERWISE NOTED OR INDICATED ON PLANS.

NADEL Architects Inc.
1990 So. Bundy Dr.
Fourth Floor
Los Angeles, CA 90025
T. 310.826.2100
F. 310.826.0182
www.nadelarc.com

CONSULTANT

T M A D
STRUCTURAL
MECHANICAL
ELECTRICAL
PLUMBING
& GAS
CIVIL

100 South Anaheim Boulevard, Suite 150
Anaheim, California 92805
Phone: 714.490.5555
Fax: 714.490.5560
Project No. 2306-154-00

REGISTERED PROFESSIONAL ENGINEER
MEHRDAD MOKHTARI
No. 25542
Exp. 12/31/10
STATE OF CALIFORNIA

REVISIONS

1	
2	
3	
4	
5	
6	
7	

DRAWING TITLE

ELEV. MACHINE ROOM ROOF PLAN

SCALE : 1/8"=1'-0"
DATE :
JOB NO : 2306-154-00
SHEET NO.

MP2.17

SCOPING DOCUMENTS 100% SUBMISSION AUGUST 2010

COUNTY OF LOS ANGELES

THE HALL OF JUSTICE

STRUCTURAL RETROFIT PHASE

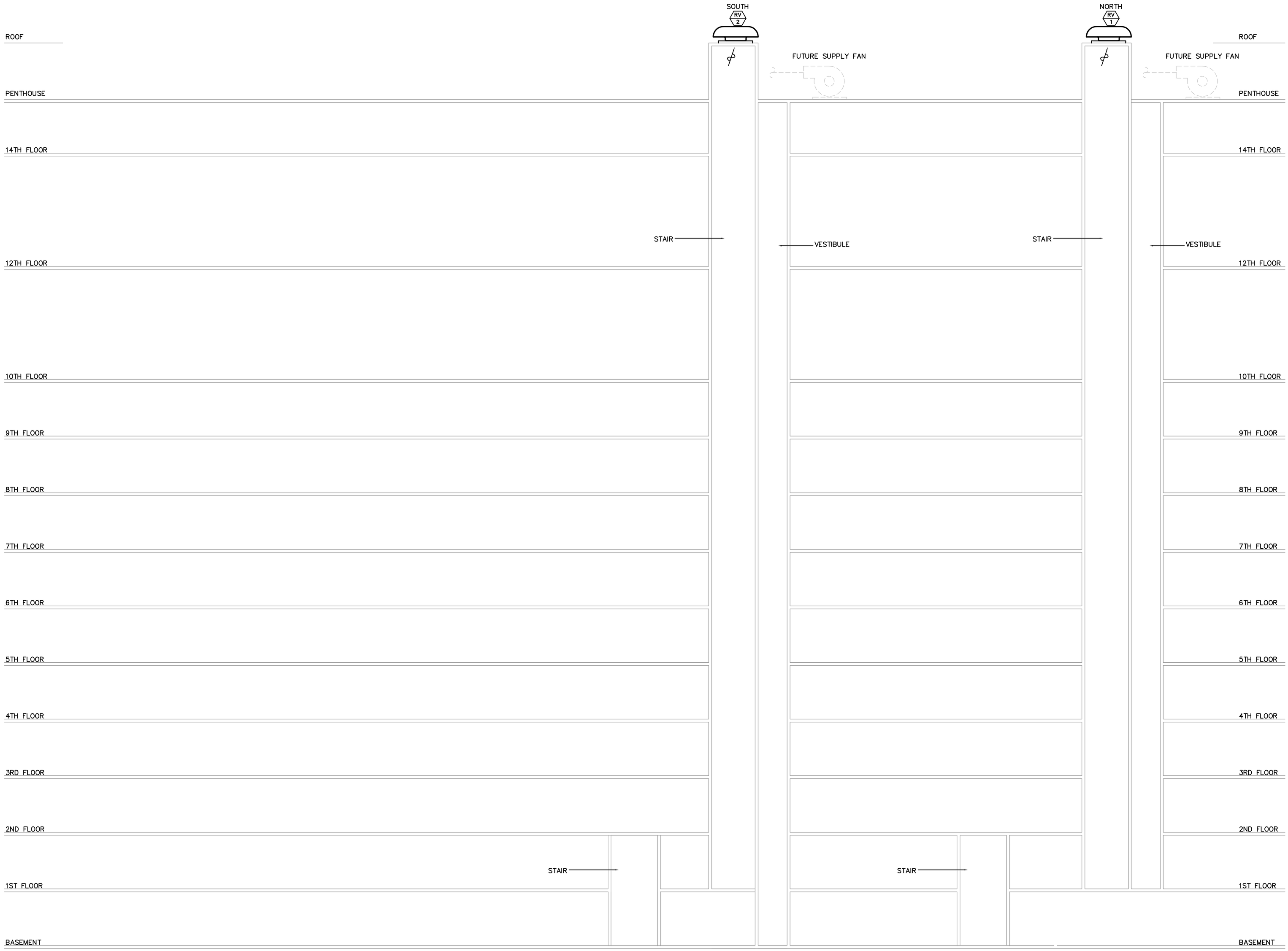

NADEL
Architects Inc.

1990 So. Bundy Dr.
Fourth Floor
Los Angeles, CA 90025

T. 310.826.2100
F. 310.826.0182

www.nadelarc.com

CONSULTANT

REGISTERED PROFESSIONAL ENGINEER
ADAITOR C. YUSON
No. 22542
Exp. 12/31/07
MECHANICAL
STATE OF CALIFORNIA

COUNTY OF LOS ANGELES

THE HALL OF JUSTICE

STRUCTURAL RETROFIT PHASE

REVISIONS

1	
2	
3	
4	
5	
6	

DRAWING TITLE

MECHANICAL RISER DIAGRAM

SCALE : NONE
DATE :
JOB NO :2306-154-00
SHEET NO.

MP3.00

SCOPING DOCUMENTS 100% SUBMISSION AUGUST 2010

ALL DRAWINGS AND WRITTEN MATERIAL APPEARING HEREIN CONSTITUTE THE ORIGINAL AND UNPUBLISHED WORK OF THE ARCHITECT AND THE SAME MAY NOT BE DUPLICATED, USED OR DISCLOSED WITHOUT THE WRITTEN CONSENT OF THE ARCHITECT. COPYRIGHT: NADEL ARCHITECTS INC. ALL RIGHTS RESERVED.

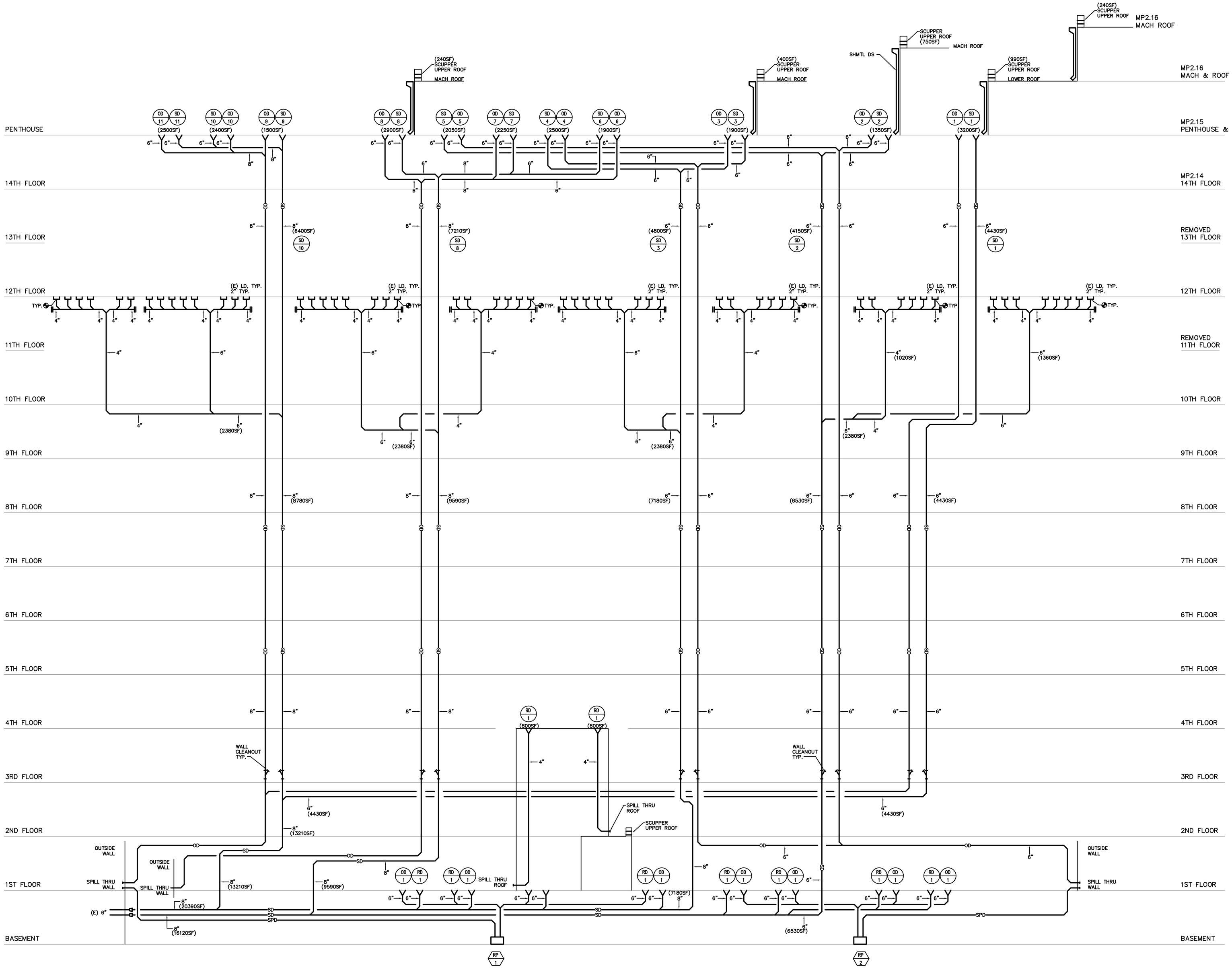

NADEL
Architects Inc.

1990 So. Bundy Dr.
Fourth Floor
Los Angeles, CA 90025

T. 310.826.2100
F. 310.826.0182

www.nadelarc.com

CONSULTANT

REGISTERED PROFESSIONAL ENGINEER
ADAITOR C. YUSON
No.22542
Exp. 12/31/07
MECHANICAL
STATE OF CALIFORNIA

COUNTY OF LOS ANGELES

THE HALL OF JUSTICE

STRUCTURAL RETROFIT PHASE

REVISIONS

DRAWING TITLE

PLUMBING RISER DIAGRAM - STORM DRAIN

SCOPING DOCUMENTS 100% SUBMISSION AUGUST 2010

SCALE : NONE
DATE :
JOB NO :2306-154-00
SHEET NO.

MP3.01

ALL DRAWINGS AND WRITTEN MATERIAL APPEARING HEREIN CONSTITUTE THE ORIGINAL AND UNPUBLISHED WORK OF THE ARCHITECT AND THE SAME MAY NOT BE DUPLICATED, USED OR DISCLOSED WITHOUT THE WRITTEN CONSENT OF THE ARCHITECT. COPYRIGHT: NADEL ARCHITECTS INC. ALL RIGHTS RESERVED.

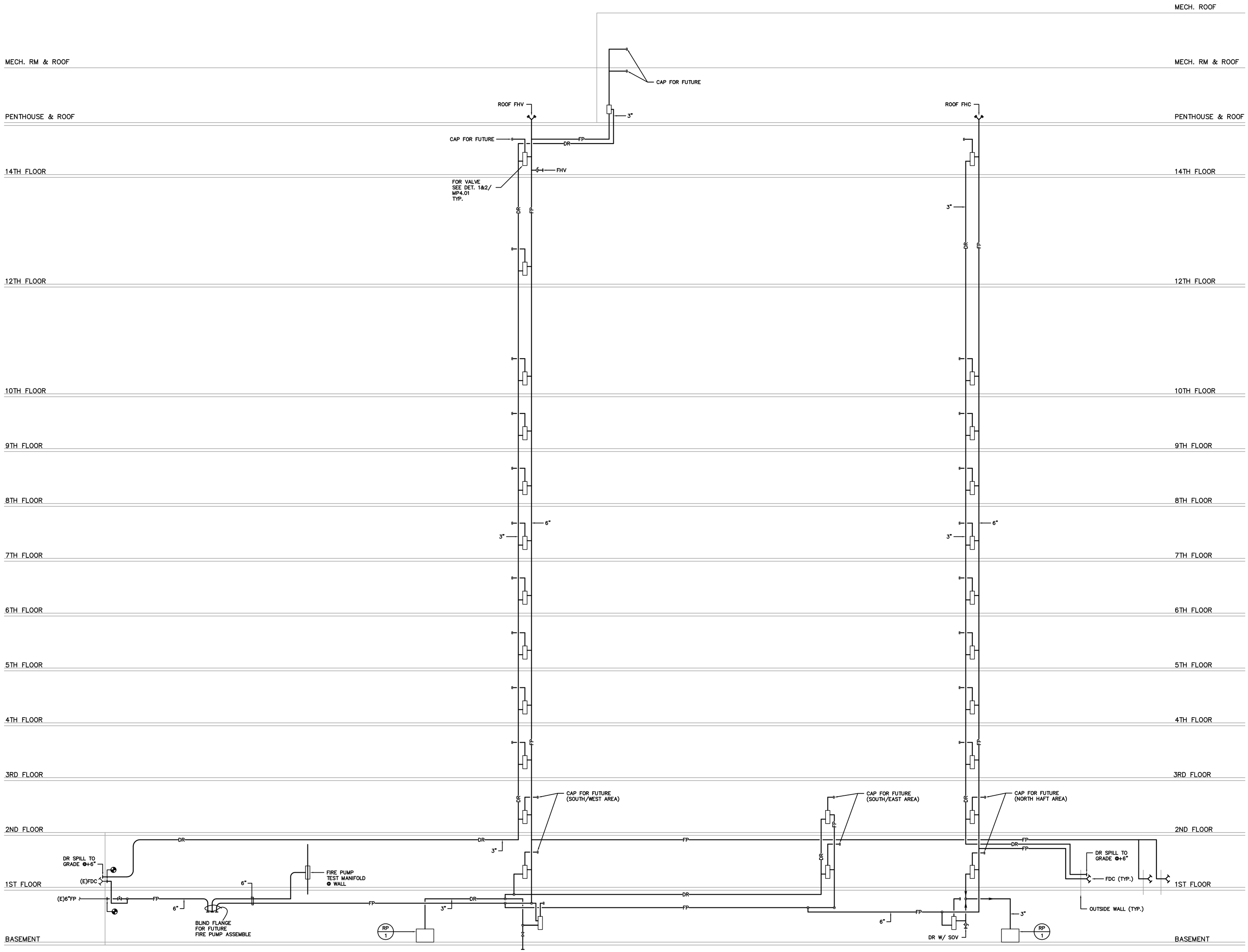

NADEL
Architects Inc.

1990 So. Bundy Dr.
Fourth Floor
Los Angeles, CA 90025

T. 310.826.2100
F. 310.826.0182

www.nadelarc.com

CONSULTANT

REGISTERED PROFESSIONAL ENGINEER
ADAITOR C. YUSON
No. 22542
Exp. 12/31/01
MECHANICAL
STATE OF CALIFORNIA

COUNTY OF LOS ANGELES

THE HALL OF JUSTICE

STRUCTURAL RETROFIT PHASE

REVISIONS

1	
2	
3	
4	
5	
6	

DRAWING TITLE

PLUMBING RISER DIAGRAM - FIRE PROTECTION

SCOPING DOCUMENTS 100% SUBMISSION AUGUST 2010

SCALE : NONE
DATE :
JOB NO :2306-154-00
SHEET NO.

MP3.02

ALL DRAWINGS AND WRITTEN MATERIAL APPEARING HEREIN CONSTITUTE THE ORIGINAL AND UNPUBLISHED WORK OF THE ARCHITECT AND THE SAME MAY NOT BE DUPLICATED, USED OR DISCLOSED WITHOUT THE WRITTEN CONSENT OF THE ARCHITECT. COPYRIGHT: NADEL ARCHITECTS INC. ALL RIGHTS RESERVED.

-

SCALE NONE 7

-

SCALE NONE 4

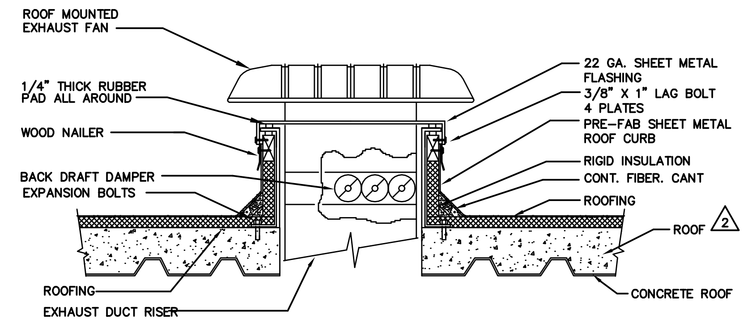

EXHAUST FAN INSTALLATION DETAIL

SCALE NONE 1

-

SCALE NONE 8

-

SCALE NONE 5

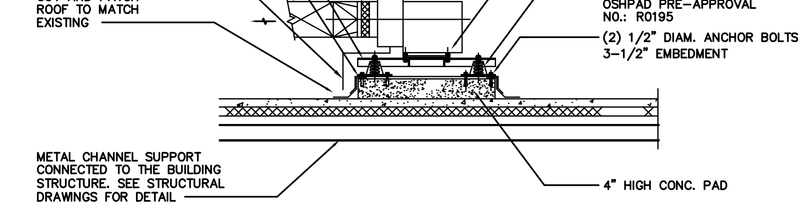

SUPPLY FAN INSTALLATION DETAIL

SCALE NONE 2

-

SCALE NONE 9

-

SCALE NONE 6

-

SCALE NONE 3

ALL DRAWINGS AND WRITTEN MATERIAL APPEARING HEREIN CONSTITUTE THE ORIGINAL AND UNPUBLISHED WORK OF THE ARCHITECT AND THE SAME MAY NOT BE DUPLICATED, USED OR DISCLOSED WITHOUT THE WRITTEN CONSENT OF THE ARCHITECT. COPYRIGHT: NADEL ARCHITECTS INC. ALL RIGHTS RESERVED.

NADEL
Architects Inc.

1990 So. Bundy Dr.
Fourth Floor
Los Angeles, CA 90025

T. 310.826.2100
F. 310.826.0182

www.nadelarc.com

CONSULTANT

REGISTERED PROFESSIONAL ENGINEER
ADAITOR C. YUSON
No.22542
Exp. 12/31/07
MECHANICAL
STATE OF CALIFORNIA

COUNTY OF LOS ANGELES

THE HALL OF JUSTICE

STRUCTURAL RETROFIT PHASE

REVISIONS

1	
2	
3	
4	
5	
6	

DRAWING TITLE

MECHANICAL DETAILS

SCALE : NONE

DATE :

JOB NO :2306-154-00

SHEET NO.

MP4.00

SCOPING DOCUMENTS 100% SUBMISSION AUGUST 2010

ALL DRAWINGS AND WRITTEN MATERIAL APPEARING HEREIN CONSTITUTE THE ORIGINAL AND UNPUBLISHED WORK OF THE ARCHITECT AND THE SAME MAY NOT BE DUPLICATED, USED OR DISCLOSED WITHOUT THE WRITTEN CONSENT OF THE ARCHITECT. COPYRIGHT: NADEL ARCHITECTS INC. ALL RIGHTS RESERVED.

1990.`

CONSULTANT

COUNTY OF LOS ANGELES

THE HALL OF JUSTICE

STRUCTURAL RETROFIT PHASE

REVISIONS

1	
2	
3	
4	
5	
6	

DRAWING TITLE

PLUMBING DETAILS

SCALE : NONE

DATE :JULY 2008

JOB NO :

SHEET NO.

MP4.01

GENERAL NOTES

1. THE SEISMIC BRACING AND ANCHORAGE OF ELECTRICAL CONDUITS, BUS DUCT, WIREWAY, AND CABLE TRAY SHALL BE IN ACCORDANCE WITH THE CALIFORNIA BUILDING CODE, CHAPTER 16 AND "GUIDELINE FOR SEISMIC RESTRAINTS OF MECHANICAL SYSTEMS AND PLUMBING PIPING SYSTEMS," PUBLISHED BY SMACNA AND PPIC, OR THE SUPERSTRUT–SEISMIC RESTRAINT SYSTEM, OR THE KIN–LINE SEISMIC RESTRAINT SYSTEM.

2. ALL ELECTRICAL MATERIALS AND EQUIPMENT SHALL BE NEW AND SHALL BE LISTED BY UNDERWRITER'S LABORATORIES (UL) AND BEAR THEIR LABEL, OR LISTED AND CERTIFIED BY A NATIONALLY RECOGNIZED TESTING AUTHORITY. WHERE UL DOES NOT HAVE A LISTING, CUSTOM MADE EQUIPMENT SHALL HAVE COMPLETE TEST DATA SUBMITTED BY THE MANUFACTURER ATTESTING TO ITS SAFETY. IN ADDITION, THE MATERIALS, EQUIPMENT, AND INSTALLATION SHALL COMPLY WITH THE REQUIREMENTS OF THE FOLLOWING:

   AMERICAN SOCIETY OF TESTING MATERIALS (ASTM)
   INSULATED POWER CABLE ENGINEERS ASSOCIATION (IPCEA)
   NATIONAL ELECTRICAL MANUFACTURERS ASSOCIATION (NEMA)
   AMERICAN STANDARD ASSOCIATION (ASA)
   NATIONAL FIRE PROTECTION AGENCY (NFPA)
   AMERICAN NATIONAL STANDARD INSTITUTE (ANSI)
   CALIFORNIA ELECTRICAL CODE (CEC) – LATEST EDITION
   CALIFORNIA CODE OF REGULATIONS TITLE 24 (CCR)
   INSTITUTE OF ELECTRICAL AND ELECTRONIC ENGINEERS (IEEE)
   ALL LOCAL CODES HAVING JURISDICTION.

   WHERE THE CODES HAVE DIFFERENT LEVELS OF REQUIREMENTS, THE MOST STRINGENT RULE SHALL APPLY.

3. THE CONTRACTOR SHALL VISIT THE SITE INCLUDING ALL AREAS INDICATED ON THE DRAWINGS. HE SHALL THOROUGHLY FAMILIARIZE HIMSELF WITH THE EXISTING CONDITIONS AND BY SUBMITTING A BID, ACCEPTS THE CONDITIONS UNDER WHICH HE SHALL BE REQUIRED TO PERFORM HIS WORK.

4. IT SHALL BE THE CONTRACTOR'S RESPONSIBILITY TO OBTAIN A COMPLETE SET OF CONTRACT DOCUMENTS, ADDENDA, DRAWINGS AND SPECIFICATIONS. HE SHALL CHECK THE DRAWINGS OF THE OTHER TRADES AND SHALL CAREFULLY READ THE ENTIRE SPECIFICATIONS AND DETERMINE HIS RESPONSIBILITIES. FAILURE TO DO SO SHALL NOT RELEASE THE CONTRACTOR FROM DOING THE WORK IN COMPLETE ACCORDANCE WITH THE DRAWINGS AND SPECIFICATIONS.

5. THE CONTRACTOR SHALL SECURE AND PAY FOR ALL PERMITS, FEES, CHARGES, AND INCIDENTAL COSTS NECESSARY FOR EXECUTION AND COMPLETION OF ELECTRICAL WORK, INCLUDING ALL CHARGES BY STATE, COUNTY AND LOCAL GOVERNMENTAL AGENCIES.

6. THE CONTRACTOR SHALL COORDINATE HIS WORK WITH OTHER TRADES AT THE SITE. ANY COSTS TO INSTALL WORK TO ACCOMPLISH SAID COORDINATION WHICH DIFFERS FROM THE WORK AS SHOWN ON THE DRAWINGS SHALL BE INCURRED BY THE CONTRACTOR. ANY DISCREPANCIES, AMBIGUITIES OR CONFLICTS SHALL BE BROUGHT TO THE ATTENTION OF THE ARCHITECT DURING BID TIME FOR CLARIFICATION. ANY SUCH CONFLICTS NOT CLARIFIED PRIOR TO BID SHALL BE SUBJECT TO THE INTERPRETATION OF THE ARCHITECT AT NO ADDITIONAL COST TO THE BUILDING AUTHORITY.

7. THE CONTRACTOR SHALL PROVIDE AND KEEP UP–TO–DATE A COMPLETE RECORD SET OF DRAWINGS. THESE PRINTS SHALL BE CORRECTED DAILY AND SHOW EVERY CHANGE FROM THE ORIGINAL DRAWINGS. THIS SET OF DRAWINGS SHALL BE KEPT ON THE JOB SITE AND SHALL BE USED ONLY AS A RECORD SET. THIS SHALL NOT BE CONSTRUED AS AUTHORIZATION FOR THE CONTRACTOR TO MAKE CHANGES IN THE LAYOUT WITHOUT DEFINITE INSTRUCTION IN EACH CASE. UPON COMPLETION OF THE WORK, A SET OF REPRODUCIBLE CONTRACT DRAWINGS SHALL BE OBTAINED FROM THE ARCHITECT, AND ALL CHANGES AS NOTED ON THE RECORD SET OF DRAWINGS SHALL BE INCORPORATED WITH BLACK INK IN A NEAT, LEGIBLE, UNDERSTANDABLE AND PROFESSIONAL MANNER. FAILURE TO KEEP RECORD DRAWINGS UP–TO–DATE SHALL CONSTITUTE CAUSE FOR WITHHOLDING OF PROGRESS PAYMENTS.

8. AFTER ALL REQUIREMENTS OF THE SPECIFICATIONS AND/OR THE DRAWINGS HAVE BEEN FULLY COMPLETED, THE CITY OF LA REPRESENTATIVE WILL INSPECT THE WORK. THE CONTRACTOR SHALL PROVIDE COMPETENT PERSONNEL TO DEMONSTRATE THE OPERATION OF ANY ITEM OR SYSTEM [TO THE FULL SATISFACTION OF EACH REPRESENTATIVE]. FINAL ACCEPTANCE OF THE WORK WILL BE MADE BY CITY PM AFTER RECEIPT OF APPROVAL AND RECOMMENDATION OF ACCEPTANCE FROM EACH REPRESENTATIVE.

9. IT SHALL BE THE RESPONSIBILITY OF THE CONTRACTOR TO REVIEW AND TO COORDINATE WITH THE MECHANICAL, FIRE PROTECTION AND PLUMBING DRAWINGS FOR DUCTS, LINES AND EQUIPMENT.

10. ALL EQUIPMENT MOUNTED ON ROOF FOR CONNECTION OF HVAC EQUIPMENT SHALL BE MOUNTED ON UNISTRUT STANDS UTILIZING APPROVED PITCH POCKETS, FLASHING, ETC.

11. ALL FINAL CONNECTIONS TO CITY FURNISHED EQUIPMENT SHALL BE MADE BY THE CONTRACTOR.

12. COORDINATE WITH OTHER TRADES AS TO THE EXACT LOCATION OF THEIR RESPECTIVE EQUIPMENT. SUPPLY POWER AND MAKE CONNECTION TO MOTORS AND EQUIPMENT REQUIRING ELECTRICAL CONNECTIONS AS INDICATED ON THE SINGLE LINE DIAGRAM, ELECTRICAL DRAWINGS, AND DRAWINGS OF OTHER TRADES. REVIEW THE DRAWINGS OF DISCONNECT SWITCHES, STARTERS, WIRING, CONTROLS, AND CONDUIT FOR MECHANICAL AND PLUMBING OPERATIONS SHALL BE PROVIDED. THE CONTRACTOR SHALL BE RESPONSIBLE FOR OBTAINING MANUFACTURER'S SHOP DRAWINGS PRIOR TO ROUGHING IN ALL CONDUIT TO THIS EQUIPMENT.

13. CONTRACTOR IS RESPONSIBLE FOR X–RAY OR OTHER DETECTION METHOD THE STRUCTURAL ENGINEER MAY REQUIRE IN ORDER TO LOCATE WALL/FLOOR EMBEDDED REINFORCING STEEL BARS, STRUCTURAL MEMBERS, ETC. PRIOR TO CONDUIT PENETRATION AND OPENINGS IN CONCRETE WALLS OR FLOORS OR STRUCTURAL STEEL MEMBERS. IT SHALL BE AS DIRECTED BY THE STRUCTURAL ENGINEER. PERFORM CORING, SAWCUTTING, PATCHING, AND REFINISHING OF EXISTING WALLS AND SURFACES WHEREVER IT IS NECESSARY TO PENETRATE. OPENINGS SHALL BE SEALED IN AN APPROVED METHOD TO MEET THE FIRE RATING OF THE PARTICULAR WALL, FLOOR OR CEILING. EXACT METHOD AND LOCATIONS OF CONDUIT PENETRATIONS AND OPENINGS IN CONCRETE WALLS OR FLOORS SHALL BE ARCHITECT AND STRUCTURAL ENGINEER APPROVED.

14. CONNECTIONS TO VIBRATING EQUIPMENT AND SEISMIC SEPARATIONS:

   LIQUID–TIGHT FLEXIBLE STEEL CONDUIT IN DRY INTERIOR LOCATIONS.

   LIQUID–TIGHT FLEXIBLE STEEL CONDUIT IN AREAS EXPOSED TO WEATHER, DAMP LOCATIONS, CONNECTIONS TO TRANSFORMER ENCLOSURES, AND FINAL CONNECTIONS TO MOTORS.

   PROVIDE A SEPARATE INSULATED EQUIPMENT GROUNDING CONDUCTOR IN FLEXIBLE CONDUIT RUNS. MAXIMUM LENGTH SHALL BE SIX FEET UNLESS OTHERWISE NOTED.

15. ROUTE EXPOSED CONDUIT AND CONDUIT ABOVE ACCESSIBLE CEILING SPACES PARALLEL AND PERPENDICULAR TO WALLS AND ADJACENT PIPING. ARRANGE CONDUIT TO MAINTAIN HEADROOM AND TO PRESENT A NEAT APPEARANCE.

16. UTILITY PENETRATIONS OF ANY KIND IN FIRE AND SMOKE PARTITIONS AND CEILING ASSEMBLIES, SHALL BE FIRESTOPPED AND SEALED WITH AN APPROVED MATERIAL SECURELY INSTALLED. STEEL ELECTRICAL OUTLET BOXES WHICH DO NOT EXCEED 16 SQUARE INCHES IN AREA, NEED NOT BE PROTECTED IN ONE HOUR OR TWO HOUR FIRE RATED WALLS, PARTITIONS, CEILINGS, OR AREA SEPARATION UNLESS THEY:

   OCCUR ON OPPOSITE SIDES OF THE WALL WITHIN 24 INCH HORIZONTAL DISTANCE OF ONE ANOTHER. IN THIS CASE, ONLY ONE OUTLET BOX NEED TO PROTECTED BY AN APPROVED FIRESTOP MATERIAL OR DETAIL TO CORRECT THIS CONDITION.

   OCCUR IN COMBINATION WITH OUTLET BOXES OF ANY SIZE SUCH THAT THE AGGREGATE AREA OF UNPROTECTED OUTLET BOXES EXCEEDS 100 SQUARE INCHES IN ANY 100 SQUARE FEET OF WALL AREA. IN THIS CASE, ONLY A SUFFICIENT NUMBER OF OUTLET BOXES NEED BE PROTECTED BY AN APPROVED MATERIAL OR DETAIL TO DECREASE THE AGGREGATE AREA OF UNPROTECTED UTILITY BOXES TO LESS THAN 100 SQUARE INCHES IN ANY 100 SQUARE FEET OF WALL.

   STEEL ELECTRICAL OUTLET BOXES WHICH EXCEED 16 SQUARE INCHES AREA, AND ALL OTHER STEEL UTILITY OUTLET BOXES REGARDLESS OF SIZE, SHALL BE PROTECTED BY AN APPROVED FIRESTOP MATERIAL AS LISTED OR EQUAL.

   FIRESTOPPING MATERIAL: MPP–1 MOLDABLE PUTTY PADS
   3M CONTRACTOR PRODUCTS
   MINNEAPOLIS, MN
   3M TEST REPORT NO. 1167
   DATED AUGUST 21, 1987

   FSP FIRESTOP PUTTY PADS
   HEVI–DUTY NELSON PRODUCTS
   TULSA, OK

   FLAMESAFE FSP 1077 FIRESTOP PADS
   INTERNATIONAL PROTECTIVE COATINGS
   OAKHURST, NJ

   STEEL UTILITY BOXES WHICH EXCEED 100 SQUARE INCHES IN AREA SHALL BE PROTECTED BY ENCASEMENT.

   UTILITY AND ELECTRICAL OUTLETS OR BOXES SHALL BE SECURELY FASTENED TO THE STUD OF FRAMING OF THE WALL, PARTITION OR CEILING ASSEMBLY. THE OPENING IN THE GYPSUM BOARD FACING SHALL BE CUT SO THAT THE CLEARANCE BETWEEN THE BOX AND THE GYPSUM BOARD DOES NOT EXCEED 1/8 INCH. IN SMOKE WALLS OR PARTITIONS, THE 1/8 INCH CLEARANCE SHALL BE FILLED WITH AN APPROVED FIRE–RATED SEALANT.

17. STRAIGHT FEEDER, BRANCH CIRCUIT, AND CONDUIT RUNS SHALL BE PROVIDED WITH SUFFICIENT PULL BOXES OR JUNCTION BOXES TO LIMIT THE MAXIMUM LENGTH OF ANY SINGLE CABLE PULL TO 100 FEET. PULL BOXES SHALL BE SIZED PER CODE OR AS INDICATED ON DRAWINGS. LOCATIONS SHALL BE DETERMINED IN THE FIELD OR AS INDICATED ON THE DRAWINGS.

18. DRAWINGS ARE DIAGRAMMATIC ONLY. ROUTING OF RACEWAYS SHALL BE AT THE OPTION OF THE CONTRACTOR UNLESS OTHERWISE NOTED AND SHALL BE COORDINATED WITH OTHER SECTIONS. DO NOT SCALE THE ELECTRICAL DRAWINGS FOR LOCATIONS OF ANY ELECTRICAL, ARCHITECTURAL, STRUCTURAL, CIVIL, OR MECHANICAL ITEMS OR FEATURES. EXECUTE THE WORK SO AS TO SECURE THE BEST POSSIBLE INSTALLATION IN THE AVAILABLE SPACE AND TO OVERCOME LOCAL DIFFICULTIES DUE TO SPACE LIMITATIONS OR EXISTING CONDITIONS. THE CONTRACTOR IS RESPONSIBLE FOR THE CORRECT PLACING OF HIS WORK. WHERE CONFLICTS OCCUR IN PLANS AND/OR SPECIFICATIONS, THE MOST STRINGENT APPLICATION SHALL APPLY AND SHALL BE PART OF THE BASE BID.

19. THE CONTRACTOR SHALL BID THE PROJECT PER PLANS AND SPECIFICATIONS, WHEN SUBSTITUTING MATERIALS OR EQUIPMENT THE CONTRACTOR SHALL SUBMIT CATALOG CUT SHEETS AND UNIT COSTS FOR THE PROPOSED SUBSTITUTION FOR APPROVAL. ALTERNATE REPLACEMENT PHASING SCHEMES MAYBE SUBMITTED BY THE CONTRACTOR AS PART OF HIS BID PROPOSAL AND COST, SUBJECT FOR REVIEW BY THE ENGINEER.

20. IT SHALL BE THE RESPONSIBILITY OF THE CONTRACTOR PRIOR TO SUBMITTING HIS BID, TO VISIT THE SITE AND INSPECT THE ENTIRE AREA OF THE WORK. THE CONTRACTOR SHALL COMPLETELY FAMILIARIZE HIMSELF WITH ALL EXISTING CONDITIONS AFFECTING THE WORK. IF IN THE EXECUTION OF HIS WORK EXTRA WORK IS NECESSARY DUE TO THE CONTRACTOR'S FAILURE TO BE FAMILIAR WITH EXISTING CONDITIONS, SUCH EXTRA WORK SHALL BE FURNISHED AND INSTALLED BY THE CONTRACTOR AT NO ADDITIONAL COST THE CITY.

21. INCLUDE THE COST OF ALL SMALL DETAILS AND INCIDENTAL WORK NOT SHOWN OR SPECIFIED, BUT WHICH CAN BE REASONABLY INFERRED AS REQUIRED FOR COMPLETE AND SATISFACTORY SYSTEM.

22. PROVIDE ALL CUTTING AND PATCHING REQUIRED FOR INSTALLATION OF THE ELECTRICAL WORK, AS DIRECTED BY THE ARCHITECT/ENGINEER.

23. THE CITY OF LA RESERVES THE RIGHT TO RELOCATE, PRIOR TO INSTALLATION, ALL EQUIPMENT, DEVICES, COMPONENTS, AND OUTLETS TO A MAXIMUM DISTANCE OF TEN (10) FEET IN ANY DIRECTION FROM THE LOCATION INDICATED ON THE DRAWINGS, WITH NO ADDITIONAL COST TO THE CITY.

24. FURNISH AND INSTALL ALL SUPPORTS, HANGERS AND MISCELLANEOUS METALS, SUCH AS GALVANIZED IRON PIPE STANCHIONS, RACKS, FITTINGS, ETC., REQUIRED FOR PROPER INSTALLATION OF THE WORK. ALL MISCELLANEOUS RACKS AND FITTINGS SHALL BE GALVANIZED, AND SHALL BE EITHER KINDORF CHANNEL, POWER STRUT OR UNISTRUT, UNLESS OTHERWISE SPECIFIED.

25. FURNISH, INSTALL, CONNECT, MAINTAIN AND THEN REMOVE AFTER COMPLETION OF CONSTRUCTION A TEMPORARY POWER AND LIGHTING SYSTEM. INCLUDE ALL WIRES, CABLES, FUSED SWITCHES, PANELS, GROUND CONNECTIONS, LAMPS, SOCKETS, RECEPTACLES, FITTINGS, EQUIPMENT, ETC., REQUIRED FOR A COMPLETE SYSTEM. INCLUDED IN THE MAINTENACE OF THE TEMPORARY LIGHTING SYSTEM IS THE REPLACEMENT OF DAMAGED OR BURNED OUT OUT LAMPS. COMPLY WITH THE LATEST EDITION OF THE CALIFORNIA ELECTRICAL CODE (CEC) ARTICLE 527.

26. THE ELECTRICAL CONTRACTOR SHALL MAKE ALL FINAL CONNECTIONS TO THE EQUIPMENT PROVIDED BY OTHERS, UON, AND SHALL SUPPLY AND INSTALL ANY REQUIRED SAFETY DISCONNECT SWITCHES WHEN NOT PROVIDED WITH THE EQUIPMENT. ALL CONTROL WIRING FOR THE EQUIPMENT SHALL BE BY OTHERS.

27 TEST ALL WORK IN THE PRESENCE OF THE ENGINEER OR CITY OF LA REPRESENTATIVE WHEN THE WORK IS FINALLY COMPLETED TO ENSURE THAT ALL PORTIONS ARE FREE FROM SHORT CIRCUIT OR GROUNDS.

28. ACTUAL INSTALLATION OF CONDUITS MADE IN THE FIELD SHALL BE KEPT CLEAR OF ALL PIPING AND EQUIPMENT, BENDS, TURNS, AND PULL BOXES SHALL BE PROVIDED AS REQUIRED IN ACCORDANCE WITH FIELD CONDITIONS. CONDUIT SUPPORTS, AND SPACING SHALL BE IN ACCORDANCE WITH THE LATEST EDITION OF THE CEC. ALL CONDUIT SUPPORTS, BOX SUPPORTS AND MOUNTING HARDWARE SHALL BE OF NON–RUSTING, CORROSION RESISTANT MATERIALS AND CONSTRUCTION. THE ELECTRICAL CONTRACTOR SHALL AVOID USE OF DISSIMILAR METALS FOR CONDUIT RUNS AND BOX CONNECTIONS TO MINIMIZE POSSIBILITY OF ELECTROLYSIS AND CORROSION. WHERE DISSIMILAR METALS MUST COME IN CONTACT, COAT CONTACT SURFACES WITH CORROSION INHIBITING COMPOUND BEFORE ASSEMBLING. CORROSION INHIBITING COMPOUND SHALL BE ELECTRICALLY CONDUCTING. THE ELECTRICAL CONTRACTOR SHALL PROVIDE SUITABLE SIZED GROUNDING CONDUCTORS AND CONNECT PER LATEST EDITION OF CEC REQUIREMENTS IN ALL CONDUIT RUNS. ALL CONDUITS SHALL CONTAIN A SEPARATE COPPER, GREEN INSULATED GROUND WIRE. THERE SHALL BE NO EXCEPTIONS TO THIS RULE.

29. CONTRACTOR SHALL ENSURE THAT ALL ELECTRICAL EQUIPMENT AND MATERIALS ARE ADEQUATELY PROTECTED FROM DAMAGE, DETERIORIATION, THEFT, AND INCLEMENT WEATHER DURING DEMOLITION AND CONSTRUCTION.

30. THE LOCATION AND METHOD FOR CONNECTION TO EACH ITEM OF EQUIPMENT SHALL BE VERIFIED BY CONTRACTOR PRIOR TO ROUGHING–IN. ANY DISCREPANCIES SHALL BE BROUGHT TO ATTENTION FOR RESOLUTION.

31. ALL EQUIPMENT WIRING AND DEVICES INSTALLED OR SUPPLIED BY ELECTRICAL CONTRACTOR WILL BE FULLY TESTED BY CONTRACTOR PRIOR TO TURNING ON POWER. CONTRACTOR AT HIS EXPENSE SHALL REPLACE ANY EQUIPMENT DAMAGED BY CONTRACTOR'S FAILURE TO PERFORM THIS STEP.

32. THE CONTRACTOR SHALL SUBMIT 6 COPIES OF SHOP DRAWINGS AND MATERIAL LIST FOR APPROVAL WITHIN 30 DAYS OF AWARD OF CONTRACT. PRIOR TO SUBMITTING THE SHOP DRAWINGS. THE CONTRACTOR SHALL VERIFY DIMENSIONS OF ALL EQUIPMENT. THE ACTUAL DIMENSIONS SHALL BE COORDINATED WITH AVAILABLE SPACE. ALL APPLICABLE CODE REQUIREMENTS RELATING TO WORKING SPACE AROUND EQUIPMENT SHALL BE THE RESPONSIBILITY OF THE CONTRACTOR.

33. "OR APPROVED EQUAL" MEANS EQUIVALENT OR SUPERIOR IN PERFORMANCE, MATERIALS, WORKMANSHIP AND APPEARANCE TO THE SPECIFIED EQUIPMENT AND ACCEPTED BY COUNTY PM AND THE ELECTRICAL ENGINEER ON RECORD.

34. BEFORE FINAL ACCEPTANCE OF WORK, THE CONTRACTOR SHALL INSURE THAT ALL EQUIPMENT IS INSTALLED CORRECTLY AND FUNCTIONING PROPERLY BY PERFORMING THE REQUIRES FIELD TESTS.

SYMBOL LIST

(M) THREE PHASE FRACTIONAL OR INTEGRAL HORSEPOWER MOTOR. NUMERAL IN PLACE OF "M" INDICATES HORSEPOWER.

3P 100AF 70AT — MOLDED CASE CIRCUIT BREAKER. "AF" INDICATES AMPERE FRAME. "AT" INDICATES AMPERE TRIP RATING AND NUMBER OF POLES AS INDICATED. SUBSCRIPT INDICATES TYPE.

NO SUBSCRIPT	THERMAL MAGNETIC
NA	NON–AUTOMATIC
MO	MAGNETIC ONLY
CL	CURRENT LIMITING
SS	SOLID STATE
EM	ELECTRONIC METERING PACKING

100AF 100AT 3P — DRAW–OUT TYPE CIRCUIT BREAKER.

100AS 90FU 3P — FUSED SWITCH. "AS" INDICATED AMPERE SWITCH RATING, "AFU" INDICATES AMPERE FUSE RATING, NUMBER OF POLES AS INDICATED.

KNIFE SWITCH AND FUSE.

VOLTAGE TRANSFORMER. FLOOR MOUNTD, COPPER WOUND, DRY TYPE UNLESS SPECIFIED OTHERWISE.

PT — POTENTIAL TRANSFORMER.

CURRENT TRANSFORMER.

GROUND, "GRD".

T — TRANSFORMER, PRIMARY & SECONDARY VOLTAGE AND KVA RATING AS NOTED. TYPE AND CONFIGURATION AS SPECIFIED. PROVIDE DRY TYPE, COPPER WOUND, WALL OR BOX MOUNTED UNLESS NOTED OTHERWISE.

VS — VOLTMETER SWITCH. SEVEN–POSITION, #A–N, #B–N, #C–N, #AB, #BC, #CA AND OFF.

(V) VOLTMETER.

AS — AMMETER SWITCH. FOUR POSITION #A, #B, #C AND OFF.

(A) AMMETER.

(KW) KILOWATT METER USAGE.

(KVA) KILO–VOLT AMPERE METER USAGE.

DRAW–OUT AIR CIRCUIT BREAKER

3k Sa — SMTCH. LOWER CASE LETTER AT BOTTOM INDICATES OUTLETS CONTROLLED. CAPITAL SUPERSCRIPT INDICATES SWITCH TYPE.

NO SUPERSCRIPT	SINGLE POLE SWITCH
2	DOUBLE POLE
3	THREE WAY
4	FOUR WAY
I	ILLUMINATED HANDLE
K	KEYED SWITCH
LC	LOCKABLE COVER
M	MANUAL MOTOR STARTER WITH THERMAL OVERLOAD PROTECTION
MC	MOMENTARY CONTACT
P	PILOT LIGHT
PR	PRESS TYPE
TP	THREE POSITION
T	TIMER, 0–6 HR ROTARY OR AS NOTED

E E — EQUIPMENT WITH "E" ADJACENT IS EXISITNG TO REMAIN.

R R — EQUIPMENT WITH "R" ADJACENT IS EXISTING TO BE COMPLETELY DISCONNECTED AND REMOVED.

RR RR — EQUIPMENT WITH "RR" ADJACENT IS EXISTING TO BE DISCONNECTED, REMOVED AND RELOCATED TO NEW LOCATION AND RECONNECTED AS REQUIRED.

ER ER — RELOCATED EQUIPMENT SHOWN IN NEW LOCATION.

—E— EXISTING CONDUIT RUN TO REMAIN. EXISTING CONDUCTORS TO REMAIN UNLESS NOTED OTHERWISE ON DRAWINGS.

—EA— EXISTING CONDUIT RUN TO BE ABANDONED. REMOVE CONDUCTORS AND CAP ENDS OF CONDUIT.

—EX— EXISTING CONDUIT RUN TO BE REWIRED. REFER TO PLANS FOR WIRING REQUIREMENTS.

—R— EXISTING CONDUIT AND WIRE RUN TO BE COMPLETELY DISCONNECTED AND REMOVED BACK TO LAST REMAINING OUTLET OR DEVICE.

—R–X–E– "X" INDICATES APPROXIMATE POINT OF INTERCEPTION OF EXISTING CONDUIT RUN. CONDUIT TO BE REMOVED AT "R" SIDE OF "X". REMOVE ALL CONDUCTORS PRIOR TO CUTTING CONDUIT. EXACT LOCATION OF ALL CONDUITS SHALL BE FIELD VERIFIED. EXTEND CONDUIT AS INDICATED ON PLANS.

——— CONDUIT RUN, CONCEALED IN CEILING, WALLS OR UNDER FLOORS.

- - - - - - - CONDUIT RUN EXPOSED.

— — CONDUIT RUN UNDERGROUND.

CONDUIT STUBBED OUT AND CAPPED. PULL LINE IN PLACE.

TWO GROUND FAULT INTERRUPTING TYPE DUPLEX RECEPTACLES IN 4S BOX, 20 AMP, 125 VOLT, 2–POLE, 3–WIRE.

SURFACE MOUNTED BRANCH CIRCUIT PANELBOARD.

RECESSED BRANCH CIRCUIT PANELBOARD.

NEMA TYPE CS 6369 RECEPTACLE 50 AMP, 125/250 VOLT

(P1) PANEL DESIGNATION

PULLBOX

W — WALL MOUNTED SQUARE BASKET WRAPAROUND FLUORESCENT LIGHTING FIXTURE WITH FLAT BOTTOM ACRYLIC DIFFUSER "LITHONIA LIGHTING" CAT #SB–2–32–120V–GEB 10–EL.

SURFACE MOUNTED SWITCHES

100AS — NON–FUSED DISCONNECT SWITCH. "AS" INDICATES SWITCH AMPERE RATING.

100AS 60AFU — FUSED DISCONNECT SWITCH. "AS" INDICATES SWITCH AMPERE RATING. "AFU" INDICATES FUSE AMPERE RATING.

VFD II — MAGNETIC MOTOR STARTER. ROMAN NUMERAL INDICATES NEMA STARTER SIZE. ADDITIONAL SUBSCRIPTS INDICATE STARTER TYPE AND SIZE. (TYPICAL FOR ALL MAGNETIC STARTER SYMBOLS.)

NO SUBSCRIPT	– FULL VOLTAGE, NON REVERSING
PR	– PRIMARY RESISTOR REDUCED VOLTAGE
AT	– AUTOTRANSFORMER REDUCED VOLTAGE
WD	– WYE–DELTA REDUCED VOLTAGE
PW	– PART WINDING REDUCED VOLTAGE
SS	– SOLID STATE REDUCED VOLTAGE
REV	– REVERSING TYPE
2S	– TWO SPEED
2W	– TWO WINDINGS
CH	– CONSTANT HORSEPOWER
CT	– CONSTANT TORQUE
VT	– VARIABLE TORQUE
VFD	– VARIABLE FREQUENCY DRIVE

COMBINATION MAGNETIC MOTOR STARTER AND NON–FUSED DISCONNECT SWITCH.

F II — COMBINATION MAGNETIC MOTOR STARTER AND FUSED DISCONNECT SWITCH.

COMBINATION MAGNETIC MOTOR STARTER AND CIRCUIT BREAKER.

COMBINATION MAGNETIC MOTOR STARTER AND MOTOR CIRCUIT PROTECTOR.

SINGLE PHASE FRACTIONAL OR INTEGRAL HORSEPOWER MOTOR.

DEMOLITION NOTES

1. IN GENERAL, THE DEMOLITION PLAN SHOWS ONLY EXISTING EQUIPMENT TO REMAIN; ALL OTHER ELECTRICAL EQUIPMENT, WHETHER SHOWN ON THIS DRAWING OR NOT THAT IS LOCATED IN REMOVED WALLS, FLOORS OR CEILINGS, SHALL BE REMOVED UNLESS OTHERWISE NOTED.
2. THE CONTRACTOR SHALL VISIT THE SITE SPECIFICALLY INCLUDING ALL AREAS INDICATED ON THE DRAWINGS. HE SHALL THOROUGHLY FAMILIARIZE HIMSELF WITH THESE EXISTING CONDITIONS, AND BY SUBMITTING A BID ACCEPTS CONDITIONS UNDER WHICH HE WILL BE REQUIRED TO PERFORM HIS WORK.
3. IT SHALL BE THE ELECTRICAL CONTRACTOR'S RESPONSIBILITY TO DISCONNECT AND REMOVE ALL EXISTING LIGHTING FIXTURES, RECEPTACLES, ELECTRICAL EQUIPMENT, ETC., AFFECTED BY THE DEMOLITION PHASE. THIS WILL INCLUDE REROUTING, OR THE EXTENSION OF, EXISTING CONDUIT AND FEEDERS WHERE NECESSARY TO MAINTAIN THE CONTINUITY OF EXISTING EQUIPMENT REMAINING.
4. THE ELECTRICAL CONTRACTOR SHALL COORDINATE WITH THE OWNER PRIOR TO REMOVAL OF EXISTING ELECTRICAL EQUIPMENT, AND TURN OVER REMOVED EQUIPMENT THAT THE OWNER REQUESTS IN AN "AS–FOUND" CONDITION. EQUIPMENT THAT IS TO BE TURNED OVER SHALL BE BOXED AND TAGGED TO IDENTIFY THE SPECIFIC EQUIPMENT.
5. PANELS INDENTIFIED TO REMAIN WHICH ARE LOCATED IN A WALL THAT IS TO BE DEMOLISHED, SHALL REMAIN IN AN OPERATIVE CONDITION. THIS CONTRACTOR SHALL PROVIDE AND INSTALL ALL EQUIPMENT REQUIRED TO TEMPORARILY SUPPORT PANELS. PANELS MAY BE TEMPORARY FREESTANDING, MOUNTED IN TEMPORARY PORTION OF WALLS TO BE DEMOLISHED LATER, ETC. CHECK WITH ARCHITECT AND ENGINEER FOR APPROVAL OF SUPPORTS.
6. ALL FEEDERS, CIRCUIT NUMBERS AND EXISTING CONDUIT HOMERUNS SHOWN ON THESE DRAWINGS WERE TAKEN FROM EXISTING RECORD DRAWINGS. IT IS THIS CONTRACTOR'S RESPONSIBILITY TO VERIFY LOCATIONS OF FEEDER, HOMERUNS, AND ADJUST CIRCUIT NUMBERS ACCORDING TO EXISTING CONDITIONS IF REQUIRED.
7. IT SHALL BE THE RESPONSIBILITY OF THIS CONTRACTOR TO MAINTAIN CONTINUITY OF ALL ELECTRICAL SYSTEMS, EQUIPMENT, ETC., REMAINING IN OPERATION WHICH ARE BEING FED BY AN EQUIPMENT. MAINTAINING CONTINUITY SHALL CONSIST OF REROUTING CONDUIT, WIRING, ETC., AS REQUIRED.
8. IN SOME INSTANCES, IT MAY BE NECESSARY FOR THE ELECTRICAL CONTRACTOR TO TEMPORARILY RELOCATE, REROUTE, ETC., EXISTING ELECTRICAL EQUIPMENT. THIS SHALL BE DONE SO THAT THE SYSTEMS IN ALL PHASES (THOSE COMPLETED AND THOSE YET TO BEGIN), ARE IN COMPLETE, OPERABLE, CONDITION AS CONSTRUCTION PROCEEDS THROUGH EACH PHASE.
9. WHERE NEW CIRCUITS ARE SHOWN CROSSING PHASING BOUNDARIES (I.E., CORRIDOR LIGHTING, ETC.) THIS CONTRACTOR SHALL CONNECT ALL EQUIPMENT, ETC., IN THE PHASE WHICH IS THEN UNDER CONSTRUCTION. CONTRACTOR SHALL STUBOUT ALL REQUIRED CONDUIT AND WIRING ACROSS PHASE BOUNDARIES; THEN, PICK UP AND EXTEND THESE CONDUIT RUNS WHEN CONSTRUCTION BEGINS IN THE ADJACENT PHASE.
10. DURING EACH PHASE OF DEMOLITION, ALL CIRCUITS FROM EXISTING PANELS WHICH FEED AREAS OUTSIDE THE BOUNDARIES OF THAT PHASE, SHALL BE MAINTAINED.
11. ALL ABANDONED OUTLETS INCLUDING LIGHT, RECEPTACLES, TELEPHONE, ETC., SHALL BE COVERED AND PATCHED TO MATCH THE FINISH OF SURROUNDING WALL OR CEILING TO THE SATISFACTION OF THE OWNER.
12. CONTRACTOR SHALL TAKE PHOTOGRAPHS OF ELECTRICAL ROOM INTERIORS SHOWING ALL ELECTRICAL EQUIPMENT PRIOR TO DISMANTLING/REMOVAL OF SUCH EQUIPMENT ON WHICH HE WILL BE REQUIRED TO REPLACE AND INSTALL.
13. CONTRACTOR SHALL IDENTIFY, MEASURE AND DIMENSION ALL EXISTING CONDUITS AND FEEDERS TERMINATING TO AN EQUIPMENT THAT NEEDS TO BE DISMANTLED AND REMOVED BEFORE DISMANTLING AND REMOVAL.
14. PANELS OR TERMINAL CABINETS WHICH ARE LOCATED IN A WALL THAT IS TO BE DEMOLISHED, SHALL REMAIN IN AN OPERATIVE CONDITION UNTIL ALL AREAS FED BY THE RELATED PANELS HAVE BEEN DEMOLISHED. THIS CONTRACTOR SHALL PROVIDE AND INSTALL ALL EQUIPMENT REQUIRED TO TEMPORARILY SUPPORT PANELS. PANELS MAY BE TEMPORARILY FREE STANDING, MOUNTED IN TEMPORARY PORTION OF WALLS TO BE DEMOLISHED LATER, ETC. CHECK WITH ARCHITECT AND ENGINEER FOR APPROVAL OF SUPPORTS. IT SHALL ALSO BE THIS CONTRACTOR'S RESPONSIBILITY TO RELOCATE AND RECONNECT ALL CIRCUITS ON A TEMPORARY BASIS IF THE PANELS, TERMINAL CABINETS, ETS., CONFLICT WITH THE NEW CONSTRUCTION PHASES, AND THEN REMOVED AFTER COMPLETION OF PHASES.
15. WHERE EXISTING WALLS HAVE BEEN REMOVED, AND THERE ARE EXISTING CONDUIT FEEDS WHICH HAVE BEEN CUT–OFF AND CAPPED FLUSH WITH FLOOR, IT IS THE CONTRACTOR'S RESPONSIBILITY TO IDENTIFY AND DIMENSION ALL SUCH CONDUITS ON THE "AS–BUILT" DRAWINGS UNLESS OTHERWISE NOTED.
16. ANY EQUIPMENT, FEEDERS, ETC. TO REMAIN AFFECTED BY CONSTRUCTION OF NEW SHEAR WALLS AND CONCRETE DRAG BEAMS SHALL BE MOVED AWAY FROM THE NEW WALLS PER CEC ARTICLE 110 (WORKING CLEARANCE). IT IS THE CONTRACTOR'S RESPONSIBILITY TO IDENTIFY AND LOCATE EQUIPMENT, FEEDERS, PULLBOXES, ETC. THAT REQUIRED RELOCATION. CONTRACTOR SHALL RELOCATE EQUI

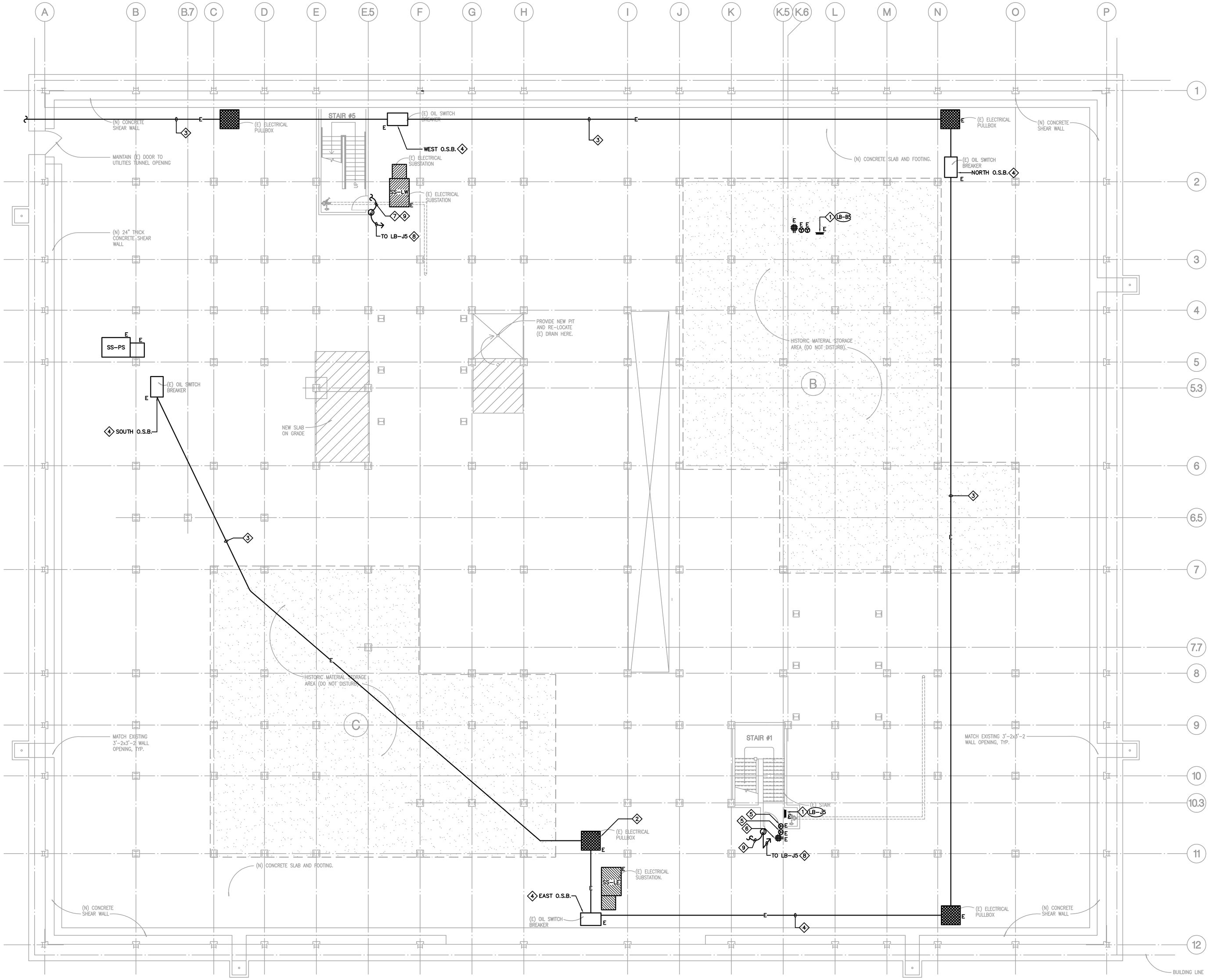

SHEET NOTES

1. EXISTING 120/240V, 1ø, PNL. TO BE UTILIZED FOR TEMPORARY POWER.
2. EXISTING OVERHEAD PULL BOX FOR TEMPORARY POWER.
3. EXISTING OVERHEAD 5KV FOR TEMPORARY POWER.
4. EXISTING SECTIONALIZED OIL FILLED LOAD BREAK SWITCH RATED 400 AMP AT 4KV, FOR TEMPORARY POWER.
5. EXISTING WELDING RECEPTACLE FOR TEMPORARY POWER DURING CONSTRUCTION WORK.
6. EXISTING 20A., 120V. DUPLEX RECEPTACLE FOR TEMPORARY POWER DURING CONSTRUCTION.
7. PROVIDE 120V POWER TO ELECTRIFIED LOCK. CONTRACTOR SHALL COORDINATE THE REQUIREMENT OF ELECTRIFIED LOCK WITH OWNER PRIOR TO THE START OF ROUGH-IN WORK.
8. PROVIDE 2-#10, 1-#10 GROUND. PROVIDE LOW-VOLTAGE TRANSFORMER TO SERVE ELECTRIFIED LOCK. PROVIDE 1P, 20AT BREAKER AT PANEL.
9. PROVIDE CONDUIT AND WIRING THROUGH ELECTRIFIED TRANSFER HINGE.

0' 2' 4' 6' 8' 16'

N

BASEMENT FLOOR PLAN | SCALE: 1/8"=1'-0" | 1

NADEL
Architects Inc.

1990 So. Bundy Dr.
Fourth Floor
Los Angeles, CA 90025

T. 310.826.2100
F. 310.826.0182

www.nadelarc.com

CONSULTANT
TMAD TAYLOR & GAINES
• STRUCTURAL • MECHANICAL • ELECTRICAL • CIVIL
100 South Anaheim Boulevard, Suite 150
Anaheim, California 92805
Phone: 714.490.5555
Fax: 714.490.5560
Project No. 2306-154-00

REGISTERED PROFESSIONAL ENGINEER
REY R. SANGUEZA
No. E16622
Exp. 06/30/08
ELECTRICAL
STATE OF CALIFORNIA

COUNTY OF LOS ANGELES
THE HALL OF JUSTICE
STRUCTURAL RETROFIT PHASE

REVISIONS

DRAWING TITLE

BASEMENT FLOOR PLAN

SCOPING DOCUMENTS 100% SUBMISSION AUGUST 2010

SCALE : 1/8"=1'-0"
DATE :
JOB NO : 2306-154-00
SHEET NO.
E2.00

T:\23CAD\2306\2306-154-00\CONSTRUCTION\MPE\E2.00.dwg Jul 08, 2008 - 11:52am

ALL DRAWINGS AND WRITTEN MATERIAL APPEARING HEREIN CONSTITUTE THE ORIGINAL AND UNPUBLISHED WORK OF THE ARCHITECT AND THE SAME MAY NOT BE DUPLICATED, USED OR DISCLOSED WITHOUT THE WRITTEN CONSENT OF THE ARCHITECT. COPYRIGHT: NADEL ARCHITECTS INC. ALL RIGHTS RESERVED.

SHEET NOTES

1. EXISTING 120/240V, 1ø, PNL. TO BE UTILIZED FOR TEMPORARY POWER.
2. EXISTING WELDING RECEPTACLE FOR TEMPORARY POWER DURING CONSTRUCTION.
3. EXISTING 20A, 120V. DUPLEX RECEPTACLE FOR TEMPORARY POWER DURING CONSTRUCTION.
4. PROVIDE 120V POWER TO ELECTRIFIED LOCK. CONTRACTOR SHALL COORDINATE THE REQUIREMENT OF ELECTRIFIED LOCK WITH OWNER PRIOR TO THE START OF ROUGH-IN WORK.
5. PROVIDE 2-#10, 1-#10 GROUND. PROVIDE LOW-VOLTAGE TRANSFORMER TO SERVE ELECTRIFIED LOCK. PROVIDE 1P, 20AT BREAKER AT PANEL.
6. PROVIDE CONDUIT AND WIRING THROUGH ELECTRIFIED TRANSFER HINGE.
7. ¾"C. 2#12 + 1#12 GROUND TO NEAREST 120V PANELBOARD. PROVIDE 15A, 1 POLE CIRCUIT BREAKER WITH AIC RATING TO MATCH EXISTING.

BROADWAY

TEMPLE STREET

SPRING STREET

(N) 32" THICK CONCRETE SHEAR WALL

36" X 36" OPENING (BELOW BEAM).

STAIR #5

TO L1-CP 5

LIGHT COURT

PROVIDE NEW ROOF OVER RIGID INSULATION AND NEW METAL DECK.

GLASS VAULT LIGHTS TO REMAIN BELOW NEW ROOF.

STAIRWAY A

UP

OPEN SHAFT

NEW RAMP

DN

DRIVEWAY RAMP

DOWN

12'-8" WIDE x 11'-6" HT. OPENING IN SHEAR WALL

TOP OF (N) CONCRETE LINK BEAM, TYP.

PROVIDE NEW CURB AND SHEET METAL COVER AT OPENINGS FOR FUTURE FANS, TYP.

NEW DRAIN & OVERFLOW, TYP.

PROVIDE (N) WINDOW TO MATCH (E)

PROVIDE (N) SILL TO MATCH (E) OR RE-USE (E) DEMOLISHED AND SALVAGED SILL

STRONG BACKS, TYPICAL AT LIGHTCOURT WALLS, SEE 6/HA6.05 & 1/S4.11

(E) CONC. ENCASED STEEL BEAMS, TYPICAL

GLASS VAULT LIGHTS TO REMAIN BELOW NEW ROOF

(N) DRAIN

HISTORIC MATERIAL STORAGE AREA (DO NOT DISTURB).

PROVIDE NEW CURB AND SHEET METAL COVER AT OPENINGS FOR FUTURE FANS, TYPICAL

FIBER WRAP OVER (E) URM @ HIST. STAIR, TYP.

VEST. 108

STAIRWAY B

(N) STAIR PRESSURIZATION DUCT, ABOVE

(N) STAIR PRESSURIZATION REGISTER BELOW UPPER STAIR LANDING

NEW DOORS; SEE HISTORIC DRWGS HA3.01–HA3.04 & HA7.10

STAIR #1

CORRIDOR

FILL IN HOLE AT -2'-0" ELEVATION RESULTING FROM DEMOLISHED STAIR

(N) 2HR WALL WHICH SEPARATES BASEMENT TO 1ST FLOOR EXIT STAIR FROM 1ST TO 6TH FLOOR HISTORIC STAIRS

TO L1-J6 5

REPOSITION (E) BRONZE DOORS; SEE HISTORIC DRWGS HA3.01–HA3.04 & HA7.10

LOGGIA

(N) 18" THICK CONCRETE SHEAR WALL

BUILDING LINE

NADEL Architects Inc.

1990 So. Bundy Dr.
Fourth Floor
Los Angeles, CA 90025

T. 310.826.2100
F. 310.826.0182

www.nadelarc.com

CONSULTANT

TMAD TAYLOR & GAINES
• STRUCTURAL • MECHANICAL • ELECTRICAL • CIVIL

100 South Anaheim Boulevard, Suite 150
Anaheim, California 92805
Phone: 714.490.5555
Fax: 714.490.5560
Project No. 2306-154-00

REGISTERED PROFESSIONAL ENGINEER — REX K. SANDVIK — No. E16622 Exp. 06/30/08 — ELECTRICAL — STATE OF CALIFORNIA

COUNTY OF LOS ANGELES

THE HALL OF JUSTICE

STRUCTURAL RETROFIT PHASE

REVISIONS

1	
2	
3	
4	
5	
6	

DRAWING TITLE

FIRST FLOOR PLAN

SCOPING DOCUMENTS — 100% SUBMISSION — AUGUST 2010

SCALE : 1/8"=1'-0"
DATE :
JOB NO : 2306-154-00
SHEET NO.

E2.01

FIRST FLOOR PLAN — SCALE: 1/8"=1'-0" — 1

T:\2CAD\2306\2306-154-00\CONSTRUCTION\MPE\E2.01.dwg Jul 08, 2008 - 11:52am

ALL DRAWINGS AND WRITTEN MATERIAL APPEARING HEREIN CONSTITUTE THE ORIGINAL AND UNPUBLISHED WORK OF THE ARCHITECT AND THE SAME MAY NOT BE DUPLICATED, USED OR DISCLOSED WITHOUT THE WRITTEN CONSENT OF THE ARCHITECT. COPYRIGHT: NADEL ARCHITECTS INC. ALL RIGHTS RESERVED.

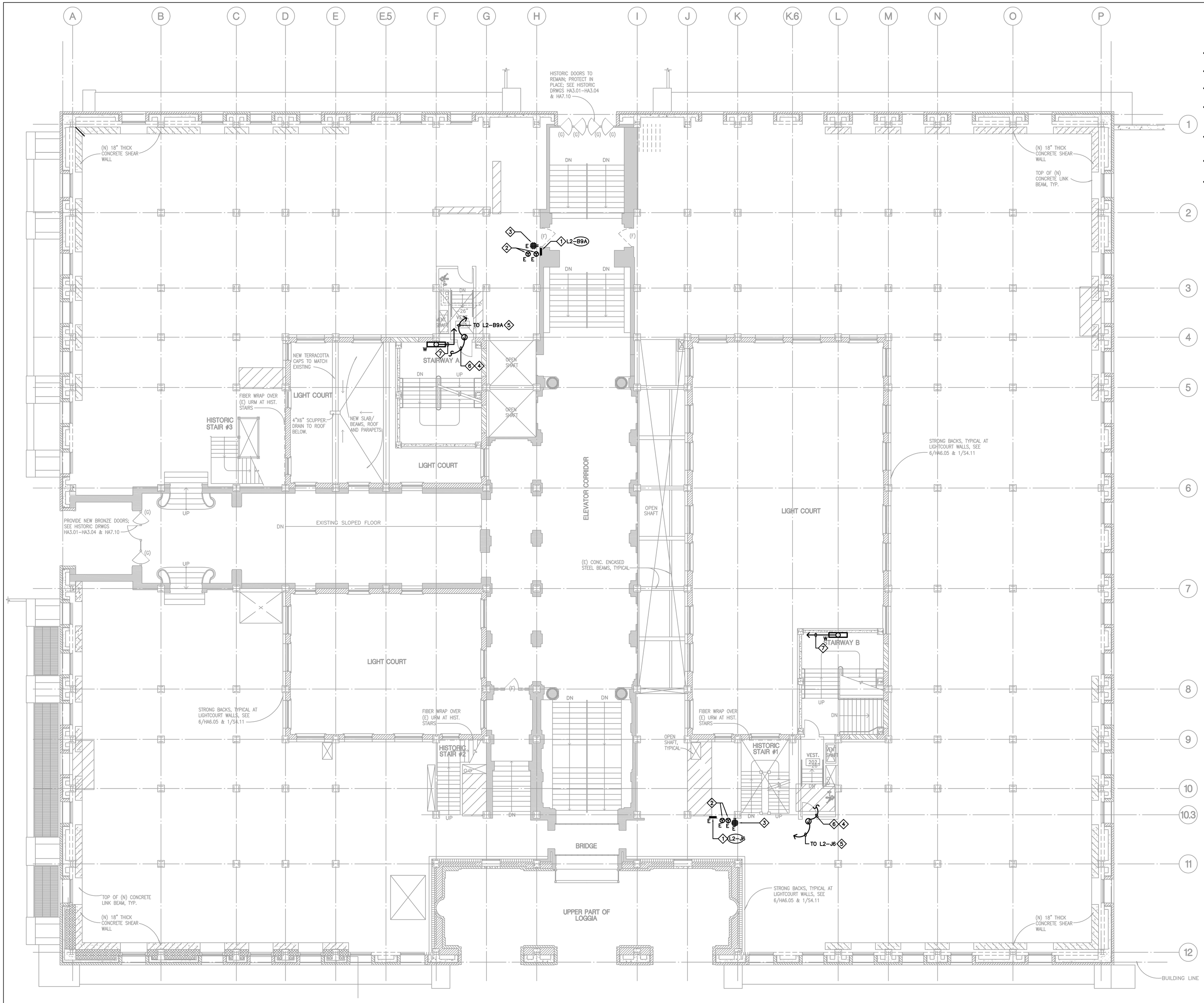

SHEET NOTES

1. EXISTING 120/240V, 1ø, PNL. TO BE UTILIZED FOR TEMPORARY POWER.
2. EXISTING WELDING RECEPTACLE FOR TEMPORARY POWER DURING CONSTRUCTION.
3. EXISTING 20A, 120V. DUPLEX RECEPTACLE FOR TEMPORARY POWER DURING CONSTRUCTION.
4. PROVIDE 120V POWER TO ELECTRIFIED LOCK. CONTRACTOR SHALL COORDINATE THE REQUIREMENT OF ELECTRIFIED LOCK WITH OWNER PRIOR TO THE START OF ROUGH–IN WORK.
5. PROVIDE 2–#10, 1–#10 GROUND. PROVIDE LOW–VOLTAGE TRANSFORMER TO SERVE ELECTRIFIED LOCK. PROVIDE 1P, 20AT BREAKER AT PANEL.
6. PROVIDE CONDUIT AND WIRING THROUGH ELECTRIFIED TRANSFER HINGE.
7. ¾"C. 2#12 + 1#12 GROUND TO NEAREST 120V PANELBOARD. PROVIDE 15A, 1 POLE CIRCUIT BREAKER WITH AIC RATING TO MATCH EXISTING.

SECOND FLOOR PLAN | SCALE: 1/8"=1'–0" | 1

NADEL Architects Inc.

1990 So. Bundy Dr.
Fourth Floor
Los Angeles, CA 90025

T. 310.826.2100
F. 310.826.0182

www.nadelarc.com

CONSULTANT
TMAD TAYLOR & GAINES
• STRUCTURAL • MECHANICAL • ELECTRICAL • CIVIL
100 South Anaheim Boulevard, Suite 150
Anaheim, California 92805
Phone: 714.490.5555
Fax: 714.490.5560
Project No. 2306-154-00

REGISTERED PROFESSIONAL ENGINEER
REY R. SANGUEZA
No. E16622
Exp. 06/30/08
ELECTRICAL
STATE OF CALIFORNIA

COUNTY OF LOS ANGELES
THE HALL OF JUSTICE
STRUCTURAL RETROFIT PHASE

REVISIONS

DRAWING TITLE

SECOND FLOOR PLAN

SCOPING DOCUMENTS 100% SUBMISSION AUGUST 2010

SCALE : 1/8"=1'-0"
DATE :
JOB NO : 2306-154-00
SHEET NO.
E2.02

T:\23CAD\2306\2306-154-00\CONSTRUCTION\MPE\E2.02.dwg Jul 08, 2008 – 11:52am

ALL DRAWINGS AND WRITTEN MATERIAL APPEARING HEREIN CONSTITUTE THE ORIGINAL AND UNPUBLISHED WORK OF THE ARCHITECT AND THE SAME MAY NOT BE DUPLICATED, USED OR DISCLOSED WITHOUT THE WRITTEN CONSENT OF THE ARCHITECT. COPYRIGHT: NADEL ARCHITECTS INC. ALL RIGHTS RESERVED.

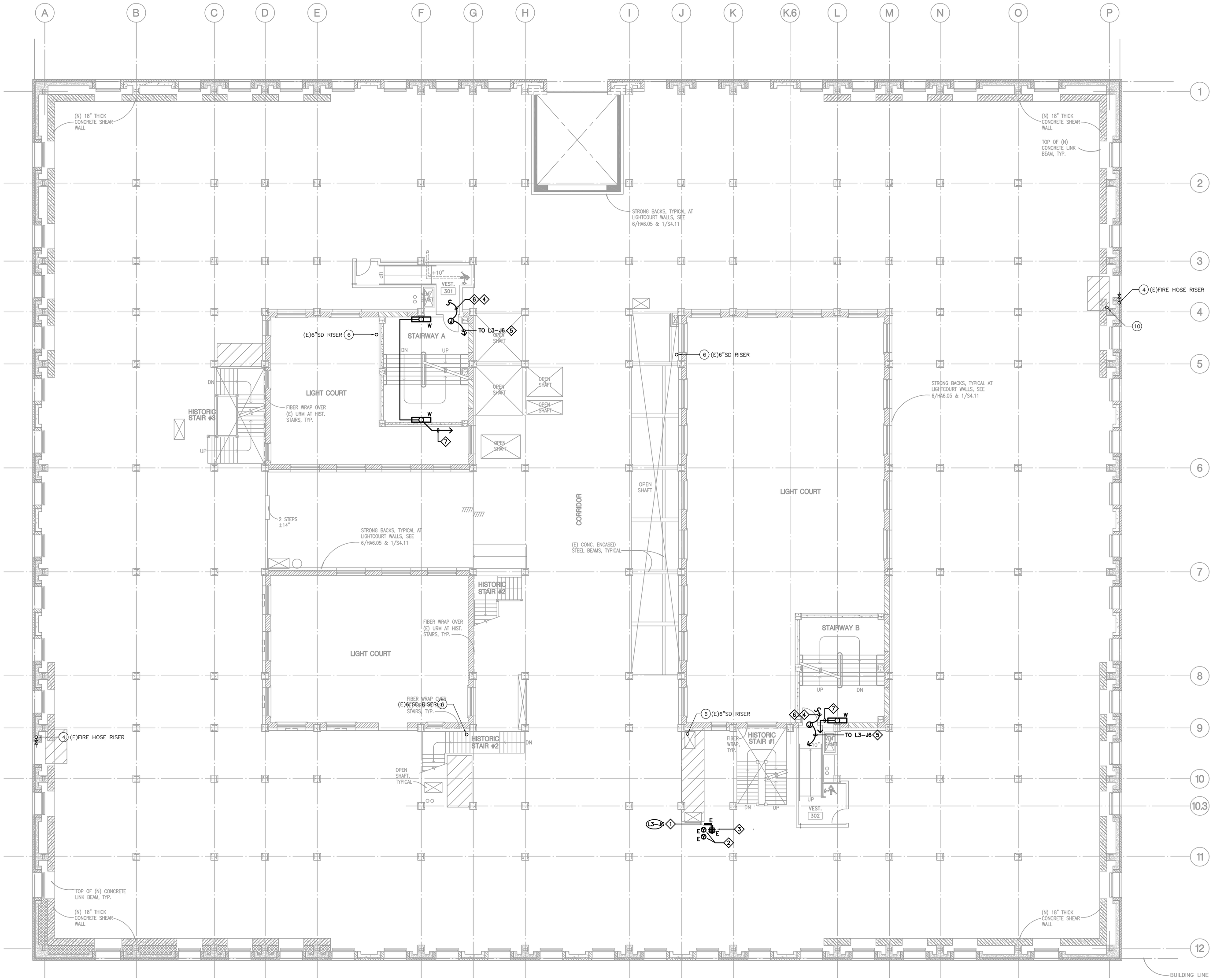

SHEET NOTES

1. EXISTING 120/240V, 1ø, PNL. TO BE UTILIZED FOR TEMPORARY POWER.
2. EXISTING WELDING RECEPTACLE FOR TEMPORARY POWER DURING CONSTRUCTION.
3. EXISTING 20A, 120V. DUPLEX RECEPTACLE FOR TEMPORARY POWER DURING CONSTRUCTION.
4. PROVIDE 120V POWER TO ELECTRIFIED LOCK. CONTRACTOR SHALL COORDINATE THE REQUIREMENT OF ELECTRIFIED LOCK WITH OWNER PRIOR TO THE START OF ROUGH-IN WORK.
5. PROVIDE 2-#10, 1-#10 GROUND. PROVIDE LOW-VOLTAGE TRANSFORMER TO SERVE ELECTRIFIED LOCK. PROVIDE 1P, 20AT BREAKER AT PANEL.
6. PROVIDE CONDUIT AND WIRING THROUGH ELECTRIFIED TRANSFER HINGE.
7. ¾"C. 2#12 + 1#12 GROUND TO NEAREST 120V PANELBOARD. PROVIDE 15A, 1 POLE CIRCUIT BREAKER WITH AIC RATING TO MATCH EXISTING.

THIRD FLOOR PLAN | SCALE: 1/8"=1'-0" | 1

NADEL Architects Inc.

1990 So. Bundy Dr.
Fourth Floor
Los Angeles, CA 90025

T. 310.826.2100
F. 310.826.0182

www.nadelarc.com

CONSULTANT
TMAD TAYLOR & GAINES
• STRUCTURAL • MECHANICAL • ELECTRICAL • CIVIL
100 South Anaheim Boulevard, Suite 150
Anaheim, California 92805
Phone: 714.490.5555
Fax: 714.490.5560
Project No. 2306-154-00

REGISTERED PROFESSIONAL ENGINEER
REY R. SANGUEZA
No. E16622
Exp. 06/30/08
ELECTRICAL
STATE OF CALIFORNIA

COUNTY OF LOS ANGELES
THE HALL OF JUSTICE
STRUCTURAL RETROFIT PHASE

REVISIONS

DRAWING TITLE

THIRD FLOOR PLAN

SCOPING DOCUMENTS 100% SUBMISSION AUGUST 2010

SCALE : 1/8"=1'-0"
DATE :
JOB NO : 2306-154-00
SHEET NO.
E2.03

T:\23CAD\2306\2306-154-00\CONSTRUCTION\MPE\E2.03.dwg Jul 08, 2008 - 11:52am

ALL DRAWINGS AND WRITTEN MATERIAL APPEARING HEREIN CONSTITUTE THE ORIGINAL AND UNPUBLISHED WORK OF THE ARCHITECT AND THE SAME MAY NOT BE DUPLICATED, USED OR DISCLOSED WITHOUT THE WRITTEN CONSENT OF THE ARCHITECT. COPYRIGHT: NADEL ARCHITECTS INC. ALL RIGHTS RESERVED.

SHEET NOTES

1. EXISTING 120/240V, 1Ø, PNL. TO BE UTILIZED FOR TEMPORARY POWER.
2. EXISTING WELDING RECEPTACLE FOR TEMPORARY POWER DURING CONSTRUCTION.
3. EXISTING 20A, 120V. DUPLEX RECEPTACLE FOR TEMPORARY POWER DURING CONSTRUCTION.
4. PROVIDE 120V POWER TO ELECTRIFIED LOCK. CONTRACTOR SHALL COORDINATE THE REQUIREMENT OF ELECTRIFIED LOCK WITH OWNER PRIOR TO THE START OF ROUGH-IN WORK.
5. PROVIDE 2-#10, 1-#10 GROUND. PROVIDE LOW-VOLTAGE TRANSFORMER TO SERVE ELECTRIFIED LOCK. PROVIDE 1P, 20AT BREAKER AT PANEL.
6. PROVIDE CONDUIT AND WIRING THROUGH ELECTRIFIED TRANSFER HINGE.
7. ¾"C. 2#12 + 1#12 GROUND TO NEAREST 120V PANELBOARD. PROVIDE 15A, 1 POLE CIRCUIT BREAKER WITH AIC RATING TO MATCH EXISTING.

A B C D E F G H I J K K.6 L M N O P

1 2 3 4 5 6 7 8 9 10 10.3 11 12

(N) 18" THICK CONCRETE SHEAR WALL

TOP OF (N) CONCRETE LINK BEAM, TYP.

VEST. 40T

DN

CLG

SHAFT

STAIRWAY A

UP

OPEN SHAFT

TO 4LW

4LW

LIGHT COURT

HISTORIC STAIR #3

STRONG BACKS, TYPICAL AT LIGHTCOURT WALLS, SEE 6/HA6.05 & 1/S4.11

(N) STUD & ANCHOR WALL SUPPORT SYSTEM, TYP.

ROOF

(N) ROOFING OVER RIGID INSULATION.

CORRIDOR

(E) CONC. ENCASED STEEL BEAMS, TYPICAL

UP 22 RISERS

DN 25 RISERS

HISTORIC STAIR #2

FIBER WRAP OVER (E) URM AT HIST. STAIRS, TYPICAL

OPEN SHAFT, TYPICAL

L4-J10

STAIRWAY B

HISTORIC STAIR #1

FIBER-WRAP

(N) BEAM

(N) IN-FILL SLAB

TO L4-J10

(N) 18" THICK CONCRETE SHEAR WALL

BUILDING LINE

3 A6.01

FOURTH FLOOR PLAN | SCALE: 1/8"=1'-0" | 1

NADEL Architects Inc.

1990 So. Bundy Dr.
Fourth Floor
Los Angeles, CA 90025

T. 310.826.2100
F. 310.826.0182

www.nadelarc.com

CONSULTANT

TMAD TAYLOR &GAINES
• STRUCTURAL
• MECHANICAL
• ELECTRICAL
• CIVIL

100 South Anaheim Boulevard, Suite 150
Anaheim, California 92805
Phone: 714.490.5555
Fax: 714.490.5560
Project No. 2306-154-00

REGISTERED PROFESSIONAL ENGINEER — REX K. SANDVETZ — No. E16622 Exp. 06/30/08 — ELECTRICAL — STATE OF CALIFORNIA

COUNTY OF LOS ANGELES

THE HALL OF JUSTICE

STRUCTURAL RETROFIT PHASE

REVISIONS

1	
2	
3	
4	
5	
6	

DRAWING TITLE

FOURTH FLOOR PLAN

SCOPING DOCUMENTS 100% SUBMISSION AUGUST 2010

SCALE : 1/8"=1'-0"
DATE :
JOB NO : 2306-154-00
SHEET NO.

E2.04

T:\23CAD\2306\2306-154-00\CONSTRUCTION\MPE\E2.04.dwg Jul 08, 2008 - 11:52am

ALL DRAWINGS AND WRITTEN MATERIAL APPEARING HEREIN CONSTITUTE THE ORIGINAL AND UNPUBLISHED WORK OF THE ARCHITECT AND THE SAME MAY NOT BE DUPLICATED, USED OR DISCLOSED WITHOUT THE WRITTEN CONSENT OF THE ARCHITECT. COPYRIGHT: NADEL ARCHITECTS INC. ALL RIGHTS RESERVED.

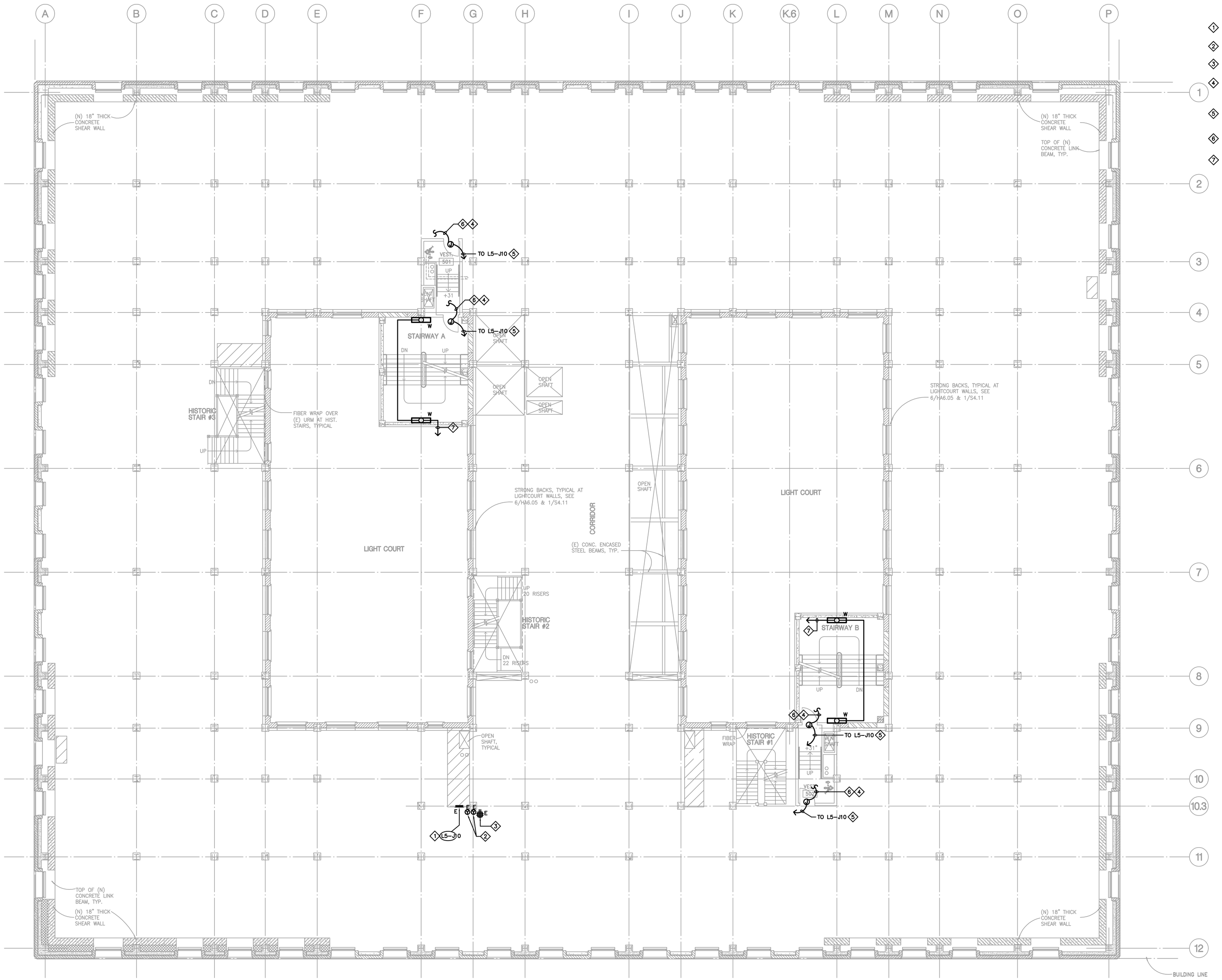

SHEET NOTES

1. EXISTING 120/240V, 1ø, PNL. TO BE UTILIZED FOR TEMPORARY POWER.
2. EXISTING WELDING RECEPTACLE FOR TEMPORARY POWER DURING CONSTRUCTION.
3. EXISTING 20A, 120V. DUPLEX RECEPTACLE FOR TEMPORARY POWER DURING CONSTRUCTION.
4. PROVIDE 120V POWER TO ELECTRIFIED LOCK. CONTRACTOR SHALL COORDINATE THE REQUIREMENT OF ELECTRIFIED LOCK WITH OWNER PRIOR TO THE START OF ROUGH-IN WORK.
5. PROVIDE 2-#10, 1-#10 GROUND. PROVIDE LOW-VOLTAGE TRANSFORMER TO SERVE ELECTRIFIED LOCK. PROVIDE 1P, 20AT BREAKER AT PANEL.
6. PROVIDE CONDUIT AND WIRING THROUGH ELECTRIFIED TRANSFER HINGE.
7. ¾"C. 2#12 + 1#12 GROUND TO NEAREST 120V PANELBOARD. PROVIDE 15A, 1 POLE CIRCUIT BREAKER WITH AIC RATING TO MATCH EXISTING.

NADEL Architects Inc.

1990 So. Bundy Dr.
Fourth Floor
Los Angeles, CA 90025

T. 310.826.2100
F. 310.826.0182

www.nadelarc.com

CONSULTANT

TMAD TAYLOR & GAINES
• STRUCTURAL • MECHANICAL • ELECTRICAL • CIVIL

100 South Anaheim Boulevard, Suite 150
Anaheim, California 92805
Phone: 714.490.5555
Fax: 714.490.5560
Project No. 2306-154-00

REGISTERED PROFESSIONAL ENGINEER
REY R. SANGUEZA
No. E16622
Exp. 06/30/08
ELECTRICAL
STATE OF CALIFORNIA

COUNTY OF LOS ANGELES

THE HALL OF JUSTICE

STRUCTURAL RETROFIT PHASE

REVISIONS

DRAWING TITLE

FIFTH FLOOR PLAN

SCOPING DOCUMENTS 100% SUBMISSION AUGUST 2010

SCALE : 1/8"=1'-0"
DATE :
JOB NO : 2306-154-00
SHEET NO.

E2.05

FIFTH FLOOR PLAN | SCALE: 1/8"=1'-0" | 1

T:\23CAD\2306\2306-154-00\CONSTRUCTION\MPE\E2.05.dwg Jul 08, 2008 - 11:52am

ALL DRAWINGS AND WRITTEN MATERIAL APPEARING HEREIN CONSTITUTE THE ORIGINAL AND UNPUBLISHED WORK OF THE ARCHITECT AND THE SAME MAY NOT BE DUPLICATED, USED OR DISCLOSED WITHOUT THE WRITTEN CONSENT OF THE ARCHITECT. COPYRIGHT: NADEL ARCHITECTS INC. ALL RIGHTS RESERVED.

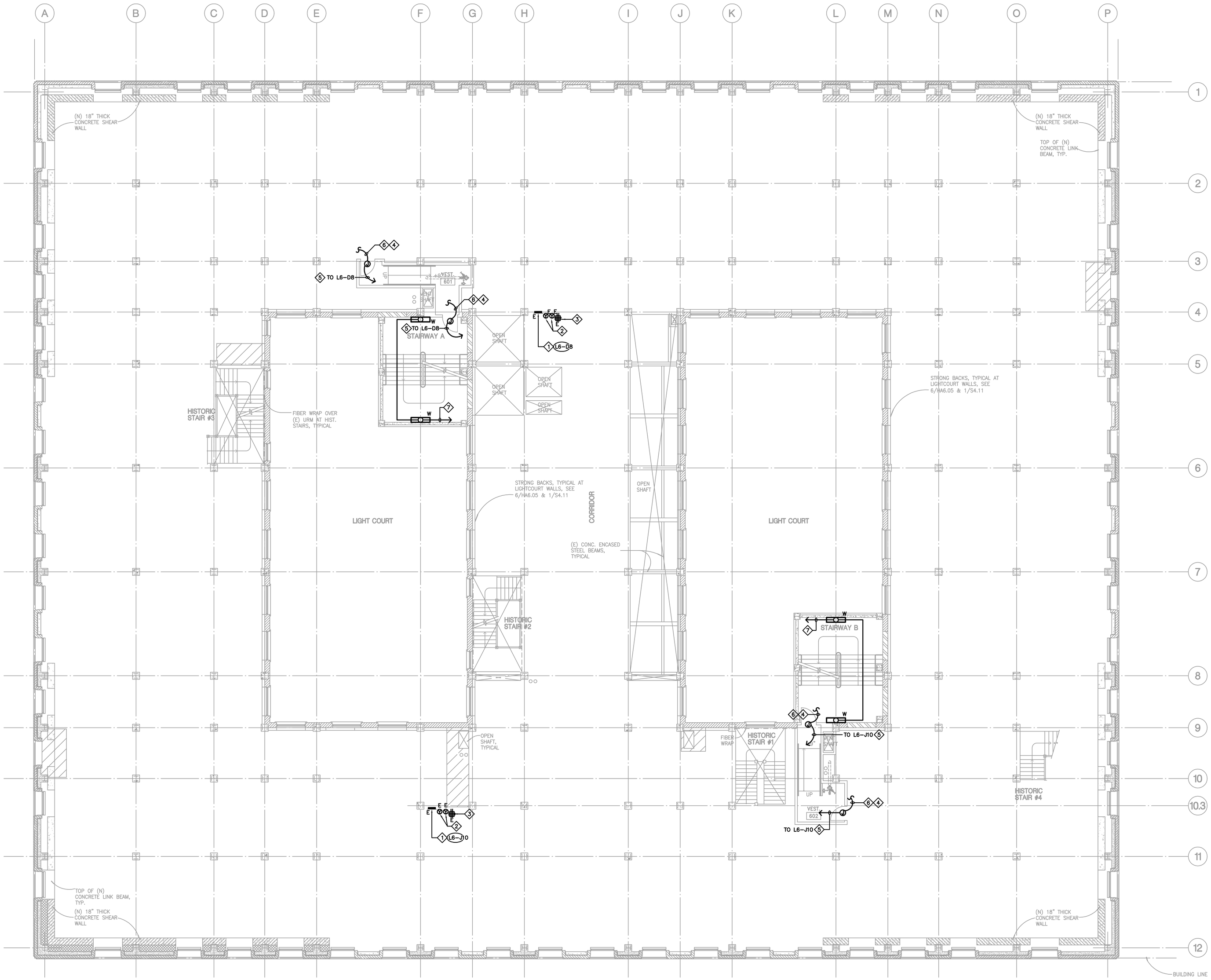

SHEET NOTES

1. EXISTING 120/240V, 1ø, PNL. TO BE UTILIZED FOR TEMPORARY POWER.
2. EXISTING WELDING RECEPTACLE FOR TEMPORARY POWER DURING CONSTRUCTION.
3. EXISTING 20A, 120V. DUPLEX RECEPTACLE FOR TEMPORARY POWER DURING CONSTRUCTION.
4. PROVIDE 120V POWER TO ELECTRIFIED LOCK. CONTRACTOR SHALL COORDINATE THE REQUIREMENT OF ELECTRIFIED LOCK WITH OWNER PRIOR TO THE START OF ROUGH-IN WORK.
5. PROVIDE 2-#10, 1-#10 GROUND. PROVIDE LOW-VOLTAGE TRANSFORMER TO SERVE ELECTRIFIED LOCK. PROVIDE 1P, 20AT BREAKER AT PANEL.
6. PROVIDE CONDUIT AND WIRING THROUGH ELECTRIFIED TRANSFER HINGE.
7. ¾"C. 2#12 + 1#12 GROUND TO NEAREST 120V PANELBOARD. PROVIDE 15A, 1 POLE CIRCUIT BREAKER WITH AIC RATING TO MATCH EXISTING.

NADEL Architects Inc.

1990 So. Bundy Dr.
Fourth Floor
Los Angeles, CA 90025

T. 310.826.2100
F. 310.826.0182

www.nadelarc.com

CONSULTANT

TMAD TAYLOR & GAINES
• STRUCTURAL • MECHANICAL • ELECTRICAL • CIVIL

100 South Anaheim Boulevard, Suite 150
Anaheim, California 92805
Phone: 714.490.5555
Fax: 714.490.5560
Project No. 2306-154-00

REGISTERED PROFESSIONAL ENGINEER
RET R. SANGUEZA
No. E16622
Exp. 06/30/08
ELECTRICAL
STATE OF CALIFORNIA

COUNTY OF LOS ANGELES

THE HALL OF JUSTICE

STRUCTURAL RETROFIT PHASE

REVISIONS

DRAWING TITLE

SIXTH FLOOR PLAN

SCOPING DOCUMENTS 100% SUBMISSION AUGUST 2010

SCALE : 1/8"=1'-0"
DATE :
JOB NO : 2306-154-00
SHEET NO.
E2.06

SIXTH FLOOR PLAN | SCALE: 1/8"=1'-0" | 1

T:\23CAD\2306\2306-154-00\CONSTRUCTION\MPE\E2.06.dwg Jul 08, 2008 - 11:52am

ALL DRAWINGS AND WRITTEN MATERIAL APPEARING HEREIN CONSTITUTE THE ORIGINAL AND UNPUBLISHED WORK OF THE ARCHITECT AND THE SAME MAY NOT BE DUPLICATED, USED OR DISCLOSED WITHOUT THE WRITTEN CONSENT OF THE ARCHITECT. COPYRIGHT: NADEL ARCHITECTS INC. ALL RIGHTS RESERVED.

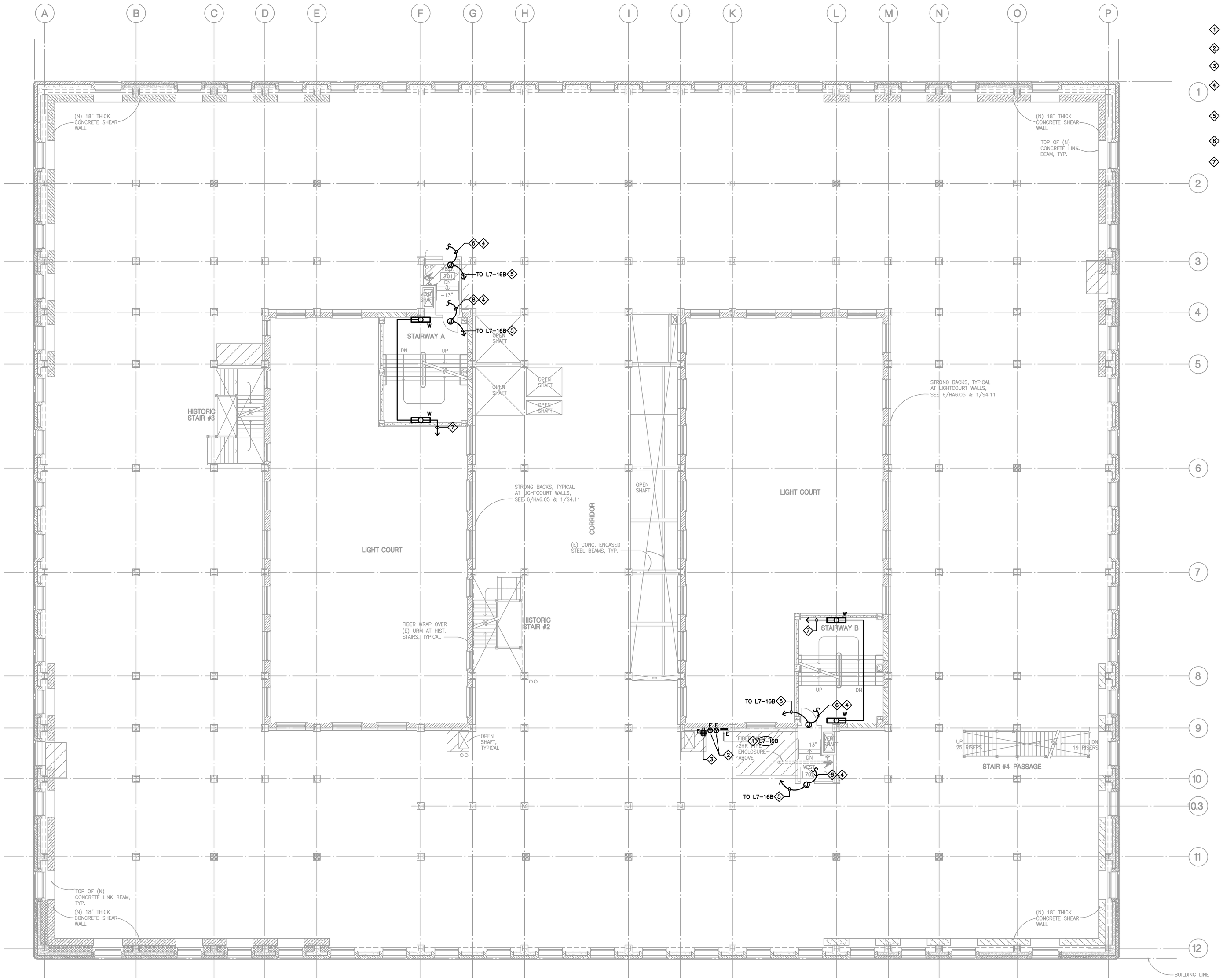

SHEET NOTES

1. EXISTING 120/240V, 1ϕ, PNL. TO BE UTILIZED FOR TEMPORARY POWER.
2. EXISTING WELDING RECEPTACLE FOR TEMPORARY POWER DURING CONSTRUCTION.
3. EXISTING 20A, 120V. DUPLEX RECEPTACLE FOR TEMPORARY POWER DURING CONSTRUCTION.
4. PROVIDE 120V POWER TO ELECTRIFIED LOCK. CONTRACTOR SHALL COORDINATE THE REQUIREMENT OF ELECTRIFIED LOCK WITH OWNER PRIOR TO THE START OF ROUGH-IN WORK.
5. PROVIDE 2–#10, 1–#10 GROUND. PROVIDE LOW-VOLTAGE TRANSFORMER TO SERVE ELECTRIFIED LOCK. PROVIDE 1P, 20AT BREAKER AT PANEL.
6. PROVIDE CONDUIT AND WIRING THROUGH ELECTRIFIED TRANSFER HINGE.
7. ¾"C. 2#12 + 1#12 GROUND TO NEAREST 120V PANELBOARD. PROVIDE 15A, 1 POLE CIRCUIT BREAKER WITH AIC RATING TO MATCH EXISTING.

SEVENTH FLOOR PLAN — SCALE: 1/8"=1'-0" — 1

NADEL Architects Inc.

1990 So. Bundy Dr.
Fourth Floor
Los Angeles, CA 90025

T. 310.826.2100
F. 310.826.0182

www.nadelarc.com

CONSULTANT

TMAD TAYLOR &GAINES
• STRUCTURAL
• MECHANICAL
• ELECTRICAL
• CIVIL

100 South Anaheim Boulevard, Suite 150
Anaheim, California 92805
Phone: 714.490.5555
Fax: 714.490.5560
Project No. 2306-154-00

REGISTERED PROFESSIONAL ENGINEER — JEFF K. SANDVETZ — No. E16622 Exp. 06/30/08 — ELECTRICAL — STATE OF CALIFORNIA

COUNTY OF LOS ANGELES

THE HALL OF JUSTICE

STRUCTURAL RETROFIT PHASE

REVISIONS

1	
2	
3	
4	
5	
6	

DRAWING TITLE

SEVENTH FLOOR PLAN

SCALE : 1/8"=1'-0"
DATE :
JOB NO : 2306-154-00
SHEET NO.

E2.07

SCOPING DOCUMENTS — 100% SUBMISSION — AUGUST 2010

T:\2JCAD\2306\2306-154-00\CONSTRUCTION\MPE\E2.07.dwg Jul 08, 2008 - 11:51am

ALL DRAWINGS AND WRITTEN MATERIAL APPEARING HEREIN CONSTITUTE THE ORIGINAL AND UNPUBLISHED WORK OF THE ARCHITECT AND THE SAME MAY NOT BE DUPLICATED, USED OR DISCLOSED WITHOUT THE WRITTEN CONSENT OF THE ARCHITECT. COPYRIGHT: NADEL ARCHITECTS INC. ALL RIGHTS RESERVED.

SHEET NOTES

1. EXISTING 120/240V, 1ø, PNL. TO BE UTILIZED FOR TEMPORARY POWER.
2. EXISTING WELDING RECEPTACLE FOR TEMPORARY POWER DURING CONSTRUCTION.
3. EXISTING 20A, 120V. DUPLEX RECEPTACLE FOR TEMPORARY POWER DURING CONSTRUCTION.
4. PROVIDE 120V POWER TO ELECTRIFIED LOCK. CONTRACTOR SHALL COORDINATE THE REQUIREMENT OF ELECTRIFIED LOCK WITH OWNER PRIOR TO THE START OF ROUGH-IN WORK.
5. PROVIDE 2-#10, 1-#10 GROUND. PROVIDE LOW-VOLTAGE TRANSFORMER TO SERVE ELECTRIFIED LOCK. PROVIDE 1P, 20AT BREAKER AT PANEL.
6. PROVIDE CONDUIT AND WIRING THROUGH ELECTRIFIED TRANSFER HINGE.
7. ¾"C. 2#12 + 1#12 GROUND TO NEAREST 120V PANELBOARD. PROVIDE 15A, 1 POLE CIRCUIT BREAKER WITH AIC RATING TO MATCH EXISTING.

(N) 18" THICK CONCRETE SHEAR WALL

TOP OF (N) CONCRETE LINK BEAM, TYP.

TO L8-16B

STAIRWAY A

STAIRWAY B

OPEN SHAFT

FIBER WRAP OVER (E) URM AT HIST. STAIRS, TYPICAL

HISTORIC STAIR #3

HISTORIC STAIR #2

STRONG BACKS, TYPICAL AT LIGHTCOURT WALLS, SEE 6/HA6.05 & 1/S4.11

CORRIDOR

LIGHT COURT

JURY ROOM

EXISTING WOOD PANELING & HCT PARTITIONS TO REMAIN

NOTE: THIS ROOM SHALL BE SEALED OFF DURING DEMOLITION TO PROTECT IT FROM DAMAGE; NO WORK TO OCCUR EXCEPT FOR BOARDING UP OF WINDOWS AS REQUIRED.

(E) CONC. ENCASED STEEL BEAMS, TYP.

OPEN SHAFT, TYPICAL

HOLLOW CLAY TILE WALL FURRING AND PARTITIONS TO REMAIN, WOOD PANELING, DOORS, MOLDINGS AND STONE BASE TO REMAIN.

COURT ROOM

NOTE: THIS ROOM SHALL BE SEALED OFF DURING DEMOLITION TO PROTECT IT FROM DAMAGE. NO WORK TO OCCUR EXCEPT TO PROTECT EXISTING HISTORIC WOOD PANELING, STONE BASE, PLASTER WALLS AND THE BOARDING UP WINDOWS PRIOR TO THE REMOVAL OF EXISTING SUSPENDED AC TILE CEILING.

STAIR #4 SAGE

BUILDING LINE

EIGHTH FLOOR PLAN — SCALE: 1/8"=1'-0" — 1

NADEL Architects Inc.

1990 So. Bundy Dr.
Fourth Floor
Los Angeles, CA 90025

T. 310.826.2100
F. 310.826.0182

www.nadelarc.com

CONSULTANT

TMAD TAYLOR & GAINES — STRUCTURAL, MECHANICAL, ELECTRICAL, CIVIL

100 South Anaheim Boulevard, Suite 150
Anaheim, California 92805
Phone: 714.490.5555
Fax: 714.490.5560
Project No. 2306-154-00

REGISTERED PROFESSIONAL ENGINEER — PETER K. SANDVETZ — No. E16622 Exp. 06/30/08 — ELECTRICAL — STATE OF CALIFORNIA

COUNTY OF LOS ANGELES

THE HALL OF JUSTICE

STRUCTURAL RETROFIT PHASE

REVISIONS

1	
2	
3	
4	
5	
6	

DRAWING TITLE

EIGHTH FLOOR PLAN

SCALE : 1/8"=1'-0"
DATE :
JOB NO : 2306-154-00
SHEET NO.

E2.08

SCOPING DOCUMENTS — 100% SUBMISSION — AUGUST 2010

T:\2JCAD\2306\2306-154-00\CONSTRUCTION\MPE\E2.08.dwg Jul 08, 2008 - 11:51am

ALL DRAWINGS AND WRITTEN MATERIAL APPEARING HEREIN CONSTITUTE THE ORIGINAL AND UNPUBLISHED WORK OF THE ARCHITECT AND THE SAME MAY NOT BE DUPLICATED, USED OR DISCLOSED WITHOUT THE WRITTEN CONSENT OF THE ARCHITECT. COPYRIGHT: NADEL ARCHITECTS INC. ALL RIGHTS RESERVED.

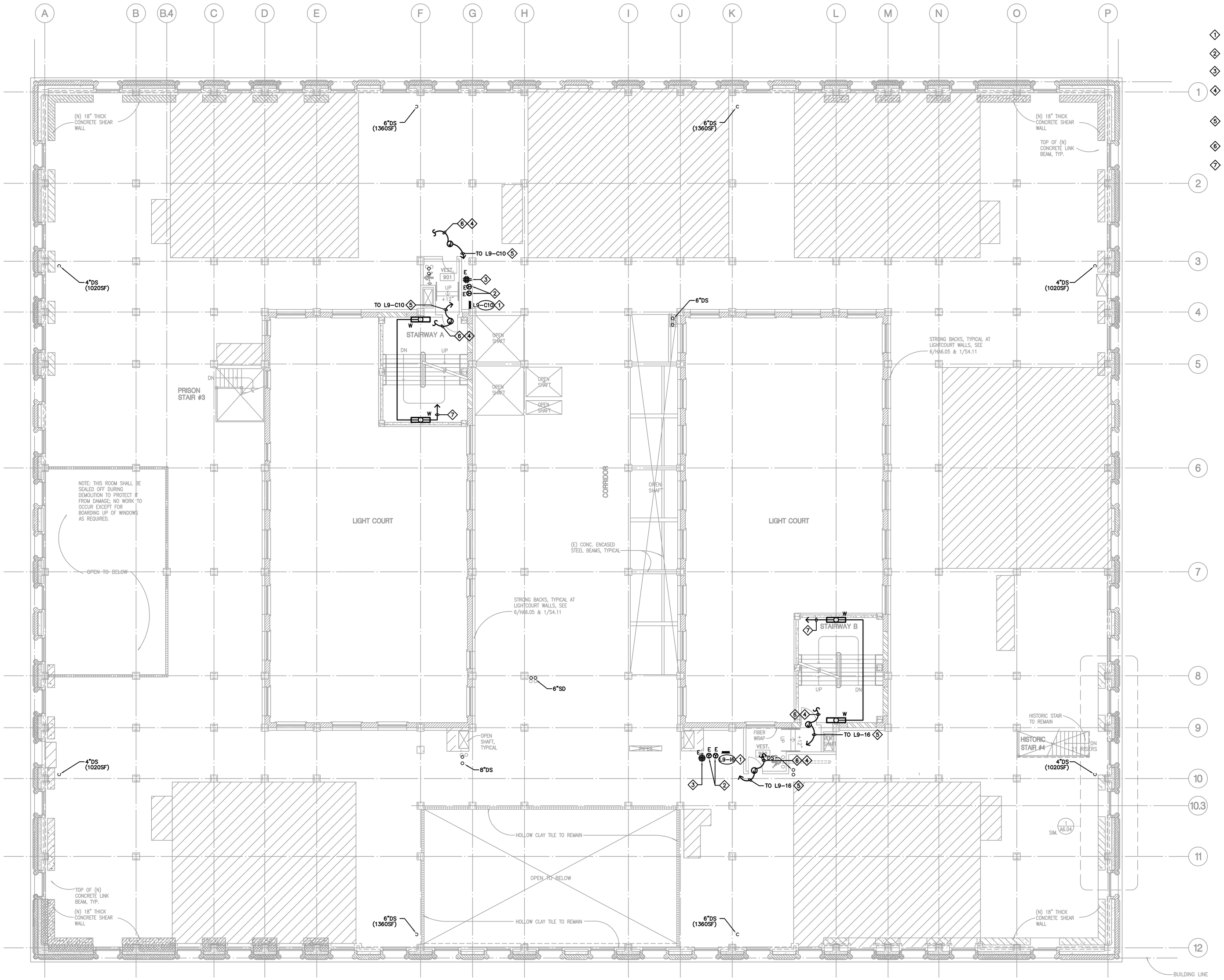

SHEET NOTES

1. EXISTING 120/240V, 1ø, PNL. TO BE UTILIZED FOR TEMPORARY POWER.
2. EXISTING WELDING RECEPTACLE FOR TEMPORARY POWER DURING CONSTRUCTION.
3. EXISTING 20A, 120V. DUPLEX RECEPTACLE FOR TEMPORARY POWER DURING CONSTRUCTION.
4. PROVIDE 120V POWER TO ELECTRIFIED LOCK. CONTRACTOR SHALL COORDINATE THE REQUIREMENT OF ELECTRIFIED LOCK WITH OWNER PRIOR TO THE START OF ROUGH-IN WORK.
5. PROVIDE 2-#10, 1-#10 GROUND. PROVIDE LOW-VOLTAGE TRANSFORMER TO SERVE ELECTRIFIED LOCK. PROVIDE 1P, 20AT BREAKER AT PANEL.
6. PROVIDE CONDUIT AND WIRING THROUGH ELECTRIFIED TRANSFER HINGE.
7. ¾"C. 2#12 + 1#12 GROUND TO NEAREST 120V PANELBOARD. PROVIDE 15A, 1 POLE CIRCUIT BREAKER WITH AIC RATING TO MATCH EXISTING.

NADEL Architects Inc.

1990 So. Bundy Dr.
Fourth Floor
Los Angeles, CA 90025

T. 310.826.2100
F. 310.826.0182

www.nadelarc.com

CONSULTANT

TMAD TAYLOR & GAINES
• STRUCTURAL • MECHANICAL • ELECTRICAL • CIVIL

100 South Anaheim Boulevard, Suite 150
Anaheim, California 92805
Phone: 714.490.5555
Fax: 714.490.5560
Project No. 2306-154-00

REGISTERED PROFESSIONAL ENGINEER
NEY R. SANGUEZA
No. E16622
Exp. 06/30/08
ELECTRICAL
STATE OF CALIFORNIA

COUNTY OF LOS ANGELES
THE HALL OF JUSTICE
STRUCTURAL RETROFIT PHASE

REVISIONS

DRAWING TITLE

NINTH FLOOR PLAN

SCOPING DOCUMENTS 100% SUBMISSION AUGUST 2010

SCALE : 1/8"=1'-0"
DATE :
JOB NO : 2306-154-00
SHEET NO.
E2.09

NINTH FLOOR PLAN | SCALE: 1/8"=1'-0" | 1

T:\23CAD\2306\2306-154-00\CONSTRUCTION\MPE\E2.09.dwg Jul 08, 2008 - 11:51am

ALL DRAWINGS AND WRITTEN MATERIAL APPEARING HEREIN CONSTITUTE THE ORIGINAL AND UNPUBLISHED WORK OF THE ARCHITECT AND THE SAME MAY NOT BE DUPLICATED, USED OR DISCLOSED WITHOUT THE WRITTEN CONSENT OF THE ARCHITECT. COPYRIGHT: NADEL ARCHITECTS INC. ALL RIGHTS RESERVED.

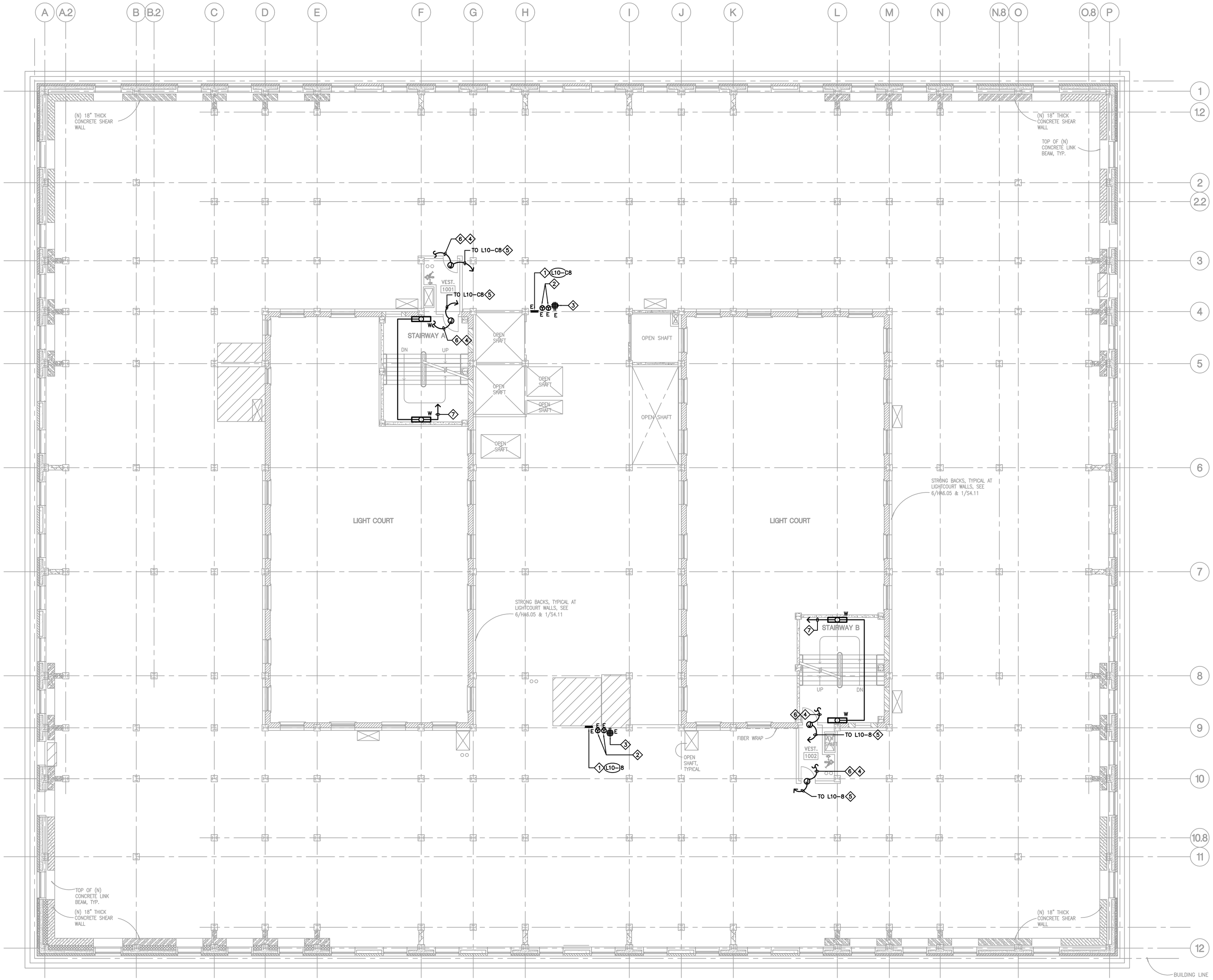

SHEET NOTES

1. EXISTING 120/240V, 1ø, PNL. TO BE UTILIZED FOR TEMPORARY POWER.
2. EXISTING WELDING RECEPTACLE FOR TEMPORARY POWER DURING CONSTRUCTION.
3. EXISTING 20A, 120V. DUPLEX RECEPTACLE FOR TEMPORARY POWER DURING CONSTRUCTION.
4. PROVIDE 120V POWER TO ELECTRIFIED LOCK. CONTRACTOR SHALL COORDINATE THE REQUIREMENT OF ELECTRIFIED LOCK WITH OWNER PRIOR TO THE START OF ROUGH-IN WORK.
5. PROVIDE 2-#10, 1-#10 GROUND. PROVIDE LOW-VOLTAGE TRANSFORMER TO SERVE ELECTRIFIED LOCK. PROVIDE 1P, 20AT BREAKER AT PANEL.
6. PROVIDE CONDUIT AND WIRING THROUGH ELECTRIFIED TRANSFER HINGE.
7. ¾"C. 2#12 + 1#12 GROUND TO NEAREST 120V PANELBOARD. PROVIDE 15A, 1 POLE CIRCUIT BREAKER WITH AIC RATING TO MATCH EXISTING.

NADEL
Architects Inc.

1990 So. Bundy Dr.
Fourth Floor
Los Angeles, CA 90025

T. 310.826.2100
F. 310.826.0182

www.nadelarc.com

CONSULTANT
TMAD TAYLOR & GAINES
• STRUCTURAL • MECHANICAL • ELECTRICAL • CIVIL
100 South Anaheim Boulevard, Suite 150
Anaheim, California 92805
Phone: 714.490.5555
Fax: 714.490.5560
Project No. 2306-154-00

REGISTERED PROFESSIONAL ENGINEER
REY R. SANGUEZA
No. E16622
Exp. 06/30/08
ELECTRICAL
STATE OF CALIFORNIA

COUNTY OF LOS ANGELES
THE HALL OF JUSTICE
STRUCTURAL RETROFIT PHASE

REVISIONS

DRAWING TITLE

TENTH FLOOR PLAN

SCOPING DOCUMENTS 100% SUBMISSION AUGUST 2010

SCALE : 1/8"=1'-0"
DATE :
JOB NO : 2306-154-00
SHEET NO.
E2.10

TENTH FLOOR PLAN | SCALE: 1/8"=1'-0" | 1

T:\23CAD\2306\2306-154-00\CONSTRUCTION\MPE\E2.10.dwg Jul 08, 2008 - 11:51am

ALL DRAWINGS AND WRITTEN MATERIAL APPEARING HEREIN CONSTITUTE THE ORIGINAL AND UNPUBLISHED WORK OF THE ARCHITECT AND THE SAME MAY NOT BE DUPLICATED, USED OR DISCLOSED WITHOUT THE WRITTEN CONSENT OF THE ARCHITECT. COPYRIGHT: NADEL ARCHITECTS INC. ALL RIGHTS RESERVED.

SHEET NOTES

1. EXISTING 120/240V, 1ø, PNL. TO BE UTILIZED FOR TEMPORARY POWER.
2. EXISTING WELDING RECEPTACLE FOR TEMPORARY POWER DURING CONSTRUCTION.
3. EXISTING 20A, 120V. DUPLEX RECEPTACLE FOR TEMPORARY POWER DURING CONSTRUCTION.
4. PROVIDE 120V POWER TO ELECTRIFIED LOCK. CONTRACTOR SHALL COORDINATE THE REQUIREMENT OF ELECTRIFIED LOCK WITH OWNER PRIOR TO THE START OF ROUGH-IN WORK.
5. PROVIDE 2-#10, 1-#10 GROUND. PROVIDE LOW-VOLTAGE TRANSFORMER TO SERVE ELECTRIFIED LOCK. PROVIDE 1P, 20AT BREAKER AT PANEL.
6. PROVIDE CONDUIT AND WIRING THROUGH ELECTRIFIED TRANSFER HINGE.
7. ¾"C. 2#12 + 1#12 GROUND TO NEAREST 120V PANELBOARD. PROVIDE 15A, 1 POLE CIRCUIT BREAKER WITH AIC RATING TO MATCH EXISTING.

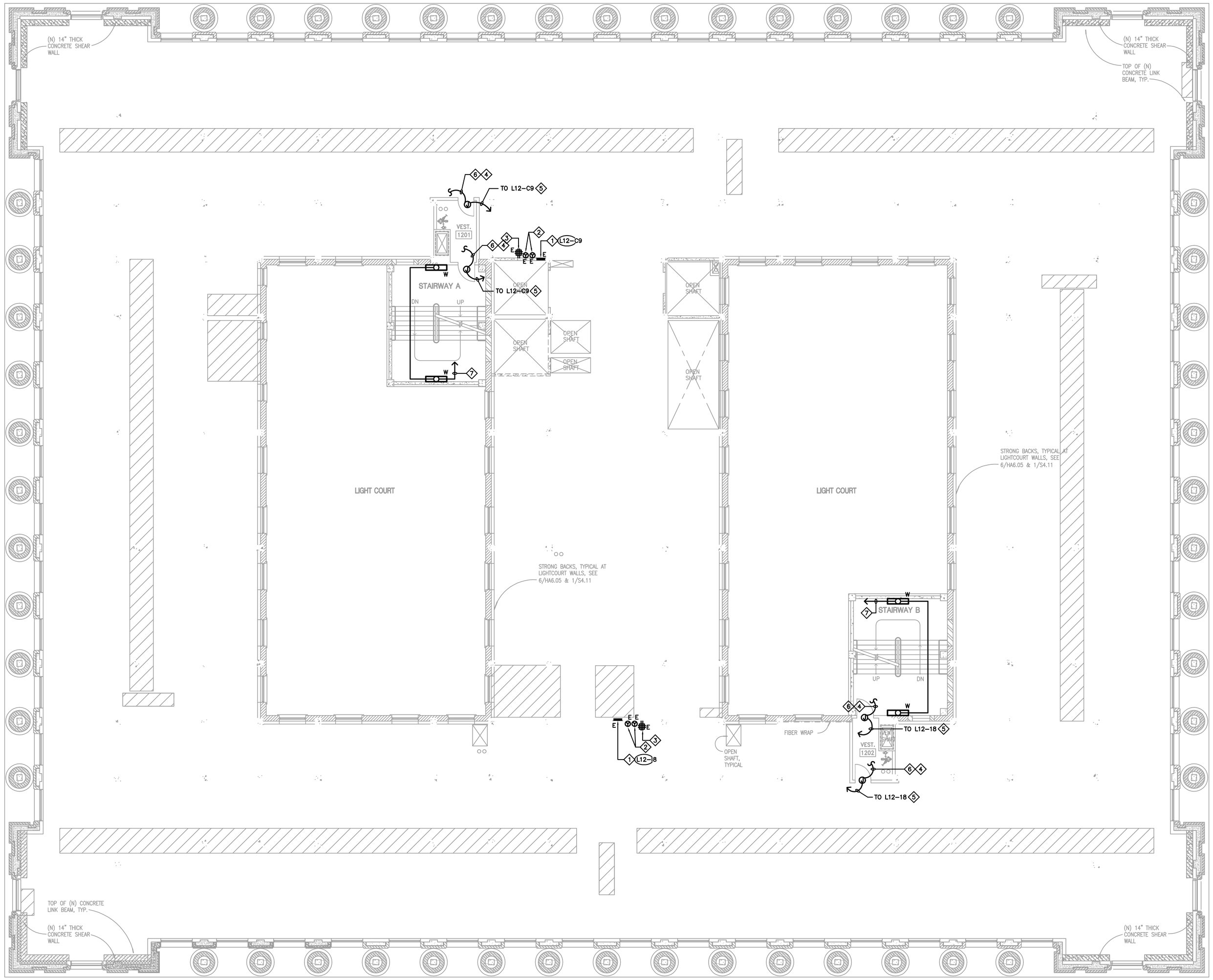

TWELFTH FLOOR PLAN | SCALE: 1/8"=1'-0" | 1

NADEL Architects Inc.

1990 So. Bundy Dr.
Fourth Floor
Los Angeles, CA 90025

T. 310.826.2100
F. 310.826.0182

www.nadelarc.com

CONSULTANT

TMAD TAYLOR & GAINES
• STRUCTURAL • MECHANICAL • ELECTRICAL • CIVIL

100 South Anaheim Boulevard, Suite 150
Anaheim, California 92805
Phone: 714.490.5555
Fax: 714.490.5560
Project No. 2306-154-00

REGISTERED PROFESSIONAL ENGINEER
RET K. SANGUEZA
No. E16622
Exp. 06/30/08
ELECTRICAL
STATE OF CALIFORNIA

COUNTY OF LOS ANGELES
THE HALL OF JUSTICE
STRUCTURAL RETROFIT PHASE

REVISIONS

DRAWING TITLE

TWELFTH FLOOR PLAN

SCOPING DOCUMENTS 100% SUBMISSION AUGUST 2010

SCALE : 1/8"=1'-0"
DATE :
JOB NO : 2306-154-00
SHEET NO.
E2.12

T:\23CAD\2306\2306-154-00\CONSTRUCTION\MPE\E2.12.dwg Jul 08, 2008 - 11:51am

ALL DRAWINGS AND WRITTEN MATERIAL APPEARING HEREIN CONSTITUTE THE ORIGINAL AND UNPUBLISHED WORK OF THE ARCHITECT AND THE SAME MAY NOT BE DUPLICATED, USED OR DISCLOSED WITHOUT THE WRITTEN CONSENT OF THE ARCHITECT. COPYRIGHT: NADEL ARCHITECTS INC. ALL RIGHTS RESERVED.

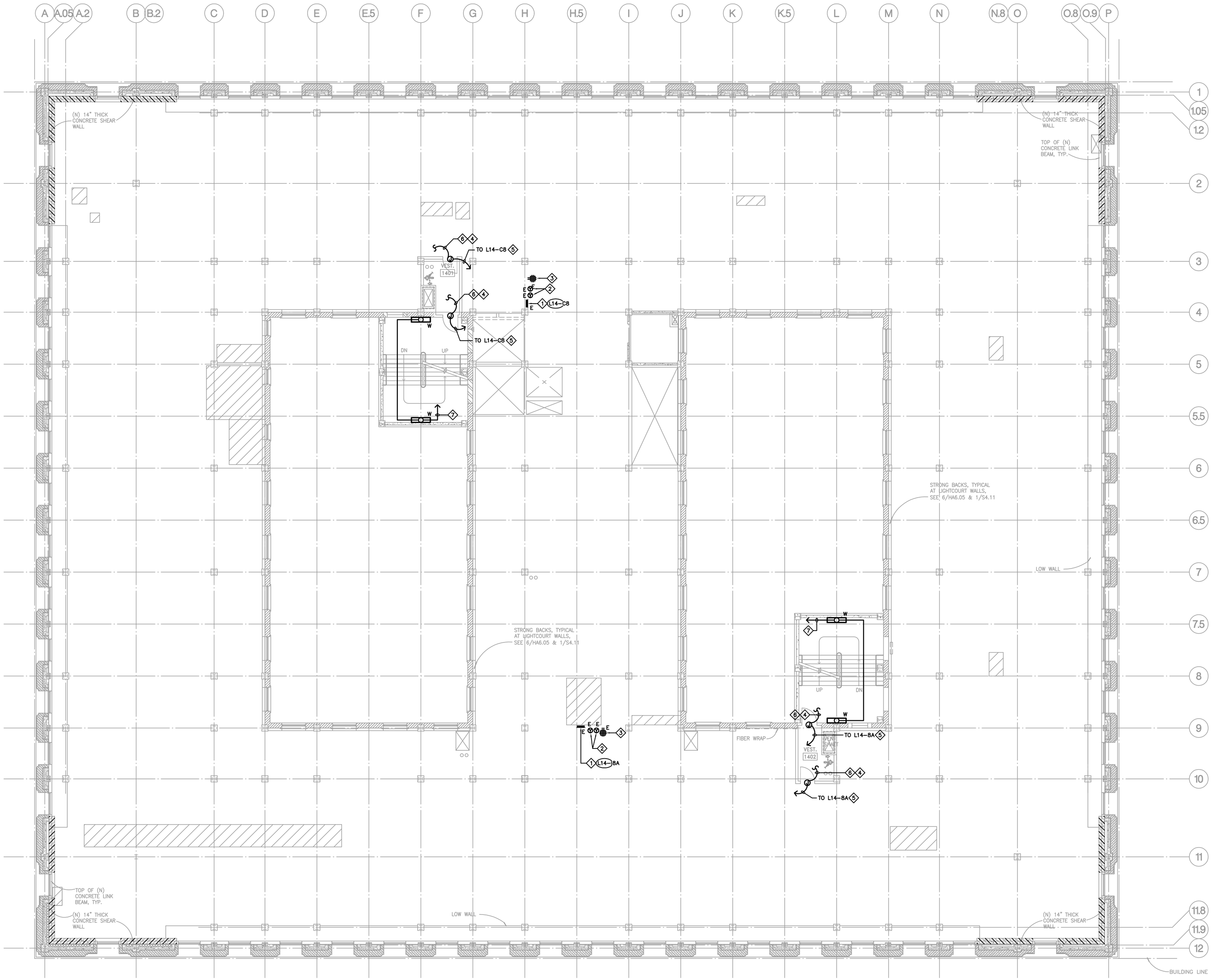

SHEET NOTES

1. EXISTING 120/240V, 1ø, PNL. TO BE UTILIZED FOR TEMPORARY POWER.
2. EXISTING WELDING RECEPTACLE FOR TEMPORARY POWER DURING CONSTRUCTION.
3. EXISTING 20A, 120V. DUPLEX RECEPTACLE FOR TEMPORARY POWER DURING CONSTRUCTION.
4. PROVIDE 120V POWER TO ELECTRIFIED LOCK. CONTRACTOR SHALL COORDINATE THE REQUIREMENT OF ELECTRIFIED LOCK WITH OWNER PRIOR TO THE START OF ROUGH-IN WORK.
5. PROVIDE 2-#10, 1-#10 GROUND. PROVIDE LOW-VOLTAGE TRANSFORMER TO SERVE ELECTRIFIED LOCK. PROVIDE 1P, 20AT BREAKER AT PANEL.
6. PROVIDE CONDUIT AND WIRING THROUGH ELECTRIFIED TRANSFER HINGE.
7. ¾"C. 2#12 + 1#12 GROUND TO NEAREST 120V PANELBOARD. PROVIDE 15A, 1 POLE CIRCUIT BREAKER WITH AIC RATING TO MATCH EXISTING.

NADEL
Architects Inc.

1990 So. Bundy Dr.
Fourth Floor
Los Angeles, CA 90025

T. 310.826.2100
F. 310.826.0182

www.nadelarc.com

CONSULTANT
TMAD TAYLOR & GAINES
• STRUCTURAL • MECHANICAL • ELECTRICAL • CIVIL
100 South Anaheim Boulevard, Suite 150
Anaheim, California 92805
Phone: 714.490.5555
Fax: 714.490.5560
Project No. 2306-154-00

REGISTERED PROFESSIONAL ENGINEER
RET R. SANGUEZA
No. E16622
Exp. 06/30/08
ELECTRICAL
STATE OF CALIFORNIA

COUNTY OF LOS ANGELES
THE HALL OF JUSTICE
STRUCTURAL RETROFIT PHASE

REVISIONS

DRAWING TITLE

FOURTEENTH FLOOR PLAN

SCOPING DOCUMENTS 100% SUBMISSION AUGUST 2010

SCALE : 1/8"=1'-0"
DATE :
JOB NO : 2306-154-00
SHEET NO.
E2.14

FOURTEENTH FLOOR PLAN | SCALE: 1/8"=1'-0" | 1

T:\23CAD\2306\2306-154-00\CONSTRUCTION\MPE\E2.14.dwg Jul 08, 2008 - 11:51am

ALL DRAWINGS AND WRITTEN MATERIAL APPEARING HEREIN CONSTITUTE THE ORIGINAL AND UNPUBLISHED WORK OF THE ARCHITECT AND THE SAME MAY NOT BE DUPLICATED, USED OR DISCLOSED WITHOUT THE WRITTEN CONSENT OF THE ARCHITECT. COPYRIGHT: NADEL ARCHITECTS INC. ALL RIGHTS RESERVED.

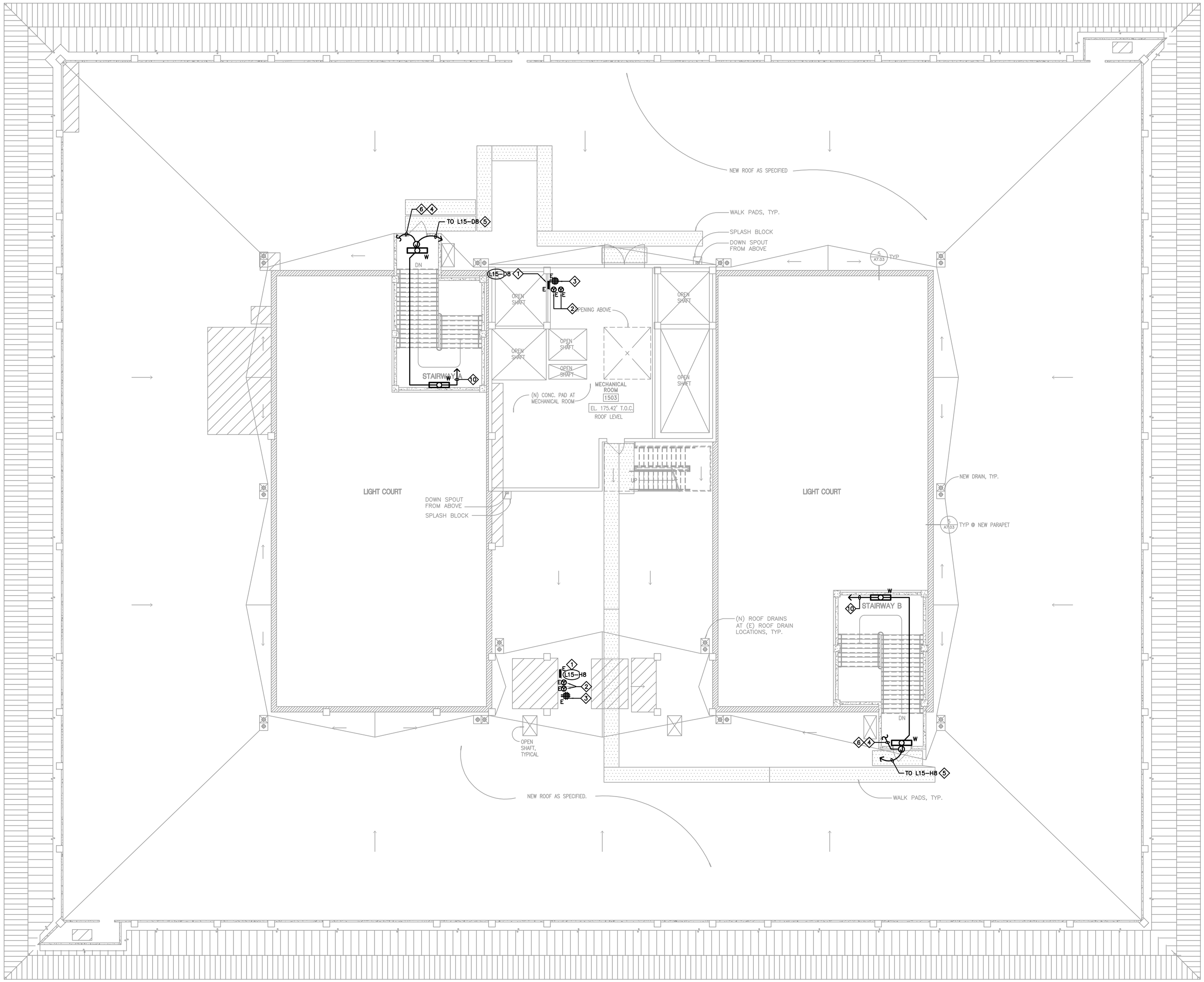

SHEET NOTES

1. EXISTING 120/240V, 1ø, PNL. TO BE UTILIZED FOR TEMPORARY POWER.
2. EXISTING WELDING RECEPTACLE FOR TEMPORARY POWER DURING CONSTRUCTION.
3. EXISTING 20A, 120V. DUPLEX RECEPTACLE FOR TEMPORARY POWER DURING CONSTRUCTION.
4. NOT USED.
5. NOT USED.
6. NOT USED.
7. PROVIDE 120V POWER TO ELECTRIFIED LOCK. CONTRACTOR SHALL COORDINATE THE REQUIREMENT OF ELECTRIFIED LOCK WITH OWNER PRIOR TO THE START OF ROUGH-IN WORK.
8. PROVIDE 2-#10, 1-#10 GROUND. PROVIDE LOW-VOLTAGE TRANSFORMER TO SERVE ELECTRIFIED LOCK. PROVIDE 1P, 20AT BREAKER AT PANEL.
9. PROVIDE CONDUIT AND WIRING THROUGH ELECTRIFIED TRANSFER HINGE.
10. ¾"C. 2#12 + 1#12 GROUND TO NEAREST 120V PANELBOARD. PROVIDE 15A, 1 POLE CIRCUIT BREAKER WITH AIC RATING TO MATCH EXISTING.

PENTHOUSE FLOOR PLAN | SCALE: 1/8"=1'-0" | 1

NADEL
Architects Inc.

1990 So. Bundy Dr.
Fourth Floor
Los Angeles, CA 90025

T. 310.826.2100
F. 310.826.0182

www.nadelarc.com

CONSULTANT

TMAD TAYLOR & GAINES
• STRUCTURAL • MECHANICAL • ELECTRICAL • CIVIL

100 South Anaheim Boulevard, Suite 150
Anaheim, California 92805
Phone: 714.490.5555
Fax: 714.490.5560
Project No. 2306-154-00

REGISTERED PROFESSIONAL ENGINEER
REY R. SANGUEZA
No. E16622
Exp. 06/30/08
ELECTRICAL
STATE OF CALIFORNIA

COUNTY OF LOS ANGELES
THE HALL OF JUSTICE
STRUCTURAL RETROFIT PHASE

REVISIONS

DRAWING TITLE

PENTHOUSE FLOOR PLAN

SCOPING DOCUMENTS 100% SUBMISSION AUGUST 2010

SCALE : 1/8"=1'-0"
DATE :
JOB NO : 2306-154-00
SHEET NO.
E2.15

T:\23CAD\2306\2306-154-00\CONSTRUCTION\MPE\E2.15.dwg Jul 08, 2008 - 11:51am

ALL DRAWINGS AND WRITTEN MATERIAL APPEARING HEREIN CONSTITUTE THE ORIGINAL AND UNPUBLISHED WORK OF THE ARCHITECT AND THE SAME MAY NOT BE DUPLICATED, USED OR DISCLOSED WITHOUT THE WRITTEN CONSENT OF THE ARCHITECT. COPYRIGHT: NADEL ARCHITECTS INC. ALL RIGHTS RESERVED.

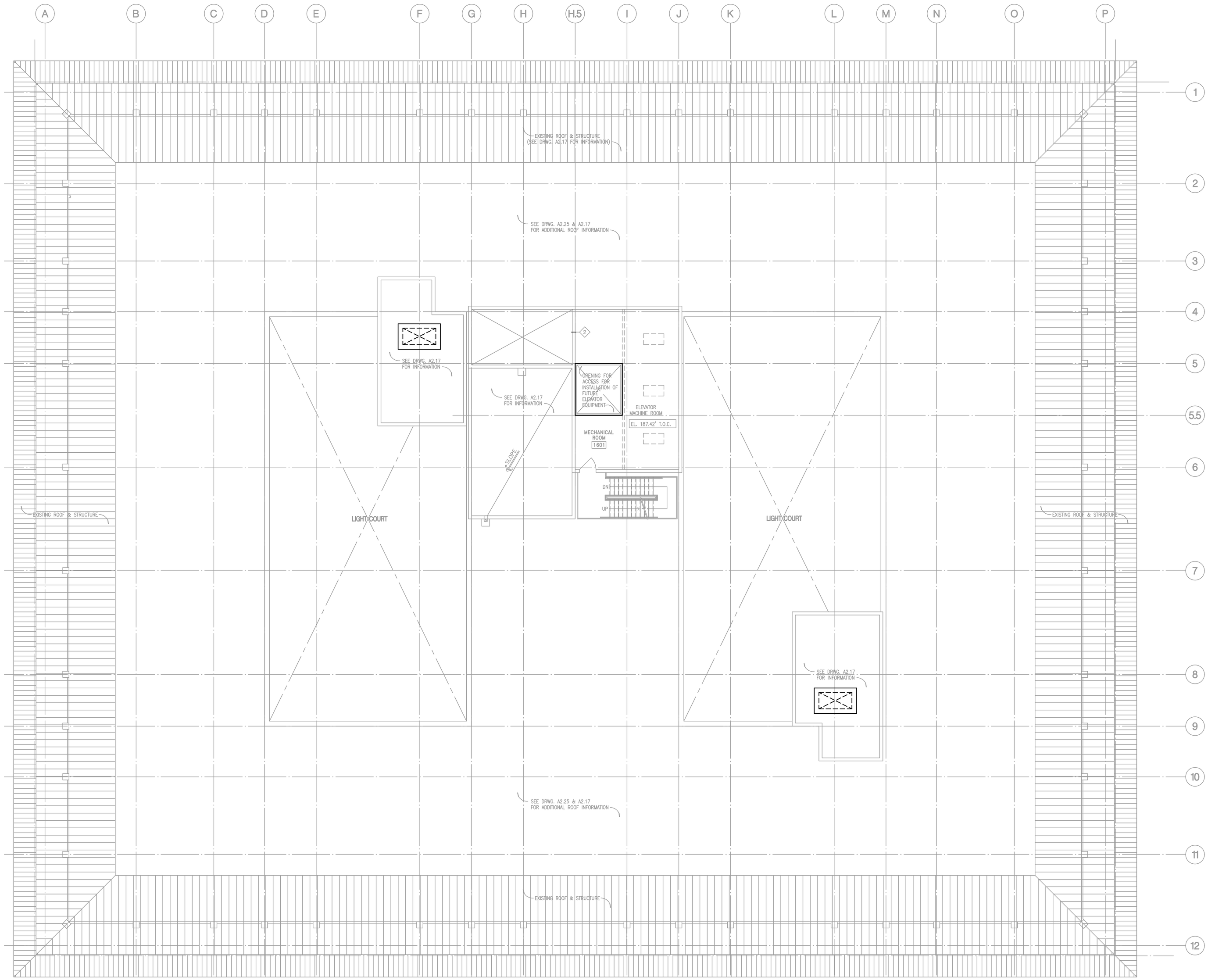

ELEV. MACHINE ROOM PLAN | SCALE: 1/8"=1'-0" | 1

NADEL
Architects Inc.

1990 So. Bundy Dr.
Fourth Floor
Los Angeles, CA 90025

T. 310.826.2100
F. 310.826.0182

www.nadelarc.com

CONSULTANT

TMAD TAYLOR & GAINES
• STRUCTURAL • MECHANICAL • ELECTRICAL • CIVIL

100 South Anaheim Boulevard, Suite 150
Anaheim, California 92805
Phone: 714.490.5555
Fax: 714.490.5560
Project No. 2306-154-00

REGISTERED PROFESSIONAL ENGINEER
RAFAEL SANGUESA
No. E16622
Exp. 06/30/08
ELECTRICAL
STATE OF CALIFORNIA

COUNTY OF LOS ANGELES

THE HALL OF JUSTICE

STRUCTURAL RETROFIT PHASE

REVISIONS

1	
2	
3	
4	
5	
6	

DRAWING TITLE

ELEV. MACHINE ROOM PLAN

SCOPING DOCUMENTS 100% SUBMISSION AUGUST 2010

SCALE : 1/8"=1'-0"
DATE :
JOB NO : 2306-154-00
SHEET NO.

E2.16

T:\23CAD\2306\2306-154-00\CONSTRUCTION\MPE\E2.16.dwg Jul 08, 2008 - 11:51am

ALL DRAWINGS AND WRITTEN MATERIAL APPEARING HEREIN CONSTITUTE THE ORIGINAL AND UNPUBLISHED WORK OF THE ARCHITECT AND THE SAME MAY NOT BE DUPLICATED, USED OR DISCLOSED WITHOUT THE WRITTEN CONSENT OF THE ARCHITECT. COPYRIGHT: NADEL ARCHITECTS INC. ALL RIGHTS RESERVED.

T:\23CAD\2306\2306-154-00\CONSTRUCTION\MPE\E2.17.dwg Jul 08, 2008 - 11:51am

ALL DRAWINGS AND WRITTEN MATERIAL APPEARING HEREIN CONSTITUTE THE ORIGINAL AND UNPUBLISHED WORK OF THE ARCHITECT AND THE SAME MAY NOT BE DUPLICATED, USED OR DISCLOSED WITHOUT THE WRITTEN CONSENT OF THE ARCHITECT. COPYRIGHT: NADEL ARCHITECTS INC. ALL RIGHTS RESERVED.

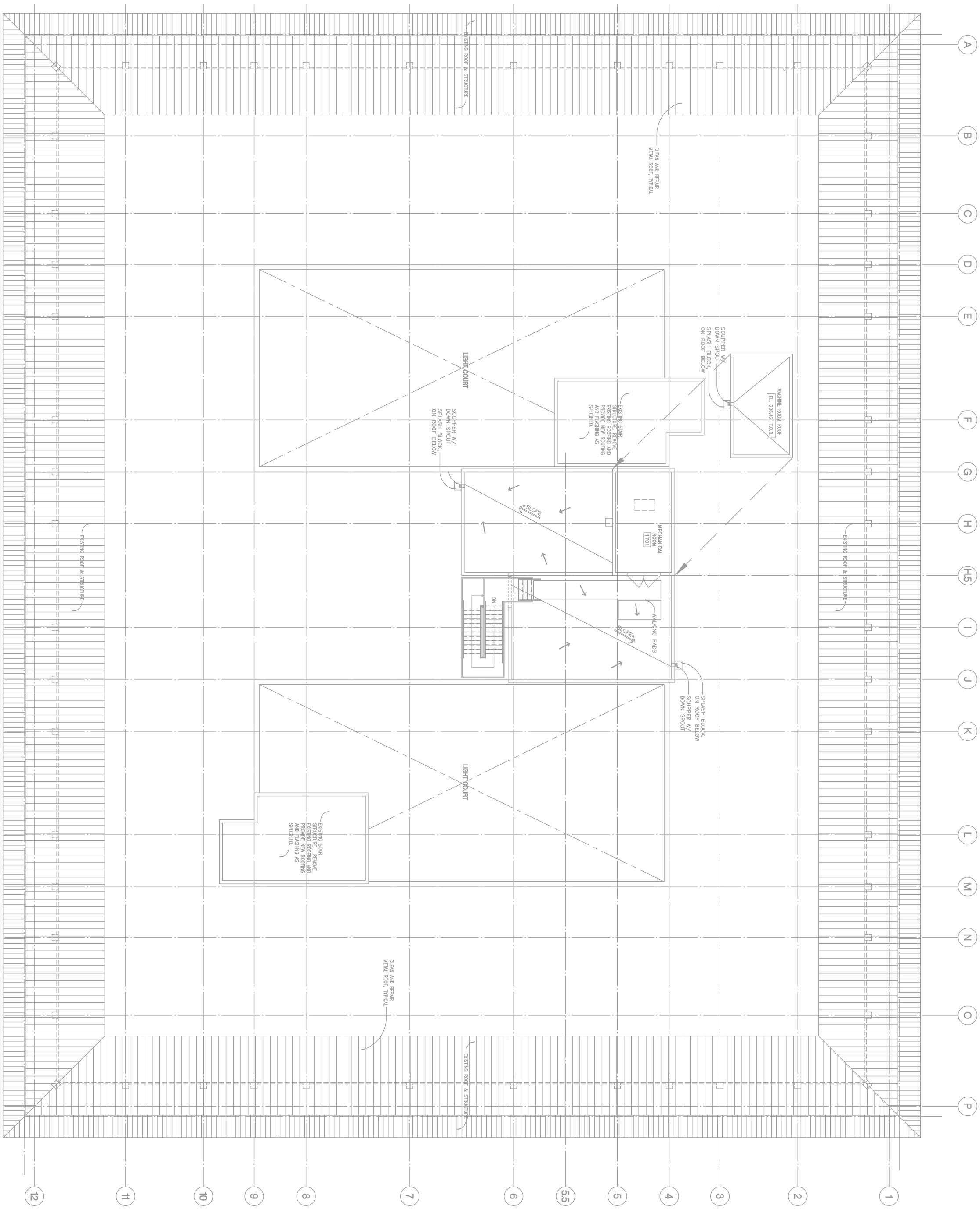

ELEV. MACHINE ROOM ROOF PLAN

SCALE: 1/8"=1'-0"

1

NADEL Architects Inc.
1990 So. Bundy Dr.
Fourth Floor
Los Angeles, CA 90025
T. 310.826.2100
F. 310.826.0182
www.nadelarc.com

CONSULTANT
TMAD TAYLOR & GAINES
• STRUCTURAL • MECHANICAL • ELECTRICAL • CIVIL
100 South Anaheim Boulevard, Suite 150
Anaheim, California 92805
Phone: 714.490.5555
Fax: 714.490.5560
Project No. 2306-154-00

REGISTERED PROFESSIONAL ENGINEER
REY R. SANGUEZA
No. E16622
Exp. 06/30/08
ELECTRICAL
STATE OF CALIFORNIA

COUNTY OF LOS ANGELES
THE HALL OF JUSTICE
STRUCTURAL RETROFIT PHASE

REVISIONS

DRAWING TITLE

ELEV. MACHINE ROOM ROOF PLAN

SCALE : 1/8"=1'-0"
DATE :
JOB NO : 2306-154-00
SHEET NO.
E2.17

SCOPING DOCUMENTS 100% SUBMISSION AUGUST 2010

SHEET NOTES

1. REPLACE EXISTING FUSE WITH 175A TIME DELAY FUSES AT 240VAC.
2. REPLACE EXISTING FUSE WITH 175A TIME DELAY AT 240VAC.
3. (E) 3#4/0, 3"C-FEEDER.
4. (E) PANEL TO UTILIZE. CONTRACTOR TO PROVIDE 90A, 2-POLE, 240V CIRCUIT BREAKER UL LISTED FOR USE ON THE PANELBOARD.
5. NOT USED.

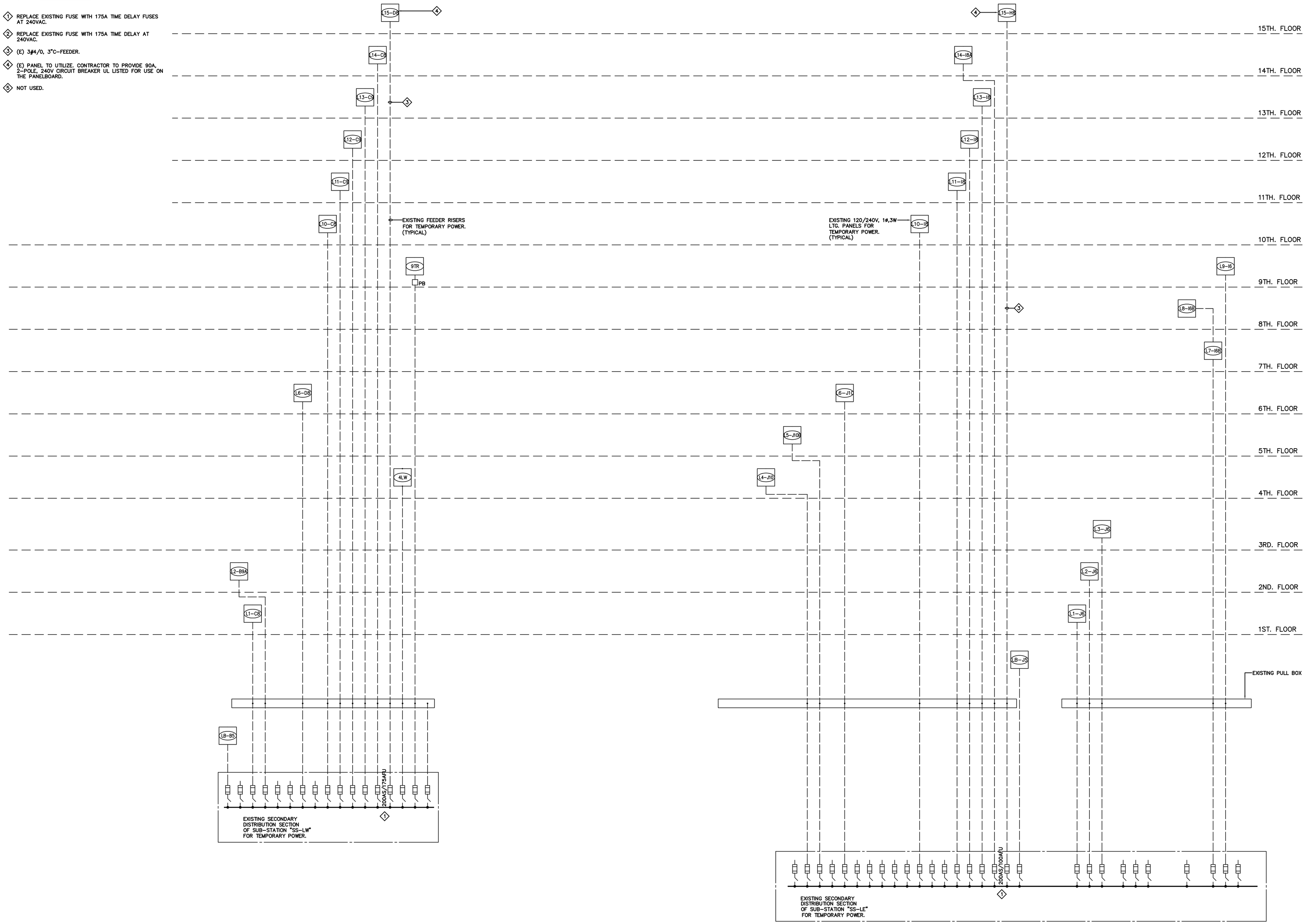

EXISTING SINGLE LINE DIAGRAM TEMPORARY POWER

SCALE: NONE

1

NADEL Architects Inc.

1990 So. Bundy Dr.
Fourth Floor
Los Angeles, CA 90025

T. 310.826.2100
F. 310.826.0182

www.nadelarc.com

CONSULTANT

TMAD TAYLOR & GAINES
• STRUCTURAL • MECHANICAL • ELECTRICAL • CIVIL

100 South Anaheim Boulevard, Suite 150
Anaheim, California 92805
Phone: 714.490.5555
Fax: 714.490.5560
Project No. 2306-154-00

REGISTERED PROFESSIONAL ENGINEER
NEY R. SANGUEZA
No. E16622
Exp. 06/30/08
ELECTRICAL
STATE OF CALIFORNIA

COUNTY OF LOS ANGELES

THE HALL OF JUSTICE

STRUCTURAL RETROFIT PHASE

REVISIONS

DRAWING TITLE

EXISTING SINGLE LINE DIAGRAM TEMPORARY POWER

SCALE : 1/8"=1'-0"

DATE :

JOB NO : 2306-154-00

SHEET NO.

E4.00

SCOPING DOCUMENTS 100% SUBMISSION AUGUST 2010

T:\23CAD\2306\2306-154-00\CONSTRUCTION\MPE\E4.00.dwg Jul 08, 2008 - 11:51am

ALL DRAWINGS AND WRITTEN MATERIAL APPEARING HEREIN CONSTITUTE THE ORIGINAL AND UNPUBLISHED WORK OF THE ARCHITECT AND THE SAME MAY NOT BE DUPLICATED, USED OR DISCLOSED WITHOUT THE WRITTEN CONSENT OF THE ARCHITECT. COPYRIGHT: NADEL ARCHITECTS INC. ALL RIGHTS RESERVED.