12/3/2022

SEAWORLD
REALM ICONS
SAN DIEGO, CA

DRAWING INDEX		
Sheet	Sheet Title	REV
000.00	COVER AND INDEX	--
001.01	GENERAL INFORMATION	--
010.01	TYPICAL SLAB AND FOOTER DETAIL	1
010.02	TYPICAL SLAB AND FOOTER DETAIL	1
020.01	TYPICAL DOLPHIN SWELLS DETAILS	--
020.02	TYPICAL ORCA SWELLS DETAILS	--
021.01	TYPICAL SWIMMING DOLPHIN DETAILS	--
021.02	TYPICAL SWIMMING ORCA DETAILS	--
022.01	TYPICAL SWELL DOLPHIN AND ORCA MOUNT DETAILS	1
030.01	FIBERGLASS TO FRAME ATTACHMENT DETAIL	--
100.01	SITE PLAN	1
200.01	ORCA ENTRY POINT ICON EP-A LOCATION PLAN (PLANTER 3)	1
300.01	ORCA MAIN PLANTER ICON EP-B LOCATION PLAN (PLANTER 2)	1
301.01	BREACHING ORCA ISOs PLAN AND ELEVATIONS	--
302.01	BREACHING ORCA SECTION	--
310.01	BREACHING ORCA FRAME	--
310.02	BREACHING ORCA FRAME	--
400.01	DOLPHIN CENTRAL PLANTER ICON DP-A LOCATION PLAN (PLANTER 1)	1
401.01	BREACHING DOLPHIN ISOs PLAN AND ELEVATIONS	--
402.01	BREACHING DOLPHINS SECTIONS	--
410.01	BREACHING DOLPHINS FRAME	--
410.02	BREACHING DOLPHINS FRAME	--
500.01	OCEANS PLAYGROUND DOLPHIN ICON OP-A LOCATION PLAN (PLANTER 4)	1
600.01	DOLPHIN PLANTER ICON OP-B LOCATION PLAN (PLANTER 5)	1
601.01	PARTIAL BREACHING DOLPHIN ISOs PLAN AND ELEVATIONS	--
602.01	PARTIAL BREACHING DOLPHIN SECTION	--
610.01	PARTIAL BREACHING DOLPHIN FRAME	--
700.01	REEF EXPLORER ENTRY PORTAL RF-A LOCATION PLAN (PLANTER 6)	--
701.01	REEF EXPLORER ENTRY PORTAL RF-A	--
701.02	REEF EXPLORER ENTRY PORTAL RF-A	--
701.03	REEF EXPLORER ENTRY PORTAL RF-A	--
701.04	REEF EXPLORER ENTRY PORTAL RF-A	--
701.05	REEF EXPLORER ENTRY PORTAL RF-A	--
702.01	REEF EXPLORER ENTRY PORTAL RF-A	--
702.02	REEF EXPLORER ENTRY PORTAL RF-A	--
703.01	REEF EXPLORER ENTRY PORTAL RF-A	--
704.01	REEF EXPLORER ENTRY PORTAL RF-A	--
710.01	REEF EXPLORER ENTRY PORTAL RF-A	--
710.02	REEF EXPLORER ENTRY PORTAL RF-A	--

SEAWORLD
SAN DIEGO
REALM ICONS

REV.	DATE	BY	DESCRIPTION
△			
△			
△			
△			
△			
△			

This Document contains confidential material and trade secret information belonging exclusively to the client. Any unauthorized use, disclosure, dissemination or duplication of the information contained herein may result in liability under applicable laws.

nassal™
ORLANDO • LOS ANGELES
www.builtbynassal.com

Drawn By: JSL
Checked By: MN
Date: 07-07-22
Job Number: 1059
Project: SWSD REALM ICONS
Building/Attraction:
Drawing Title: COVER AND INDEX
Part No.
Scale: AS NOTED
Drawing No. 000.00
REV. ----

THESE DRAWINGS MAY NOT BE USED FOR ANY PURPOSE WITHOUT PRIOR WRITTEN CONSENT OF THE NASSAL CO.

J:\9059-02 - SWSD Realm Icons\NASSAL DRAWINGS\COVER.dwg

NOTE: FULL SIZE DRAWING IS 34 X 22

12/3/2022

STRUCTURAL INFORMATION

GENERAL NOTE:

1. VERIFY SITE CONDITIONS

STANDARD HATCHES

- METAL
- EARTH
- CONCRETE ROCKWORK STRUCTURE
- GRAVEL
- TEXTURE FINISH GYPSUM PLASTER STUCCO SAND
- FIBERGLASS (FRP) PLASTIC
- PLYWOOD
- MDF
- WOOD FRAMING, METAL FRAMING STUD, BLOCKING
- FOAM
- WOOD
- NET
- GRATE
- SHAKE ROOF
- ARBITRARY NON IMPORTANT OBJECTS

SEAWORLD
SAN DIEGO
REALM ICONS

ABBREVIATIONS

ACP	ACOUSTIC CEILING PANEL SYSTEM
ADD'L	ADDITIONAL
AFF	ABOVE FINISHED FLOOR
ALT	ALTERNATE
ALUM	ALUMINUM
APPROX	APPROXIMATE(LY)
~	APPROXIMATELY (USE W/ NUMBERS)
ARCH	ARCHITECTURAL
ASTM	AMERICAN SOCIETY FOR TESTING AND MATERIALS
AFF	ABOVE FINISHED FLOOR
B.O.	BOTTOM OF
B.O.T.	BOTTOM OF TRUSS
B.O.H.	BOTTOM OF HEADER
B.O.W.	BOTTOM OF WALL
BD	BOARD
BH	BUTTON HEAD
BLDG	BUILDING
BLKG	BLOCKING
BM	BEAM
BRG	BEARING
CBORE	COUNTERBORE(D)
CER	CERAMIC
CHEM	CHEMICAL
CIP	CAST-IN-PLACE
CJ	CONTROL JOINT
CL	CENTERLINE
CLG	CEILING
CLR	CLEAR
CMU	CONCRETE MASONRY UNIT
CNC	COMPUTER NUMERICAL CONTROL
COL	COLUMN
CONC	CONCRETE
CONT	CONTINUE/CONTINUOUS
CSK	COUNTERSINK/COUNTERSUNK
DET	DETAIL
DIA	DIAMETER
DIAG	DIAGONAL
DIM	DIMENSION
DN	DOWN
DWG(S)	DRAWING(S)
EA	EACH
EJ	EXPANSION JOINT
EL	ELEVATION
EMBED	EMBEDMENT
EQ	EQUAL/EQUIVALENT
EQUIP	EQUIPMENT
EW	EACH WAY
EXIST	EXISTING
EXP	EXPANSION
EXT	EXTERIOR
EXT-G	EXTERIOR GRADE
FD	FLOOR DRAIN
FDN	FOUNDATION
FF	FACTORY FINISH
FFE	FINISH FLOOR ELEVATION
FH	FLAT HEAD
FIN	FINISH(ED)
FL	FLOOR
FR	FIRE RETARDANT
FRP	FIBER REINFORCED PLASTIC
FT	FOOT/FEET
GA	GAGE, GAUGE
GALV	GALVANIZED
GFRC	GLASS FIBER REINFORCED CONCRETE
GFRG	GLASS FIBER REINFORCED GYPSUM
GL	GLASS, GLAZING
GYP	GYPSUM
GWB	GYPSUM BOARD
HC	HOLLOW CORE
HD GALV	HOT DIPPED GALVANIZED
HM	HOLLOW METAL
HORZ	HORIZONTAL
HP	HIGH POINT
HSS	HOLLOW STRUCTURAL SECTION
HT	HEIGHT
ID	INSIDE DIAMETER
INSUL	INSULATION
INT	INTERIOR
KSI	KIPS PER SQUARE INCH
LG	LENGTH/LONG
LF	LINEAR FEET
LH	LEFT HAND ORIENTATION
LT	LIGHT
MACH	MACHINE
MAX	MAXIMUM
MECH	MECHANICAL
MD	METAL DECK ASSEMBLY
MDF	MEDIUM-DENSITY FIBERBOARD
MDO	MEDIUM DENSITY OVERLAY
MFR	MANUFACTURE
MAT	MATERIAL
MTL	METAL
MIN	MINIMUM
MISC	MISCELLANEOUS
NO OR #	NUMBER
NOM	NOMINAL
NTS	NOT TO SCALE
N/A	NOT APPLIED
OA	OVERALL
OC	ON CENTER
OD	OUTSIDE DIAMETER
OH	OVAL HEAD
OPG	OPENING
OPP	OPPOSITE
PCF	POUNDS PER CUBIC FOOT
PERF	PERFORATED
PH	PAN HEAD
PL	PLATE
PLWD	PLYWOOD
PSF	POUNDS PER SQUARE FOOT
PSI	POUNDS PER SQUARE INCH
PT	PRESSURE TREATED
PVC	POLYVINYL CHLORIDE
QTY	QUANTITY
R	RISER
RAD	RADIUS
RB	RUBBER
REQ'D	REQUIRED
REINF	REINFORCEMENT
RET	RETAINING
REV	REVISION(S), REVISED
RH	RIGHT HAND ORIENTATION
RIV	RIVET
RO	ROUGH OPENING
RW	ROCKWORK
SC	SOLID CORE
SCH	SCHEDULE
SD	SMOKE DETECTOR
SECT	SECTION
SHT	SHEET
SIM	SIMILAR
SPEC	SPECIFICATION(S)
SPKR	SPEAKER
SPV	SCENIC PREFAB VENDOR
SQ	SQUARE
SS	STAINLESS STEEL
STD	STANDARD
STL	STEEL
SUSP	SUSPENDED
SYM	SYMMETRICAL
T.O.	TOP OF
T.O.B.	TOP OF BEAM
T.O.F.	TOP OF FOUNDATION
T.O.S.	TOP OF SLAB
T.O.W.	TOP OF WALL
T&B	TOP & BOTTOM
T&G	TONGUE & GROOVE
TBD	TO BE DETERMINED
TCP	THEMED CARVED PLASTER
TEMP	TEMPERED
THK	THICK
THRU	THROUGH
TRANSV	TRANSVERSE
TS	TUBE STEEL
TYP	TYPICAL
UNO	UNLESS NOTED OTHERWISE
VERT	VERTICAL
VIF	VERIFY IN FIELD
W	WIDE FLANGE
W/	WITH
W/O	WITHOUT
WB	WOOD BASE
WD	WOOD
WJ	WATERJET
WDW	WINDOW
WP	WATERPROOF(ING)
WTF	WATER TIGHT FOUNDATION
WWF	WELDED WIRE FABRIC

STANDARD SYMBOLS

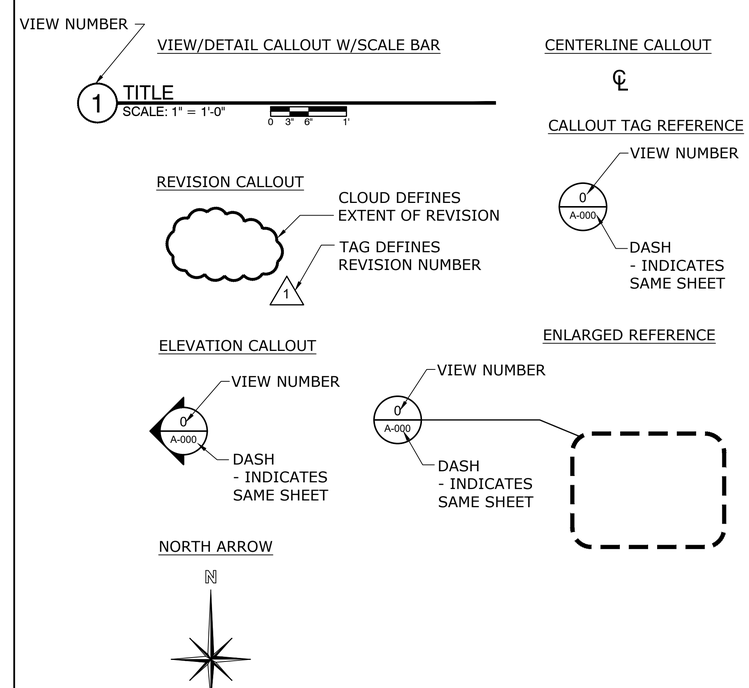

REV.	DATE	BY	DESCRIPTION

This Document contains confidential material and trade secret information belonging exclusively to the client. Any unauthorized use, disclosure, dissemination or duplication of the information contained herein may result in liability under applicable laws.

nassal™
ORLANDO • LOS ANGELES
www.builtbynassal.com

Drawn By: JSL
Checked By: MN
Date: 07-03-22
Job Number: 1059
Project: SWSD REALM ICONS
Building/Attraction:
Drawing Title: GENERAL INFORMATION
Part No.
Scale: AS NOTED
Drawing No. 001.01
REV. ----

THESE DRAWINGS MAY NOT BE USED FOR ANY PURPOSE WITHOUT PRIOR WRITTEN CONSENT OF THE NASSAL CO.

J:\9059-02 - SWSD Realm Icons\NASSAL DRAWINGS\GEN INFO.dwg

NOTE: FULL SIZE DRAWING IS 34 X 22

12/3/2022

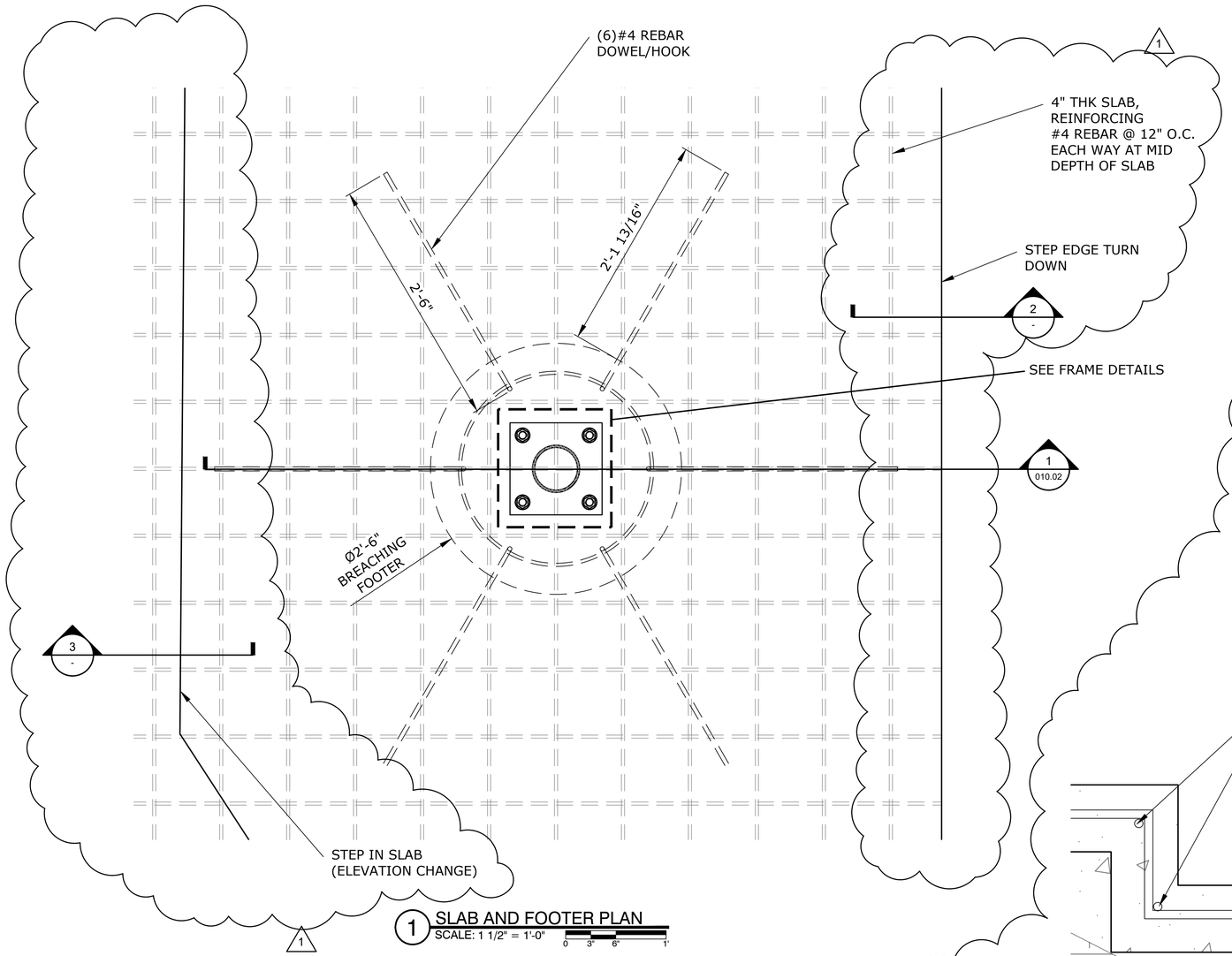

1 SLAB AND FOOTER PLAN
SCALE: 1 1/2" = 1'-0"

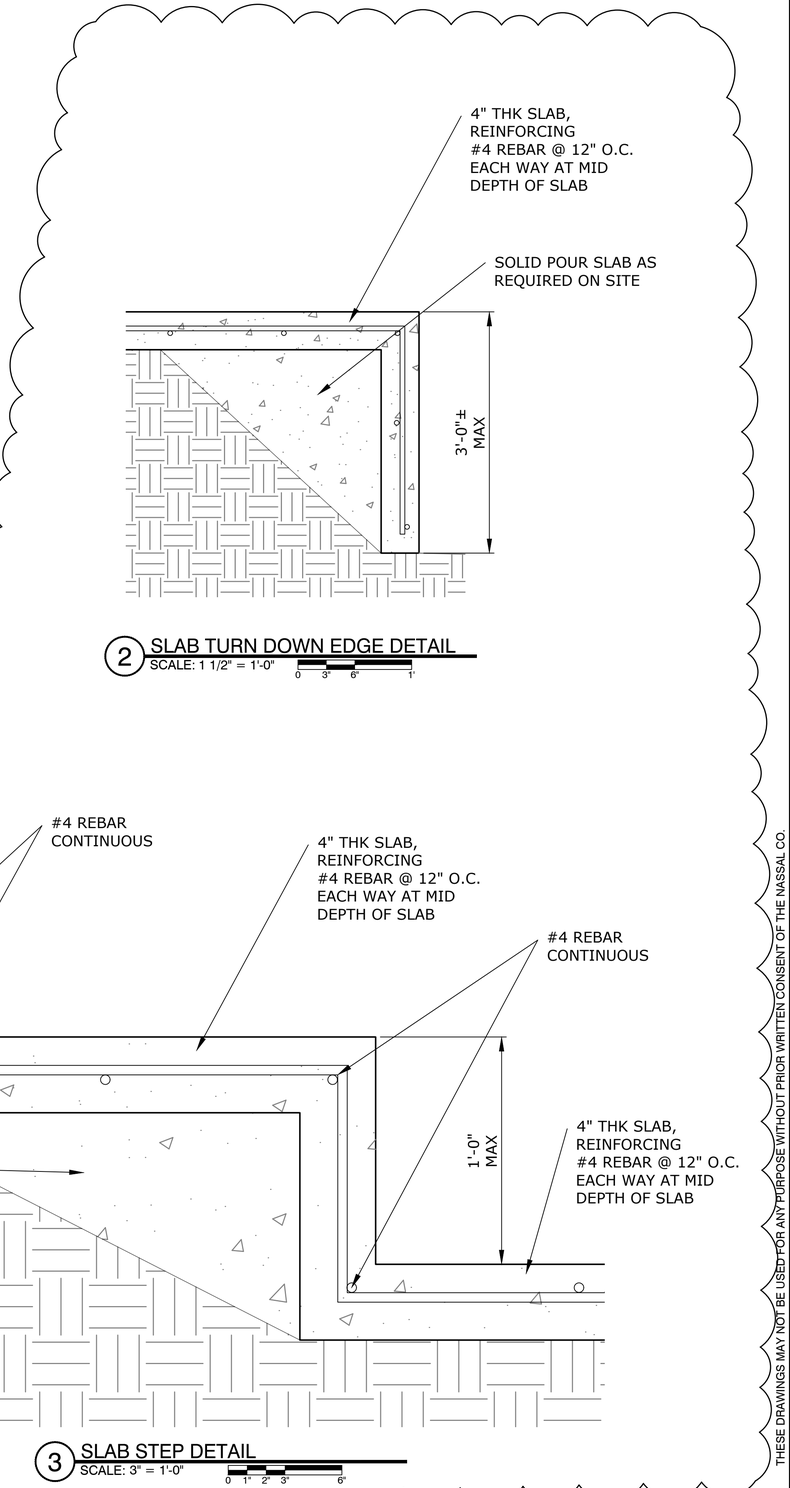

2 SLAB TURN DOWN EDGE DETAIL
SCALE: 1 1/2" = 1'-0"

3 SLAB STEP DETAIL
SCALE: 3" = 1'-0"

SEAWORLD
SAN DIEGO
REALM ICONS

REV.	DATE	BY	DESCRIPTION
1	12-03-22	JSL	REVISION

This Document contains confidential material and trade secret information belonging exclusively to the client. Any unauthorized use, disclosure, dissemination or duplication of the information contained herein may result in liability under applicable laws.

nassal™
ORLANDO • LOS ANGELES
www.builtbynassal.com

Drawn By: JSL
Checked By: MN
Date: 07-07-22
Job Number: 1059
Project: SWSD REALM ICONS
Building/Attraction:
Drawing Title: TYPICAL SLAB AND FOOTER DETAIL
Part No.
Scale: AS NOTED
Drawing No. 010.01
REV. ----

THESE DRAWINGS MAY NOT BE USED FOR ANY PURPOSE WITHOUT PRIOR WRITTEN CONSENT OF THE NASSAL CO.

J:\9059-02 - SWSD Realm Icons\NASSAL DRAWINGS\TYPICAL DETAILS.dwg

NOTE: FULL SIZE DRAWING IS 34 X 22

12/3/2022

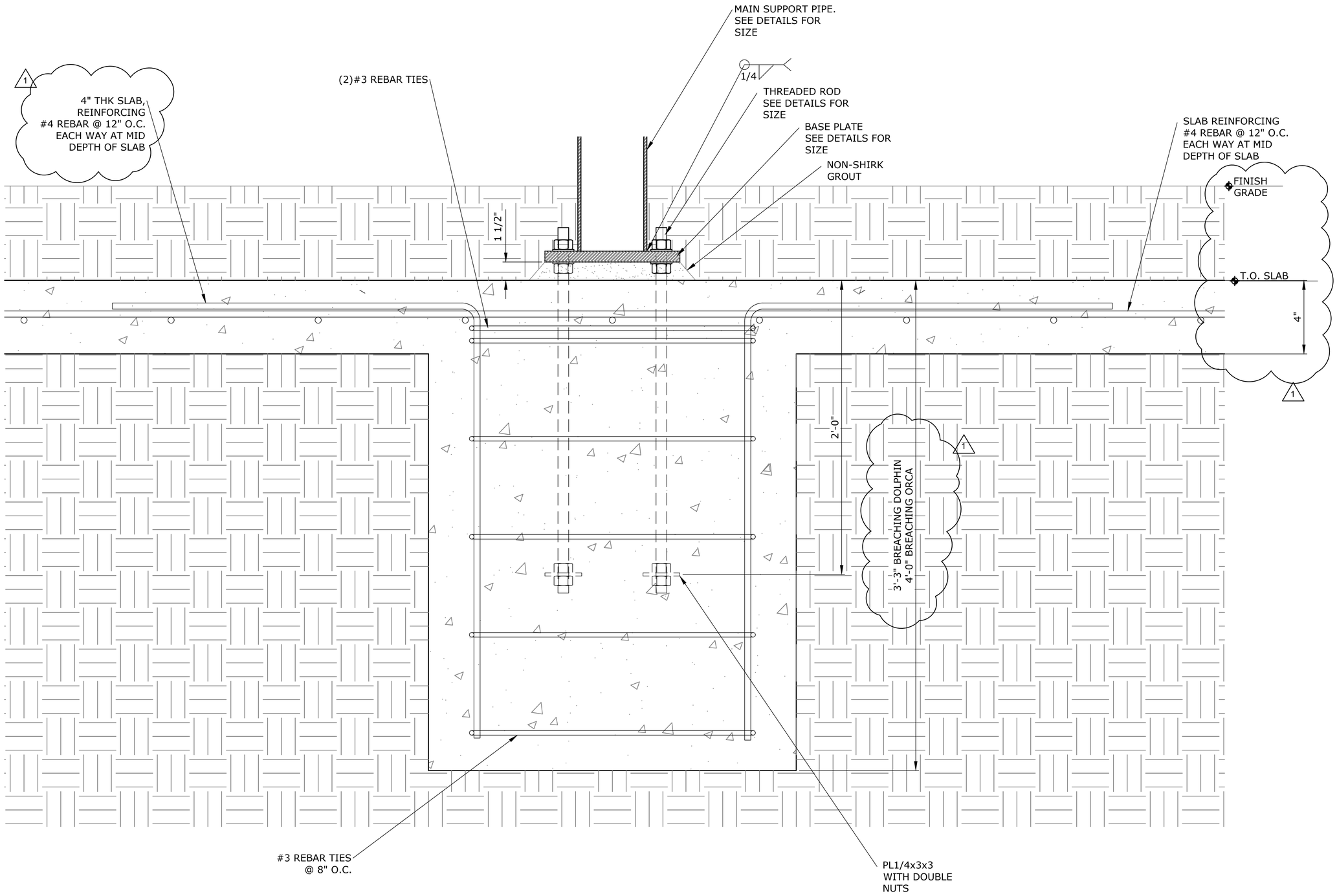

1 SLAB AND FOOTER SECTION
SCALE: 3" = 1'-0"
0 1" 2" 3" 6"

SEAWORLD
SAN DIEGO
REALM ICONS

REV.	DATE	BY	DESCRIPTION
1	12-03-22	JSL	REVISION

This Document contains confidential material and trade secret information belonging exclusively to the client. Any unauthorized use, disclosure, dissemination or duplication of the information contained herein may result in liability under applicable laws.

nassal™
ORLANDO • LOS ANGELES
www.builtbynassal.com

Drawn By: JSL
Checked By: MN
Date: 07-07-22
Job Number: 1059
Project: SWSD REALM ICONS
Building/Attraction:
Drawing Title: TYPICAL SLAB AND FOOTER DETAIL
Part No.
Scale: AS NOTED
Drawing No. 010.02
REV. ----

THESE DRAWINGS MAY NOT BE USED FOR ANY PURPOSE WITHOUT PRIOR WRITTEN CONSENT OF THE NASSAL CO.

J:\9059-02 - SWSD Realm Icons\NASSAL DRAWINGS\TYPICAL DETAILS.dwg

NOTE: FULL SIZE DRAWING IS 34 X 22

12/3/2022

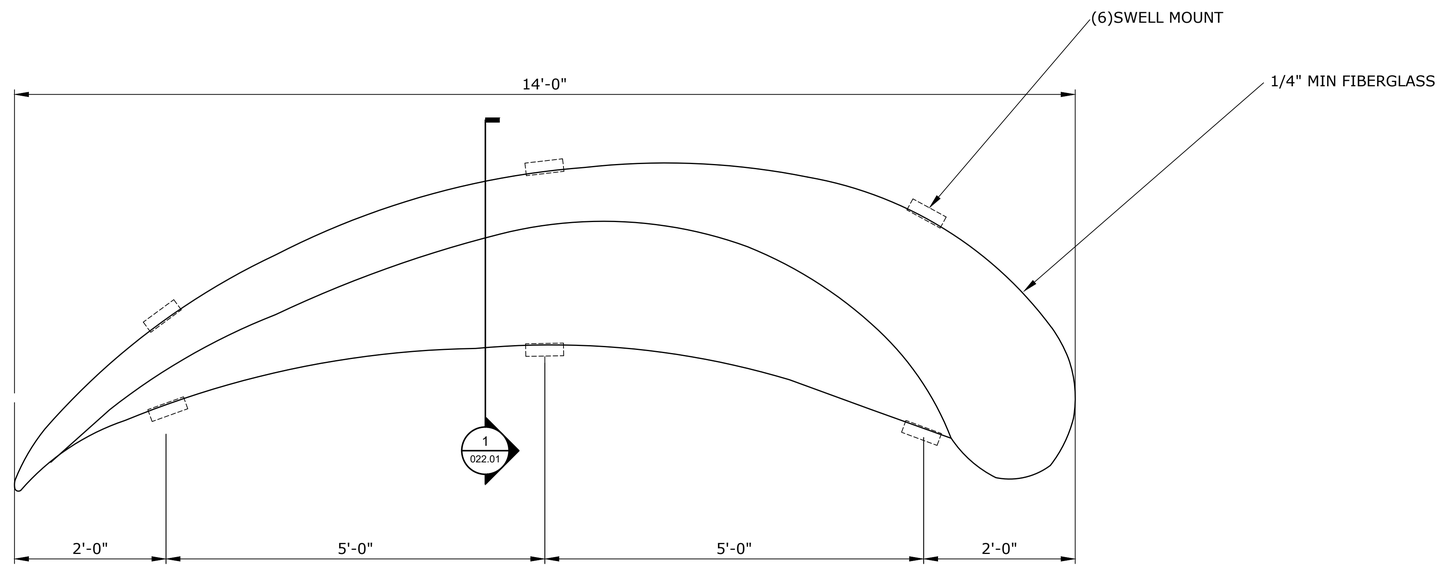

1 DOLPHIN SWELL 14'-0" (QTY 1)
SCALE: 1" = 1'-0"

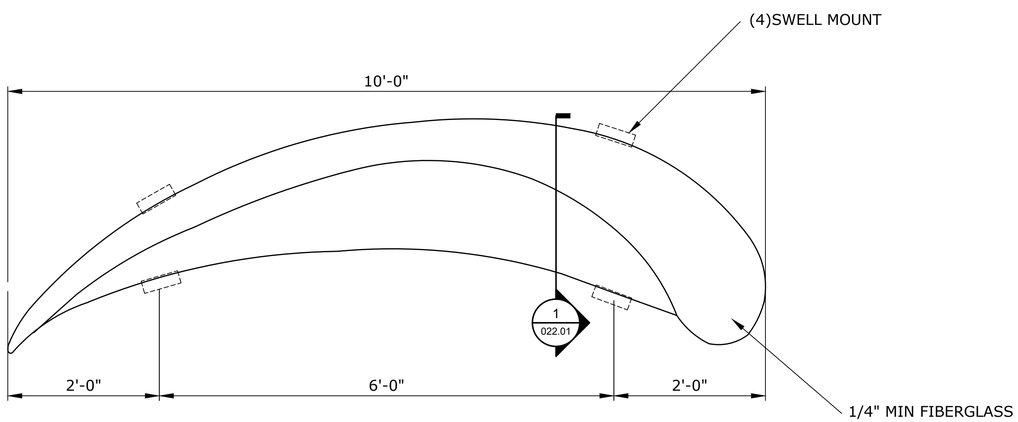

2 DOLPHIN SWELL 10'-0" (QTY 6)
SCALE: 1" = 1'-0"

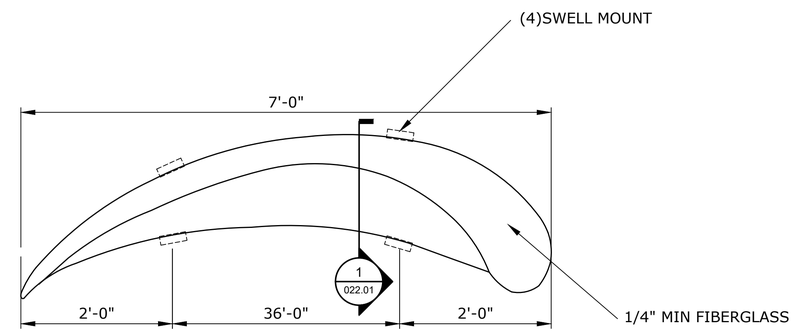

3 DOLPHIN SWELL 7'-0" (QTY 7)
SCALE: 1" = 1'-0"

NOTE:
ADD ADDITIONAL SWELL
MOUNT AS REQUIRED

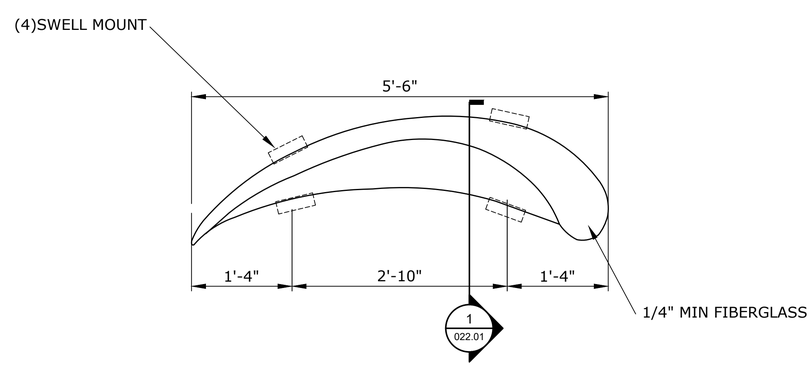

4 DOLPHIN SWELL 5'-6" (QTY 2)
SCALE: 1" = 1'-0"

SEAWORLD
SAN DIEGO
REALM ICONS

REV.	DATE	BY	DESCRIPTION
△			
△			
△			
△			
△			
△			

This Document contains confidential material and trade secret information belonging exclusively to the client. Any unauthorized use, disclosure, dissemination or duplication of the information contained herein may result in liability under applicable laws.

nassal™
ORLANDO • LOS ANGELES
www.builtbynassal.com

Drawn By: JSL
Checked By: MN
Date: 07-07-22
Job Number: 1059
Project: SWSD REALM ICONS
Building/Attraction:
Drawing Title: TYPICAL DOLPHIN SWELLS DETAILS
Part No.
Scale: AS NOTED
Drawing No. 020.01
REV. ----

THESE DRAWINGS MAY NOT BE USED FOR ANY PURPOSE WITHOUT PRIOR WRITTEN CONSENT OF THE NASSAL CO.

J:\9059-02 - SWSD Realm Icons\NASSAL DRAWINGS\TYPICAL DETAILS.dwg

NOTE: FULL SIZE DRAWING IS 34 X 22

12/3/2022

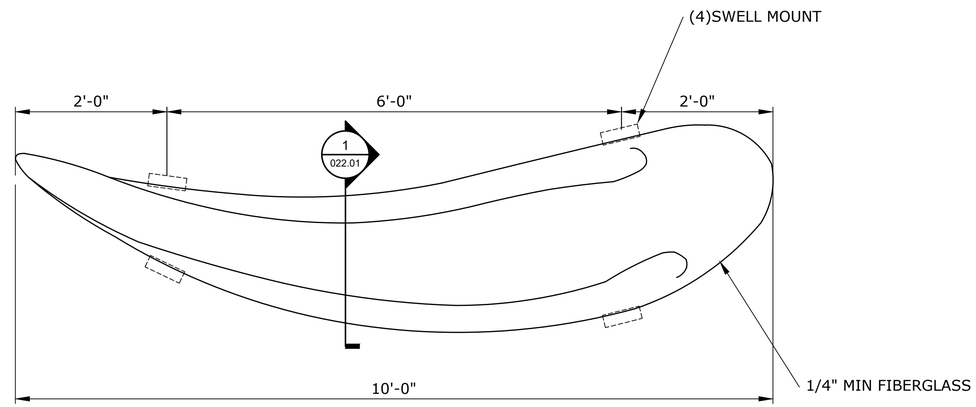

1 ORCA SWELL 10'-0" (QTY 3)
SCALE: 1" = 1'-0"

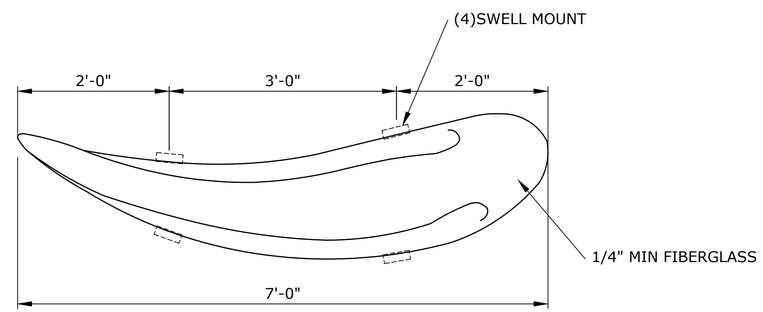

2 ORCA SWELL 7'-0" (QTY 5)
SCALE: 1" = 1'-0"

NOTE:
ADD ADDITIONAL SWELL
MOUNT AS REQUIRED

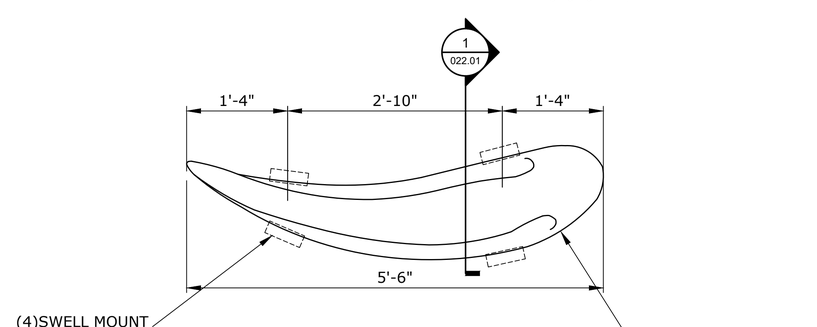

3 ORCA SWELL 5'-6" (QTY 2)
SCALE: 1" = 1'-0"

SEAWORLD
SAN DIEGO
REALM ICONS

REV.	DATE	BY	DESCRIPTION

This Document contains confidential material and trade secret information belonging exclusively to the client. Any unauthorized use, disclosure, dissemination or duplication of the information contained herein may result in liability under applicable laws.

nassal™
ORLANDO • LOS ANGELES
www.builtbynassal.com

Drawn By: JSL
Checked By: MN
Date: 07-07-22
Job Number: 1059
Project: SWSD REALM ICONS
Building/Attraction:
Drawing Title: TYPICAL ORCA SWELLS DETAILS
Part No.
Scale: AS NOTED
Drawing No. 020.02
REV. ----

THESE DRAWINGS MAY NOT BE USED FOR ANY PURPOSE WITHOUT PRIOR WRITTEN CONSENT OF THE NASSAL CO.

J:\9059-02 - SWSD Realm Icons\NASSAL DRAWINGS\TYPICAL DETAILS.dwg

NOTE: FULL SIZE DRAWING IS 34 X 22

12/3/2022

J:\9059-02 - SWSD Realm Icons\NASSAL DRAWINGS\TYPICAL DETAILS.dwg

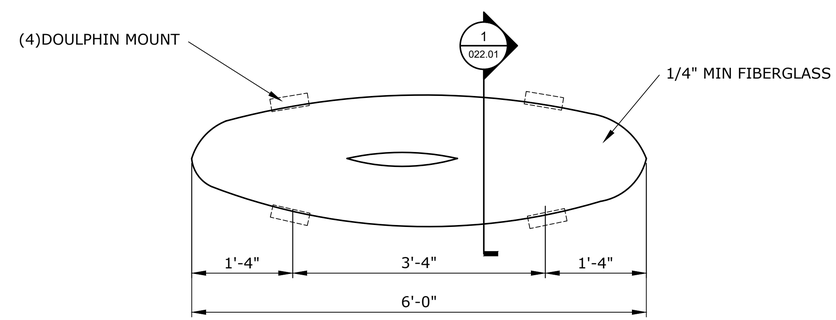

1 SWIMMING DOLPHIN 6'-0"
SCALE: 1" = 1'-0"
0 3" 6" 1'

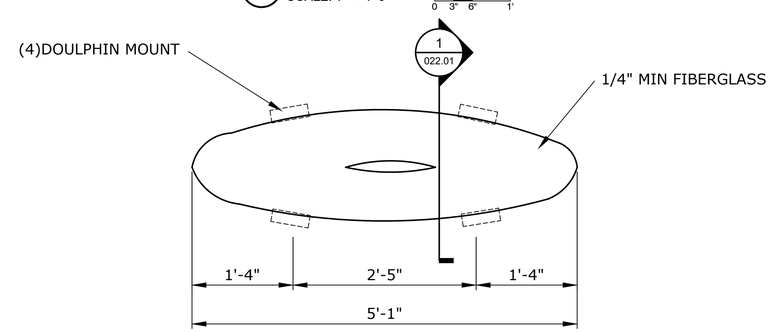

2 SWIMMING DOLPHIN 5'-1"
SCALE: 1" = 1'-0"
0 3" 6" 1'

NOTE:
ADD ADDITIONAL DOLPHIN MOUNT AS REQUIRED

SEAWORLD
SAN DIEGO
REALM ICONS

REV.	DATE	BY	DESCRIPTION

This Document contains confidential material and trade secret information belonging exclusively to the client. Any unauthorized use, disclosure, dissemination or duplication of the information contained herein may result in liability under applicable laws.

nassal™
ORLANDO • LOS ANGELES
www.builtbynassal.com

Drawn By: JSL
Checked By: MN
Date: 07-07-22
Job Number: 1059
Project: SWSD REALM ICONS
Building/Attraction:
Drawing Title: TYPICAL SWIMMING DOLPHIN DETAILS
Part No.
Scale: AS NOTED
Drawing No. 021.01
REV. ----

THESE DRAWINGS MAY NOT BE USED FOR ANY PURPOSE WITHOUT PRIOR WRITTEN CONSENT OF THE NASSAL CO.

NOTE: FULL SIZE DRAWING IS 34 X 22

12/3/2022

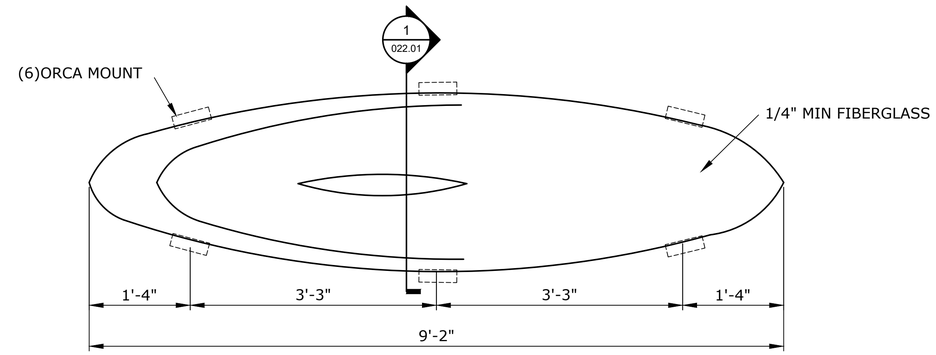

1 SWIMMING ORCA 9'-2"
SCALE: 1" = 1'-0"

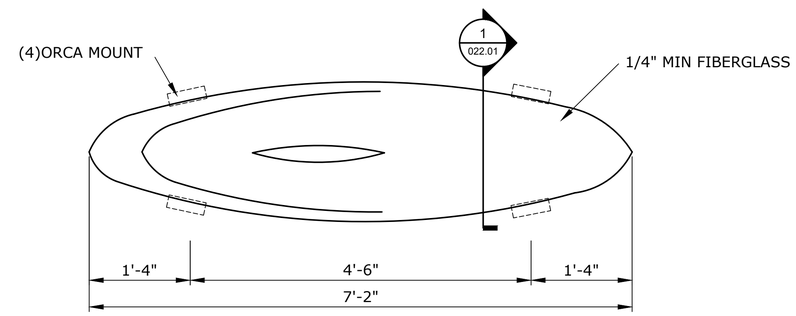

2 SWIMMING ORCA 7'-2"
SCALE: 1" = 1'-0"

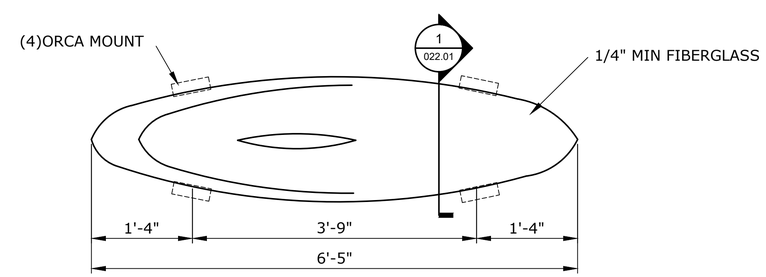

3 SWIMMING ORCA 6'-5"
SCALE: 1" = 1'-0"

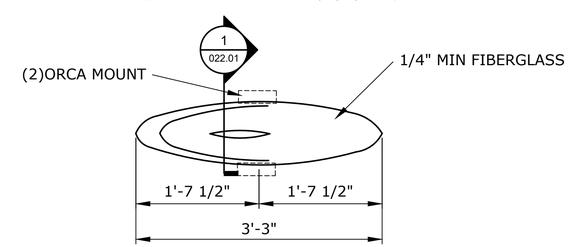

4 SWIMMING ORCA 3'-3"
SCALE: 1" = 1'-0"

NOTE:
ADD ADDITIONAL ORCA
MOUNT AS REQUIRED

SEAWORLD
SAN DIEGO
REALM ICONS

REV.	DATE	BY	DESCRIPTION
△			
△			
△			
△			
△			
△			

This Document contains confidential material and trade secret information belonging exclusively to the client. Any unauthorized use, disclosure, dissemination or duplication of the information contained herein may result in liability under applicable laws.

nassal™
ORLANDO • LOS ANGELES
www.builtbynassal.com

Drawn By: JSL
Checked By: MN
Date: 07-07-22
Job Number: 1059
Project: SWSD REALM ICONS
Building/Attraction:
Drawing Title: TYPICAL SWIMMING ORCA DETAILS
Part No.
Scale: AS NOTED
Drawing No. 021.02
REV. ----

THESE DRAWINGS MAY NOT BE USED FOR ANY PURPOSE WITHOUT PRIOR WRITTEN CONSENT OF THE NASSAL CO.

J:\9059-02 - SWSD Realm Icons\NASSAL DRAWINGS\TYPICAL DETAILS.dwg

NOTE: FULL SIZE DRAWING IS 34 X 22

12/3/2022

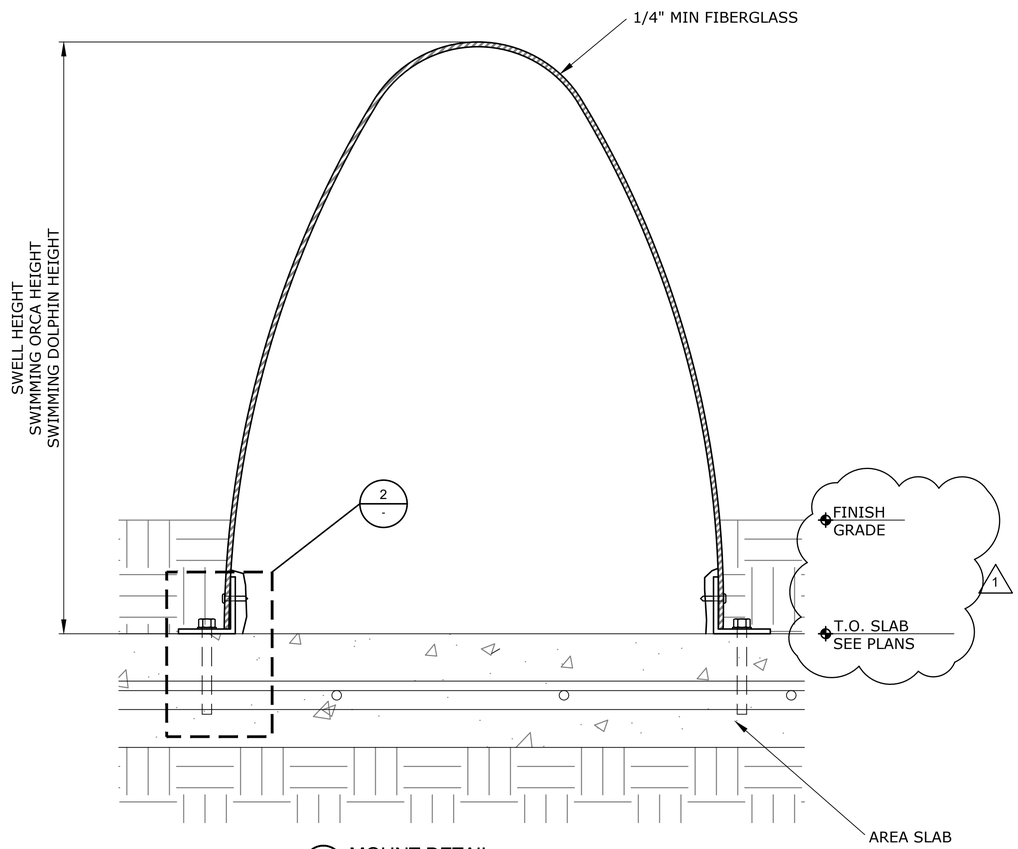

1 MOUNT DETAIL
SCALE: 3" = 1'-0"

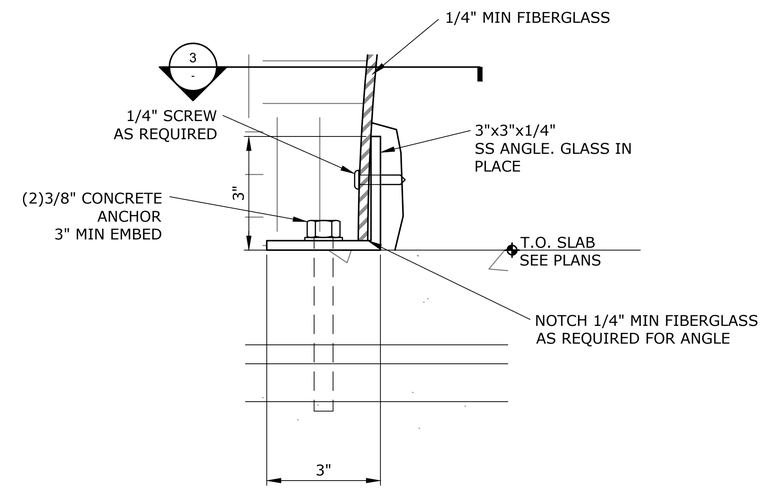

2 MOUNT DETAIL
SCALE: HALF

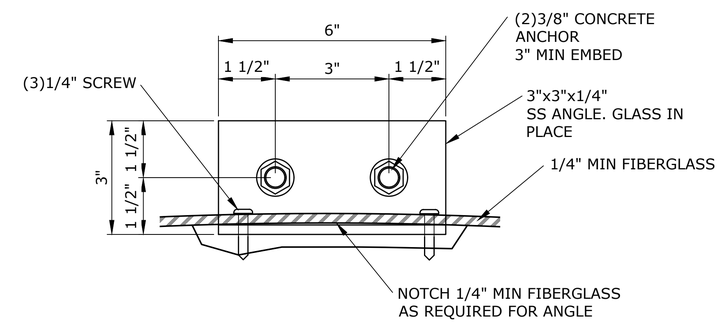

3 MOUNT DETAIL
SCALE: HALF

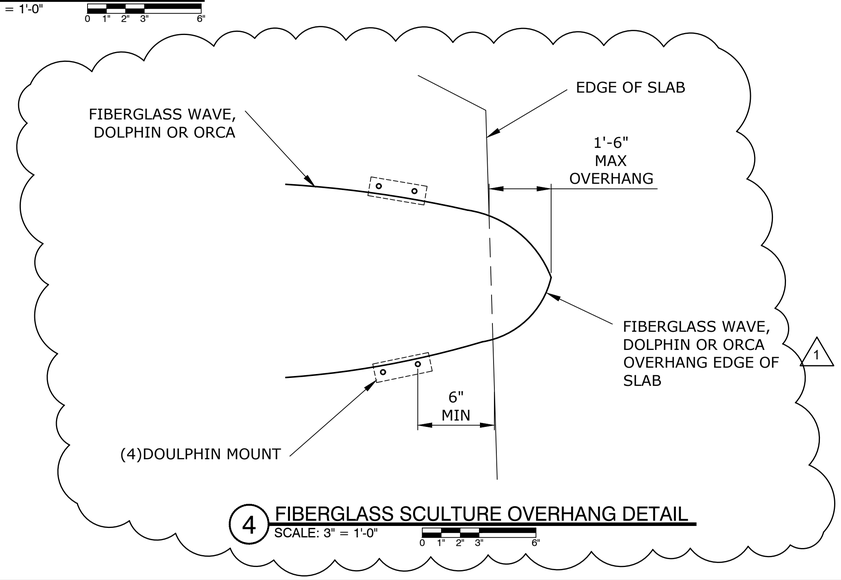

4 FIBERGLASS SCULTURE OVERHANG DETAIL
SCALE: 3" = 1'-0"

SEAWORLD
SAN DIEGO
REALM ICONS

REV.	DATE	BY	DESCRIPTION
1	12-03-22	JSL	REVISION

This Document contains confidential material and trade secret information belonging exclusively to the client. Any unauthorized use, disclosure, dissemination or duplication of the information contained herein may result in liability under applicable laws.

nassal™
ORLANDO • LOS ANGELES
www.builtbynassal.com

Drawn By: JSL
Checked By: MN
Date: 07-07-22
Job Number: 1059
Project: SWSD REALM ICONS
Building/Attraction:
Drawing Title: TYPICAL SWELL DOLPHIN AND ORCA MOUNT DETAILS
Part No.
Scale: AS NOTED
Drawing No. 022.01
REV. ----

THESE DRAWINGS MAY NOT BE USED FOR ANY PURPOSE WITHOUT PRIOR WRITTEN CONSENT OF THE NASSAL CO.

J:\9059-02 - SWSD Realm Icons\NASSAL DRAWINGS\TYPICAL DETAILS.dwg

NOTE: FULL SIZE DRAWING IS 34 X 22

12/3/2022

J:\9059-02 - SWSD Realm Icons\NASSAL DRAWINGS\TYPICAL DETAILS.dwg

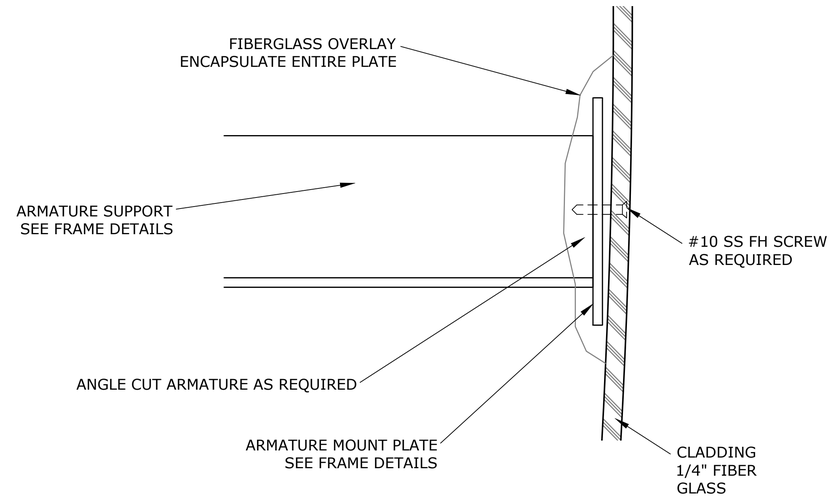

1 FIBERGLASS TO FRAME ATTACHMENT
SCALE: NONE

SEAWORLD
SAN DIEGO
REALM ICONS

REV.	DATE	BY	DESCRIPTION
△			
△			
△			
△			
△			
△			

This Document contains confidential material and trade secret information belonging exclusively to the client. Any unauthorized use, disclosure, dissemination or duplication of the information contained herein may result in liability under applicable laws.

nassal™
ORLANDO • LOS ANGELES
www.builtbynassal.com

Drawn By: JSL
Checked By: MN
Date: 07-07-22
Job Number: 1059
Project: SWSD REALM ICONS
Building/Attraction:
Drawing Title: FIBERGLASS TO FRAME ATTACHMENT DETAIL
Part No.
Scale: AS NOTED
Drawing No. 030.01
REV. ----

THESE DRAWINGS MAY NOT BE USED FOR ANY PURPOSE WITHOUT PRIOR WRITTEN CONSENT OF THE NASSAL CO.

NOTE: FULL SIZE DRAWING IS 34 X 22

12/3/2022

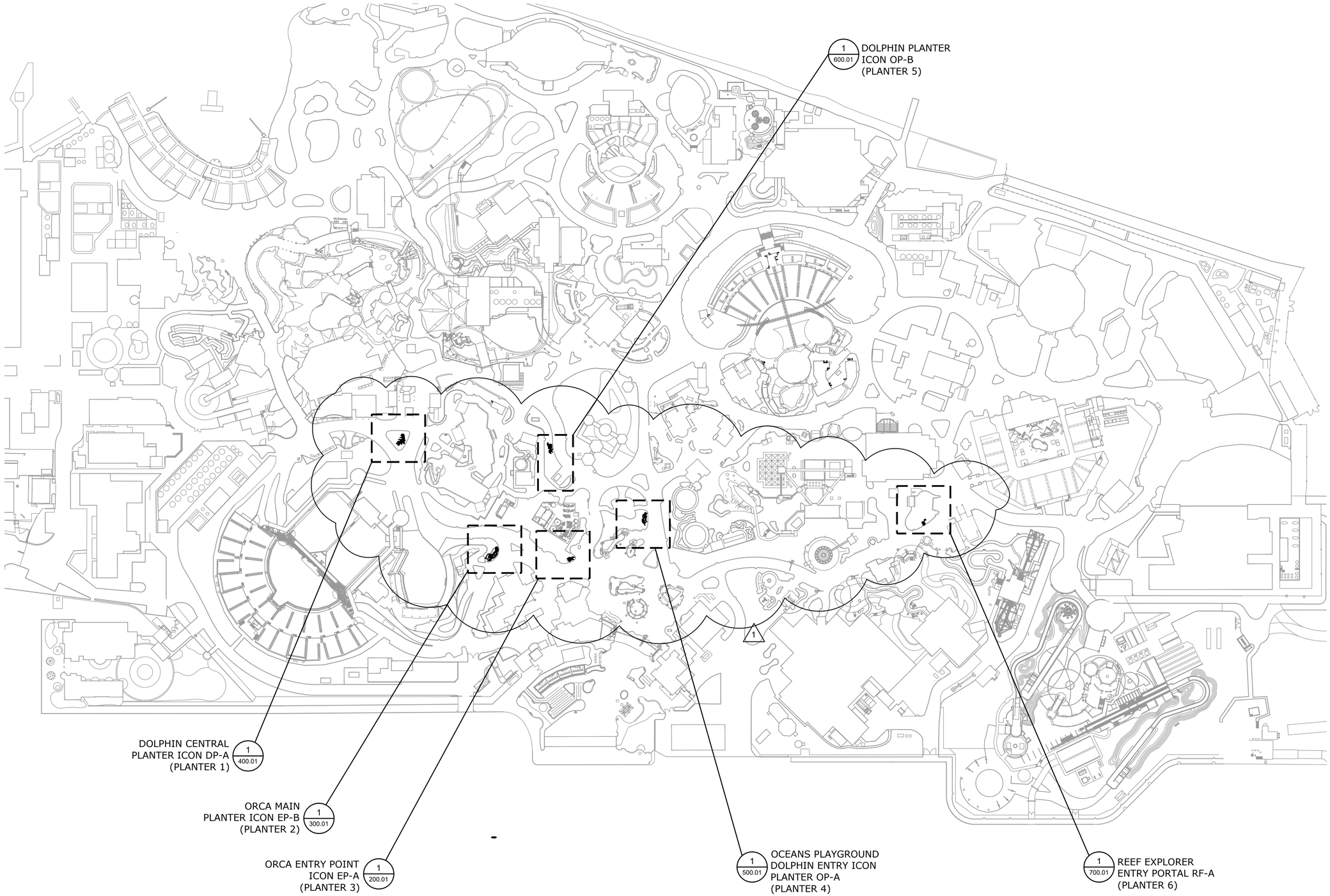

1 SITE PLAN
SCALE: NONE

SEAWORLD
SAN DIEGO
REALM ICONS

REV.	DATE	BY	DESCRIPTION
1	12-03-22	JSL	REVISION

This Document contains confidential material and trade secret information belonging exclusively to the client. Any unauthorized use, disclosure, dissemination or duplication of the information contained herein may result in liability under applicable laws.

nassal™
ORLANDO • LOS ANGELES
www.builtbynassal.com

Drawn By: JSL
Checked By: MN
Date: 07-07-22
Job Number: 1059
Project: SWSD REALM ICONS
Building/Attraction:
Drawing Title: SITE PLAN
Part No.
Scale: AS NOTED
Drawing No. 100.01
REV. ----

THESE DRAWINGS MAY NOT BE USED FOR ANY PURPOSE WITHOUT PRIOR WRITTEN CONSENT OF THE NASSAL CO.

J:\9059-02 - SWSD Realm Icons\NASSAL DRAWINGS\SITE PLAN.dwg

NOTE: FULL SIZE DRAWING IS 34 X 22

12/3/2022

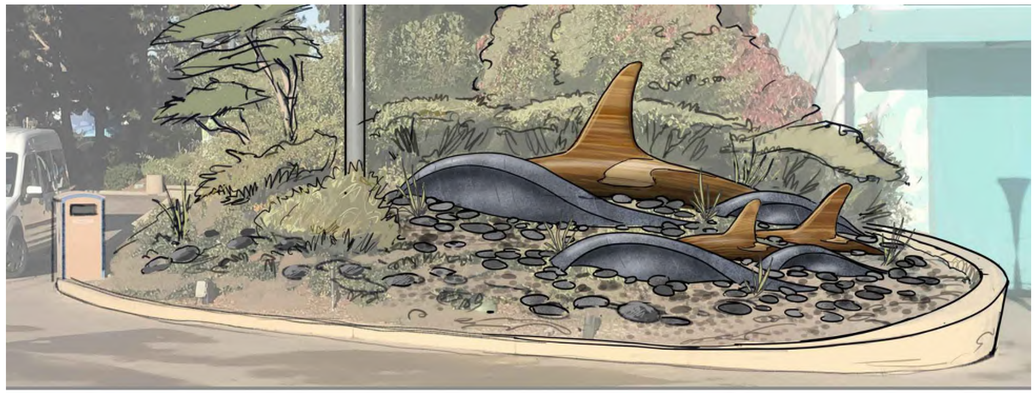

ORCA ENTRY POINT ICON EP-A REF IMAGE

NOTE:
SEE SHEET 020.02 FOR TYPICAL ORCA SWELLS

021.02 FOR SWIMMING ORCAS

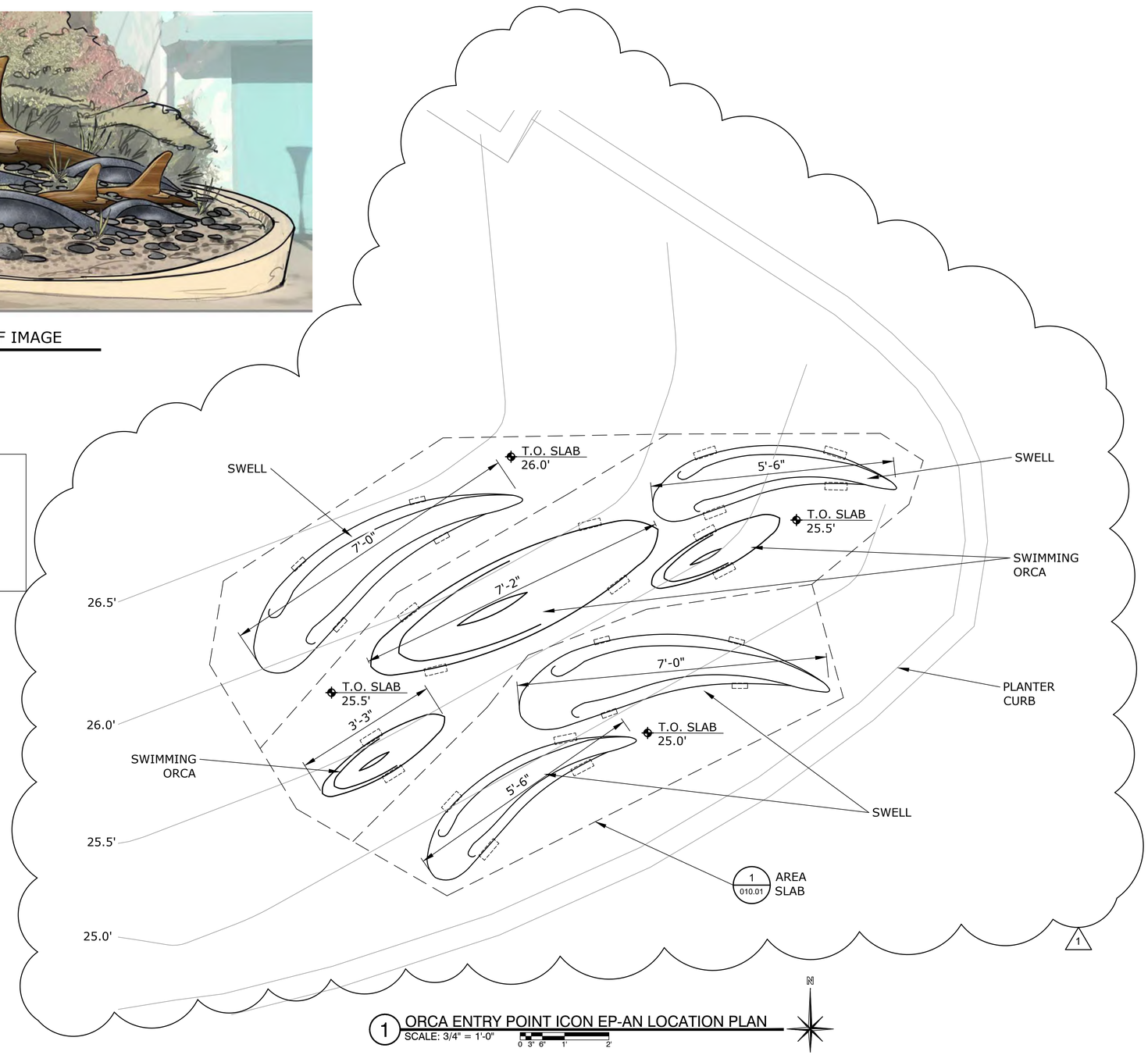

1 ORCA ENTRY POINT ICON EP-AN LOCATION PLAN
SCALE: 3/4" = 1'-0"
0 3" 6" 1' 2'

N

SEAWORLD
SAN DIEGO
REALM ICONS

REV.	DATE	BY	DESCRIPTION
1	12-03-22	JSL	REVISION

This Document contains confidential material and trade secret information belonging exclusively to the client. Any unauthorized use, disclosure, dissemination or duplication of the information contained herein may result in liability under applicable laws.

nassal™
ORLANDO • LOS ANGELES
www.builtbynassal.com

Drawn By: JSL
Checked By: MN
Date: 07-07-22
Job Number: 1059
Project: SWSD REALM ICONS
Building/Attraction: PLANTER 3
Drawing Title: ORCA ENTRY POINT ICON EP-A LOCATION PLAN (PLANTER 3)
Part No.
Scale: AS NOTED
Drawing No. 200.01
REV. ----

THESE DRAWINGS MAY NOT BE USED FOR ANY PURPOSE WITHOUT PRIOR WRITTEN CONSENT OF THE NASSAL CO.

J:\9059-02 - SWSD Realm Icons\NASSAL DRAWINGS\SITE PLAN.dwg

NOTE: FULL SIZE DRAWING IS 34 X 22

12/3/2022

ORCA MAIN PLANTER ICON EP-B REF IMAGE

NOTE:
SEE SHEET 020.02 FOR TYPICAL ORCA SWELLS

021.02 FOR SWIMMING ORCAS

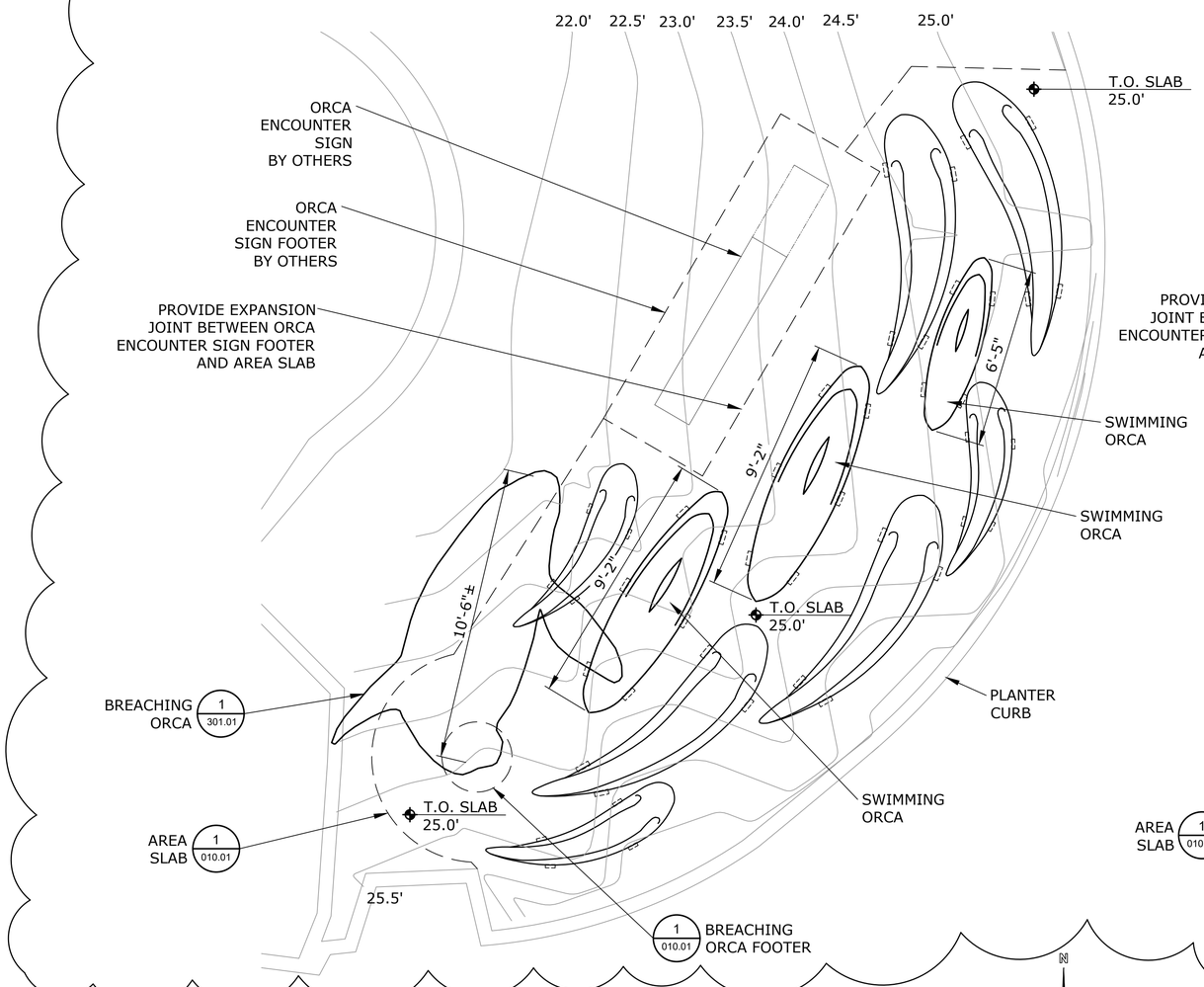

1 ORCA MAIN PLANTER ICON EP-B LOCATION PLAN (ORCAS)
SCALE: 3/8" = 1'-0"
0 6" 1' 2' 4'

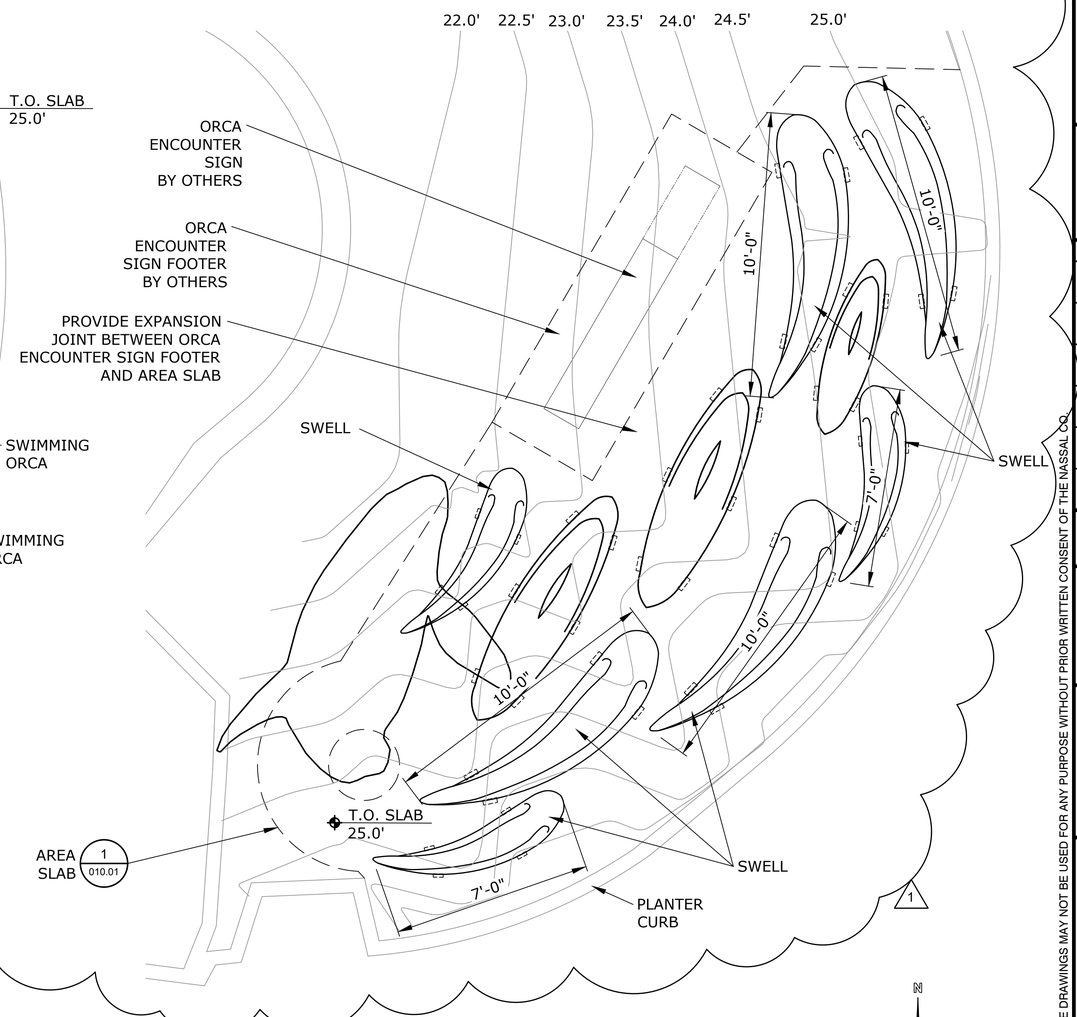

2 ORCA MAIN PLANTER ICON EP-B LOCATION PLAN (SWELLS)
SCALE: 3/8" = 1'-0"
0 6" 1' 2' 4'

SEAWORLD
SAN DIEGO
REALM ICONS

REV.	DATE	BY	DESCRIPTION
1	12-03-22	JSL	REVISION

This Document contains confidential material and trade secret information belonging exclusively to the client. Any unauthorized use, disclosure, dissemination or duplication of the information contained herein may result in liability under applicable laws.

nassal™
ORLANDO • LOS ANGELES
www.builtbynassal.com

Drawn By: JSL
Checked By: MN
Date: 07-07-22
Job Number: 1059
Project: SWSD REALM ICONS
Building/Attraction: PLANTER 2
Drawing Title: ORCA MAIN PLANTER ICON EP-B LOCATION PLAN (PLANTER 2)
Part No.
Scale: AS NOTED
Drawing No. 300.01
REV. ----

THESE DRAWINGS MAY NOT BE USED FOR ANY PURPOSE WITHOUT PRIOR WRITTEN CONSENT OF THE NASSAL CO.

J:\9059-02 - SWSD Realm Icons\NASSAL DRAWINGS\SITE PLAN.dwg

NOTE: FULL SIZE DRAWING IS 34 X 22

12/3/2022

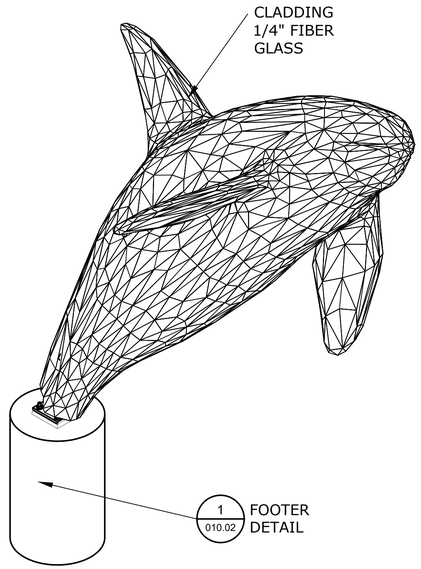

1 BREACHING ORCA ISO
SCALE: NONE

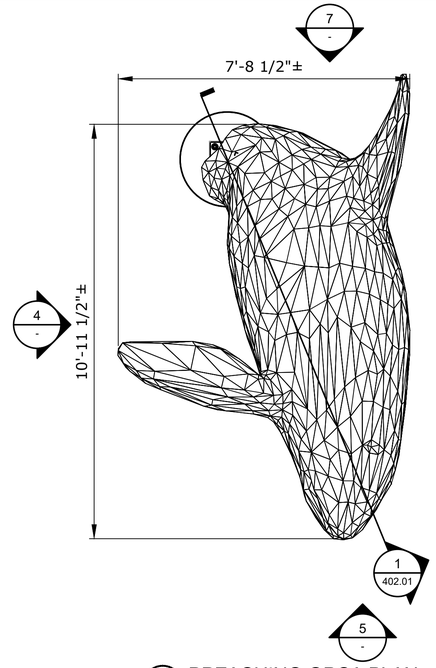

2 BREACHING ORCA PLAN
SCALE: 1/2" = 1'-0"
0 6" 1' 2'

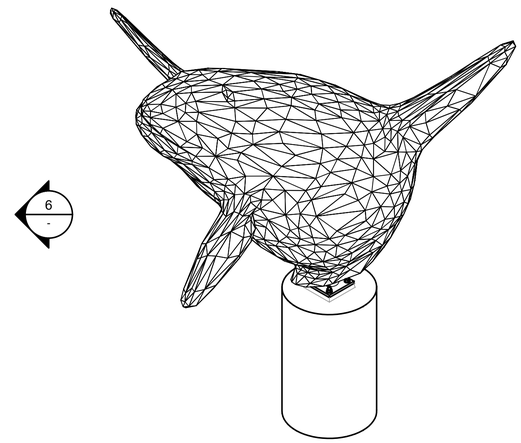

3 BREACHING ORCA ISO
SCALE: NONE

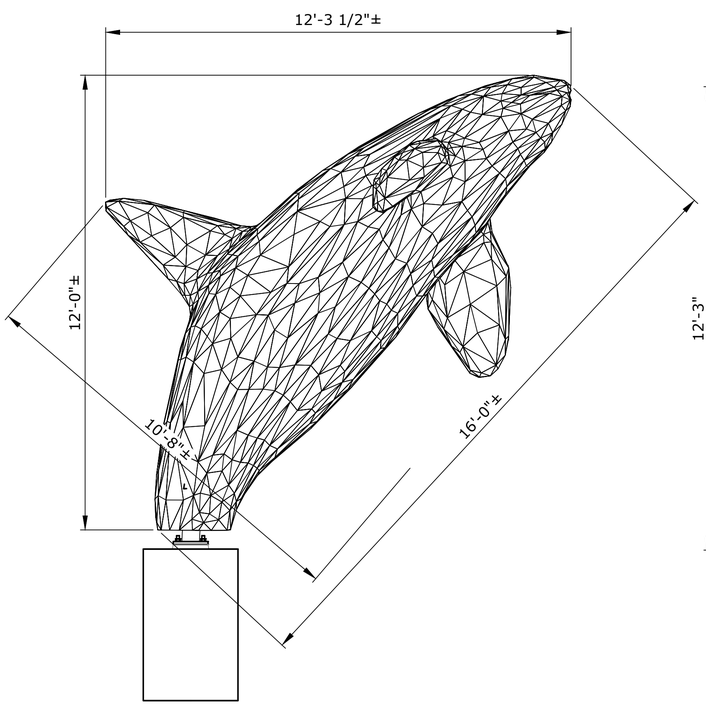

4 BREACHING ORCA ELEVATION
SCALE: 1/2" = 1'-0"
0 6" 1' 2'

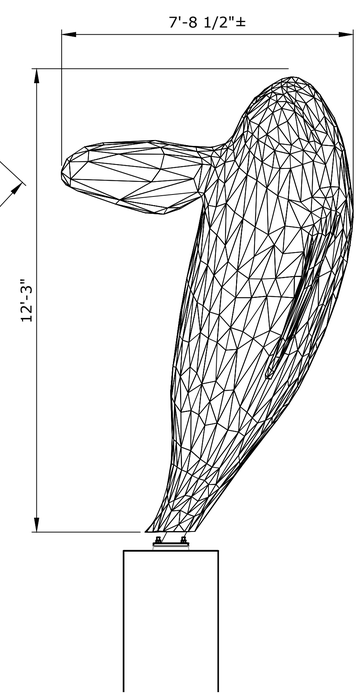

5 BREACHING ORCA ELEVATION
SCALE: 1/2" = 1'-0"
0 6" 1' 2'

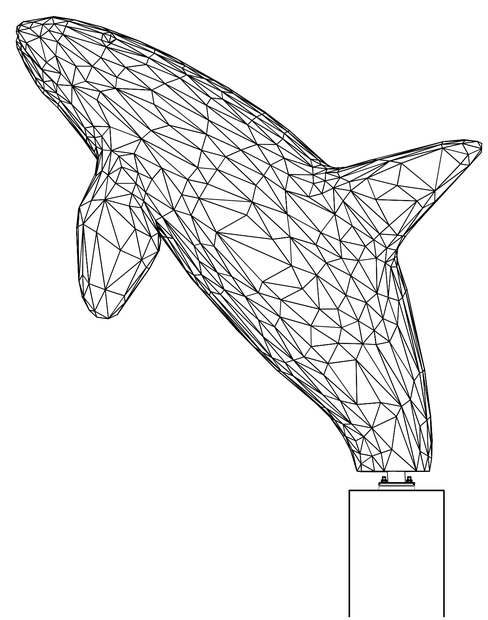

6 BREACHING ORCA ELEVATION
SCALE: 1/2" = 1'-0"
0 6" 1' 2'

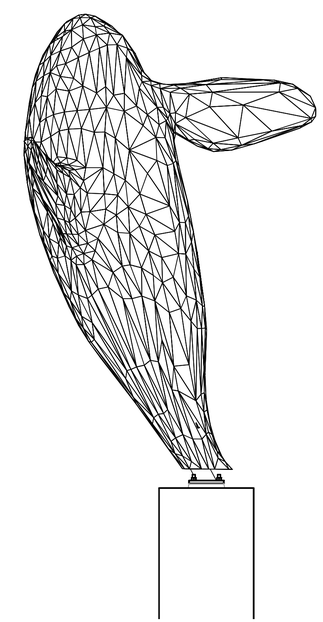

7 BREACHING ORCA ELEVATION
SCALE: 1/2" = 1'-0"
0 6" 1' 2'

SEAWORLD
SAN DIEGO
REALM ICONS

REV.	DATE	BY	DESCRIPTION
△			
△			
△			
△			
△			
△			

This Document contains confidential material and trade secret information belonging exclusively to the client. Any unauthorized use, disclosure, dissemination or duplication of the information contained herein may result in liability under applicable laws.

nassal™
ORLANDO • LOS ANGELES
www.builtbynassal.com

Drawn By: JSL
Checked By: MN
Date: 07-03-22
Job Number: 1059
Project: SWSD REALM ICONS
Building/Attraction: PLANTER 2
Drawing Title: BREACHING ORCA ISOS PLAN AND ELEVATIONS
Part No.
Scale: AS NOTED
Drawing No. 301.01
REV. ----

THESE DRAWINGS MAY NOT BE USED FOR ANY PURPOSE WITHOUT PRIOR WRITTEN CONSENT OF THE NASSAL CO.

J:\9059-02 - SWSD Realm Icons\NASSAL DRAWINGS\BREACHING ORCA.dwg

NOTE: FULL SIZE DRAWING IS 34 X 22

12/3/2022

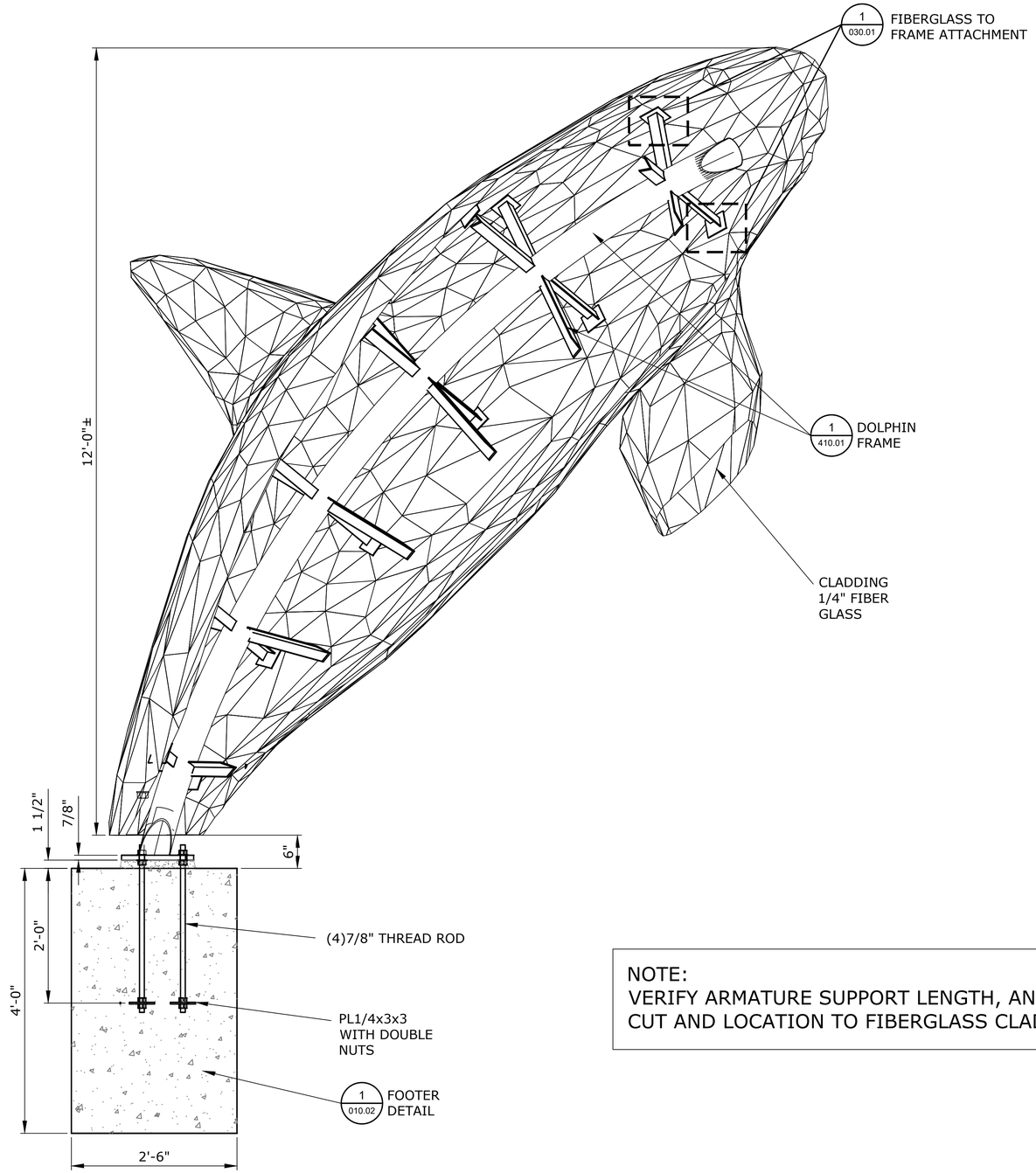

1 BREACHING ORCA SECTION
SCALE: 1" = 1'-0"
0 3" 6" 1'

NOTE:
VERIFY ARMATURE SUPPORT LENGTH, ANGLE CUT AND LOCATION TO FIBERGLASS CLADDING

SEAWORLD
SAN DIEGO
REALM ICONS

REV.	DATE	BY	DESCRIPTION
△			
△			
△			
△			
△			
△			

This Document contains confidential material and trade secret information belonging exclusively to the client. Any unauthorized use, disclosure, dissemination or duplication of the information contained herein may result in liability under applicable laws.

nassal™
ORLANDO • LOS ANGELES
www.builtbynassal.com

Drawn By: JSL
Checked By: MN
Date: 07-03-22
Job Number: 1059
Project: SWSD REALM ICONS
Building/Attraction: PLANTER 2
Drawing Title: BREACHING ORCA SECTION
Part No.
Scale: AS NOTED
Drawing No. 302.01
REV. ----

THESE DRAWINGS MAY NOT BE USED FOR ANY PURPOSE WITHOUT PRIOR WRITTEN CONSENT OF THE NASSAL CO.

J:\9059-02 - SWSD Realm Icons\NASSAL DRAWINGS\BREACHING ORCA.dwg

NOTE: FULL SIZE DRAWING IS 34 X 22

12/3/2022

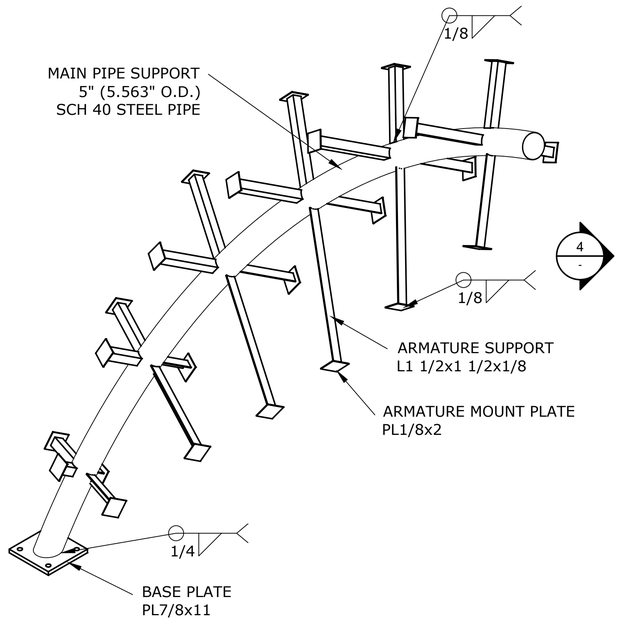

1 BREACHING ORCA FRAME ISO
SCALE: NONE

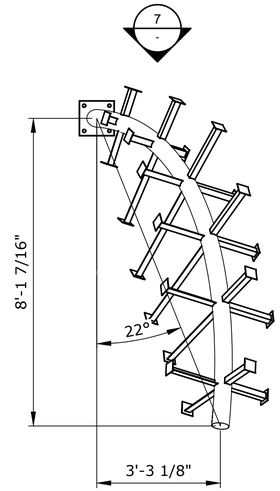

2 BREACHING ORCA FRAME PLAN
SCALE: 1/2" = 1'-0"

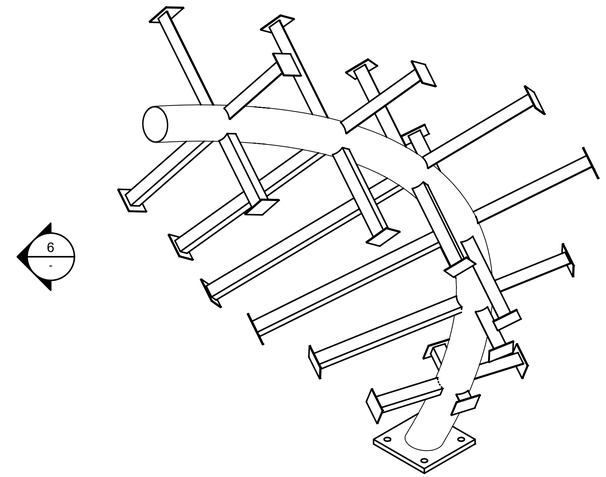

3 BREACHING ORCA FRAME ISO
SCALE: NONE

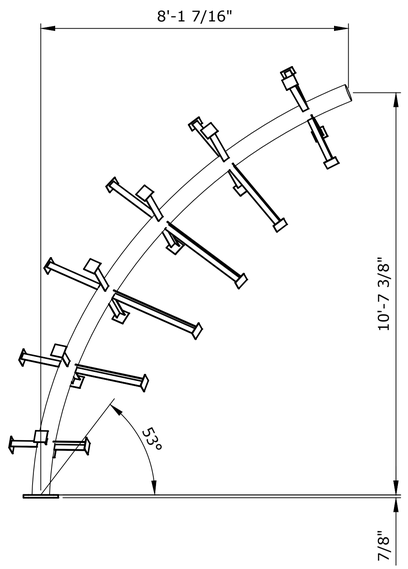

4 BREACHING ORCA FRAME ELEVATION
SCALE: 1/2" = 1'-0"

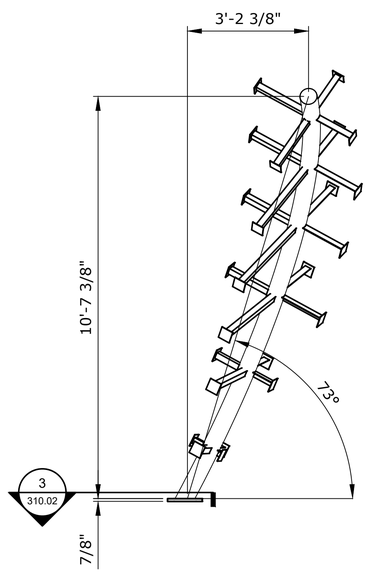

5 BREACHING ORCA FRAME ELEVATION
SCALE: 1/2" = 1'-0"

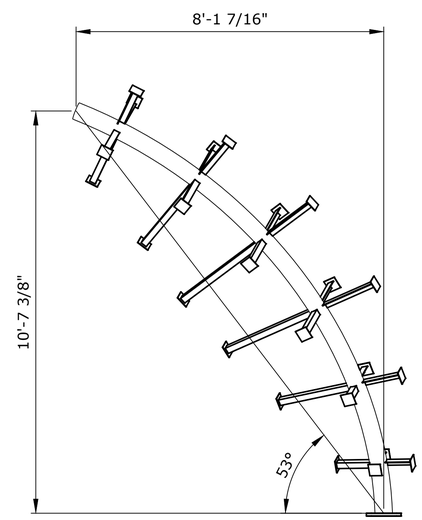

6 BREACHING ORCA FRAME ELEVATION
SCALE: 1/2" = 1'-0"

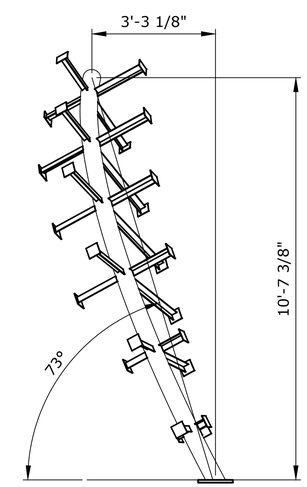

7 BREACHING ORCA FRAME ELEVATION
SCALE: 1/2" = 1'-0"

NOTE:
VERIFY ARMATURE SUPPORT LENGTH, ANGLE CUT AND LOCATION TO FIBERGLASS CLADDING

SEAWORLD
SAN DIEGO
REALM ICONS

REV.	DATE	BY	DESCRIPTION
△			
△			
△			
△			
△			
△			

This Document contains confidential material and trade secret information belonging exclusively to the client. Any unauthorized use, disclosure, dissemination or duplication of the information contained herein may result in liability under applicable laws.

nassal™
ORLANDO • LOS ANGELES
www.builtbynassal.com

Drawn By: JSL
Checked By: MN
Date: 07-03-22
Job Number: 1059
Project: SWSD REALM ICONS
Building/Attraction: PLANTER 2
Drawing Title: BREACHING ORCA FRAME
Part No.
Scale: AS NOTED
Drawing No. 310.01
REV. ----

THESE DRAWINGS MAY NOT BE USED FOR ANY PURPOSE WITHOUT PRIOR WRITTEN CONSENT OF THE NASSAL CO.

J:\9059-02 - SWSD Realm Icons\NASSAL DRAWINGS\BREACHING ORCA.dwg

NOTE: FULL SIZE DRAWING IS 34 X 22

12/3/2022

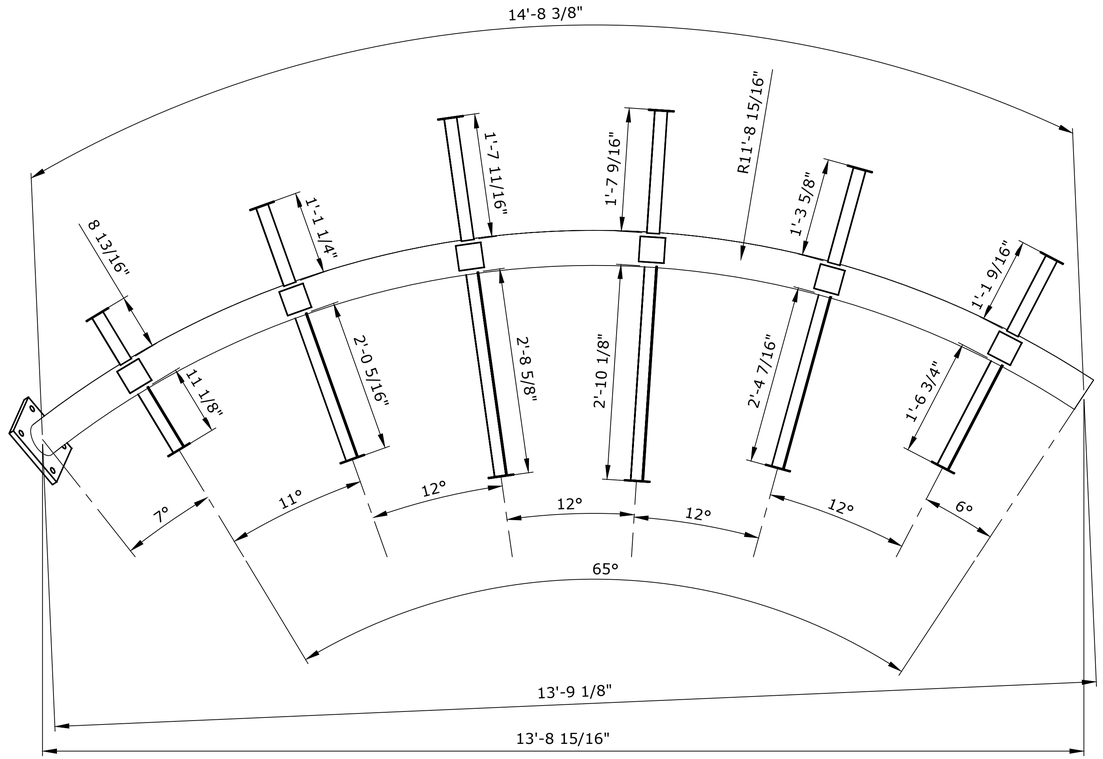

1 BREACHING ORCA FRAME ELEVATION
SCALE: 1" = 1'-0"

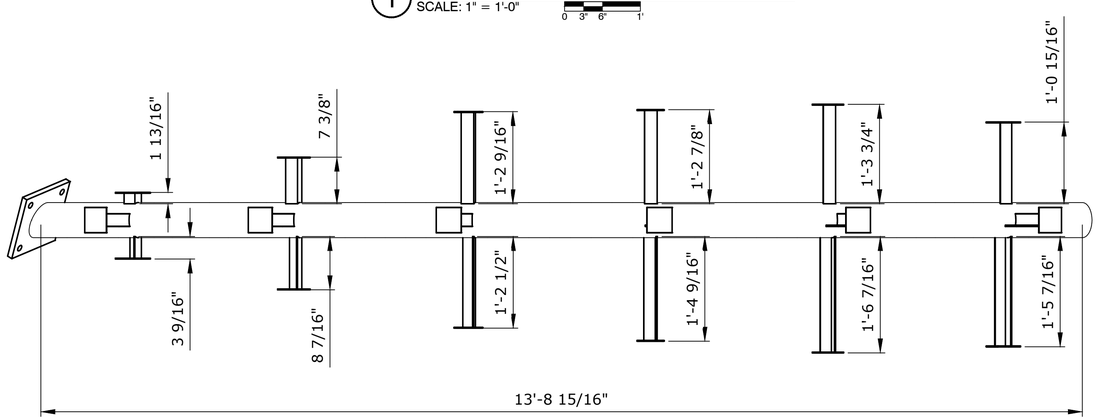

2 BREACHING ORCA FRAME ELEVATION
SCALE: 1" = 1'-0"

NOTE:
VERIFY ARMATURE SUPPORT LENGTH, ANGLE CUT AND LOCATION TO FIBERGLASS CLADDING

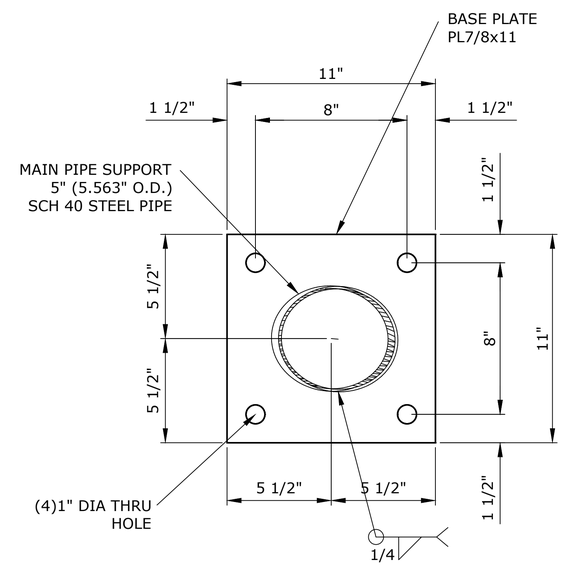

3 BREACHING ORCA FRAME DETAIL
SCALE: 1 1/2" = 1'-0"

SEAWORLD
SAN DIEGO
REALM ICONS

REV.	DATE	BY	DESCRIPTION
△			
△			
△			
△			
△			
△			

This Document contains confidential material and trade secret information belonging exclusively to the client. Any unauthorized use, disclosure, dissemination or duplication of the information contained herein may result in liability under applicable laws.

nassal™
ORLANDO • LOS ANGELES
www.builtbynassal.com

Drawn By: JSL
Checked By: MN
Date: 07-03-22
Job Number: 1059
Project: SWSD REALM ICONS
Building/Attraction: PLANTER 2
Drawing Title: BREACHING ORCA FRAME
Part No.
Scale: AS NOTED
Drawing No. 310.02
REV. ----

THESE DRAWINGS MAY NOT BE USED FOR ANY PURPOSE WITHOUT PRIOR WRITTEN CONSENT OF THE NASSAL CO.

J:\9059-02 - SWSD Realm Icons\NASSAL DRAWINGS\BREACHING ORCA.dwg

NOTE: FULL SIZE DRAWING IS 34 X 22

12/3/2022

DOLPHIN CENTRAL PLANTER ICON DP-A REF IMAGE

NOTE:
SEE SHEET 020.01 FOR TYPICAL DOLPHIN SWELLS

021.01 FOR SWIMMING DOLPHINS

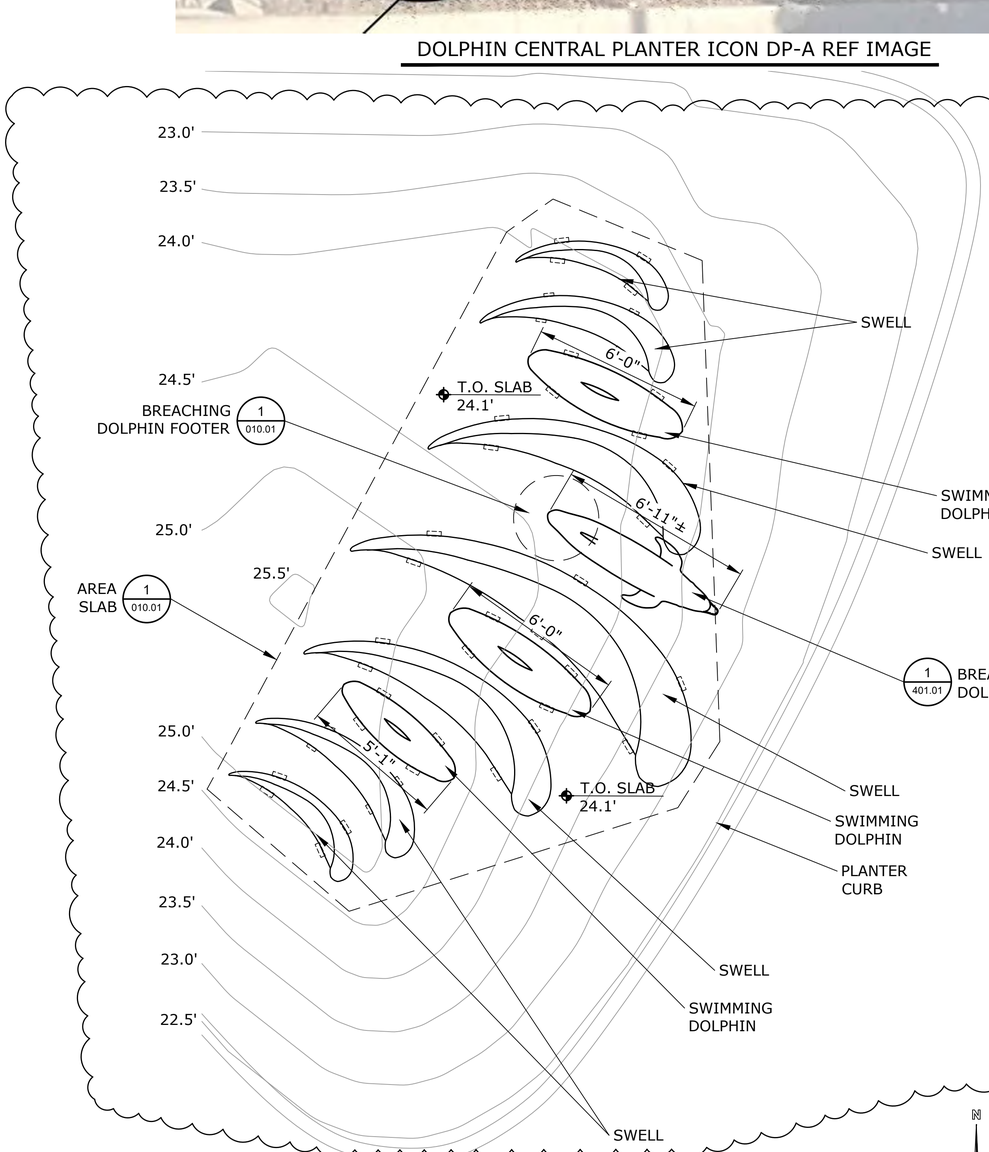

1 DOLPHIN CENTRAL PLANTER ICON DP-A LOCATION PLAN (DOLPHINS)
SCALE: 3/8" = 1'-0"
0 6" 1' 2' 4'

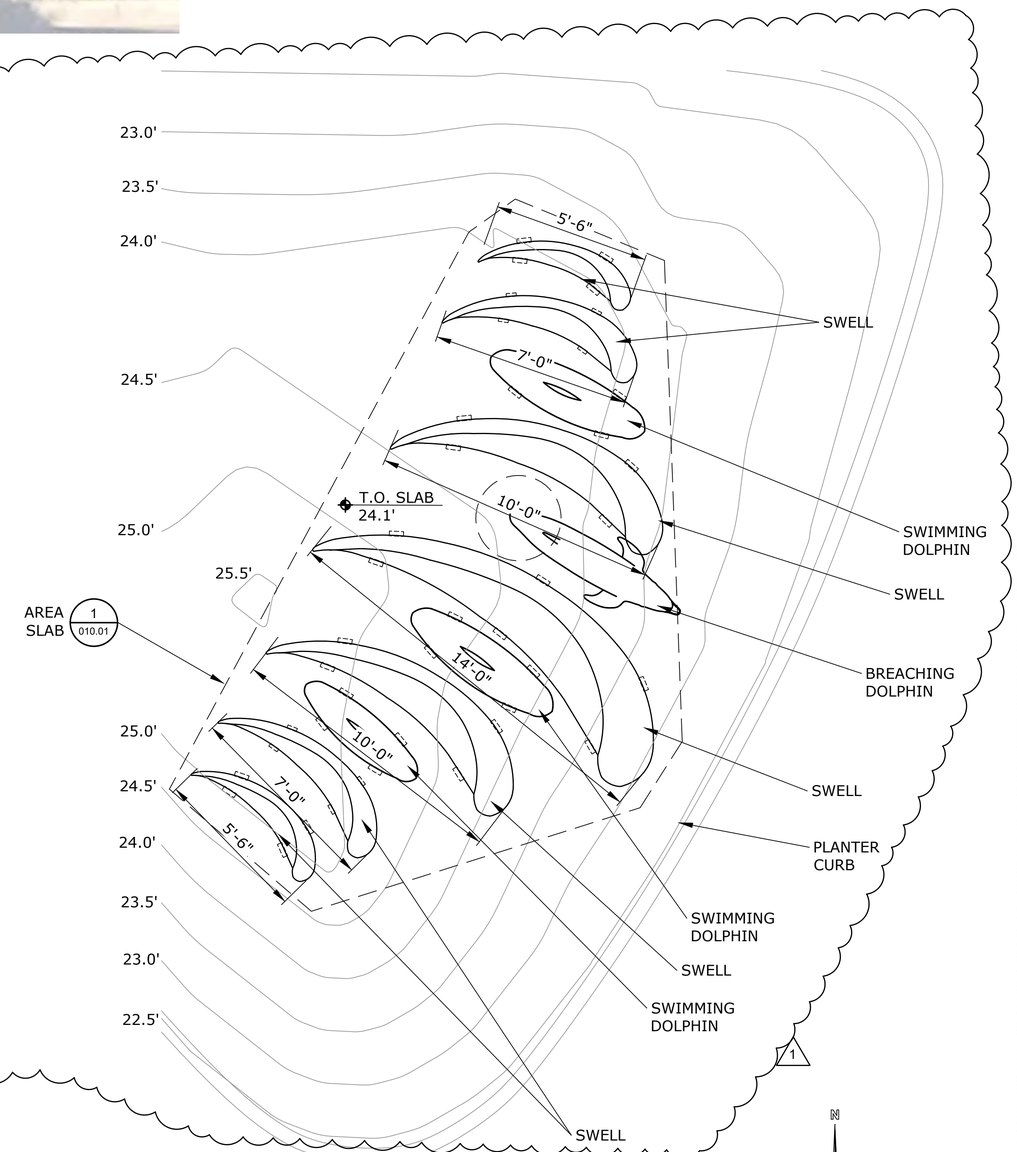

2 DOLPHIN CENTRAL PLANTER ICON DP-A LOCATION PLAN (SWELLS)
SCALE: 3/8" = 1'-0"
0 6" 1' 2' 4'

SEAWORLD
SAN DIEGO
REALM ICONS

REV.	DATE	BY	DESCRIPTION
1	12-03-22	JSL	REVISION

This Document contains confidential material and trade secret information belonging exclusively to the client. Any unauthorized use, disclosure, dissemination or duplication of the information contained herein may result in liability under applicable laws.

nassal™
ORLANDO • LOS ANGELES
www.builtbynassal.com

Drawn By: JSL
Checked By: MN
Date: 07-07-22
Job Number: 1059
Project: SWSD REALM ICONS
Building/Attraction: PLANTER 1
Drawing Title: DOLPHIN CENTRAL PLANTER ICON DP-A LOCATION PLAN (PLANTER 1)
Part No.
Scale: AS NOTED
Drawing No. 400.01
REV. ----

THESE DRAWINGS MAY NOT BE USED FOR ANY PURPOSE WITHOUT PRIOR WRITTEN CONSENT OF THE NASSAL CO.

J:\9059-02 - SWSD Realm Icons\NASSAL DRAWINGS\SITE PLAN.dwg

NOTE: FULL SIZE DRAWING IS 34 X 22

12/3/2022

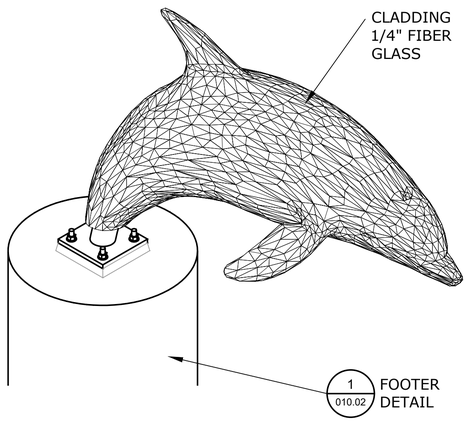

1 BREACHING DOLPHIN ISO
SCALE: NONE

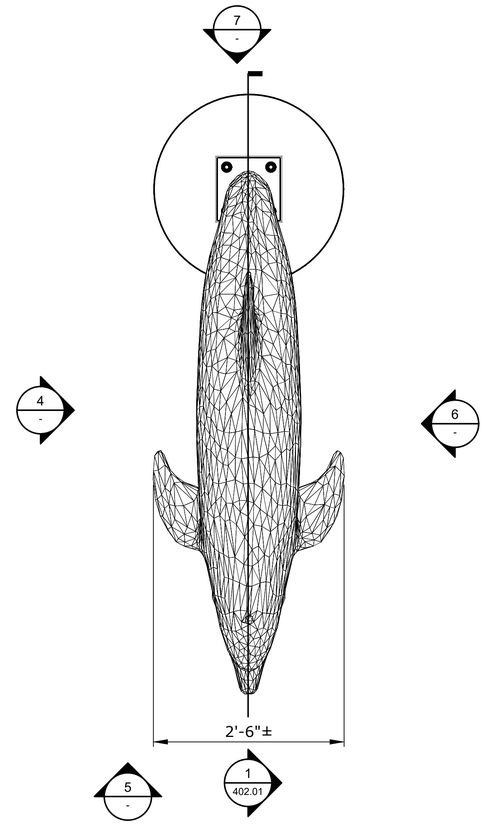

2 BREACHING DOLPHIN PLAN
SCALE: 1" = 1'-0"
0 3" 6" 1'

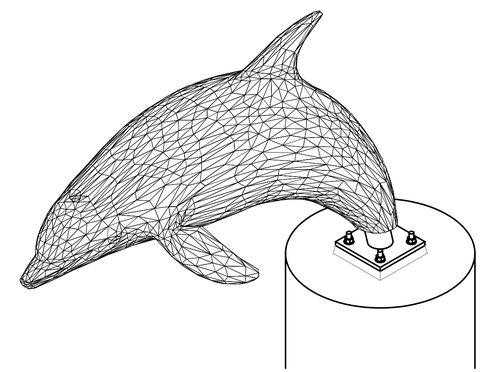

3 BREACHING DOLPHIN ISO
SCALE: NONE

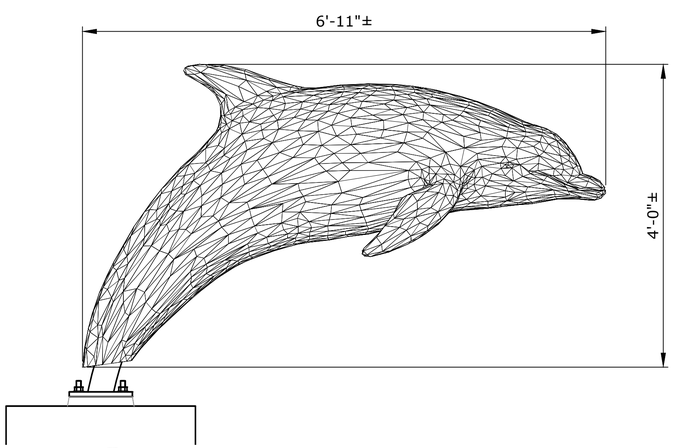

4 BREACHING DOLPHIN ELEVATION
SCALE: 1" = 1'-0"
0 3" 6" 1'

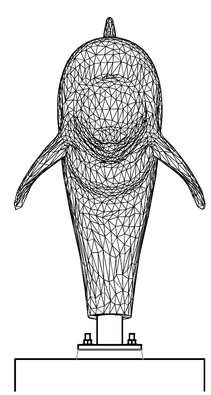

5 BREACHING DOLPHIN ELEVATION
SCALE: 1" = 1'-0"
0 3" 6" 1'

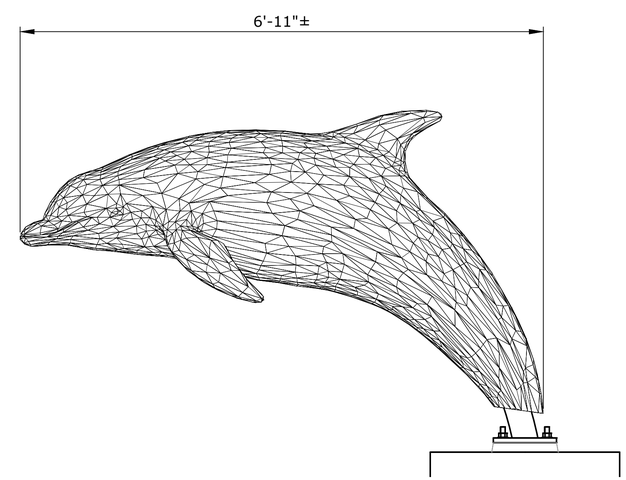

6 BREACHING DOLPHIN ELEVATION
SCALE: 1" = 1'-0"
0 3" 6" 1'

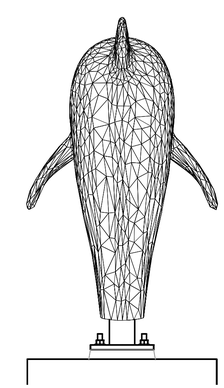

7 BREACHING DOLPHIN ELEVATION
SCALE: 3/4" = 1'-0"
0 3" 6" 1' 2'

SEAWORLD
SAN DIEGO
REALM ICONS

REV.	DATE	BY	DESCRIPTION
△			
△			
△			
△			
△			
△			

This Document contains confidential material and trade secret information belonging exclusively to the client. Any unauthorized use, disclosure, dissemination or duplication of the information contained herein may result in liability under applicable laws.

nassal™
ORLANDO • LOS ANGELES
www.builtbynassal.com

Drawn By: JSL
Checked By: MN
Date: 07-07-22
Job Number: 1059
Project: SWSD REALM ICONS
Building/Attraction: PLANTER 1
Drawing Title: BREACHING DOLPHIN ISOS PLAN AND ELEVATIONS
Part No.
Scale: AS NOTED
Drawing No. 401.01
REV. ----

THESE DRAWINGS MAY NOT BE USED FOR ANY PURPOSE WITHOUT PRIOR WRITTEN CONSENT OF THE NASSAL CO.

J:\9059-02 - SWSD Realm Icons\NASSAL DRAWINGS\BREACHING DOLPHINS.dwg

NOTE: FULL SIZE DRAWING IS 34 X 22

12/3/2022

NOTE:
VERIFY ARMATURE SUPPORT LENGTH, ANGLE CUT AND LOCATION TO FIBERGLASS CLADDING

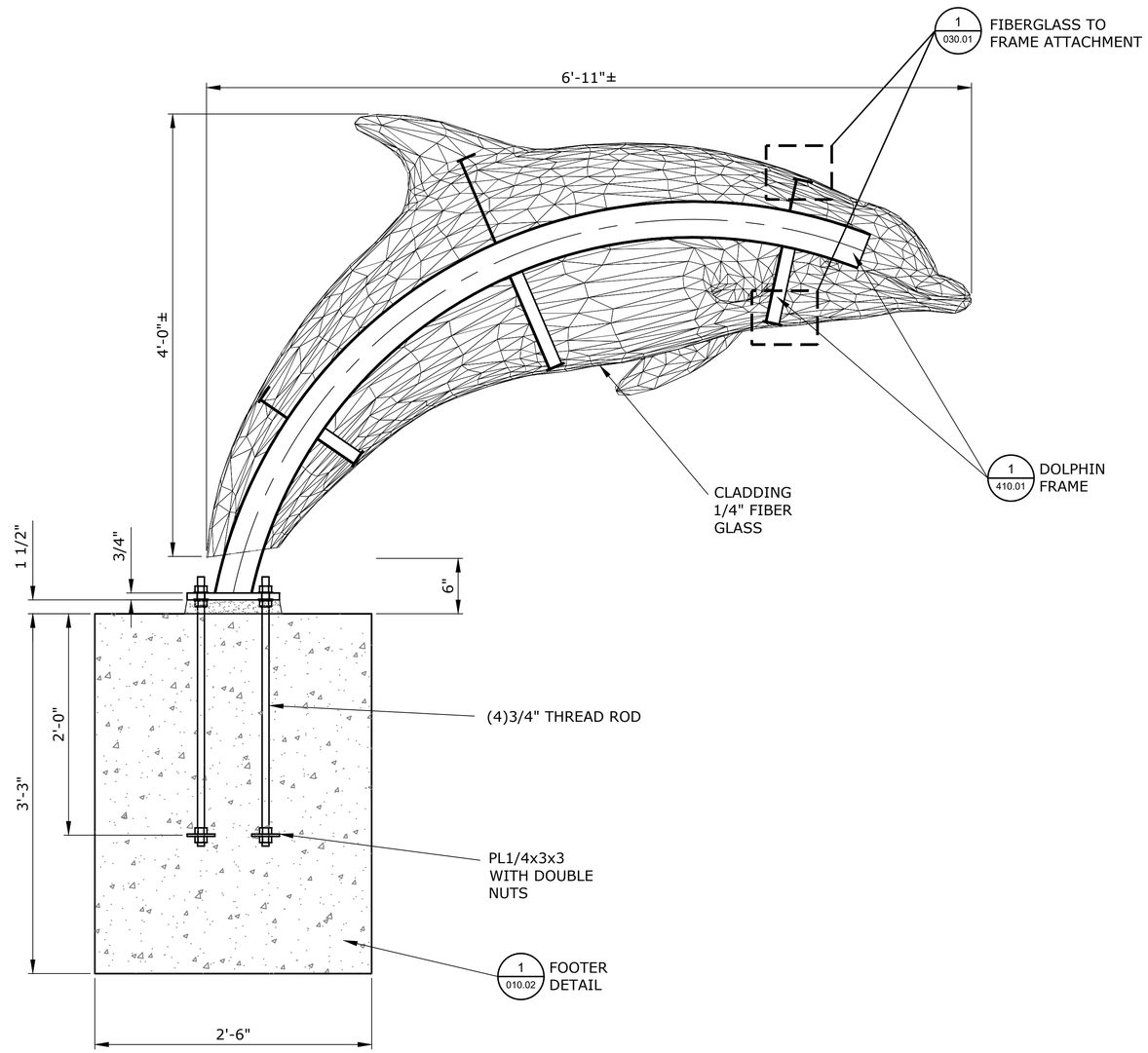

1 BREACHING DOLPHIN SECTION
SCALE: 1" = 1'-0"
0 3" 6" 1'

SEAWORLD
SAN DIEGO
REALM ICONS

REV.	DATE	BY	DESCRIPTION
△			
△			
△			
△			
△			
△			

This Document contains confidential material and trade secret information belonging exclusively to the client. Any unauthorized use, disclosure, dissemination or duplication of the information contained herein may result in liability under applicable laws.

nassal™
ORLANDO • LOS ANGELES
www.builtbynassal.com

Drawn By: JSL
Checked By: MN
Date: 07-07-22
Job Number: 1059
Project: SWSD REALM ICONS
Building/Attraction: PLANTER 1
Drawing Title: BREACHING DOLPHINS SECTIONS
Part No.
Scale: AS NOTED
Drawing No. 402.01
REV. ----

THESE DRAWINGS MAY NOT BE USED FOR ANY PURPOSE WITHOUT PRIOR WRITTEN CONSENT OF THE NASSAL CO.

J:\9059-02 - SWSD Realm Icons\NASSAL DRAWINGS\BREACHING DOLPHINS.dwg

NOTE: FULL SIZE DRAWING IS 34 X 22

12/3/2022

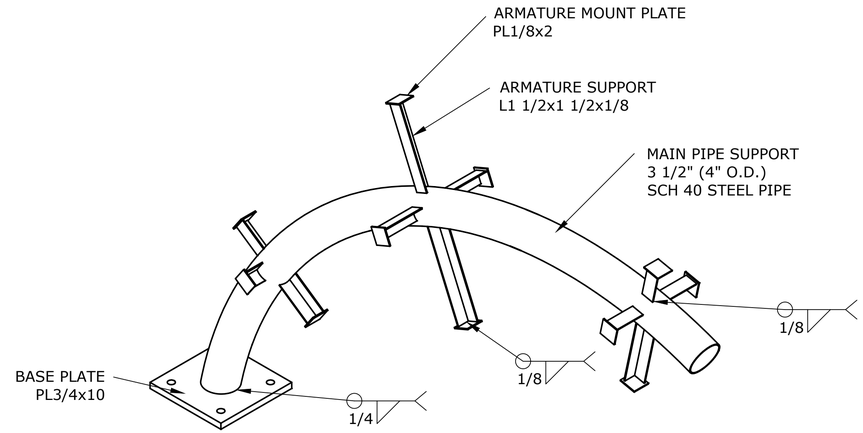

1 BREACHING DOLPHIN FRAME ISO (QTY 2)
SCALE: NONE

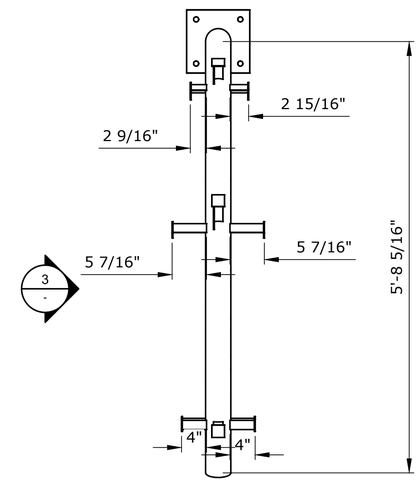

4
-

2 BREACHING DOLPHIN FRAME PLAN
SCALE: 1" = 1'-0"
0 3" 6" 1'

NOTE:
VERIFY ARMATURE SUPPORT LENGTH, ANGLE CUT AND LOCATION TO FIBERGLASS CLADDING

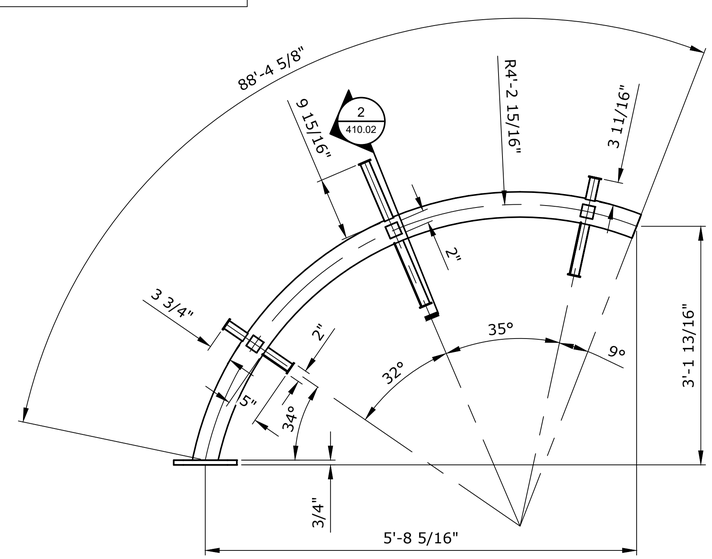

3 BREACHING DOLPHIN FRAME ELEVATION
SCALE: 1" = 1'-0"
0 3" 6" 1'

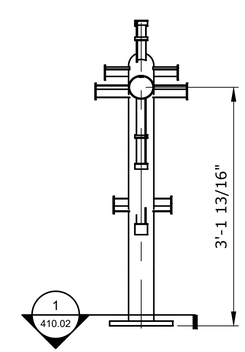

4 BREACHING DOLPHIN FRAME ELEVATION
SCALE: 1" = 1'-0"
0 3" 6" 1'

SEAWORLD
SAN DIEGO
REALM ICONS

REV.	DATE	BY	DESCRIPTION
△			
△			
△			
△			
△			
△			
△			

This Document contains confidential material and trade secret information belonging exclusively to the client. Any unauthorized use, disclosure, dissemination or duplication of the information contained herein may result in liability under applicable laws.

nassal™
ORLANDO • LOS ANGELES
www.builtbynassal.com

Drawn By: JSL
Checked By: MN
Date: 07-07-22
Job Number: 1059
Project: SWSD REALM ICONS
Building/Attraction: PLANTER 1
Drawing Title: BREACHING DOLPHINS FRAME
Part No.
Scale: AS NOTED
Drawing No. 410.01
REV. ----

THESE DRAWINGS MAY NOT BE USED FOR ANY PURPOSE WITHOUT PRIOR WRITTEN CONSENT OF THE NASSAL CO

J:\9059-02 - SWSD Realm Icons\NASSAL DRAWINGS\BREACHING DOLPHINS.dwg

NOTE: FULL SIZE DRAWING IS 34 X 22

12/3/2022

NOTE:
VERIFY ARMATURE SUPPORT LENGTH, ANGLE CUT AND LOCATION TO FIBERGLASS CLADDING

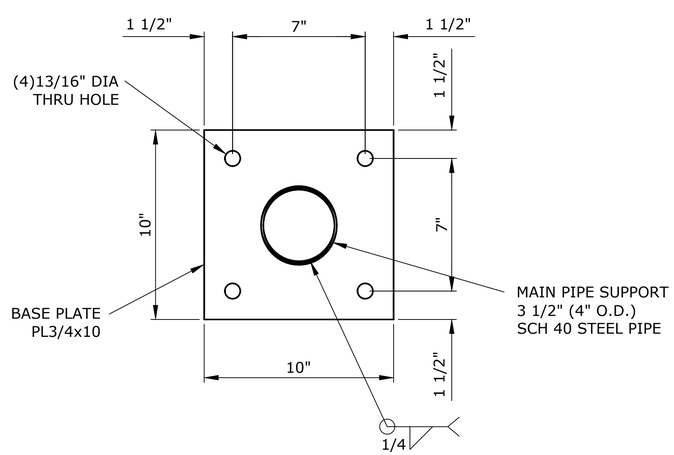

1 BREACHING DOLPHIN FRAME BASE PLATE
SCALE: 3" = 1'-0"

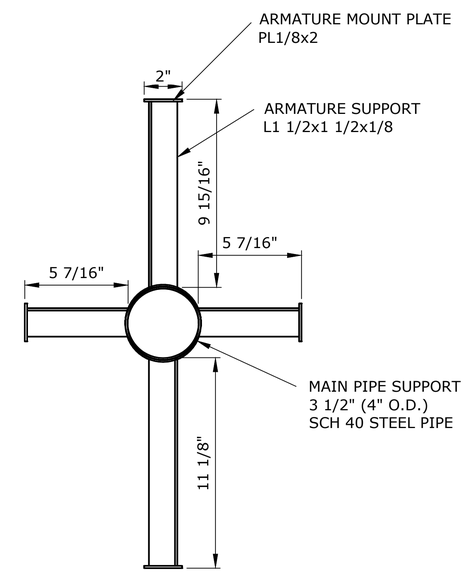

2 BREACHING DOLPHIN DETAIL
SCALE: 3" = 1'-0"

SEAWORLD
SAN DIEGO
REALM ICONS

REV.	DATE	BY	DESCRIPTION

This Document contains confidential material and trade secret information belonging exclusively to the client. Any unauthorized use, disclosure, dissemination or duplication of the information contained herein may result in liability under applicable laws.

nassal™
ORLANDO • LOS ANGELES
www.builtbynassal.com

Drawn By: JSL
Checked By: MN
Date: 07-07-22
Job Number: 1059
Project: SWSD REALM ICONS
Building/Attraction: PLANTER 1
Drawing Title: BREACHING DOLPHINS FRAME
Part No.
Scale: AS NOTED
Drawing No. 410.02
REV. ----

THESE DRAWINGS MAY NOT BE USED FOR ANY PURPOSE WITHOUT PRIOR WRITTEN CONSENT OF THE NASSAL CO.

J:\9059-02 - SWSD Realm Icons\NASSAL DRAWINGS\BREACHING DOLPHINS.dwg

NOTE: FULL SIZE DRAWING IS 34 X 22

12/3/2022

NOTE:
SEE SHEET 020.01 FOR TYPICAL DOLPHIN SWELLS

021.01 FOR SWIMMING DOLPHINS

OCEANS PLAYGROUND DOLPHIN ENTRY ICON PLANTER OP-A REF IMAGE

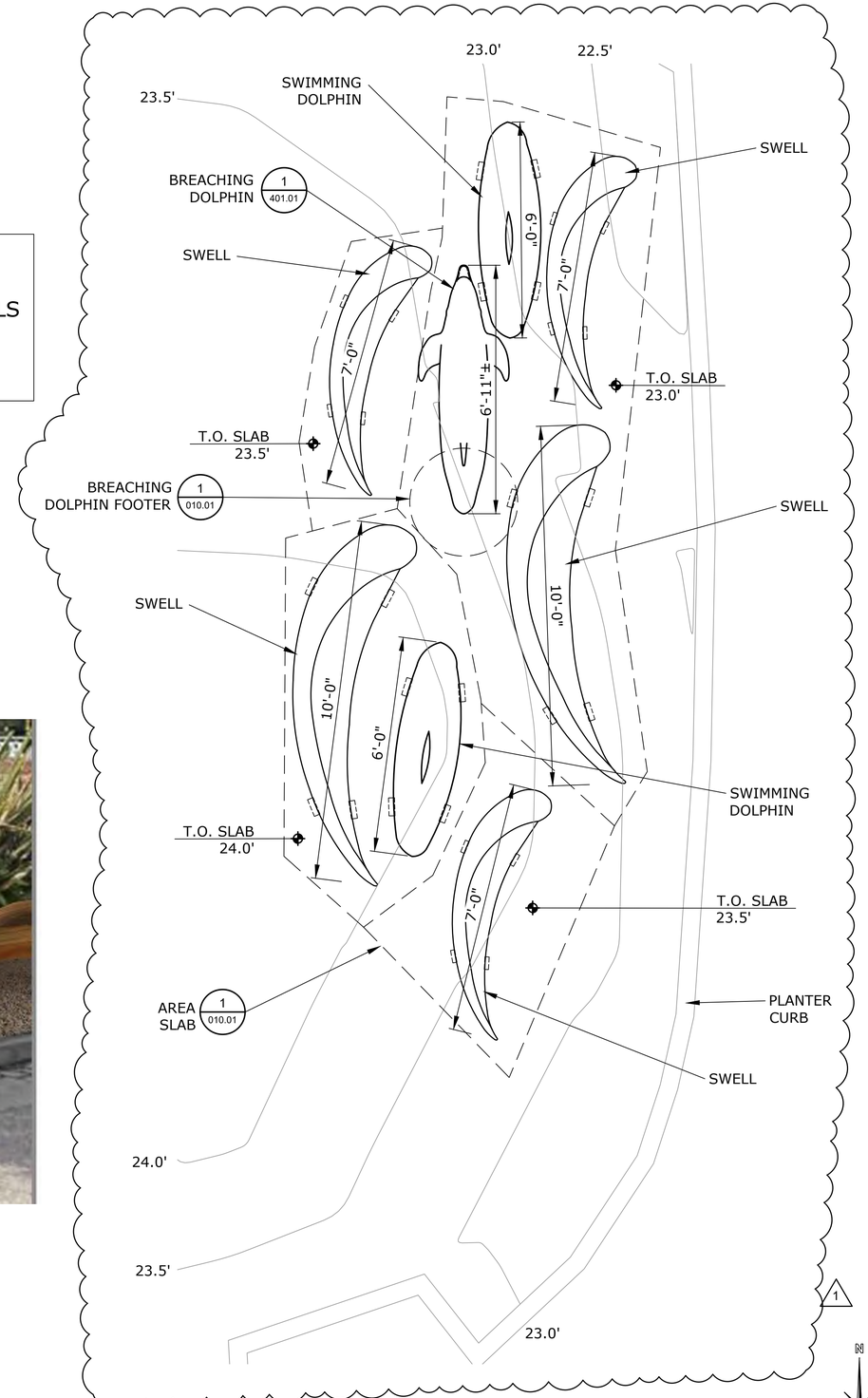

1 OCEANS PLAYGROUND DOLPHIN ENTRY ICON PLANTER OP-A LOCATION PLAN
SCALE: 1/2" = 1'-0"
0 6" 1' 2'

SEAWORLD
SAN DIEGO
REALM ICONS

REV.	DATE	BY	DESCRIPTION
1	12-03-22	JSL	REVISION

This Document contains confidential material and trade secret information belonging exclusively to the client. Any unauthorized use, disclosure, dissemination or duplication of the information contained herein may result in liability under applicable laws.

nassal™
ORLANDO • LOS ANGELES
www.builtbynassal.com

Drawn By: JSL
Checked By: MN
Date: 07-07-22
Job Number: 1059
Project: SWSD REALM ICONS
Building/Attraction: PLANTER 4
Drawing Title: OCEANS PLAYGROUND DOLPHIN ICON OP-A LOCATION PLAN (PLANTER 4)
Part No.
Scale: AS NOTED
Drawing No. 500.01
REV. ----

THESE DRAWINGS MAY NOT BE USED FOR ANY PURPOSE WITHOUT PRIOR WRITTEN CONSENT OF THE NASSAL CO.

J:\9059-02 - SWSD Realm Icons\NASSAL DRAWINGS\SITE PLAN.dwg

NOTE: FULL SIZE DRAWING IS 34 X 22

12/3/2022

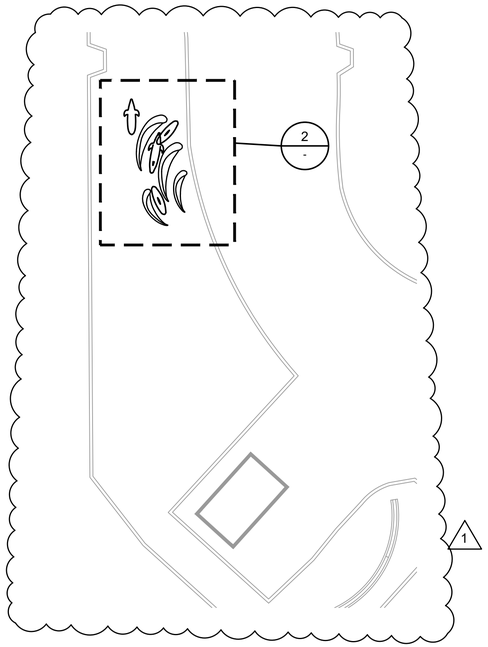

1 DOLPHIN PLANTER ICON OP-B LOCATION PLAN
SCALE: 1/8" = 1'-0"
0 1' 2' 4' 8'

NOTE:
SEE SHEET 020.01 FOR TYPICAL DOLPHIN SWELLS

021.01 FOR SWIMMING DOLPHINS

DOLPHIN PLANTER ICON OP-B REF IMAGE

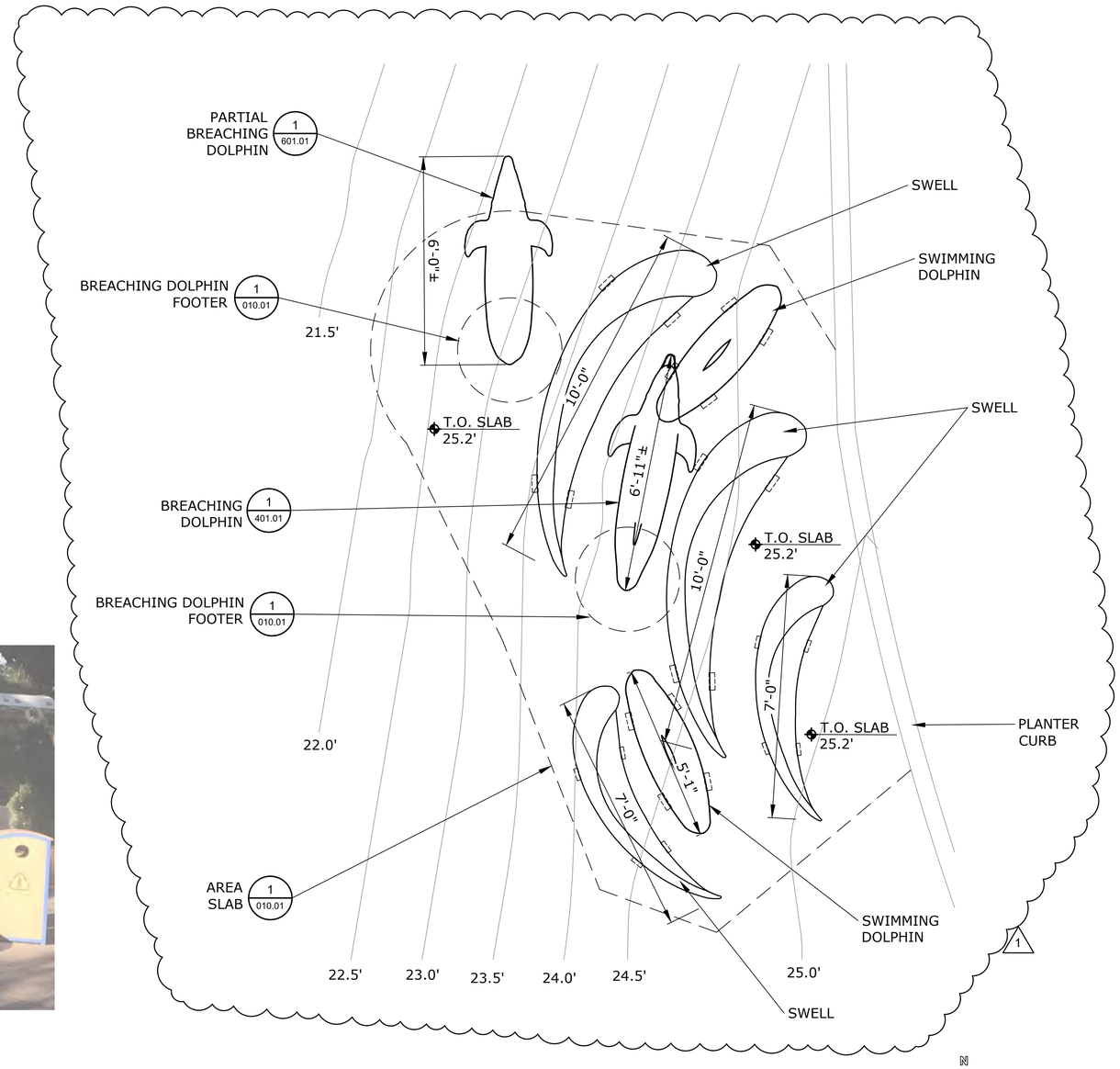

2 DOLPHIN PLANTER ICON OP-B ENLARGED PLAN
SCALE: 1/2" = 1'-0"
0 6" 1' 2'

N

SEAWORLD
SAN DIEGO REALM ICONS

REV.	DATE	BY	DESCRIPTION
1	12-03-22	JSL	REVISION

This Document contains confidential material and trade secret information belonging exclusively to the client. Any unauthorized use, disclosure, dissemination or duplication of the information contained herein may result in liability under applicable laws.

nassal™
ORLANDO • LOS ANGELES
www.builtbynassal.com

Drawn By: JSL
Checked By: MN
Date: 07-07-22
Job Number: 1059
Project: SWSD REALM ICONS
Building/Attraction: PLANTER 5
Drawing Title: DOLPHIN PLANTER ICON OP-B LOCATION PLAN (PLANTER 5)
Part No.
Scale: AS NOTED
Drawing No. 600.01
REV. ----

THESE DRAWINGS MAY NOT BE USED FOR ANY PURPOSE WITHOUT PRIOR WRITTEN CONSENT OF THE NASSAL CO.

J:\9059-02 - SWSD Realm Icons\NASSAL DRAWINGS\SITE PLAN.dwg

NOTE: FULL SIZE DRAWING IS 34 X 22

12/3/2022

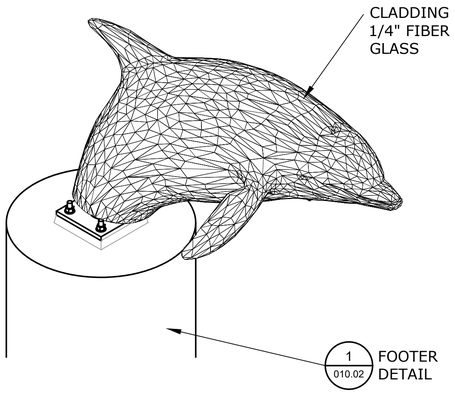

1 PARTIAL PARTIAL BREACHING DOLPHIN ISO
SCALE: NONE

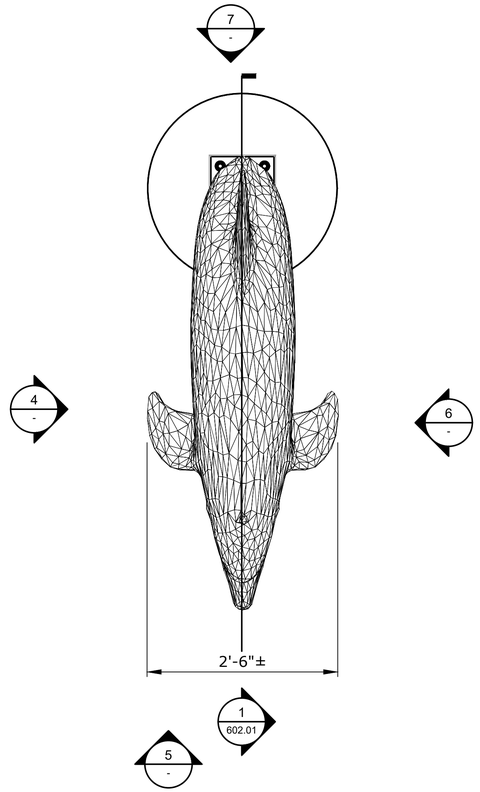

2 PARTIAL BREACHING DOLPHIN PLAN
SCALE: 1" = 1'-0"
0 3" 6" 1'

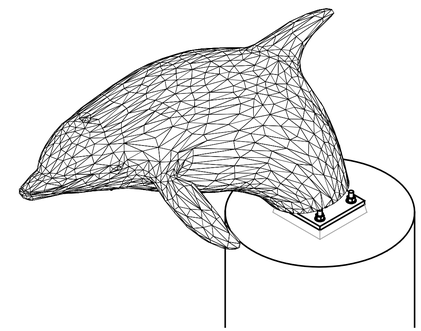

3 PARTIAL BREACHING DOLPHIN ISO
SCALE: NONE

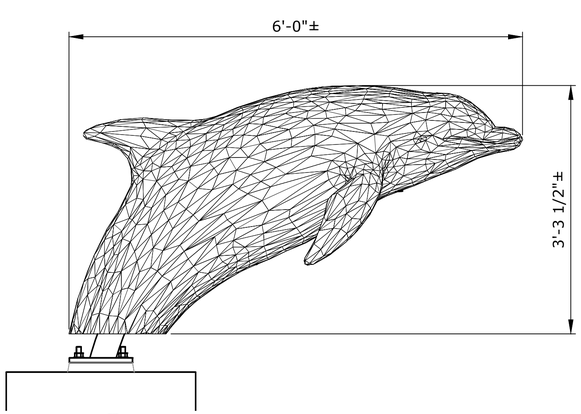

4 PARTIAL BREACHING DOLPHIN ELEVATION
SCALE: 1" = 1'-0"
0 3" 6" 1'

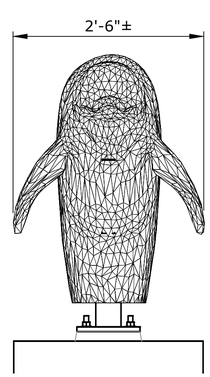

5 PARTIAL BREACHING DOLPHIN ELEVATION
SCALE: 1" = 1'-0"
0 3" 6" 1'

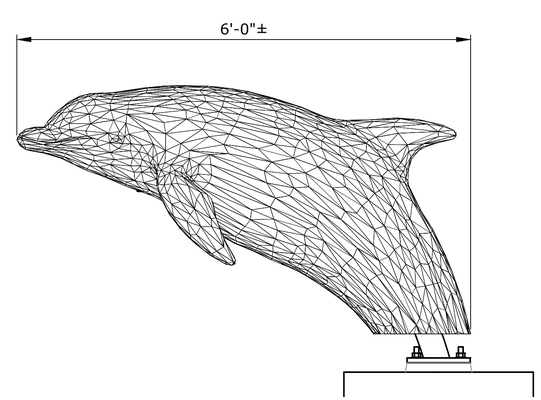

6 PARTIAL BREACHING DOLPHIN ELEVATION
SCALE: 1" = 1'-0"
0 3" 6" 1'

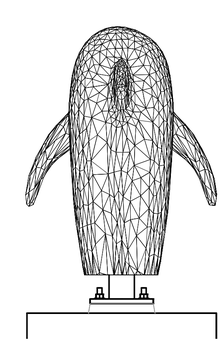

7 PARTIAL BREACHING DOLPHIN ELEVATION
SCALE: 3/4" = 1'-0"
0 3" 6" 1' 2'

SEAWORLD
SAN DIEGO
REALM ICONS

REV.	DATE	BY	DESCRIPTION
△			
△			
△			
△			
△			
△			

This Document contains confidential material and trade secret information belonging exclusively to the client. Any unauthorized use, disclosure, dissemination or duplication of the information contained herein may result in liability under applicable laws.

nassal™
ORLANDO • LOS ANGELES
www.builtbynassal.com

Drawn By: JSL
Checked By: MN
Date: 07-07-22
Job Number: 1059
Project: SWSD REALM ICONS
Building/Attraction: PLANTER 5
Drawing Title: PARTIAL BREACHING DOLPHIN ISOS PLAN AND ELEVATIONS
Part No.
Scale: AS NOTED
Drawing No. 601.01
REV. ----

THESE DRAWINGS MAY NOT BE USED FOR ANY PURPOSE WITHOUT PRIOR WRITTEN CONSENT OF THE NASSAL CO.

J:\9059-02 - SWSD Realm Icons\NASSAL DRAWINGS\PARTIAL BREACHING DOLPHINS.dwg

NOTE: FULL SIZE DRAWING IS 34 X 22

12/3/2022

NOTE:
VERIFY ARMATURE SUPPORT LENGTH, ANGLE CUT AND LOCATION TO FIBERGLASS CLADDING

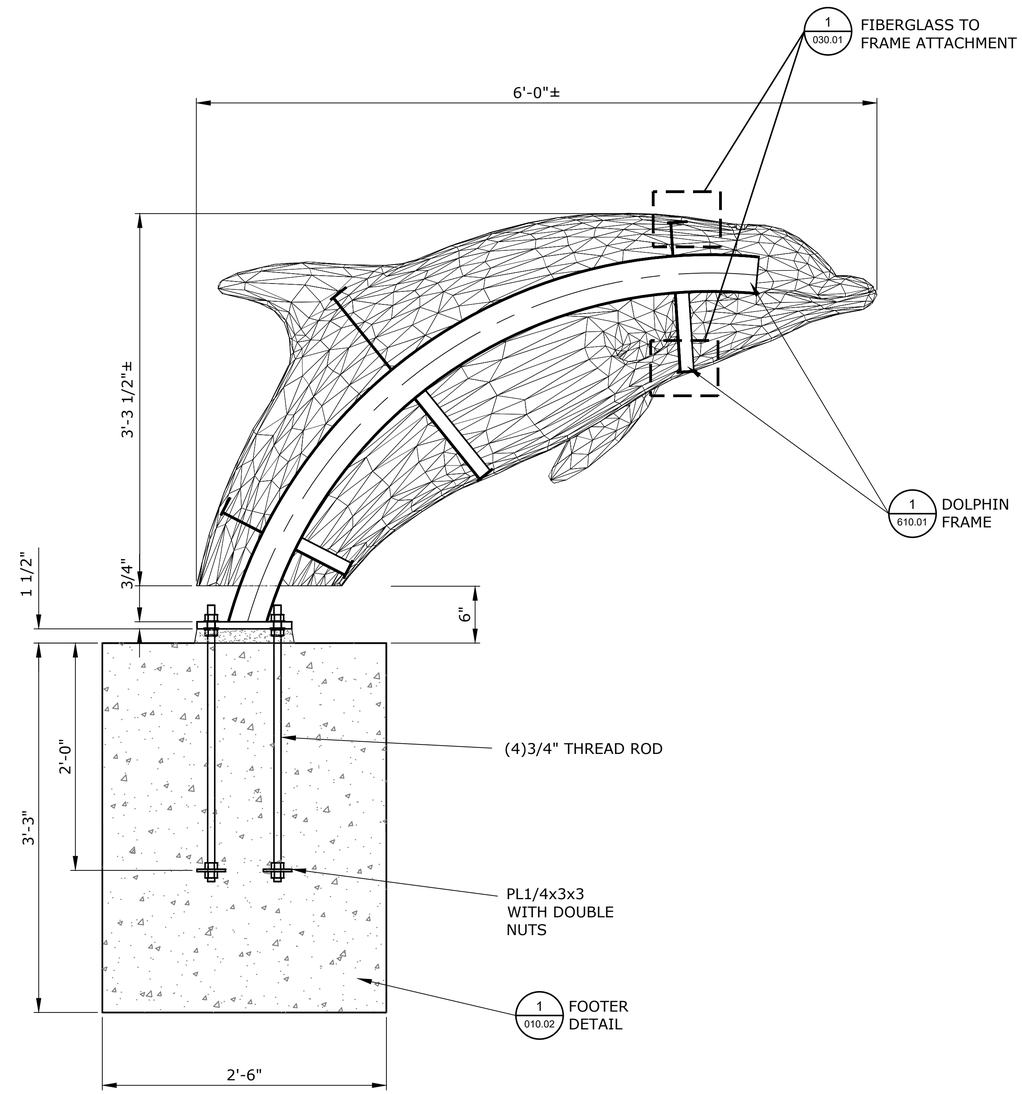

1 PARTIAL BREACHING DOLPHIN SECTION
SCALE: 1" = 1'-0"

J:\9059-02 - SWSD Realm Icons\NASSAL DRAWINGS\PARTIAL BREACHING DOLPHINS.dwg

SEAWORLD
SAN DIEGO
REALM ICONS

REV.	DATE	BY	DESCRIPTION
△			
△			
△			
△			
△			
△			

This Document contains confidential material and trade secret information belonging exclusively to the client. Any unauthorized use, disclosure, dissemination or duplication of the information contained herein may result in liability under applicable laws.

nassal™
ORLANDO • LOS ANGELES
www.builtbynassal.com

Drawn By: JSL
Checked By: MN
Date: 07-07-22
Job Number: 1059
Project: SWSD REALM ICONS
Building/Attraction: PLANTER 5
Drawing Title: PARTIAL BREACHING DOLPHIN SECTION
Part No.
Scale: AS NOTED
Drawing No. 602.01
REV. ----

THESE DRAWINGS MAY NOT BE USED FOR ANY PURPOSE WITHOUT PRIOR WRITTEN CONSENT OF THE NASSAL CO.

NOTE: FULL SIZE DRAWING IS 34 X 22

12/3/2022

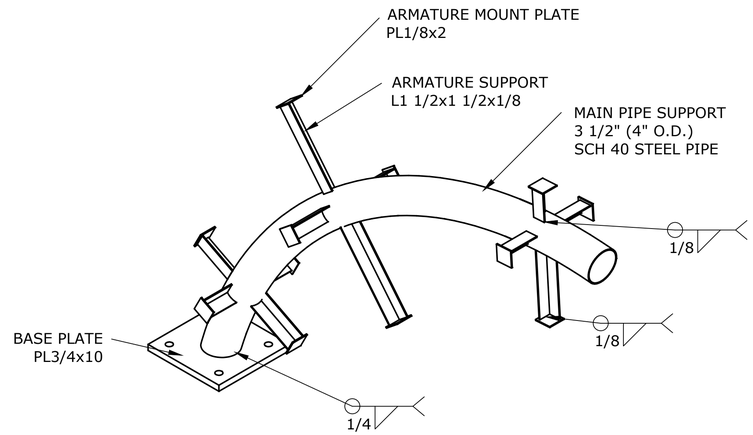

1 PARTIAL BREACHING DOLPHIN FRAME ISO (QTY1)
SCALE: NONE

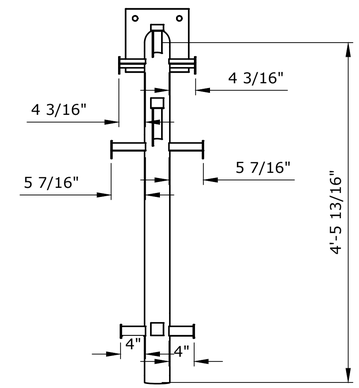

2 PARTIAL BREACHING DOLPHIN FRAME PLAN
SCALE: 1" = 1'-0"

NOTE:
VERIFY ARMATURE SUPPORT LENGTH, ANGLE CUT AND LOCATION TO FIBERGLASS CLADDING

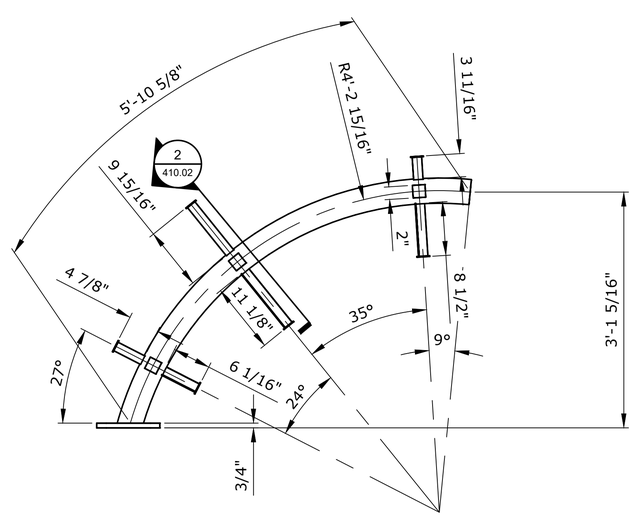

3 PARTIAL BREACHING DOLPHIN FRAME ELEVATION
SCALE: 1" = 1'-0"

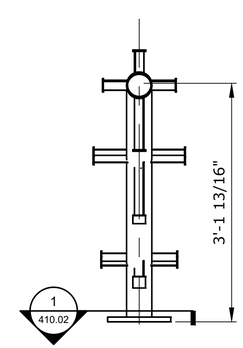

4 PARTIAL BREACHING DOLPHIN FRAME ELEVATION
SCALE: 1" = 1'-0"

SEAWORLD
SAN DIEGO
REALM ICONS

REV.	DATE	BY	DESCRIPTION

This Document contains confidential material and trade secret information belonging exclusively to the client. Any unauthorized use, disclosure, dissemination or duplication of the information contained herein may result in liability under applicable laws.

nassal™
ORLANDO • LOS ANGELES
www.builtbynassal.com

Drawn By: JSL
Checked By: MN
Date: 07-07-22
Job Number: 1059
Project: SWSD REALM ICONS
Building/Attraction: PLANTER 5
Drawing Title: PARTIAL BREACHING DOLPHIN FRAME
Part No.
Scale: AS NOTED
Drawing No. 610.01
REV. ----

THESE DRAWINGS MAY NOT BE USED FOR ANY PURPOSE WITHOUT PRIOR WRITTEN CONSENT OF THE NASSAL CO.

J:\9059-02 - SWSD Realm Icons\NASSAL DRAWINGS\PARTIAL BREACHING DOLPHINS.dwg

NOTE: FULL SIZE DRAWING IS 34 X 22

12/3/2022

REEF EXPLORER ENTRY PORTAL RF-A REF IMAGE

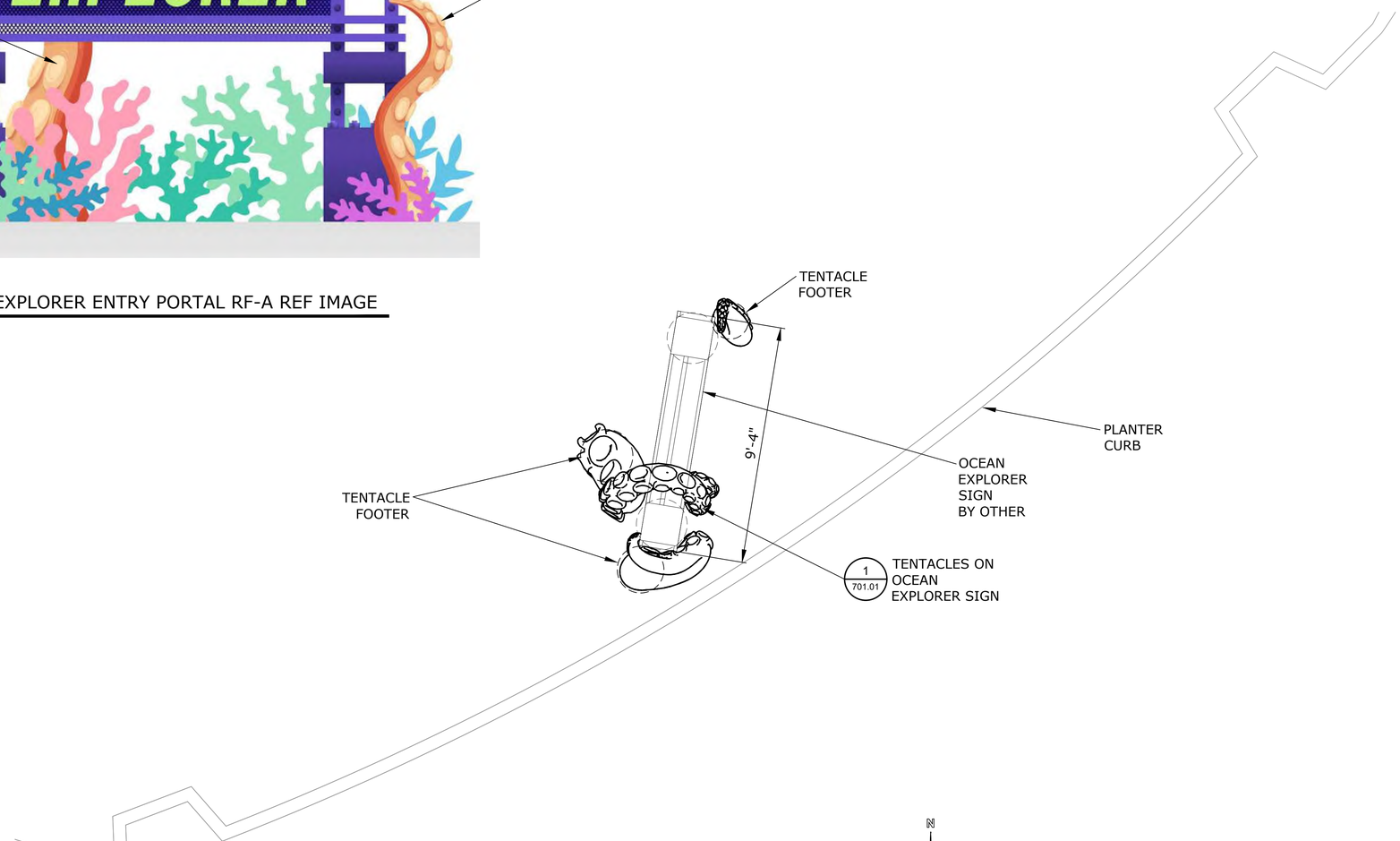

1 REEF EXPLORER ENTRY PORTAL LOCATION RF-A
SCALE: 3/8" = 1'-0"
0 6" 1' 2' 4'

N

J:\9059-02 - SWSD Realm Icons\NASSAL DRAWINGS\SITE PLAN.dwg

SEAWORLD
SAN DIEGO
REALM ICONS

REV.	DATE	BY	DESCRIPTION
△			
△			
△			
△			
△			
△			
△			

This Document contains confidential material and trade secret information belonging exclusively to the client. Any unauthorized use, disclosure, dissemination or duplication of the information contained herein may result in liability under applicable laws.

nassal™
ORLANDO • LOS ANGELES
www.builtbynassal.com

Drawn By: JSL
Checked By: MN
Date: 07-07-22
Job Number: 1059
Project: SWSD REALM ICONS
Building/Attraction: PLANTER 6
Drawing Title: REEF EXPLORER ENTRY PORTAL RF-A LOCATION PLAN (PLANTER 6)
Part No.
Scale: AS NOTED
Drawing No. 700.01
REV. ----

THESE DRAWINGS MAY NOT BE USED FOR ANY PURPOSE WITHOUT PRIOR WRITTEN CONSENT OF THE NASSAL CO.

NOTE: FULL SIZE DRAWING IS 34 X 22

12/3/2022

NOTE:
ACCESS PANEL TO BE LOCATED UNDER TENTACLES SUCTION CUPS IF POSSIBLE.

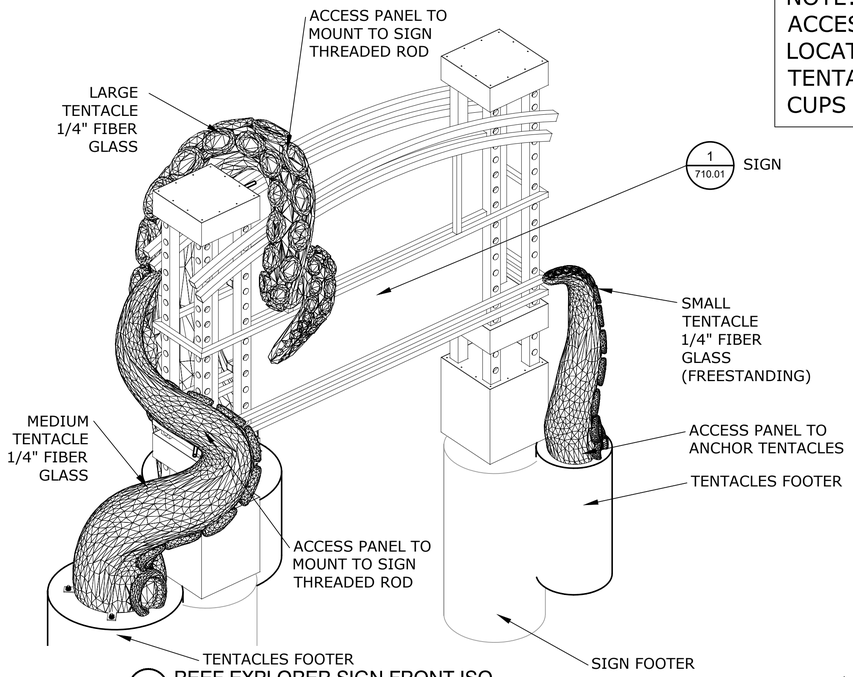

1 REEF EXPLORER SIGN FRONT ISO
SCALE: NONE

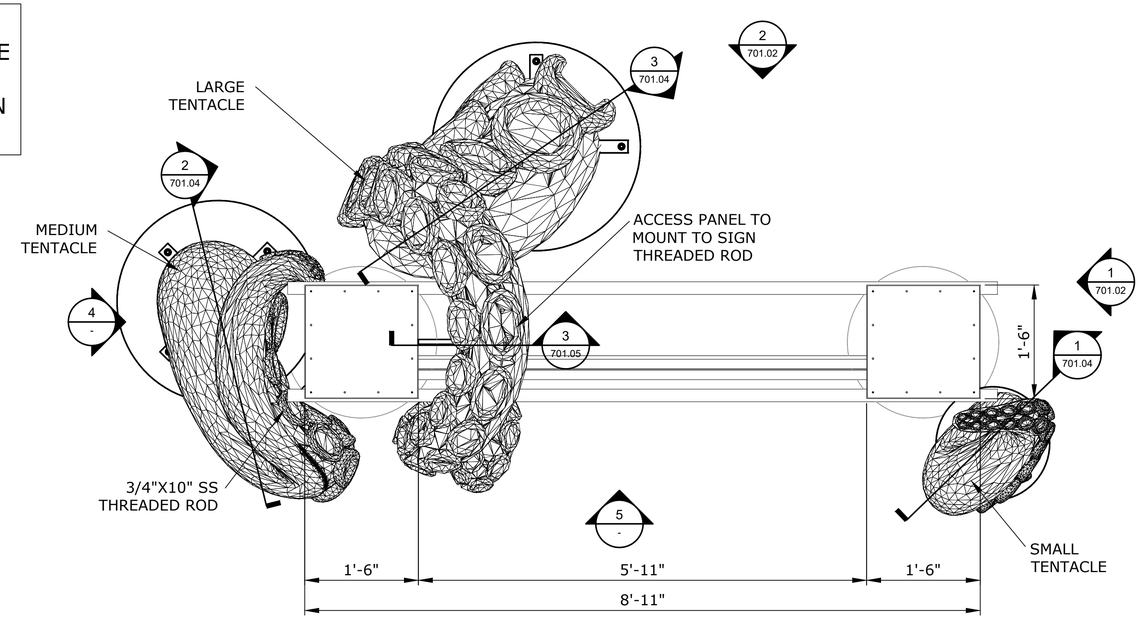

3 REEF EXPLORER SIGN FRONT PLAN
SCALE: 1" = 1'-0"

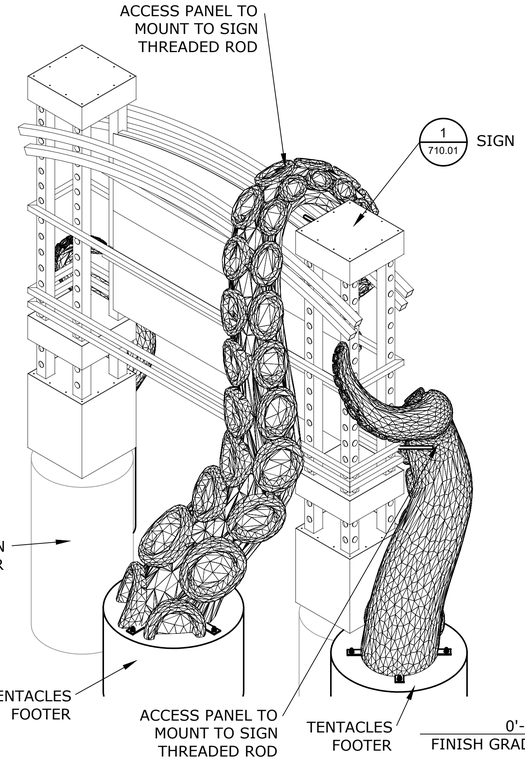

2 REEF EXPLORER SIGN REAR ISO
SCALE: NONE

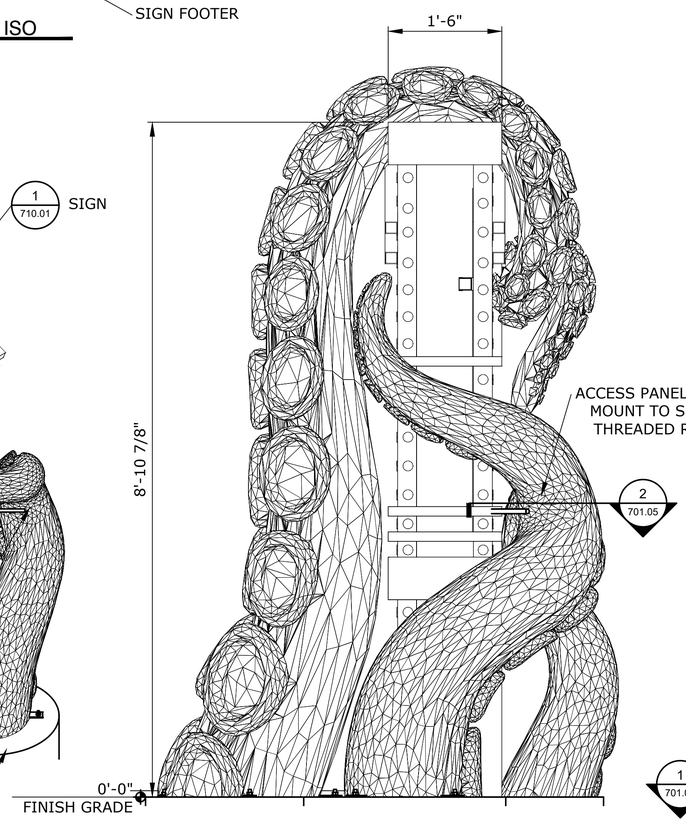

4 REEF EXPLORER SIGN SIDE ELEVATION
SCALE: 1" = 1'-0"

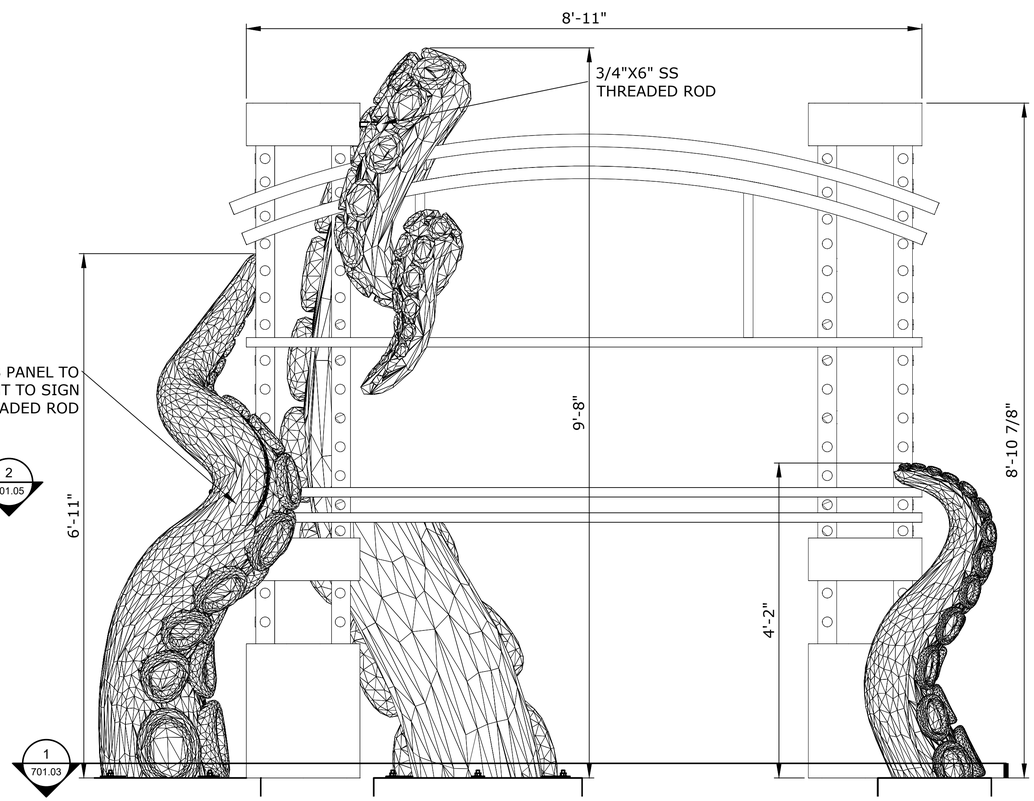

5 REEF EXPLORER SIGN FRONT ELEVATION
SCALE: 1" = 1'-0"

SEAWORLD
SAN DIEGO
REALM ICONS

REV.	DATE	BY	DESCRIPTION
△			
△			
△			
△			
△			
△			

This Document contains confidential material and trade secret information belonging exclusively to the client. Any unauthorized use, disclosure, dissemination or duplication of the information contained herein may result in liability under applicable laws.

nassal™
ORLANDO • LOS ANGELES
www.builtbynassal.com

Drawn By: JSL
Checked By: MN
Date: 07-06-22
Job Number: 1059
Project: SWSD REALM ICONS
Building/Attraction: PLANTER 6
Drawing Title: REEF EXPLORER ENTRY PORTAL RF-A
Part No.
Scale: AS NOTED
Drawing No. 701.01
REV. ----

THESE DRAWINGS MAY NOT BE USED FOR ANY PURPOSE WITHOUT PRIOR WRITTEN CONSENT OF THE NASSAL CO.

J:\9059-02 - SWSD Realm Icons\NASSAL DRAWINGS\REEF EXPLORER ENTRY PORTAL RF-A.dwg

NOTE: FULL SIZE DRAWING IS 34 X 22

12/3/2022

J:\9059-02 - SWSD Realm Icons\NASSAL DRAWINGS\REEF EXPLORER ENTRY PORTAL RF-A.dwg

NOTE:
ACCESS PANEL TO BE LOCATED UNDER TENTACLES SUCTION CUPS IF POSSIBLE.

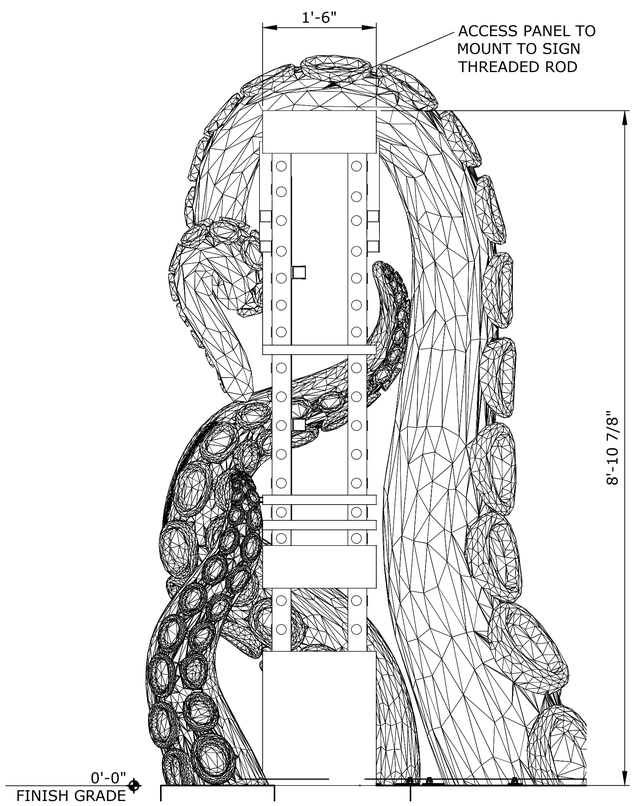

1 REEF EXPLORER SIGN SIDE ELEVATION
SCALE: 1" = 1'-0"
0 3" 6" 1'

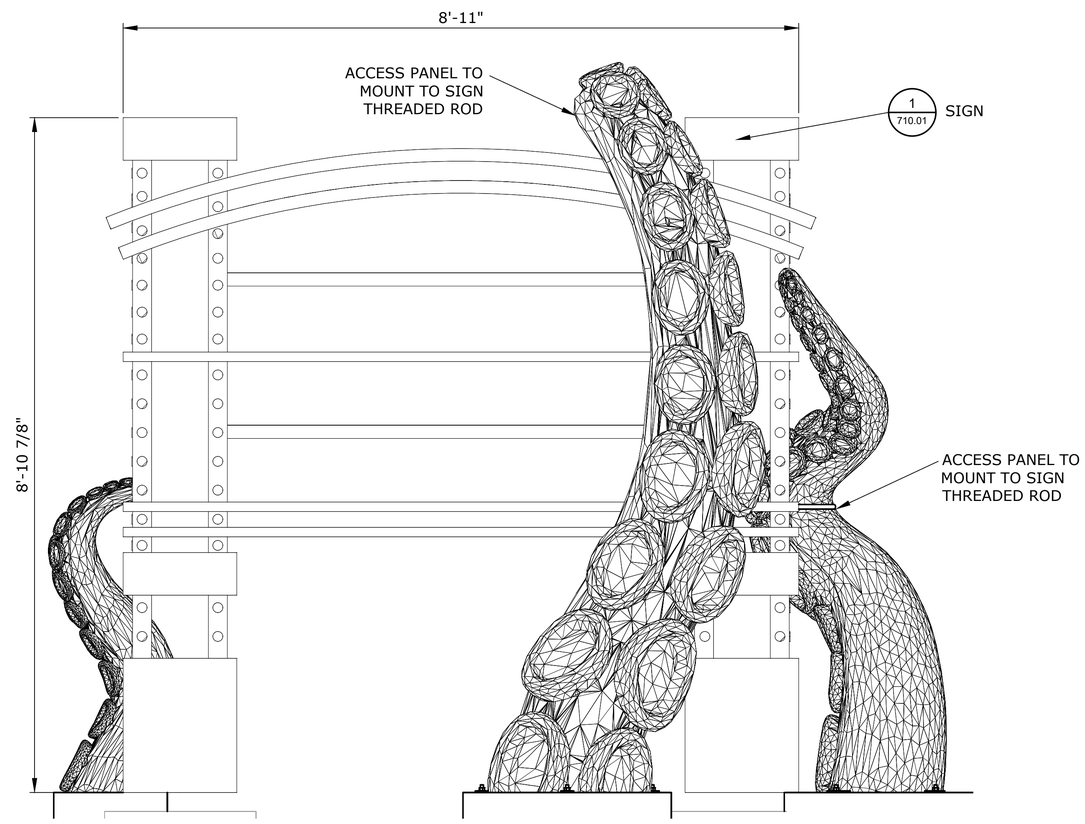

2 REEF EXPLORER SIGN REAR ELEVATION
SCALE: 1" = 1'-0"
0 3" 6" 1'

SEAWORLD
SAN DIEGO
REALM ICONS

REV.	DATE	BY	DESCRIPTION

This Document contains confidential material and trade secret information belonging exclusively to the client. Any unauthorized use, disclosure, dissemination or duplication of the information contained herein may result in liability under applicable laws.

nassal™
ORLANDO • LOS ANGELES
www.builtbynassal.com

Drawn By: JSL
Checked By: MN
Date: 07-06-22
Job Number: 1059
Project: SWSD REALM ICONS
Building/Attraction: PLANTER 6
Drawing Title: REEF EXPLORER ENTRY PORTAL RF-A
Part No.
Scale: AS NOTED
Drawing No. 701.02
REV. ----

THESE DRAWINGS MAY NOT BE USED FOR ANY PURPOSE WITHOUT PRIOR WRITTEN CONSENT OF THE NASSAL CO.

NOTE: FULL SIZE DRAWING IS 34 X 22

12/3/2022

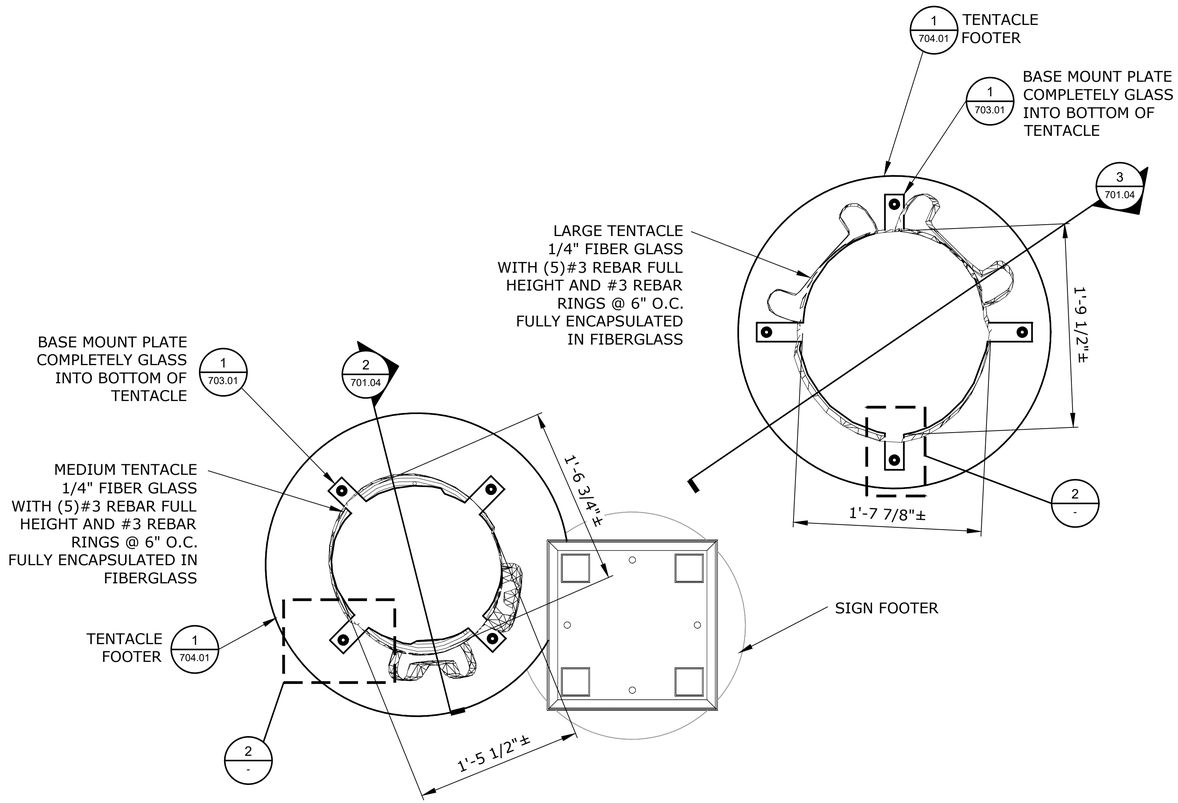

1 REEF EXPLORER SIGN SECTION
SCALE: 1 1/2" = 1'-0"

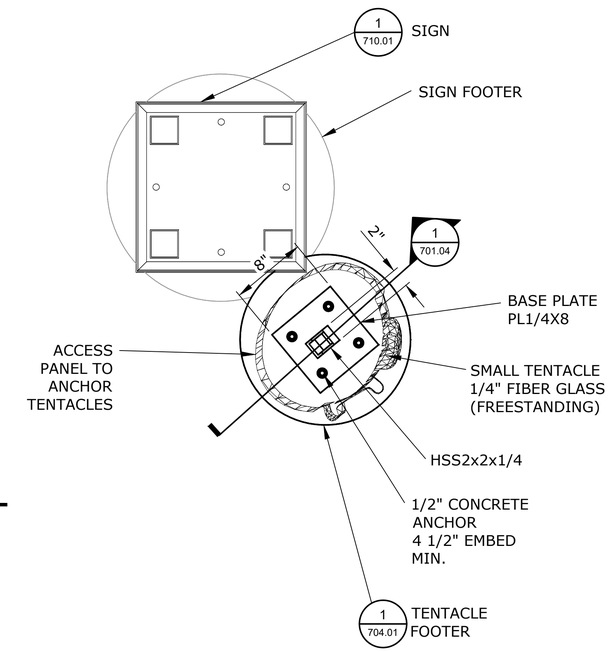

NOTE:
ACCESS PANEL TO BE LOCATED UNDER TENTACLES SUCTION CUPS IF POSSIBLE.

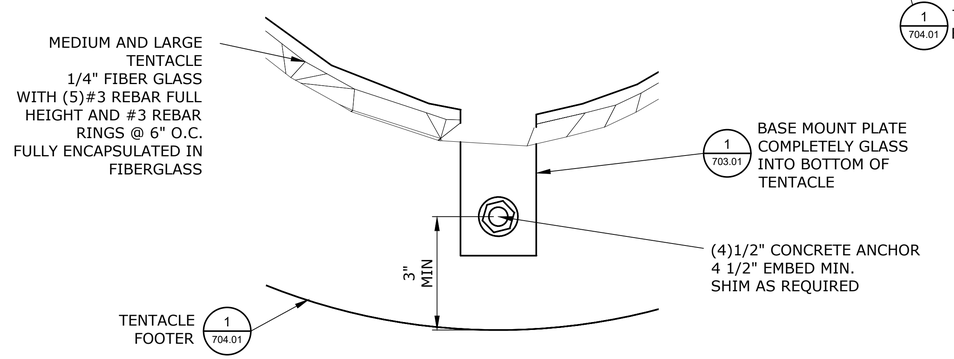

2 MEDIUM AND LARGE TENTACLE MOUNT DETAIL
SCALE: HALF

SEAWORLD
SAN DIEGO
REALM ICONS

REV.	DATE	BY	DESCRIPTION
△			
△			
△			
△			
△			
△			

This Document contains confidential material and trade secret information belonging exclusively to the client. Any unauthorized use, disclosure, dissemination or duplication of the information contained herein may result in liability under applicable laws.

nassal™
ORLANDO • LOS ANGELES
www.builtbynassal.com

Drawn By: JSL
Checked By: MN
Date: 07-06-22
Job Number: 1059
Project: SWSD REALM ICONS
Building/Attraction: PLANTER 6
Drawing Title: REEF EXPLORER ENTRY PORTAL RF-A
Part No.
Scale: AS NOTED
Drawing No. 701.03
REV. ----

THESE DRAWINGS MAY NOT BE USED FOR ANY PURPOSE WITHOUT PRIOR WRITTEN CONSENT OF THE NASSAL CO.

J:\9059-02 - SWSD Realm Icons\NASSAL DRAWINGS\REEF EXPLORER ENTRY PORTAL RF-A.dwg

NOTE: FULL SIZE DRAWING IS 34 X 22

12/3/2022

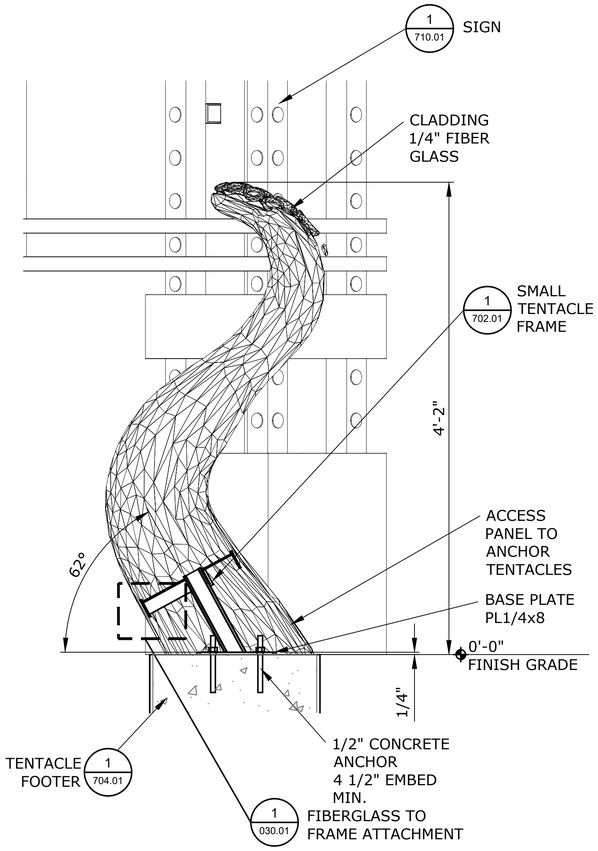

1 REEF EXPLORER SIGN SMALL TENTACLE SECTION (FREESTANDING)
SCALE: 1 1/2" = 1'-0"

NOTE:
VERIFY ARMATURE SUPPORT LENGTH, ANGLE CUT AND LOCATION TO FIBERGLASS CLADDING

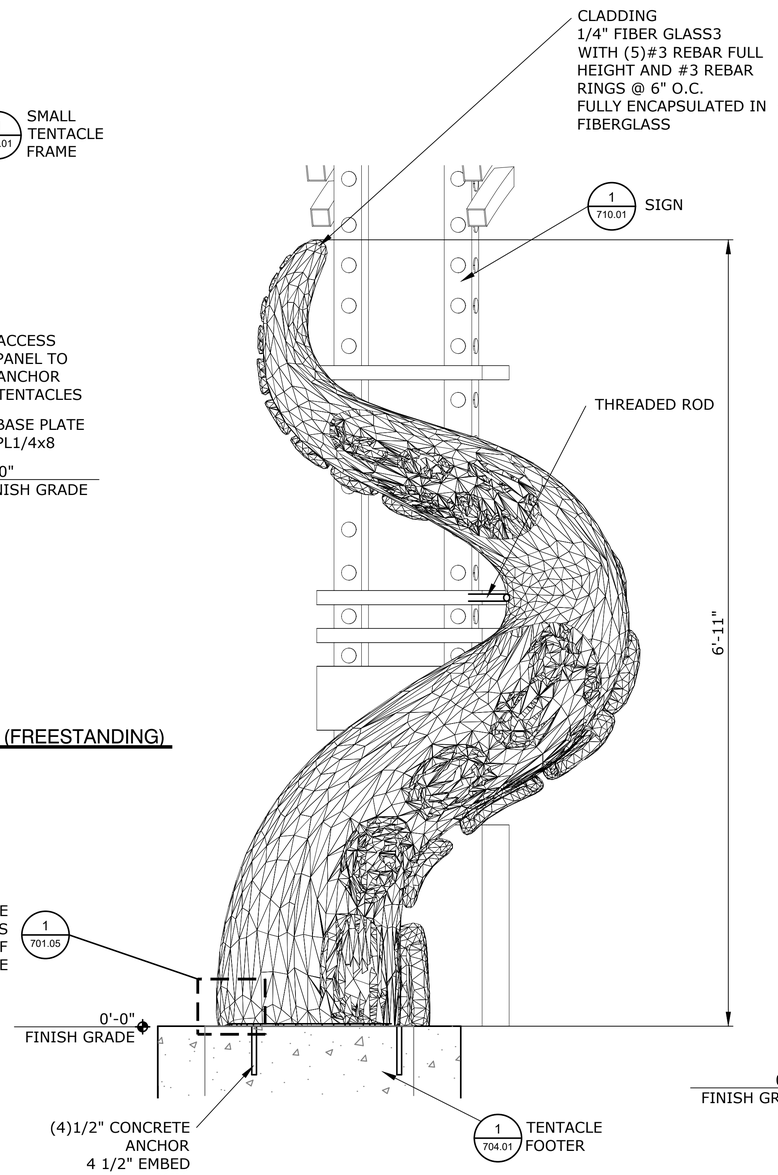

NOTE:
ACCESS PANEL TO BE LOCATED UNDER TENTACLES SUCTION CUPS IF POSSIBLE.

2 REEF EXPLORER SIGN MEDIUM TENTACLE SECTION
SCALE: 1 1/2" = 1'-0"

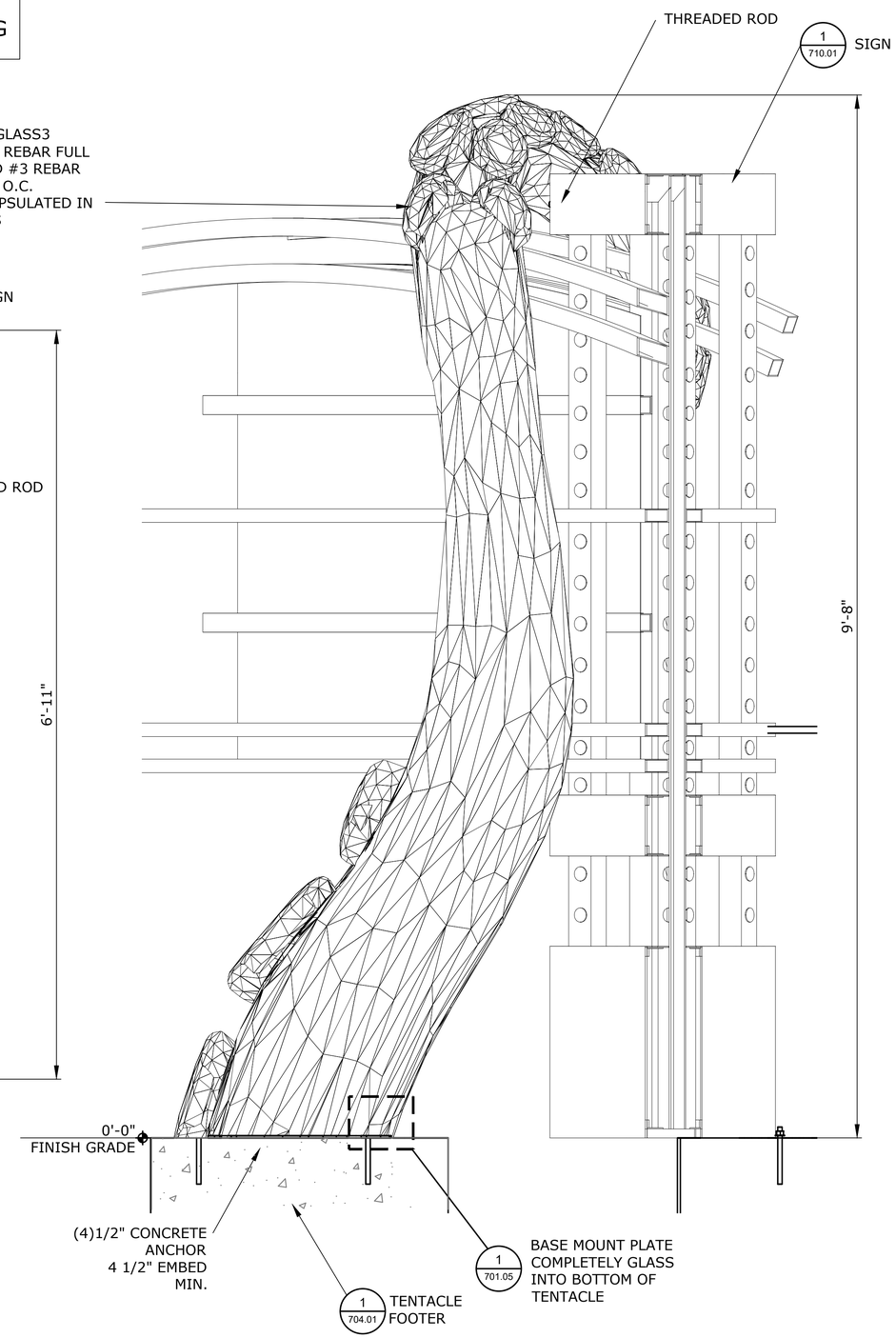

3 REEF EXPLORER SIGN LARGE TENTACLE SECTION
SCALE: 1 1/2" = 1'-0"

SEAWORLD
SAN DIEGO
REALM ICONS

REV.	DATE	BY	DESCRIPTION
△			
△			
△			
△			
△			
△			

This Document contains confidential material and trade secret information belonging exclusively to the client. Any unauthorized use, disclosure, dissemination or duplication of the information contained herein may result in liability under applicable laws.

nassal™
ORLANDO • LOS ANGELES
www.builtbynassal.com

Drawn By: JSL
Checked By: MN
Date: 07-06-22
Job Number: 1059
Project: SWSD REALM ICONS
Building/Attraction: PLANTER 6
Drawing Title: REEF EXPLORER ENTRY PORTAL RF-A
Part No.
Scale: AS NOTED
Drawing No. 701.04
REV. ----

THESE DRAWINGS MAY NOT BE USED FOR ANY PURPOSE WITHOUT PRIOR WRITTEN CONSENT OF THE NASSAL CO.

J:\9059-02 - SWSD Realm Icons\NASSAL DRAWINGS\REEF EXPLORER ENTRY PORTAL RF-A.dwg

NOTE: FULL SIZE DRAWING IS 34 X 22

12/3/2022

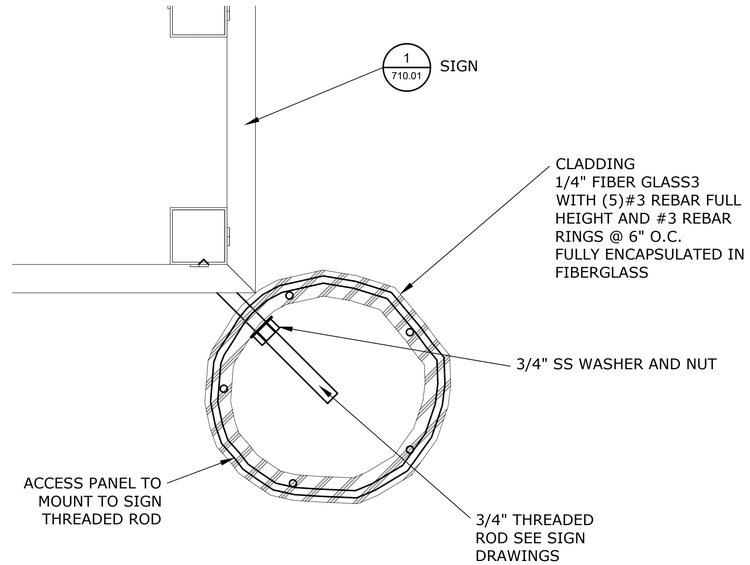

2 MEDIUM TENTACLE MOUNT TO SIGN DETAIL
SCALE: 3" = 1'-0"

NOTE:
ACCESS PANEL TO BE LOCATED UNDER TENTACLES SUCTION CUPS IF POSSIBLE.

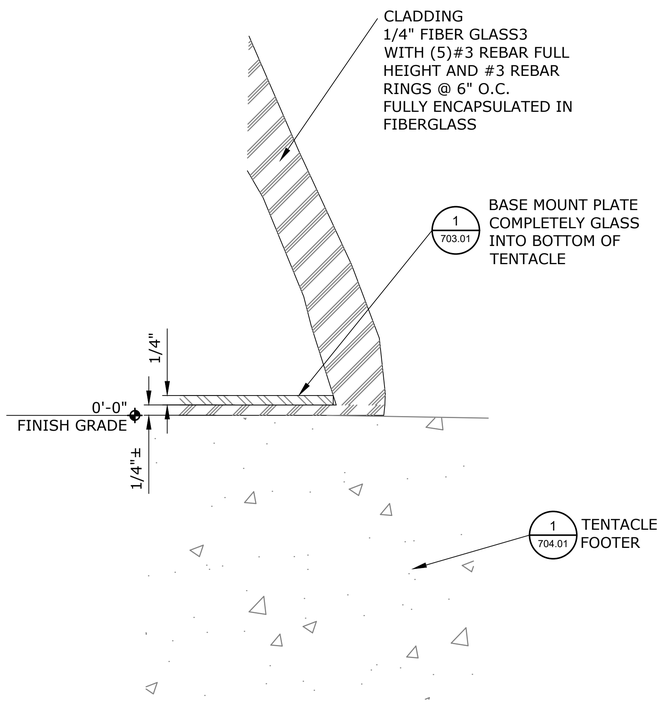

1 MEDIUM AND LARGE TENTACLE DETAIL
SCALE: HALF

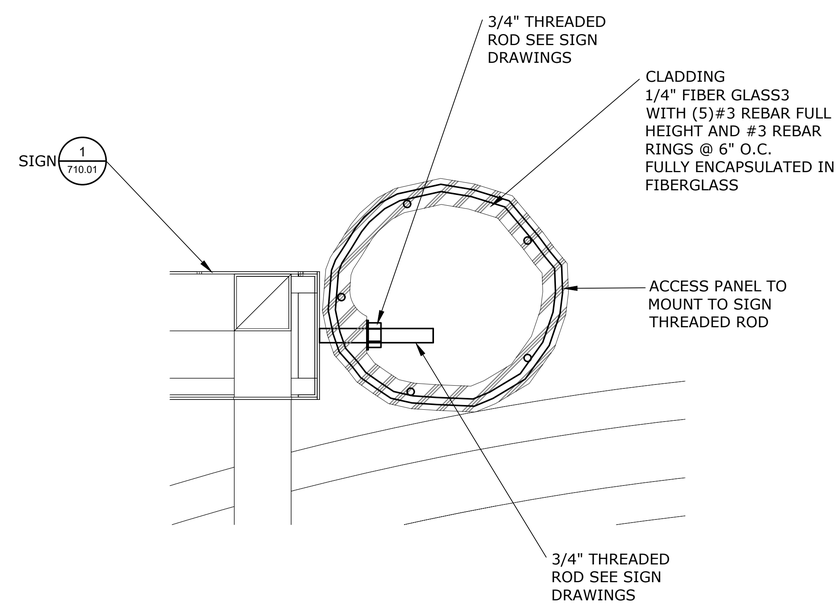

3 LARGE TENTACLE MOUNT TO SIGN DETAIL
SCALE: 3" = 1'-0"

SEAWORLD
SAN DIEGO
REALM ICONS

REV.	DATE	BY	DESCRIPTION
△			
△			
△			
△			
△			
△			

This Document contains confidential material and trade secret information belonging exclusively to the client. Any unauthorized use, disclosure, dissemination or duplication of the information contained herein may result in liability under applicable laws.

nassal™
ORLANDO • LOS ANGELES
www.builtbynassal.com

Drawn By: JSL
Checked By: MN
Date: 07-06-22
Job Number: 1059
Project: SWSD REALM ICONS
Building/Attraction: PLANTER 6
Drawing Title: REEF EXPLORER ENTRY PORTAL RF-A
Part No.
Scale: AS NOTED
Drawing No. 701.05
REV. ----

THESE DRAWINGS MAY NOT BE USED FOR ANY PURPOSE WITHOUT PRIOR WRITTEN CONSENT OF THE NASSAL CO.

J:\9059-02 - SWSD Realm Icons\NASSAL DRAWINGS\REEF EXPLORER ENTRY PORTAL RF-A.dwg

NOTE: FULL SIZE DRAWING IS 34 X 22

12/3/2022

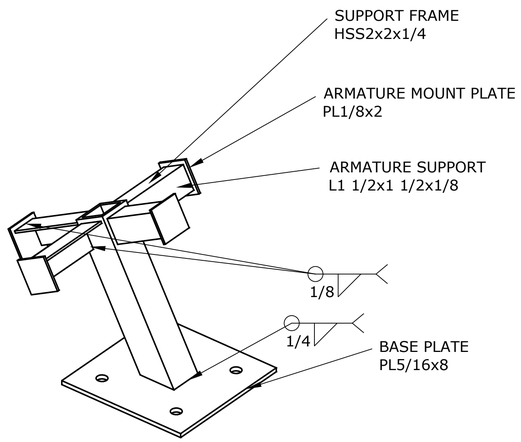

1 SMALL TENTACLE FRAME
SCALE: NONE

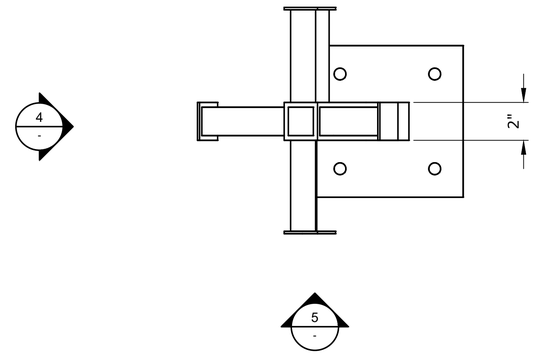

2 SMALL TENTACLE FRAME
SCALE: 3" = 1'-0"
0 1" 2" 3" 6"

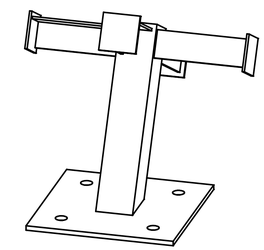

3 SMALL TENTACLE FRAME
SCALE: NONE

NOTE:
VERIFY ARMATURE SUPPORT LENGTH, ANGLE CUT AND LOCATION TO FIBERGLASS CLADDING

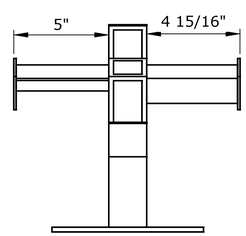

4 SMALL TENTACLE FRAME
SCALE: 3" = 1'-0"
0 1" 2" 3" 6"

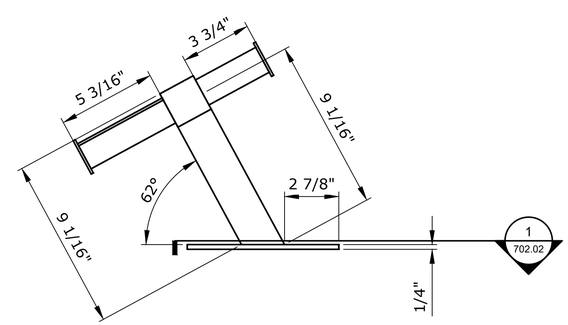

5 SMALL TENTACLE FRAME
SCALE: 3" = 1'-0"
0 1" 2" 3" 6"

J:\9059-02 - SWSD Realm Icons\NASSAL DRAWINGS\REEF EXPLORER ENTRY PORTAL RF-A.dwg

SEAWORLD
SAN DIEGO
REALM ICONS

REV.	DATE	BY	DESCRIPTION
△			
△			
△			
△			
△			
△			

This Document contains confidential material and trade secret information belonging exclusively to the client. Any unauthorized use, disclosure, dissemination or duplication of the information contained herein may result in liability under applicable laws.

nassal™
ORLANDO • LOS ANGELES
www.builtbynassal.com

Drawn By: JSL
Checked By: MN
Date: 07-06-22
Job Number: 1059
Project: SWSD REALM ICONS
Building/Attraction: PLANTER 6
Drawing Title: REEF EXPLORER ENTRY PORTAL RF-A
Part No.
Scale: AS NOTED
Drawing No. 702.01
REV. ----

THESE DRAWINGS MAY NOT BE USED FOR ANY PURPOSE WITHOUT PRIOR WRITTEN CONSENT OF THE NASSAL CO.

NOTE: FULL SIZE DRAWING IS 34 X 22

12/3/2022

J:\9059-02 - SWSD Realm Icons\NASSAL DRAWINGS\REEF EXPLORER ENTRY PORTAL RF-A.dwg

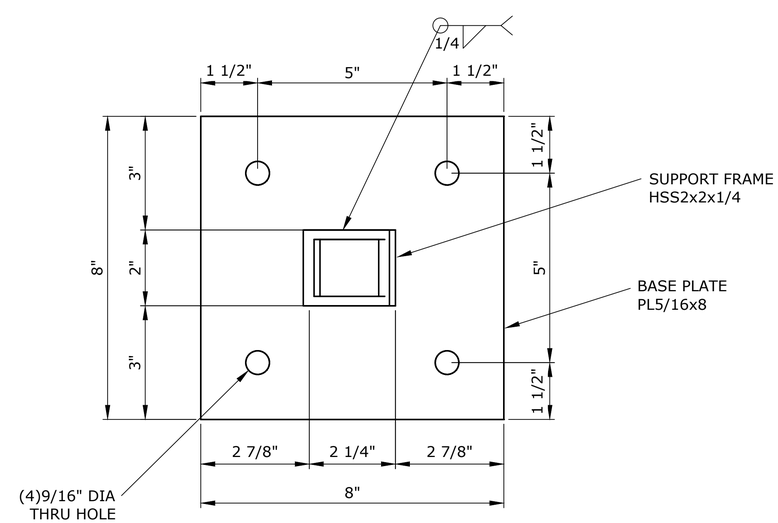

1 SMALL TENTACLE FRAME
SCALE: HALF

0 ½" 1" 2"

SEAWORLD
SAN DIEGO
REALM ICONS

REV.	DATE	BY	DESCRIPTION
△			
△			
△			
△			
△			
△			

This Document contains confidential material and trade secret information belonging exclusively to the client. Any unauthorized use, disclosure, dissemination or duplication of the information contained herein may result in liability under applicable laws.

nassal™
ORLANDO • LOS ANGELES
www.builtbynassal.com

Drawn By: JSL
Checked By: MN
Date: 07-06-22
Job Number: 1059
Project: SWSD REALM ICONS
Building/Attraction: PLANTER 6
Drawing Title: REEF EXPLORER ENTRY PORTAL RF-A
Part No.
Scale: AS NOTED
Drawing No. 702.02
REV. ----

THESE DRAWINGS MAY NOT BE USED FOR ANY PURPOSE WITHOUT PRIOR WRITTEN CONSENT OF THE NASSAL CO.

NOTE: FULL SIZE DRAWING IS 34 X 22

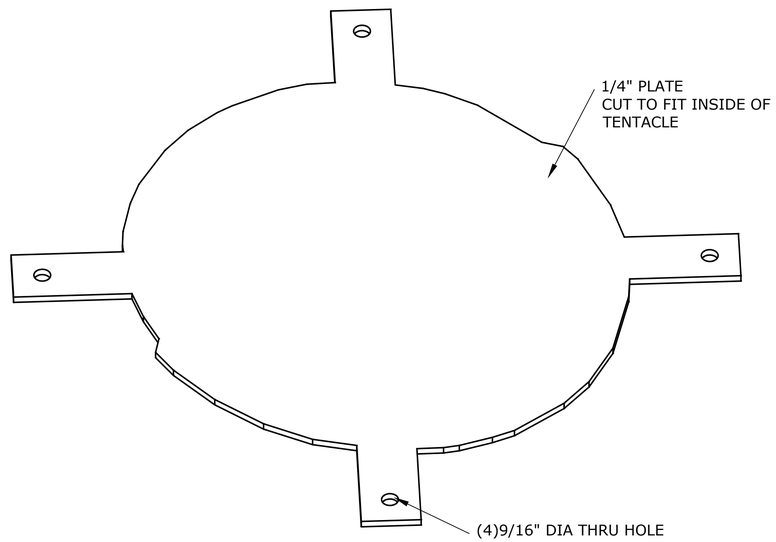

1 MEDIUM AND LARGE TENTACLE BASE MOUNT
SCALE: NONE

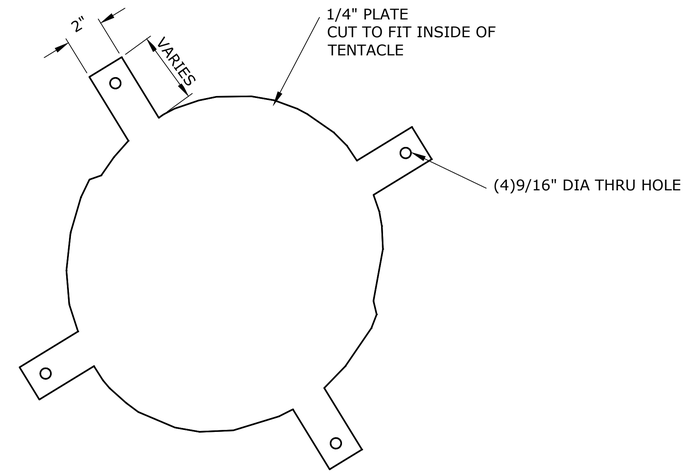

2 MEDIUM AND LARGE TENTACLE BASE MOUNT
SCALE: 3" = 1'-0"
0 1" 2" 3" 6"

SEAWORLD
SAN DIEGO
REALM ICONS

REV.	DATE	BY	DESCRIPTION
△			
△			
△			
△			
△			
△			

This Document contains confidential material and trade secret information belonging exclusively to the client. Any unauthorized use, disclosure, dissemination or duplication of the information contained herein may result in liability under applicable laws.

nassal™
ORLANDO • LOS ANGELES
www.builtbynassal.com

Drawn By: JSL
Checked By: MN
Date: 07-06-22
Job Number: 1059
Project: SWSD REALM ICONS
Building/Attraction: PLANTER 6
Drawing Title: REEF EXPLORER ENTRY PORTAL RF-A
Part No.
Scale: AS NOTED
Drawing No. 703.01
REV. ----

THESE DRAWINGS MAY NOT BE USED FOR ANY PURPOSE WITHOUT PRIOR WRITTEN CONSENT OF THE NASSAL CO.

12/3/2022

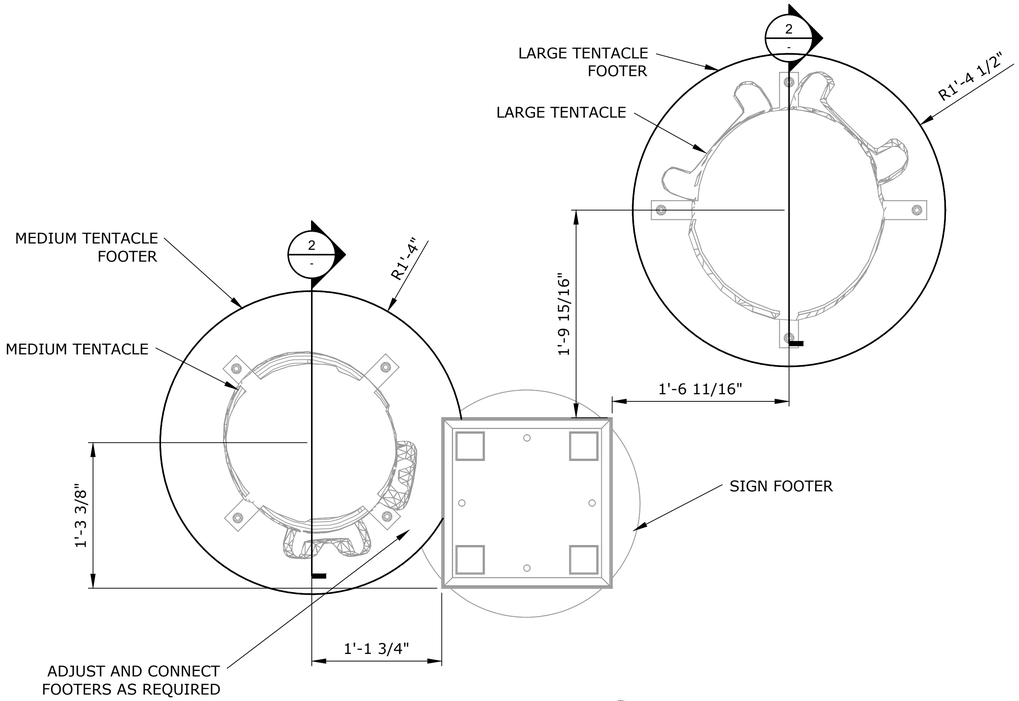

1 REEF EXPLORER SIGN TENTACLE FOOTER PLAN
SCALE: 1 1/2" = 1'-0"
0 3" 6" 1'

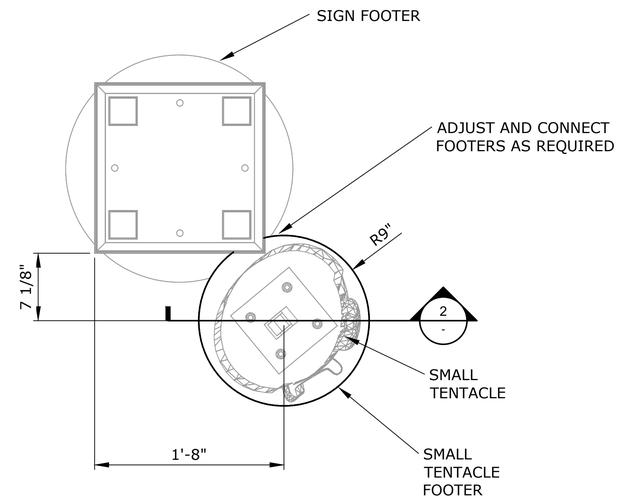

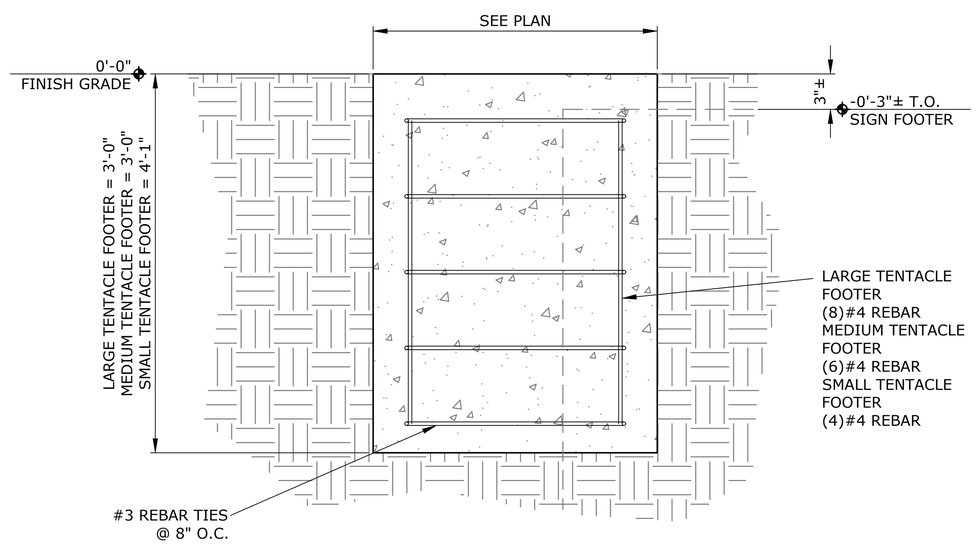

2 REEF EXPLORER SIGN TENTACLE FOOTER DETAIL
SCALE: NONE

SEAWORLD
SAN DIEGO
REALM ICONS

REV.	DATE	BY	DESCRIPTION
△			
△			
△			
△			
△			
△			

This Document contains confidential material and trade secret information belonging exclusively to the client. Any unauthorized use, disclosure, dissemination or duplication of the information contained herein may result in liability under applicable laws.

nassal™
ORLANDO • LOS ANGELES
www.builtbynassal.com

Drawn By: JSL
Checked By: MN
Date: 07-06-22
Job Number: 1059
Project: SWSD REALM ICONS
Building/Attraction: PLANTER 6
Drawing Title: REEF EXPLORER ENTRY PORTAL RF-A
Part No.
Scale: AS NOTED
Drawing No. 704.01
REV. ----

THESE DRAWINGS MAY NOT BE USED FOR ANY PURPOSE WITHOUT PRIOR WRITTEN CONSENT OF THE NASSAL CO.

J:\9059-02 - SWSD Realm Icons\NASSAL DRAWINGS\REEF EXPLORER ENTRY PORTAL RF-A.dwg

NOTE: FULL SIZE DRAWING IS 34 X 22

12/3/2022

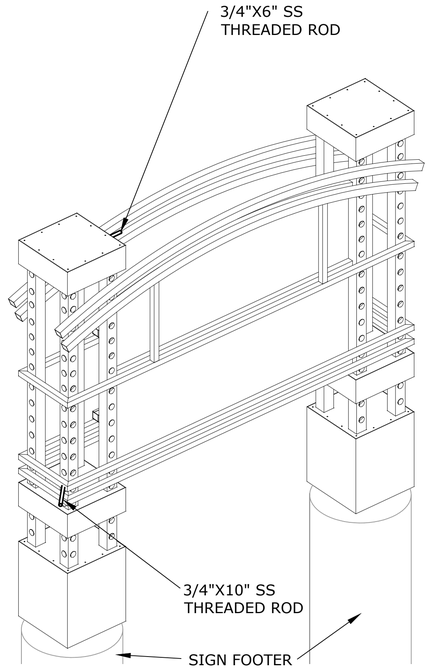

1 REEF EXPLORER SIGN FRONT ISO
SCALE: NONE

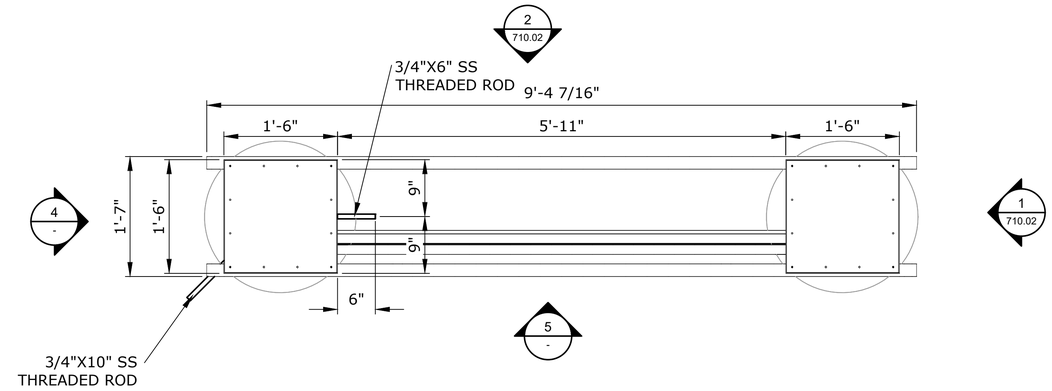

3 REEF EXPLORER SIGN FRONT PLAN
SCALE: 1" = 1'-0"

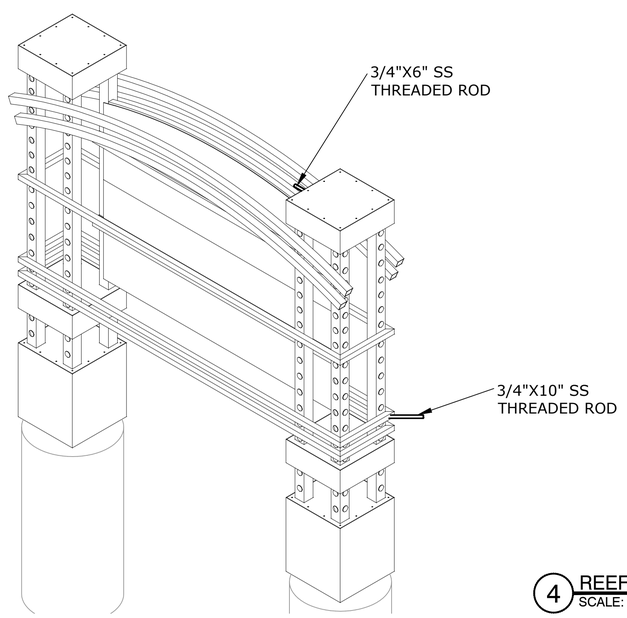

2 REEF EXPLORER SIGN REAR ISO
SCALE: NONE

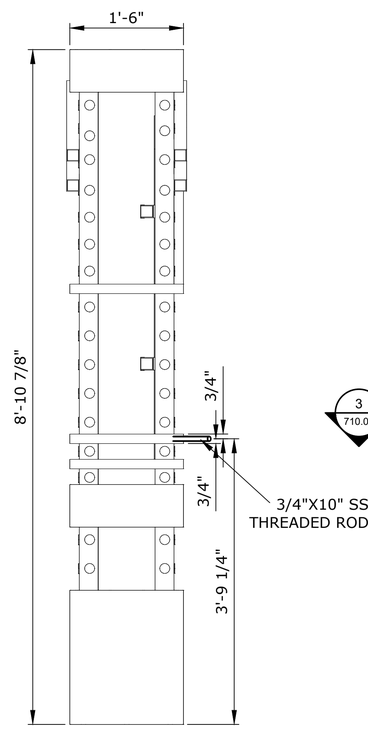

4 REEF EXPLORER SIGN SIDE ELEVATION
SCALE: 1" = 1'-0"

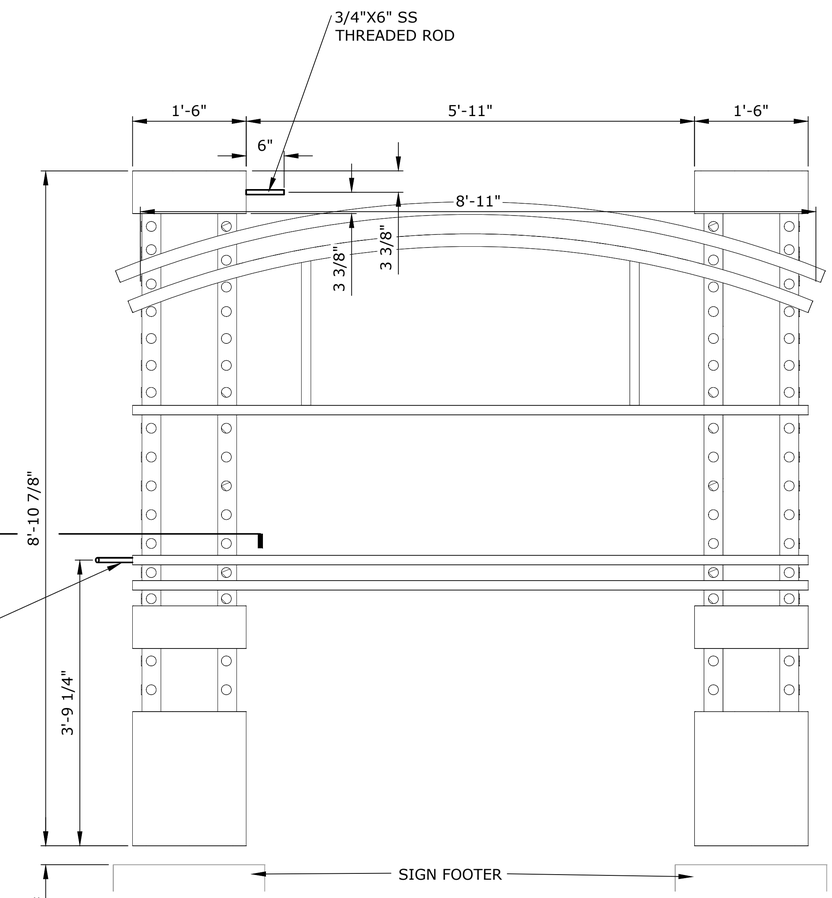

5 REEF EXPLORER SIGN FRONT ELEVATION
SCALE: 1" = 1'-0"

SEAWORLD
SAN DIEGO
REALM ICONS

REV.	DATE	BY	DESCRIPTION
△			
△			
△			
△			
△			
△			

This Document contains confidential material and trade secret information belonging exclusively to the client. Any unauthorized use, disclosure, dissemination or duplication of the information contained herein may result in liability under applicable laws.

nassal™
ORLANDO • LOS ANGELES
www.builtbynassal.com

Drawn By: JSL
Checked By: MN
Date: 07-06-22
Job Number: 1059
Project: SWSD REALM ICONS
Building/Attraction: PLANTER 6
Drawing Title: REEF EXPLORER ENTRY PORTAL RF-A
Part No.
Scale: AS NOTED
Drawing No. 710.01
REV. ----

THESE DRAWINGS MAY NOT BE USED FOR ANY PURPOSE WITHOUT PRIOR WRITTEN CONSENT OF THE NASSAL CO.

J:\9059-02 - SWSD Realm Icons\NASSAL DRAWINGS\REEF EXPLORER ENTRY PORTAL RF-A.dwg

NOTE: FULL SIZE DRAWING IS 34 X 22

12/3/2022

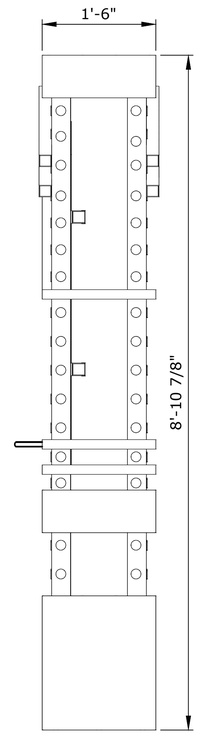

1 REEF EXPLORER SIGN SIDE ELEVATION
SCALE: 1" = 1'-0"

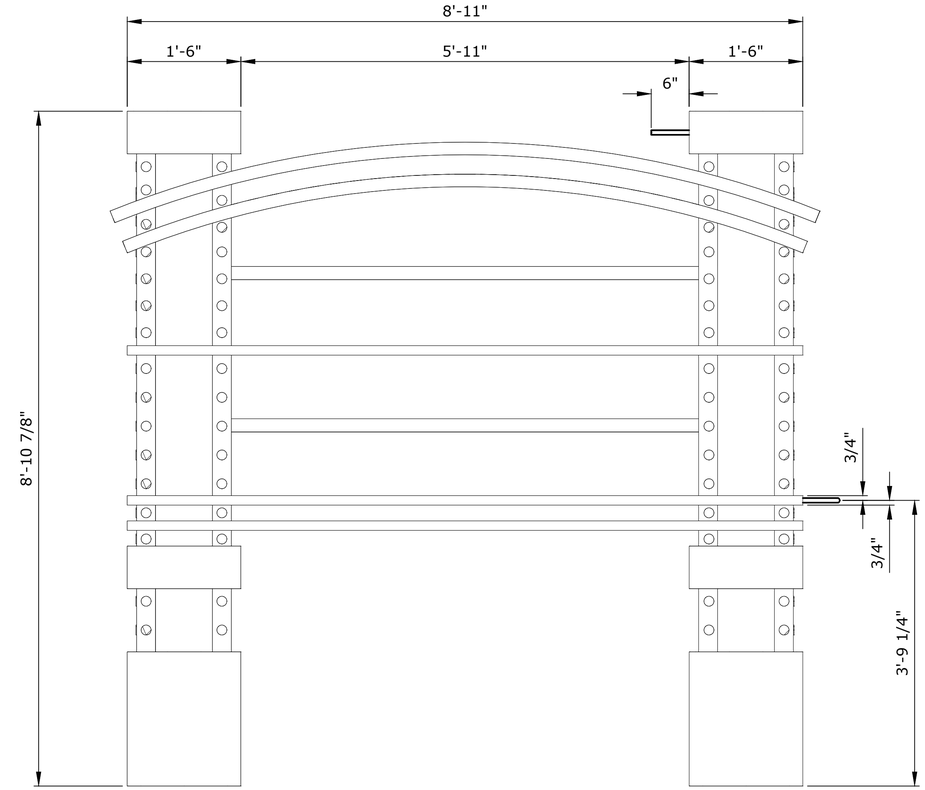

2 REEF EXPLORER SIGN REAR ELEVATION
SCALE: 1" = 1'-0"

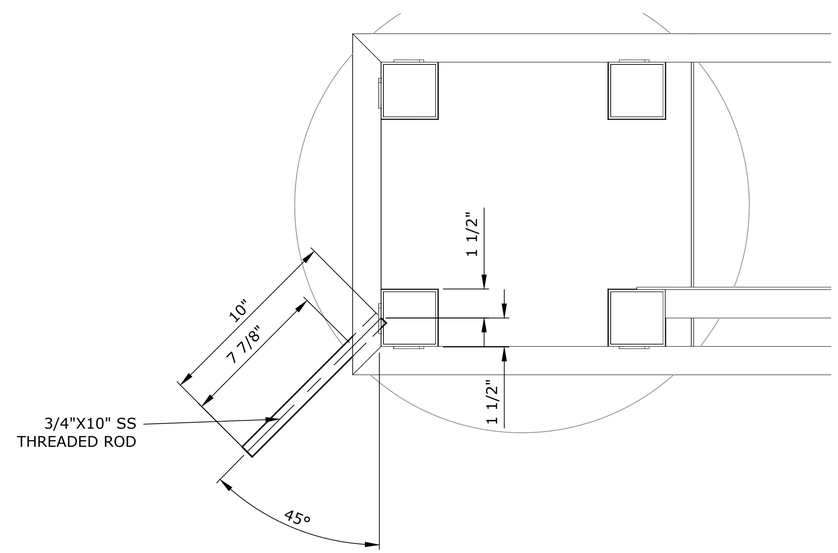

3 REEF EXPLORER SIGN DETAIL
SCALE: 3" = 1'-0"

SEAWORLD
SAN DIEGO
REALM ICONS

REV.	DATE	BY	DESCRIPTION
△			
△			
△			
△			
△			
△			

This Document contains confidential material and trade secret information belonging exclusively to the client. Any unauthorized use, disclosure, dissemination or duplication of the information contained herein may result in liability under applicable laws.

nassal™
ORLANDO • LOS ANGELES
www.builtbynassal.com

Drawn By: JSL
Checked By: MN
Date: 07-06-22
Job Number: 1059
Project: SWSD REALM ICONS
Building/Attraction: PLANTER 6
Drawing Title: REEF EXPLORER ENTRY PORTAL RF-A
Part No.
Scale: AS NOTED
Drawing No. 710.02
REV. ----

THESE DRAWINGS MAY NOT BE USED FOR ANY PURPOSE WITHOUT PRIOR WRITTEN CONSENT OF THE NASSAL CO.

J:\9059-02 - SWSD Realm Icons\NASSAL DRAWINGS\REEF EXPLORER ENTRY PORTAL RF-A.dwg

NOTE: FULL SIZE DRAWING IS 34 X 22