LINE SYMBOLOGY

- PRIMARY PROCESS FLOW
- MANUAL ADDITIONS
- AUXILIARY OR UTILITY LINE
- INSULATED EQUIPMENT
- XX — INSULATED PIPE XX INDICATES: HC = HEAT CONSERVATION; CC = COLD CONSERVATION; PP = PERSONNEL PROTECTION; AS = ANTI-SWEAT
- E(S) — ELECTRICALLY TRACED; STEAM TRACED
- SERVICE DESCRIPTION 2 EQUIPMENT NUMBER DRAWING NUMBER — LINE CONTINUATION
- SERVICE TYPE DESCRIPTION 3 DRAWING NUMBER — UTILITY SUPPLY; UTILITY RETURN
- CONTROL SIGNAL ELECTRICAL
- EXISTING
- FUTURE PIPING OR EQUIPMENT BOUNDARY
- PD — PROCESS DUCT
- INSTRUMENT AIR LINE (PNEUMATIC)
- INSTRUMENT CAPILLARY TUBING
- HYDRAULIC-SIGNAL
- ELECTROMAGNETIC, SONIC SIGNAL
- SOFTWARE OR DATA LINK
- VENDOR PACKAGE BOUNDARY
- S1 S2 — CHANGE OF PIPING MATERIAL SPEC
- X — PIPING TIE-IN DESIGNATION X = SEQUENTIAL NUMBER
- XXX SB XXX — SYSTEM OWNER BOUNDARY

SYSTEM OWNER BOUNDARY IDENTIFICATIONS

WHERE XXX IS ONE OF THE FOLLOWING ABBREVIATIONS:

API = ACTIVE PHARMACEUTICAL INGREDIENT

CU = CENTRAL UTILITIES

FPM = FINAL PRODUCT MANUFACTURING

GBD = GLOBAL BIOLOGICAL DEVELOPMENT

PIPING SYMBOLOGY

- FLANGED CONNECTION/ BLIND FLANGE
- WELDED PIPE CAP
- SCREWED OR SOCKET WELDED PIPE CAP
- CONCENTRIC REDUCER
- ECCENTRIC REDUCER
- SANITARY PIPE CLAMP
- VICTAULIC COUPLING
- SCREWED CONNECTION (THERMOWELL)
- QUICK CONNECT
- HOSE BARB
- HOSE COUPLING
- INGOLD CONNECTION
- FLEXIBLE TUBING/HOSE
- UNION
- EXPANSION JOINT(FLEX JOINT)
- UNION TEE
- (OPEN) (CLOSED) — SPECTACLE BLANK
- CIRCULAR BLANK
- STEAM TRAP
- "Y" STRAINER
- STRAINER, GENERAL
- STRAINER
- EJECTOR/EDUCTOR
- FILTER, GENERAL
- PULSATION DAMPENER
- SLOPED LINE
- X — DRAIN X INDICATES: P = PROCESS S = SANITARY
- HOODED VENT/OUTLET
- VENT
- AUTOMATIC VENT

VALVE SYMBOLOGY

- TCV
- VALVE, GENERAL
- GATE VALVE
- GLOBE VALVE
- BALL VALVE
- PLUG VALVE
- PINCH VALVE
- DIAPHRAGM VALVE
- GMP DIAPHRAGM VALVE
- TRI-CLAMPED IN-LINE CHECK VALVE
- ZERO STATIC DIAPHRAGM VALVE
- 3-PORT DIAPHRAGM VALVE
- 4-PORT DIAPHRAGM VALVE
- NEEDLE VALVE
- BUTTERFLY VALVE
- CHECK VALVE
- SWING CHECK VALVE
- SPRING LOADED CHECK VALVE
- LIFT CHECK VALVE
- 3-WAY VALVE
- 3-WAY BALL VALVE
- GAS COCK
- ANGLE VALVE
- ANGLE BALL VALVE
- S.C. — SANITARY SAMPLE VALVE
- ASEPTIC CONNECTOR
- MIX PROOF VALVE
- (FAIL IN DIRECTION OF ARROW) — 3-WAY DIVERTER VALVE
- FLUSH BOTTOM VALVE (GENERAL)
- PSV — PRESSURE RELIEF VALVE
- PSV — VACUUM RELIEF VALVE
- PSE — FLANGED IN-LINE RUPTURE DISC FOR PRESSURE RELIEF
- PSE — FLANGED IN-LINE RUPTURE DISC FOR VACUUM RELIEF
- S.C. — SAMPLE CONN.
- C.S.O. C.S.C. — CAR SEAL OPEN CAR SEAL CLOSED
- L.O. L.C. N.O. N.C. — LOCKED OPEN LOCKED CLOSED NORMALLY OPEN NORMALLY CLOSED
- KNIFE/SLIDE GATE
- BOSS VALVE ASSEMBLY
- BACKFLOW PREVENTER
- PINCH CLAMP
- CIRCUIT SETTER
- VENT — 2-WAY VALVE W/AIR BREAK
- VENT — 3-WAY VALVE W/AIR BREAK
- PROCESS CONNECTION THROUGH STERILE TUBING FUSING

FUNCTION IDENTIFICATION

X — X = FUNCTION DESIGNATION

FUNCTION DESIGNATION – USE APPROPRIATE SYMBOL

C	C = CONDUCTIVITY	dO_2	dO_2 = DISSOLVED OXYGEN
R/L	R/L = REMOTE/LOCAL	SCR	SCR = SILICONE CONTROLLED RECTIFIER
I/P	I/P = CURRENT TO PNEUMATIC TRANSDUCER	TOC	TOC = TOTAL ORGANIC CARBON
pH	pH = MEASUREMENT	UV A280	UV A280 = ULTRA VIOLET RADIATION

CONTROL VALVE SYMBOLOGY

- HANDWHEEL OPERATED VALVE
- ON/OFF VALVE
- M — MOTOR OPERATED VALVE
- 2-WAY SOLENOID VALVE (ONLY IN-LINE SOLENOID VALVE SHOWN IN P&ID)
- CYLINDER OPERATED VALVE
- VANE OPERATED VALVE
- MODULATING VALVE
- BALANCING VALVE
- FAIL OPEN VALVE
- FAIL CLOSED VALVE
- FAIL LAST POSITION (NO STEM ARROW)
- PCV — BACK PRESSURE REGULATOR (SELF-CONTAINED)
- PCV — BACK PRESSURE VALVE (LINE ACTUATED)
- PCV — PRESSURE REDUCING VALVE (LINE ACTUATED)
- PCV — PRESSURE REDUCING VALVE (SELF-CONTAINED)

INSTRUMENT SYMBOLOGY

- LOCALLY MOUNTED INSTRUMENT
- PLC OR DCS BASED INSTRUMENT
- BEHIND PANEL OR RACK MOUNTED INSTRUMENT
- H / L — TYPICAL ALARM LEVELS FOR PLC MOUNTED OR DCS BASED INSTRUMENT
- LP-XX — LOCAL PANEL MOUNTED INSTRUMENT, PANEL NUMBER IDENTIFIER
- E — TYPICAL FOR EXISTING INSTRUMENT
- V — TYPICAL FOR INSTRUMENT SUPPLIED BY PACKAGED EQUIPMENT VENDOR
- FUNCTION IN SAFETY INSTRUMENTED SYSTEM (SIS)
- FUNCTION IN HIGHER LEVEL SAFETY COMPUTER
- FLANGED IN-LINE ORIFICE PLATE
- TRI-CLAMPED IN-LINE ORIFICE PLATE
- DIAPHRAGM SEAL
- VENTURI TUBE OR FLOW NOZZLE
- VORTEX SHEDDING METER
- PITOT VENTURI TUBE OR AVERAGING PILOT
- MAG — MAGNETIC FLOW METER
- ROTAMETER
- CORIOLIS TYPE METER
- TURBINE OR PROPELLER TYPE PRIMARY ELEMENT
- THERMAL MASS FLOW METER
- IN-LINE SIGHT GLASS
- SIGHT GLASS LIGHT

VALVE/FITTING NUMBERING CONVENTION

VALVES & FITTINGS ARE SHOWN ON P&iDs AND ARE NUMBERED AS FOLLOWS:

[EQUIPMENT NUMBER] TC SN

- SEQUENTIAL NUMBER
- TYPE CODE (SEE NOTE 7)
- EQUIPMENT NUMBER IS OF THE PIECE OF EQUIPMENT THAT THE VALVE OR FITTING IS MOST CLOSELY ASSOCIATED

1

INSTRUMENTATION WITH EQUIPMENT TAGGING

BRKBP69-V002-HW01-WA001-PI0001

- INSTRUMENT TYPE IDENTIFIER AND LOOP NUMBER
- EQUIPMENT TYPE IDENTIFIER
- STANDARD SYSTEM
- AREA SPECIFIERS
- LOCATION OF EQUIPMENT

INSTRUMENTATION IDENTIFICATION

PIPING & INSTRUMENTATION DIAGRAM (P&ID) INSTRUMENTATION BUBBLES WILL CONTAIN LOOP NUMBERS FOR: INSTRUMENTATION, CONTROL LOOPS AND DEVICES. THE TOP HALF OF THE INSTRUMENTATION BUBBLE CONTAINS THE DEVICE TYPE/FUNCTION LETTERS. THE BOTTOM HALF OF THE INSTRUMENTATION BUBBLE CONTAINS THE LOOP NUMBER (EXAMPLE A). WHEN THE DEVICE TAG HAS A SUFFIX, USE THE SUFFIX WITH THE LOOP NUMBER IN THE BOTTOM OF THE INSTRUMENTATION BUBBLE TO DIFFERENTIATE SIMILAR TAG NUMBERS (EXAMPLE B).

EXAMPLE A: PCV 8012V001P001

EXAMPLE B: RUN/VERIFY — SIC 2225X30S01A; SI 2225X30S01B; SI 2225X30S01C (FWD); SI 2225X30S01D (REV)

SEE NOTE 1

INSTRUMENT EQUIVALENCY

SHOWN ON P&ID's — ACTUAL INSTRUMENT DEVICES

HS; HV; HY; AIR SUPPLY; EXHAUST

INSTRUMENT LOGIC

- X H/L — X = INTERLOCK NUMBER; H OR L REFERS TO INTERLOCK LEVEL
- X H — INITIATING INTERLOCK SIGNAL
- X — RECEIVING INTERLOCK SIGNAL

PIPELINE DESIGNATION

EXAMPLE: 2"-CWFI-00000 10-A4

- SIZE
- SERVICE *
- PIPING MATERIAL SPECIFICATION *
- SEQUENTIAL LINE NUMBER
- ORIGINATING P&ID DRAWING NUMBER

*SEE NOTE 2

ABBREVIATIONS

HOA = HAND/OFF/AUTO

LOR = LOCAL/OFF/REMOTE

SP = SET POINT

SEAL IDENTIFICATION

DRY – DRY PHARMEUTICAL SINGLE SEAL

SMS – SINGLE MECHANICAL SEAL

DMS – DOUBLE MECHANICAL SEAL, LUBRICATED WITH STEAM CON-DENSATE

DML – DOUBLE MECHANICAL SEAL, LUBRICATED WITH WFI

NOTES

1. FOR EQUIPMENT AND INSTRUMENT TAG NUMBERING, SEE BAYER GROUP STANDARD; WN 9060, REVISED 2015-08; PLANT STRUCTURE CODE AKZ, STRUCTURE AND IDENTIFICATION LETTERS. 2
2. FOR SERVICE ABBREVIATIONS AND PIPING MATERIAL SPECIFICATIONS, SEE BHC ENGINEERING STANDARDS 22.01.04.02.
3. ALL EQUIPMENT AND VESSEL CONNECTIONS WHICH ARE NOT SPECIFICALLY SIZED SHOULD BE LINE SIZE.
4. THIS LEAD SHEET WILL NOT BE MODIFIED, EXCEPT BY BHC BERKELEY SITE ENGINEERING DOCUMENTATION DEPARTMENT.
5. SYMBOLOGY SHOWN ON THIS LEAD SHEET MUST BE USED IN CREATING/REVISING BHC BERKELEY SITE P&IDs. THE USE OF NEW SYMBOLOGY NOT SHOWN ON THIS LEAD SHEET MUST BE APPROVED BY THE ENGINEERING DOCUMENTATION DEPARTMENT PRIOR TO USE.
6. ALL TRI-CLAMPED INSTRUMENT CONNECTION SIZES ARE 1-1/2", UNLESS OTHERWISE NOTED.
7. VALVES & FITTINGS TYPE CODE/DESCRIPTION:

TYPE CODE	TYPE DESCRIPTION
CV	CHECK VALVE
MV	MANUAL (HAND) VALVE
SR	STRAINER
ST	STEAM TRAP
FJ	FLEX JOINT

1

EQUIPMENT TAGGING

BRKBP69-V002-HW01-VL004

- EQUIPMENT TYPE IDENTIFIER
- STANDARD SYSTEM
- AREA SPECIFIERS
- LOCATION OF EQUIPMENT

STAND ALONE INSTRUMENTATION TAGGING

BRKBP69-V002-HW01-FIT001

- INSTRUMENT TYPE IDENTIFIER
- STANDARD SYSTEM
- AREA SPECIFIERS
- LOCATION OF EQUIPMENT

LEAD SHEET, PROCESS CONTROL SYSTEMS PIPING AND INSTRUMENTATION DIAGRAM

Drawing Number:	As-Built	Project
ECM20-026-BE-69-UT-13021	--	2
Scale: N.T.S.	Revision No.	

US3510580_46_DR_0059

SYSTEM NAME FOR ROOF LEVEL – BRKBP69–V004–RL19

SYSTEM NAME FOR SECOND LEVEL – BRKBP69–V002–RL19

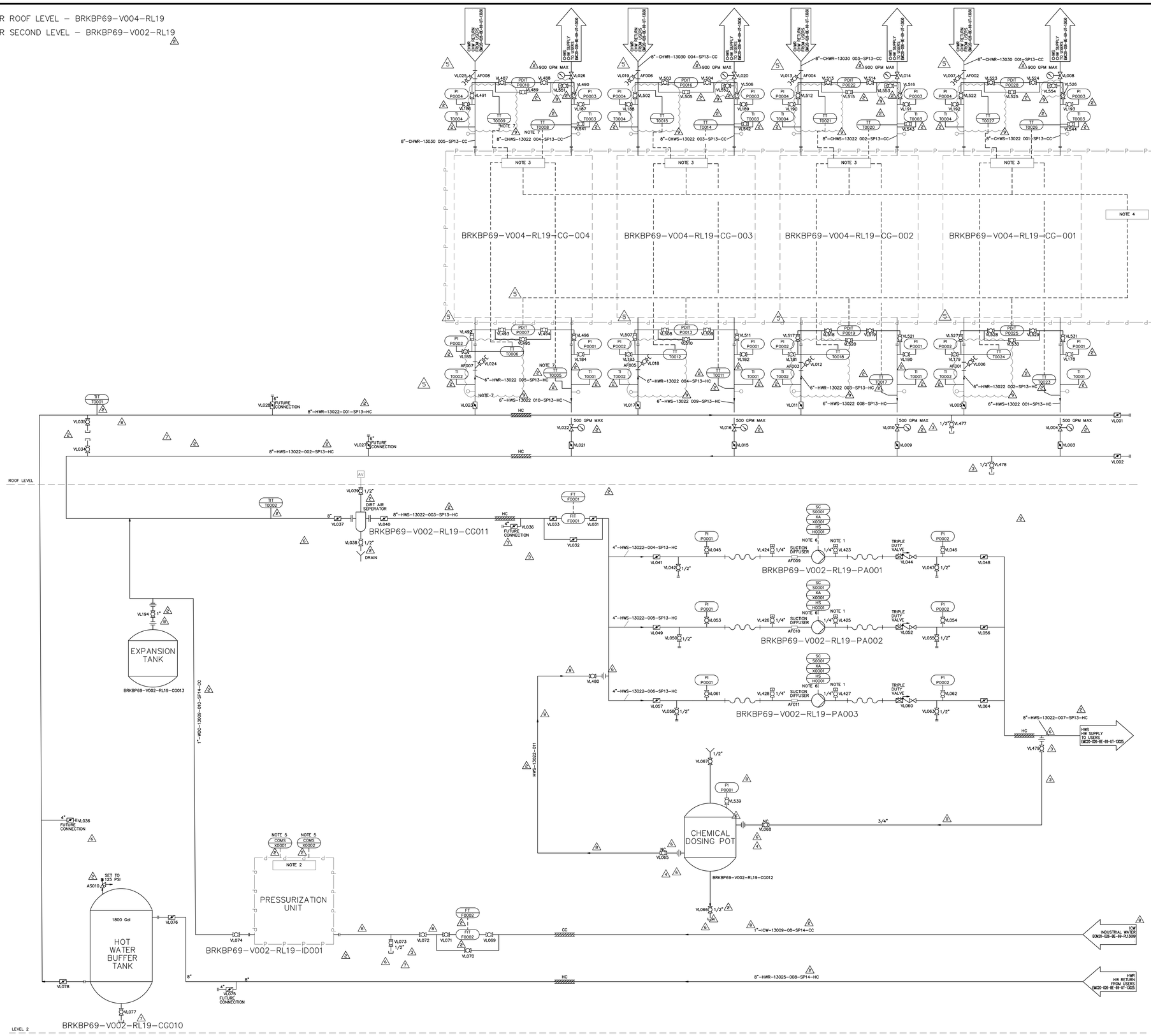

KEYNOTES

1. PROVIDE 1/4" NPT PETE'S PLUG WITH CAP.
2. CONTROL PANEL INCLUDED IN PRESSURIZATION SKID. PRESSURE SENSOR INSTALLED. PROVIDE COMMUNICATION WITH BAS.
3. UNIT CONTROLLER MOUNTED. CONNECT TO MULTIPRO CONTROLLER LOCATED INSIDE THE PENTHOUSE.
4. MULTIPRO CONTROLLER MOUNTED AND LOCATED INSIDE THE PENTHOUSE. CONNECT TO BAS.
5. COMMS LINK SHOULD PROVIDE STATUS AND ENABLE SIGNALS TO BAS.
6. MULTI-PRO CONTROLLER TO CONTROL ALL HEAT PUMP UNITS SEQUENCING, CHILLED WATER & HEATING HOT WATER PUMPS VIA THE SYSTEM DIFFERENTIAL PRESSURES, AND BY-PASS VALVES FOR CHILLED WATER AND HEATING HOT WATER SYSTEMS.
7. LOCATE AS CLOSE TO 30" FROM INTERFACE OF HEAT PUMP AS REASONABLE.

GENERAL NOTES

1. SEE DRAWING ECM20–026–BE–69–UT–13080, EQUIPMENT SCHEDULES FOR EQUIPMENT MODEL AND CAPACITIES.
2. INSTALL ALL EQUIPMENT AND ACCESSORIES PER MANUFACTURER'S INSTRUCTIONS.

Title:

UTILITY AREA
HEATING HOT WATER & CHILLED WATER
GENERATION P&ID

Drawing Number:	As–Built	Project
ECM20–026–BE–69–UT–13022	––	9
Scale: N.T.S.	Revision No.	

US3510580_46_DR_0060

KEYNOTES

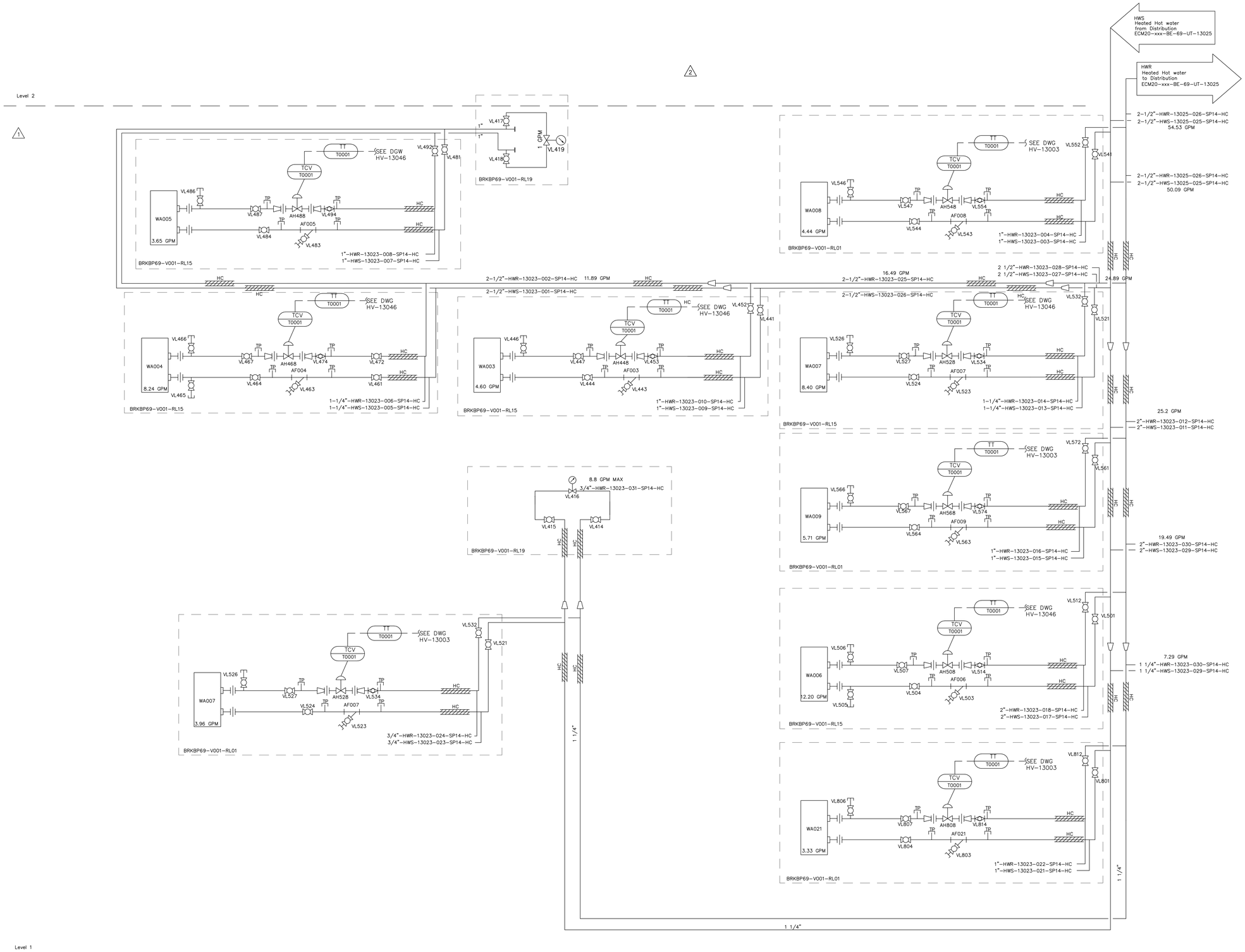

Title:	Level 1 HEATING HOT WATER SYSTEM P&ID
Drawing Number: ECM20-026-BE-69-UT-13023	As-Built: -- / Project: 3
Scale: N.T.S.	Revision No.

US3510580_46_DR_0061

KEYNOTES

1. CONNECT TO MULTIPRO CONTROLLER.
2. HPV – HIGH POINT VENT.

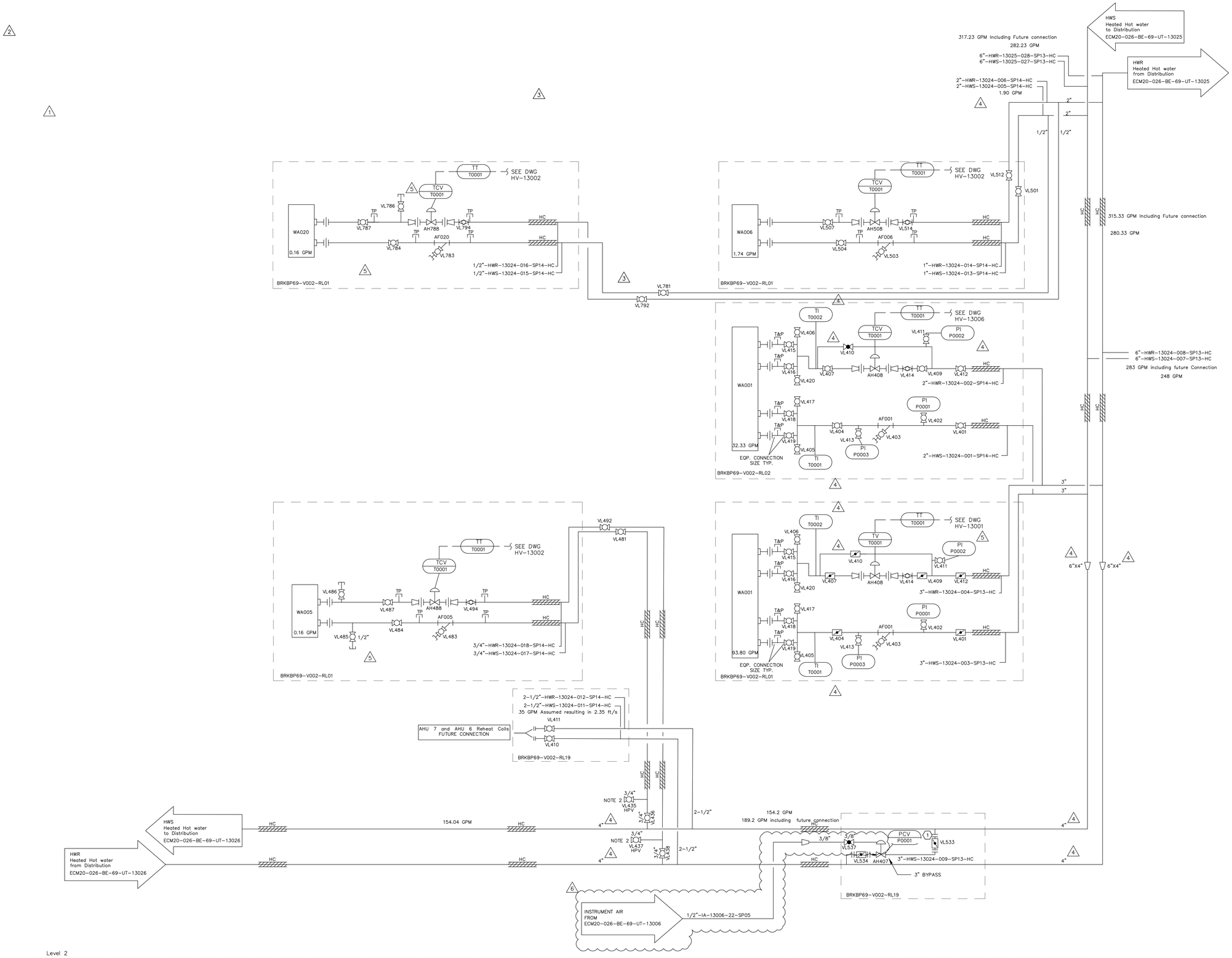

FORMAL ISSUE
CODE

Title:
LEVEL 2
HEATING HOT WATER SYSTEM
P&ID

Drawing Number: ECM20-026-BE-69-UT-13024
As-Built: --
Project: 6
Scale: N.T.S.
Revision No.

US3510580_46_DR_0062

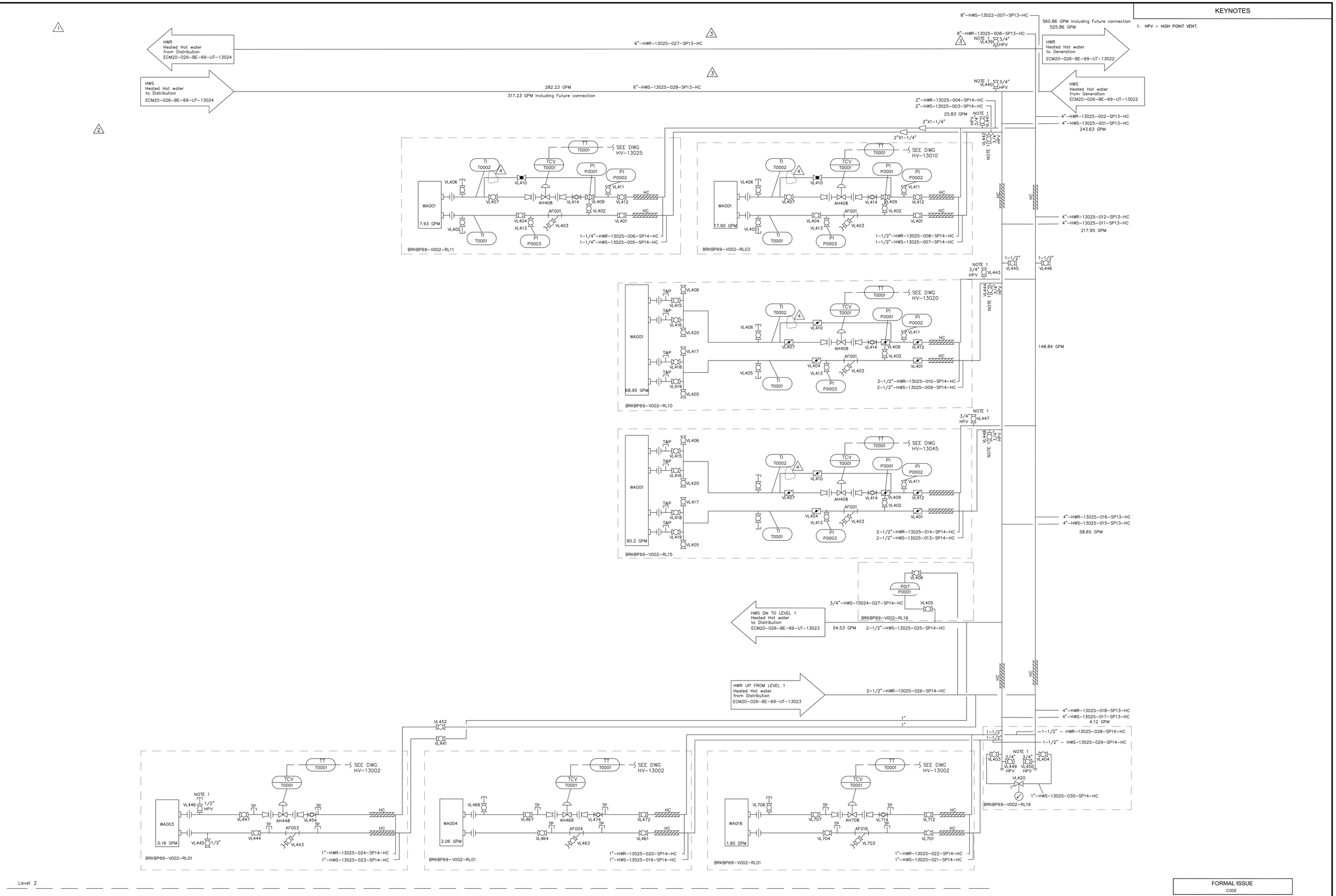

KEYNOTES

1. HPV – HIGH POINT VENT.

FORMAL ISSUE
CODE

Title:
LEVEL 2
HEATING HOT WATER SYSTEM
P&ID

Drawing Number:	As-Built	Project
ECM20-026-BE-69-UT-13025	--	4
Scale: N.T.S.	Revision No.	

US3510580_46_DR_0063

KEYNOTES

1. HPV – HIGH POINT VENT. 2

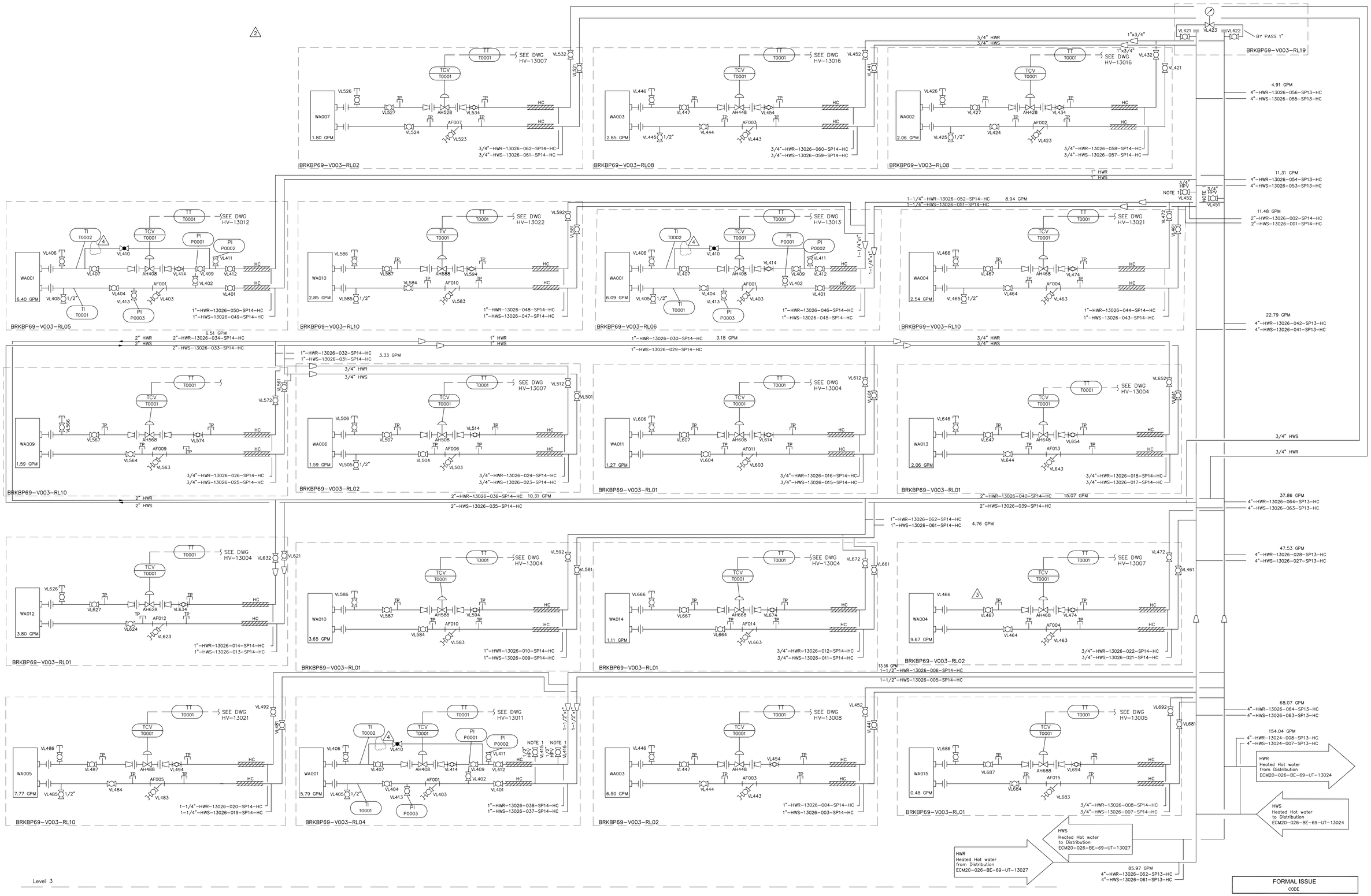

FORMAL ISSUE
CODE

Title:
LEVEL 3
HEATING HOT WATER SYSTEM
P&ID

Drawing Number:	As-Built	Project
ECM20–026–BE–69–UT–13026	— —	4
Scale: N.T.S.	Revision No.	

US35105B0_46_DR_0064

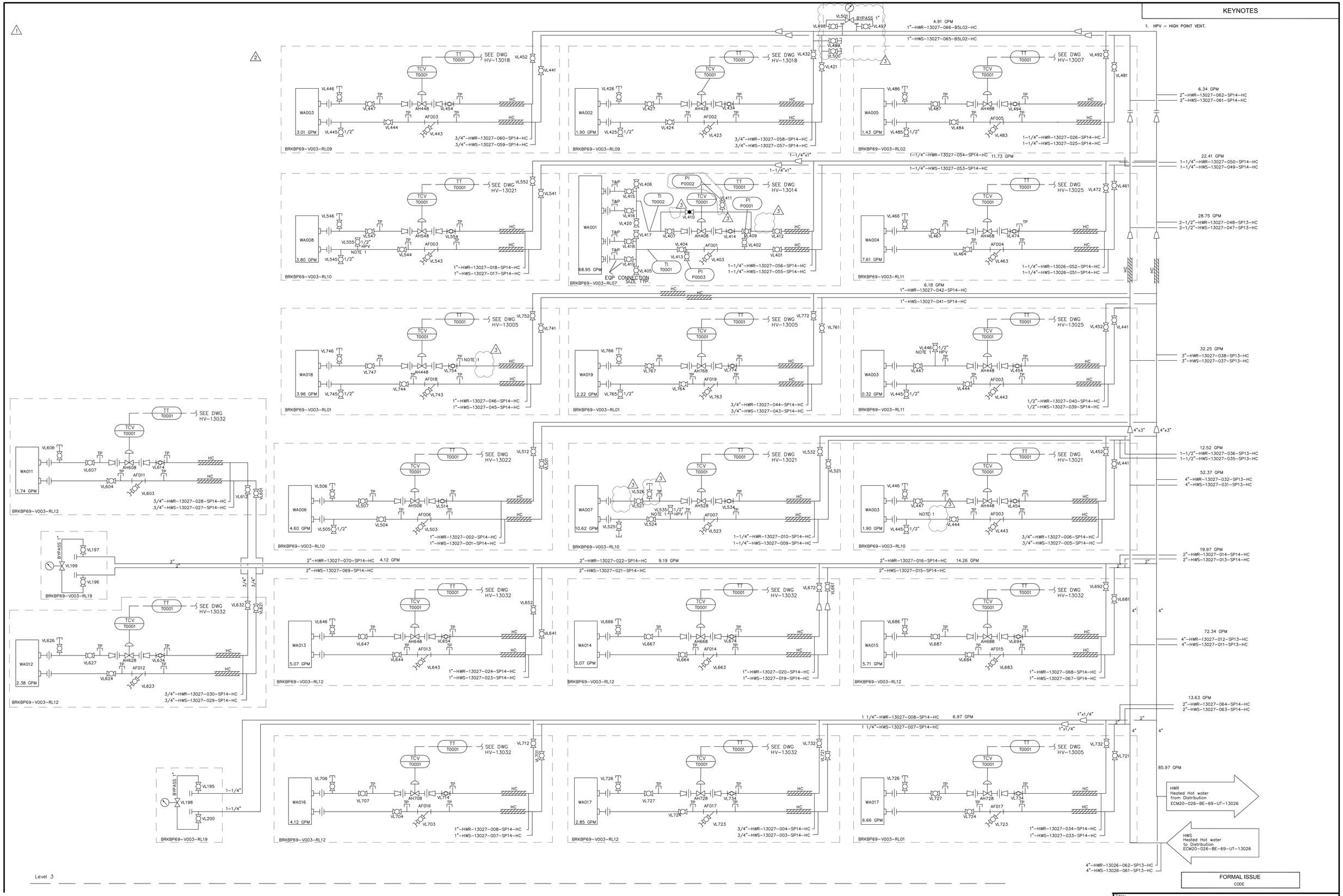
KEYNOTES
1. HPV – HIGH POINT VENT.
4.91 GPM
1"–HWR–13027–066–B5L02–HC
1"–HWS–13027–065–B5L02–HC
BYPASS 1"
6.34 GPM
2"–HWR–13027–062–SP14–HC
2"–HWS–13027–061–SP14–HC
22.41 GPM
1–1/4"–HWR–13027–050–SP14–HC
1–1/4"–HWS–13027–049–SP14–HC
28.75 GPM
2–1/2"–HWR–13027–048–SP13–HC
2–1/2"–HWS–13027–047–SP13–HC
32.25 GPM
3"–HWR–13027–038–SP13–HC
3"–HWS–13027–037–SP13–HC
12.52 GPM
1–1/2"–HWR–13027–036–SP13–HC
1–1/2"–HWS–13027–035–SP13–HC
52.37 GPM
4"–HWR–13027–032–SP13–HC
4"–HWS–13027–031–SP13–HC
19.97 GPM
2"–HWR–13027–014–SP14–HC
2"–HWS–13027–013–SP14–HC
72.34 GPM
4"–HWR–13027–012–SP13–HC
4"–HWS–13027–011–SP13–HC
13.63 GPM
2"–HWR–13027–064–SP14–HC
2"–HWS–13027–063–SP14–HC
85.97 GPM
HWR
Heated Hot water
from Distribution
ECM20–026–BE–69–UT–13026
HWS
Heated Hot water
to Distribution
ECM20–026–BE–69–UT–13026
4"–HWR–13026–062–SP13–HC
4"–HWS–13026–061–SP13–HC
Level 3
FORMAL ISSUE
CODE
Title:
LEVEL 3
HEATING HOT WATER SYSTEM
P&ID
Drawing Number:
ECM20–026–BE–69–UT–13027
As–Built
––
Project
3
Scale: N.T.S.
Revision No.
US3510580_46_DR_0005

GENERAL NOTES

A. SPOOL PIECE TO BE LEFT FOR FUTURE FLOW/ENERGY MEETER INSTALLATION.

KEYNOTES

1. TEMPORARY SPOOL PIECE SHALL BE REMOVED UPON FUTURE USE WHEN GLYCOL IS LIVE. PURPOSE OF SPOOL PIECE IS FOR PNEUMATIC PRESSURE TESTING FOR B69 CT MOD.

2. GAUGE TO REMAIN FOR MONITORING PRESSURE FOR NITROGEN HOLDING CHARGE.

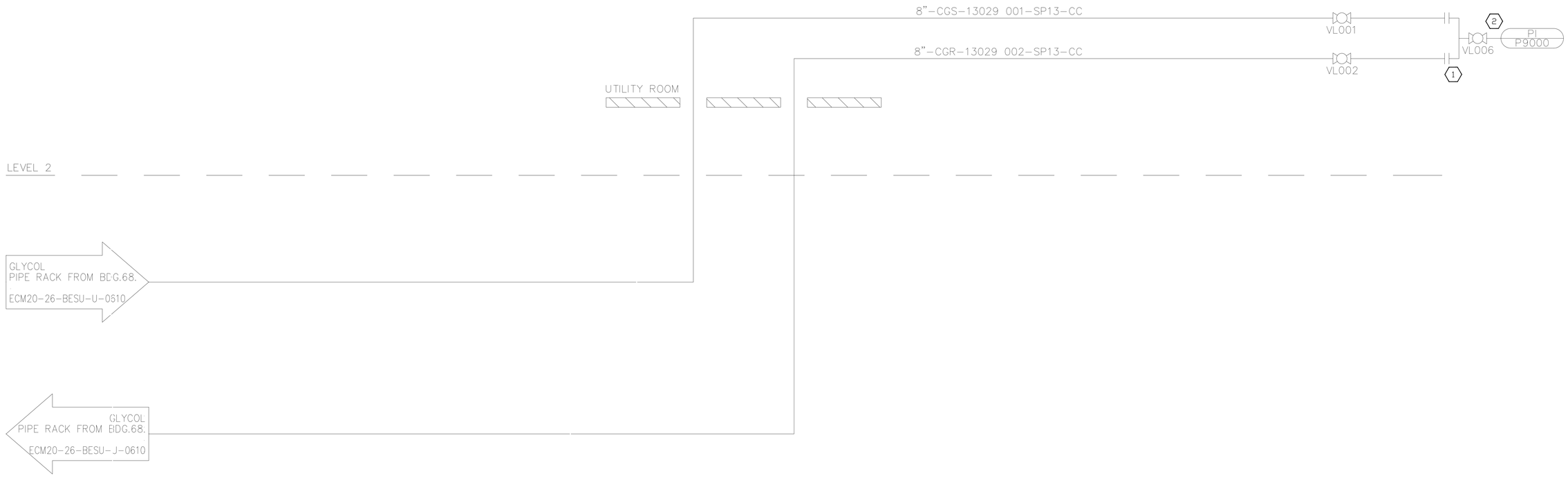

FORMAL ISSUE
20221005.102305 - SANDRO BARRIENTOS

Title:

LEVEL 1 & 2
GLYCOL SCHEMATIC

Drawing Number:	As-Built	Project
ECM20-026-BE-69-UT-13029		1
Scale: N.T.S.	Revision No.	

US3510580_46_DR_0069

SYSTEM NAME FOR ROOF LEVEL – BRKBP69–V004–RL19
SYSTEM NAME FOR SECOND LEVEL – BRKBP69–V002–RL19

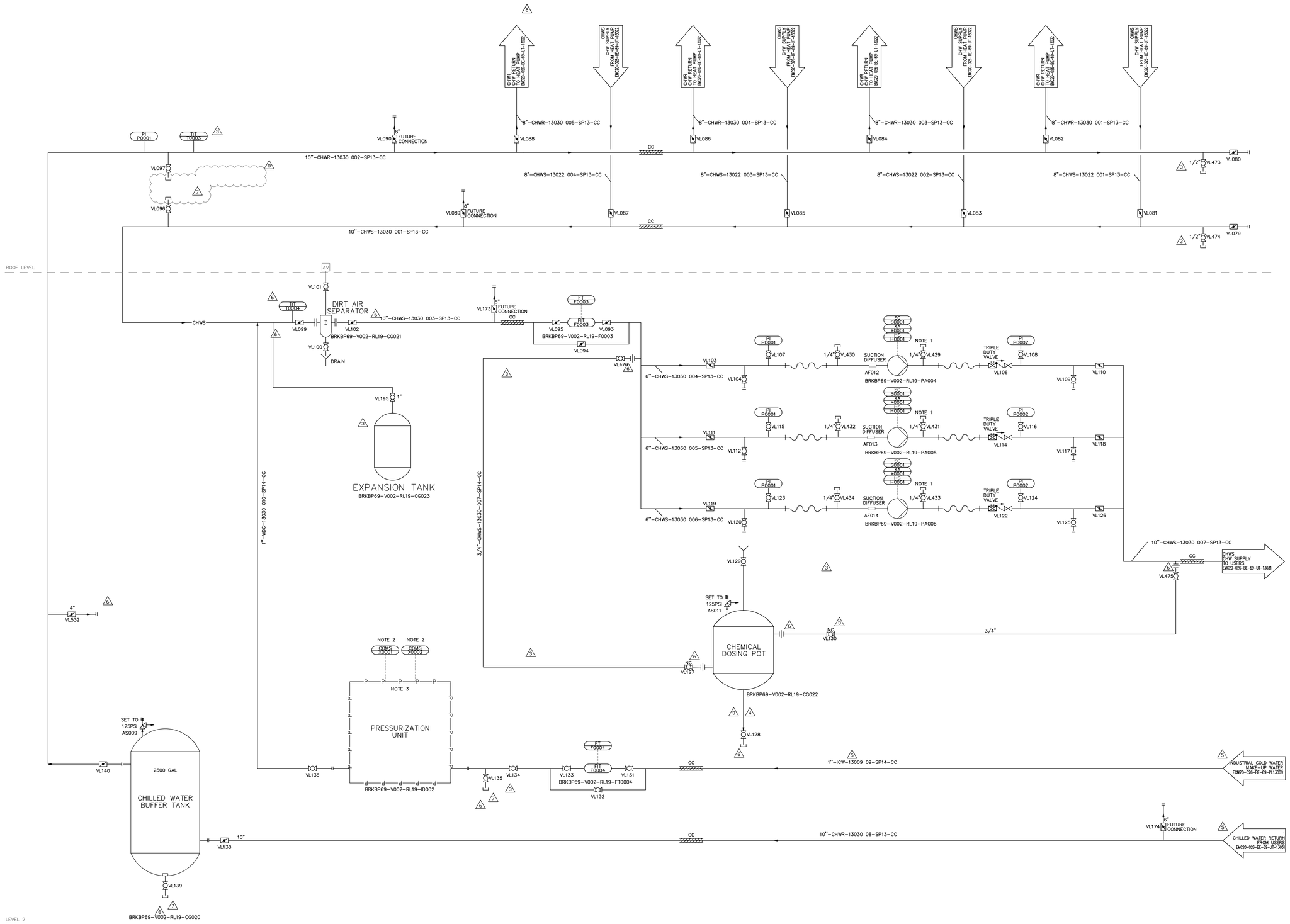

KEYNOTES

1. MULTI-PRO CONTROLLER TO CONTROL ALL HEAT PUMP UNITS SEQUENCING, CHILLED WATER & HEATING HOT WATER PUMPS VIA THE SYSTEM DIFFERENTIAL PRESSURES, AND BY-PASS VALVES FOR CHILLED WATER AND HEATING HOT WATER SYSTEMS.
2. COMMS LINK SHOULD PROVIDE STATUS AND ENABLE SIGNALS TO BAS.
3. CONTROL PANEL INCLUDED IN PRESSURIZATION SKID. PRESSURE SENSOR INSTALLED. PROVIDE COMMUNICATION WITH BAS.

GENERAL NOTES

1. SEE DRAWING ECM20–026–BE–69–UT–13080, EQUIPMENT SCHEDULES FOR EQUIPMENT MODEL AND CAPACITIES.
2. INSTALL ALL EQUIPMENT AND ACCESSORIES PER MANUFACTURER'S INSTRUCTIONS.

FORMAL ISSUE
CODE

Title:
LEVEL 1,2,3
CHILLED WATER
GENERATION P&ID

Drawing Number:	As–Built	Project
ECM20–026–BE–69–UT–13030	––	8
Scale: N.T.S.	Revision No.	

US3510580_46_DR_0070

KEYNOTES

1. HPV - HIGH POINT VENT.

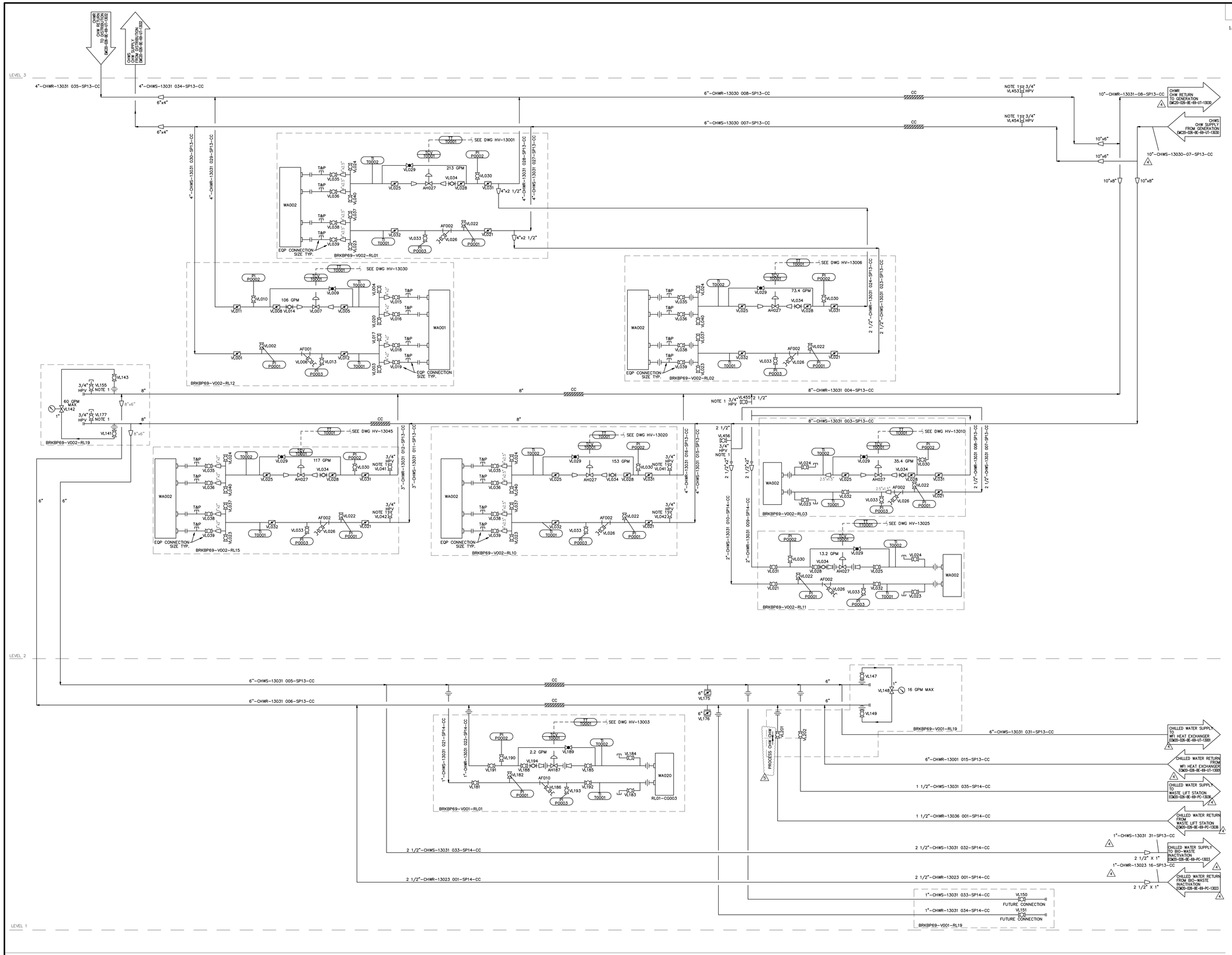

FORMAL ISSUE
CODE

Title:

LEVEL 1,2,3
CHILLED WATER
DISTRIBUTION P&ID

Drawing Number:	As-Built	Project
ECM20-026-BE-69-UT-13031	--	5
Scale: N.T.S.	Revision No.	

US35105B0_46_DR_0071

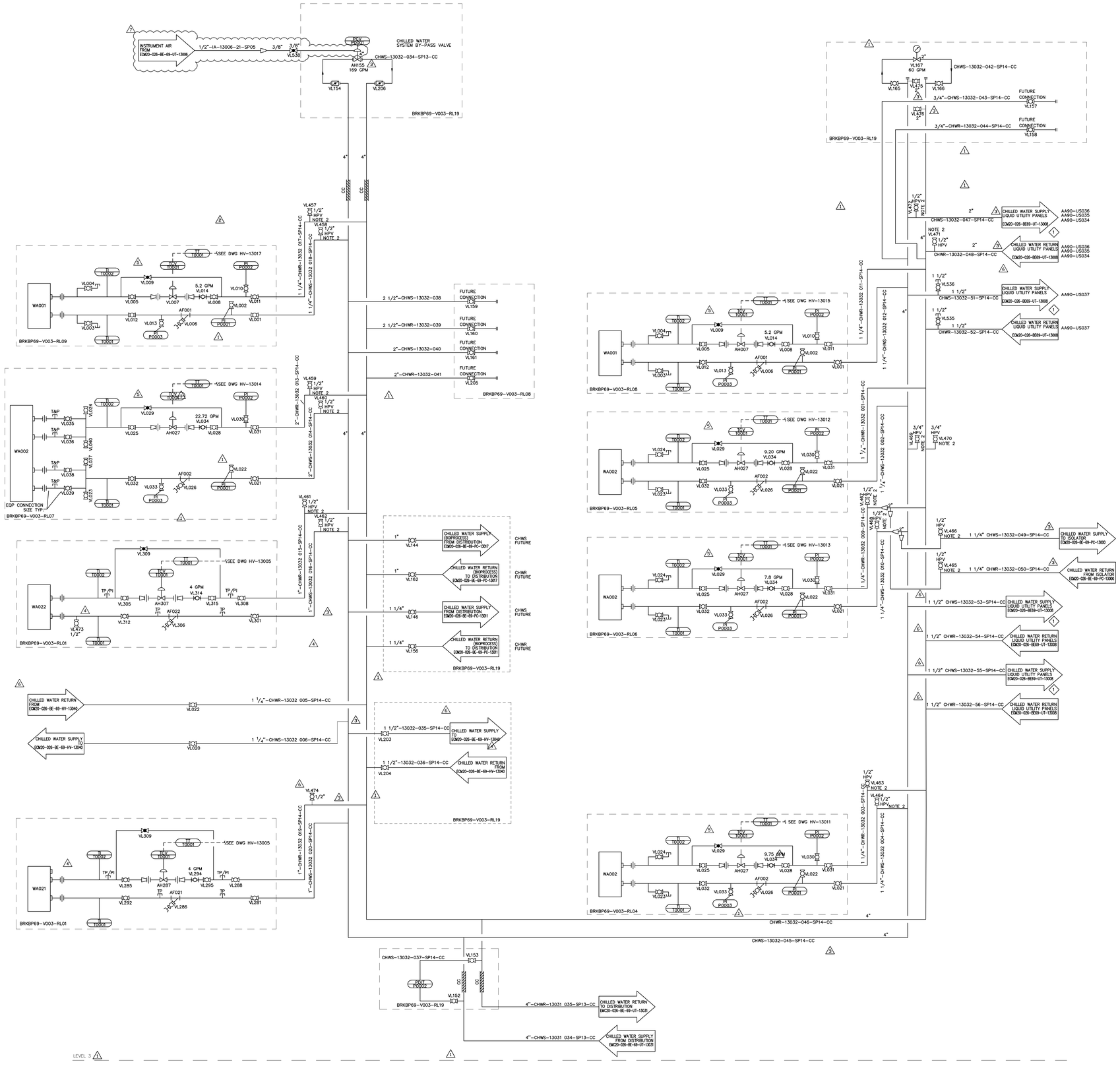

KEYNOTES

1. ATTACHED TO THE RETURN AIR DUCT. SEE AIR FLOW DIAGRAM.
2. HPV - HIGH POINT VENT.

HOLDS

1. FLOWRATE TO BE CONFIRMED BY PROCESS

FORMAL ISSUE
CODE

Title:

LEVEL 3
CHILLED WATER
DISTRIBUTION P&ID

Drawing Number:	As-Built	Project
ECM20-026-BE-69-UT-13032	--	7
Scale: N.T.S.	Revision No.	

US35105B0_46_DR_0072

BRKBP69-V002-DA01

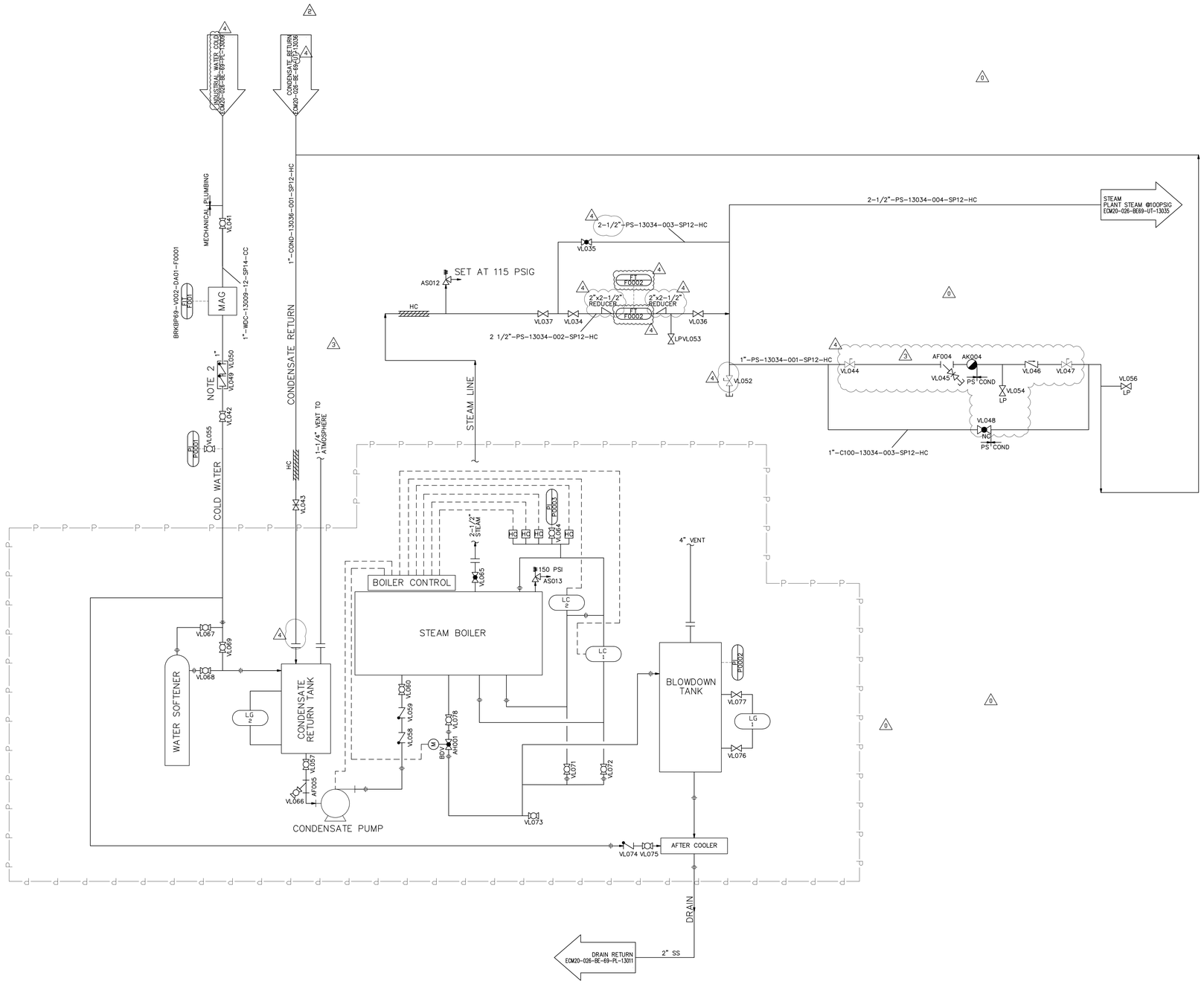

KEYNOTES

1. ALL PIPING MUST COMPLY WITH A.S.M.E. B31-1 POWER PIPING.
2. NO GALVANIZED PIPING FOR THESE SERVICES.

* PLEASE REFER TO THE BOILER INSTRUCTION MANUAL FOR BOILER FEED WATER SPECIFICATION.

GENERAL NOTES

3
- HC - PRESSURE HIGH LIMIT CONTROL.
- LG1 - LEVEL GLASS BLOWDOWN TANK.
- LG2 - LEVEL GLASS CONDENSATE RETURN TANK.
- LC1 - AUTOMATIC WATER REFILL & PRIMARY LOW WATER CUT OFF CONTROLLER W/ LEVEL GLASS.
- LC2 - SECONDARY LOW WATER CUT OFF SENSOR FOR BOILER CONTROLLER.

2
- BDV - AUTOMATICALLY OPERATING FLUSH AND DRAIN VALVE.

HOLDS

FORMAL ISSUE
CODE

Title:
PLANT STEAM GENERATION P&ID

Drawing Number: ECM20-026-BE-69-UT-13034

As-Built | Project 4

Scale: N.T.S.

Revision No.

US3510580_46_DR_0074

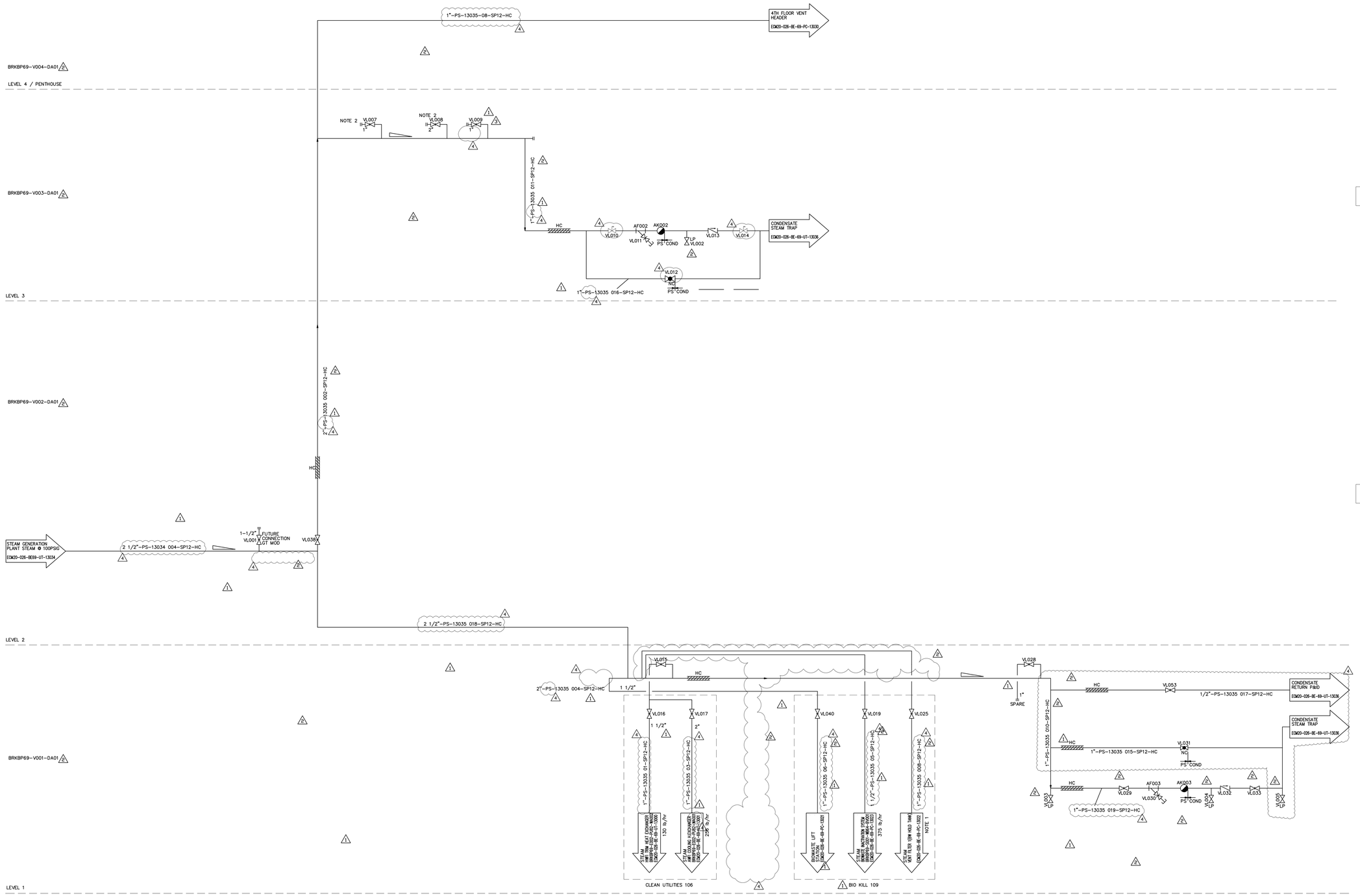

KEYNOTES

1. PEAK LOAD IS MINIMAL.
2. FUTURE CONNECTIONS FOR PARTS WASHER & AUTOCLAVE.

GENERAL NOTES

HOLDS

FORMAL ISSUE
CODE

Title:

PLANT STEAM DISTRIBUTION P&ID

Drawing Number	As-Built	Project
ECM20-026-BE-69-UT-13035	--	4
Scale: N.T.S.	Revision No.	

US35105880_46_DR_0075

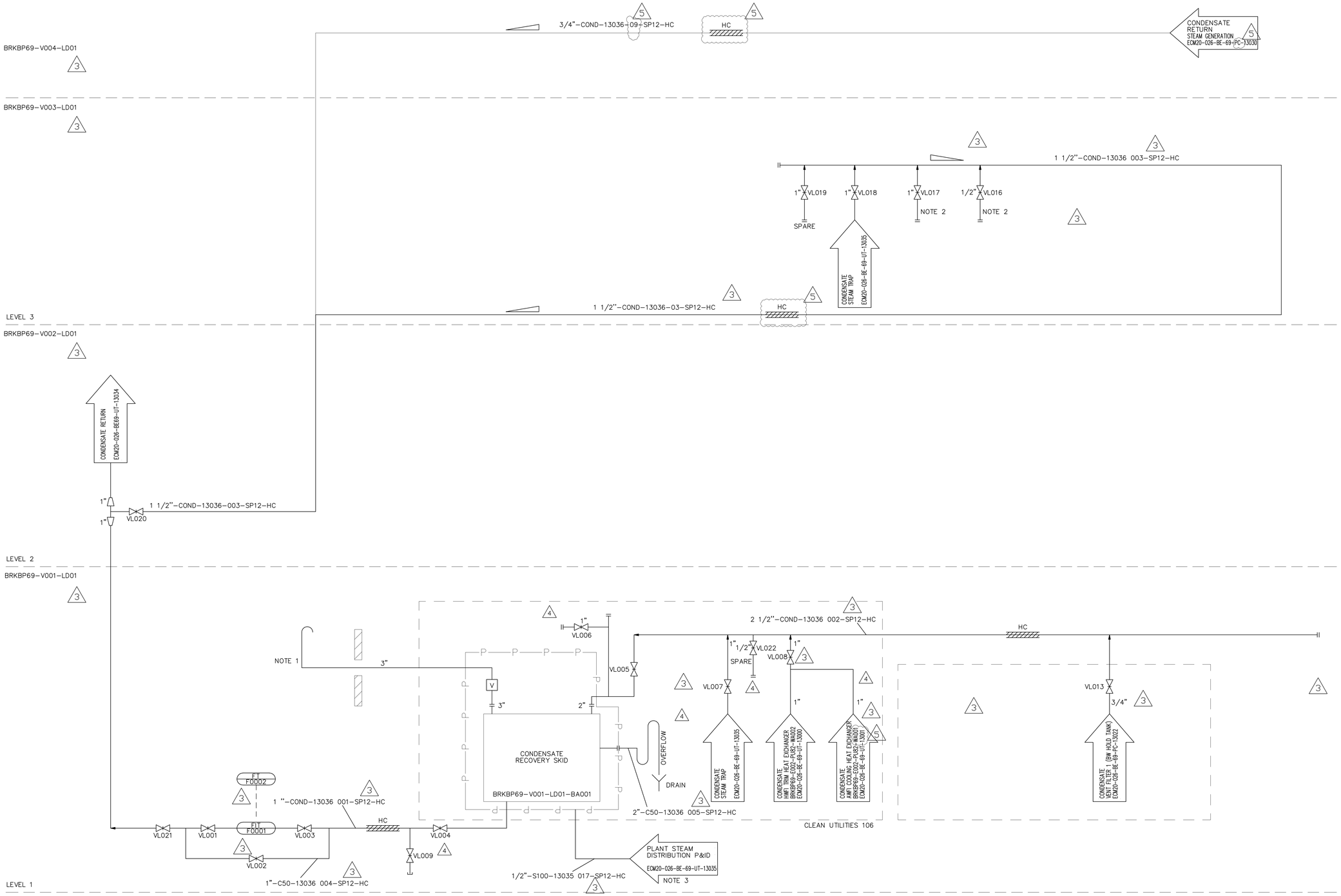

KEYNOTES

GENERAL NOTES

1. VENT TO GO OUTSIDE THE ROOM ON LEVEL 1 TO A SAFE DISCHARGE LOCATION THROUGH A WALL.
2. FUTURE CONNECTIONS FOR PARTS WASHER & AUTOCLAVE.
3. STEAM TO STEAM DRIVEN PUMPS ON THE SKID.
4. OVERFLOW CONDENSATE INDIRECT CONNECTION TO DRAIN SHALL BE IN COMPLIANCE WITH 2019 CPC SECTION 810.

HOLDS

FORMAL ISSUE
CODE

Title:
CONDENSATE RETURN P&ID

Drawing Number:	As-Built	Project
ECM20-026-BE-69-UT-13036		5
Scale: N.T.S.	Revision No.	

US3510580_46_DR_0076

HEAT PUMPS

TAG NO.	LOCATION	MANUFACTURER AND MODEL NUMBER	TYPE	REFRIGERANT TYPE & CHARGE PER UNIT (LBS)	EVAPORATOR (COOLING ONLY MODE) COOLING CAPACITY (TONS)	FLUID TYPE	COOLING ONLY COP	ENTERING TEMP (F)	LEAVING TEMP (F)	FLOW RATE (GPM)	MINIMUM FLOW RATE (GPM)	dP (FT H2O)	CONDENSER (HEATING ONLY MODE) HEATING CAPACITY (MBH)	FLUID TYPE	HEATING ONLY COP	ENTERING TEMP(F)	LEAVING TEMP(F)	FLOWRATE (GPM)	MINIMUM FLOWRATE (GPM)	dP (FT H20)	EVAPORATOR (SIMULTANEOUS HEATING AND COOLING MODE) COOLING CAPACITY (TONS)	SIMULTANEOUS COOLING COP	ENTERING TEMP(F)	LEAVING TEMP(F)	MAX FLOWRATE (GPM)	dP (FT H20)	CONDENSER (SIMULTANEOUS HEATING AND COOLING MODE) HEATING CAPACITY (MBH)	SIMULTANEOUS HEATING COP	ENTERING TEMP(F)	LEAVING TEMP(F)	FLOWRATE (GPM)	dP (FT H20)
BRKBP69-V004-RL19-CG001	ROOF	MULTISTACK ARA060XNHCNABAR21--DLAGAAIWCA--A(3MODULES)	MODULAR SCROLL	R410A/645 LBS (215 LBS / MODULE)	180	WATER	3.1	58	45	340.5	45	8.23	1758	WATER	2.4	100	115	234.3	60	7.35	185.9	8.3	58	45	342.9	8.23	2842	8.3	100	115	378.9	7.35
BRKBP69-V004-RL19-CG002	ROOF	MULTISTACK ARA060XNHCNABAR21--DLAGAAIWCA--A(3MODULES)	MODULAR SCROLL	R410A/645 LBS (215 LBS / MODULE)	180	WATER	3.1	58	45	340.5	45	8.23	1758	WATER	2.4	100	115	234.3	60	7.35	185.9	8.3	58	45	342.9	8.23	2842	8.3	100	115	378.9	7.35
BRKBP69-V004-RL19-CG003	ROOF	MULTISTACK ARA060XNHCNABAR21--DLAGAAIWCA--A(3MODULES)	MODULAR SCROLL	R410A/645 LBS (215 LBS / MODULE)	180	WATER	3.1	58	45	340.5	45	8.23	1758	WATER	2.4	100	115	234.3	60	7.35	185.9	8.3	58	45	342.9	8.23	2842	8.3	100	115	378.9	7.35
BRKBP69-V004-RL19-CG004	ROOF	MULTISTACK ARA060XNHCNABAR21--DLAGAAIWCA--A(3MODULES)	MODULAR SCROLL	R410A/645 LBS (215 LBS / MODULE)	180	WATER	3.1	58	45	340.5	45	8.23	1758	WATER	2.4	100	115	234.3	60	7.35	185.9	8.3	58	45	342.9	8.23	2842	8.3	100	115	378.9	7.35

NOTE:

1. EACH UNIT REQUIRES SEPARATE POWER SUPPLY (ONE FOR THREE MODULES)

HEAT PUMPS SCHEDULE CONT.

TAG NO.	FLUID	AIR-SOURCE COIL DATA COOLING MODE AMBIENT MIN (°F)	COOLING MODE AMBIENT MAX (°F)	HEATING MODE AMBIENT MIN (°F)	HEATING MODE AMBIENT MAX (°F)	MIN. FLOW (GPM) COND.	MIN. FLOW (GPM) EVAP.	COIL	FINS	COATING	FAN MOTOR ECM (Y/N)	ELECTRIC SERVICE INPUT KW	STANDBY POWER (Y/N)	MCA	MOCP	V / PH / HZ	VFD	OPERATING WEIGHT (LBS)	A- WEIGHTED SPL (dBA)	NOTES
BRKBP69-V004-RL19-CG001	AIR	60	95	33	55	77	112.5	COPPER	COPPER	HERESITE	Y	211.7	N	440	500	480 / 3 / 60	N	22440	89 @ 3.28 FT	SEE DATA SHEETS, MATERIAL REQUISITION AND HEAT PUMP SPECIFICATIONS FOR ADDITION INFORMATION.
BRKBP69-V004-RL19-CG002	AIR	60	95	33	55	77	112.5	COPPER	COPPER	HERESITE	Y	211.7	N	440	500	480 / 3 / 60	N	22440	89 @ 3.28 FT	SEE DATA SHEETS, MATERIAL REQUISITION AND HEAT PUMP SPECIFICATIONS FOR ADDITION INFORMATION.
BRKBP69-V004-RL19-CG003	AIR	60	95	33	55	77	112.5	COPPER	COPPER	HERESITE	Y	211.7	N	440	500	480 / 3 / 60	N	22440	89 @ 3.28 FT	SEE DATA SHEETS, MATERIAL REQUISITION AND HEAT PUMP SPECIFICATIONS FOR ADDITION INFORMATION.
BRKBP69-V004-RL19-CG004	AIR	60	95	33	55	77	112.5	COPPER	COPPER	HERESITE	Y	211.7	N	440	500	480 / 3 / 60	N	22440	89 @ 3.28 FT	SEE DATA SHEETS, MATERIAL REQUISITION AND HEAT PUMP SPECIFICATIONS FOR ADDITION INFORMATION.

HEAT PUMP NOTES:

1. SEE HEAT PUMP DATA SHEETS (US3510580-46-DS-101), MATERIAL REQUISITION (US3510580-46-MR-101), AND SPECIFICATIONS (US3510580-46-SP-101).
2. EACH UNIT HAS THREE MODULES AT 60-TON COOLING CAPACITY PER MODULE.
3. PROVIDE EACH UNIT WITH UNIT CONTROLS.
4. PROVIDE ONE MASTER CONTROLLER TO CONTROL THE 5 UNITS (1 ADDITIONAL UNIT FOR FUTURE), INCLUDING THE CHILLED WATER AND HEATING HOT WATER PUMPS. PROVIDE MODBUS COMMUNICATIONS LINK TO BMS.
5. HEAT PUMP WILL USE WATER AS HEAT EXCHANGE FLUID. PROVIDE FREEZE PROTECTION CONTROL SEQUENCE.
6. SET-UP CONTROL TO ALLOW MAXIMUM OF ONE MODULE ON DEFROST MODE AT A TIME.
7. PROVIDE EACH UNIT ON A SKID COMPLETE WITH ELECTRICAL AND CONTROL PANELS. PROVIDE SINGLE POINT OF CONNECTION FOR ELECTRICAL PER UNIT.

* VENDOR TO CONFIRM UNIT POWER REQUIREMENT

PUMPS.

PRODUCT TAG.	P&ID NO.	LOCATION	SERVICE	MANUFACTURER	MODEL	TYPE	FLUID FLOW RATE (GPM)	FLUID WORKING FLUID	FLUID TDH (FT)	PUMP EFFICIENCY (%)	PUMP DOE BASIC MODEL	PUMP CONSTRUCTION	ELECTRICAL BHP	ELECTRICAL MOTOR SPEED (RPM)	ELECTRICAL MOTOR HP	ELECTRICAL V / PH / HZ	VFD (Y/N)	NOTES
RL19-PA001	US3510580-46-DR-0060	LEVEL-2	HEATING HOT WATER	TACO (Note 9)	FI4009D	BASE-MOUNTED END SUCTION PUMPS	480	WATER	78	79%	FI4009D-4P-PM	IRON	11.9	1760	20	460/3/60	Y	1,2,8,10
RL19-PA002	US3510580-46-DR-0060	LEVEL-2	HEATING HOT WATER	TACO (Note 9)	FI4009D	BASE-MOUNTED END SUCTION PUMPS	480	WATER	78	79%	FI4009D-4P-PM	IRON	11.9	1760	20	460/3/60	Y	1,2,8,10
RL19-PA003	US3510580-46-DR-0060	LEVEL-2	HEATING HOT WATER	TACO (Note 9)	FI4009D	BASE-MOUNTED END SUCTION PUMPS	480	WATER	78	79%	FI4009D-4P-PM	IRON	11.9	1760	20	460/3/60	Y	1,2,8,10
RL19-PA004	US3510580-46-DR-0070	LEVEL-2	CHILLED WATER	TACO (Note 9)	FI4011C	BASE-MOUNTED END SUCTION PUMPS	555	WATER	118	80%	FI4011C-4P-PM	IRON	20.61	1760	30	460/3/60	Y	1,2,8,10
RL19-PA005	US3510580-46-DR-0070	LEVEL-2	CHILLED WATER	TACO (Note 9)	FI4011C	BASE-MOUNTED END SUCTION PUMPS	555	WATER	118	80%	FI4011C-4P-PM	IRON	20.61	1760	30	460/3/60	Y	1,2,8,10
RL19-PA006	US3510580-46-DR-0070	LEVEL-2	CHILLED WATER	TACO (Note 9)	FI4011C	BASE-MOUNTED END SUCTION PUMPS	555	WATER	118	80%	FI4011C-4P-PM	IRON	20.61	1760	30	460/3/60	Y	1,2,8,10
RL19-ID001-PA001	US3510580-46-DR-0070	LEVEL-2	MAKE-UP WATER-CHW	TACO (Note 9)	DFM060400CVAD HVAAJ1AAA00	VERTICAL MULTI-STAGE PUMPS (DUPLEX ON SKID)	25	WATER	34	60%	6VR04-00316SS	STAINLESS STEEL	0.4	2303	1.5	115/1/60	Y	2,3,5,6,8
RL19-ID001-PA002	US3510580-46-DR-0070	LEVEL-2	MAKE-UP WATER-CHW	TACO (Note 9)		VERTICAL MULTI-STAGE PUMPS (DUPLEX ON SKID)	25	WATER	34	60%	6VR04-00316SS	STAINLESS STEEL	0.4	2303	1.5	115/1/60	Y	2,3,5,6,8
RL19-ID002-PA001	US3510580-46-DR-0060	LEVEL-2	MAKE-UP WATER-HW	TACO (Note 9)	DFM060400CVAD HVAAJ1AAA00	VERTICAL MULTI-STAGE PUMPS (DUPLEX ON SKID)	25	WATER	34	60%	6VR04-00316SS	STAINLESS STEEL	0.4	2303	1.5	115/1/60	Y	2,3,5,6,8
RL19-ID002-PA002	US3510580-46-DR-0060	LEVEL-2	MAKE-UP WATER-HW	TACO (Note 9)		VERTICAL MULTI-STAGE PUMPS (DUPLEX ON SKID)	25	WATER	34	60%	6VR04-00316SS	STAINLESS STEEL	0.4	2303	1.5	115/1/60	Y	2,3,5,6,8

NOTE :
1. PROVIDE WITH DRAIN PAN.
2. PROVIDE WITH TEFC PREMIUM EFFICIENT MOTOR FOR VFD USE.
3. RL19-ID001-PA001 AND RL19-ID001-PA002 ARE ON ONE SKID.
4. RL19-ID002-PA001 AND RL19-ID001-PA002 ARE ON ONE SKID.
5. CONSTANT PRESSURE MODE. ONE PUMP DUTY, THE OTHER PUMP STANDBY.
6. PROVIDE CONTROLS AND CONNECTION TO BAS (MODBUS).
7. NOT USED.
8. INSTALL PER MANUFACTURER'S INSTRUCTIONS.
9. MANUFACTURE BASED ON INITIAL SELECTION TO BE CONFIRMED DURING TENDER PROCESS.
10. SUCTION DIFFUSER PROVIDED BY VENDOR.

AIR SEPARATOR

PRODUCT TAG.	P&ID NO.	LOCATION	SERVICE	MANUFACTURER	MODEL	FLUID FLOW RATE (GPM)	FLUID ACTUAL HEAD(FT)	FLUID CONNECTION SIZE (IN)	PHYSICAL DIA. / HEIGHT (IN)	NOTES
RL19-CG021	US3510580-46-DR-0070	LEVEL 2	CHILLED WATER	TACO	4910A-125	1110	2.77	10	24.00 x 47.75	1,2,3
RL19-CG011	US3510580-46-DR-0060	LEVEL 2	HEATING HOT WATER	TACO	4908AH-125	960	1.42	8	24.00 x 47.50	1,2,3

NOTE 1: PROVIDE WITH 304SS PALL RINGS.
NOTE 2: PROVIDE WITH FLUSH VALVE.
NOTE 3: PROVIDE WITH AUTO AIR VENT.

CHEMICAL POT FEEDER

PRODUCT TAG.	P&ID NO.	SERVICE	MANUFACTURER	MODEL	VOLUME (GAL)	CONSTRUCTION	CONNECTION SIZE (IN)	WEIGHT (LBS)	NOTES
RL19-CG012	US3510580-46-DR-0060	HEATING HOT WATER	JL WINGERT	12 HD	12.76	CARBON STEEL	0.75	58	1,2
RL19-CG023	US3510580-46-DR-0070	CHILLED WATER	JL WINGERT	5 HD	5.79	CARBON STEEL	0.75	58	1,2

NOTE 1: PROVIDE WITH VALVE PACKAGE AND FILL FUNNEL.
NOTE 2: RATED FOR 200 PSI @ 200F MAX.

GENERAL NOTES

1. INSTALL ALL EQUIPMENT PER MANUFACTURER'S INSTALLATION INSTRUCTIONS.
2. PROVIDE ANCHORS AS NEEDED TO SEISMICALY SUPPORT HYDRONIC EQUIPMENT ON FLOOR/STRUCTURE. PROVIDE STRUCTURAL CALCULATION SIGNED BY A CALIFORNIA LICENSED CIVIL OR STRUCTURAL ENGINEER.
3. PROVIDE EQUIPMENT COMPLETE WITH CONTROLS TO DELIVER COMPLETE WORKING SYSTEMS TO BAYER.

SUCTION DIFFUSER (FOR CHILLED & HEATING HOT WATER PUMPS)

PRODUCT TAG.	MANUFACTURER	MODEL	TYPE	BODY CONSTRUCTION	FLUID FLOW RATE (GPM)	FLUID HEAD LOSS (FT)	PHYSICAL CONNECT SIZE (IN)	NOTES
RL19-PA001	TACO	SD060050-5	FLANGED	DUCTILE IRON	480	24	6X5	
RL19-PA002	TACO	SD060050-5	FLANGED	DUCTILE IRON	480	24	6X5	
RL19-PA003	TACO	SD060050-5	FLANGED	DUCTILE IRON	480	24	6X5	
RL19-PA004	TACO	SD060050-5	FLANGED	DUCTILE IRON	555	30	6X5	
RL19-PA005	TACO	SD060050-5	FLANGED	DUCTILE IRON	555	30	6X5	
RL19-PA006	TACO	SD060050-5	FLANGED	DUCTILE IRON	555	30	6X5	

EXPANSION TANK

PRODUCT TAG.	P&ID NO.	MANUFACTURER	MODEL	TYPE	FLUID WORKING FLUID	FLUID VOLUME (GAL)	MAXIMUM ALLOWABLE WORKING PRESSURE (PSI)	DIA./HEIGHT (IN)	NPT FITTING (IN)	NOTES
RL19CG013	US3510580-46-DR-0060	TACO	CA215-125	BLADEER TYPE	WATER (CHW)	57	125	20X64	1"	
RL19CG023	US3510580-46-DR-0070	TACO	CA215-125	BLADEER TYPE	WATER (HW)	57	125	20X64	1"	

BUFFER TANK SCHEDULE

PRODUCT TAG.	P&ID NO.	SERVICE	MANUFACTURER	MODEL	VOLUME (GAL)	CONSTRUCTION	THERMAL INSULATION	CONNECTION SIZE (IN)	WEIGHT (LBS)	NOTES
RL19-CG010	US3510580-46-DR-0060	HW	TACO	BTH1750F08-125HA	1750	CARBON STEEL	HEATING WATER 1" SILICON BLANKET	8	3340	1,3
RL19-CG020	US3510580-46-DR-0070	CHW	TACO	BTH2500F10-125CA	2500	CARBON STEEL	CHILLED WATER 1/2" ARMAFLEX	10	5340	1,3

Title:

HYDRONIC SYSTEM
EQUIPMENT SCHEDULES

Drawing Number: ECM20-026-BE-69-UT-13080
As-Built: Project 0
Scale: N.T.S.
Revision No.

US3510580_46_DR_0120

NOTES

1.SEAL PIPE PENETRATIONS THROUGH FLOORS
2.SLOPES FOR PIPEWORK TO BE 1/8" PER 100 FEET.
3.ALL PIPEWORK TO BE CO-ORDINATED WITH OTHER TRADES.

LEGEND

PLANT STEAM (S60)
PLANT CONDENSATE (C60)
CHILLED WATER SUPPLY (CWS)
CHILLED WATER RETURN (CWR)
HEATED HOT WATER SUPPLY (HWS)
HEATED HOT WATER RETURN (HWR)
CHILLED GLYCOL SUPPLY (CGS)
CHILLED GLYCOL RETURN (CGR)

Title: LEVEL 1 HIGH LEVEL HYDRONIC SYSTEM LAYOUT PIPING FLOOR PLAN			
Drawing Number:	ECM-20-026-BE-69-UT-13081	As-Built	Project 0
Scale:	1/8" = 1'-0"	Revision No.	

US3510580-46-DR-0121

NOTES

1.SEAL PIPE PENETRATIONS THROUGH FLOORS
2.SLOPES FOR PIPEWORK TO BE 1/8" PER 100 FEET.
3.ALL PIPEWORK TO BE CO-ORDINATED WITH OTHER TRADES.

LEGEND

PLANT STEAM (S60)
PLANT CONDENSATE (C60)
CHILLED WATER SUPPLY (CWS)
CHILLED WATER RETURN (CWR)
HEATED HOT WATER SUPPLY (HWS)
HEATED HOT WATER RETURN (HWR)
CHILLED GLYCOL SUPPLY (CGS)
CHILLED GLYCOL RETURN (CGR)

Title: LEVEL 2 HIGH LEVEL HYDRONIC SYSTEM LAYOUT PIPING FLOOR PLAN			
Drawing Number:	ECM-20-026-BE-69-UT-13082	As-Built	Project 0
Scale:		Revision No.	

US3510580-46-DR-0122

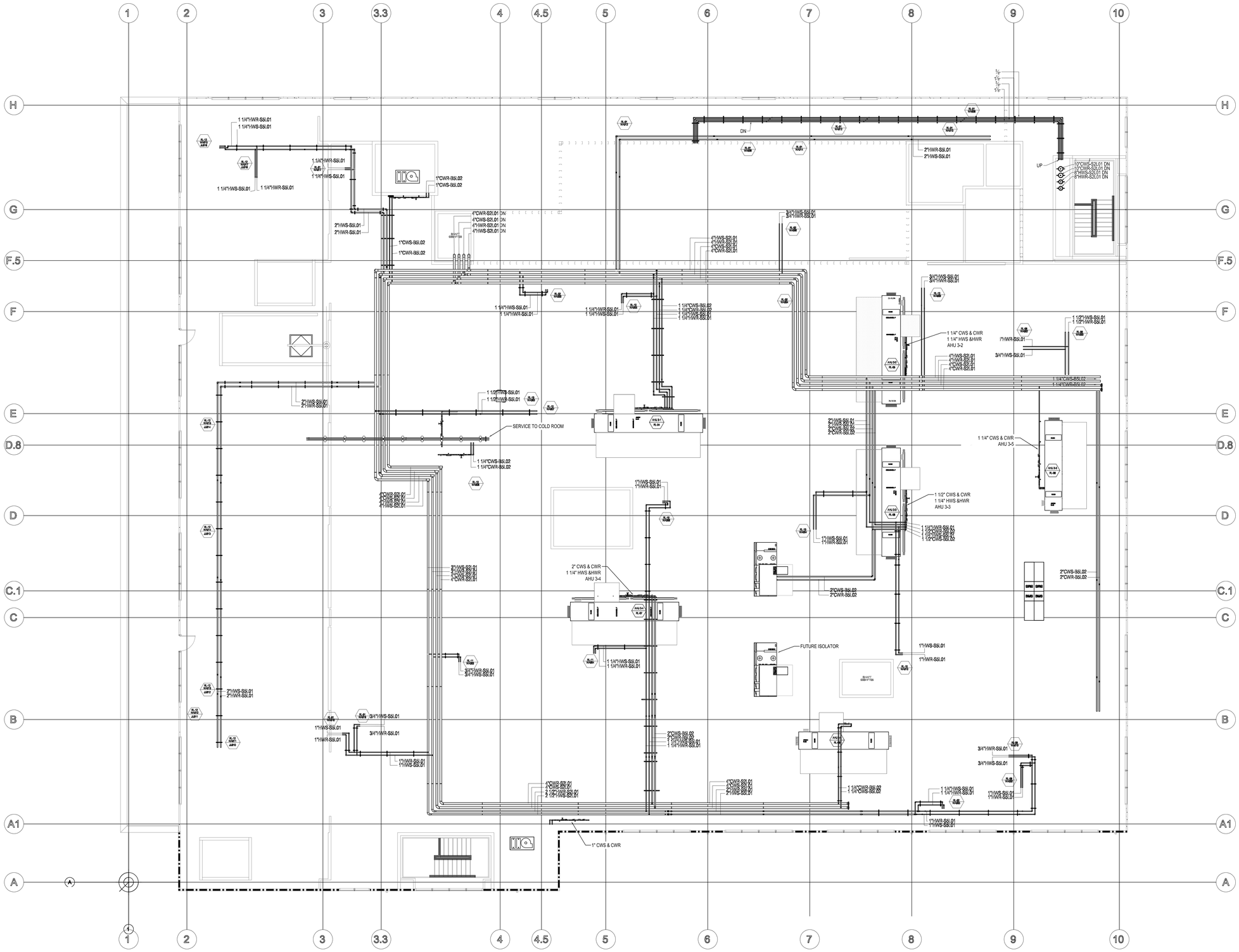

NOTES

1.SEAL PIPE PENETRATIONS THROUGH FLOORS
2.PROVIDE PIPE SUPPORTS PER LATEST SMACNA SEISMIC RESTRAINT MANUAL GUIDELINES FOR MECHANICAL SYSTEM.

LEGEND

PLANT STEAM (S60)
PLANT CONDENSATE (C60)
CHILLED WATER SUPPLY (CWS)
CHILLED WATER RETURN (CWR)
HEATED HOT WATER SUPPLY (HWS)
HEATED HOT WATER RETURN (HWR)
CHILLED GLYCOL SUPPLY (CGS)
CHILLED GLYCOL RETURN (CGR)

Title: LEVEL 3.5 HIGH LEVEL HYDRONIC SYSTEM LAYOUT PIPING FLOOR PLAN			
Drawing Number:	ECM-20-026-BE-69-UT-13083	As-Built	Project 0
Scale:	1/8" = 1'-0"	Revision No.	

US3510580-46-DR-0123

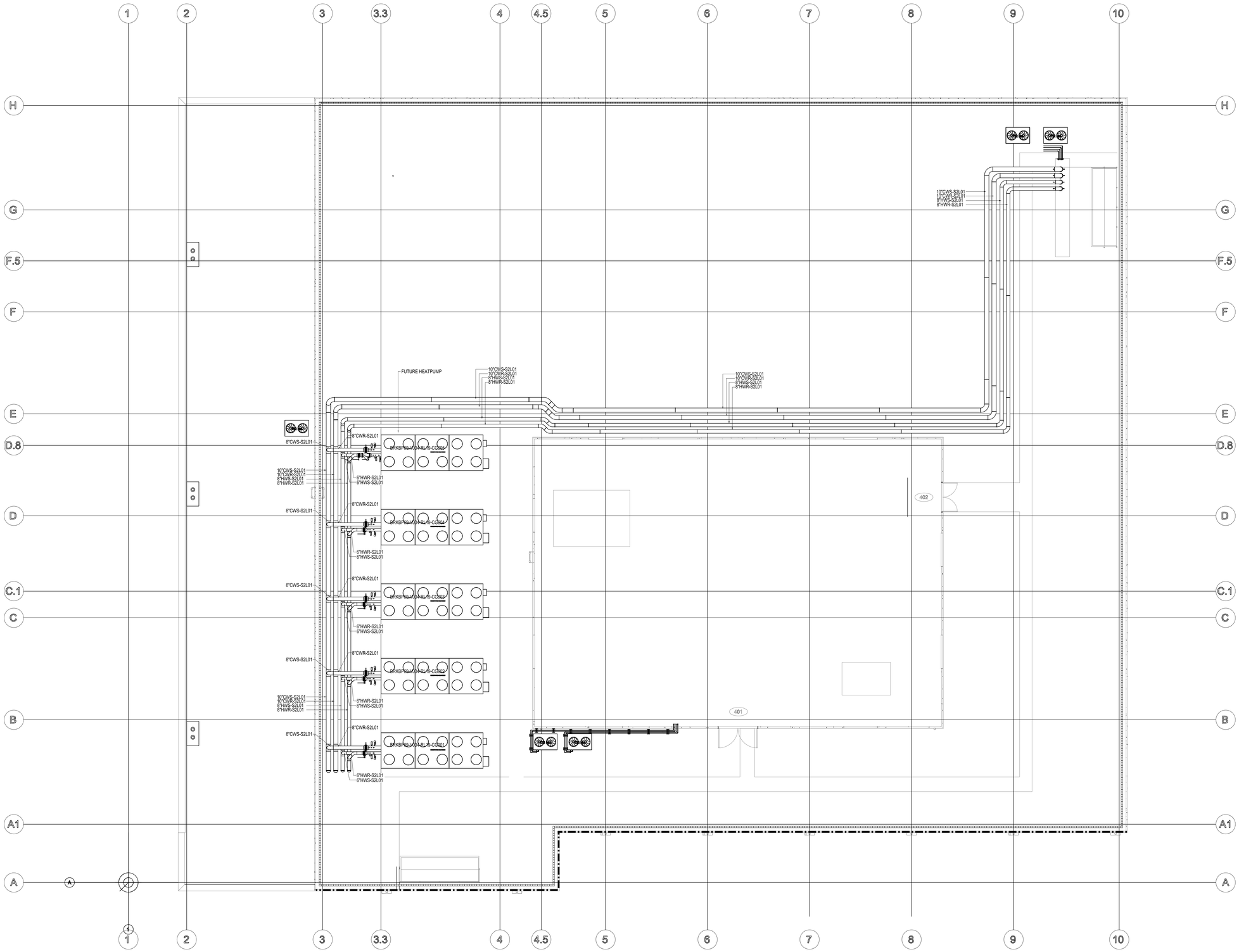

NOTES

1.SEAL PIPE PENETRATIONS THROUGH FLOORS
2.PROVIDE PIPE SUPPORTS PER LATEST SMACNA SEISMIC RESTRAINT MANUAL GUIDELINES FOR MECHANICAL SYSTEM.

LEGEND

PLANT STEAM (S60)
PLANT CONDENSATE (C60)
CHILLED WATER SUPPLY (CWS)
CHILLED WATER RETURN (CWR)
HEATED HOT WATER SUPPLY (HWS)
HEATED HOT WATER RETURN (HWR)
CHILLED GLYCOL SUPPLY (CGS)
CHILLED GLYCOL RETURN (CGR)

Title: LEVEL 4 ROOF HYDRONIC SYSTEM LAYOUT PIPING FLOOR PLAN			
Drawing Number:	ECM-20-026-BE-69-UT-13084	As-Built	Project 0
Scale:		Revision No.	

US3510580-46-DR-0124