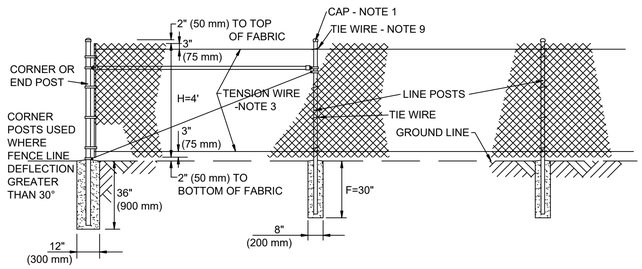


## B1 / C-501 CHAIN-LINK FENCE W/CORNER POST

C-101 SCALE: NONE

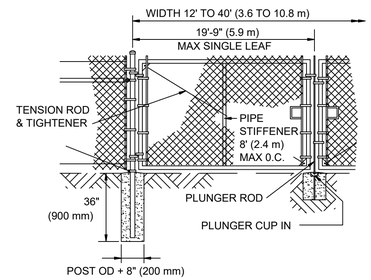


## B4 / C-501 SWING GATE

C-101 SCALE: NONE

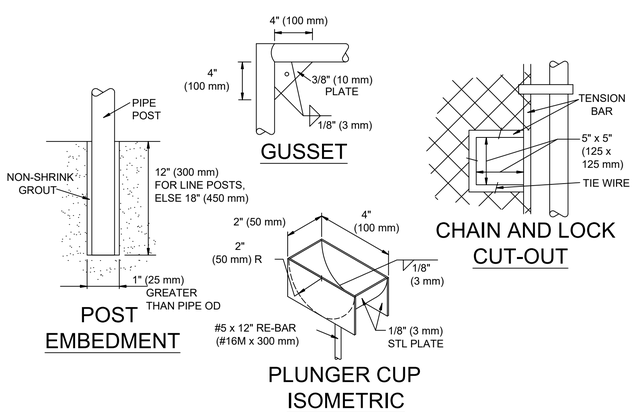


## E1 / C-501 SWING GATE DETAILS

C-101 SCALE: NONE

NOTES:

1. SECURE DRIVE-FIT GALVANIZED CAP TO POST WITH 1/4" (6 mm) ROUND-HEAD RIVET.
2. H DENOTES FABRIC WIDTH AND NOMINAL FENCE HEIGHT. H = 4' UNLESS OTHERWISE NOTED.
3. IF FENCE WITH TOP RAIL IS SPECIFIED, DELETE STEEL TENSION WIRE AT TOP, AND PIPE RAILS AT INTERMEDIATE, SLOPE, END AND CORNER POSTS. EXTEND TENSION ROD TO TOP RAIL.
4. POST SPACING IS MAXIMUM 10' (3.0 m).
5. FILL CLEAR OPENINGS GREATER THAN 3" (75 mm) WITH FABRIC. FOR OPENINGS LESS THAN 18" (450 mm), TIE FABRIC TO POSTS.
6. USE ONE POST FOR COMBINED SLOPE AND CORNER POST IF TOP OF CHANNEL WALL IS CONSTRUCTED AS SHOWN FOR "ALTERNATE".
7. STEEL BANDS AT TENSION BARS MUST BE 1/8" x 1" (3 x 25 mm), MINIMUM, SPACED AT MAXIMUM 16" (400 mm).
8. SECURE TENSION WIRES TO EACH LINE POST WITH TIE WIRES.

## E4 / C-501 FENCING NOTES

C-101 SCALE: NONE

Lawrence Livermore National Laboratory
Operations & Business - Detail

| | | |
|---|---|---|
| Des: BLAKE BROWN | 03/20/19 | Sheet: 1 of 1 |
| Dwn: NIKKI TANG | 03/20/19 | |
| Chk: BLAKE BROWN | 03/20/19 | |

| REV | DATE | REVISIONS | DRAWN | CHECK |
|---|---|---|---|---|
| | | | | |

Detail Title: PAVEMENT SECTION REPAIR

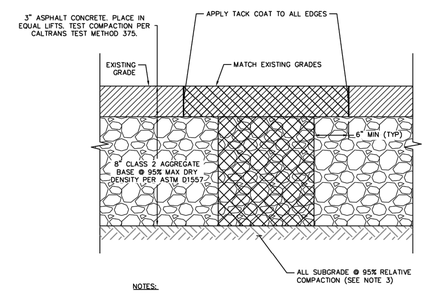


NOTES:

1. CUT THE PAVEMENT TO A NEAT, STRAIGHT EDGE.
2. IF EXISTING AC/AB SECTION IS GREATER THAN 3"/8", MATCH EXISTING.
3. SCARIFY AND RECOMPACT EXISTING SUBGRADE TO 95% OF RELATIVE COMPACTION PER ASTM D1557.
4. VALUES ASSUME AN R-VALUE OF 5.

Reference Scale: NTS

File Name: T:\Civil\Standard Details\CAD\Pavement Section Repair.dwg Date Plotted: 4/25/2019 – 9:56:06 AM

## E6 / C-501 PAVEMENT SECTION REPAIR

C-101 SCALE: NONE

KEY PLAN

Sheet Title

CIVIL DETAILS

Dwg. No.
PLC2021-0432-0004D

Sht. No.
C-501

THIS IS PRIVATE PROPERTY AND THE 811 PROCESS DOES NOT PROTECT YOU FROM HITTING PRIVATE UTILITIES. PLEASE USE NON-INVASIVE TECHNIQUES SUCH AS GPR AND ELECTROMAGNETIC TRACING TO LOOK FOR UTILITIES PRIOR TO ANY EXCAVATION.