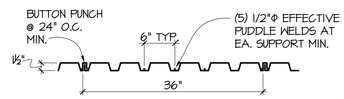

TYPE "B" MIN. DECK PROPERTIES		
GAUGE	I = (in.^{4}/ft.)	+S/-S = (in.^{3}/ft.)
18	.302	.322/.335

NOTES:
1. (2) SPAN MIN., (3) SPAN PREFERRED.
2. AT SUPPORTS PARALLEL TO CORRUGATIONS, PROVIDE PUDDLE WELDS @ 24" O.C. MAX.
3. MIN. DECK PROPERTIES & WELD PATTERN SHOWN. PROVIDE HEAVIER GA. AND/OR WELD PATTERN AS REQ'D TO DEVELOP DIAPHRAGM SHEARS.

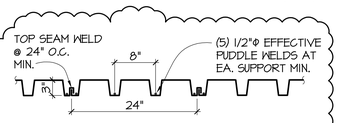

TYPE "N" MIN. DECK PROPERTIES		
GAUGE	I = (in.^{4}/ft.)	+S/-S = (in.^{3}/ft.)
18	1.223	.731/.776

NOTES:
1. AT SUPPORTS PARALLEL TO CORRUGATIONS, PROVIDE PUDDLE WELDS @ 24" O.C. MAX.
2. MIN. DECK PROPERTIES & WELD PATTERN SHOWN. PROVIDE HEAVIER GA. AND/OR WELD PATTERN AS REQ'D TO DEVELOP DIAPHRAGM SHEARS.

TYPICAL ROOF METAL DECK

1/S4.41 DETAIL
NO SCALE

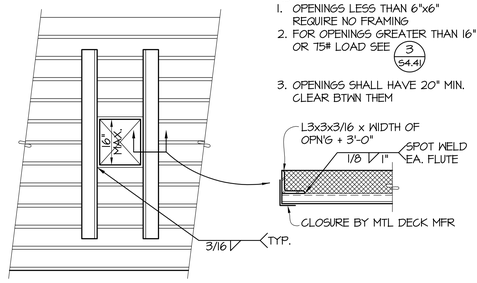

NOTES:
1. OPENINGS LESS THAN 6"x6" REQUIRE NO FRAMING
2. FOR OPENINGS GREATER THAN 16" OR T5# LOAD SEE 3/S4.41
3. OPENINGS SHALL HAVE 20" MIN. CLEAR BTWN THEM

TYPICAL AT ISOLATED OPENINGS IN NON-COMPOSITE METAL DECK LESS THAN 16" SQUARE

2/S4.41 DETAIL
NO SCALE

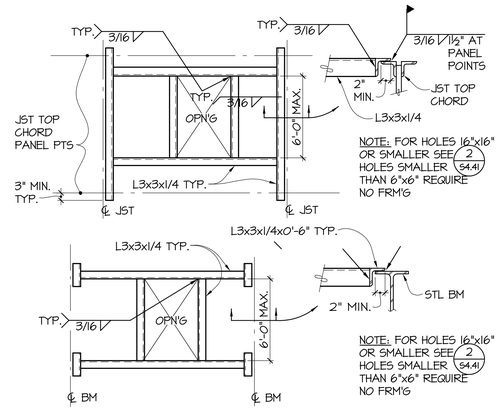

NOTE: FOR HOLES 16"x16" OR SMALLER SEE 2/S4.41 HOLES SMALLER THAN 6"x6" REQUIRE NO FRM'G

NOTE: FOR HOLES 16"x16" OR SMALLER SEE 2/S4.41 HOLES SMALLER THAN 6"x6" REQUIRE NO FRM'G

TYPICAL FRAMING AT OPENINGS IN METAL ROOF DECK (MAX. LOAD = 600#)

3/S4.41 DETAIL
NO SCALE

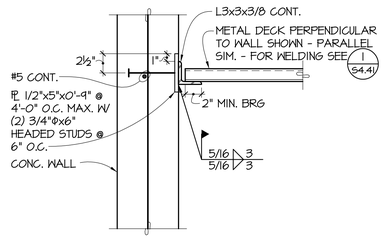

TYPICAL METAL DECK CONNECTION AT CONCRETE WALL

4/S4.41 SECTION
NO SCALE

PCS Structural Solutions
811 First Avenue, Suite 630
Seattle, Washington 98104
tel 206.292.5076
950 Pacific Avenue, Suite 1300
Tacoma, Washington 98402
tel 253.383.2797

GIFFIN • BOLTE • JURGENS p.c.
ARCHITECTS
815 S.W. SECOND AVENUE · PORTLAND, OREGON 97204
(503) 223-0992 www.gbjarch.com FAX (503) 294-3961

DONALD R. SCOTT
STATE OF WASHINGTON
22917
PROFESSIONAL ENGINEER

MultiCare

EMERGENCY DEPARTMENT & CANCER CENTER EXPANSION

TACOMA, WASHINGTON

REVISION	DESCRIPTION	DATE
1	CCD #1	11-12-08

Date	09-26-2008
Scale	NO SCALE
Drawn By	RSC
Job No.	4034

TYPICAL METAL DECK DETAILS

S4
41

Nov 12, 2008 - 10:10am Cad File: G:\2004_Jobs\2034 MultiCare TSS\1 Hosp Dept Expansion\Dwgs\S4241.dwg