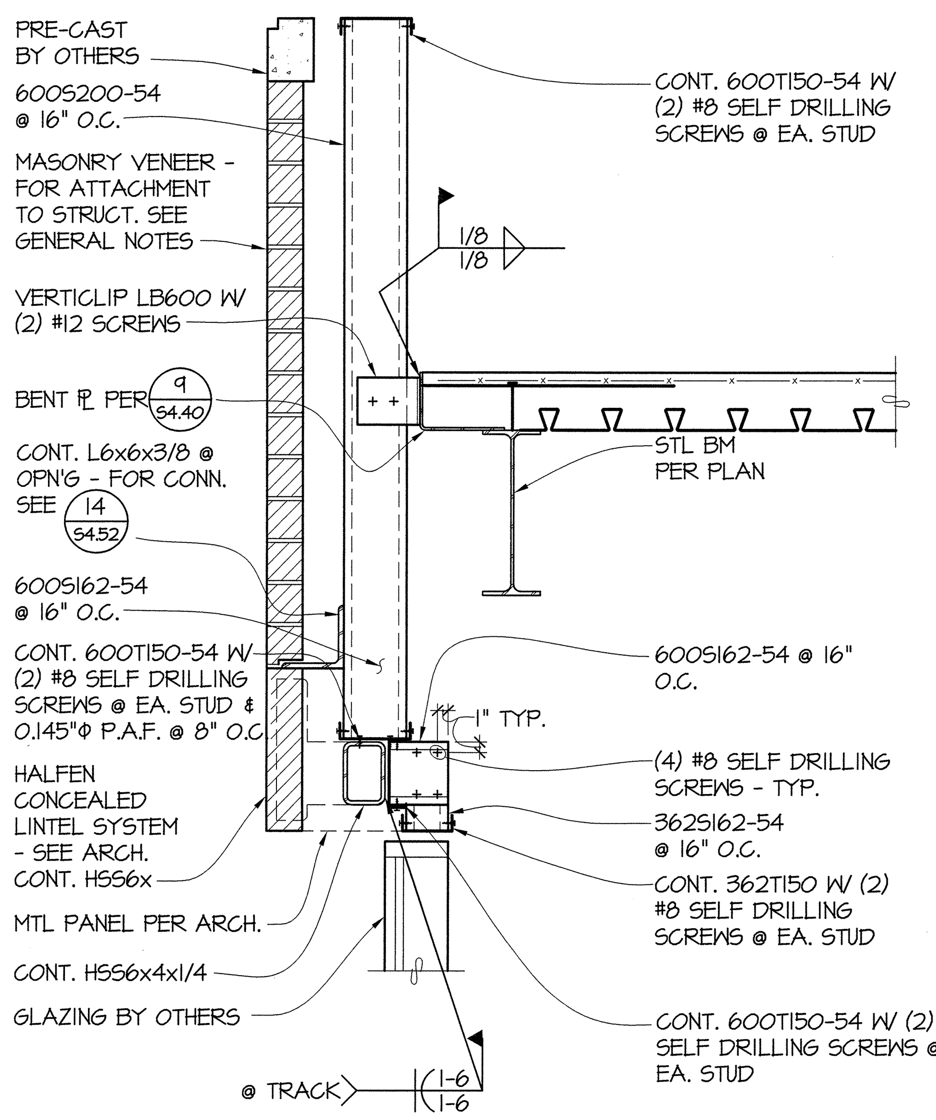

1 / S4.52 **SECTION** 1"=1'-0"

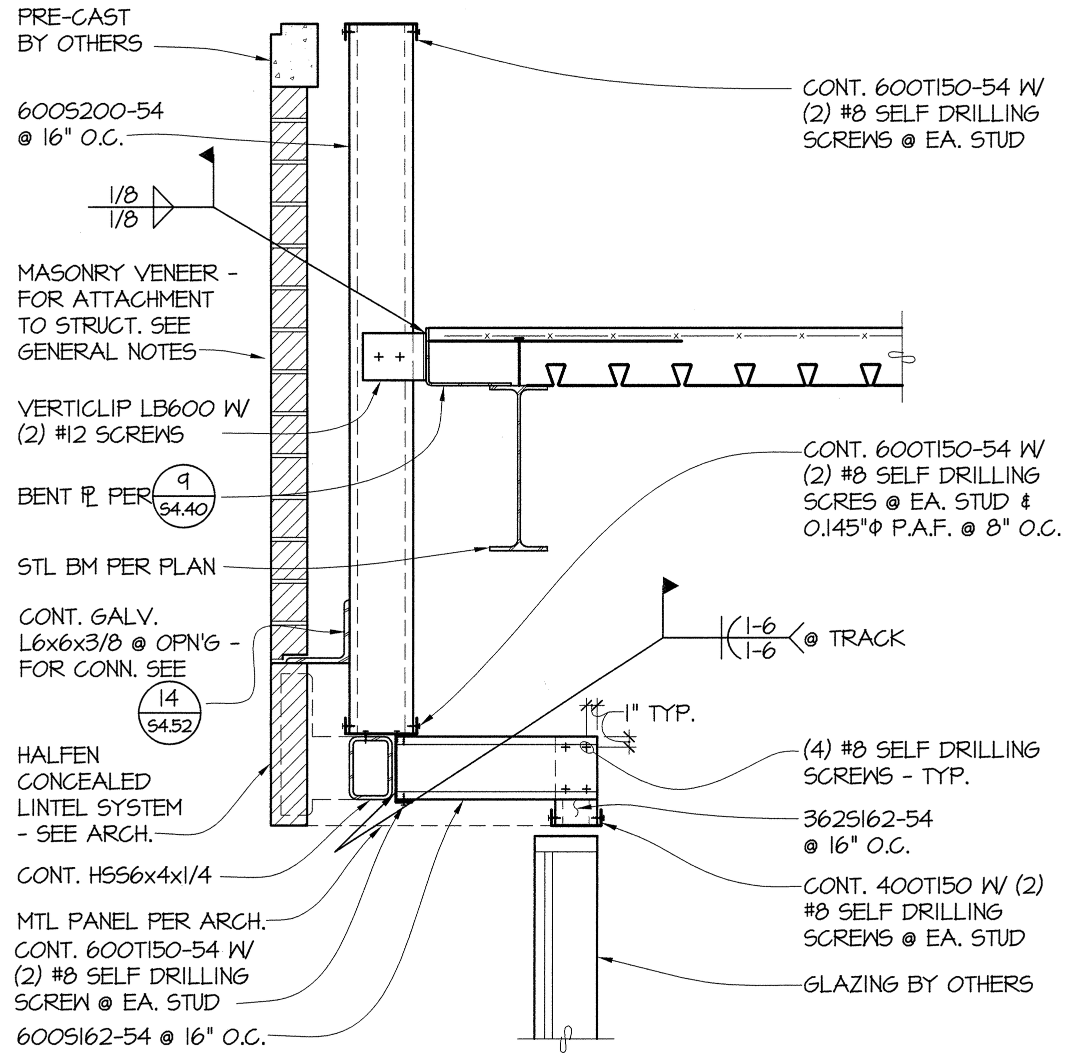

2 / S4.52 **SECTION** 1"=1'-0"

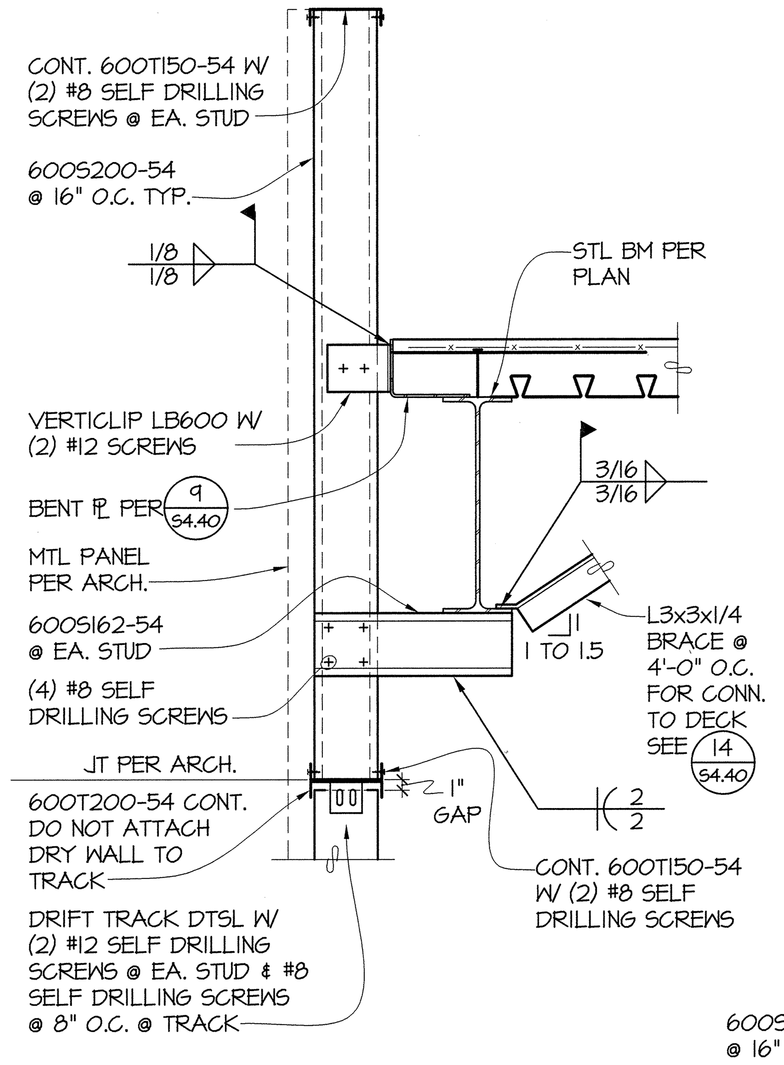

3 / S4.52 **SECTION** 1"=1'-0"

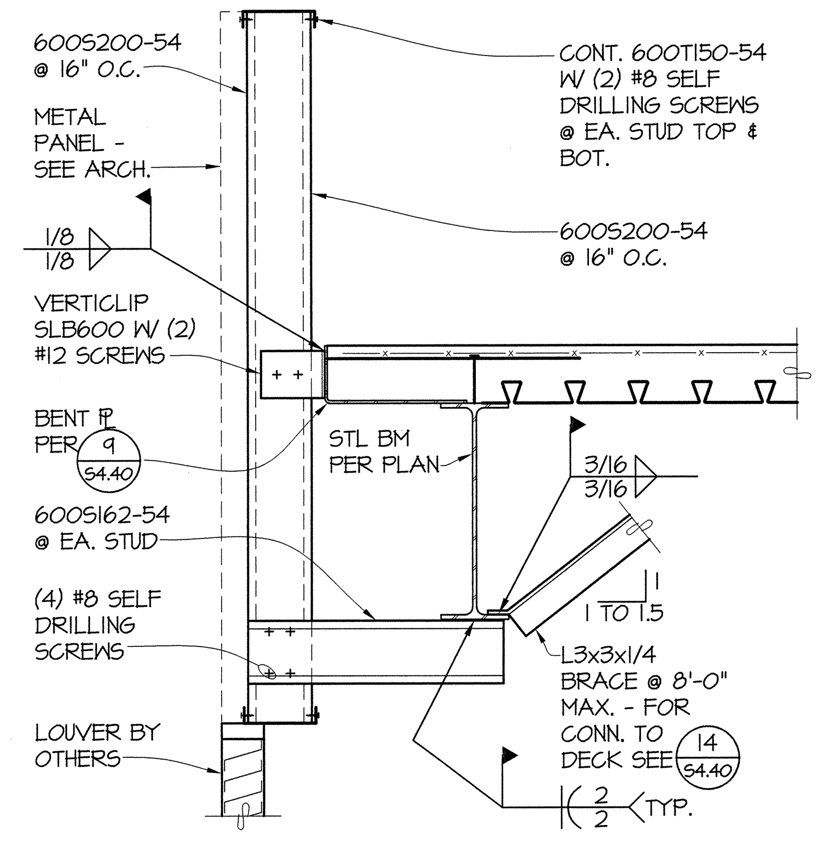

4 / S4.52 **SECTION** 1"=1'-0"

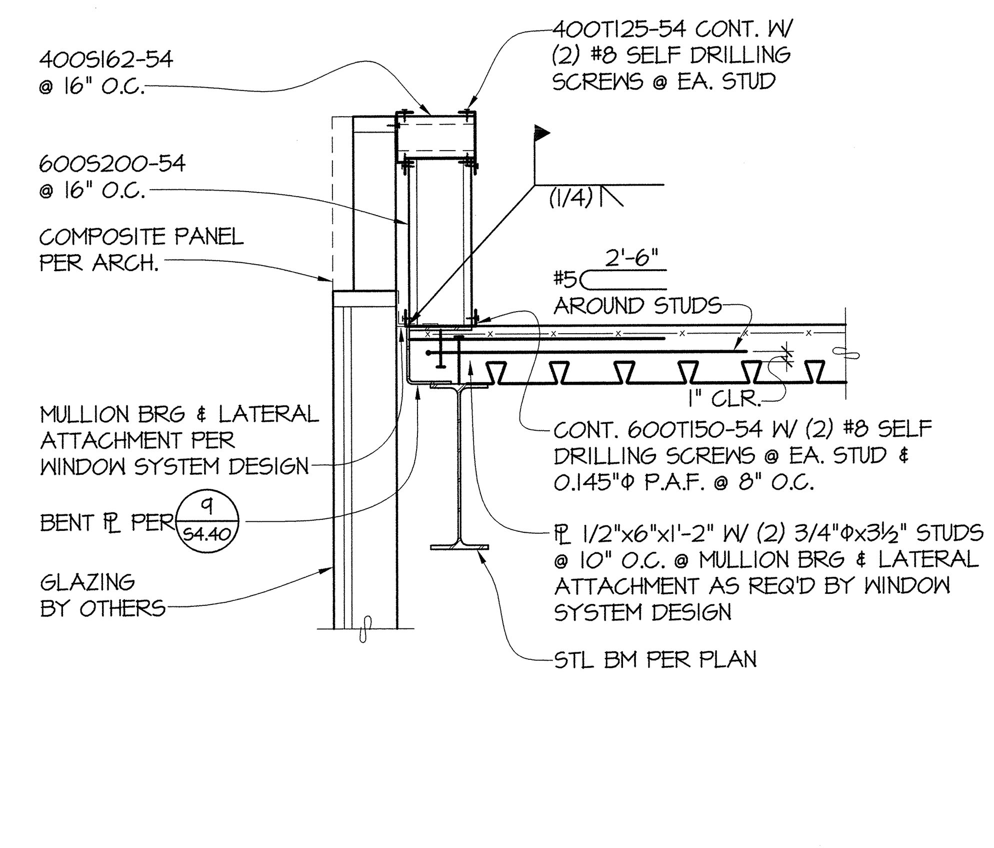

5 / S4.52 **SECTION** 1"=1'-0"

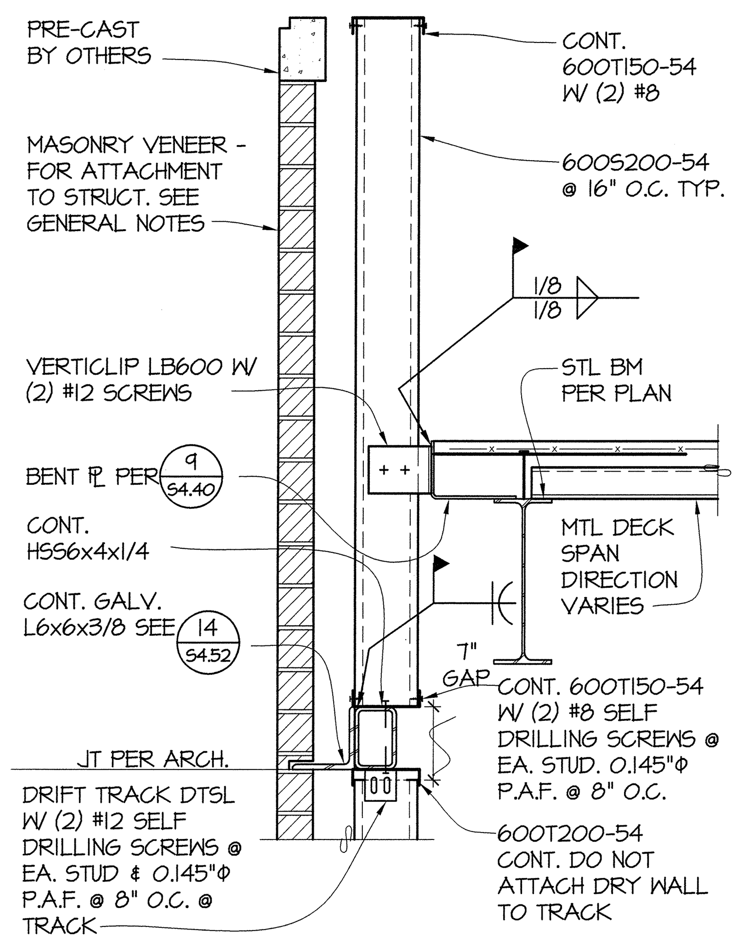

6 / S4.52 **SECTION** 1"=1'-0"

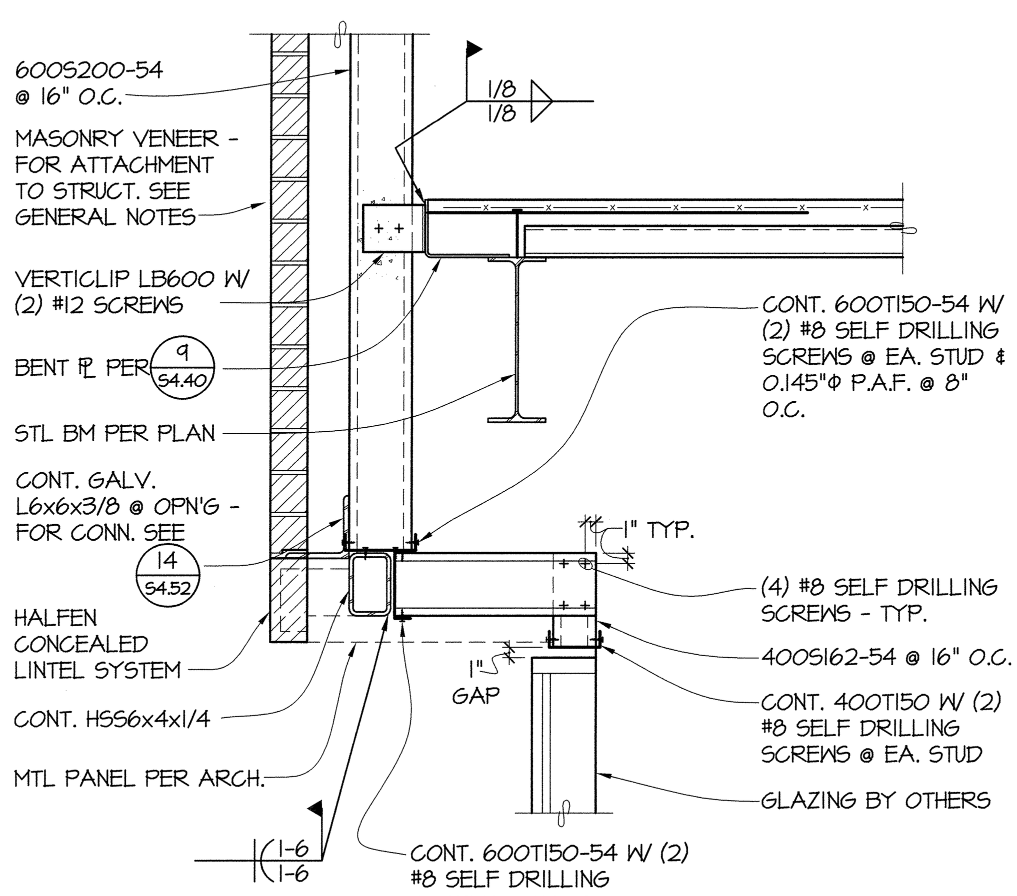

7 / S4.52 **SECTION** 1"=1'-0"

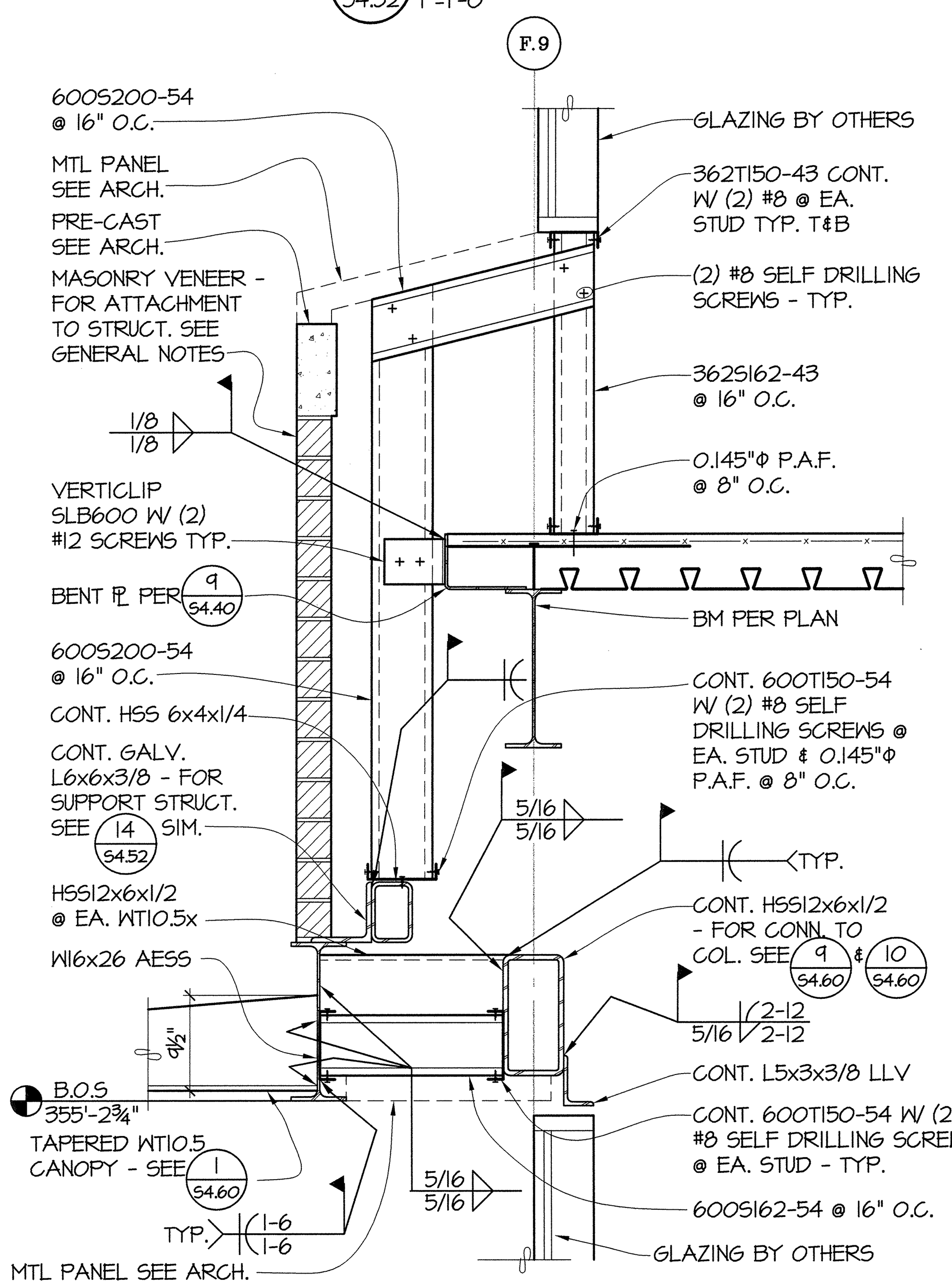

8 / S4.52 **SECTION** 1"=1'-0"

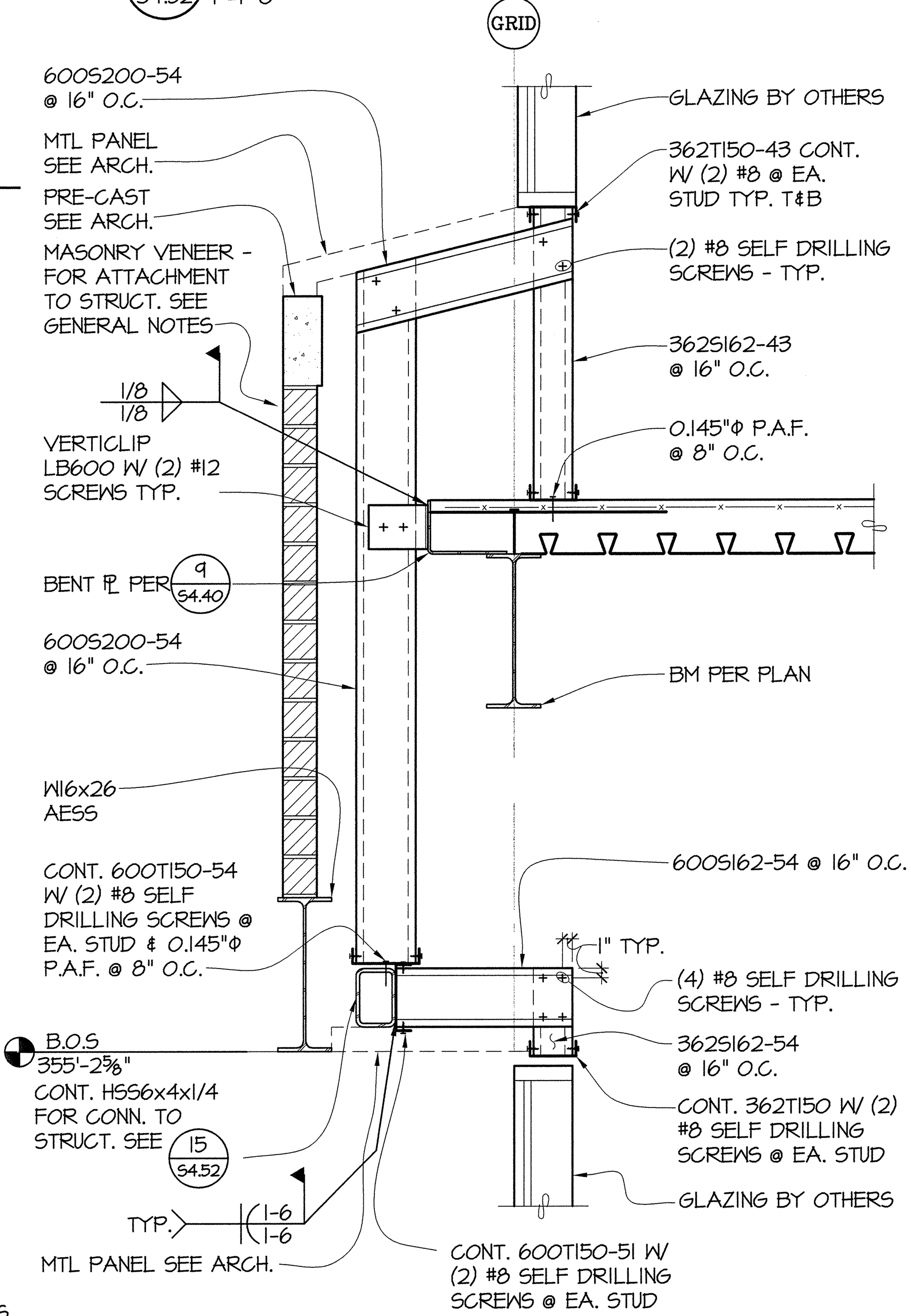

9 / S4.52 **SECTION** 1"=1'-0"

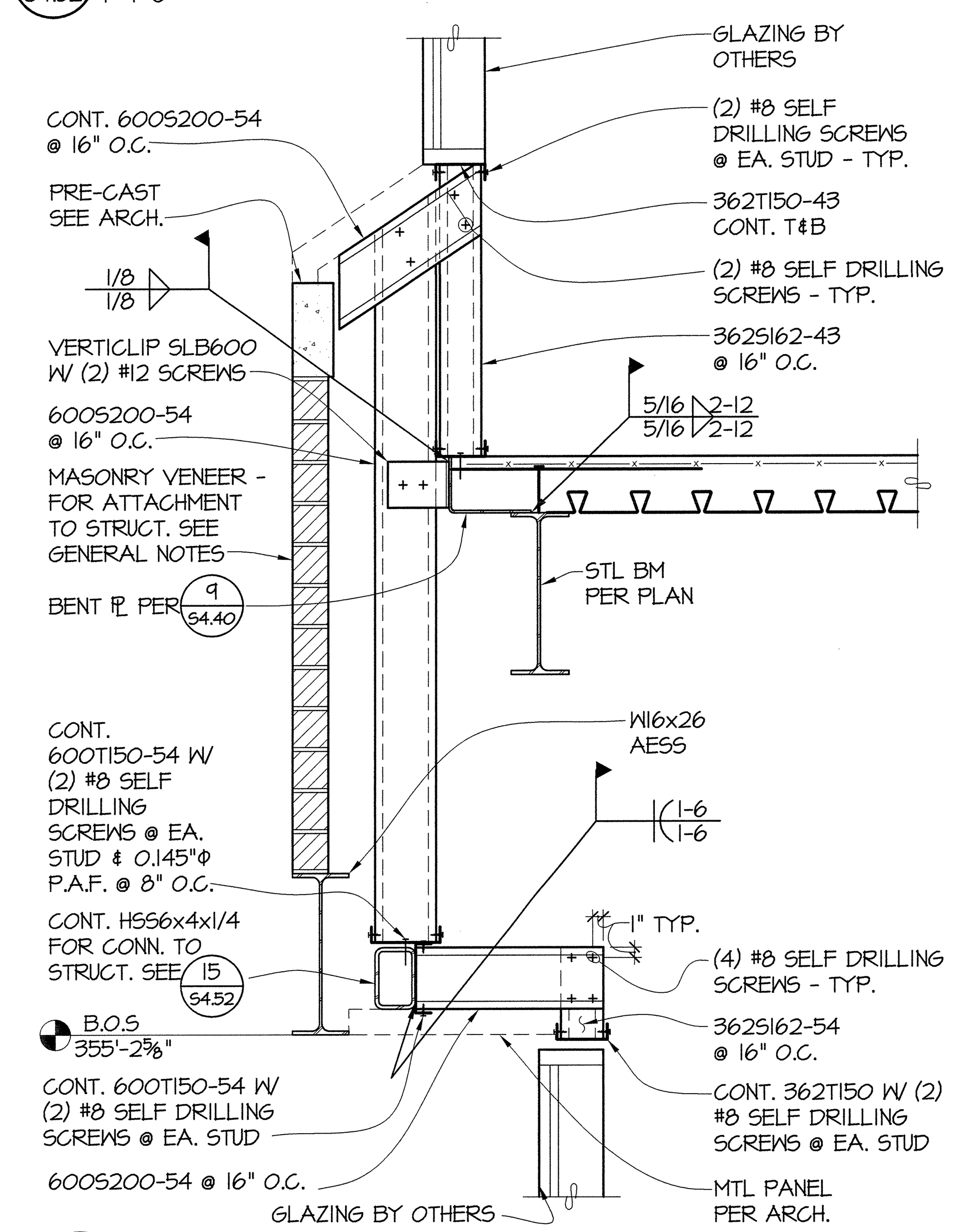

10 / S4.52 **SECTION** 1"=1'-0"

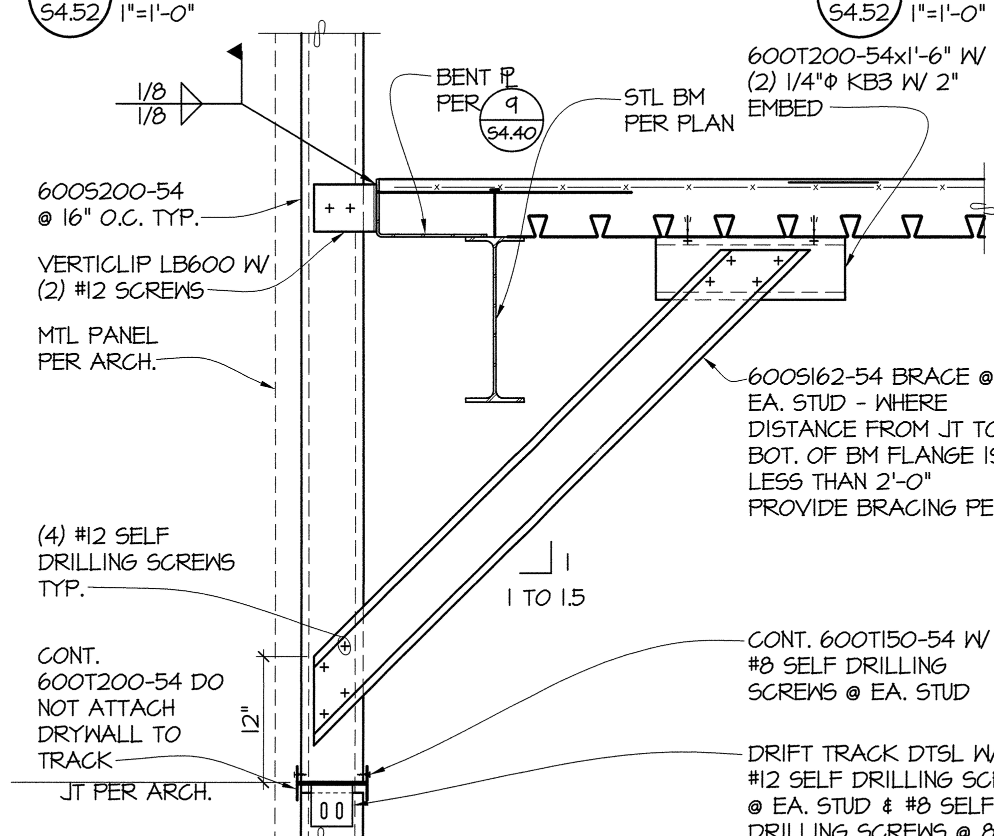

11 / S4.52 **SECTION** 1"=1'-0"

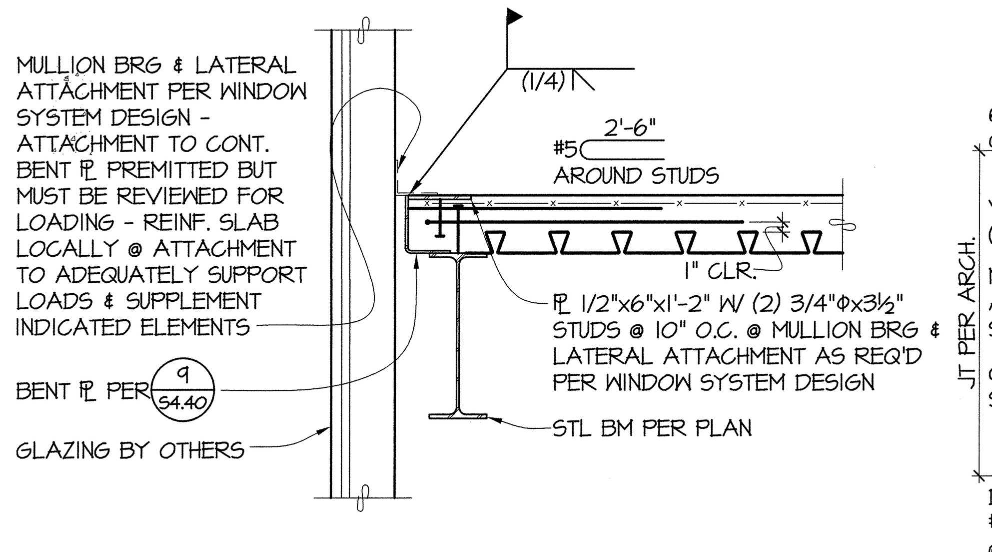

12 / S4.52 **SECTION** 1"=1'-0"

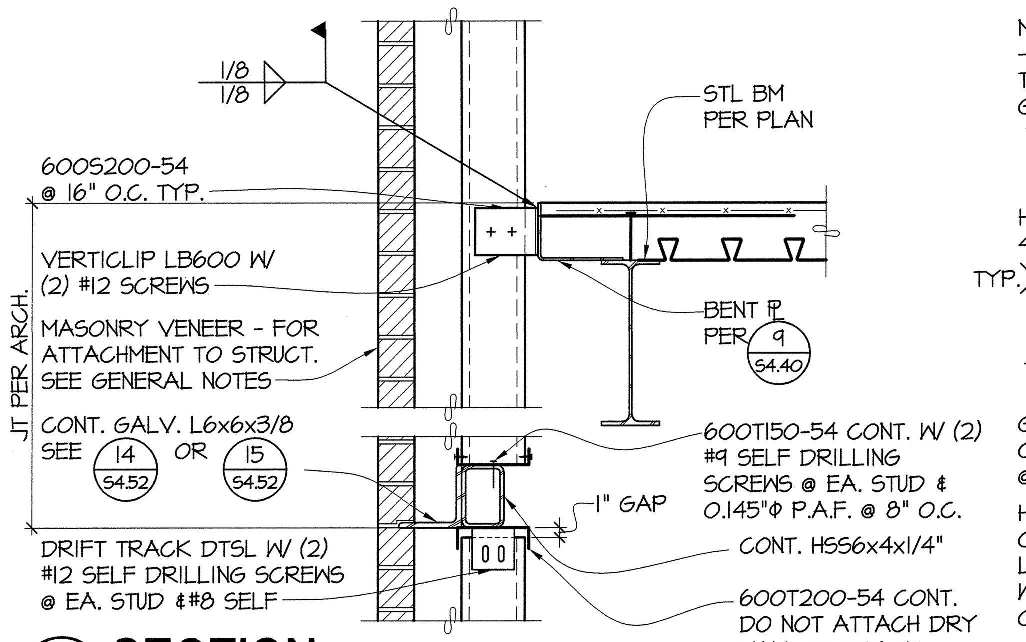

13 / S4.52 **SECTION** 1"=1'-0"

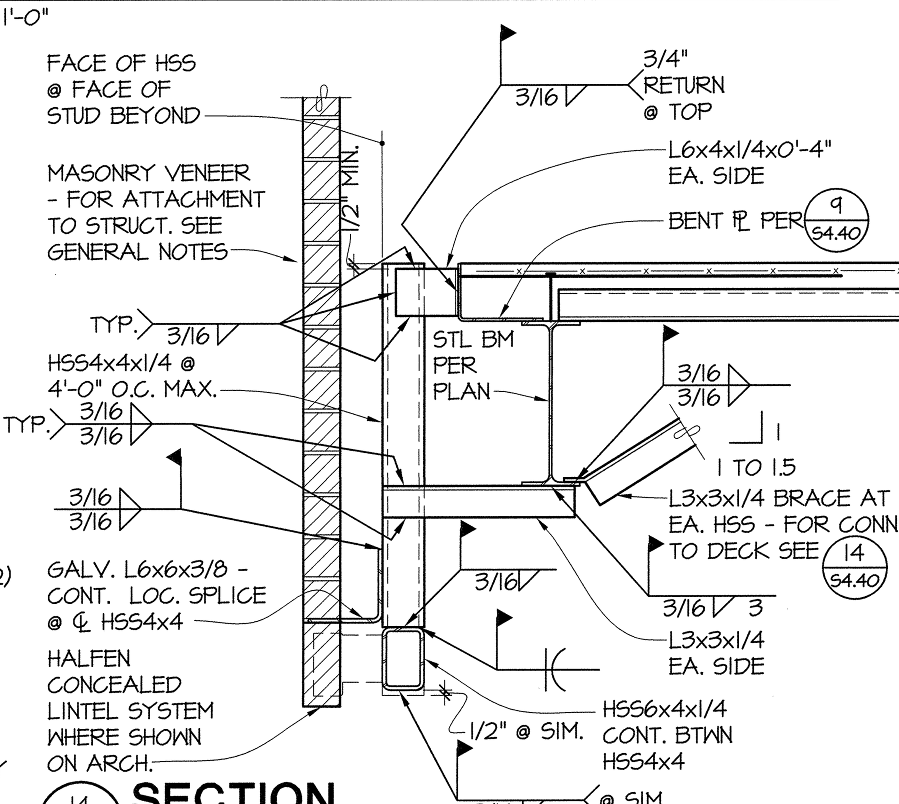

14 / S4.52 **SECTION** 1"=1'-0"

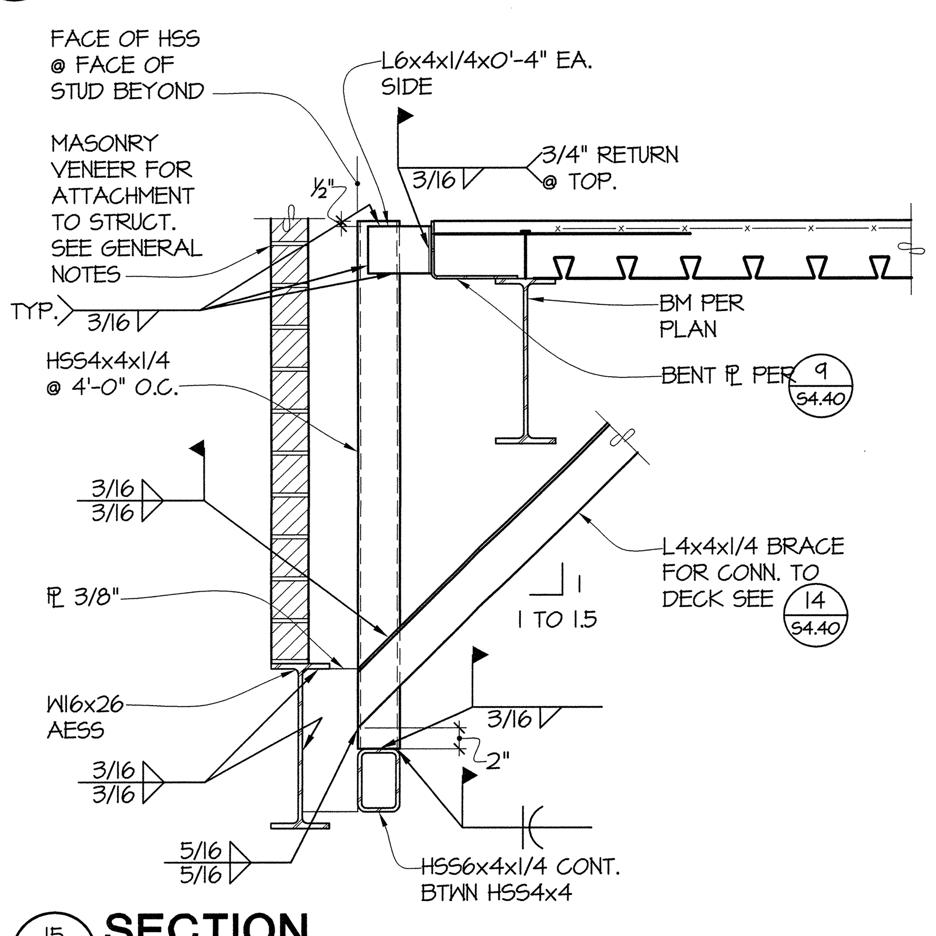

15 / S4.52 **SECTION** 1"=1'-0"

PCS Structural Solutions
811 First Avenue, Suite 620
Seattle, Washington 98104
tel: 206.292.5076
950 Pacific Avenue, Suite 1100
Tacoma, Washington 98402
tel: 253.383.2797

GIFFIN • BOLTE • JURGENS p.c.
ARCHITECTS
815 S.W. SECOND AVENUE · PORTLAND, OREGON 97204
(503) 223-0992 www.gbjarch.com FAX (503) 294-3961

DONALD R. SCOTT · STATE OF WASHINGTON · 22917 · STRUCTURAL ENGINEER · PROFESSIONAL ENGINEER

MultiCare

EMERGENCY DEPARTMENT & CANCER CENTER EXPANSION

TACOMA, WASHINGTON

Date	09-26-2008
Scale	NO SCALE
Drawn By	RSC
Job No.	4034

STEEL DETAILS

S4 / 52

Sep 25, 2008 - 2:21pm Cad File: G:\2006 Jobs\6202 MultiCare TG Emerg Dept Expansion\Dwgs\6202s452.dwg