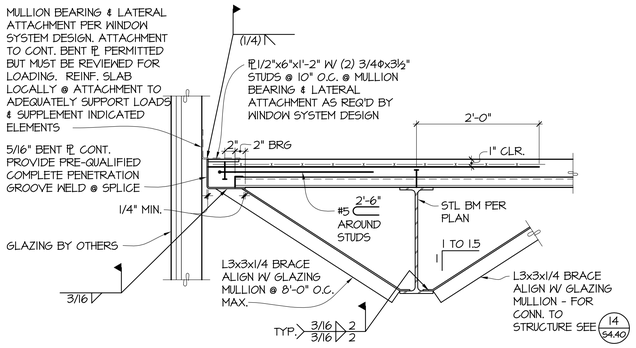

1/S4.53 SECTION
1"=1'-0"

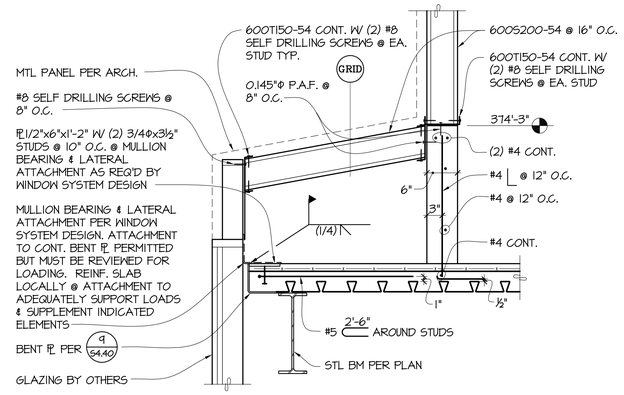

2/S4.53 SECTION
1"=1'-0"

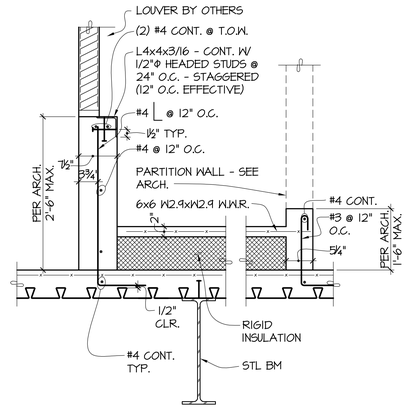

3/S4.53 SECTION
1"=1'-0"

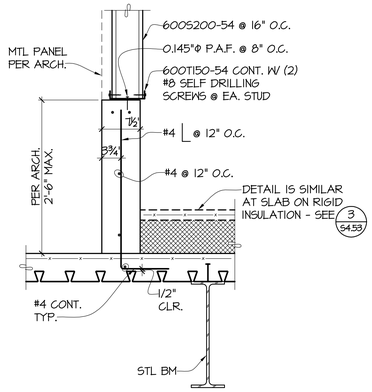

4/S4.53 SECTION
1"=1'-0"

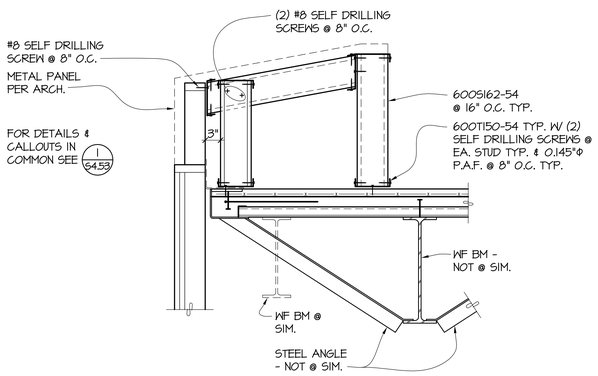

5/S4.53 SECTION
1"=1'-0"

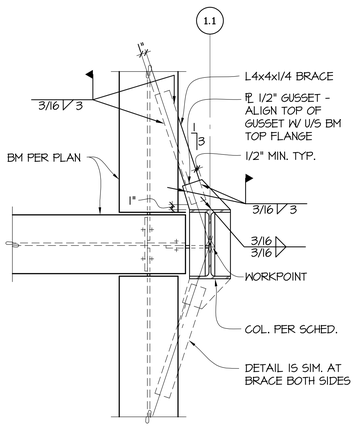

6/S4.53 DETAIL
1"=1'-0"

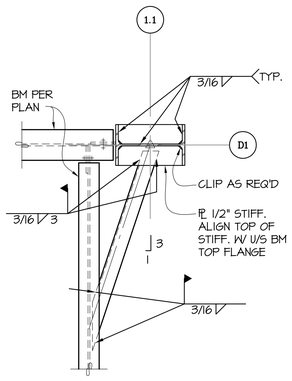

7/S4.53 DETAIL
1"=1'-0"

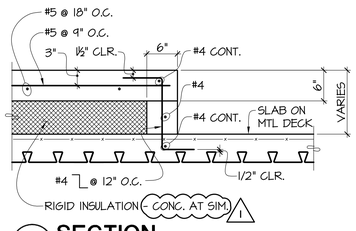

8/S4.53 SECTION
1"=1'-0"

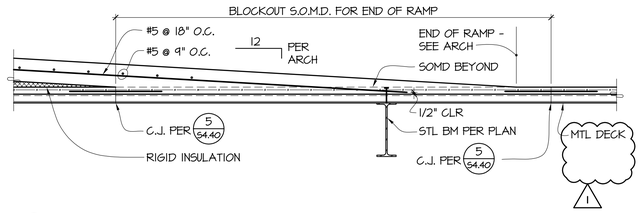

9/S4.53 SECTION
3/4"=1'-0"

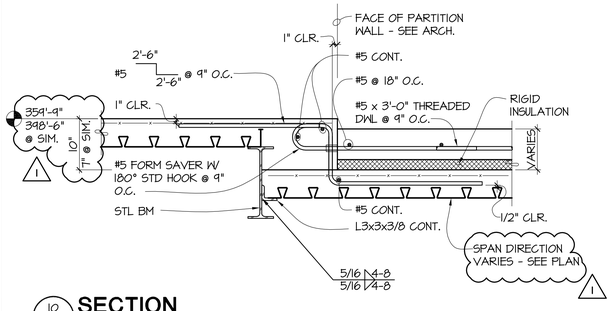

10/S4.53 SECTION
1"=1'-0"

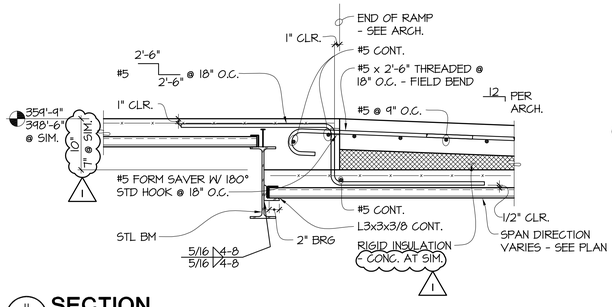

11/S4.53 SECTION
1"=1'-0"

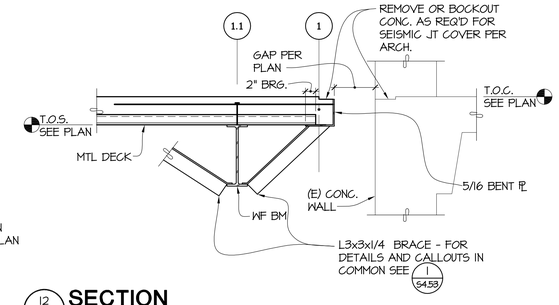

12/S4.53 SECTION
1"=1'-0"

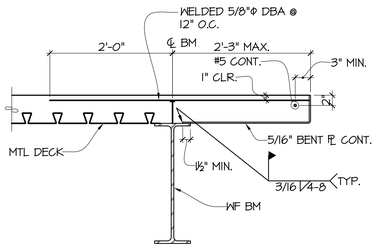

13/S4.53 SECTION
NO SCALES

PCS Structural Solutions
811 First Avenue, Suite 630
Seattle, Washington 98104
tel 206.292.5070
950 Pacific Avenue, Suite 1100
Tacoma, Washington 98402
tel 253.383.2797

GIFFIN • BOLTE • JURGENS p.c.
ARCHITECTS
815 S.W. SECOND AVENUE · PORTLAND, OREGON 97204
(503) 223-0992 www.gbjarch.com FAX (503) 294-3961

DONALD R. SCOTT STATE OF WASHINGTON 22917 PROFESSIONAL ENGINEER

MultiCare

EMERGENCY DEPARTMENT & CANCER CENTER EXPANSION

TACOMA, WASHINGTON

REVISION	DESCRIPTION	DATE
1	CCD #2	12-03-08

Date	09-26-2008
Scale	NO SCALE
Drawn By	RSC
Job No.	4034

STEEL DETAILS

S4
53

Date: 02 - 2008 - 3:13pm Cad File: G:\2006\2006-0002 MultiCare TTC\Dwg\Design\Exterior\Details\Details.dwg