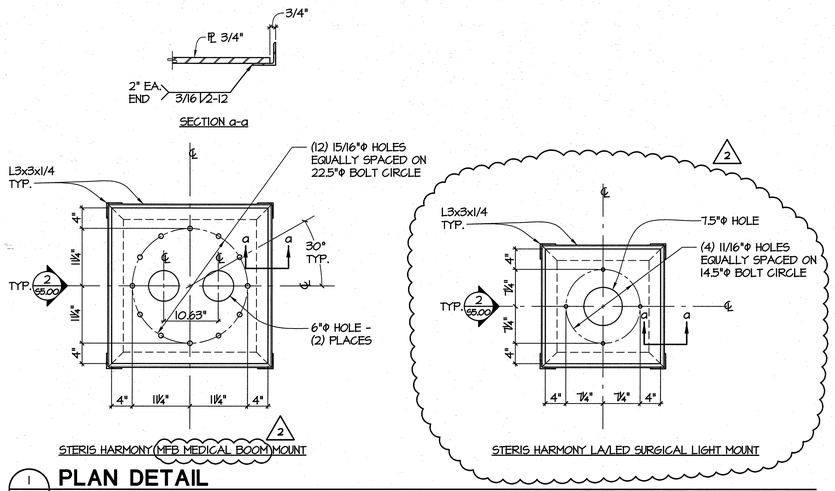

1 55.00 **PLAN DETAIL**
1"=1'-0"

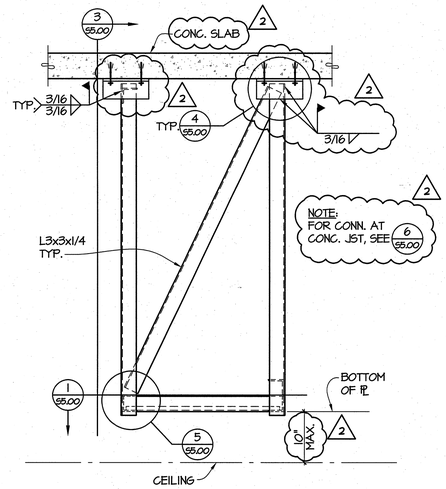

TYPICAL FRAME
2 55.00 **ELEVATION**
1"=1'-0"

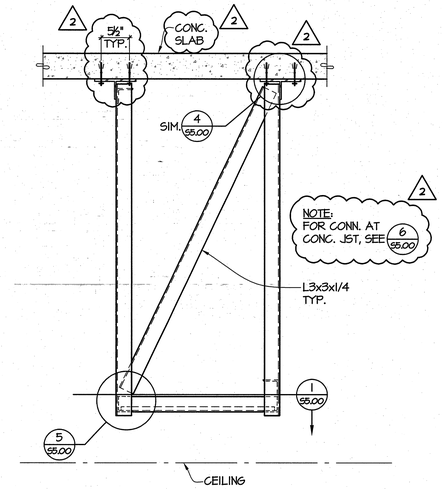

TYPICAL FRAME
3 55.00 **ELEVATION**
1"=1'-0"

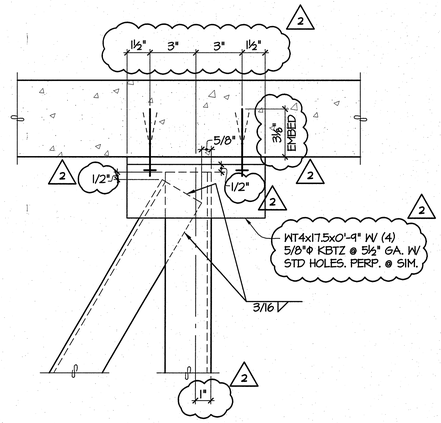

4 55.00 **TYPICAL CONNECTION**
3"=1'-0"

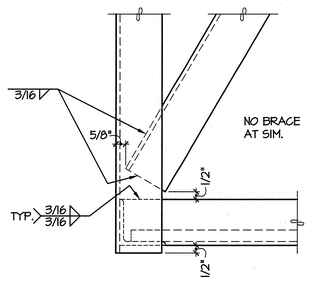

5 5.00 **TYPICAL CONNECTION**
3"=1'-0"

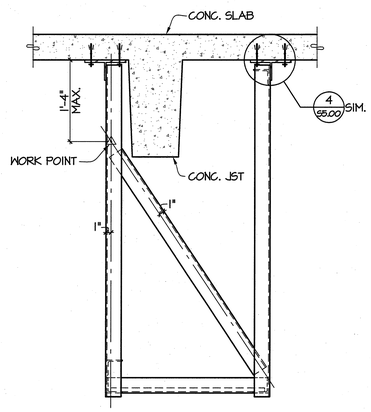

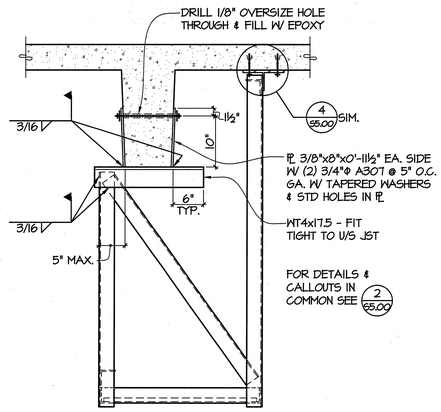

2 FRAME AT EXISTING CONCRETE JOIST
6 55.00 **ELEVATION**
1"=1'-0"

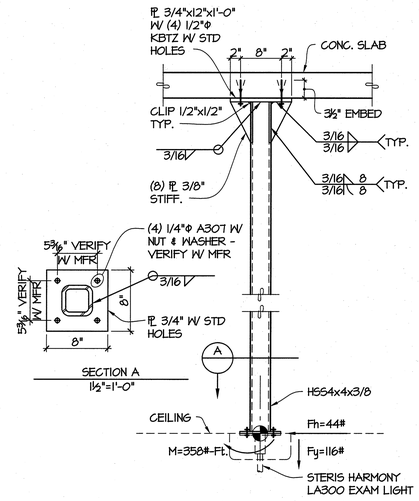

7 55.00 **SECTION**
1"=1'-0"

PCS Structural Solutions
811 First Avenue, Suite 620
Seattle, Washington 98104
tel 206.292.5070
950 Pacific Avenue, Suite 1300
Tacoma, Washington 98402
tel 253.383.2797

GIFFIN • BOLTE • JURGENS p.c.
ARCHITECTS
815 S.W. SECOND AVENUE · PORTLAND, OREGON 97204
(503) 223-0992 www.gbjarch.com FAX (503) 294-3961

MultiCare

EMERGENCY DEPARTMENT & CANCER CENTER EXPANSION

TACOMA, WASHINGTON

REVISION	DESCRIPTION	DATE
1	CCD #2	12-03-08
2	CCD #4	12-17-08

Date	09-26-2008
Scale	NO SCALE
Drawn By	rdw
Job No.	4034

MISCELLANEOUS DETAILS

S5
00

Date: 17, 2008 - 9:54am Cad File: G:\2008 Jobs\4034 MultiCare TE Energy Dept Expansion\Dwgs\S5.00.dwg