DU-023

Skanska Shimmick Herzog
A Joint Venture in Association with LAN | TY Lin

SSH JV

Milpitas Station
Design Unit 023
Readiness for Construction
Civil

SVBX C700

Wednesday, July 10, 2013

HALF SIZE
COPY

Lockwood, Andrews & Newnam, Inc.
A LEO A DALY COMPANY

TY·LIN INTERNATIONAL
engineers | planners | scientists

Not For Construction

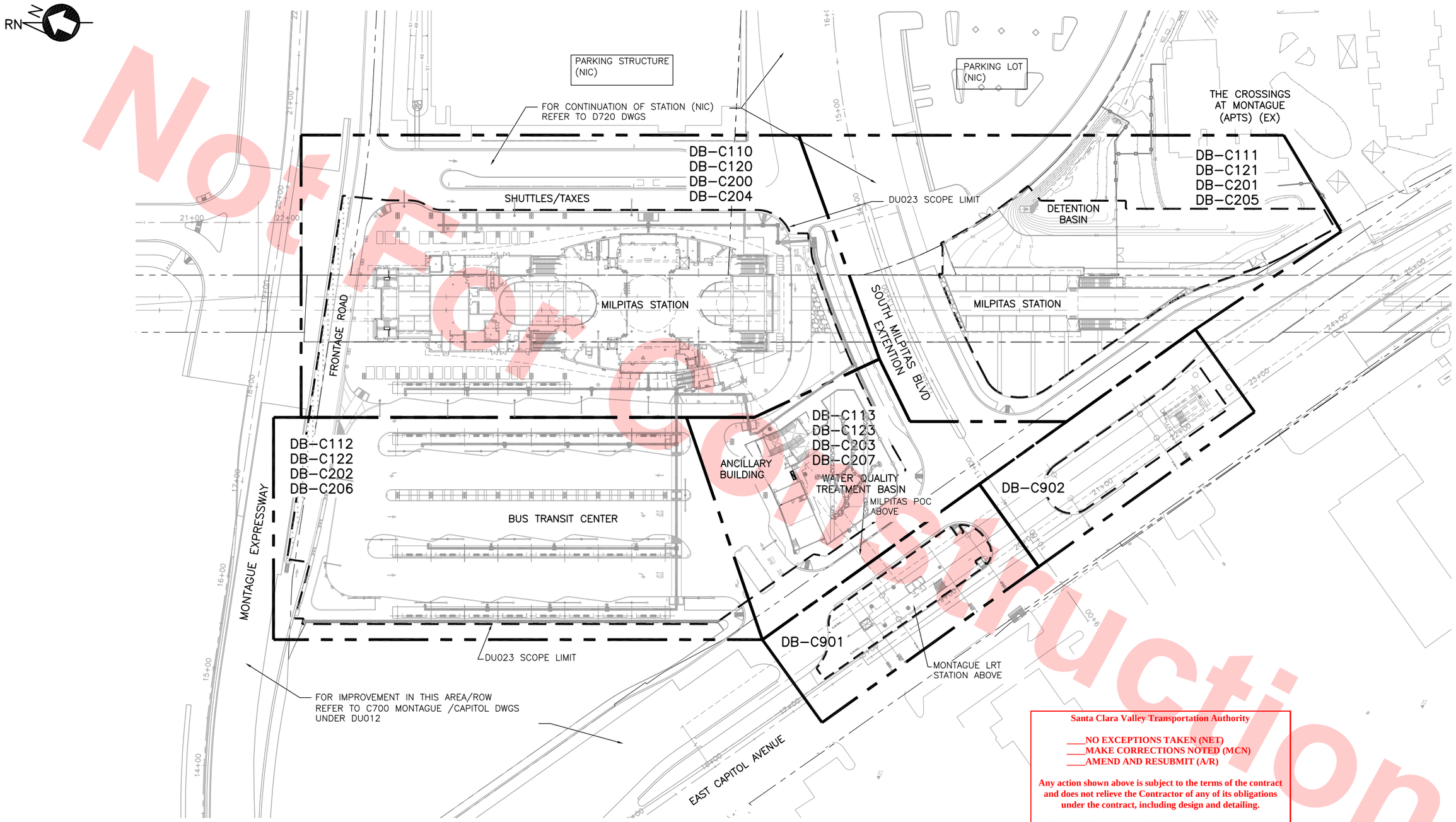

PLAN
1"=50'

Not For Construction

Santa Clara Valley Transportation Authority

____NO EXCEPTIONS TAKEN (NET)
____MAKE CORRECTIONS NOTED (MCN)
____AMEND AND RESUBMIT (A/R)

Any action shown above is subject to the terms of the contract and does not relieve the Contractor of any of its obligations under the contract, including design and detailing.

Contract No.: DB11002F

By: _____ **Date:** _____

50' 0' 50' 100'
GRAPHIC SCALE

REV	DATE	BY	SUB	APP	DESCRIPTION
0	20130710				READINESS FOR CONSTRUCTION

DESIGNED BY J. WU
DRAWN BY J. WU
CHECKED BY J. JI
IN CHARGE J. JI
DATE 20130710

REGISTERED PROFESSIONAL ENGINEER JUN JI No. C 72794 Exp. 06/30/14 CIVIL STATE OF CALIFORNIA

Skanska Shimmick Herzog
1436 California Circle
Milpitas, California 95035
A Joint Venture

KAL KRISHNAN CONSULTING SERVICES
300 LAKESIDE DRIVE, SUITE #220
OAKLAND, CA 94612
SUBMITTED

Lockwood, Andrews & Newnam, Inc. A LEO A DALY COMPANY
T·Y·LIN INTERNATIONAL
APPROVED

VTA BART SILICON VALLEY
BART SILICON VALLEY BERRYESSA EXTENSION

LINE, TRACK, STATIONS AND SYSTEMS
DESIGN UNIT 023
MILPITAS STATION
DRAWING LAYOUT INDEX

CADD FILENAME C700–S–DB–C001.dwg
SIZE D | SCALE 1"=50'–0"
CONTRACT NO. C700 | REV. 0
AREA CODE DB | SHEET NO. C001 | PAGE NO. 0018

Jun 25, 2013 – 12:39pm M:\DC PROJECTS\SVBX\5.0 Deliverables\5.2 Drawings\Milpitas Station\Civil\C700-S-DB-C001.dwg
Judy

ABBREVIATIONS

AC	ASPHALT CONCRETE
AD	AREA DRAIN
APPROX	APPROXIMATE
ARCH	ARCHITECT'S
BC	BEGINNING OF CURVE
BL	BASE LINE
BLDG	BUILDING
BOC	BACK OF CURB
BOP	BOTTOM OF PIPE
BOT	BOTTOM
BVC	BEGINNING OF VERTICAL CURVE
BW	BOTTOM OF WALL
CB	CATCH BASIN
CFS	CUBIC FEET PER SECOND
CI	CAST IRON
CIP	CAST IN PLACE
CL	CENTERLINE
CLR	CLEARANCE, CLEAR
CNG	COMPRESSED NATURAL GAS
CMH	COMMUNICATIONS MANHOLE
CO	CLEANOUT
COL	COLUMN
CONC	CONCRETE
CONT	CONTINUE,CONTINUOUS
CW	POTABLE WATER
CPB	COMMUNICATION PULL BOX
DOF	DRAIN OVERFLOW PIPE
DCO	DRAIN CLEANOUT
DET	DETAIL
DIA	DIAMETER OR ROUND
DIP	DUCTILE IRON PIPE
DMH	DRAIN MANHOLE
DWG	DRAWING
E	EAST
EA	EACH
EC	END OF CURVE
ELEC	ELECTRICAL
ELEV,EL	ELEVATION
EMH	ELECTRICAL MANHOLE
EPB	ELECTRICAL PULL BOX
EQ	EQUAL
EW	EACH WAY
EX,EXIST	EXISTING
FDN	FOUNDATION
FG	FINISH GRADE
FH	FIRE HYDRANT
FFE	FINISH FLOOR ELEVATION
FL	FLOW LINE
FS	FINISH SURFACE
FTG	FOOTING
FW	FIRE WATER
GB	GRADE BREAK
GR	GRADE
GRT	GRATE
GV	GATE VALVE
HORIZ	HORIZONTAL
HP	HIGH POINT
ID	INSIDE DIAMETER
INV	INVERT
JB	JUNCTION BOX
JT	JOINT
L	LENGTH OF CURVE
LB	POUND
MAX	MAXIMUM
MH	MANHOLE
MIN	MINIMUM
MISC	MISCELLANEOUS
MPG	MEDIUM PRESSURE GAS
N	NORTH
NIC	NOT IN CONTRACT
NO	NUMBER
NTS	NOT TO SCALE
O.C.	ON CENTER
OD	OUTSIDE DIAMETER
OPNG	OPENING
PA	PLANTING AREA
PED	PEDESTRIAN
PCV	PRESSURE CONTROL VALVE
PI	POINT OF INTERSECTION
PIP	POURED-IN-PLACE
PL	PROPERTY LINE
POC	POINT OF CONNECTION
PSI	POUNDS PER SQUARE INCH
PT	POINT OF TANGENT
PVC	POLYVINYL CHLORIDE
PVI	POINT OF VERTICAL INTERSECTION
PVMT	PAVEMENT
R, RAD.	RADIUS
RCP	REINFORCED CONCRETE PIPE
REBAR	REINFORCEMENT BAR
RD	ROAD
RED	REDUCER
REF	REFERENCE
REINF	REINFORCED
REQD	REQUIRED
REV	REVISE,REVISION
ROW	RIGHT OF WAY
S	SEWER , SOUTH
SCH	SCHEDULE
SCO	SEWER CLEANOUT
SIM	SIMILAR
SMH	SEWER MANHOLE
SPEC	SPECIFICATIONS
STA	STATION
STD	STANDARD
STL	STEEL
STRUCT	STRUCTURAL
SG	SEWER GRATE
T	TANGENT LENGTH
TBD	TO BE DETERMINED
TC	TOP OF CURB
TOC	TOP OF CONCRETE
TW	TOP OF WALL
TYP	TYPICAL
UG	UNDERGROUND
UNDF	UNDEFINED
UNO	UNLESS NOTED OTHERWISE
V	VENT
VEH	VEHICLE
VERT	VERTICAL
W	WEST
W/	WITH
W/O	WITHOUT
WS	WATER SURFACE
WWF	WELDED WIRE FABRIC

Santa Clara Valley Transportation Authority

____NO EXCEPTIONS TAKEN (NET)
____MAKE CORRECTIONS NOTED (MCN)
____AMEND AND RESUBMIT (A/R)

Any action shown above is subject to the terms of the contract and does not relieve the Contractor of any of its obligations under the contract, including design and detailing.

Contract No.: DB11002F

By: _____ Date: _____

MASTER KEY NOTES

1	6" BARRIER CURB	C / DB-C220
2	6" CURB/GUTTER PER CITY OF MILPITAS STANDARD	A / DB-C220
3	PCC PAVING – PEDESTRIAN (ON-GRADE)	4 / DB-C232; 1 / DB-L251
4	AC PAVING (ON-GRADE)	5 / DB-C233
5A 5B	PCC PAVING – PEDESTRIAN (ON-STRUCTURE)	8 / DB-C233; – / DB-L251
6	AC PAVING (ON-STRUCTURE)	6 / DB-C233
7	PCC PAVING – VEHICULAR (ON-STRUCTURE)	7 / DB-C233
8	PCC PAVING – VEHICULAR (ON-GRADE)	3 / DB-C232
9	6" CURB/GUTTER PER SANTA CLARA COUNTY STANDARD	B / DB-C220
10	AREA DRAIN	– / DB-C222
11	ON-STRUCTURE PAVING LIMIT PER STRUCTURAL DWGS	
12	TACTILE GUIDE STRIP PER LANDSAPE DWGS	1 / DB-L256
13	TRENCH DRAIN PER ARCHITECTURAL DWGS	
14	CROSSWALK STRIPING PER DB-C300	
15	ROAD STRIPING PER DB-C300	
16	PEDESTRIAN BARRIER RAILS DETAILS PER LANDSCAPE DWGS	
17	CONCRETE SHORT WALL PER LANDSCAPE DWGS	
18	MOW CURB PER LANDSCAPE DWGS	
19	GRAVEL PER LANDSCAPE DWGS	
20	RECONFIGURE EX DETENTION BASIN	
21	REPLACE EX FENCE IN KIND	
22	REPLACE EX SCREEN WALL IN KIND	
23	EX FENCE TO REMAIN	
24	EX DETENTION BASIN TO REMAIN	
25	CONCRETE BOX OUTFALL STRUCTURE	
26	AGGREGATES PAVEMENT	
27	VEHICLE ACCESS GATE PER LANDSCAPE DWGS	
28	PERIMETER WALL TO BE REMOVED	
29	COBBLE PAVING PER LANDSCAPE DWGS	D010
30	WATER QUALITY TREATMENT BASIN	
31	ACCESS GATE PER LANDSCAPE DWGS	D010
32	OVERFLOW STRUCTURE AT BIO-RETENTION BASIN	
33	NOT USED	
34	CONCRETE BAND PER LANDSCAPE DWGS	
35	CONCRETE CURB WALL SEE	1 / DB-C705
36	OVERFLOW STRUCTURAL SEE DB-C210, DB-C211	
37	PERIMETER FENCE PER LANDSCAPE	

MASTER KEY NOTES

38	BARRIER RAIL	– / DB-L259; 3 / DB-C702; 4 / DB-C702
39	PLANTER CURB	3 / DB-L263
40	SAND OIL SEPARATOR PER MECHANICAL DWGS	
41	CONCRETE HEADER	5 / DB-L252
42	REPLACE IN KIND EXISTING CONCRETE BANK	
43	CURB CUT PER DB-C210	
44	CONCRETE PLANTER CURB	2 / DB-L264
43	VALLEY GUTTER	

LEGENDS

	DU023 SCOPE LIMIT
	CURB RAMP DETAIL PER DB-C130 TO DB-C132
	TRUNCATED DOMES DETAIL PER DB-C130 TO DB-C132
PA	PLANTING AREA PER LANDSCAPE DWGS
	AREA DRAIN — B / DB-C222 — D008
	VEHICULAR POLE LIGHT FIXTURES PER ELECTRICAL DWGS
	PEDESTRIAN POLE LIGHT FIXTURES PER ELECTRICAL DWGS
	FIRE HYDRANT PER UTILITY COMPOSITE DWGS — D018
	SIGNAGE PER DB-C230
	TREE GRATE PER LANDSCAPE DWGS
	COBBLE PAVING PER LANDSCAPE DWGS
	CATCH BASIN PER UTILITY COMPOSITE DWGS
	PERIMETER FENCE DETAILS PER LANDSCAPE DWGS
	STREETSCAPE LIGHT FIXTURES SEE DU012 PACKAGE (NOT PART OF DU023)
CB	CATCH BASIN — A / DB-C221; B / DB-C221
DCO	DRAIN CLEANOUT — C / DB-C221
DMH	DRAIN MANHOLE — D / DB-C220

GENERAL NOTES

NOTES:

1. FOR IMPROVEMENT ON MONTAGUE-CAPITAL, REFER TO C700 ROADWAY DESIGN DWGS UNDER DU012.
2. FOR UTILITY RELOCATION, REFER TO C700 UTILITY DESIGN DWGS UNDER DU012.
3. FOR SITE UTILITY AND LATERAL CONNECTIONS SEE C700 UTILITY COMPOSITE DWGS.
4. SEE LANDSCAPE PLANS FOR HARDSCAPE FINISHES, COLOR AND SCORING.
5. FOR PAVING LAYOUT INSIDE STATION SEE ARCHITECTURAL DWGS.
6. FOR BUS TRANSIT SHELTER SEE ARCHITECTURAL DWGS.
7. FOR SITE WAYFINDING SIGNS SEE DB-C300.
8. FOR CROSSWALK, SITE STRIPPINGS SEE DB-C300.
9. FOR LIGHT FIXTURE SELECTIONS SEE ELECTRICAL DWGS.
10. FOR STATION SITE FURNISHINGS: BENCH, TRASH RECEPTACLE, NEWSPAPER RACK, BICYCLE RACK AND BICYCLE LOCKERS SEE ARCHITECTURAL DWGS.
11. FOR CURB AND CIVIL ELEMENTS LAYOUT SEE DB-C120 ~ DB-C124.
12. FOR RAMP DETAILS SEE DB-C130 ~ DB-C132.
13. FOR PAVEMENT PLAN AND DETAILS SEE DB-C281, DB-C282 AND LANDSCAPE PAVING DETAILS.
14. FOR GRADING PLAN SEE DB-C200 ~ DB-C203.
15. FOR DRAINAGE PLAN SEE DB-C204 ~ DB-C207.
16. FOR DRAINAGE DETAILS SEE DB-C210 ~ DB-C243.
17. FOR LIGHTING POLE FOOTING, PEDESTRIAN BARRIER FOOTING, PERIMETER FENCE FOOTING, SEE DB-C700 ~DB-C702.
18. FOR SCREEN WALL FOOTING DETAIL SEE DB-C703~ DB-C704.
19. FOR PEDESTRIAN BARRIER FOOTINGS SEE DB-C701.
20. FOR PERIMETER FENCE FOOTINGS SEE DB-C706.
21. FOR CURB WALL AND SHORT WALL AT BIORETENTION AREA SEE DB-C705 ~ DB-C706.
22. REINFORCED CONCRETE:
    A. CONCRETE: f'c = 3600 psi @ 28 DAYS
    B. REINFORCING STEEL: ASTM A706 GRADE 60.
    C. REBAR DEVELOPMENT AND LAP SPLICE: MAKE LAP SPLICES ONLY AT THE LOCATIONS SHOWN ON THE CONTRACT DOCUMENTS OR AS APPROVED BY THE ENGINEER. WHERE LENGTHS ARE NOT SPECIFIED, PROVIDE DEVELOPMENT AND LAP SPLICE LENGTHS AS FOLLOWS:

CONCRETE STRENGTH PSI		BAR SIZE #3	#4	#5	#6	#7	#8
3600	Ld	15"	19"	24"	29"	42"	47"
	Ls	19"	25"	31"	38"	54"	62"

    D. CONCRETE PROTECTION (CONCRETE COVER) FOR REINFORCING STEEL SHALL BE (UNO):
       a. 2" (#6 OR GREATER) FOR FORMED SURFACES EXPOSED TO EARTH OR WEATHER.
       b. 1 1/2" (#5 OR SMALLER) FOR FORMED SURFACES EXPOSED TO EARTH OR WEATHER.

Not For Construction

REV	DATE	BY	SUB	APP	DESCRIPTION
0	20130710				READINESS FOR CONSTRUCTION

DESIGNED BY C. LU
DRAWN BY C. LU
CHECKED BY J. WU
IN CHARGE J. JI
DATE 20130710

REGISTERED PROFESSIONAL ENGINEER — JUN JI — No. C 72794 — Exp. 06/30/14 — CIVIL — STATE OF CALIFORNIA

Skanska Shimmick Herzog — 1436 California Circle, Milpitas, California 95035 — A Joint Venture

KAL KRISHNAN CONSULTING SERVICES — 300 LAKESIDE DRIVE, SUITE #220, OAKLAND, CA 94612

Lockwood, Andrews & Newnam, Inc. — A LEO A DALY COMPANY

T·Y·LIN INTERNATIONAL

SUBMITTED _____ APPROVED _____

VTA BART SILICON VALLEY
BART SILICON VALLEY BERRYESSA EXTENSION

LINE, TRACK, STATIONS, AND SYSTEMS DESIGN UNIT 023
MILPITAS STATION

ABBREVIATIONS, NOTES AND LEGEND

CADD FILENAME C700-S-DB-C002.DWG
SIZE D | SCALE NONE
CONTRACT NO. C700 | REV. 0
AREA CODE | SHEET NO. C002 | PAGE NO. 0019

Jun 26, 2013 – 6:25pm M:\OC PROJECTS\SVBX\5.0 Deliverables\5.2 Drawings\Milpitas Station\Civil\C700-S-DB-C002.dwg
jjudy

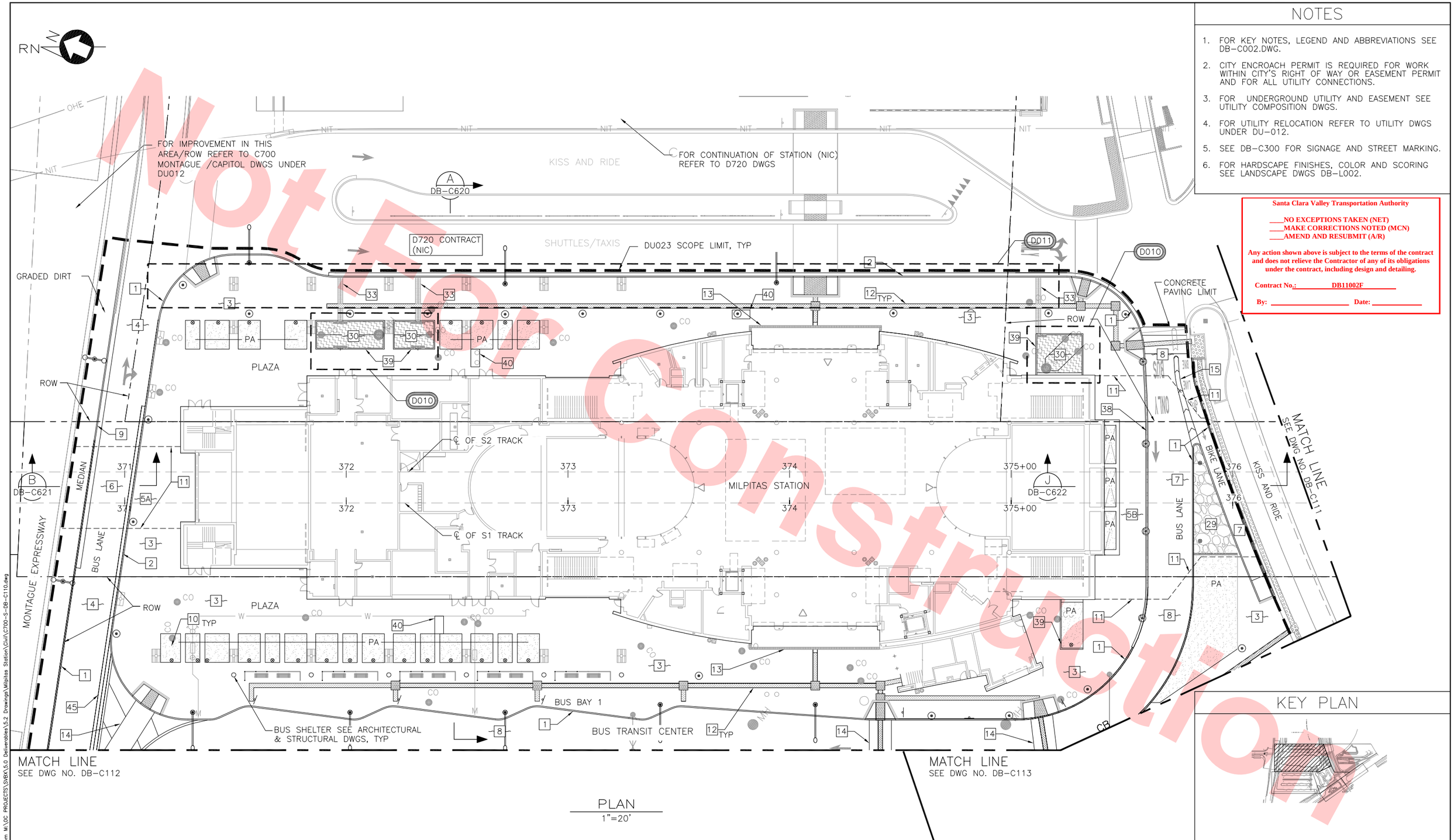

PLAN
1"=20'

NOTES

1. FOR KEY NOTES, LEGEND AND ABBREVIATIONS SEE DB-C002.DWG.
2. CITY ENCROACH PERMIT IS REQUIRED FOR WORK WITHIN CITY'S RIGHT OF WAY OR EASEMENT PERMIT AND FOR ALL UTILITY CONNECTIONS.
3. FOR UNDERGROUND UTILITY AND EASEMENT SEE UTILITY COMPOSITION DWGS.
4. FOR UTILITY RELOCATION REFER TO UTILITY DWGS UNDER DU-012.
5. SEE DB-C300 FOR SIGNAGE AND STREET MARKING.
6. FOR HARDSCAPE FINISHES, COLOR AND SCORING SEE LANDSCAPE DWGS DB-L002.

Santa Clara Valley Transportation Authority

____NO EXCEPTIONS TAKEN (NET)
____MAKE CORRECTIONS NOTED (MCN)
____AMEND AND RESUBMIT (A/R)

Any action shown above is subject to the terms of the contract and does not relieve the Contractor of any of its obligations under the contract, including design and detailing.

Contract No.: DB11002F

By: _____ **Date:** _____

KEY PLAN

Not For Construction

REV	DATE	BY	SUB	APP	DESCRIPTION
0	20130710				READINESS FOR CONSTRUCTION

DESIGNED BY J. WU
DRAWN BY J. WU
CHECKED BY J. JI
IN CHARGE J. JI
DATE 20130710

REGISTERED PROFESSIONAL ENGINEER JUN JI No. C 72794 Exp. 06/30/14 CIVIL STATE OF CALIFORNIA

Skanska Shimmick Herzog
1436 California Circle
Milpitas, California 95035
A Joint Venture

KAL KRISHNAN CONSULTING SERVICES
300 LAKESIDE DRIVE, SUITE #220
OAKLAND, CA 94612

Lockwood, Andrews & Newnam, Inc. A LEO A DALY COMPANY
T·Y·LIN INTERNATIONAL

SUBMITTED _____
APPROVED _____

VTA BART SILICON VALLEY
BART SILICON VALLEY BERRYESSA EXTENSION

LINE, TRACK, STATIONS AND SYSTEMS
DESIGN UNIT 023
MILPITAS STATION
SITE PLAN

SHEET 1 OF 4

CADD FILENAME C700-S-DB-C110.dwg
SIZE D | SCALE 1"=20'
CONTRACT NO. C700 | REV. 0
AREA CODE DB | SHEET NO. C110 | PAGE NO. 0020

Jun 25, 2013 - 4:14pm M:\DC PROJECTS\SVBX\5.0 Deliverables\5.2 Drawings\Milpitas Station\Civil\C700-S-DB-C110.dwg
judy

NOTES

1. FOR KEY NOTES, LEGEND AND ABBREVIATIONS SEE DB–C002.DWG.
2. CITY ENCROACH PERMIT IS REQUIRED FOR WORK WITHIN CITY'S RIGHT OF WAY OR EASEMENT PERMIT AND FOR ALL UTILITY CONNECTIONS.
3. FOR UNDERGROUND UTILITY AND EASEMENT SEE UTILITY COMPOSITION DWGS.
4. FOR UTILITY RELOCATION REFER TO UTILITY DWGS UNDER DU–012.
5. SEE DB–C300 FOR SIGNAGE AND STREET MARKING.
6. FOR HARDSCAPE FINISHES, COLOR AND SCORING SEE LANDSCAPE DWGS.

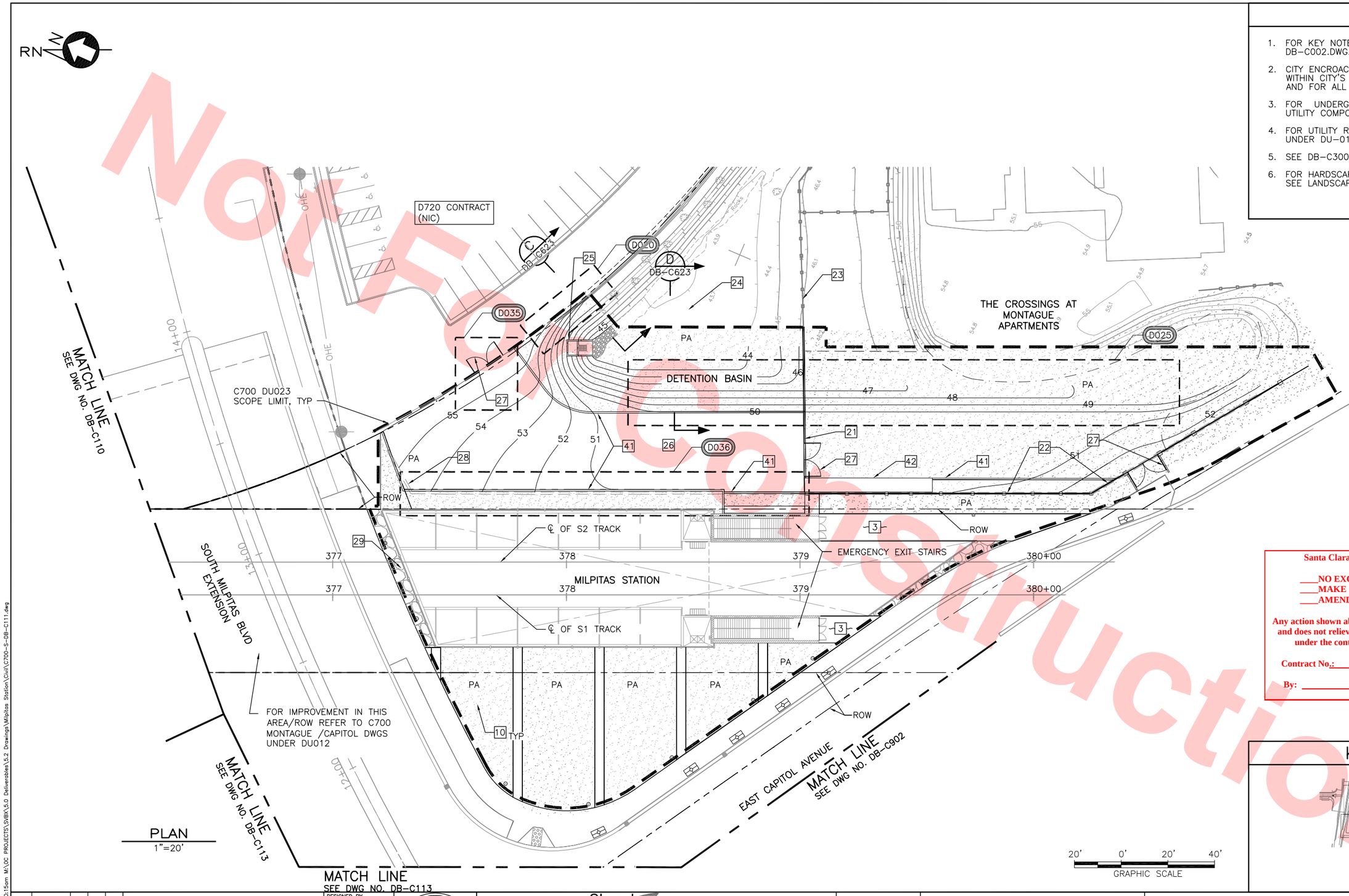

PLAN
1"=20'

Not For Construction

Santa Clara Valley Transportation Authority

____NO EXCEPTIONS TAKEN (NET)
____MAKE CORRECTIONS NOTED (MCN)
____AMEND AND RESUBMIT (A/R)

Any action shown above is subject to the terms of the contract and does not relieve the Contractor of any of its obligations under the contract, including design and detailing.

Contract No.: DB11002F

By: _____ **Date:** _____

KEY PLAN

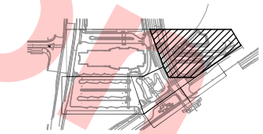

REV	DATE	BY	SUB	APP	DESCRIPTION
0	20130710				READINESS FOR CONSTRUCTION

DESIGNED BY J. WU
DRAWN BY J. WU
CHECKED BY J. JI
IN CHARGE J. JI
DATE 20130710

REGISTERED PROFESSIONAL ENGINEER JUN JI No. C 72794 Exp. 06/30/14 CIVIL STATE OF CALIFORNIA

Skanska Shimmick Herzog
1436 California Circle
Milpitas, California 95035
A Joint Venture

KAL KRISHNAN CONSULTING SERVICES
300 LAKESIDE DRIVE, SUITE #220
OAKLAND, CA 94612

Lockwood, Andrews & Newnam, Inc. A CH2M HILL COMPANY
T·Y·LIN INTERNATIONAL

SUBMITTED _____
APPROVED _____

NOT FOR CONSTRUCTION

VTA BART SILICON VALLEY
BART SILICON VALLEY BERRYESSA EXTENSION

LINE, TRACK, STATIONS AND SYSTEMS
DESIGN UNIT 023
MILPITAS STATION
SITE PLAN

SHEET 2 OF 4

CADD FILENAME C700–S–DB–C111.dwg
SIZE D | SCALE 1"=20'
CONTRACT NO. C700 | REV. 0
AREA CODE DB | SHEET NO. C111 | PAGE NO. 0021

Jun 26, 2013 – 10:15am MA\OC PROJECTS\SVBX\5.0 Deliverables\5.2 Drawings\Milpitas Station\Civil\C700–S–DB–C111.dwg

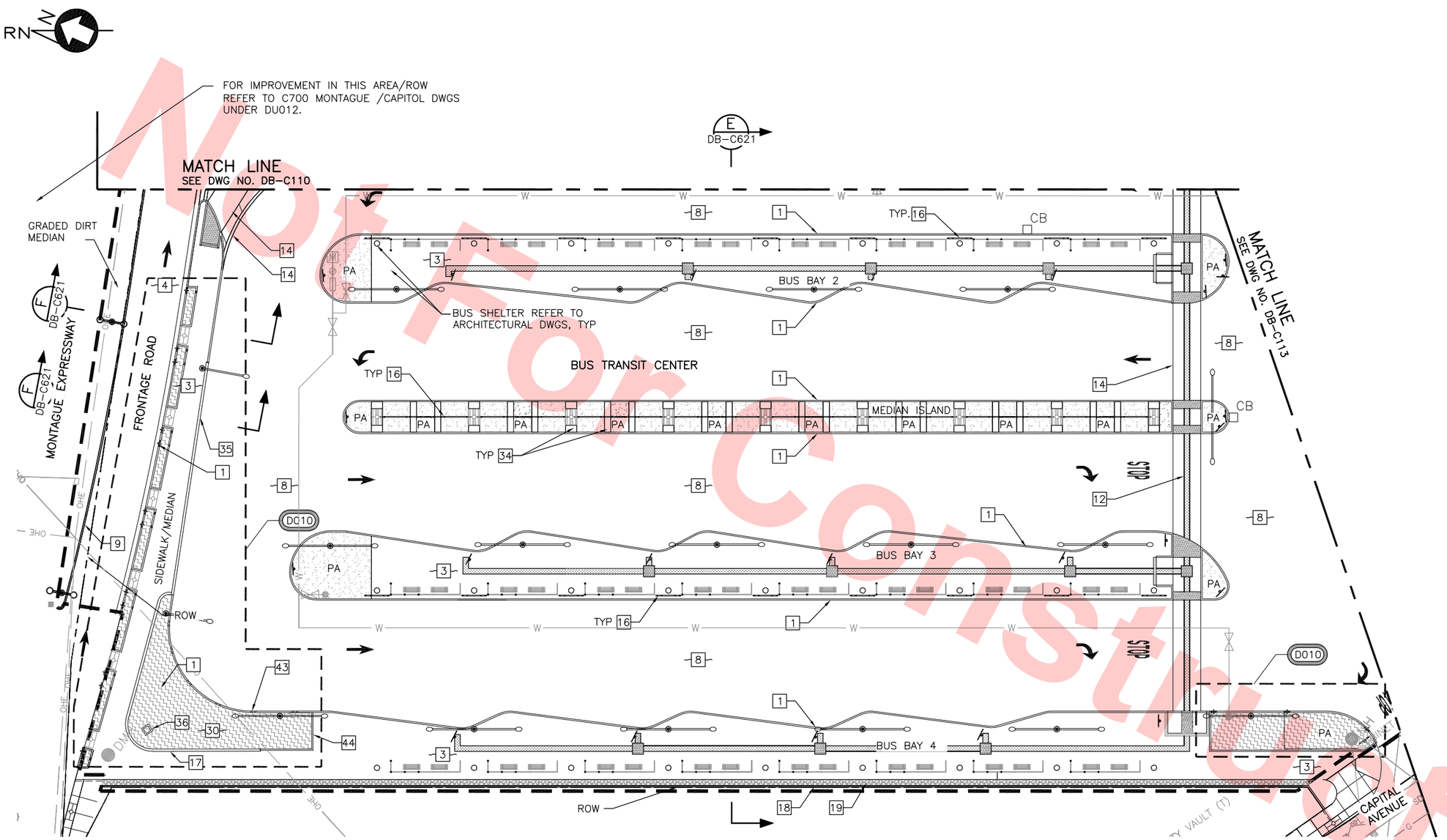

PLAN
1"=20'

20' 0' 20' 40'
GRAPHIC SCALE

NOTES

1. FOR KEY NOTES, LEGEND AND ABBREVIATIONS SEE DB-C002.DWG.
2. CITY ENCROACH PERMIT IS REQUIRED FOR WORK WITHIN CITY'S RIGHT OF WAY OR EASEMENT PERMIT AND FOR ALL UTILITY CONNECTIONS.
3. FOR UNDERGROUND UTILITY AND EASEMENT SEE UTILITY COMPOSITION DWGS.
4. FOR UTILITY RELOCATION REFER TO UTILITY DWGS UNDER DU-012.
5. SEE DB-C300 FOR SIGNAGE AND STREET MARKING.
6. FOR HARDSCAPE FINISHES, COLOR AND SCORING SEE LANDSCAPE DWGS DB-L002.

Santa Clara Valley Transportation Authority

____NO EXCEPTIONS TAKEN (NET)
____MAKE CORRECTIONS NOTED (MCN)
____AMEND AND RESUBMIT (A/R)

Any action shown above is subject to the terms of the contract and does not relieve the Contractor of any of its obligations under the contract, including design and detailing.

Contract No.: DB11002F

By: _____ Date: _____

KEY PLAN

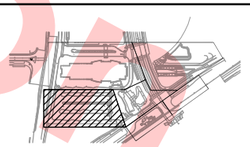

Not For Construction

REV	DATE	BY	SUB	APP	DESCRIPTION
0	20130710				READINESS FOR CONSTRUCTION

DESIGNED BY J. WU
DRAWN BY J. WU
CHECKED BY J. JI
IN CHARGE J. JI
DATE 20130710

REGISTERED PROFESSIONAL ENGINEER JUN JI No. C 72794 Exp. 06/30/14 CIVIL STATE OF CALIFORNIA

Skanska Shimmick Herzog
1436 California Circle Milpitas, California 95035
A Joint Venture

KAL KRISHNAN CONSULTING SERVICES
300 LAKESIDE DRIVE, SUITE #220 OAKLAND, CA 94612

SUBMITTED

Lockwood, Andrews & Newnam, Inc. A LEO A DALY COMPANY
T·Y·LIN INTERNATIONAL

APPROVED

VTA BART SILICON VALLEY
BART SILICON VALLEY BERRYESSA EXTENSION

LINE, TRACK, STATIONS AND SYSTEMS
DESIGN UNIT 023
MILPITAS STATION
SITE PLAN

SHEET 3 OF 4

CADD FILENAME C700-S-DB-C112.dwg
SIZE D | SCALE 1"=20'
CONTRACT NO. C700 | REV. 0
AREA CODE DB | SHEET NO. C112 | PAGE NO. 0022

jurdy Jun 26, 2013 - 10:28am M:\QC PROJECTS\SVBX\5.0 Deliverables\5.2 Drawings\Milpitas Station\Civil\C700-S-DB-C112.dwg

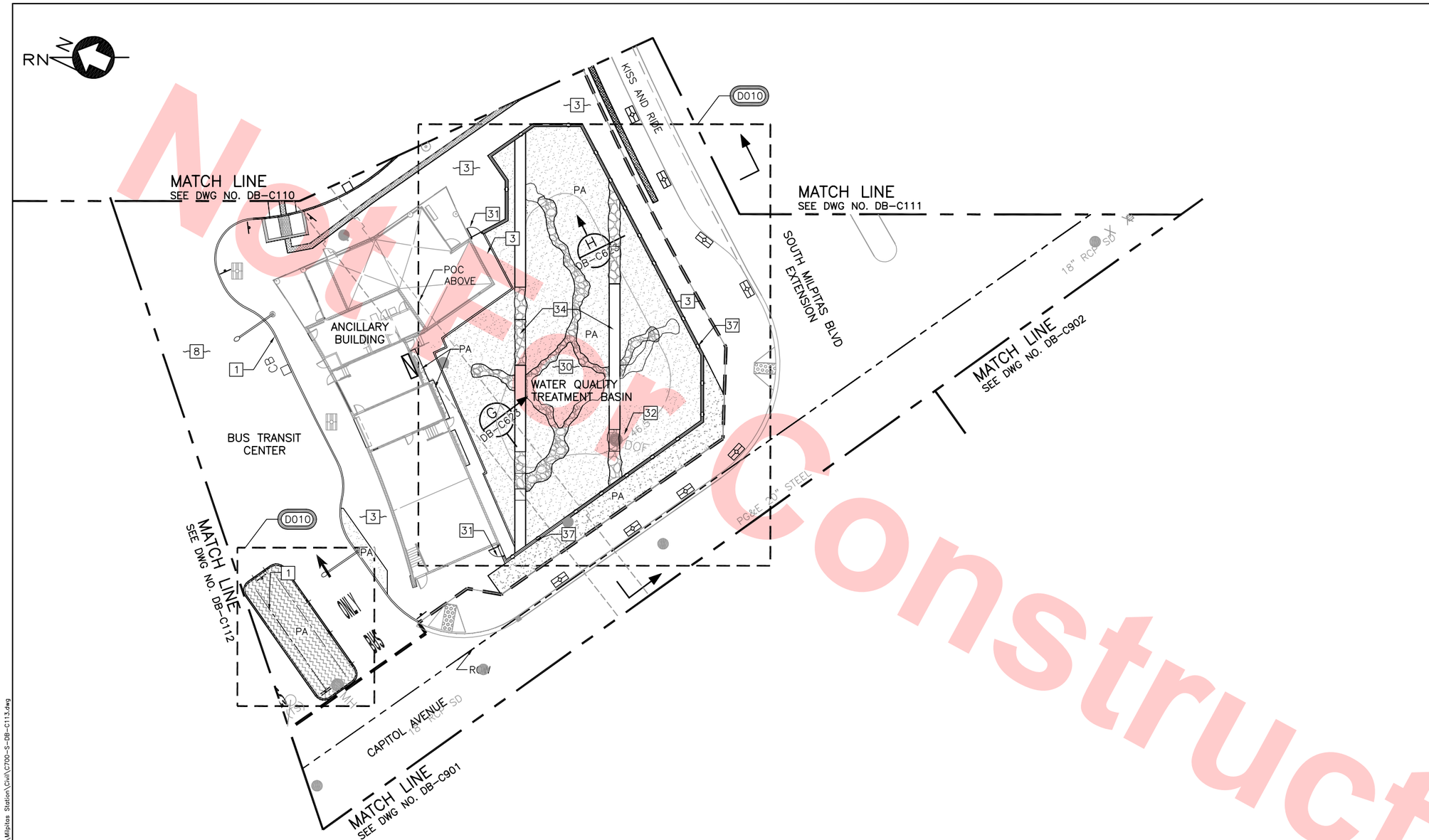

PLAN
1"=20'

20' 0' 20' 40'
GRAPHIC SCALE

NOTES

1. FOR KEY NOTES, LEGEND AND ABBREVIATIONS SEE DB-C002.DWG.
2. CITY ENCROACH PERMIT IS REQUIRED FOR WORK WITHIN CITY'S RIGHT OF WAY OR EASEMENT PERMIT AND FOR ALL UTILITY CONNECTIONS.
3. FOR UNDERGROUND UTILITY AND EASEMENT SEE UTILITY COMPOSITION DWGS.
4. FOR UTILITY RELOCATION REFER TO UTILITY DWGS UNDER DU-012.
5. SEE DB-C300 FOR SIGNAGE AND STREET MARKING.
6. FOR HARDSCAPE FINISHES, COLOR AND SCORING SEE LANDSCAPE DWGS DB-L002.

Santa Clara Valley Transportation Authority

____NO EXCEPTIONS TAKEN (NET)
____MAKE CORRECTIONS NOTED (MCN)
____AMEND AND RESUBMIT (A/R)

Any action shown above is subject to the terms of the contract and does not relieve the Contractor of any of its obligations under the contract, including design and detailing.

Contract No.: DB11002F

By: _____ Date: _____

KEY PLAN

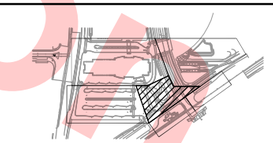

Not For Construction

REV	DATE	BY	SUB	APP	DESCRIPTION
0	20130710				READINESS FOR CONSTRUCTION

DESIGNED BY J. WU
DRAWN BY J. WU
CHECKED BY J. JI
IN CHARGE J. JI
DATE 20130710

REGISTERED PROFESSIONAL ENGINEER JUN JI No. C 72794 Exp. 06/30/14 CIVIL STATE OF CALIFORNIA

Skanska Shimmick Herzog
1436 California Circle
Milpitas, California 95035
A Joint Venture

KAL KRISHNAN CONSULTING SERVICES
300 LAKESIDE DRIVE, SUITE #220
OAKLAND, CA 94612
SUBMITTED

Lockwood, Andrews & Newnam, Inc. A LEO A DALY COMPANY
T·Y·LIN INTERNATIONAL
APPROVED

VTA BART SILICON VALLEY
BART SILICON VALLEY BERRYESSA EXTENSION

LINE, TRACK, STATIONS AND SYSTEMS
DESIGN UNIT 023
MILPITAS STATION
SITE PLAN

SHEET 4 OF 4

CADD FILENAME C700-S-DB-C113.dwg
SIZE D | SCALE 1"=20'
CONTRACT NO. C700 | REV. 0
AREA CODE DB | SHEET NO. C113 | PAGE NO. 0023

judy Jun 26, 2013 - 6:19pm M:\CC PROJECTS\SVBX\5.0 Deliverables\5.2 Drawings\Milpitas Station\Civil\C700-S-DB-C113.dwg

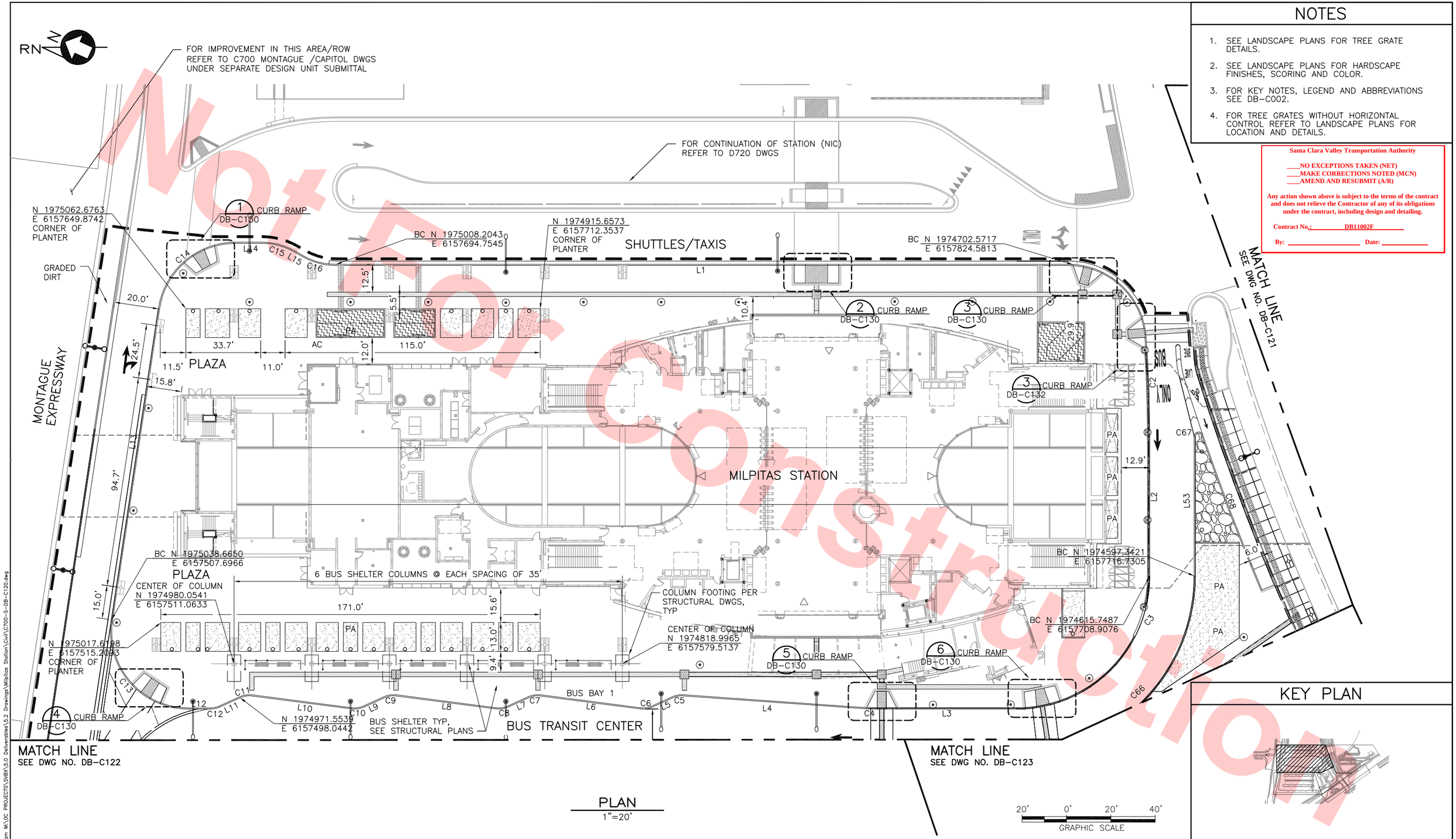

PLAN
1"=20'

NOTES

1. SEE LANDSCAPE PLANS FOR TREE GRATE DETAILS.
2. SEE LANDSCAPE PLANS FOR HARDSCAPE FINISHES, SCORING AND COLOR.
3. FOR KEY NOTES, LEGEND AND ABBREVIATIONS SEE DB-C002.
4. FOR TREE GRATES WITHOUT HORIZONTAL CONTROL REFER TO LANDSCAPE PLANS FOR LOCATION AND DETAILS.

Santa Clara Valley Transportation Authority

____NO EXCEPTIONS TAKEN (NET)
____MAKE CORRECTIONS NOTED (MCN)
____AMEND AND RESUBMIT (A/R)

Any action shown above is subject to the terms of the contract and does not relieve the Contractor of any of its obligations under the contract, including design and detailing.

Contract No.: DB11002F

By: _____ Date: _____

KEY PLAN

Not For Construction

REV	DATE	BY	SUB	APP	DESCRIPTION
0	20130710				READINESS FOR CONSTRUCTION

DESIGNED BY C. O'GARA
DRAWN BY C. O'GARA
CHECKED BY J. WU
IN CHARGE J. JI
DATE 20130710

REGISTERED PROFESSIONAL ENGINEER JUN JI No. C 72794 Exp. 06/30/14 CIVIL STATE OF CALIFORNIA

Skanska Shimmick Herzog
1436 California Circle
Milpitas, California 95035
A Joint Venture

KAL KRISHNAN CONSULTING SERVICES
300 LAKESIDE DRIVE, SUITE #220
OAKLAND, CA 94612

SUBMITTED

Lockwood, Andrews & Newnam, Inc. A LEO A DALY COMPANY
T·Y·LIN INTERNATIONAL

APPROVED

VTA BART SILICON VALLEY
BART SILICON VALLEY BERRYESSA EXTENSION

LINE, TRACK, STATIONS AND SYSTEMS DESIGN UNIT 023
MILPITAS STATION
LAYOUT PLAN

SHEET 1 OF 4

CADD FILENAME C700-S-DB-C120.dwg
SIZE D | SCALE 1"=20'
CONTRACT NO. C700 | REV. 0
AREA CODE DB | SHEET NO. C120 | PAGE NO. 0024

Jun 26, 2013 – 10:41am M:\OC PROJECTS\SVBX\5.0 Deliverables\5.2 Drawings\Milpitas Station\Civil\C700-S-DB-C120.dwg
judy

NOTES

1. SEE LANDSCAPE PLANS FOR TREE GRATE DETAILS.
2. SEE LANDSCAPE PLANS FOR HARDSCAPE FINISHES AND SCORING.
3. FOR KEY NOTES, LEGEND AND ABBREVIATIONS SEE DB–C002.

Santa Clara Valley Transportation Authority

____NO EXCEPTIONS TAKEN (NET)
____MAKE CORRECTIONS NOTED (MCN)
____AMEND AND RESUBMIT (A/R)

Any action shown above is subject to the terms of the contract and does not relieve the Contractor of any of its obligations under the contract, including design and detailing.

Contract No.: DB11002F

By: _____ Date: _____

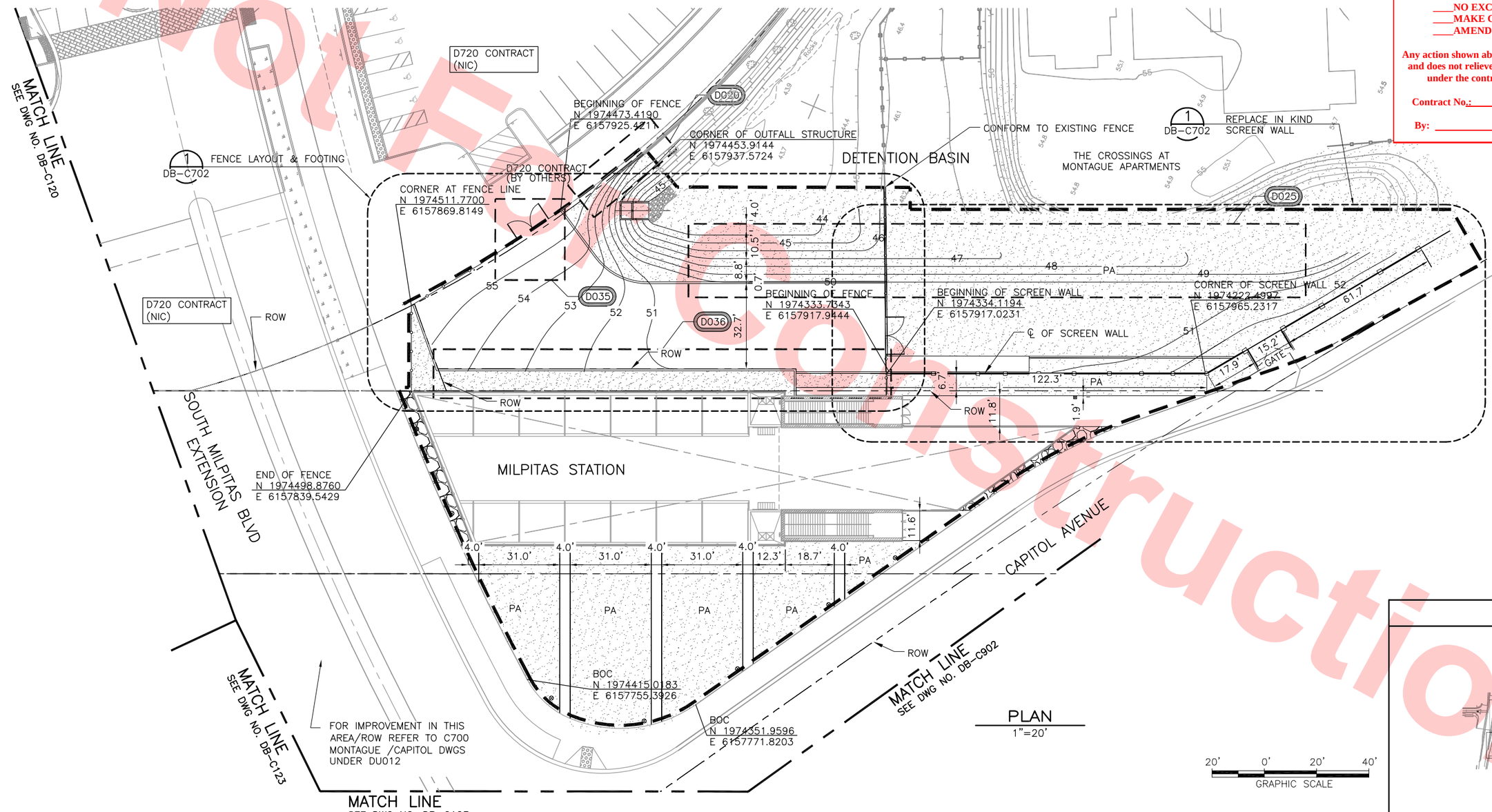

PLAN
1"=20'

KEY PLAN

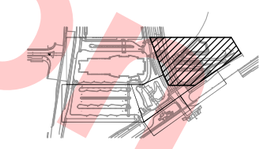

Not for Construction

REV	DATE	BY	SUB	APP	DESCRIPTION
0	20130710				READINESS FOR CONSTRUCTION

DESIGNED BY C. O'GARA
DRAWN BY C. O'GARA
CHECKED BY J. WU
IN CHARGE J. JI
DATE 20130710

REGISTERED PROFESSIONAL ENGINEER JUN JI No. C 72794 Exp. 06/30/14 CIVIL STATE OF CALIFORNIA

Skanska Shimmick Herzog
1436 California Circle
Milpitas, California 95035
A Joint Venture

KAL KRISHNAN CONSULTING SERVICES
300 LAKESIDE DRIVE, SUITE #220
OAKLAND, CA 94612

SUBMITTED

Lockwood, Andrews & Newnam, Inc. A CH2M HILL COMPANY
T·Y·LIN INTERNATIONAL

APPROVED

VTA BART SILICON VALLEY
BART SILICON VALLEY BERRYESSA EXTENSION

LINE, TRACK, STATIONS AND SYSTEMS
DESIGN UNIT 023
MILPITAS STATION
LAYOUT PLAN

SHEET 2 OF 4

CADD FILENAME C700–S–DB–C121.dwg
SIZE D | SCALE 1"=20'
CONTRACT NO. C700 | REV. 0
AREA CODE DB | SHEET NO. C121 | PAGE NO. 0025

Jun 26, 2013 – 10:46am M:\DC PROJECTS\SVBX\5.0 Deliverables\5.2 Drawings\Milpitas Station\Civil\C700-S-DB-C121.dwg

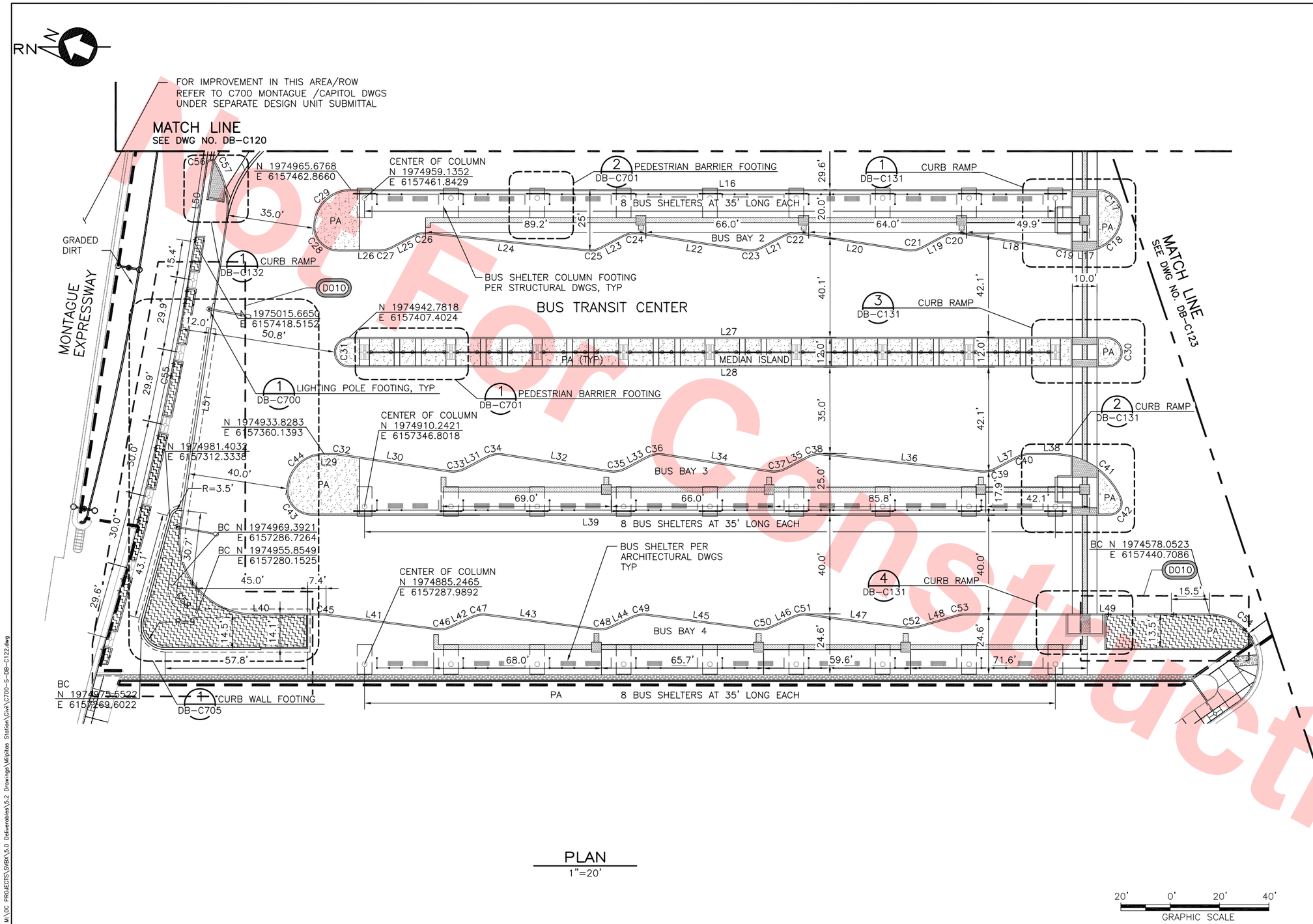

PLAN
1"=20'

20' 0' 20' 40'
GRAPHIC SCALE

NOTES

1. SEE LANDSCAPE PLANS FOR TREE GRATE DETAILS.
2. SEE LANDSCAPE PLANS FOR HARDSCAPE FINISHES, SCORING AND COLOR.
3. FOR KEY NOTES, LEGEND AND ABBREVIATIONS SEE DB-C002.
4. FOR TREE GRATES WITHOUT HORIZONTAL CONTROL SEE LANDSCAPE PLANS FOR LOCATION AND DETAILS.

Santa Clara Valley Transportation Authority

____NO EXCEPTIONS TAKEN (NET)
____MAKE CORRECTIONS NOTED (MCN)
____AMEND AND RESUBMIT (A/R)

Any action shown above is subject to the terms of the contract and does not relieve the Contractor of any of its obligations under the contract, including design and detailing.

Contract No.: DB11002F

By: _____ Date: _____

KEY PLAN

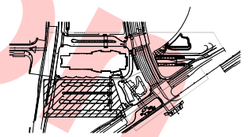

Not For Construction

REV	DATE	BY	SUB	APP	DESCRIPTION
0	20130710				READINESS FOR CONSTRUCTION

DESIGNED BY C. O'GARA
DRAWN BY C. O'GARA
CHECKED BY J. WU
IN CHARGE J. JI
DATE 20130710

REGISTERED PROFESSIONAL ENGINEER JUN JI No. C 72794 Exp. 06/30/14 CIVIL STATE OF CALIFORNIA

Skanska Shimmick Herzog
1436 California Circle
Milpitas, California 95035
A Joint Venture

KAL KRISHNAN CONSULTING SERVICES
300 LAKESIDE DRIVE, SUITE #220
OAKLAND, CA 94612

Lockwood, Andrews & Newnam, Inc. A LEO A DALY COMPANY
T·Y·LIN INTERNATIONAL

SUBMITTED _____
APPROVED _____

VTA BART SILICON VALLEY
BART SILICON VALLEY BERRYESSA EXTENSION

LINE, TRACK, STATIONS AND SYSTEMS
DESIGN UNIT 023
MILPITAS STATION
LAYOUT PLAN

SHEET 3 OF 4

CADD FILENAME C700-S-DB-C122.dwg
SIZE D | SCALE 1"=20'
CONTRACT NO. C700 | REV. 0
AREA CODE DB | SHEET NO. C122 | PAGE NO. 0026

judy Jun 26, 2013 – 10:50am M:\OC PROJECTS\SVBX\5.0 Deliverables\5.2 Drawings\Milpitas Station\Civil\C700-S-DB-C122.dwg

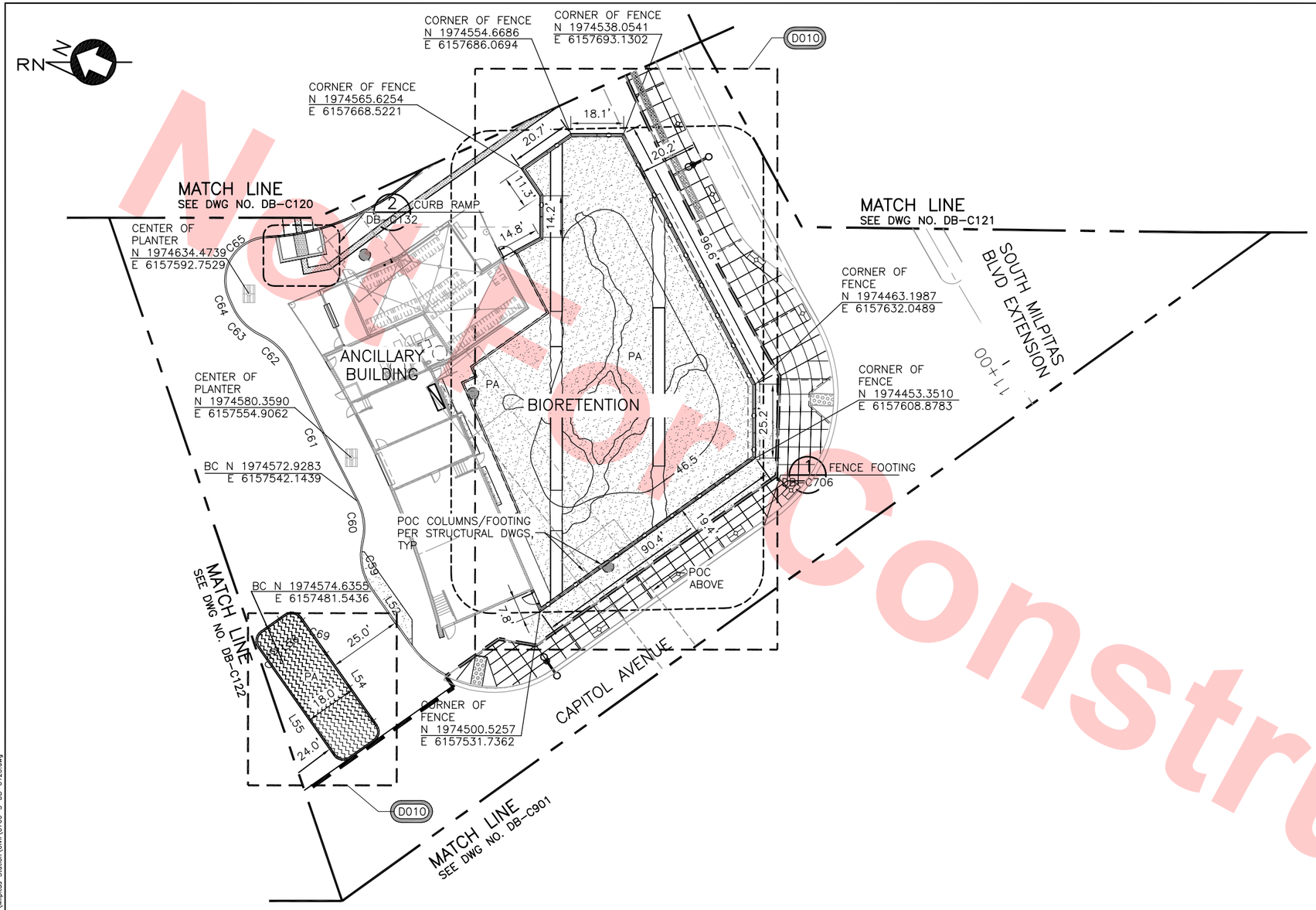

PLAN
1"=20'

20' 0' 20' 40'
GRAPHIC SCALE

NOTES

1. SEE LANDSCAPE PLANS FOR TREE GRATE DETAILS.
2. SEE LANDSCAPE PLANS FOR HARDSCAPE FINISHES AND SCORING.
3. FOR KEY NOTES, LEGEND AND ABBREVIATIONS SEE DB-C002.

Santa Clara Valley Transportation Authority

____NO EXCEPTIONS TAKEN (NET)
____MAKE CORRECTIONS NOTED (MCN)
____AMEND AND RESUBMIT (A/R)

Any action shown above is subject to the terms of the contract and does not relieve the Contractor of any of its obligations under the contract, including design and detailing.

Contract No.: DB11002F

By: _____ **Date:** _____

KEY PLAN

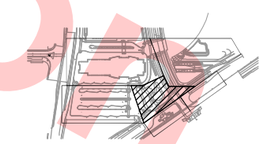

Not For Construction

REV	DATE	BY	SUB	APP	DESCRIPTION
0	20130710				READINESS FOR CONSTRUCTION

DESIGNED BY C. O'GARA
DRAWN BY C. O'GARA
CHECKED BY J. WU
IN CHARGE J. JI
DATE 20130710

REGISTERED PROFESSIONAL ENGINEER JUN JI No. C 72794 Exp. 06/30/14 CIVIL STATE OF CALIFORNIA

Skanska Shimmick Herzog
1436 California Circle
Milpitas, California 95035
A Joint Venture

KAL KRISHNAN CONSULTING SERVICES
300 LAKESIDE DRIVE, SUITE #220
OAKLAND, CA 94612
SUBMITTED

Lockwood, Andrews & Newnam, Inc. A LEO A DALY COMPANY
T·Y·LIN INTERNATIONAL
APPROVED

VTA BART SILICON VALLEY
BART SILICON VALLEY BERRYESSA EXTENSION

LINE, TRACK, STATIONS AND SYSTEMS
DESIGN UNIT 023
MILPITAS STATION
LAYOUT PLAN
SHEET 4 OF 4

CADD FILENAME C700-S-DB-C123.dwg
SIZE D | SCALE 1"=20'
CONTRACT NO. C700 | REV. 0
AREA CODE DB | SHEET NO. C123 | PAGE NO. 0027

judy Jun 26, 2013 – 10:54am M:\CC PROJECTS\SVBX\5.0 Deliverables\5.2 Drawings\Milpitas Station\Civil\C700-S-DB-C123.dwg

LINE TABLE		
LINE	LENGTH	BEARING
L1	330.11	S23°01'27"E
L2	62.84	N66°58'27"E
L3	65.78	N23°01'27"W
L4	82.63	N18°58'33"W
L5	10.11	N47°32'37"W
L6	45.30	N15°37'33"W
L7	10.11	N47°32'37"W
L8	45.30	N15°37'33"W
L9	10.11	N47°32'37"W
L10	45.30	N15°37'33"W
L11	10.11	N47°32'37"W
L12	10.03	N23°01'27"W
L13	142.07	N75°34'12"E
L14	11.96	S23°01'26"E
L15	3.92	S06°58'34"W
L16	302.72	N23°01'27"W
L17	4.25	S23°01'27"E
L18	45.74	S14°22'34"E
L19	10.11	S51°02'55"E
L20	44.11	S14°05'09"E
L21	10.11	S51°02'55"E
L22	44.10	S14°05'07"E
L23	10.11	S51°02'55"E
L24	64.90	S16°51'01"E
L25	10.11	S51°02'55"E
L26	16.93	S23°01'27"E
L27	307.35	N23°01'27"W
L28	307.35	S23°01'27"E
L29	4.25	N23°01'27"W
L30	45.74	N14°22'34"W
L31	10.11	N51°02'55"W
L32	44.11	N14°05'09"W
L33	10.11	N51°02'55"W
L34	44.10	N14°05'07"W
L35	10.11	N51°02'55"W
L36	64.90	N16°51'01"W
L37	10.11	N51°02'55"W
L38	9.94	N23°01'27"W
L39	323.65	S23°01'27"E
L40	51.14	N23°01'27"W
L41	45.30	N15°37'33"W
L42	10.11	N47°32'37"W
L43	45.30	N15°37'33"W
L44	10.11	N47°32'37"W
L45	45.30	N15°37'33"W
L46	10.11	N47°32'37"W
L47	40.96	N15°37'33"W
L48	16.95	N39°00'30"W
L49	99.37	S23°01'27"E
L50	32.09	S75°34'12"W
L51	149.23	N75°34'12"E

LINE TABLE		
LINE	LENGTH	BEARING
L52	23.14	N31°50'43"E
L53	62.94	N66°58'27"E
L54	32.00	N31°50'43"E
L55	32.00	S31°50'43"W
L56	10.00	N58°09'17"W

CURVE TABLE			
CURVE	LENGTH	RADIUS	DELTA
C1	52.33	35.00	85°40'16"
C2	45.32	600.00	4°19'38"
C3	94.25	60.00	90°00'06"
C4	1.29	10.00	7°23'55"
C5	5.57	10.00	31°55'04"
C6	5.57	10.00	31°55'04"
C7	5.57	10.00	31°55'04"
C8	5.57	10.00	31°55'04"
C9	5.57	10.00	31°55'04"
C10	5.57	10.00	31°55'04"
C11	5.57	10.00	31°55'04"
C12	4.28	10.00	24°31'10"
C13	60.23	35.00	98°35'39"
C14	49.73	35.00	81°24'22"
C15	15.71	30.00	30°00'00"
C16	15.71	30.00	30°00'00"
C17	17.21	10.00	98°35'39"
C18	21.31	15.00	81°24'21"
C19	1.51	10.00	8°38'04"
C20	6.40	10.00	36°40'23"
C21	6.45	10.00	36°57'48"
C22	6.45	10.00	36°57'48"
C23	6.45	10.00	36°57'51"
C24	6.45	10.00	36°57'51"
C25	5.97	10.00	34°11'54"
C26	5.97	10.00	34°11'55"
C27	4.90	10.00	28°01'28"
C28	15.71	10.00	90°00'00"
C29	23.56	15.00	90°00'00"
C30	18.85	6.00	180°00'00"
C31	18.85	6.00	180°00'00"
C32	1.51	10.00	8°38'04"
C33	6.40	10.00	36°40'23"
C34	6.45	10.00	36°57'48"
C35	6.45	10.00	36°57'48"
C36	6.45	10.00	36°57'51"
C37	6.45	10.00	36°57'51"
C38	5.97	10.00	34°11'54"
C39	5.97	10.00	34°11'55"
C40	4.90	10.00	28°01'28"
C41	34.78	30.00	66°25'19"
C42	9.91	5.00	113°34'31"
C43	17.21	10.00	98°35'39"
C44	21.31	15.00	81°24'21"
C45	1.29	10.00	7°23'55"
C46	5.57	10.00	31°55'04"
C47	5.57	10.00	31°55'04"
C48	5.57	10.00	31°55'04"
C49	5.57	10.00	31°55'04"
C50	5.57	10.00	31°55'04"
C51	5.57	10.00	31°55'04"

CURVE TABLE			
CURVE	LENGTH	RADIUS	DELTA
C52	4.08	10.00	23°22'58"
C53	2.79	10.00	15°58'44"
C54	50.57	20.00	144°52'10"
C55	118.71	1190.00	5°42'56"
C56	4.86	2.00	139°15'03"
C57	24.89	35.00	40°44'57"
C58	17.21	10.00	98°35'39"
C59	16.97	20.00	48°36'30"
C60	14.34	20.00	41°04'24"
C61	51.77	1059.50	2°47'59"
C62	14.21	20.00	40°42'09"
C63	14.71	20.00	42°07'36"
C64	3.13	1069.50	00°10'03"
C65	29.01	15.00	110°49'00"
C66	122.33	80.00	87°36'51"
C67	5.62	2.00	161°06'34"
C68	74.81	1075.00	3°59'15"
C69	6.28	4.00	90°00'00"
C70	6.28	4.00	90°00'00"

Santa Clara Valley Transportation Authority

____NO EXCEPTIONS TAKEN (NET)
____MAKE CORRECTIONS NOTED (MCN)
____AMEND AND RESUBMIT (A/R)

Any action shown above is subject to the terms of the contract and does not relieve the Contractor of any of its obligations under the contract, including design and detailing.

Contract No.: DB11002F

By: _____ **Date:** _____

Not For Construction

REV	DATE	BY	SUB	APP	DESCRIPTION
0	20130710				READINESS FOR CONSTRUCTION

DESIGNED BY C. O'GARA
DRAWN BY C. O'GARA
CHECKED BY J. WU
IN CHARGE J. JI
DATE 20130710

REGISTERED PROFESSIONAL ENGINEER JUN JI No. C 72794 Exp. 06/30/14 CIVIL STATE OF CALIFORNIA

Skanska Shimmick Herzog
1436 California Circle
Milpitas, California 95035
A Joint Venture

KAL KRISHNAN CONSULTING SERVICES
300 LAKESIDE DRIVE, SUITE #220
OAKLAND, CA 94612

SUBMITTED _____

Lockwood, Andrews & Newnam, Inc. A CH2M HILL COMPANY
T·Y·LIN INTERNATIONAL

APPROVED _____

VTA BART SILICON VALLEY
BART SILICON VALLEY BERRYESSA EXTENSION

LINE, TRACK, STATIONS AND SYSTEMS
DESIGN UNIT 023
MILPITAS STATION
LINE AND CURVE TABLE

CADD FILENAME C700-S-DB-C124.dwg
SIZE D | SCALE NONE
CONTRACT NO. C700 | REV. 0
AREA CODE DB | SHEET NO. C124 | PAGE NO. 0028

judy Jun 26, 2013 – 10:56am M:\DC PROJECTS\SVBX\5.0 Deliverables\5.2 Drawings\Milpitas Station\Civil\C700-S-DB-C124.dwg

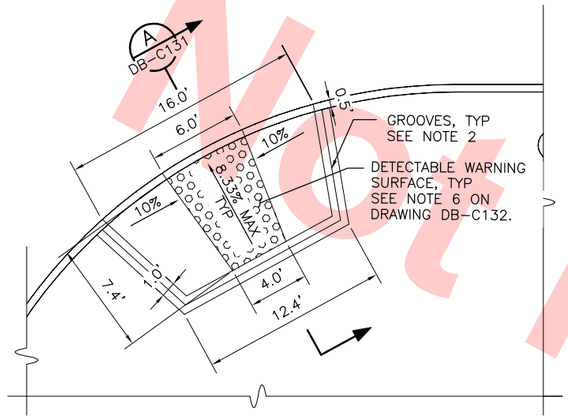

DETAIL 1 (DB-C130 / DB-C120)
SCALE: 1"=5'

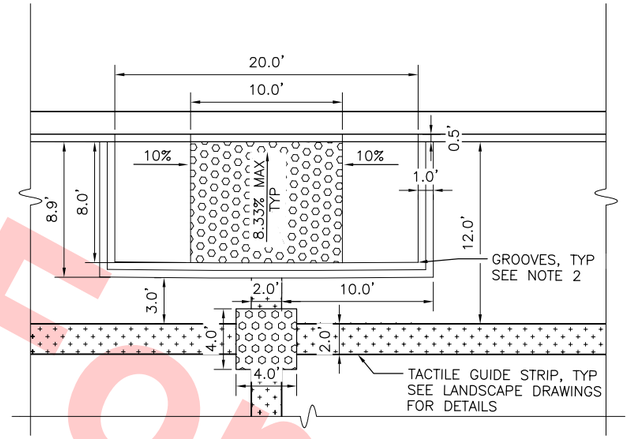

DETAIL 2 (DB-C130 / DB-C120)
SCALE: 1"=5'

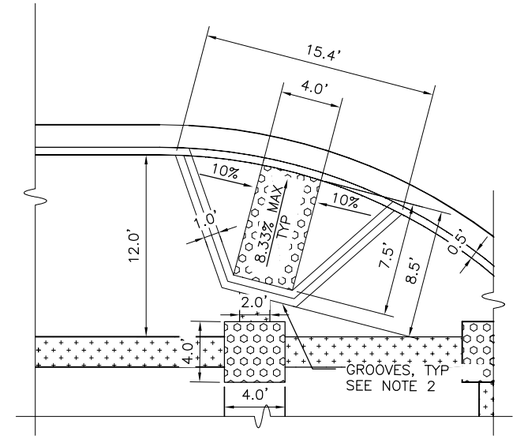

DETAIL 3 (DB-C130 / DB-C120)
SCALE: 1"=5'

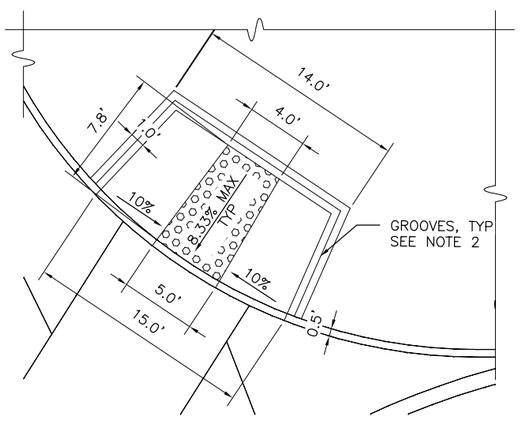

DETAIL 4 (DB-C130 / DB-C120)
SCALE: 1"=5'

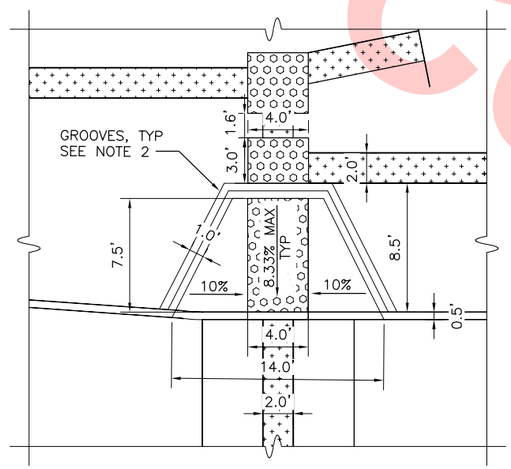

DETAIL 5 (DB-C130 / DB-C120)
SCALE: 1"=5'

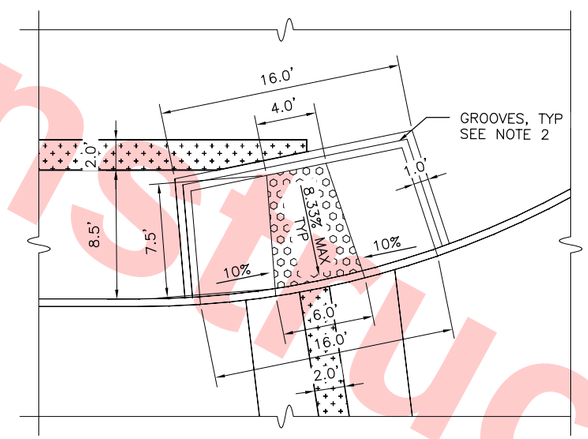

DETAIL 6 (DB-C130 / DB-C120)
SCALE: 1"=5'

NOTES

1. TACTILE GUIDE STRIP FINISH, PATTERN AND COLOR PER LANDSCAPE DRAWINGS.
2. THE CURB RAMP SHALL BE OUTLINED AS SHOWN, WITH A 1'-0" WIDE BORDER WITH 1/4" GROOVES APPROXIMATELY 3/4" ON CENTER. SEE TYPICAL RAMP DETAIL AND GROOVING DETAIL ON SHEET DB-C132.

Santa Clara Valley Transportation Authority

____NO EXCEPTIONS TAKEN (NET)
____MAKE CORRECTIONS NOTED (MCN)
____AMEND AND RESUBMIT (A/R)

Any action shown above is subject to the terms of the contract and does not relieve the Contractor of any of its obligations under the contract, including design and detailing.

Contract No.: DB11002F

By: _____ Date: _____

Not For Construction

REV	DATE	BY	SUB	APP	DESCRIPTION
0	20130710				READINESS FOR CONSTRUCTION

DESIGNED BY C. O'GARA
DRAWN BY C. O'GARA
CHECKED BY J. WU
IN CHARGE J. JI
DATE 20130710

REGISTERED PROFESSIONAL ENGINEER JUN JI No. C 72794 Exp. 06/30/14 CIVIL STATE OF CALIFORNIA

Skanska Shimmick Herzog
1436 California Circle
Milpitas, California 95035
A Joint Venture

KAL KRISHNAN CONSULTING SERVICES
300 LAKESIDE DRIVE, SUITE #220
OAKLAND, CA 94612

Lackwood, Andrews & Newnam, Inc. A LEO A DALY COMPANY
T·Y·LIN INTERNATIONAL

SUBMITTED _____
APPROVED _____

VTA BART SILICON VALLEY
BART SILICON VALLEY BERRYESSA EXTENSION

LINE, TRACK, STATIONS AND SYSTEMS
DESIGN UNIT 023
MILPITAS STATION
LAYOUT DETAILS

SHEET 1 OF 3

CADD FILENAME C700-S-DB-C130.dwg
SIZE D | SCALE 1"=5'
CONTRACT NO. C700 | REV. 0
AREA CODE DB | SHEET NO. C130 | PAGE NO. 0029

judy Jun 26, 2013 - 10:57am M:\OC PROJECTS\SVBX\5.0 Deliverables\5.2 Drawings\Milpitas Station\Civil\C700-S-DB-C130.dwg

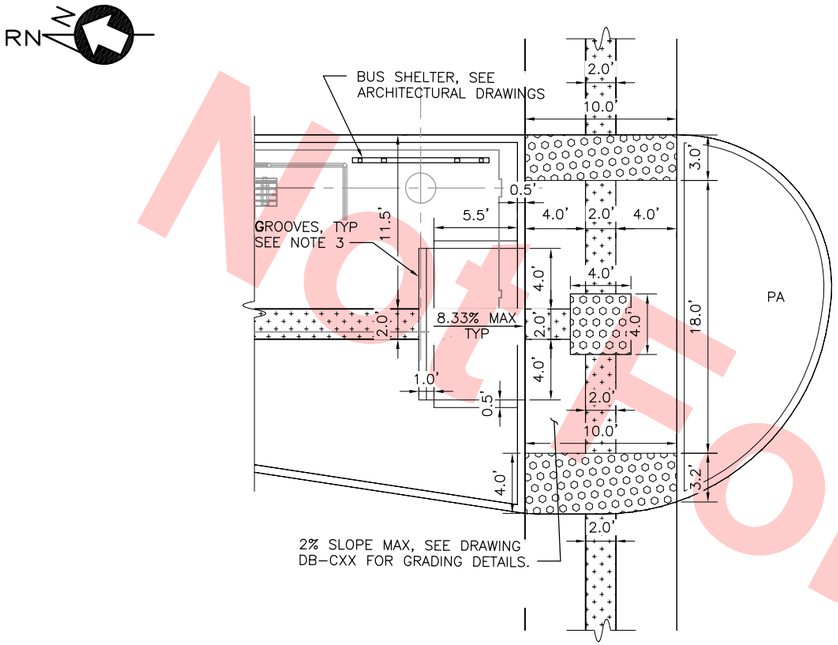

DETAIL 1
SCALE: 1"=5'
DB-C131
DB-C122

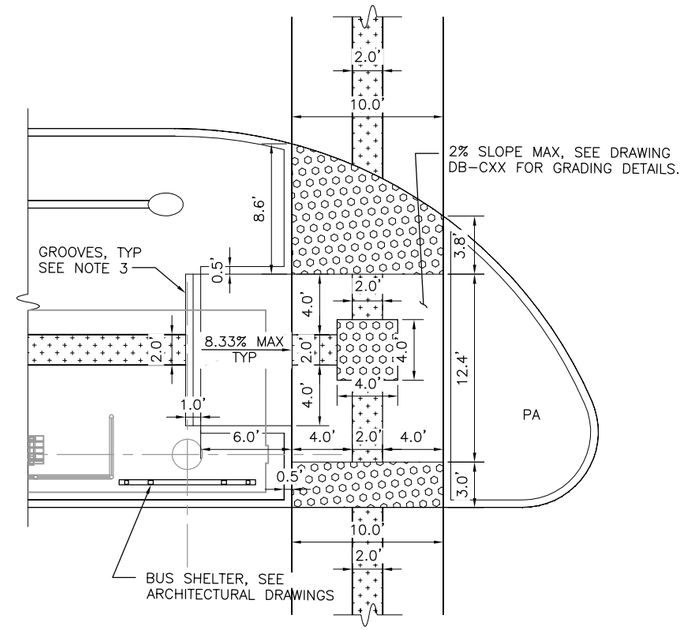

DETAIL 2
SCALE: 1"=5'
DB-C131
DB-C122

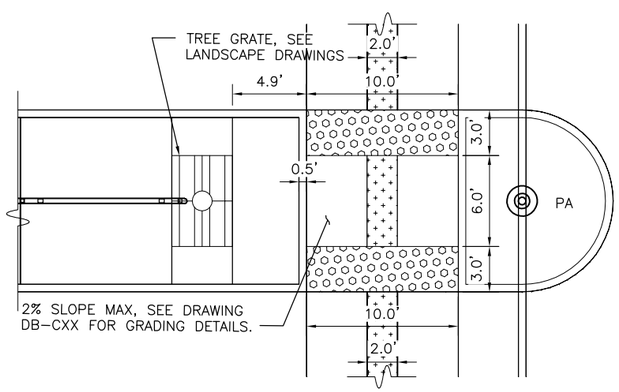

DETAIL 3
SCALE: 1"=5'
DB-C131
DB-C122

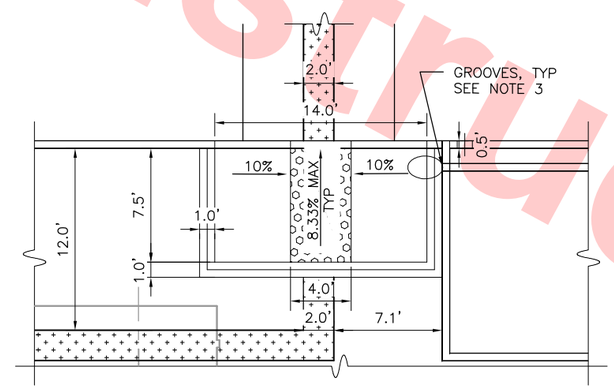

DETAIL 4
SCALE: 1"=5'
DB-C131
DB-C122

NOTES

1. SEE LANDSCAPE PLANS FOR TREE GRATE LOCATIONS.
2. SEE LANDSCAPE PLANS FOR HARDSCAPE FINISHES AND SCORING.
3. THE CURB RAMP SHALL BE OUTLINED AS SHOWN, WITH A 1'-0" WIDE BORDER WITH 1/4" GROOVES APPROXIMATELY 3/4" ON CENTER. SEE GROOVING DETAIL ON SHEET DB-C132.

Santa Clara Valley Transportation Authority

____NO EXCEPTIONS TAKEN (NET)
____MAKE CORRECTIONS NOTED (MCN)
____AMEND AND RESUBMIT (A/R)

Any action shown above is subject to the terms of the contract and does not relieve the Contractor of any of its obligations under the contract, including design and detailing.

Contract No.: DB11002F

By: _____ Date: _____

Not For Construction

REV	DATE	BY	SUB	APP	DESCRIPTION
0	20130710				READINESS FOR CONSTRUCTION

DESIGNED BY C. O'GARA
DRAWN BY C. O'GARA
CHECKED BY J. WU
IN CHARGE J. JI
DATE 20130710

REGISTERED PROFESSIONAL ENGINEER JUN JI No. C 72794 Exp. 06/30/14 CIVIL STATE OF CALIFORNIA

Skanska Shimmick Herzog
1436 California Circle
Milpitas, California 95035
A Joint Venture

KAL KRISHNAN CONSULTING SERVICES
300 LAKESIDE DRIVE, SUITE #220
OAKLAND, CA 94612
SUBMITTED

Lockwood, Andrews & Newnam, Inc. A LEO A DALY COMPANY
T·Y·LIN INTERNATIONAL
APPROVED

VTA BART SILICON VALLEY
BART SILICON VALLEY BERRYESSA EXTENSION

LINE, TRACK, STATIONS AND SYSTEMS
DESIGN UNIT 023
MILPITAS STATION
LAYOUT DETAILS

SHEET 2 OF 3

CADD FILENAME C700-S-DB-C131.dwg
SIZE D | SCALE 1"=5'
CONTRACT NO. C700 | REV. 0
AREA CODE DB | SHEET NO. C131 | PAGE NO. 0030

judy Jun 26, 2013 - 11:02am M:\CC PROJECTS\SVBX\5.0 Deliverables\5.2 Drawings\Milpitas Station\Civil\C700-S-DB-C131.dwg

Not For Construction

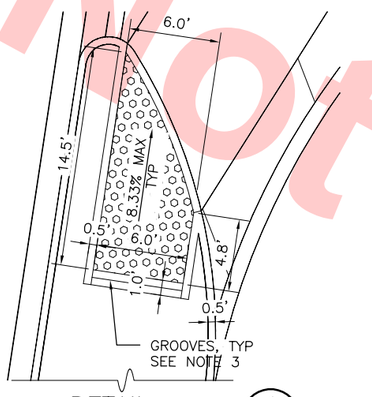

DETAIL 1 (DB-C132)
SCALE: 1"=5'
DB-C122

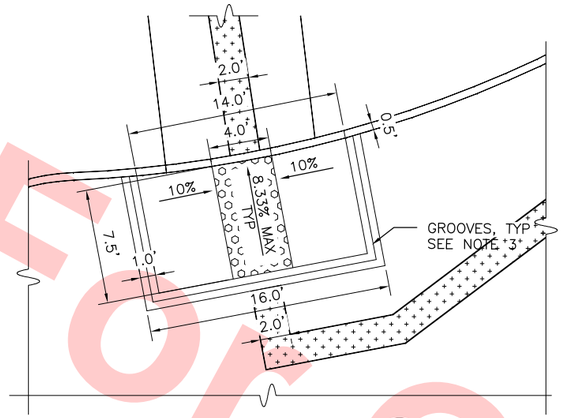

DETAIL 2 (DB-C132)
SCALE: 1"=5'
DB-C123

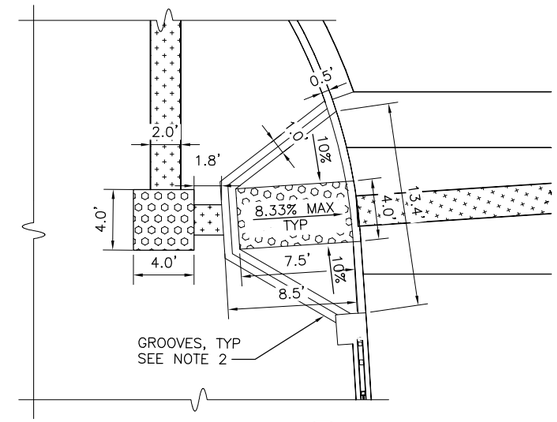

DETAIL 3 (DB-C132)
SCALE: 1"=5'
DB-C123

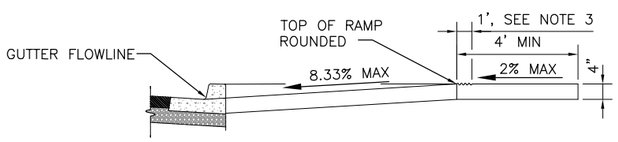

CURB RAMP DETAIL, TYP (A)
SCALE: 1"=2'-6"
DB-C132
DB-C130

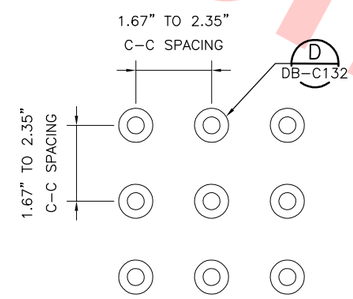

RAISED TRUNCATED DOME PATTERN DETAIL (C)
SCALE: 1"=2'
DB-C132

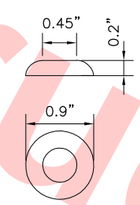

RAISED TRUNCATED DOME DETAIL (D)
SCALE: 1"=1'
DB-C132

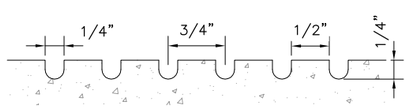

GROOVING DETAIL (B)
SCALE: 1"=1'
DB-C132

NOTES

1. SEE LANDSCAPE PLANS FOR TREE GRATE LOCATIONS.
2. SEE LANDSCAPE PLANS FOR HARDSCAPE FINISHES AND SCORING.
3. THE CURB RAMP SHALL BE OUTLINED AS SHOWN, WITH A 1'-0" WIDE BORDER WITH 1/4" GROOVES APPROXIMATELY 3/4" ON CENTER. SEE GROOVING DETAIL B ON SHEET DB-C132. (B / DB-C132)
4. TRANSITIONS FROM RAMPS AND LANDING TO WALKS, GUTTERS OR STREETS SHALL BE FLUSH AND FREE OF ABRUBT CHANGES.
5. MAXIMUM SLOPES OF ADJOINING GUTTERS, THE ROAD SURFACE IMMEDIATELY ADJACENT TO THE CURB RAMP OR ACCESSIBLE ROUTE SHALL NOT EXCEED 5 PERCENT WITHIN 4'-0" OF THE TOP AND BOTTOM OF THE CURB RAMP.
6. CURB RAMPS SHALL HAVE A DETECTABLE WARNING SURFACE THAT EXTENDS THE FULL WIDTH AND FULL DEPTH, EXCLUDING FLARES OF THE RAMP. DETECTABLE WARNING SURFACES SHALL CONFORM TO THE DETAILS ON THIS PLAN AND THE REQUIREMENTS IN THE SPECIAL PROVISIONS. ADDITIONALLY, TRUNCATED DOMES SHALL BE COST IN TACT OR EQUAL, COLOR TO BE CONTRASTING TO SIDEWALK CONCRETE AND YELLOW FOR DESIGNATED SCHOOL ROUTE CROSSINGS, SUBJECT TO THE REVIEW AND APPROVAL OF THE CITY ENGINEER, IN ALL SCHOOL COLOR SHALL BE YELLOW.
7. THE EDGE OF THE DETECTABLE WARNING SURFACE NEAREST THE STREET SHALL BE BETWEEN 6" AND 8" FROM THE GUTTER FLOWLINE.
8. THE SURFACE OF CURB RAMPS AND ITS FLARED SIDES SHALL BE OF CONTRASTING FINISH FROM THAT OF ADJACENT SIDEWALK.
9. GLUE-ON OR BOLT DOWN TACTILE WARNING PLATES SHALL NOT BE USED.

Santa Clara Valley Transportation Authority

____NO EXCEPTIONS TAKEN (NET)
____MAKE CORRECTIONS NOTED (MCN)
____AMEND AND RESUBMIT (A/R)

Any action shown above is subject to the terms of the contract and does not relieve the Contractor of any of its obligations under the contract, including design and detailing.

Contract No.: DB11002F

By: _____ **Date:** _____

REV	DATE	BY	SUB	APP	DESCRIPTION
0	20130710				READINESS FOR CONSTRUCTION

DESIGNED BY C. O'GARA
DRAWN BY C. O'GARA
CHECKED BY J. WU
IN CHARGE J. JI
DATE 20130710

REGISTERED PROFESSIONAL ENGINEER — JUN JI — No. C 72794 — Exp. 06/30/14 — CIVIL — STATE OF CALIFORNIA

Skanska Shimmick Herzog — 1436 California Circle, Milpitas, California 95035 — A Joint Venture

KAL KRISHNAN CONSULTING SERVICES — 300 LAKESIDE DRIVE, SUITE #220, OAKLAND, CA 94612 — SUBMITTED

Lockwood, Andrews & Newnam, Inc. — A LEO A DALY COMPANY — T·Y·LIN INTERNATIONAL — APPROVED

VTA BART SILICON VALLEY
BART SILICON VALLEY BERRYESSA EXTENSION

LINE, TRACK, STATIONS AND SYSTEMS DESIGN UNIT 023
MILPITAS STATION
LAYOUT DETAILS
SHEET 3 OF 3

CADD FILENAME C700-S-DB-C132.dwg
SIZE D | SCALE 1"=5'
CONTRACT NO. C700 | REV. 0
AREA CODE DB | SHEET NO. C132 | PAGE NO. 0031

judy Jun 26, 2013 - 11:03am M:\OC PROJECTS\SVBX\5.0 Deliverables\5.2 Drawings\Milpitas Station\Civil\C700-S-DB-C132.dwg

NOTES

1. FOR KEY NOTES, LEGEND AND ABBREVIATIONS SEE C002.
2. STORM DRAIN SERVICE STUBS SHALL BE CONNECTED TO RELOCATED STORM DRAIN MAIN SHOWN UNDER CONTRACT XXX.
3. ALL PLANTER AREA WITH SUBSURFACE DRAINAGE SHALL BE CONNECTED TO SITE STORM DRAIN SYSTEM AS SHOWN.

Santa Clara Valley Transportation Authority

____NO EXCEPTIONS TAKEN (NET)
____MAKE CORRECTIONS NOTED (MCN)
____AMEND AND RESUBMIT (A/R)

Any action shown above is subject to the terms of the contract and does not relieve the Contractor of any of its obligations under the contract, including design and detailing.

Contract No.: DB11002F

By: _____ Date: _____

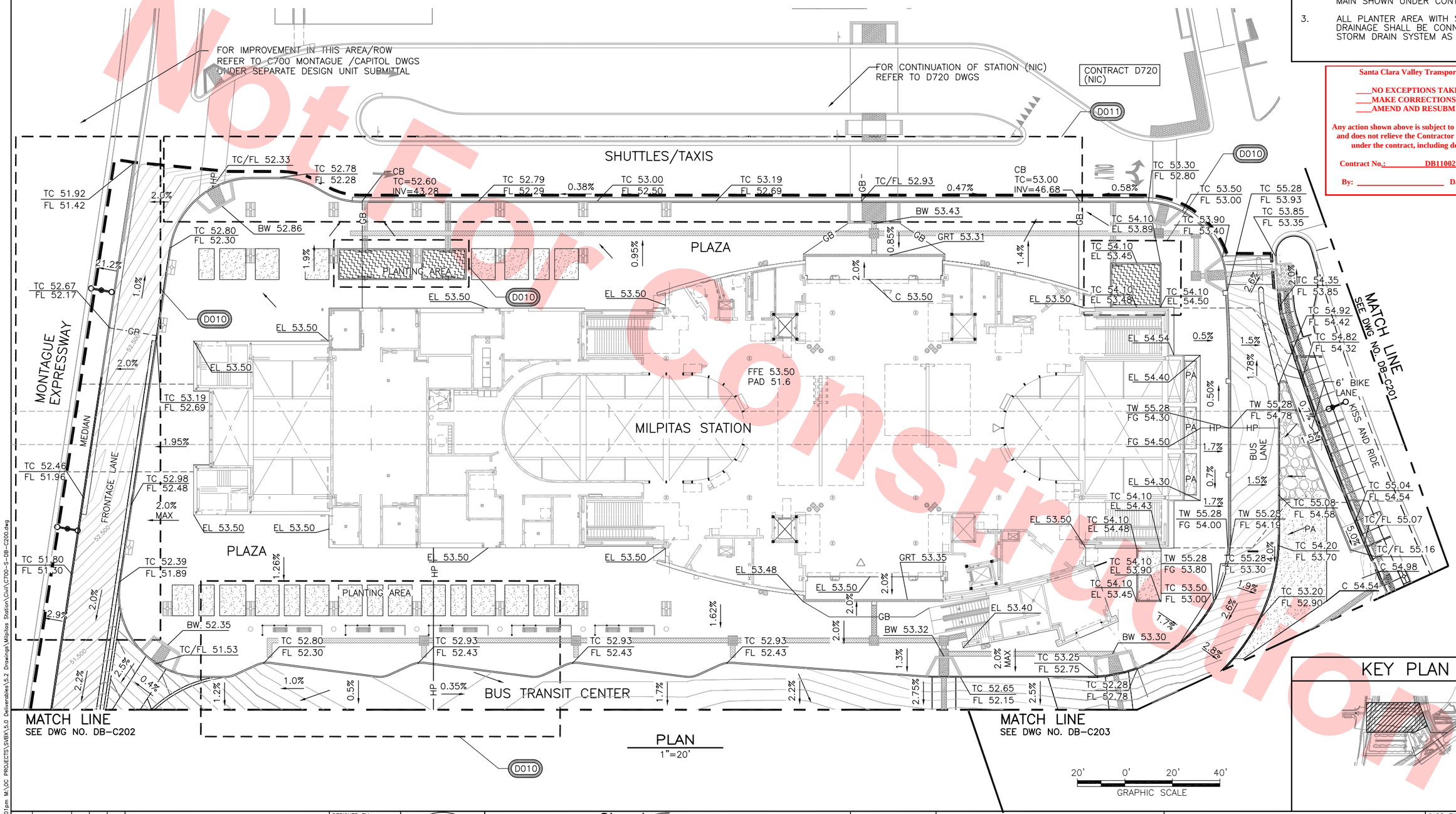

PLAN
1"=20'

KEY PLAN

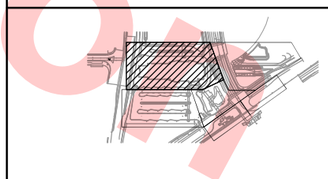

Not For Construction

REV	DATE	BY	SUB	APP	DESCRIPTION
0	20130710				READINESS FOR CONSTRUCTION

DESIGNED BY J. WU
DRAWN BY J. WU
CHECKED BY J. JI
IN CHARGE J. JI
DATE 20130710

REGISTERED PROFESSIONAL ENGINEER JUN JI No. C 72794 Exp. 06/30/14 CIVIL STATE OF CALIFORNIA

Skanska Shimmick Herzog
1436 California Circle Milpitas, California 95035
A Joint Venture

KAL KRISHNAN CONSULTING SERVICES
300 LAKESIDE DRIVE, SUITE #220 OAKLAND, CA 94612

SUBMITTED

Lockwood, Andrews & Newnam, Inc. A LEO A DALY COMPANY
T·Y·LIN INTERNATIONAL

APPROVED

VTA BART SILICON VALLEY
BART SILICON VALLEY BERRYESSA EXTENSION

LINE, TRACK, STATIONS AND SYSTEMS
DESIGN UNIT 023
MILPITAS STATION
GRADING PLAN

SHEET 1 OF 4

CADD FILENAME C700-S-DB-C200.dwg
SIZE D | SCALE 1"=20'
CONTRACT NO. C700 | REV. 0
AREA CODE DB | SHEET NO. C200 | PAGE NO. 0032

Jun 26, 2013 – 1:01pm M:\OC PROJECTS\SVBX\5.0 Deliverables\5.2 Drawings\Milpitas Station\Civil\C700-S-DB-C200.dwg
judy

KEY NOTES

1. FOR KEY NOTES, LEGEND AND ABBREVIATIONS SEE C002.
2. STORM DRAIN SERVICE STUBS SHALL BE CONNECTED TO RELOCATED STORM DRAIN MAIN SHOWN UNDER CONTRACT XXX.
3. ALL PLANTER AREA WITH SUBSURFACE DRAINAGE SHALL BE CONNECTED TO SITE STORM DRAIN SYSTEM AS SHOWN.

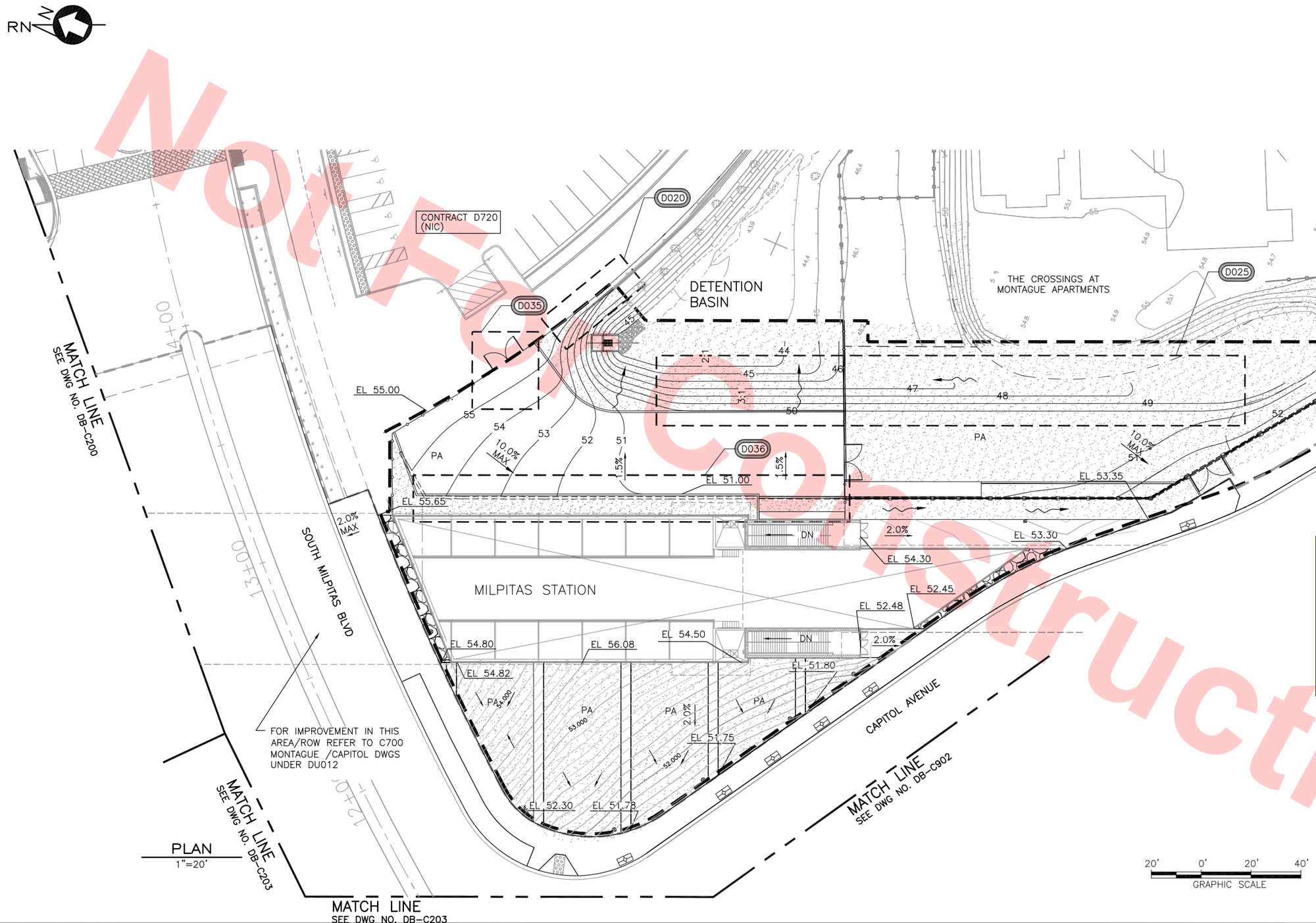

Santa Clara Valley Transportation Authority

____NO EXCEPTIONS TAKEN (NET)
____MAKE CORRECTIONS NOTED (MCN)
____AMEND AND RESUBMIT (A/R)

Any action shown above is subject to the terms of the contract and does not relieve the Contractor of any of its obligations under the contract, including design and detailing.

Contract No.: DB11002F

By: _____ **Date:** _____

KEY PLAN

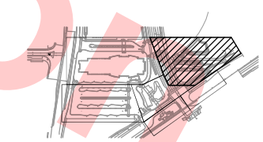

Not For Construction

REV	DATE	BY	SUB	APP	DESCRIPTION
0	20130710				READINESS FOR CONSTRUCTION

DESIGNED BY J. WU
DRAWN BY J. WU
CHECKED BY J. JI
IN CHARGE J. JI
DATE 20130710

REGISTERED PROFESSIONAL ENGINEER JUN JI No. C 72794 Exp. 06/30/14 CIVIL STATE OF CALIFORNIA

Skanska Shimmick Herzog
1436 California Circle Milpitas, California 95035
A Joint Venture

KAL KRISHNAN CONSULTING SERVICES
300 LAKESIDE DRIVE, SUITE #220 OAKLAND, CA 94612

SUBMITTED _____

Lockwood, Andrews & Newnam, Inc. A CH2M HILL COMPANY | T·Y·LIN INTERNATIONAL

APPROVED _____

NOT FOR CONSTRUCTION

VTA BART SILICON VALLEY
BART SILICON VALLEY BERRYESSA EXTENSION

LINE, TRACK, STATIONS AND SYSTEMS
DESIGN UNIT 023
MILPITAS STATION
GRADING PLAN

SHEET 2 OF 4

CADD FILENAME C700-S-DB-C201.dwg
SIZE D | SCALE 1"=20'
CONTRACT NO. C700 | REV. 0
AREA CODE DB | SHEET NO. C201 | PAGE NO. 0033

Jun 26, 2013 – 12:19pm M:\DC PROJECTS\SVBX\5.0 Deliverables\5.2 Drawings\Milpitas Station\Civil\C700-S-DB-C201.dwg
judy

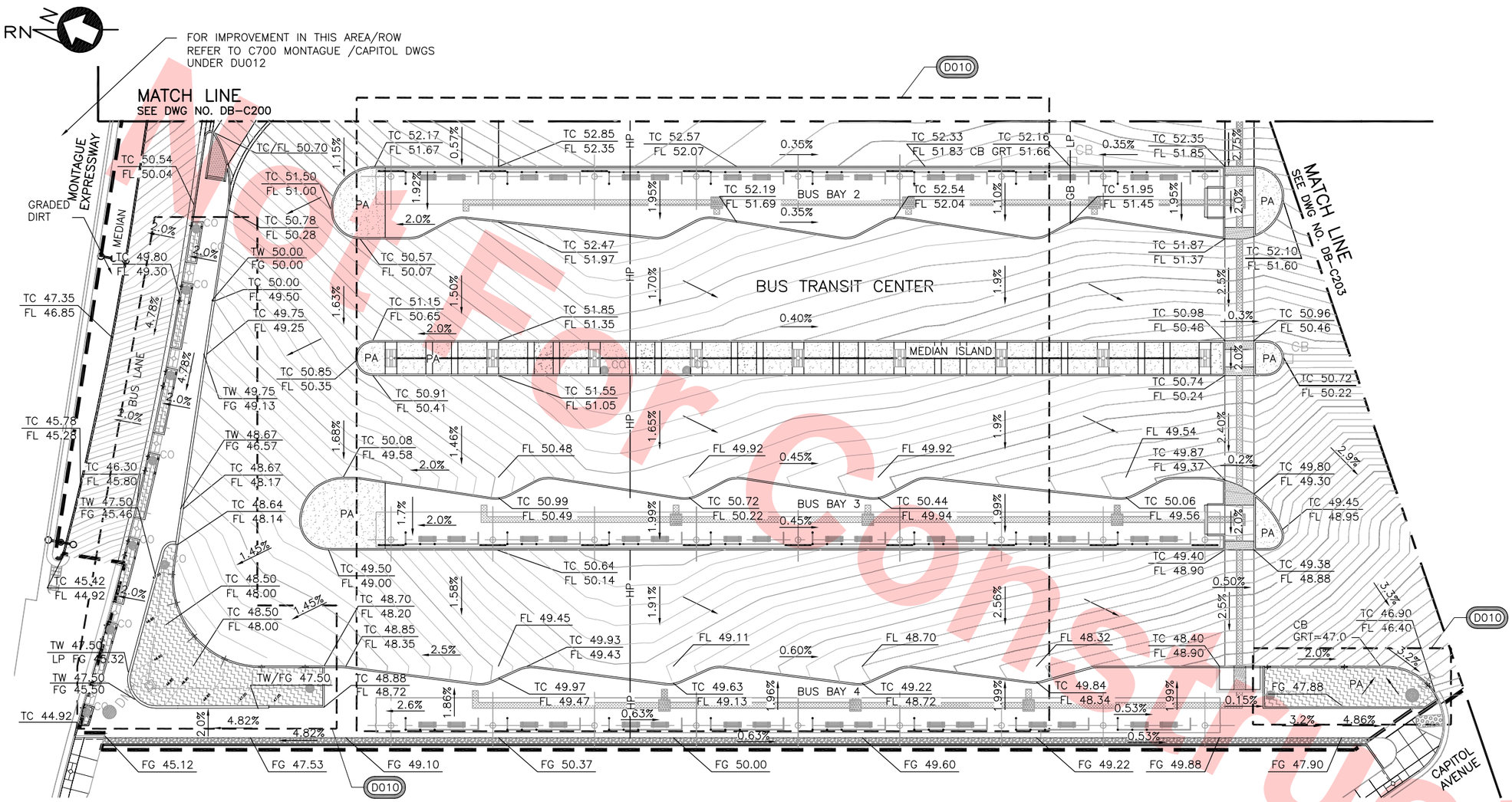

PLAN
1"=20'

NOTES

1. FOR KEY NOTES, LEGEND AND ABBREVIATIONS SEE C002.
2. STORM DRAIN SERVICE STUBS SHALL BE CONNECTED TO RELOCATED STORM DRAIN MAIN SHOWN UNDER CONTRACT XXX.
3. ALL PLANTER AREA WITH SUBSURFACE DRAINAGE SHALL BE CONNECTED TO SITE STORM DRAIN SYSTEM AS SHOWN.

Santa Clara Valley Transportation Authority

____NO EXCEPTIONS TAKEN (NET)
____MAKE CORRECTIONS NOTED (MCN)
____AMEND AND RESUBMIT (A/R)

Any action shown above is subject to the terms of the contract and does not relieve the Contractor of any of its obligations under the contract, including design and detailing.

Contract No.: DB11002F

By: _____ **Date:** _____

KEY PLAN

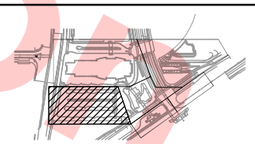

REV	DATE	BY	SUB	APP	DESCRIPTION
0	20130710				READINESS FOR CONSTRUCTION

DESIGNED BY J. WU
DRAWN BY J. WU
CHECKED BY J. JI
IN CHARGE J. JI
DATE 20130710

REGISTERED PROFESSIONAL ENGINEER JUN JI No. C 72794 Exp. 06/30/14 CIVIL STATE OF CALIFORNIA

Skanska Shimmick Herzog
1436 California Circle
Milpitas, California 95035
A Joint Venture

KAL KRISHNAN CONSULTING SERVICES
300 LAKESIDE DRIVE, SUITE #220
OAKLAND, CA 94612
SUBMITTED

Lockwood, Andrews & Newnam, Inc. A CH2M HILL COMPANY
T·Y·LIN INTERNATIONAL
APPROVED

VTA BART SILICON VALLEY
BART SILICON VALLEY BERRYESSA EXTENSION

LINE, TRACK, STATIONS AND SYSTEMS
DESIGN UNIT 023
MILPITAS STATION
GRADING PLAN
SHEET 3 OF 4

CADD FILENAME C700-S-DB-C202.dwg
SIZE D | SCALE 1"=20'
CONTRACT NO. C700 | REV. 0
AREA CODE DB | SHEET NO. C202 | PAGE NO. 0034

Jun 26, 2013 - 12:53pm M:\DC PROJECTS\SVBX\5.0 Deliverables\5.2 Drawings\Milpitas Station\Civil\C700-S-DB-C202.dwg
jiudy

Not for Construction

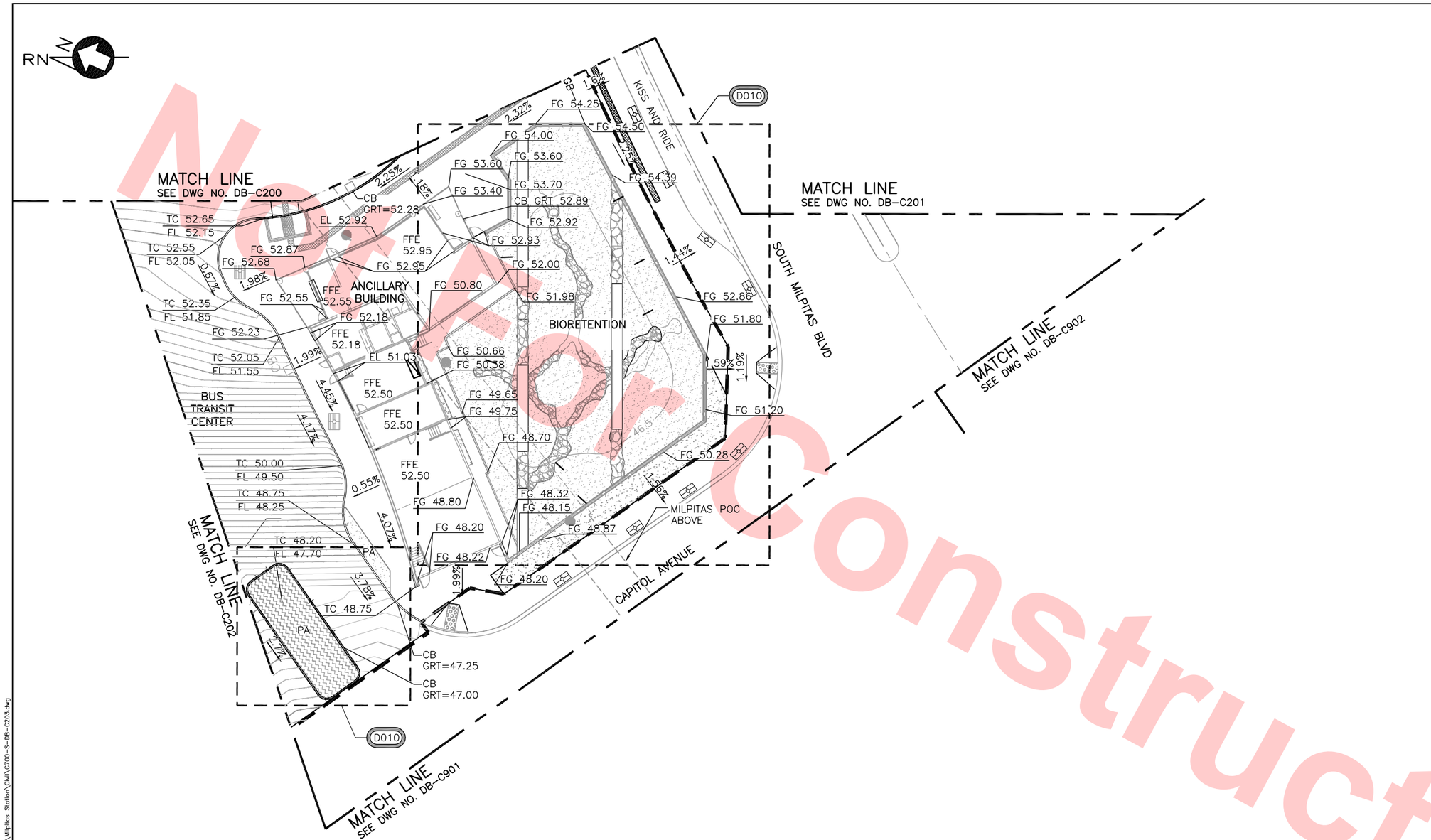

PLAN
1"=20'

20' 0' 20' 40'
GRAPHIC SCALE

NOTES

1. FOR KEY NOTES, LEGEND AND ABBREVIATIONS SEE C002.
2. STORM DRAIN SERVICE STUBS SHALL BE CONNECTED TO RELOCATED STORM DRAIN MAIN SHOWN UNDER CONTRACT XXX.
3. ALL PLANTER AREA WITH SUBSURFACE DRAINAGE SHALL BE CONNECTED TO SITE STORM DRAIN SYSTEM AS SHOWN.

Santa Clara Valley Transportation Authority

____NO EXCEPTIONS TAKEN (NET)
____MAKE CORRECTIONS NOTED (MCN)
____AMEND AND RESUBMIT (A/R)

Any action shown above is subject to the terms of the contract and does not relieve the Contractor of any of its obligations under the contract, including design and detailing.

Contract No.: DB11002F

By: _____ Date: _____

KEY PLAN

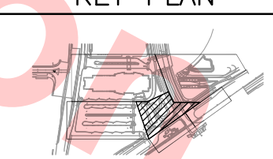

Not For Construction

REV	DATE	BY	SUB	APP	DESCRIPTION
0	20130710				READINESS FOR CONSTRUCTION

DESIGNED BY J. WU
DRAWN BY J. WU
CHECKED BY J. JI
IN CHARGE J. JI
DATE 20130710

REGISTERED PROFESSIONAL ENGINEER JUN JI No. C 72794 Exp. 06/30/14 CIVIL STATE OF CALIFORNIA

Skanska Shimmick Herzog
1436 California Circle
Milpitas, California 95035
A Joint Venture

KAL KRISHNAN CONSULTING SERVICES
300 LAKESIDE DRIVE, SUITE #220
OAKLAND, CA 94612
SUBMITTED

Lockwood, Andrews & Newnam, Inc. A LEO A DALY COMPANY
T-Y-LIN INTERNATIONAL
APPROVED

VTA BART SILICON VALLEY
BART SILICON VALLEY BERRYESSA EXTENSION

LINE, TRACK, STATIONS AND SYSTEMS
DESIGN UNIT 023
MILPITAS STATION
GRADING PLAN

SHEET 4 OF 4

CADD FILENAME C700-S-DB-C203.dwg
SIZE D | SCALE 1"=20'
CONTRACT NO. C700 | REV. 0
AREA CODE DB | SHEET NO. C203 | PAGE NO. 0035

judy Jun 27, 2013 - 8:50am M:\OC PROJECTS\SVBX\5.0 Deliverables\5.2 Drawings\Milpitas Station\Civil\C700-S-DB-C203.dwg

KEY NOTES

1. FOR KEY NOTES, LEGEND AND ABBREVIATIONS SEE C002.
2. FOR UTILITY RELOCATIONS SEE UTILITY DWGS UNDER DU012.
3. FOR DRAINAGE AT EAST SIDE OF STATION, AND OTHER UTILITIES, SEE UTILITY COMPOSITE PLAN FOR DETAILS.
4. FOR STORM DRAIN AND STUBS FROM BUILDINGS MECHANICAL DWGS.
5. ALL PLANTING AREA WITH SUBSURFACE DRAINAGE SHALL BE CONNECTED TO SITE STORM DRAIN SYSTEM AS SHOWN, SEE DETAILS ON DB-C222.
6. UNDERDRAIN UNDER TREE GRATES SHALL BE CONNECTED TO SITE DRAINAGE SYSTEM AS SHOWN.

Santa Clara Valley Transportation Authority

____NO EXCEPTIONS TAKEN (NET)
____MAKE CORRECTIONS NOTED (MCN)
____AMEND AND RESUBMIT (A/R)

Any action shown above is subject to the terms of the contract and does not relieve the Contractor of any of its obligations under the contract, including design and detailing.

Contract No.: DB11002F

By: _____ Date: _____

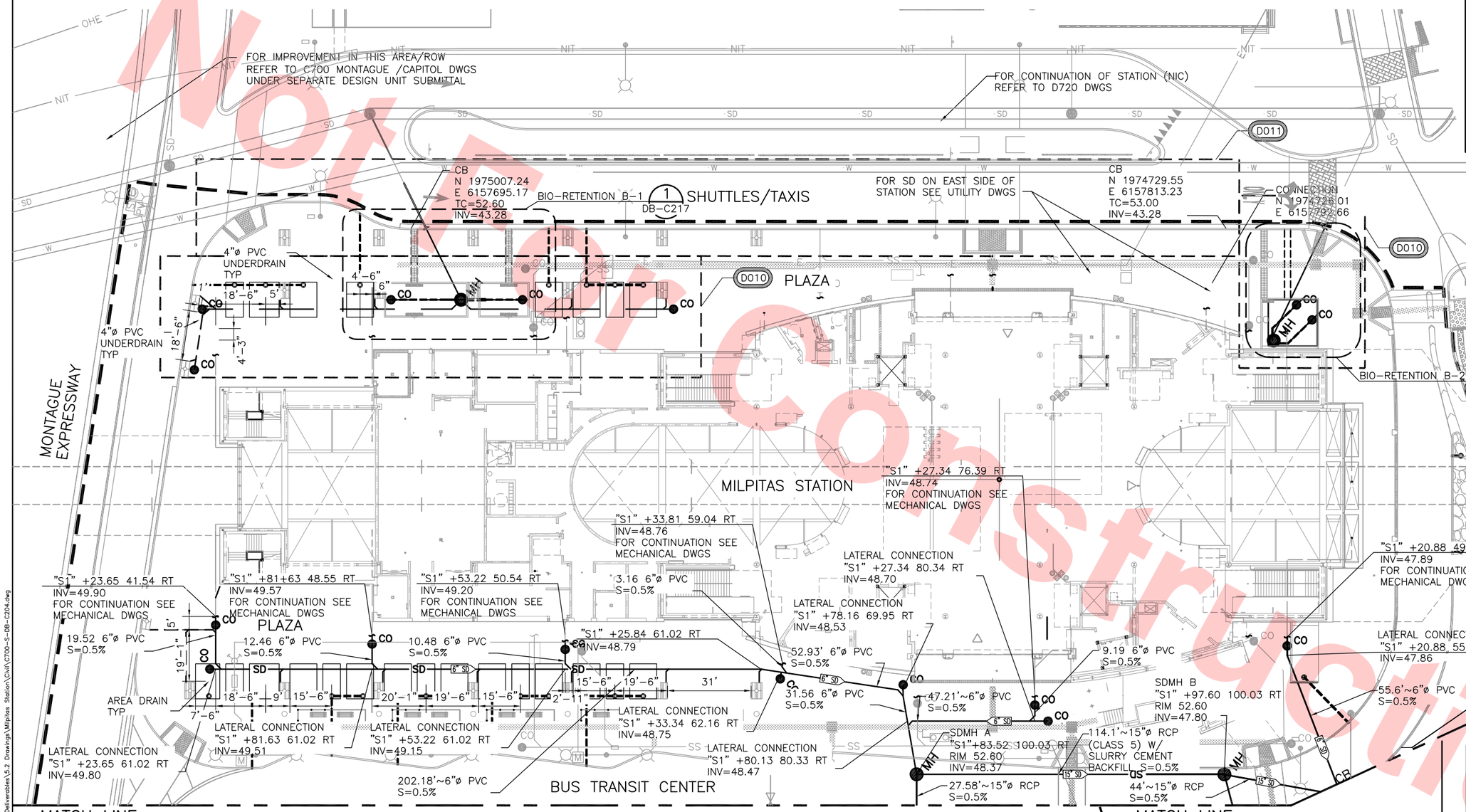

PLAN
1"=20'

KEY PLAN

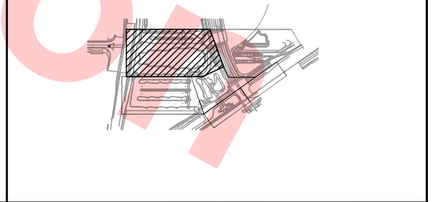

Not For Construction

REV	DATE	BY	SUB	APP	DESCRIPTION
0	20130710				READINESS FOR CONSTRUCTION

DESIGNED BY J. WU
DRAWN BY J. WU
CHECKED BY J. JI
IN CHARGE J. JI
DATE 20130710

REGISTERED PROFESSIONAL ENGINEER JUN JI No. C 72794 Exp. 06/30/14 CIVIL STATE OF CALIFORNIA

Skanska Shimmick Herzog
1436 California Circle
Milpitas, California 95035
A Joint Venture

KAL KRISHNAN CONSULTING SERVICES
300 LAKESIDE DRIVE, SUITE #220
OAKLAND, CA 94612
SUBMITTED

Lockwood, Andrews & Newnam, Inc. A LEO A DALY COMPANY
T·Y·LIN INTERNATIONAL
APPROVED

VTA BART SILICON VALLEY
BART SILICON VALLEY BERRYESSA EXTENSION

LINE, TRACK, STATIONS AND SYSTEMS
DESIGN UNIT 023
MILPITAS STATION
DRAINAGE PLAN

SHEET 1 OF 4

CADD FILENAME C700-S-DB-C204.dwg
SIZE D | SCALE 1"=20'
CONTRACT NO. C700 | REV. 0
AREA CODE DB | SHEET NO. C204 | PAGE NO. 0036

Jun 26, 2013 – 5:46pm M:\OC PROJECTS\SVBX\5.0 Deliverables\5.2 Drawings\Milpitas Station\Civil\C700-S-DB-C204.dwg
judy

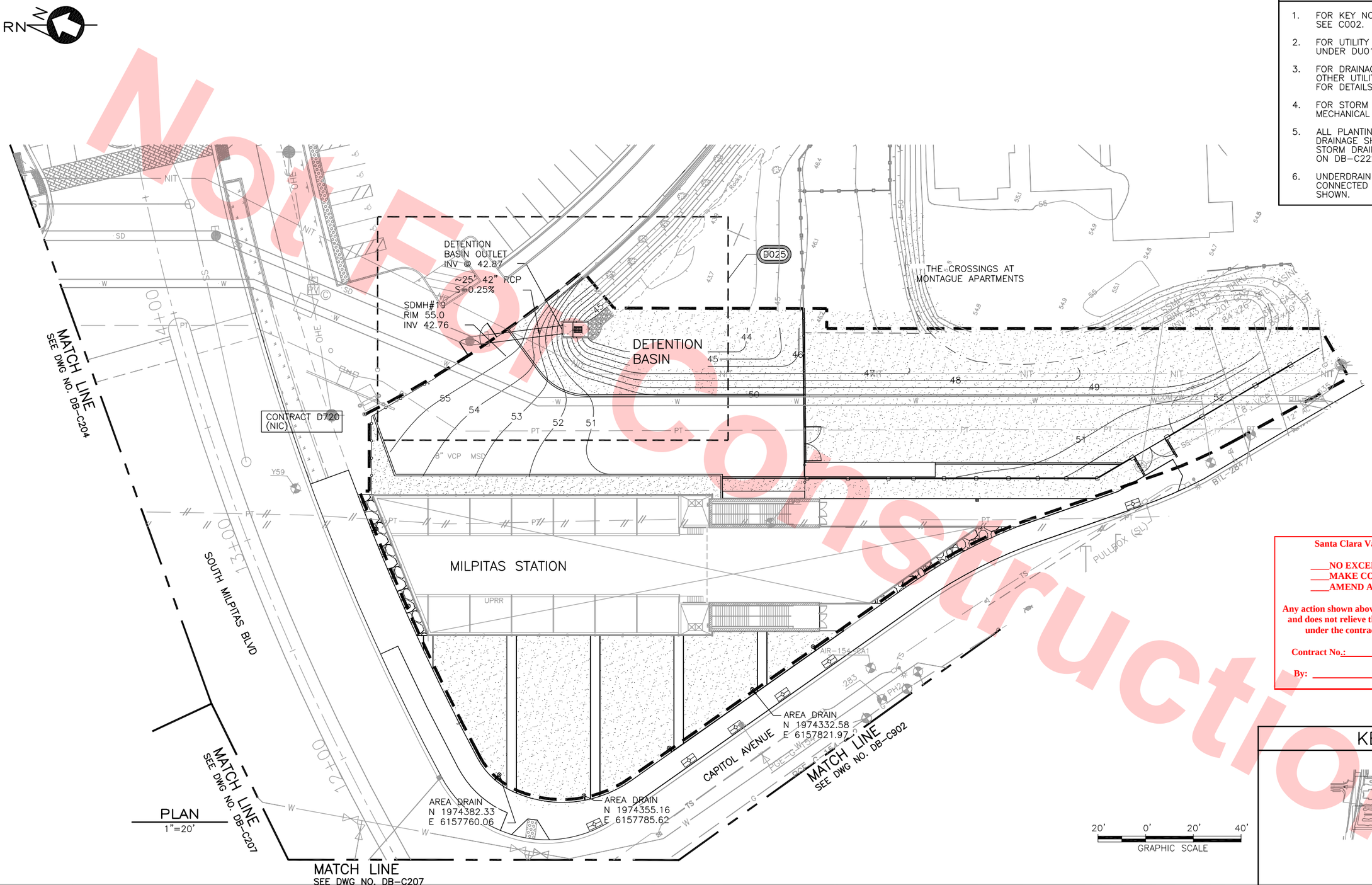

KEY NOTES

1. FOR KEY NOTES, LEGEND AND ABBREVIATIONS SEE C002.
2. FOR UTILITY RELOCATIONS SEE UTILITY DWGS UNDER DU012.
3. FOR DRAINAGE AT EAST SIDE OF STATION, AND OTHER UTILITIES, SEE UTILITY COMPOSITE PLAN FOR DETAILS.
4. FOR STORM DRAIN AND STUBS FROM BUILDINGS MECHANICAL DWGS.
5. ALL PLANTING AREA WITH SUBSURFACE DRAINAGE SHALL BE CONNECTED TO SITE STORM DRAIN SYSTEM AS SHOWN, SEE DETAILS ON DB-C222.
6. UNDERDRAIN UNDER TREE GRATES SHALL BE CONNECTED TO SITE DRAINAGE SYSTEM AS SHOWN.

Santa Clara Valley Transportation Authority

____NO EXCEPTIONS TAKEN (NET)
____MAKE CORRECTIONS NOTED (MCN)
____AMEND AND RESUBMIT (A/R)

Any action shown above is subject to the terms of the contract and does not relieve the Contractor of any of its obligations under the contract, including design and detailing.

Contract No.: DB11002F

By: _____ **Date:** _____

KEY PLAN

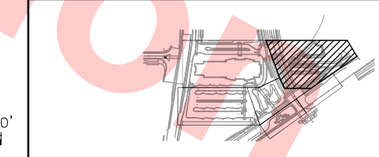

Not For Construction

REV	DATE	BY	SUB	APP	DESCRIPTION
0	20130710				READINESS FOR CONSTRUCTION

DESIGNED BY J. WU
DRAWN BY J. WU
CHECKED BY J. JI
IN CHARGE J. JI
DATE 20130710

REGISTERED PROFESSIONAL ENGINEER JUN JI No. C 72794 Exp. 06/30/14 CIVIL STATE OF CALIFORNIA

Skanska Shimmick Herzog
1436 California Circle Milpitas, California 95035
A Joint Venture

KAL KRISHNAN CONSULTING SERVICES
300 LAKESIDE DRIVE, SUITE #220 OAKLAND, CA 94612
SUBMITTED _____

Lockwood, Andrews & Newnam, Inc. A CH2M HILL COMPANY
T·Y·LIN INTERNATIONAL
APPROVED _____

NOT FOR CONSTRUCTION

VTA BART SILICON VALLEY
BART SILICON VALLEY BERRYESSA EXTENSION

LINE, TRACK, STATIONS AND SYSTEMS
DESIGN UNIT 023
MILPITAS STATION
DRAINAGE PLAN

SHEET 2 OF 4

CADD FILENAME C700-S-DB-C205.dwg
SIZE D | SCALE 1"=20'
CONTRACT NO. C700 | REV. 0
AREA CODE DB | SHEET NO. C205 | PAGE NO. 0037

Jun 26, 2013 – 5:51pm M:\QC PROJECTS\SVBX\5.0 Deliverables\5.2 Drawings\Milpitas Station\Civil\C700-S-DB-C205.dwg
Judy

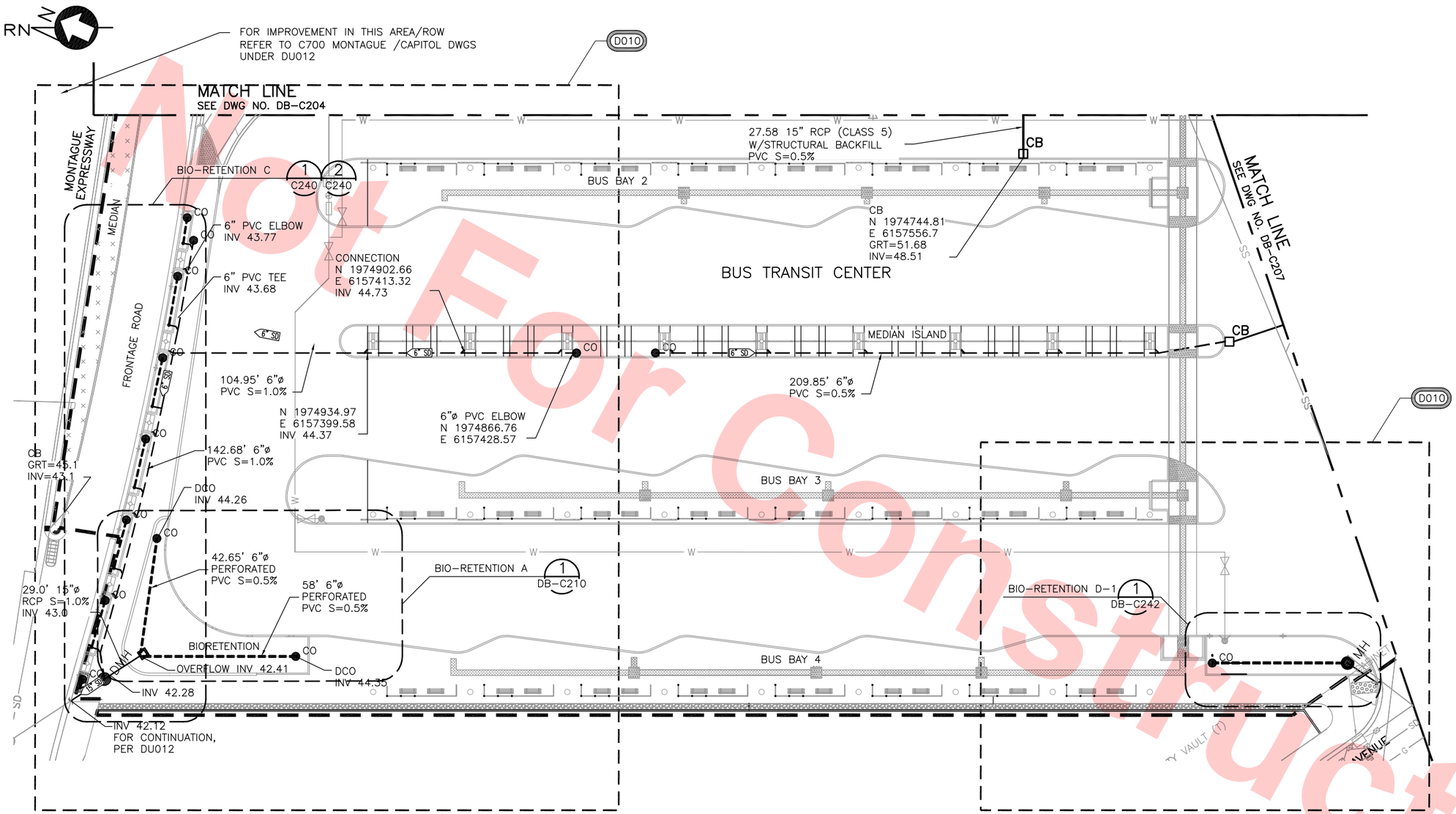

PLAN
1"=20'

KEY NOTES

1. FOR KEY NOTES, LEGEND AND ABBREVIATIONS SEE C002.
2. FOR UTILITY RELOCATIONS SEE UTILITY DWGS UNDER DU012.
3. FOR DRAINAGE AT EAST SIDE OF STATION, AND OTHER UTILITIES, SEE UTILITY COMPOSITE PLAN FOR DETAILS.
4. FOR STORM DRAIN AND STUBS FROM BUILDINGS MECHANICAL DWGS.
5. ALL PLANTING AREA WITH SUBSURFACE DRAINAGE SHALL BE CONNECTED TO SITE STORM DRAIN SYSTEM AS SHOWN, SEE DETAILS ON DB-C222.
6. UNDERDRAIN UNDER TREE GRATES SHALL BE CONNECTED TO SITE DRAINAGE SYSTEM AS SHOWN.

Santa Clara Valley Transportation Authority

____NO EXCEPTIONS TAKEN (NET)
____MAKE CORRECTIONS NOTED (MCN)
____AMEND AND RESUBMIT (A/R)

Any action shown above is subject to the terms of the contract and does not relieve the Contractor of any of its obligations under the contract, including design and detailing.

Contract No.: DB11002F

By: _____ **Date:** _____

KEY PLAN

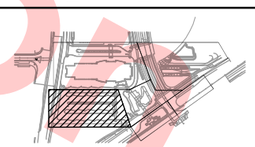

20' 0' 20' 40'
GRAPHIC SCALE

Not For Construction

REV	DATE	BY	SUB	APP	DESCRIPTION
0	20130710				READINESS FOR CONSTRUCTION

DESIGNED BY J. WU
DRAWN BY J. WU
CHECKED BY J. JI
IN CHARGE J. JI
DATE 20130710

REGISTERED PROFESSIONAL ENGINEER JUN JI No. C 72794 Exp. 06/30/14 CIVIL STATE OF CALIFORNIA

Skanska Shimmick Herzog
1436 California Circle
Milpitas, California 95035
A Joint Venture

KAL KRISHNAN CONSULTING SERVICES
300 LAKESIDE DRIVE, SUITE #220
OAKLAND, CA 94612
SUBMITTED

Lockwood, Andrews & Newnam, Inc. A CH2M HILL COMPANY
T·Y·LIN INTERNATIONAL
APPROVED

VTA BART SILICON VALLEY
BART SILICON VALLEY BERRYESSA EXTENSION

LINE, TRACK, STATIONS AND SYSTEMS
DESIGN UNIT 023
MILPITAS STATION
DRAINAGE PLAN

SHEET 3 OF 4

CADD FILENAME C700-S-DB-C206.dwg
SIZE D | SCALE 1"=20'
CONTRACT NO. C700 | REV. 0
AREA CODE DB | SHEET NO. C206 | PAGE NO. 0038

Jun 26, 2013 - 6:05pm M:\CC PROJECTS\SVBX\5.0 Deliverables\5.2 Drawings\Milpitas Station\Civil\C700-S-DB-C206.dwg
judy

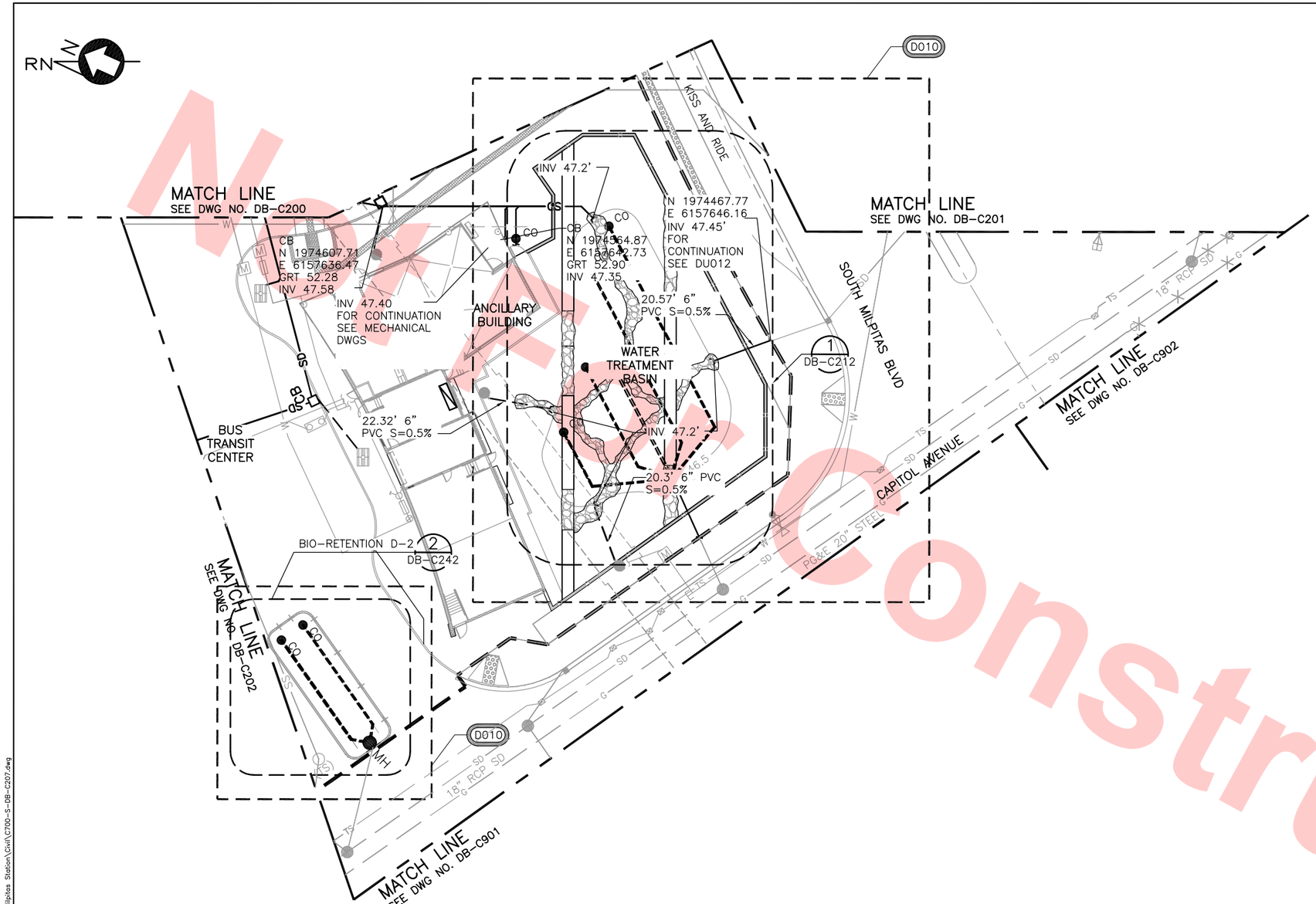

PLAN
1"=20'

20' 0' 20' 40'
GRAPHIC SCALE

NOTES

1. FOR KEY NOTES, LEGEND AND ABBREVIATIONS SEE C002.
2. FOR UTILITY RELOCATIONS SEE UTILITY DWGS UNDER DU012.
3. FOR DRAINAGE AT EAST SIDE OF STATION, AND OTHER UTILITIES, SEE UTILITY COMPOSITE PLAN FOR DETAILS.
4. FOR STORM DRAIN AND STUBS FROM BUILDINGS MECHANICAL DWGS.
5. ALL PLANTING AREA WITH SUBSURFACE DRAINAGE SHALL BE CONNECTED TO SITE STORM DRAIN SYSTEM AS SHOWN, SEE DETAILS ON DB-C222.
6. UNDERDRAIN UNDER TREE GRATES SHALL BE CONNECTED TO SITE DRAINAGE SYSTEM AS SHOWN.

Santa Clara Valley Transportation Authority

____NO EXCEPTIONS TAKEN (NET)
____MAKE CORRECTIONS NOTED (MCN)
____AMEND AND RESUBMIT (A/R)

Any action shown above is subject to the terms of the contract and does not relieve the Contractor of any of its obligations under the contract, including design and detailing.

Contract No.: DB11002F

By: _____ **Date:** _____

KEY PLAN

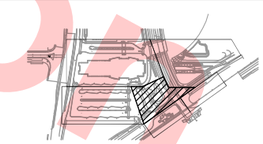

Not For Construction

REV	DATE	BY	SUB	APP	DESCRIPTION
0	20130710				READINESS FOR CONSTRUCTION

DESIGNED BY J. WU
DRAWN BY J. WU
CHECKED BY J. JI
IN CHARGE J. JI
DATE 20130710

REGISTERED PROFESSIONAL ENGINEER JUN JI No. C 72794 Exp. 06/30/14 CIVIL STATE OF CALIFORNIA

Skanska Shimmick Herzog
1436 California Circle
Milpitas, California 95035
A Joint Venture

KAL KRISHNAN CONSULTING SERVICES
300 LAKESIDE DRIVE, SUITE #220
OAKLAND, CA 94612
SUBMITTED

Lockwood, Andrews & Newnam, Inc. A CH2M HILL COMPANY
T·Y·LIN INTERNATIONAL
APPROVED

VTA BART SILICON VALLEY
BART SILICON VALLEY BERRYESSA EXTENSION

LINE, TRACK, STATIONS AND SYSTEMS
DESIGN UNIT 023
MILPITAS STATION
DRAINAGE PLAN

SHEET 4 OF 4

CADD FILENAME C700-S-DB-C207.dwg
SIZE D | SCALE 1"=20'
CONTRACT NO. C700 | REV. 0
AREA CODE DB | SHEET NO. C207 | PAGE NO. 0039

Jun 26, 2013 - 6:11pm M:\CC PROJECTS\SVBX\5.0 Deliverables\5.2 Drawings\Milpitas Station\Civil\C700-S-DB-C207.dwg
judy

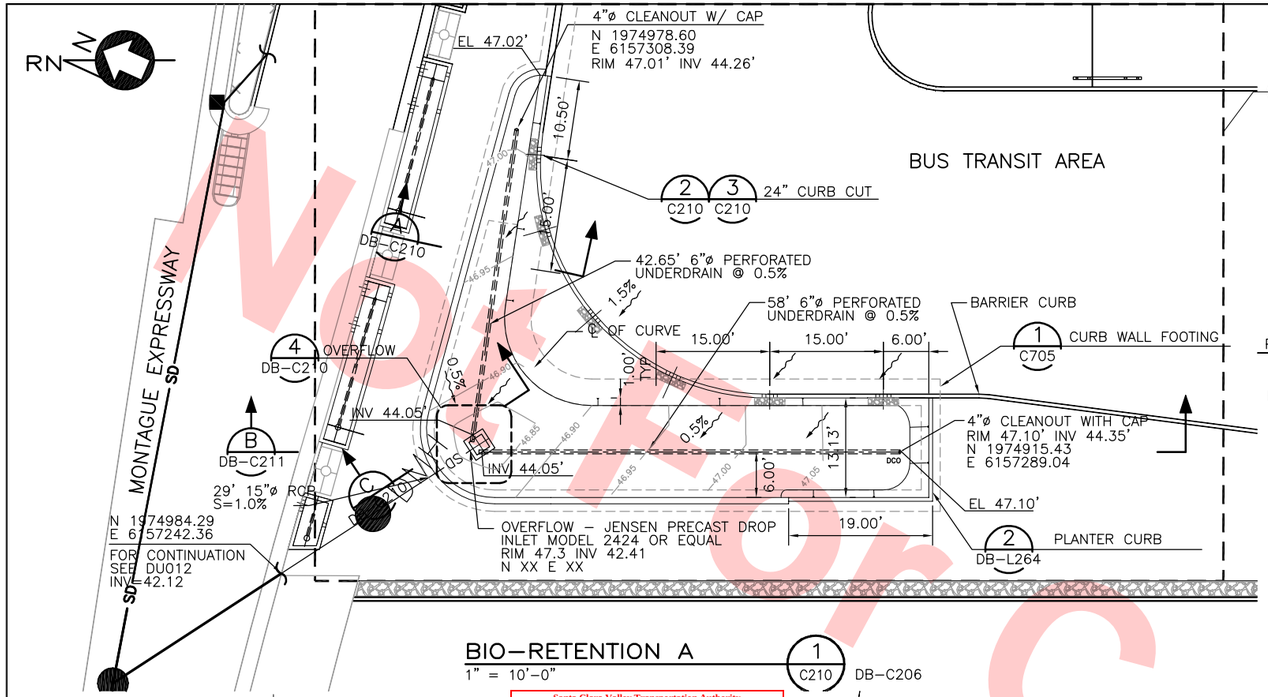

BIO-RETENTION A

1" = 10'-0"

1 C210

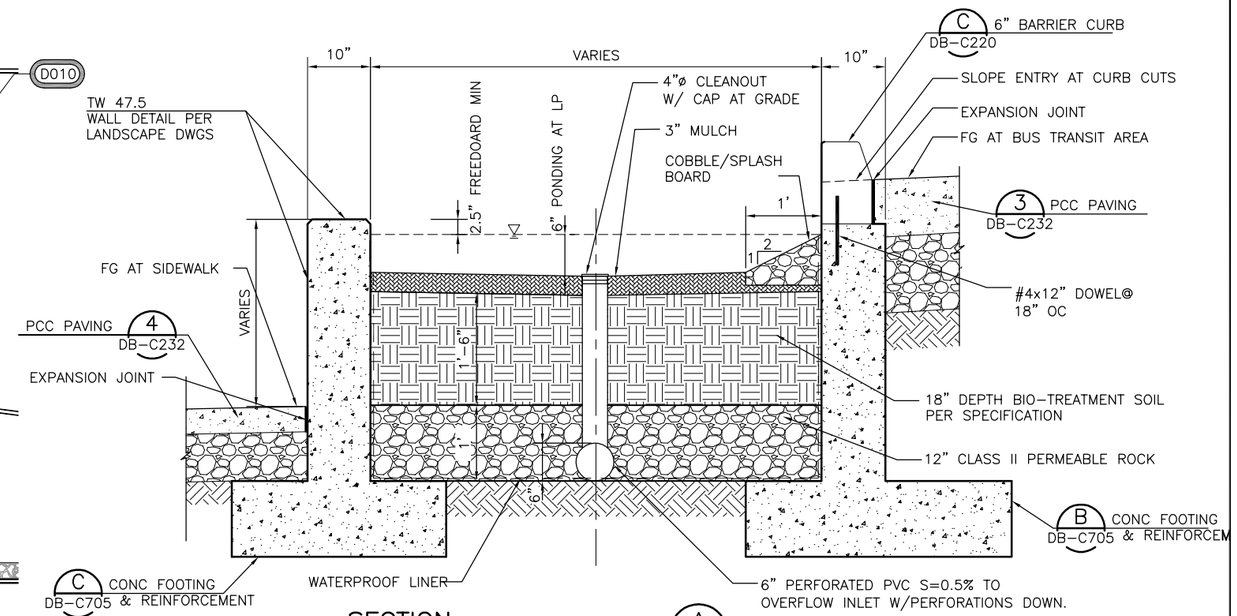

SECTION

1" = 1'-0"

A C210

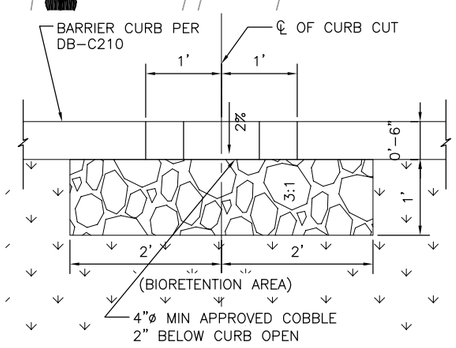

CURB OPEN PLAN

1" = 1'-0"

2 C210

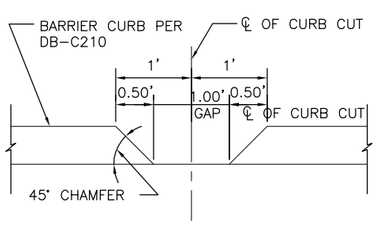

CURB OPEN ELEVATION

1" = 1'-0"

3 C210

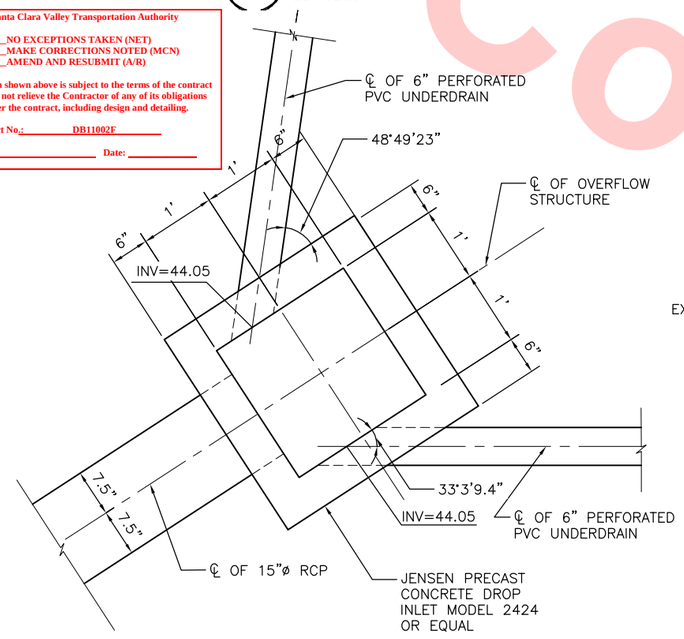

OVERFLOW STRUCTURE

1" = 1'-0"

4 C210

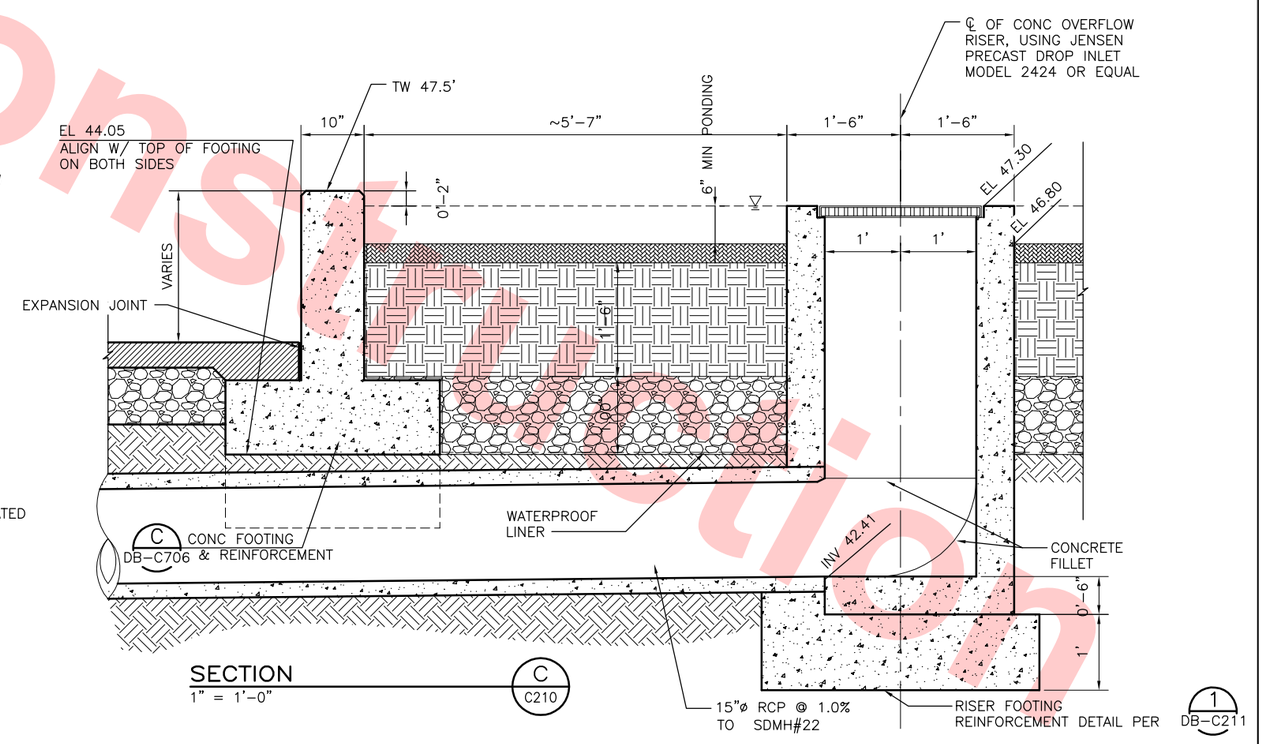

SECTION

1" = 1'-0"

C C210

Not For Construction

Santa Clara Valley Transportation Authority

___NO EXCEPTIONS TAKEN (NET)
___MAKE CORRECTIONS NOTED (MCN)
___AMEND AND RESUBMIT (A/R)

Any action shown above is subject to the terms of the contract and does not relieve the Contractor of any of its obligations under the contract, including design and detailing.

Contract No.: DB11002F

By: _____ Date: _____

REV	DATE	BY	SUB	APP	DESCRIPTION
0	20130710				READINESS FOR CONSTRUCTION

DESIGNED BY J. WU
DRAWN BY J. WU
CHECKED BY J. JI
IN CHARGE J. JI
DATE 20130710

REGISTERED PROFESSIONAL ENGINEER JUN JI No. C 72794 Exp. 06/30/14 CIVIL STATE OF CALIFORNIA

Skanska Shimmick Herzog
1436 California Circle
Milpitas, California 95035
A Joint Venture

KAL KRISHNAN CONSULTING SERVICES
300 LAKESIDE DRIVE, SUITE #220
OAKLAND, CA 94612
SUBMITTED

Lockwood, Andrews & Newnam, Inc. A LEO A DALY COMPANY
T·Y·LIN INTERNATIONAL
APPROVED

VTA BART SILICON VALLEY
BART SILICON VALLEY BERRYESSA EXTENSION

LINE, TRACK, STATIONS AND SYSTEMS
DESIGN UNIT 023
MILPITAS STATION
DRAINAGE DETAILS–BIO–RETENTION A

SHEET 1 OF 2

CADD FILENAME C700-S-DB-C210.dwg
SIZE D | SCALE AS NOTED
CONTRACT NO. C700 | REV. 0
AREA CODE DB | SHEET NO. C210 | PAGE NO. 0040

Jun 26, 2013 – 1:35pm M:\OC PROJECTS\SVBX\5.0 Deliverables\5.2 Drawings\Milpitas Station\Civil\C700-S-DB-C210.dwg
jjudy

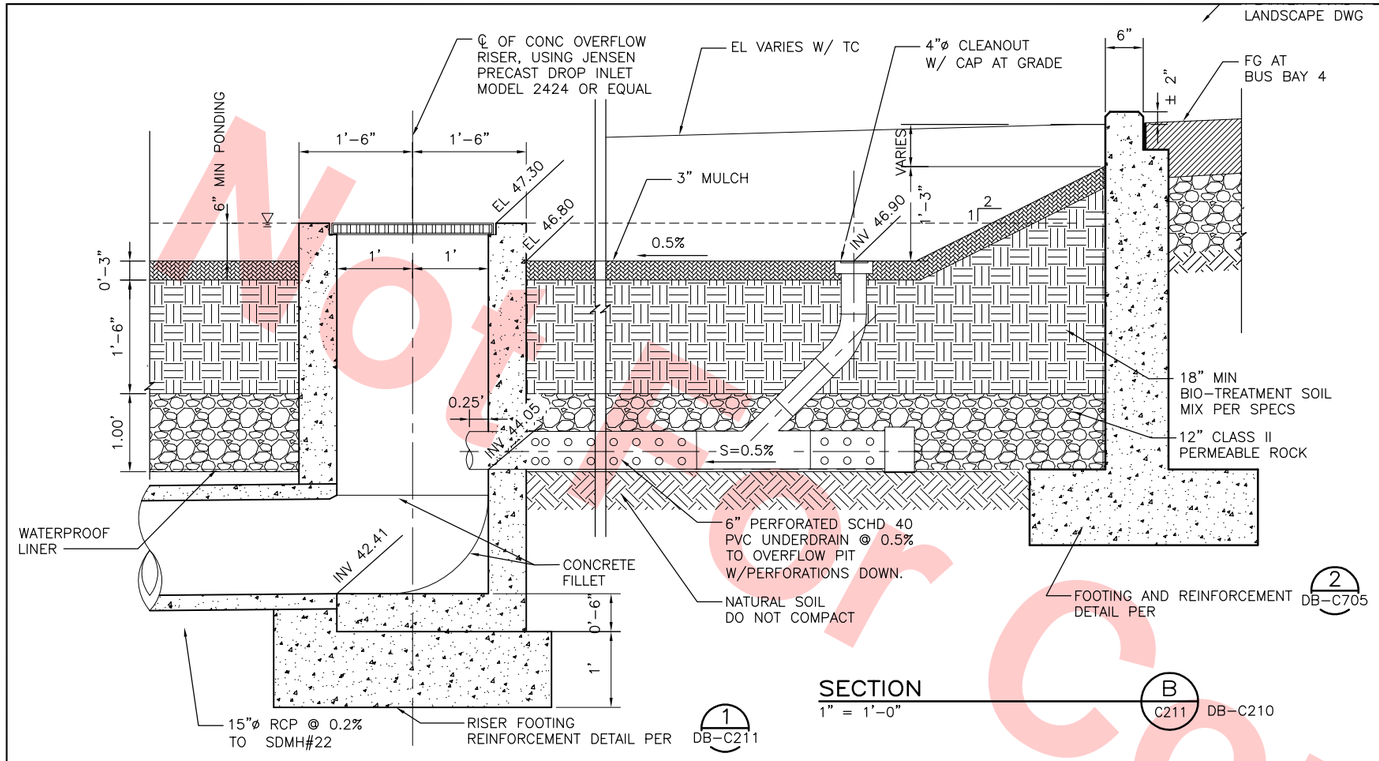

SECTION B C211 DB-C210
1" = 1'-0"

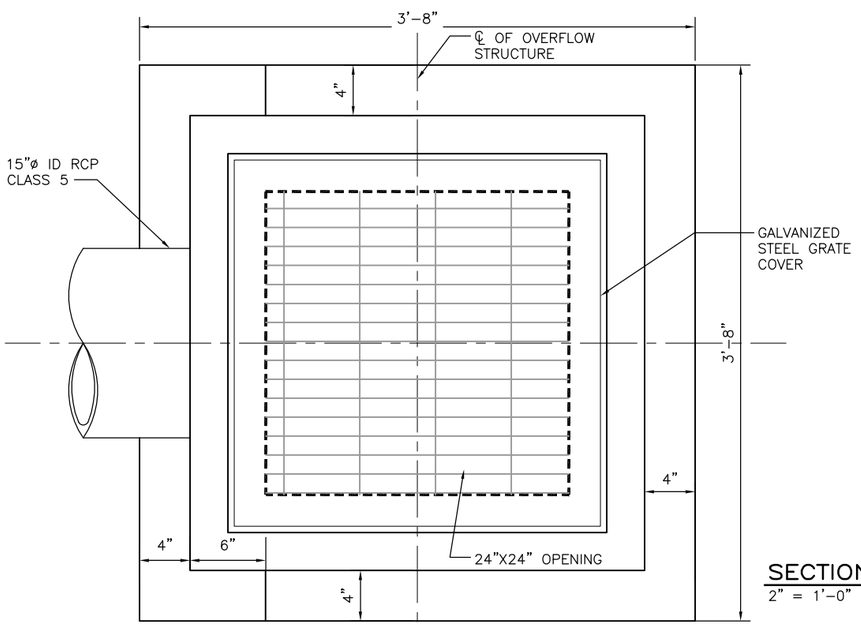

SECTION A C211
2" = 1'-0"

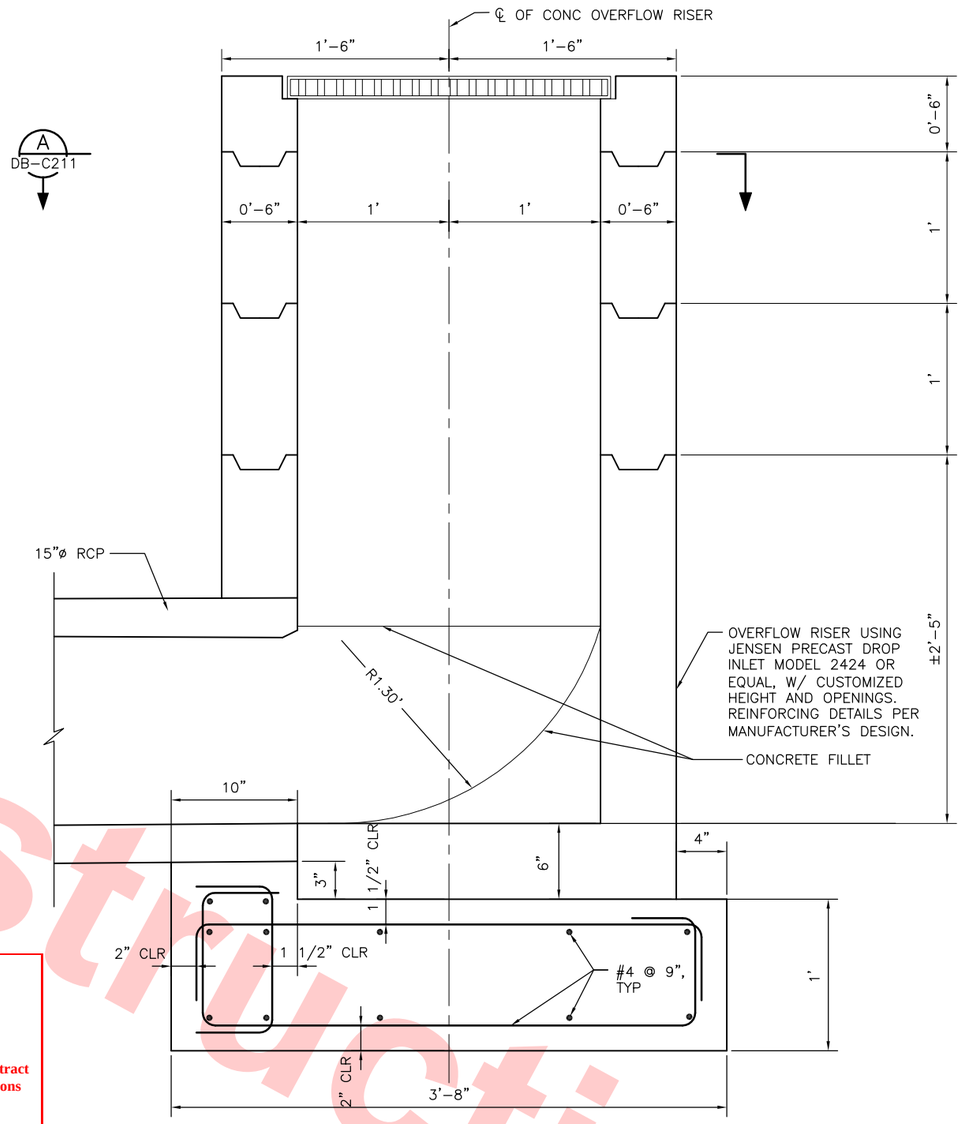

OVERFLOW RISE ENINFORCEMENT 1 C211
2" = 1'-0"

Santa Clara Valley Transportation Authority

____NO EXCEPTIONS TAKEN (NET)
____MAKE CORRECTIONS NOTED (MCN)
____AMEND AND RESUBMIT (A/R)

Any action shown above is subject to the terms of the contract and does not relieve the Contractor of any of its obligations under the contract, including design and detailing.

Contract No.: DB11002F

By: _____ **Date:** _____

Not for Construction

REV	DATE	BY	SUB	APP	DESCRIPTION
0	20130710				READINESS FOR CONSTRUCTION

DESIGNED BY J. WU
DRAWN BY J. WU
CHECKED BY J. JI
IN CHARGE J. JI
DATE 20130710

REGISTERED PROFESSIONAL ENGINEER JUN JI No. C 72794 Exp. 06/30/14 CIVIL STATE OF CALIFORNIA

Skanska Shimmick Herzog
1436 California Circle Milpitas, California 95035
A Joint Venture

KAL KRISHNAN CONSULTING SERVICES
300 LAKESIDE DRIVE, SUITE #220 OAKLAND, CA 94612
SUBMITTED

Lockwood, Andrews & Newnam, Inc. A CH2M HILL COMPANY
T·Y·LIN INTERNATIONAL
APPROVED

VTA BART SILICON VALLEY
BART SILICON VALLEY BERRYESSA EXTENSION

LINE, TRACK, STATIONS AND SYSTEMS
DESIGN UNIT 023
MILPITAS STATION
DRAINAGE DETAILS–BIORETENTION A
SHEET 2 OF 2

CADD FILENAME C700-S-DB-C211.dwg
SIZE D | SCALE AS NOTED
CONTRACT NO. C700 | REV. 0
AREA CODE DB | SHEET NO. C211 | PAGE NO. 0041

Jun 26, 2013 – 1:37pm M:\CC PROJECTS\SVBX\5.0 Deliverables\5.2 Drawings\Milpitas Station\Civil\C700-S-DB-C211.dwg
judy

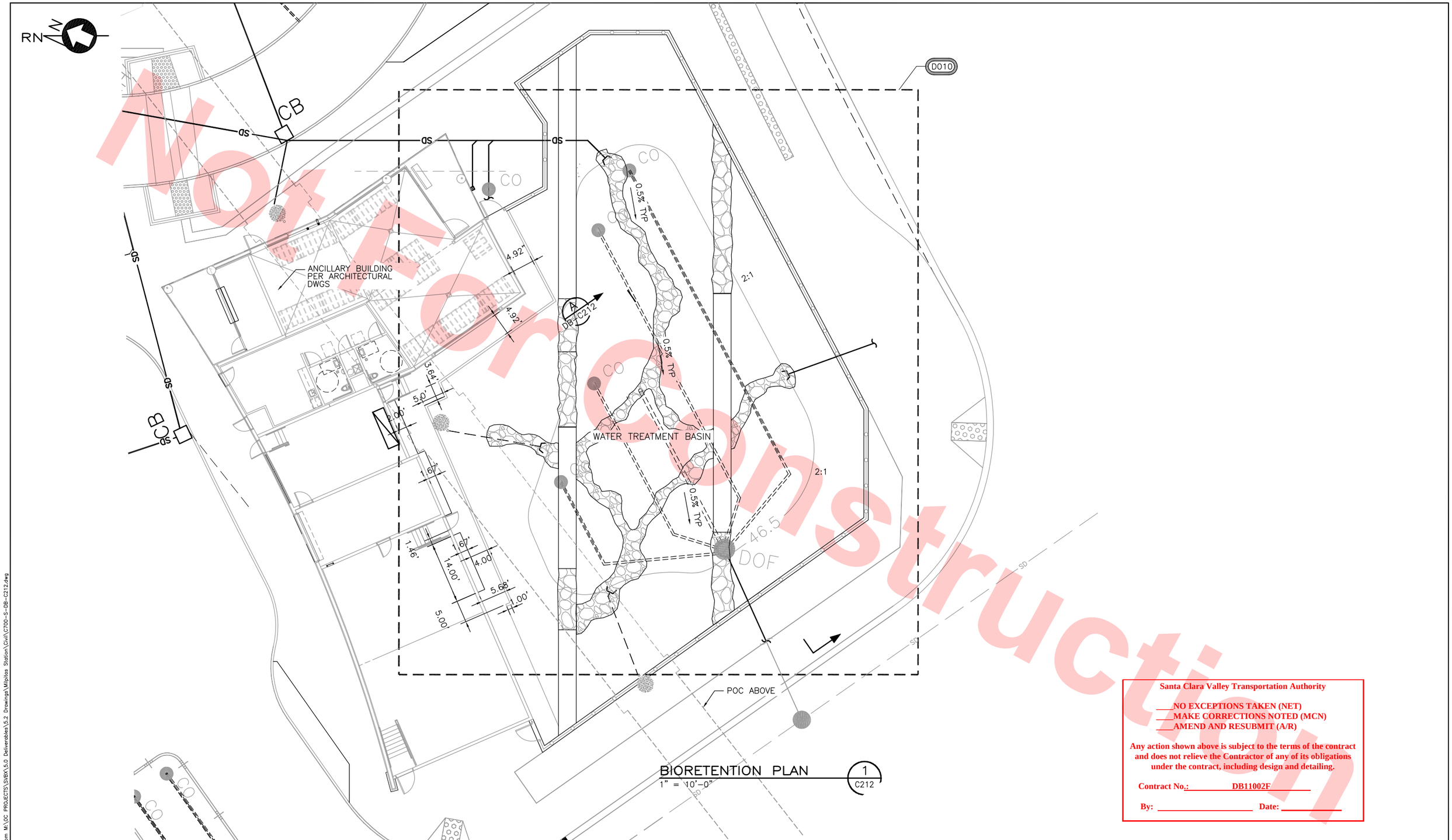

BIORETENTION PLAN 1 C212
1" = 10'-0"

Not for Construction

Santa Clara Valley Transportation Authority

____NO EXCEPTIONS TAKEN (NET)
____MAKE CORRECTIONS NOTED (MCN)
____AMEND AND RESUBMIT (A/R)

Any action shown above is subject to the terms of the contract and does not relieve the Contractor of any of its obligations under the contract, including design and detailing.

Contract No.: DB11002F

By: _____ Date: _____

REV	DATE	BY	SUB	APP	DESCRIPTION
0	20130710				READINESS FOR CONSTRUCTION

DESIGNED BY J. WU
DRAWN BY J. WU
CHECKED BY J. JI
IN CHARGE J. JI
DATE 20130710

REGISTERED PROFESSIONAL ENGINEER JUN JI No. C 72794 Exp. 06/30/14 CIVIL STATE OF CALIFORNIA

Skanska Shimmick Herzog
1436 California Circle
Milpitas, California 95035
A Joint Venture

KAL KRISHNAN CONSULTING SERVICES
300 LAKESIDE DRIVE, SUITE #220
OAKLAND, CA 94612
SUBMITTED

Lockwood, Andrews & Newnam, Inc. A CH2M HILL COMPANY
T·Y·LIN INTERNATIONAL
APPROVED

VTA BART SILICON VALLEY
BART SILICON VALLEY BERRYESSA EXTENSION

LINE, TRACK, STATIONS AND SYSTEMS
DESIGN UNIT 023
MILPITAS STATION
DRAINAGE DETAILS
WATER TREATMENT BASIN
SHEET 1 OF 2

CADD FILENAME C700-S-DB-C212.dwg
SIZE D | SCALE 1"=10'
CONTRACT NO. C700 | REV. 0
AREA CODE DB | SHEET NO. C212 | PAGE NO. 0042

Jun 26, 2013 - 2:02pm M:\OC PROJECTS\SVBX\5.0 Deliverables\5.2 Drawings\Milpitas Station\Civil\C700-S-DB-C212.dwg

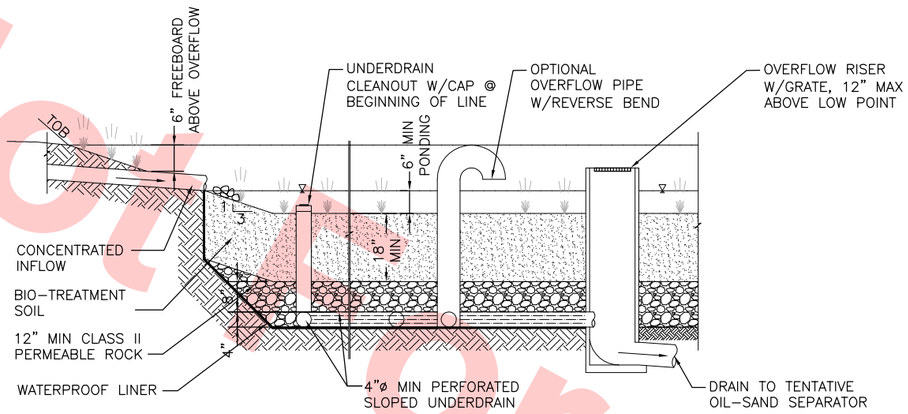

SECTION 1 / C-213 DB-C212

NTS

D010

Not For Construction

Santa Clara Valley Transportation Authority

____NO EXCEPTIONS TAKEN (NET)
____MAKE CORRECTIONS NOTED (MCN)
____AMEND AND RESUBMIT (A/R)

Any action shown above is subject to the terms of the contract and does not relieve the Contractor of any of its obligations under the contract, including design and detailing.

Contract No.: DB11002F

By: _____ Date: _____

REV	DATE	BY	SUB	APP	DESCRIPTION
0	20130710				READINESS FOR CONSTRUCTION

DESIGNED BY J. WU
DRAWN BY J. WU
CHECKED BY J. JI
IN CHARGE J. JI
DATE 20130710

REGISTERED PROFESSIONAL ENGINEER JUN JI No. C 72794 Exp. 06/30/14 CIVIL STATE OF CALIFORNIA

Skanska Shimmick Herzog
1436 California Circle
Milpitas, California 95035
A Joint Venture

KAL KRISHNAN CONSULTING SERVICES
300 LAKESIDE DRIVE, SUITE #220
OAKLAND, CA 94612

Lockwood, Andrews & Newnam, Inc. A LEO A DALY COMPANY
T·Y·LIN INTERNATIONAL

SUBMITTED _____
APPROVED _____

VTA BART SILICON VALLEY
BART SILICON VALLEY BERRYESSA EXTENSION

LINE, TRACK, STATIONS AND SYSTEMS
MILPITAS STATION

DRAINAGE DETAILS
WATER TREATMENT BASIN
SHEET 2 OF 2

CADD FILENAME C700-S-DB-C213.dwg
SIZE D | SCALE 1"=10'
CONTRACT NO. C700 | REV. 0
AREA CODE DB | SHEET NO. C213 | PAGE NO. 0043

Jun 26, 2013 – 3:20pm M:\OC PROJECTS\SVBX\5.0 Deliverables\5.2 Drawings\Milpitas Station\Civil\C700-S-DB-C213.dwg
jurdy

Santa Clara Valley Transportation Authority

____NO EXCEPTIONS TAKEN (NET)
____MAKE CORRECTIONS NOTED (MCN)
____AMEND AND RESUBMIT (A/R)

Any action shown above is subject to the terms of the contract and does not relieve the Contractor of any of its obligations under the contract, including design and detailing.

Contract No.: DB11002F

By: _____ Date: _____

Not For Construction

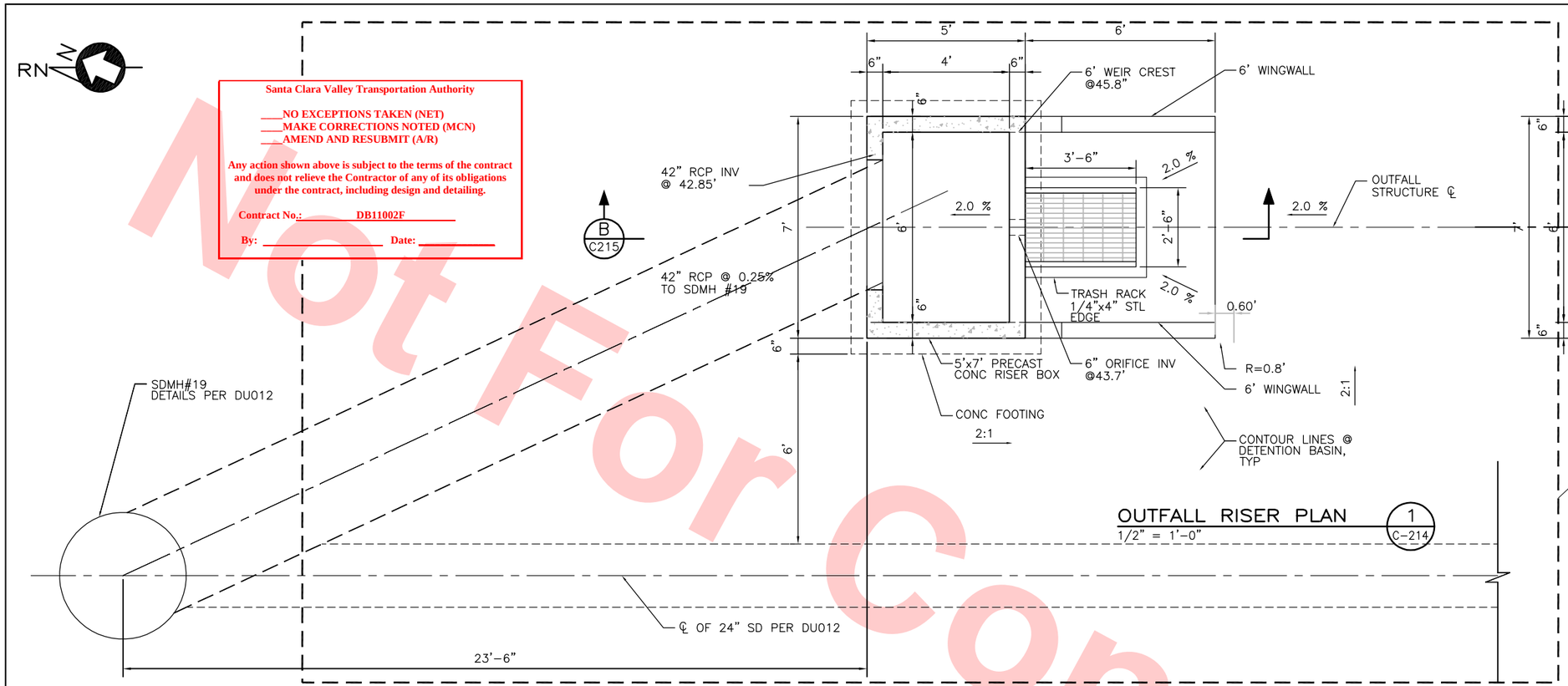

OUTFALL RISER PLAN (1 / C-214)
1/2" = 1'-0"

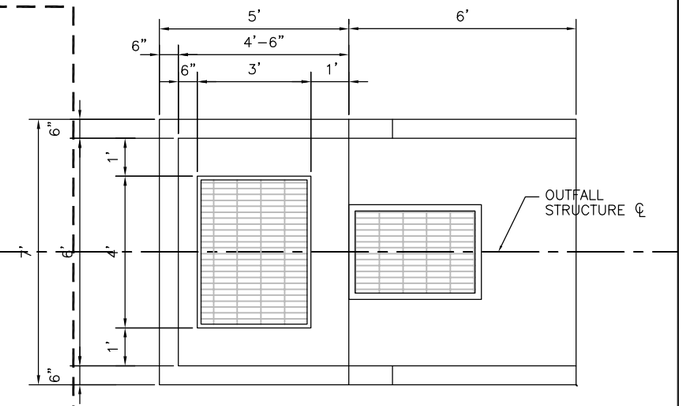

RISER TOP VIEW (2 / C-214)
1/2" = 1'-0"

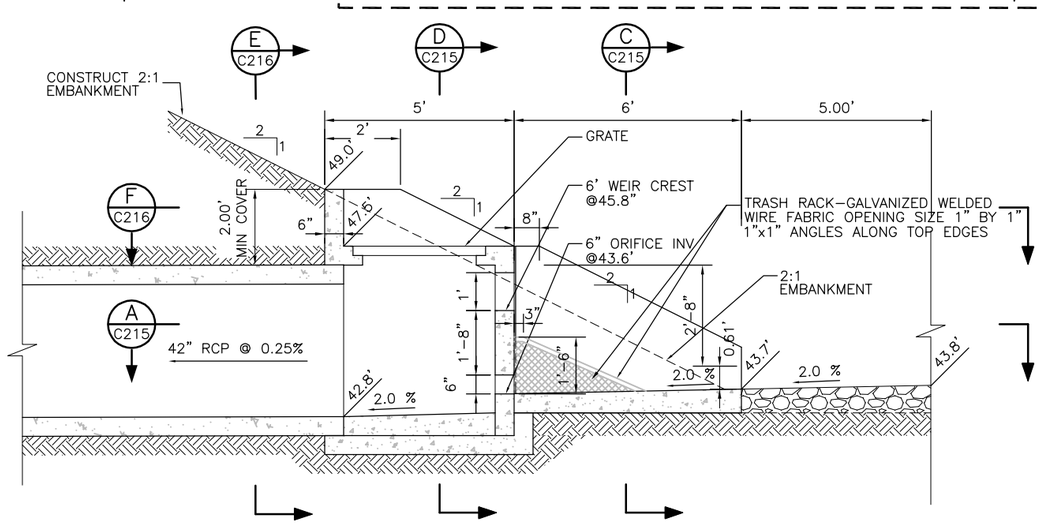

SECTION (3 / C-214)
1/2" = 1'-0"

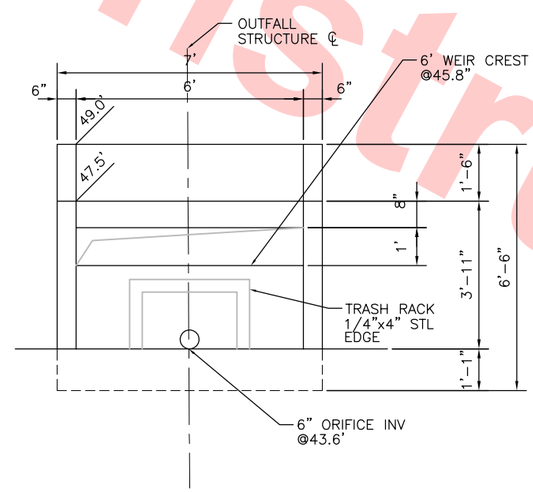

RISER FRONT ELEVATION (4 / C-214)
1/2" = 1'-0"

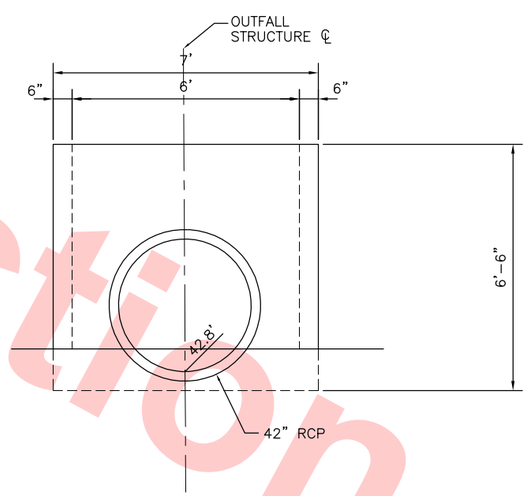

RISER BACK ELEVATION (5 / C-214)
1/2" = 1'-0"

REV	DATE	BY	SUB	APP	DESCRIPTION
0	20130710				READINESS FOR CONSTRUCTION

DESIGNED BY J. WU
DRAWN BY J. WU
CHECKED BY J. JI
IN CHARGE J. JI
DATE 20130710

REGISTERED PROFESSIONAL ENGINEER JUN JI No. C 72794 Exp. 06/30/14 CIVIL STATE OF CALIFORNIA

Skanska Shimmick Herzog
1436 California Circle
Milpitas, California 95035
A Joint Venture

KAL KRISHNAN CONSULTING SERVICES
300 LAKESIDE DRIVE, SUITE #220
OAKLAND, CA 94612

SUBMITTED

Lockwood, Andrews & Newnam, Inc. A LEO A DALY COMPANY
T-Y-LIN INTERNATIONAL

APPROVED

VTA BART SILICON VALLEY
BART SILICON VALLEY BERRYESSA EXTENSION

LINE, TRACK, STATIONS AND SYSTEMS
DESIGN UNIT 023
MILPITAS STATION
DRAINAGE DETAILS – DETENTION BASIN

SHEET 1 OF 3

CADD FILENAME C700-S-DB-C214.dwg
SIZE D | SCALE NONE
CONTRACT NO. C700 | REV. 0
AREA CODE DB | SHEET NO. C214 | PAGE NO. 0044

Jun 26, 2013 – 2:23pm M:\DC PROJECTS\SVBX\5.0 Deliverables\5.2 Drawings\Milpitas Station\Civil\C700-S-DB-C214.dwg

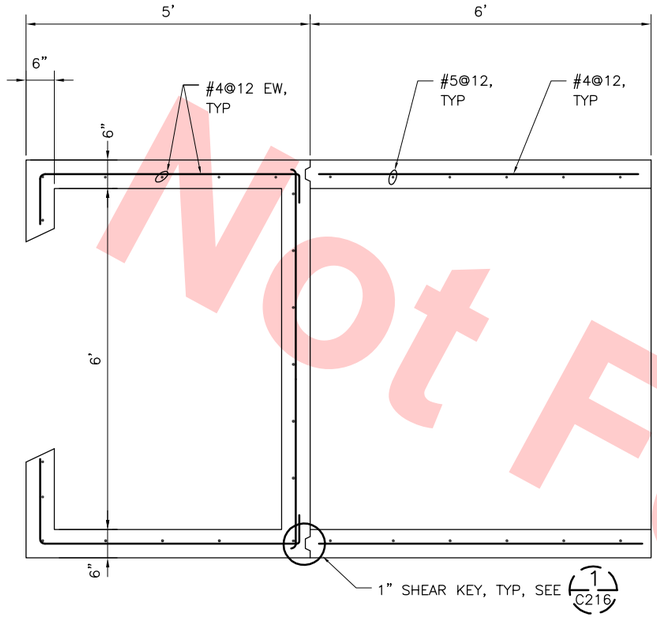

SECTION A C215 C214
3/4" = 1'-0"

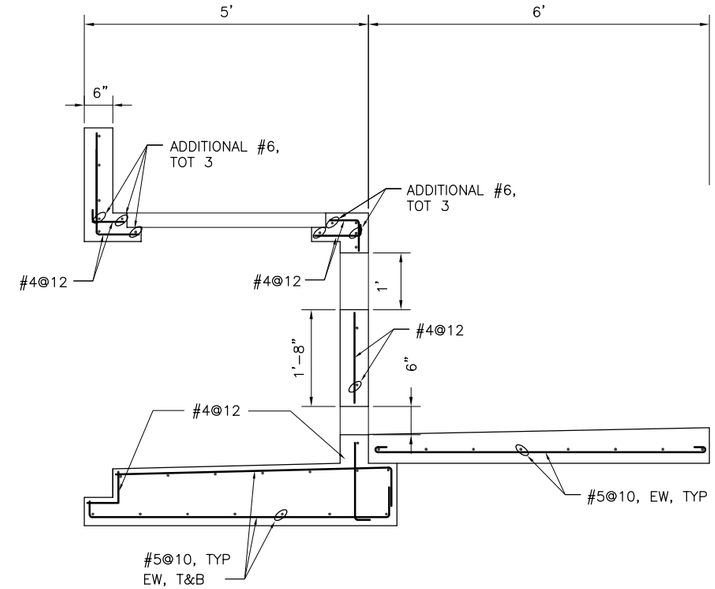

SECTION B C215 C214
3/4" = 1'-0"

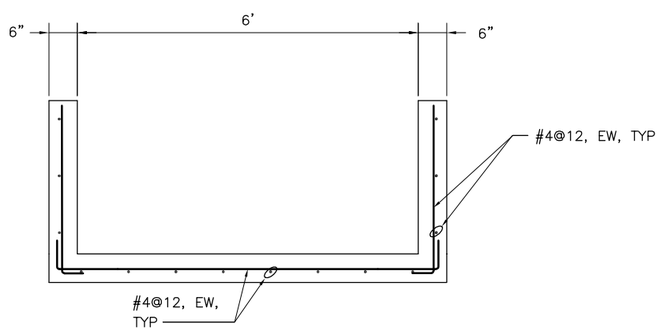

SECTION C C215 C214
3/4" = 1'-0"

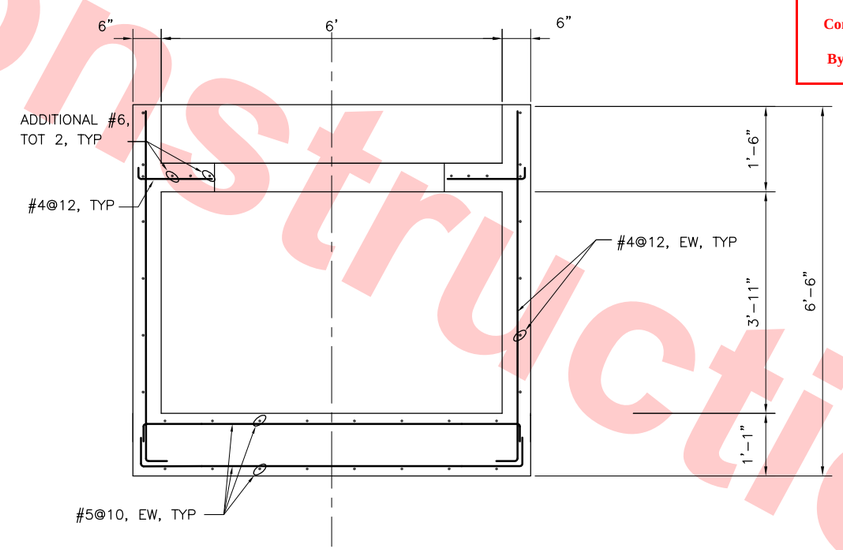

SECTION D C215 C214
3/4" = 1'-0"

Santa Clara Valley Transportation Authority

____NO EXCEPTIONS TAKEN (NET)
____MAKE CORRECTIONS NOTED (MCN)
____AMEND AND RESUBMIT (A/R)

Any action shown above is subject to the terms of the contract and does not relieve the Contractor of any of its obligations under the contract, including design and detailing.

Contract No.: DB11002F

By: _____ Date: _____

Not For Construction

REV	DATE	BY	SUB	APP	DESCRIPTION
0	20130710				READINESS FOR CONSTRUCTION

DESIGNED BY H. SHI
DRAWN BY H. SHI
CHECKED BY J. JI
IN CHARGE J. JI
DATE 20130710

REGISTERED PROFESSIONAL ENGINEER JUN JI No. C 72794 Exp. 06/30/14 CIVIL STATE OF CALIFORNIA

Skanska Shimmick Herzog
1436 California Circle Milpitas, California 95035
A Joint Venture

KAL KRISHNAN CONSULTING SERVICES
300 LAKESIDE DRIVE, SUITE #220 OAKLAND, CA 94612

SUBMITTED

Lockwood, Andrews & Newnam, Inc. A CH2M HILL COMPANY
T·Y·LIN INTERNATIONAL

APPROVED

VTA BART SILICON VALLEY
BART SILICON VALLEY BERRYESSA EXTENSION

LINE, TRACK, STATIONS AND SYSTEMS
DESIGN UNIT 023
MILPITAS STATION
DRAINAGE DETAILS – DETENTION BASIN

SHEET 2 OF 3

CADD FILENAME C700-S-DB-C215.dwg
SIZE D | SCALE 3/4"=1'
CONTRACT NO. C700 | REV. 0
AREA CODE DB | SHEET NO. C215 | PAGE NO. 0045

Jun 26, 2013 – 2:24pm M:\QC PROJECTS\SVBX\5.0 Deliverables\5.2 Drawings\Milpitas Station\Civil\C700-S-DB-C215.dwg
judy

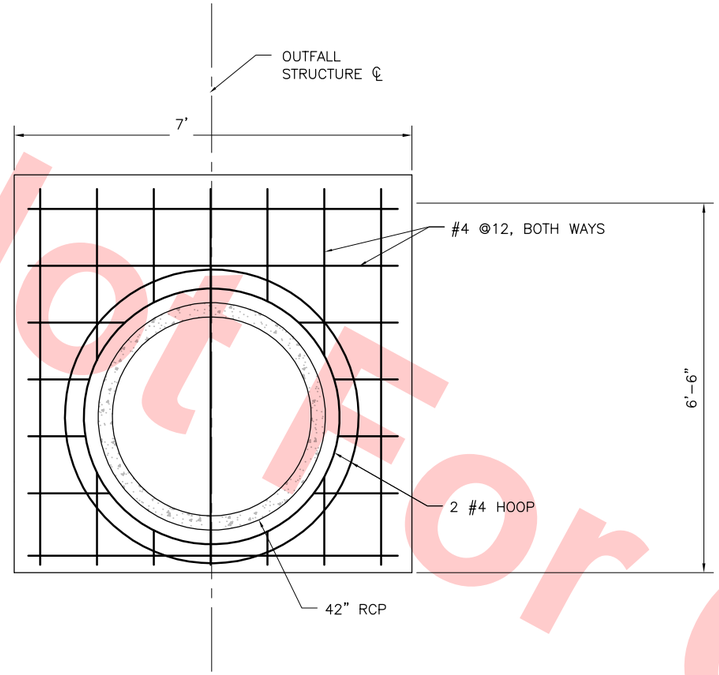

SECTION E C216 C214
3/4" = 1'-0"

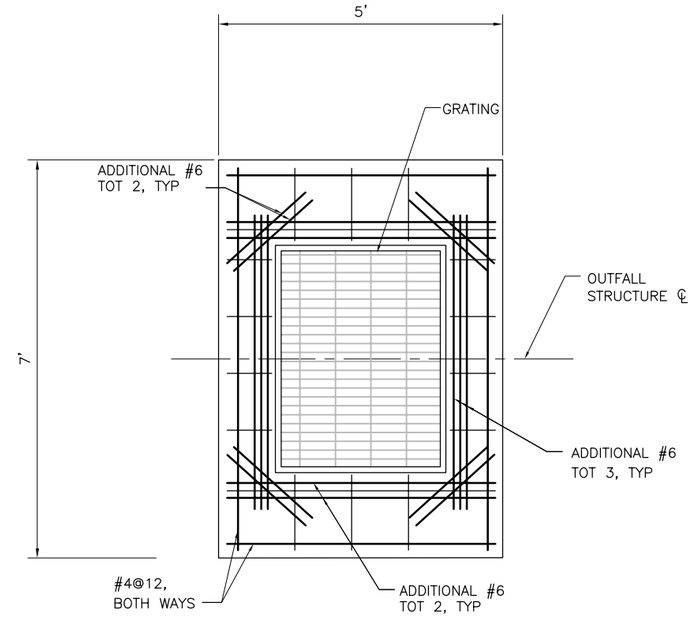

SECTION F C216 C214
3/4" = 1'-0"

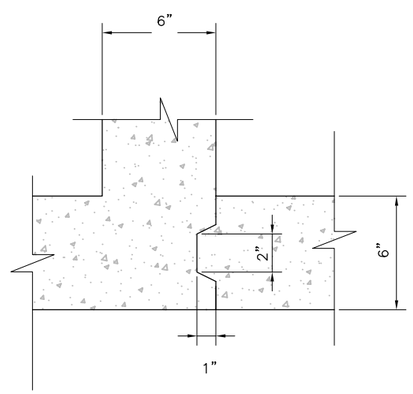

DETAIL 1 C216 C215
NTS

Santa Clara Valley Transportation Authority

____NO EXCEPTIONS TAKEN (NET)
____MAKE CORRECTIONS NOTED (MCN)
____AMEND AND RESUBMIT (A/R)

Any action shown above is subject to the terms of the contract and does not relieve the Contractor of any of its obligations under the contract, including design and detailing.

Contract No.: DB11002F

By: _____ Date: _____

Not For Construction

REV	DATE	BY	SUB	APP	DESCRIPTION
0	20130710				READINESS FOR CONSTRUCTION

DESIGNED BY H. SHI
DRAWN BY H. SHI
CHECKED BY J. JI
IN CHARGE J. JI
DATE 20130710

REGISTERED PROFESSIONAL ENGINEER JUN JI No. C 72794 Exp. 06/30/14 CIVIL STATE OF CALIFORNIA

Skanska Shimmick Herzog
1436 California Circle
Milpitas, California 95035
A Joint Venture

KAL KRISHNAN CONSULTING SERVICES
300 LAKESIDE DRIVE, SUITE #220
OAKLAND, CA 94612

Lockwood, Andrews & Newnam, Inc. A CH2M HILL COMPANY
T-Y-LIN INTERNATIONAL

SUBMITTED _____
APPROVED _____

VTA BART SILICON VALLEY
BART SILICON VALLEY BERRYESSA EXTENSION

LINE, TRACK, STATIONS AND SYSTEMS
DESIGN UNIT 023
MILPITAS STATION
DRAINAGE DETAILS – DETENTION BASIN

SHEET 3 OF 3

CADD FILENAME C700-S-DB-C216.dwg
SIZE D | SCALE AS NOTED
CONTRACT NO. C700 | REV. 0
AREA CODE DB | SHEET NO. C216 | PAGE NO. 0046

Jun 26, 2013 – 2:26pm M:\OC PROJECTS\SVBX\5.0 Deliverables\5.2 Drawings\Milpitas Station\Civil\C700-S-DB-C216.dwg
judy

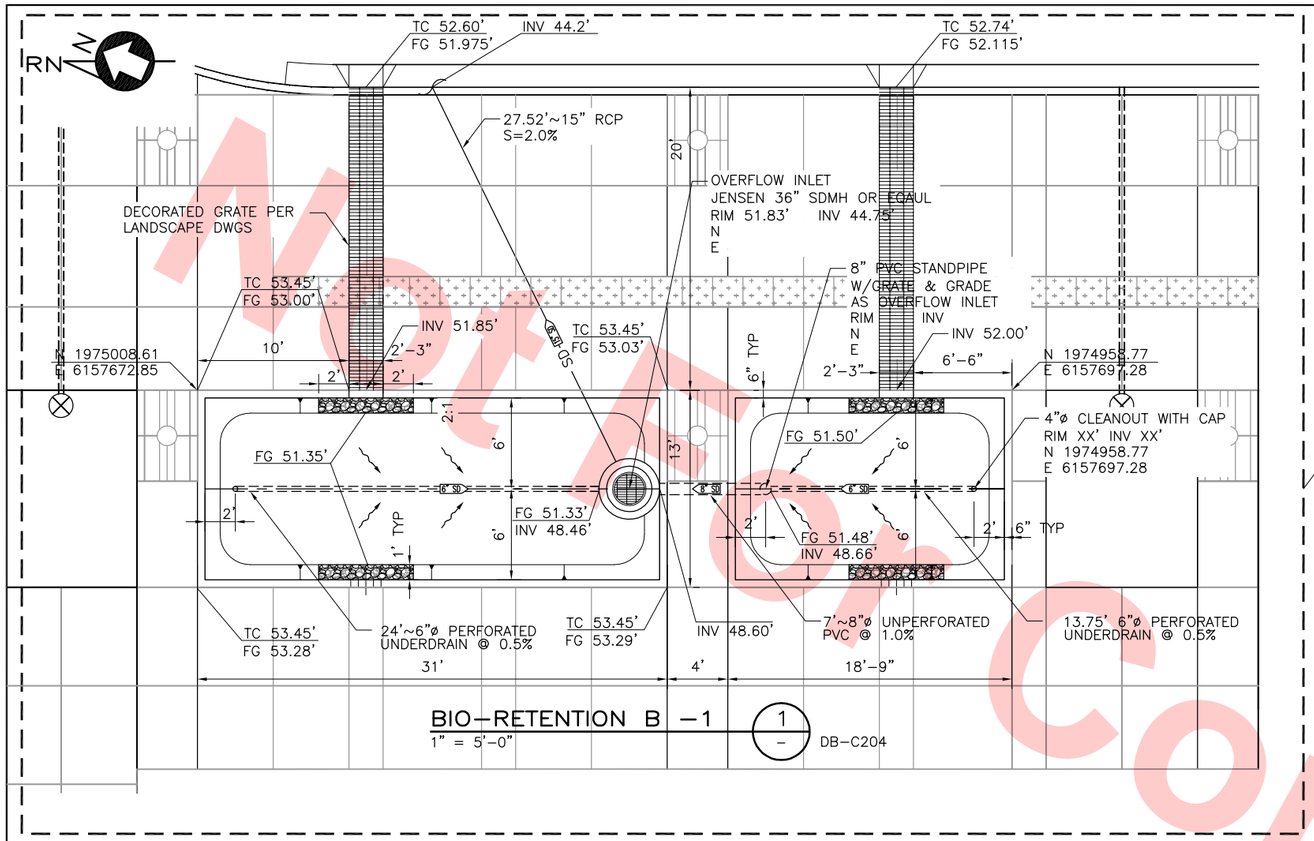

D010

Santa Clara Valley Transportation Authority

____NO EXCEPTIONS TAKEN (NET)
____MAKE CORRECTIONS NOTED (MCN)
____AMEND AND RESUBMIT (A/R)

Any action shown above is subject to the terms of the contract and does not relieve the Contractor of any of its obligations under the contract, including design and detailing.

Contract No.: DB11002F

By: _____ Date: _____

Not For Construction

REV	DATE	BY	SUB	APP	DESCRIPTION
0	20130710				READINESS FOR CONSTRUCTION

DESIGNED BY J. WU
DRAWN BY J. WU
CHECKED BY J. JI
IN CHARGE J. JI
DATE 20130710

REGISTERED PROFESSIONAL ENGINEER JUN JI No. C 72794 Exp. 06/30/14 CIVIL STATE OF CALIFORNIA

Skanska Shimmick Herzog
1436 California Circle
Milpitas, California 95035
A Joint Venture

KAL KRISHNAN CONSULTING SERVICES
300 LAKESIDE DRIVE, SUITE #220
OAKLAND, CA 94612

Lockwood, Andrews & Newnam, Inc. A LEO A DALY COMPANY
T·Y·LIN INTERNATIONAL

SUBMITTED _____
APPROVED _____

VTA BART SILICON VALLEY
BART SILICON VALLEY BERRYESSA EXTENSION

LINE, TRACK, STATIONS AND SYSTEMS
DESIGN UNIT 023
MILPITAS STATION
DRAINAGE DETAILS-BIO-RETENTION B

SHEET 1 OF 3

CADD FILENAME C700-S-DB-C217.dwg
SIZE D | SCALE AS NOTED
CONTRACT NO. C700 | REV. 0
AREA CODE DB | SHEET NO. C217 | PAGE NO. 0047

judy Jun 26, 2013 - 2:32pm M:\OC PROJECTS\SVBX\5.0 Deliverables\5.2 Drawings\Milpitas Station\Civil\C700-S-DB-C217.dwg

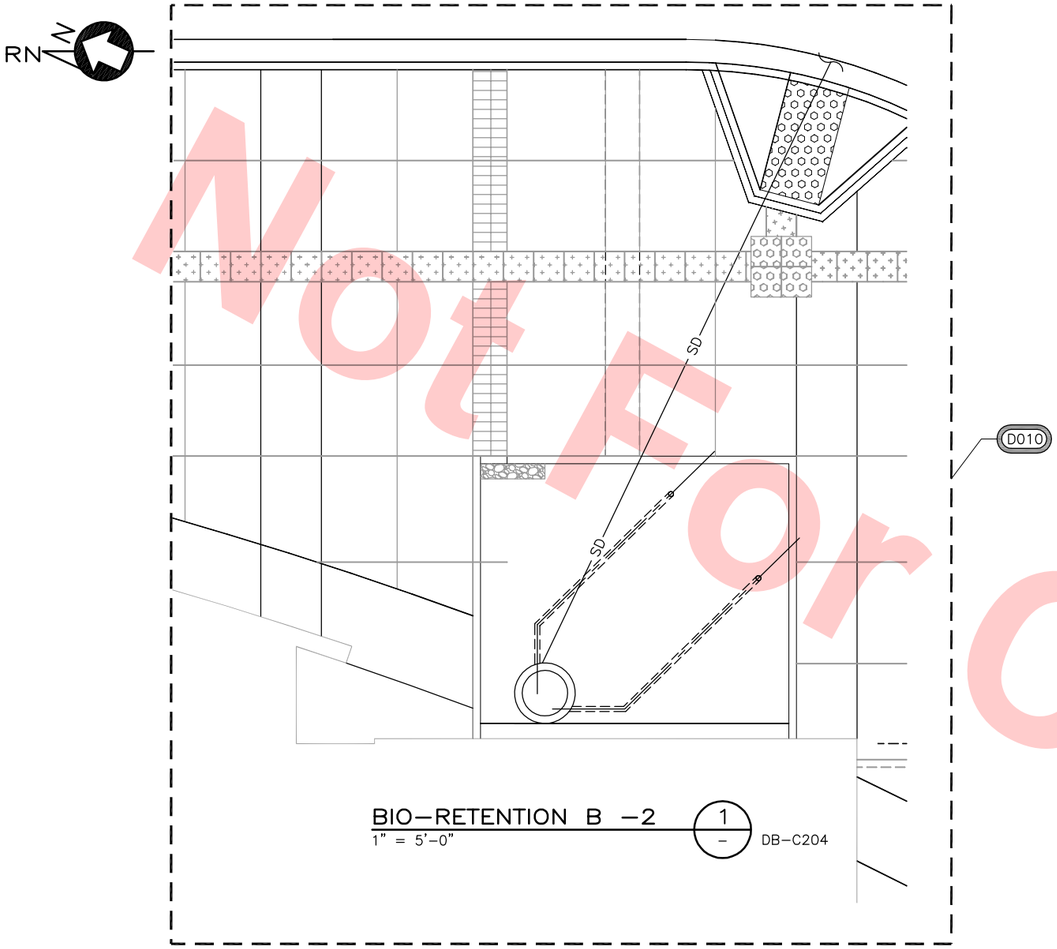

Santa Clara Valley Transportation Authority

____NO EXCEPTIONS TAKEN (NET)
____MAKE CORRECTIONS NOTED (MCN)
____AMEND AND RESUBMIT (A/R)

Any action shown above is subject to the terms of the contract and does not relieve the Contractor of any of its obligations under the contract, including design and detailing.

Contract No.: DB11002F

By: _____ Date: _____

Not For Construction

REV	DATE	BY	SUB	APP	DESCRIPTION
0	20130710				READINESS FOR CONSTRUCTION

DESIGNED BY J. WU
DRAWN BY J. WU
CHECKED BY J. JI
IN CHARGE J. JI
DATE 20130710

REGISTERED PROFESSIONAL ENGINEER JUN JI No. C 72794 Exp. 06/30/14 CIVIL STATE OF CALIFORNIA

Skanska Shimmick Herzog
1436 California Circle
Milpitas, California 95035
A Joint Venture

KAL KRISHNAN CONSULTING SERVICES
300 LAKESIDE DRIVE, SUITE #220
OAKLAND, CA 94612

Lockwood, Andrews & Newnam, Inc. A LEO A DALY COMPANY
T·Y·LIN INTERNATIONAL

SUBMITTED _____
APPROVED _____

VTA BART SILICON VALLEY
BART SILICON VALLEY BERRYESSA EXTENSION

LINE, TRACK, STATIONS AND SYSTEMS
DESIGN UNIT 023
MILPITAS STATION
DRAINAGE DETAILS–BIO–RETENTION B

SHEET 2 OF 3

CADD FILENAME C700–S–DB–C218.dwg
SIZE D | SCALE AS NOTED
CONTRACT NO. C700 | REV. 0
AREA CODE DB | SHEET NO. C218 | PAGE NO. 0048

Jun 26, 2013 – 2:39pm M:\OC PROJECTS\SVBX\5.0 Deliverables\5.2 Drawings\Milpitas Station\Civil\C700–S–DB–C218.dwg
judy

SPACE RESERVED FOR CROSS SECTIONS AND DETAILS OF BIO-RETENTION B

D010

Not For Construction

Santa Clara Valley Transportation Authority

____NO EXCEPTIONS TAKEN (NET)
____MAKE CORRECTIONS NOTED (MCN)
____AMEND AND RESUBMIT (A/R)

Any action shown above is subject to the terms of the contract and does not relieve the Contractor of any of its obligations under the contract, including design and detailing.

Contract No.: DB11002F

By: _____ Date: _____

REV	DATE	BY	SUB	APP	DESCRIPTION
0	20130710				READINESS FOR CONSTRUCTION

DESIGNED BY J. WU
DRAWN BY J. WU
CHECKED BY J. JI
IN CHARGE J. JI
DATE 20130710

REGISTERED PROFESSIONAL ENGINEER JUN JI No. C 72794 Exp. 06/30/14 CIVIL STATE OF CALIFORNIA

Skanska Shimmick Herzog
1436 California Circle
Milpitas, California 95035
A Joint Venture

KAL KRISHNAN CONSULTING SERVICES
300 LAKESIDE DRIVE, SUITE #220
OAKLAND, CA 94612

Lockwood, Andrews & Newnam, Inc. A CH2M HILL COMPANY

T·Y·LIN INTERNATIONAL

SUBMITTED _____

APPROVED _____

VTA BART SILICON VALLEY

BART SILICON VALLEY BERRYESSA EXTENSION

LINE, TRACK, STATIONS AND SYSTEMS
DESIGN UNIT 023
MILPITAS STATION
DRAINAGE DETAILS–BIO–RETENTION B

SHEET 3 OF 3

CADD FILENAME C700-S-DB-C219.dwg
SIZE D | SCALE AS NOTED
CONTRACT NO. C700 | REV. 0
AREA CODE DB | SHEET NO. C219 | PAGE NO. 0049

jurdy Jun 26, 2013 – 2:42pm M:\OC PROJECTS\SVBX\5.0 Deliverables\5.2 Drawings\Milpitas Station\Civil\C700-S-DB-C219.dwg

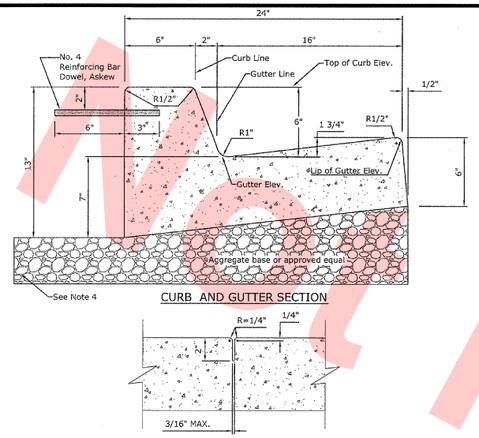

NOTES:

1. Use Portland Cement Concrete containing not less than 564 lbs. of Type I or I/II Portland Cement per cubic yard with a compressive strength of not less than 3000 psi. at 28 days, with a medium broom finish.
2. Dowels shall be used only when the curb is constructed before the contiguous sidewalk (Std. Drawing No's. 425, 426, and 427) and when jointing new curb and gutter to existing concrete curb. Bar spacing shall be 1' each side of the weakened plane joint and on 5' 6" max. centers.
3. Weakened Plane Joints shall be constructed at ends of curb returns, curb inlets, other structures and at 12' intervals except in driveway sections. Joints shall match adjacent improvements.
4. Aggregate base thickness shall be 6" or shall be determined by the extension of the subbase line under the curb, whichever is greater.
5. For curb & gutter replacement; A 1'x1' wdge-cut

NOT TO SCALE

CITY OF MILPITAS, ENGINEERING DIVISION			STANDARD DRAWING
REVISION	DATE	CURB AND GUTTER	NO. 410
1	1991		DATE : 6/15/10
2	2001	APPROVED BY:	
3	2010	3 PUBLIC WORKS DIRECTOR / CITY ENGINEER RCE No. 40283	SHEET 1 OF 1

CURB AND GUTTER
PER CITY OF MILPITAS
STD DETAIL NO. 410 (A / C220)
NOT TO SCALE

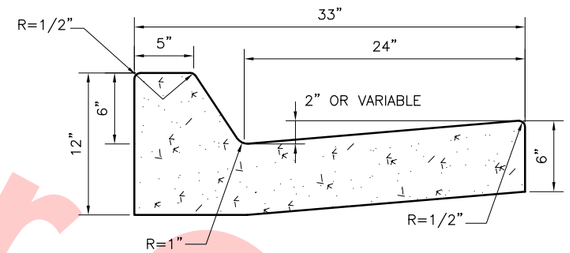

CURB AND GUTTER
PER SANTA CLARA COUNTY
STD DETAIL TYPE B2 (B / C220)
NOT TO SCALE

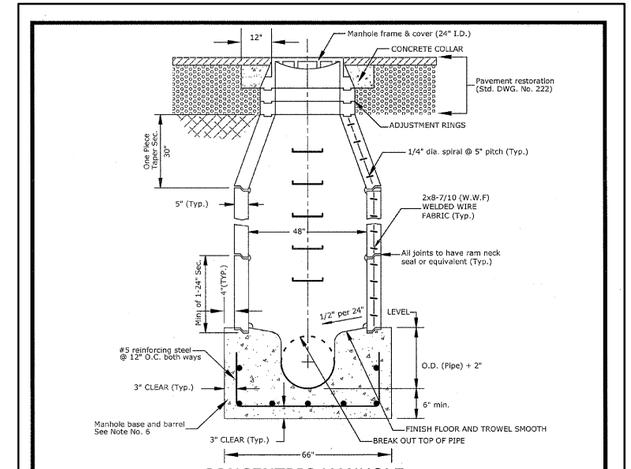

CONCENTRIC MANHOLE

NOTE:

1. P.C.C. shall be Class "A", construct per Section 1.04.14 of Standard Specifications (Cement Type V).
2. Where manhole is constructed in easement or other non street location, manhole frame and cover shall be 6" above ground elevation.
3. Eccentric manhole is preferred over concentric manhole.
4. All manholes are to be constructed watertight.
5. For sanitary sewer manhole, steps shall be placed 13" O.C. from bottom to top. Copolymer polypropylene plastic coated 1/2" grade 60 steel reinforcement by MA Industries PS2-PF or approved equal shall be used. Steps are not to be installed in storm drain manhole.
6. Precast manhole base and barrel shall conform to State Specification Section 70 or approved equal. All castings for manholes, such as rings and covers, shall possess a tensile strength of not less than 16,000 psi.

NOT TO SCALE

CITY OF MILPITAS, ENGINEERING DIVISION			STANDARD DRAWING
REVISION	DATE	SANITARY AND STORM MANHOLE	NO. 230
1	1958		DATE : 6/15/10
2	2001	APPROVED BY:	
3	2010	3 PUBLIC WORKS DIRECTOR / CITY ENGINEER RCE No. 40283	SHEET 1 OF 3

SANITARY AND STORM MANHOLE
STD DETAIL NO. 230 (D / C220)
NOT TO SCALE

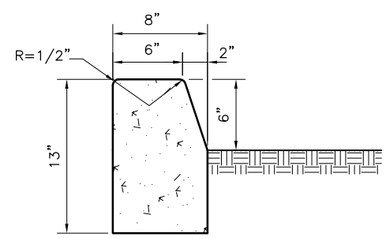

BARRIER CURB (C / C220)
NOT TO SCALE

Santa Clara Valley Transportation Authority

____NO EXCEPTIONS TAKEN (NET)
____MAKE CORRECTIONS NOTED (MCN)
____AMEND AND RESUBMIT (A/R)

Any action shown above is subject to the terms of the contract and does not relieve the Contractor of any of its obligations under the contract, including design and detailing.

Contract No.: DB11002F

By: _____ Date: _____

Not For Construction

REV	DATE	BY	SUB	APP	DESCRIPTION
0	20130710				READINESS FOR CONSTRUCTION

DESIGNED BY J. WU
DRAWN BY J. WU
CHECKED BY J. JI
IN CHARGE J. JI
DATE 20130710

REGISTERED PROFESSIONAL ENGINEER JUN JI No. C 72794 Exp. 06/30/14 CIVIL STATE OF CALIFORNIA

Skanska Shimmick Herzog
1436 California Circle Milpitas, California 95035
A Joint Venture

KAL KRISHNAN CONSULTING SERVICES
300 LAKESIDE DRIVE, SUITE #220 OAKLAND, CA 94612
SUBMITTED

Lockwood, Andrews & Newnam, Inc. A LEO A DALY COMPANY
T·Y·LIN INTERNATIONAL
APPROVED

VTA BART SILICON VALLEY
BART SILICON VALLEY BERRYESSA EXTENSION

LINE, TRACK, STATIONS AND SYSTEMS
DESIGN UNIT 023
MILPITAS STATION
DRAINAGE DETAILS–MISCELLANEOUS
SHEET 1 OF 3

CADD FILENAME C700–S–DB–C220.dwg
SIZE D | SCALE NONE
CONTRACT NO. C700 | REV. 0
AREA CODE DB | SHEET NO. C220 | PAGE NO. 0050

Jun 26, 2013 – 3:22pm M:\OC PROJECTS\SVBX\5.0 Deliverables\5.2 Drawings\Milpitas Station\Civil\C700-S-DB-C220.dwg
jurdy

Not For Construction

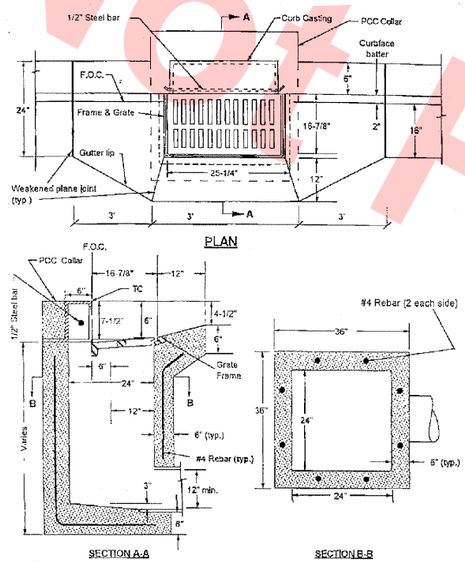

NOTES:
1. Curb casting, gutter frame and grate shall be South Bay Foundry SBF1901 or Phoenix Iron Works No. P-6001 or approved equal.
2. PCC Collar shall not be constructed where sidewalk is contiguous to back of curb.
3. All PCC shall be 'Class A' (6 sack/cy.), or approved 3000 PSI mix.

CITY OF MILPITAS, ENGINEERING DIVISION			STANDARD DRAWING
REVISION	DATE	CURB STORM DRAIN INLET	NO. 462
1	1997		DATE : 6/15/10
2	2001	APPROVED BY:	
3	2010	3 PUBLIC WORKS DIRECTOR / CITY ENGINEER RCE No.40283	SHEET 1 OF 1

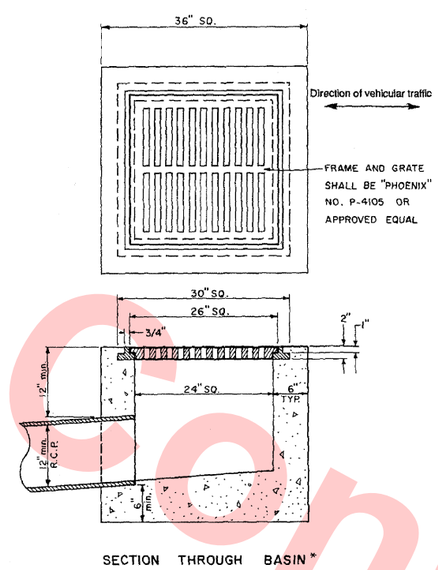

*Or approved pre-cast.

CITY OF MILPITAS, ENGINEERING DIVISION			STANDARD DRAWING
REVISION	DATE	FLAT GRATE STORM INLET	NO. 464
1	1997		DATE : 6/15/10
2	2001	APPROVED BY:	
3	2010	3 PUBLIC WORKS DIRECTOR / CITY ENGINEER RCE No.40283	SHEET 1 OF 1

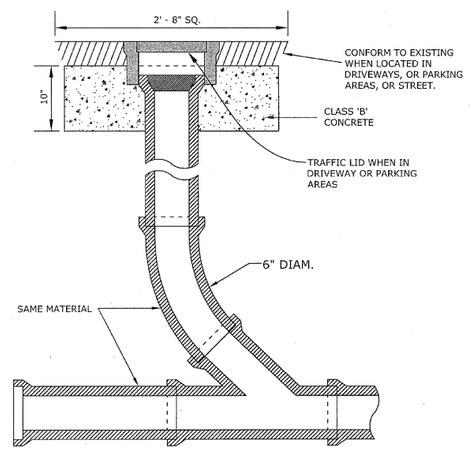

NOTES:
1. All castings to be asphalt coated by hot dip method.
2. Clean out shall be raised to finish surface.
3. Cleanout box and lid shall be Christy G5 BOX and G5C lid and G5GR Grade Ring or approved equal with C.O." or "S" marking.
4. For pipe material see City's Standard Specifications and approved plans.

NOT TO SCALE

CITY OF MILPITAS, ENGINEERING DIVISION			STANDARD DRAWING
REVISION	DATE	STANDARD FLUSHING INLET	NO. 602
1	1991		DATE : 6/15/10
2	2001	APPROVED BY:	
3	2010	3 PUBLIC WORKS DIRECTOR / CITY ENGINEER RCE No. 40283	SHEET 1 OF 1

CURB STORM DRAIN INLET
STD DETAIL NO. 462 — A C221
NOT TO SCALE

FLAT GRATE STORM INLET
STD DETAIL NO. 464 — B C221
NOT TO SCALE

STANDARD FLUSHING INLET
STD DETAIL NO. 602 — C C221
NOT TO SCALE

Santa Clara Valley Transportation Authority

____NO EXCEPTIONS TAKEN (NET)
____MAKE CORRECTIONS NOTED (MCN)
____AMEND AND RESUBMIT (A/R)

Any action shown above is subject to the terms of the contract and does not relieve the Contractor of any of its obligations under the contract, including design and detailing.

Contract No.: DB11002F

By: _____ **Date:** _____

REV	DATE	BY	SUB	APP	DESCRIPTION
0	20130710				READINESS FOR CONSTRUCTION

DESIGNED BY J. WU
DRAWN BY J. WU
CHECKED BY J. JI
IN CHARGE J. JI
DATE 20130710

REGISTERED PROFESSIONAL ENGINEER JUN JI No. C 72794 Exp. 06/30/14 CIVIL STATE OF CALIFORNIA

Skanska Shimmick Herzog
1436 California Circle
Milpitas, California 95035
A Joint Venture

KAL KRISHNAN CONSULTING SERVICES
300 LAKESIDE DRIVE, SUITE #220
OAKLAND, CA 94612

Lockwood, Andrews & Newnam, Inc. A LEO A DALY COMPANY
T·Y·LIN INTERNATIONAL

SUBMITTED _____
APPROVED _____

VTA BART SILICON VALLEY
BART SILICON VALLEY BERRYESSA EXTENSION

LINE, TRACK, STATIONS AND SYSTEMS
DESIGN UNIT 023
MILPITAS STATION
DRAINAGE DETAILS—MISCELLANEOUS

SHEET 2 OF 3

CADD FILENAME C700-S-DB-C221.dwg
SIZE D | SCALE NONE
CONTRACT NO. C700 | REV. 0
AREA CODE DB | SHEET NO. C221 | PAGE NO. 0051

judy Jun 26, 2013 – 3:23pm M:\OC PROJECTS\SVBX\5.0 Deliverables\5.2 Drawings\Milpitas Station\Civil\C700-S-DB-C221.dwg

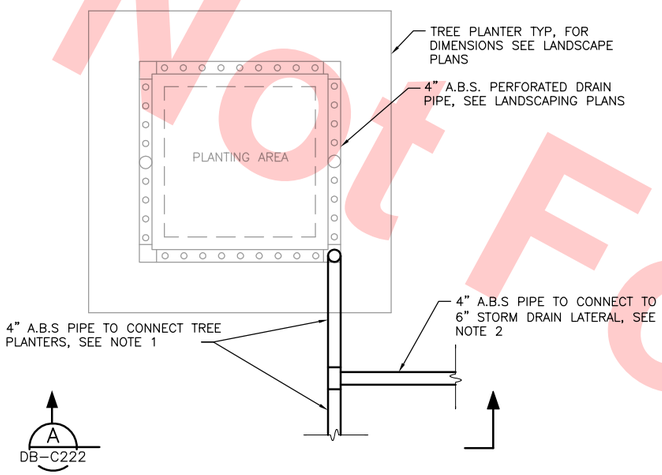

DETAIL 1 (DB-C222)
SCALE: NTS
DB-C200
DB-C202
DB-C203

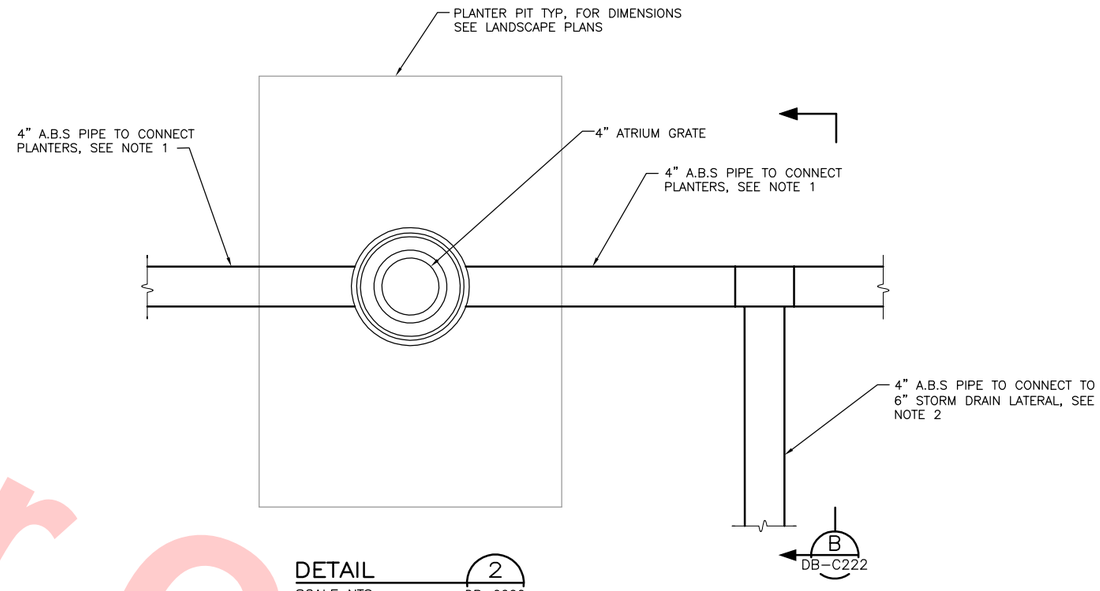

DETAIL 2 (DB-C222)
SCALE: NTS
DB-C200
DB-C202

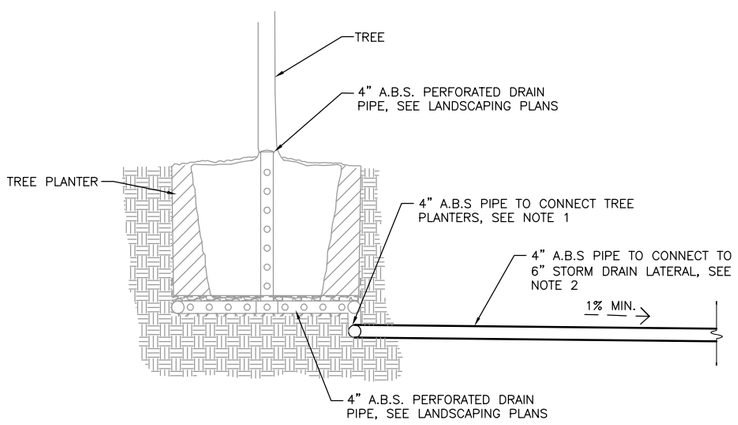

TREE PLANTER DRAIN DETAIL (A, DB-C222)
SCALE: NTS

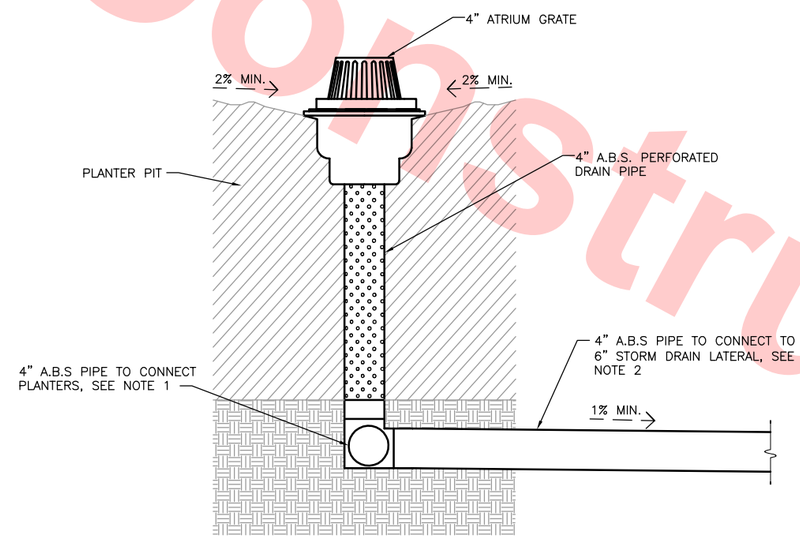

PLANTER AREA DRAIN DETAIL (B, DB-C222)
SCALE: NTS

NOTES

1. PROVIDE 4" A.B.S. PIPE AT 1% MINIMUM SLOPE FOR POSITIVE DRAINAGE. FOR INTERCONNECT LOCATIONS SEE DRAINAGE PLANS.
2. PROVIDE 4" A.B.S. PIPE AND CONNECT TO 6" STORM DRAIN LATERAL LOCATION AS SHOWN IN DRAINAGE PLANS.

Santa Clara Valley Transportation Authority

____NO EXCEPTIONS TAKEN (NET)
____MAKE CORRECTIONS NOTED (MCN)
____AMEND AND RESUBMIT (A/R)

Any action shown above is subject to the terms of the contract and does not relieve the Contractor of any of its obligations under the contract, including design and detailing.

Contract No.: DB11002F

By: _____ Date: _____

Not For Construction

REV	DATE	BY	SUB	APP	DESCRIPTION
0	20130710				READINESS FOR CONSTRUCTION

DESIGNED BY C. O'GARA
DRAWN BY C. O'GARA
CHECKED BY J. WU
IN CHARGE J. JI
DATE 20130710

REGISTERED PROFESSIONAL ENGINEER JUN JI No. C 72794 Exp. 06/30/14 CIVIL STATE OF CALIFORNIA

Skanska Shimmick Herzog
1436 California Circle Milpitas, California 95035
A Joint Venture

KAL KRISHNAN CONSULTING SERVICES
300 LAKESIDE DRIVE, SUITE #220 OAKLAND, CA 94612
SUBMITTED

Lockwood, Andrews & Newnam, Inc. A LEO A DALY COMPANY
T·Y·LIN INTERNATIONAL
APPROVED

VTA BART SILICON VALLEY
BART SILICON VALLEY BERRYESSA EXTENSION

LINE, TRACK, STATIONS AND SYSTEMS
DESIGN UNIT 023
MILPITAS STATION
DRAINAGE DETAILS–MISCELLANEOUS

SHEET 3 OF 3

CADD FILENAME C700-S-DB-C222.dwg
SIZE D | SCALE NONE
CONTRACT NO. C700 | REV. 0
AREA CODE DB | SHEET NO. C222 | PAGE NO. 0052

Jun 26, 2013 – 3:24pm M:\OC PROJECTS\SVBX\5.0 Deliverables\5.2 Drawings\Milpitas Station\Civil\C700-S-DB-C222.dwg
jjudy

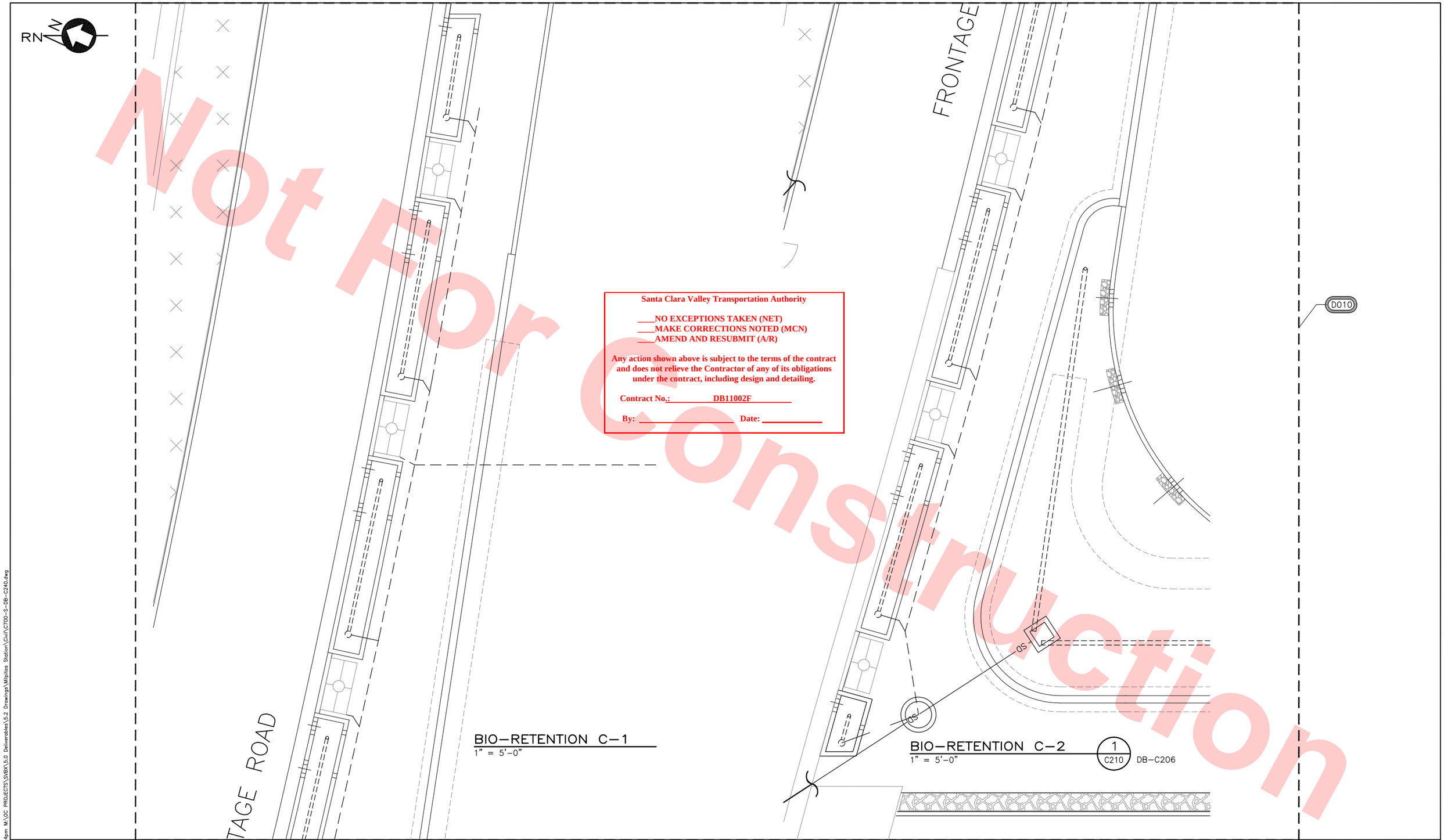

Santa Clara Valley Transportation Authority

____NO EXCEPTIONS TAKEN (NET)
____MAKE CORRECTIONS NOTED (MCN)
____AMEND AND RESUBMIT (A/R)

Any action shown above is subject to the terms of the contract and does not relieve the Contractor of any of its obligations under the contract, including design and detailing.

Contract No.: DB11002F

By: _____ Date: _____

Not For Construction

REV	DATE	BY	SUB	APP	DESCRIPTION
0	20130710				READINESS FOR CONSTRUCTION

DESIGNED BY J. WU
DRAWN BY J. WU
CHECKED BY J. JI
IN CHARGE J. JI
DATE 20130710

REGISTERED PROFESSIONAL ENGINEER JUN JI No. C 72794 Exp. 06/30/14 CIVIL STATE OF CALIFORNIA

Skanska Shimmick Herzog
1436 California Circle
Milpitas, California 95035
A Joint Venture

KAL KRISHNAN CONSULTING SERVICES
300 LAKESIDE DRIVE, SUITE #220
OAKLAND, CA 94612
SUBMITTED

Lockwood, Andrews & Newnam, Inc. A LEO A DALY COMPANY
T·Y·LIN INTERNATIONAL
APPROVED

VTA BART SILICON VALLEY
BART SILICON VALLEY BERRYESSA EXTENSION

LINE, TRACK, STATIONS AND SYSTEMS
DESIGN UNIT 023
MILPITAS STATION
DRAINAGE DETAILS–BIO–RETENTION C

SHEET 1 OF 2

CADD FILENAME C700–S–DB–C240.dwg
SIZE D | SCALE AS NOTED
CONTRACT NO. C700 | REV. 0
AREA CODE DB | SHEET NO. C240 | PAGE NO. 0053

judy Jun 26, 2013 – 3:14pm M:\OC PROJECTS\SVBX\5.0 Deliverables\5.2 Drawings\Milpitas Station\Civil\C700–S–DB–C240.dwg

RN

SPACE RESERVED FOR CROSS SECTIONS AND DETAILS OF BIO-RETENTION C

D010

Santa Clara Valley Transportation Authority

____NO EXCEPTIONS TAKEN (NET)
____MAKE CORRECTIONS NOTED (MCN)
____AMEND AND RESUBMIT (A/R)

Any action shown above is subject to the terms of the contract and does not relieve the Contractor of any of its obligations under the contract, including design and detailing.

Contract No.: DB11002F

By: _____ Date: _____

Not For Construction

REV	DATE	BY	SUB	APP	DESCRIPTION
0	20130710				READINESS FOR CONSTRUCTION

DESIGNED BY J. WU
DRAWN BY J. WU
CHECKED BY J. JI
IN CHARGE J. JI
DATE 20130710

REGISTERED PROFESSIONAL ENGINEER JUN JI No. C 72794 Exp. 06/30/14 CIVIL STATE OF CALIFORNIA

Skanska Shimmick Herzog
1436 California Circle
Milpitas, California 95035
A Joint Venture

KAL KRISHNAN CONSULTING SERVICES
300 LAKESIDE DRIVE, SUITE #220
OAKLAND, CA 94612
SUBMITTED

Lockwood, Andrews & Newnam, Inc. A CH2M HILL COMPANY
T·Y·LIN INTERNATIONAL
APPROVED

VTA BART SILICON VALLEY
BART SILICON VALLEY BERRYESSA EXTENSION

LINE, TRACK, STATIONS AND SYSTEMS
DESIGN UNIT 023
MILPITAS STATION
DRAINAGE DETAILS–BIO–RETENTION C

SHEET 2 OF 2

CADD FILENAME C700–S–DB–C241.dwg
SIZE D | SCALE AS NOTED
CONTRACT NO. C700 | REV. 0
AREA CODE DB | SHEET NO. C241 | PAGE NO. 0054

Jun 26, 2013 – 2:57pm M:\OC PROJECTS\SVBX\5.0 Deliverables\5.2 Drawings\Milpitas Station\Civil\C700-S-DB-C241.dwg
judy

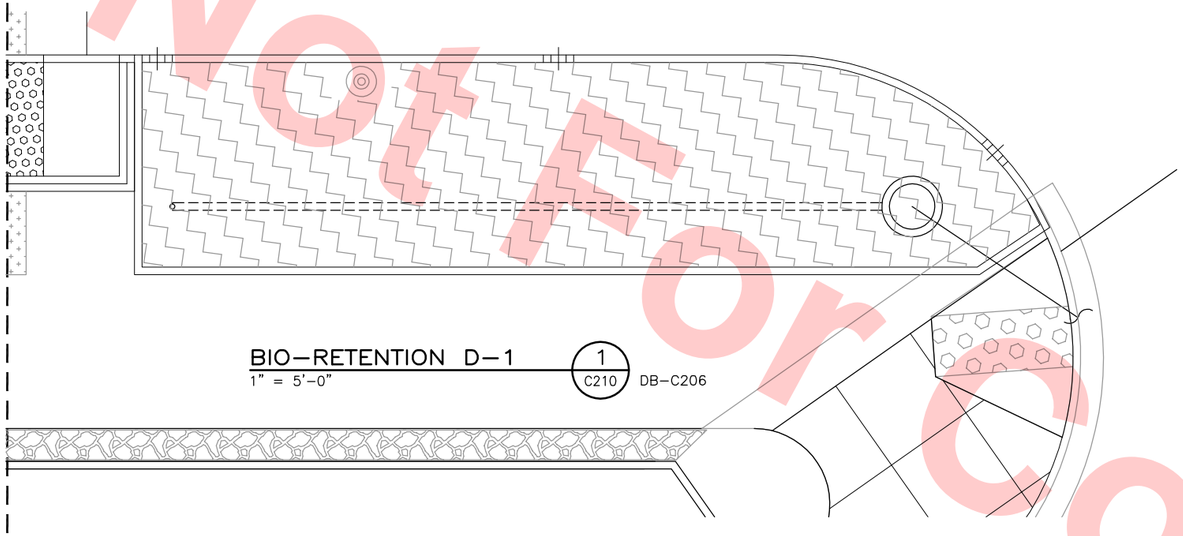

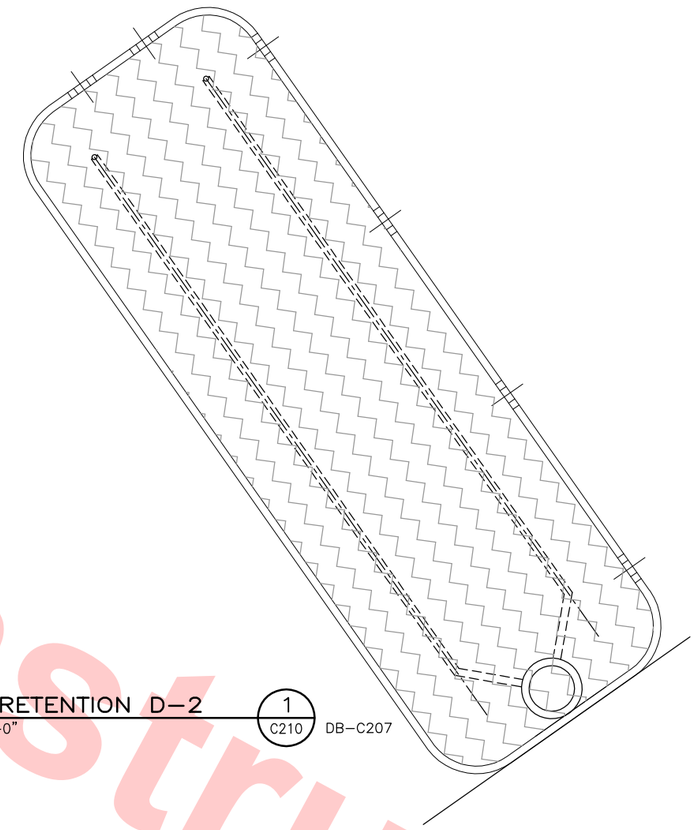

D010

Not For Construction

Santa Clara Valley Transportation Authority

____NO EXCEPTIONS TAKEN (NET)
____MAKE CORRECTIONS NOTED (MCN)
____AMEND AND RESUBMIT (A/R)

Any action shown above is subject to the terms of the contract and does not relieve the Contractor of any of its obligations under the contract, including design and detailing.

Contract No.: DB11002F

By: _____ Date: _____

REV	DATE	BY	SUB	APP	DESCRIPTION
0	20130710				READINESS FOR CONSTRUCTION

DESIGNED BY J. WU
DRAWN BY J. WU
CHECKED BY J. JI
IN CHARGE J. JI
DATE 20130710

REGISTERED PROFESSIONAL ENGINEER JUN JI No. C 72794 Exp. 06/30/14 CIVIL STATE OF CALIFORNIA

Skanska Shimmick Herzog
1436 California Circle
Milpitas, California 95035
A Joint Venture

KAL KRISHNAN CONSULTING SERVICES
300 LAKESIDE DRIVE, SUITE #220
OAKLAND, CA 94612

SUBMITTED _____

Lockwood, Andrews & Newnam, Inc. A LEO A DALY COMPANY
T·Y·LIN INTERNATIONAL

APPROVED _____

VTA BART SILICON VALLEY
BART SILICON VALLEY BERRYESSA EXTENSION

LINE, TRACK, STATIONS AND SYSTEMS
DESIGN UNIT 023
MILPITAS STATION
DRAINAGE DETAILS–BIO–RETENTION D

SHEET 1 OF 2

CADD FILENAME C700–S–DB–C242.dwg
SIZE D | SCALE AS NOTED
CONTRACT NO. C700 | REV. 0
AREA CODE DB | SHEET NO. C242 | PAGE NO. 0055

Jun 26, 2013 – 3:09pm M:\OC PROJECTS\SVBX\5.0 Deliverables\5.2 Drawings\Milpitas Station\Civil\C700-S-DB-C242.dwg
jiudy

RN

SPACE RESERVED FOR CROSS SECTIONS AND DETAILS OF BIO-RETENTION D

D010

Santa Clara Valley Transportation Authority

____NO EXCEPTIONS TAKEN (NET)
____MAKE CORRECTIONS NOTED (MCN)
____AMEND AND RESUBMIT (A/R)

Any action shown above is subject to the terms of the contract and does not relieve the Contractor of any of its obligations under the contract, including design and detailing.

Contract No.: DB11002F

By: _____ Date: _____

Not For Construction

REV	DATE	BY	SUB	APP	DESCRIPTION
0	20130710				READINESS FOR CONSTRUCTION

DESIGNED BY J. WU
DRAWN BY J. WU
CHECKED BY J. JI
IN CHARGE J. JI
DATE 20130710

REGISTERED PROFESSIONAL ENGINEER JUN JI No. C 72794 Exp. 06/30/14 CIVIL STATE OF CALIFORNIA

Skanska Shimmick Herzog
1436 California Circle
Milpitas, California 95035
A Joint Venture

KAL KRISHNAN CONSULTING SERVICES
300 LAKESIDE DRIVE, SUITE #220
OAKLAND, CA 94612

SUBMITTED _____

Lockwood, Andrews & Newnam, Inc. A CH2M HILL COMPANY
T·Y·LIN INTERNATIONAL

APPROVED _____

VTA BART SILICON VALLEY

BART SILICON VALLEY BERRYESSA EXTENSION

LINE, TRACK, STATIONS AND SYSTEMS
DESIGN UNIT 023
MILPITAS STATION
DRAINAGE DETAILS–BIO–RETENTION D

SHEET 2 OF 2

CADD FILENAME C700–S–DB–C243.dwg
SIZE D | SCALE AS NOTED
CONTRACT NO. C700 | REV. 0
AREA CODE DB | SHEET NO. C243 | PAGE NO. 0056

Jun 26, 2013 – 2:58pm M:\QC PROJECTS\SVBX\5.0 Deliverables\5.2 Drawings\Milpitas Station\Civil\C700-S-DB-C243.dwg

NOTE:

MANHOLE RIM ELEVATIONS ARE APPROXIMATE AND SHALL BE ADJUSTED TO MATCH FINISHED GRADE.

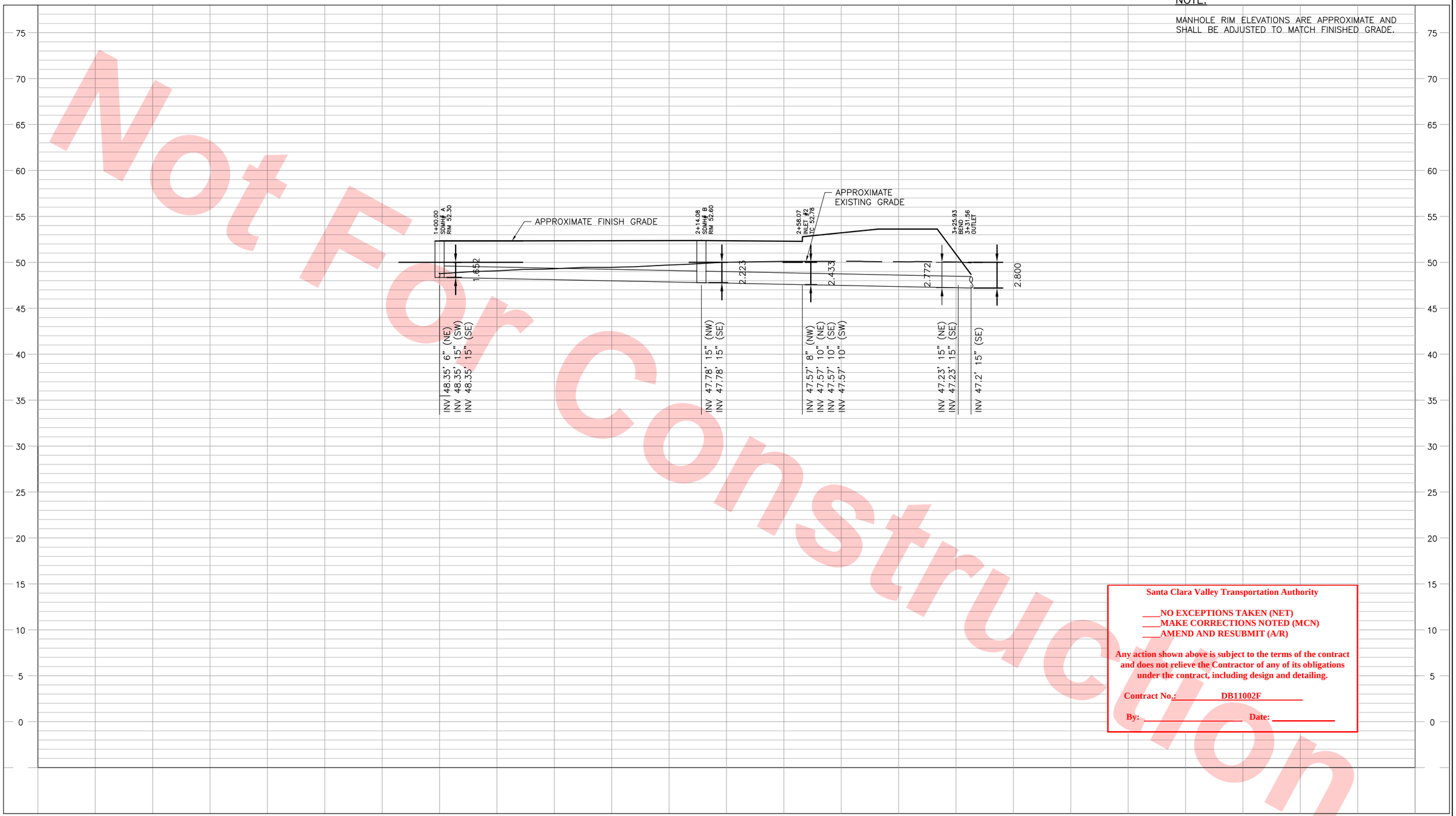

PROFILE: SD–SITE1

Not For Construction

Santa Clara Valley Transportation Authority

____NO EXCEPTIONS TAKEN (NET)
____MAKE CORRECTIONS NOTED (MCN)
____AMEND AND RESUBMIT (A/R)

Any action shown above is subject to the terms of the contract and does not relieve the Contractor of any of its obligations under the contract, including design and detailing.

Contract No.: DB11002F

By: _____ **Date:** _____

REV	DATE	BY	SUB	APP	DESCRIPTION
0	20130710				READINESS FOR CONSTRUCTION

DESIGNED BY J. WU
DRAWN BY J. WU
CHECKED BY J. JI
IN CHARGE J. JI
DATE 20130710

REGISTERED PROFESSIONAL ENGINEER JUN JI No. C 72794 Exp. 06/30/14 CIVIL STATE OF CALIFORNIA

Skanska Shimmick Herzog
1436 California Circle
Milpitas, California 95035
A Joint Venture

KAL KRISHNAN CONSULTING SERVICES
300 LAKESIDE DRIVE, SUITE #220
OAKLAND, CA 94612

SUBMITTED _____

Lockwood, Andrews & Newnam, Inc. A CH2M HILL COMPANY
T·Y·LIN INTERNATIONAL

APPROVED _____

NOT FOR CONSTRUCTION

VTA BART SILICON VALLEY
BART SILICON VALLEY BERRYESSA EXTENSION

LINE, TRACK, STATIONS AND SYSTEMS
DESIGN UNIT 023
MILPITAS STATION
PROFILE

CADD FILENAME C700–S–DB–C250.dwg
SIZE D | SCALE 1"=20' H; 1"=5' V
CONTRACT NO. C700 | REV. 0
AREA CODE DB | SHEET NO. C250 | PAGE NO. 0057

Jun 26, 2013 – 3:44pm M:\QC PROJECTS\SVBX\5.0 Deliverables\5.2 Drawings\Milpitas Station\Civil\C700-S-DB-C250.dwg
jjudy

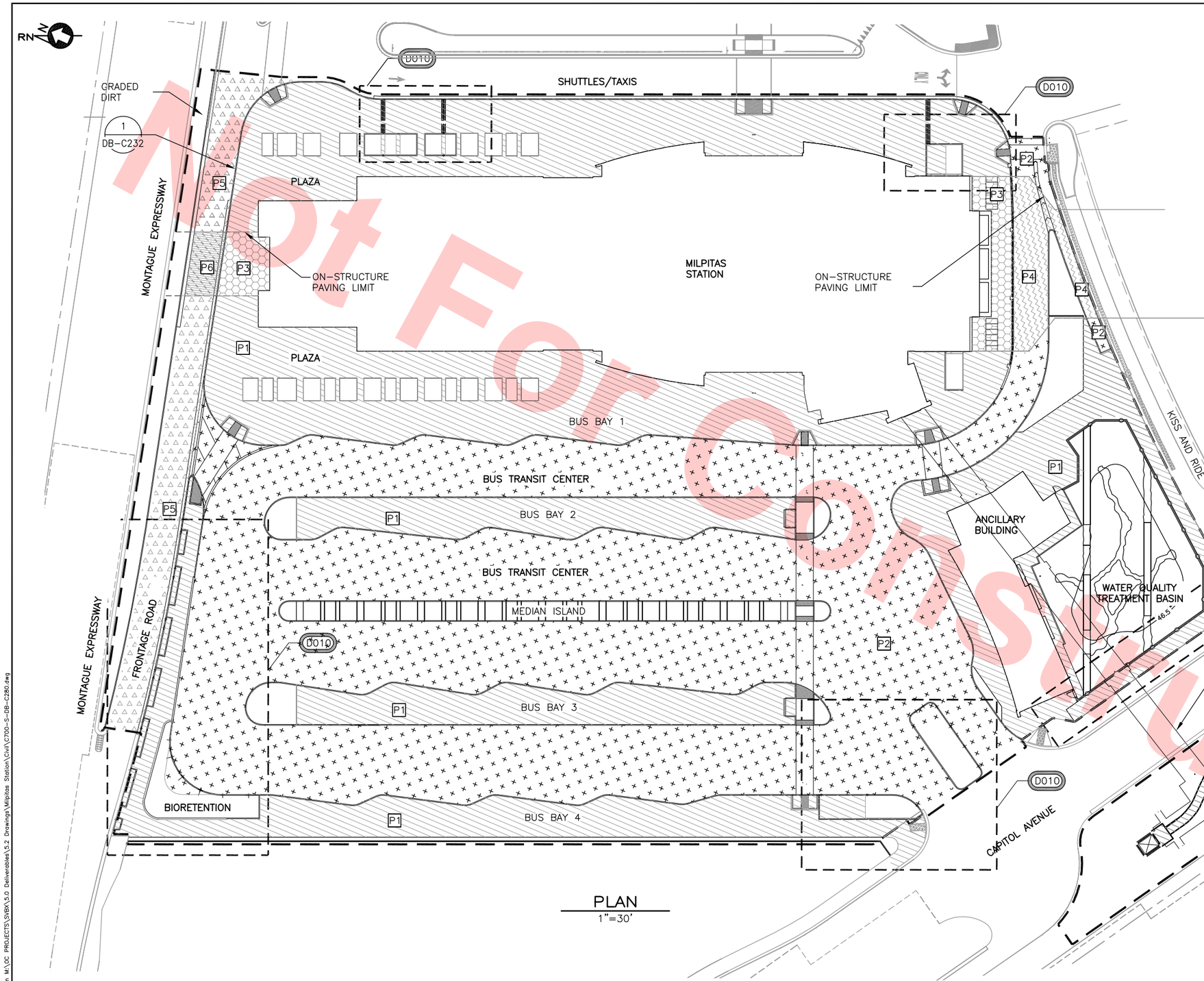

PLAN
1"=30'

PAVING LEGEND

SYMBOL	DESCRIPTION	THICKNESS SG	THICKNESS AB	THICKNESS PCC/AC	DETAIL
P1	PEDESTRIAN PCC ON-GRADE	SEE DETAIL	4"	4" MIN PCC	4 DB-C282
P2	VEHICULAR PCC ON-GRADE	SEE DETAIL	1'	0.75' JPCP	3 DB-C282
P3	PEDESTRIAN PCC ON STRUCTURE		VARIES	4" MIN PCC	8 DB-C283
P4	VEHICULAR PCC ON STRUCTURE			0.5' MIN JPCP	7 DB-C283
P5	VEHICULAR AC ON-GRADE	0.8'	0.75'	0.45' AC	5 DB-C283
P6	VEHICULAR AC ON STRUCTURE		VARIES	0.5' MIN AC	6 DB-C283

NOTE:
1. HATCH PATTERNS APPLY TO THIS SHEET ONLY.
2. SEE DB-C120~DB-C123 FOR TREE GRATE LOCATIONS.
3. REPLACE PAVEMENT WITH SOIL AT TREE GRATES LOCATIONS. SOIL PER LANDSCAPE DWGS.

Santa Clara Valley Transportation Authority

____NO EXCEPTIONS TAKEN (NET)
____MAKE CORRECTIONS NOTED (MCN)
____AMEND AND RESUBMIT (A/R)

Any action shown above is subject to the terms of the contract and does not relieve the Contractor of any of its obligations under the contract, including design and detailing.

Contract No.: DB11002F

By: _____ Date: _____

KEY PLAN

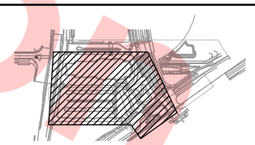

Not For Construction

REV	DATE	BY	SUB	APP	DESCRIPTION
0	20130710				READINESS FOR CONSTRUCTION

DESIGNED BY C. LU
DRAWN BY C. LU
CHECKED BY H. SHI
IN CHARGE J. JI
DATE 20130710

REGISTERED PROFESSIONAL ENGINEER JUN JI No. C 72794 Exp. 06/30/14 CIVIL STATE OF CALIFORNIA

Skanska Shimmick Herzog
1436 California Circle Milpitas, California 95035
A Joint Venture

KAL KRISHNAN CONSULTING SERVICES
300 LAKESIDE DRIVE, SUITE #220 OAKLAND, CA 94612

Lockwood, Andrews & Newnam, Inc. A LEO A DALY COMPANY
T·Y·LIN INTERNATIONAL

SUBMITTED _____
APPROVED _____

VTA BART SILICON VALLEY
BART SILICON VALLEY BERRYESSA EXTENSION

LINE, TRACK, STATIONS AND SYSTEMS
DESIGN UNIT 023
MILPITAS STATION
PAVEMENT PLAN

SHEET 1 OF 2

CADD FILENAME C700-S-DB-C280.dwg
SIZE D | SCALE 1"=30'
CONTRACT NO. C700 | REV. 0
AREA CODE DB | SHEET NO. C280 | PAGE NO. 0058

judy Jun 27, 2013 - 1:07pm M:\OC PROJECTS\SVBX\5.0 Deliverables\5.2 Drawings\Milpitas Station\Civil\C700-S-DB-C280.dwg

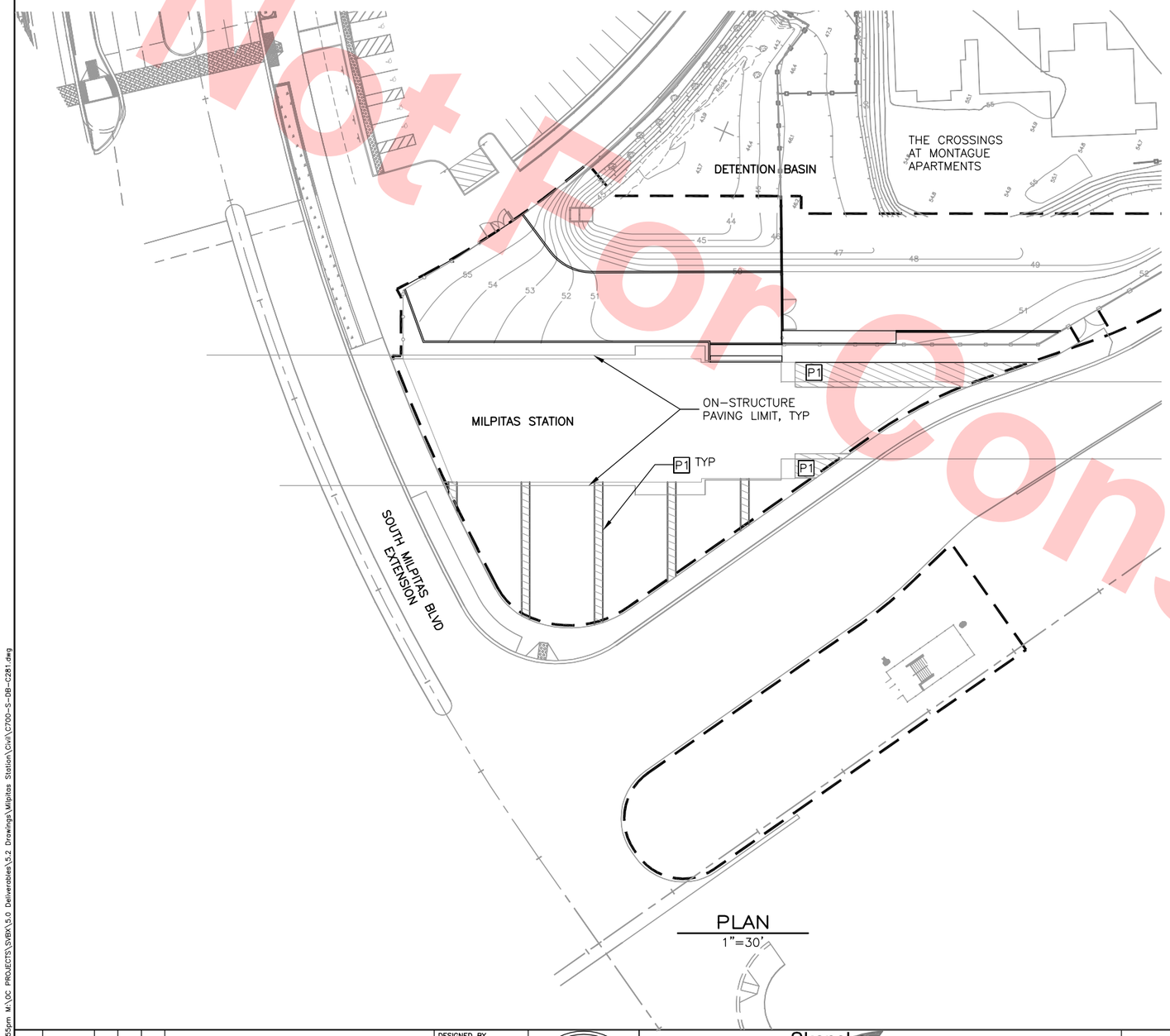

PLAN
1"=30'

PAVING LEGEND

SYMBOL		DESCRIPTION	THICKNESS SG	THICKNESS AB	THICKNESS PCC/AC	DETAIL
P1		PEDESTRIAN PCC ON-GRADE	SEE DETAIL	4"	4" MIN PCC	4 DB-C282
P2		VEHICULAR PCC ON-GRADE	SEE DETAIL	1'	0.75' JPCP	3 DB-C282
P3		PEDESTRIAN PCC ON STRUCTURE		VARIES	4" MIN PCC	8 DB-C283
P4		VEHICULAR PCC ON STRUCTURE			0.5' MIN JPCP	7 DB-C283
P5		VEHICULAR AC ON-GRADE	0.8'	0.75'	0.45' AC	5 DB-C283
P6		VEHICULAR AC ON STRUCTURE		VARIES	0.5' MIN AC	6 DB-C283

NOTE: HATCH PATTERNS APPLY TO THIS SHEET ONLY.

Santa Clara Valley Transportation Authority

____NO EXCEPTIONS TAKEN (NET)
____MAKE CORRECTIONS NOTED (MCN)
____AMEND AND RESUBMIT (A/R)

Any action shown above is subject to the terms of the contract and does not relieve the Contractor of any of its obligations under the contract, including design and detailing.

Contract No.: DB11002F

By: _____ Date: _____

KEY PLAN

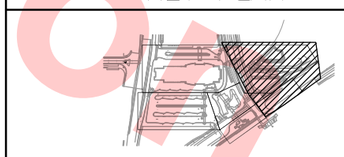

Not For Construction

REV	DATE	BY	SUB	APP	DESCRIPTION
0	20130710				READINESS FOR CONSTRUCTION

DESIGNED BY C. LU
DRAWN BY C. LU
CHECKED BY H. SHI
IN CHARGE J. JI
DATE 20130710

REGISTERED PROFESSIONAL ENGINEER JUN JI No. C 72794 Exp. 06/30/14 CIVIL STATE OF CALIFORNIA

Skanska Shimmick Herzog
1436 California Circle
Milpitas, California 95035
A Joint Venture

KAL KRISHNAN CONSULTING SERVICES
300 LAKESIDE DRIVE, SUITE #220
OAKLAND, CA 94612

SUBMITTED

Lockwood, Andrews & Newnam, Inc. A LEO A DALY COMPANY
T·Y·LIN INTERNATIONAL

APPROVED

VTA BART SILICON VALLEY
BART SILICON VALLEY BERRYESSA EXTENSION

LINE, TRACK, STATIONS AND SYSTEMS
DESIGN UNIT 023
MILPITAS STATION
PAVEMENT PLAN

SHEET 2 OF 2

CADD FILENAME C700-S-DB-C281.dwg
SIZE D | SCALE 1"=30'
CONTRACT NO. C700 | REV. 0
AREA CODE DB | SHEET NO. C281 | PAGE NO. 0059

judy Jul 09, 2013 – 1:55pm M:\OC PROJECTS\SVBX\5.0 Deliverables\5.2 Drawings\Milpitas Station\Civil\C700-S-DB-C281.dwg

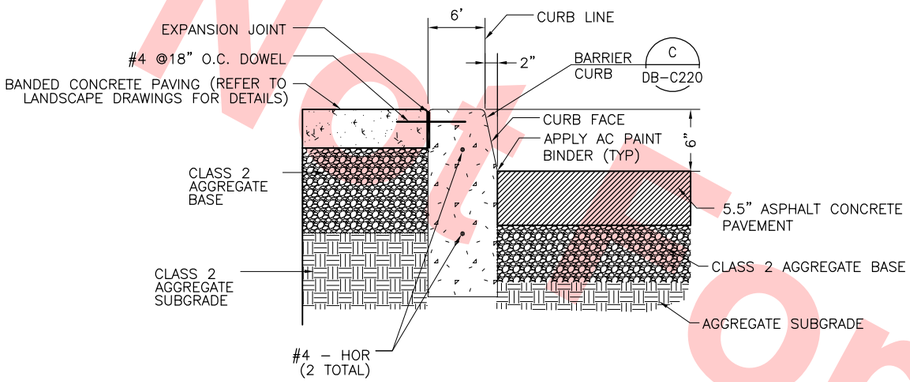

DETAIL– VERTICAL CURB (ON–GRADE) 1 C282 C280

1 1/2" = 1'–0"

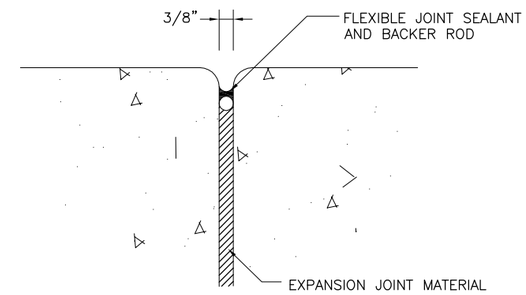

EXPANSION JOINT 5 C282

6" = 1'–0"

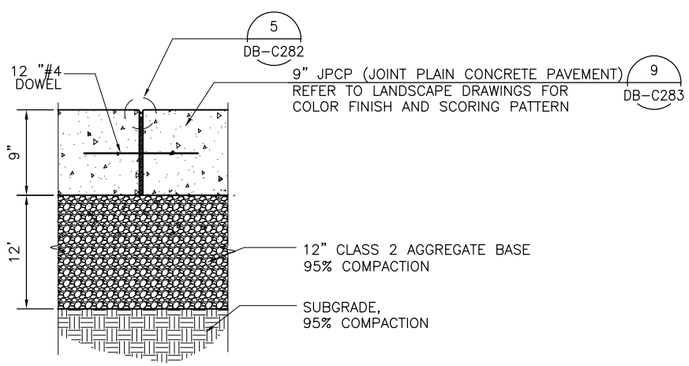

DETAIL– VEHICULAR PCC PAVING (ON–GRADE) 3 C282

1 1/2" = 1'–0"

PAVING TYPE P2

(TABLE IN DB–C280 & C281)

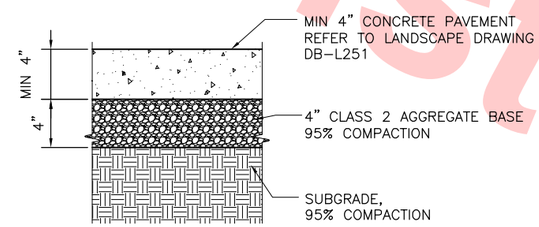

DETAIL– PEDESTRIAN PCC PAVING (ON–GRADE) 4 C282

1 1/2" = 1'–0"

PAVING TYPE P1

(TABLE IN DB–C280 & C281)

Santa Clara Valley Transportation Authority

____NO EXCEPTIONS TAKEN (NET)
____MAKE CORRECTIONS NOTED (MCN)
____AMEND AND RESUBMIT (A/R)

Any action shown above is subject to the terms of the contract and does not relieve the Contractor of any of its obligations under the contract, including design and detailing.

Contract No.: DB11002F

By: _____ Date: _____

Not for Construction

REV	DATE	BY	SUB	APP	DESCRIPTION
0	20130710				READINESS FOR CONSTRUCTION

DESIGNED BY C. LU
DRAWN BY C. LU
CHECKED BY H. SHI
IN CHARGE J. JI
DATE 20130710

REGISTERED PROFESSIONAL ENGINEER JUN JI No. C 72794 Exp. 06/30/14 CIVIL STATE OF CALIFORNIA

Skanska Shimmick Herzog
1436 California Circle
Milpitas, California 95035
A Joint Venture

KAL KRISHNAN CONSULTING SERVICES
300 LAKESIDE DRIVE, SUITE #220
OAKLAND, CA 94612

SUBMITTED

Lockwood, Andrews & Newnam, Inc. A CH2M HILL COMPANY
T-Y-LIN INTERNATIONAL

APPROVED

VTA BART SILICON VALLEY

BART SILICON VALLEY BERRYESSA EXTENSION

LINE, TRACK, STATIONS AND SYSTEMS
DESIGN UNIT 023
MILPITAS STATION
PAVEMENT DETAILS

SHEET 1 OF 2

CADD FILENAME C700–S–DB–C282.dwg
SIZE D
SCALE AS NOTED
CONTRACT NO. C700
REV. 0
AREA CODE DB
SHEET NO. C282
PAGE NO. 0060

Jun 26, 2013 – 4:21pm M:\OC PROJECTS\SVBX\5.0 Deliverables\5.2 Drawings\Milpitas Station\Civil\C700-S-DB-C282.dwg
judy

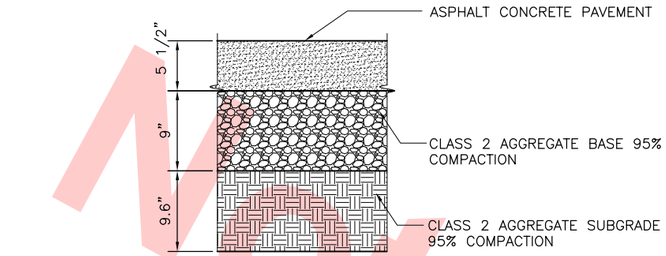

DETAIL– VEHICULAR AC PAVING (ON–GRADE) 5 C283

1 1/2" = 1'–0"

PAVING TYPE P5

(TABLE IN DB–C280 & C281)

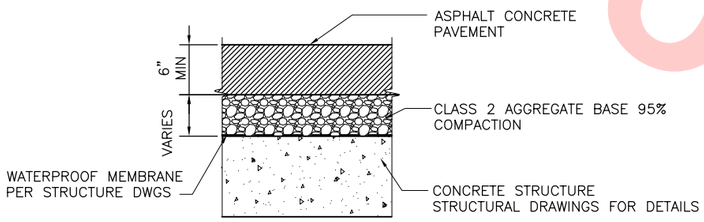

DETAIL– VEHICULAR AC PAVING (ON–STRUCTURE) 6 C283

1 1/2" = 1'–0"

PAVING TYPE P6

(TABLE IN DB–C280 & C831)

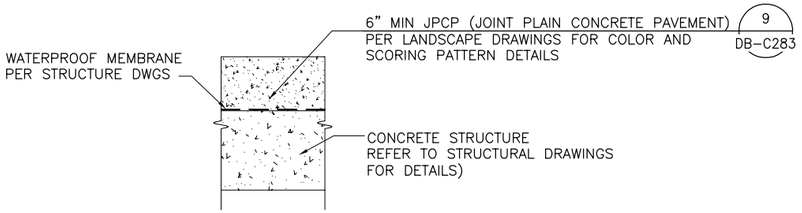

DETAIL– VEHICULAR PCC PAVING (ON–STRUCTURE) 7 C283

1 1/2" = 1'–0"

PAVING TYPE P4

(TABLE IN DB–C280 & C281)

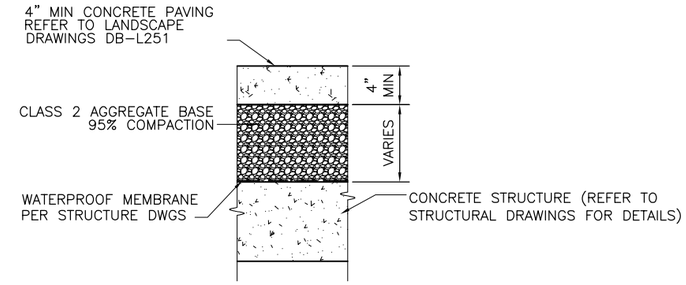

DETAIL– PEDESTRIAN PCC PAVING (ON–STRUCTURE) 8 C283

1 1/2" = 1'–0"

PAVING TYPE P3

(TABLE IN DB–C280 & C281)

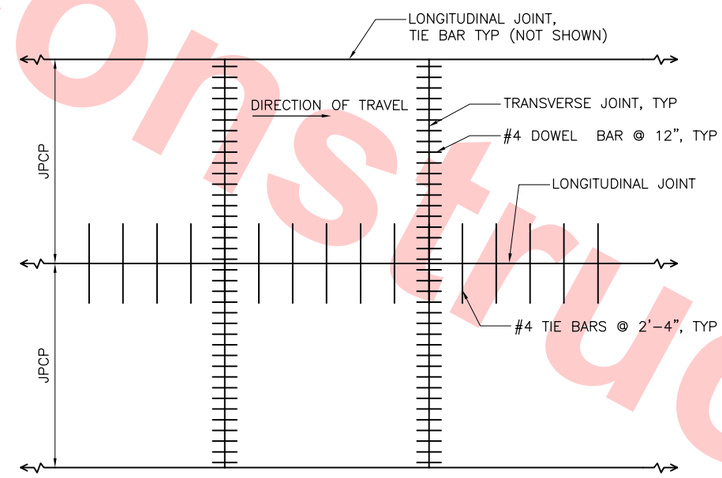

JPCP (JOINT PLAIN CONCRETE PAVEMENT) 9 C283

NTS

Santa Clara Valley Transportation Authority

____NO EXCEPTIONS TAKEN (NET)
____MAKE CORRECTIONS NOTED (MCN)
____AMEND AND RESUBMIT (A/R)

Any action shown above is subject to the terms of the contract and does not relieve the Contractor of any of its obligations under the contract, including design and detailing.

Contract No.: DB11002F

By: _____ Date: _____

Not For Construction

REV	DATE	BY	SUB	APP	DESCRIPTION
0	20130710				READINESS FOR CONSTRUCTION

DESIGNED BY C. LU
DRAWN BY C. LU
CHECKED BY H. SHI
IN CHARGE J. JI
DATE 20130710

REGISTERED PROFESSIONAL ENGINEER JUN JI No. C 72794 Exp. 06/30/14 CIVIL STATE OF CALIFORNIA

Skanska Shimmick Herzog
1436 California Circle Milpitas, California 95035
A Joint Venture

KAL KRISHNAN CONSULTING SERVICES
300 LAKESIDE DRIVE, SUITE #220 OAKLAND, CA 94612
SUBMITTED

Lockwood, Andrews & Newnam, Inc. A LEO A DALY COMPANY
T·Y·LIN INTERNATIONAL
APPROVED

VTA BART SILICON VALLEY
BART SILICON VALLEY BERRYESSA EXTENSION

LINE, TRACK, STATIONS AND SYSTEMS
DESIGN UNIT 023
MILPITAS STATION
PAVEMENT DETAILS

SHEET 2 OF 2

CADD FILENAME C700–S–DB–C283.dwg
SIZE D | SCALE AS NOTED
CONTRACT NO. C700 | REV. 0
AREA CODE DB | SHEET NO. C283 | PAGE NO. 0061

jurdy Jun 26, 2013 – 4:20pm M:\OC PROJECTS\SVBX\5.0 Deliverables\5.2 Drawings\Milpitas Station\Civil\C700-S-DB-C283.dwg

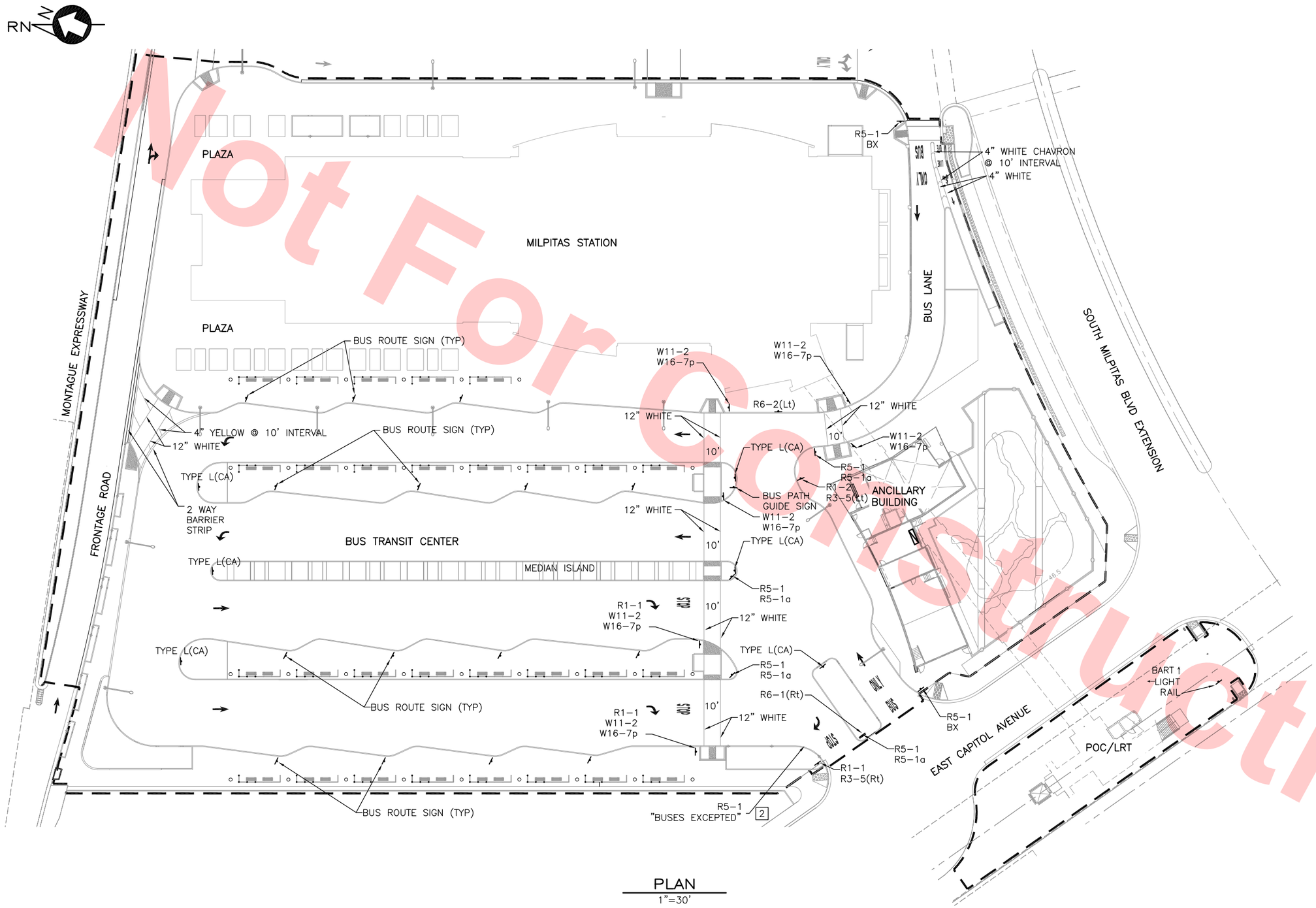

PLAN
1"=30'

Not For Construction

NOTES

NOTES

1. REFER TO OFF-SITE DWGS FOR ADDITIONAL INFORMATION.
2. ALL ONSITE CURBS TO BE PAINTED RED EXCEPT DESIGNATED PARKING AREAS AND WHERE OTHERWISE INDICATED.
3. TRAFFIC STRIPING AND MARKING, AND SIGNS SHOWN SHALL CONFORM TO THE BART FACILITIES STANDARDS– CIVIL CS20, CS21 CS65, AND THE CURRENT CALIFORNIA MANUAL ON UNIFORM TRAFFIC CONTROL DEVICES (CAMUTCD).
4. LOCATIONS OF SIGNS ARE APPROXIMATE.

Santa Clara Valley Transportation Authority

____NO EXCEPTIONS TAKEN (NET)
____MAKE CORRECTIONS NOTED (MCN)
____AMEND AND RESUBMIT (A/R)

Any action shown above is subject to the terms of the contract and does not relieve the Contractor of any of its obligations under the contract, including design and detailing.

Contract No.: DB11002F

By: _____ Date: _____

KEY PLAN

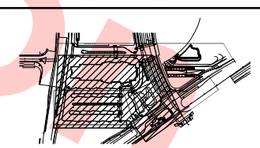

REV	DATE	BY	SUB	APP	DESCRIPTION
0	20130710				READINESS FOR CONSTRUCTION

DESIGNED BY J. CHUNG
DRAWN BY J. CHUNG
CHECKED BY J. JI
IN CHARGE J. JI
DATE 20130710

REGISTERED PROFESSIONAL ENGINEER JUN JI No. C 72794 Exp. 06/30/14 CIVIL STATE OF CALIFORNIA

Skanska Shimmick Herzog
1436 California Circle
Milpitas, California 95035
A Joint Venture

KAL KRISHNAN CONSULTING SERVICES
300 LAKESIDE DRIVE, SUITE #220
OAKLAND, CA 94612
SUBMITTED

Lockwood, Andrews & Newnam, Inc. A LAN "A" BALY COMPANY
T·Y·LIN INTERNATIONAL
APPROVED

VTA BART SILICON VALLEY
BART SILICON VALLEY BERRYESSA EXTENSION

LINE, TRACK, STATIONS AND SYSTEMS
DESIGN UNIT 023
MILPITAS STATION
SIGNAGE AND PAVEMENT MARKING PLAN

CADD FILENAME C700-S-DB-C300.dwg
SIZE D | SCALE 1" = 30'
CONTRACT NO. C700 | REV. 0
AREA CODE DB | SHEET NO. C300 | PAGE NO. 0062

Jun 26, 2013 – 4:27pm M:\QC PROJECTS\SVBX\5.0 Deliverables\5.2 Drawings\Milpitas Station\Civil\C700-S-DB-C300.dwg
jjudy

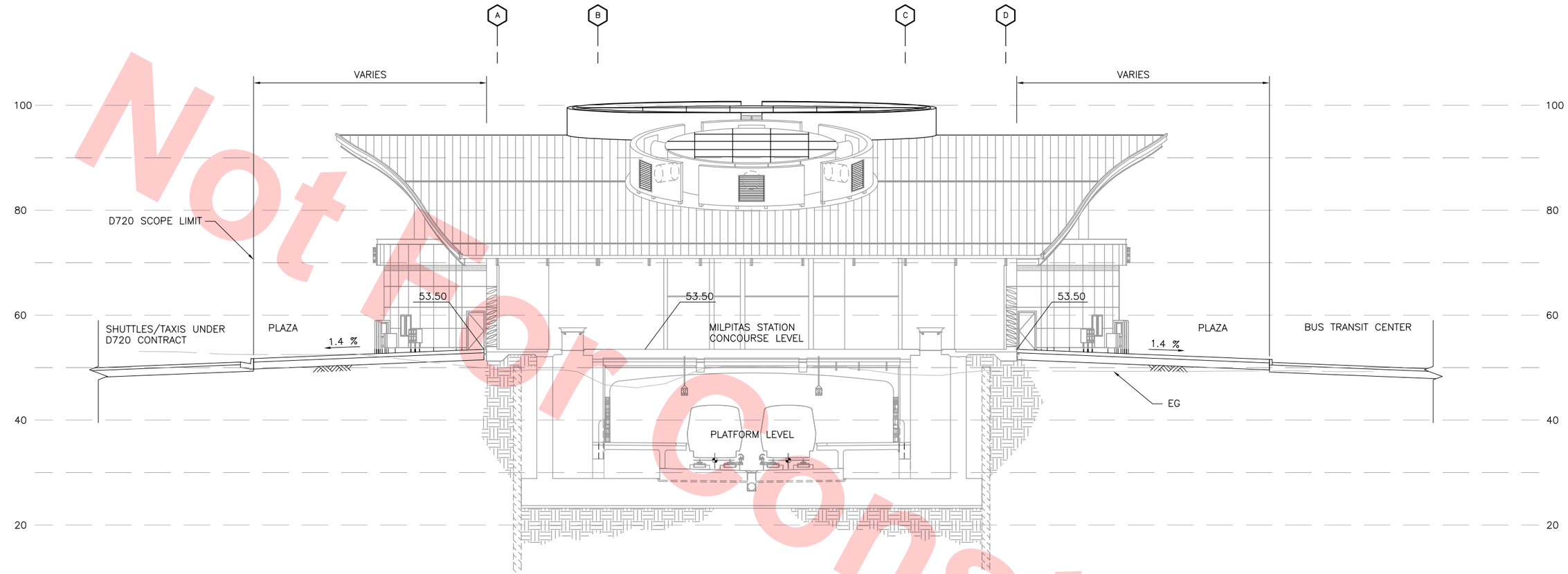

SECTION A
SCALE: 1"=10'-0" DB-C620 DB-C110

Not For Construction

Santa Clara Valley Transportation Authority

____NO EXCEPTIONS TAKEN (NET)
____MAKE CORRECTIONS NOTED (MCN)
____AMEND AND RESUBMIT (A/R)

Any action shown above is subject to the terms of the contract and does not relieve the Contractor of any of its obligations under the contract, including design and detailing.

Contract No.: DB11002F

By: _____ Date: _____

10' 0' 10' 20'
GRAPHIC SCALE

REV	DATE	BY	SUB	APP	DESCRIPTION
0	20130710				READINESS FOR CONSTRUCTION

DESIGNED BY J. WU
DRAWN BY J. WU
CHECKED BY J. JI
IN CHARGE J. JI
DATE 20130710

REGISTERED PROFESSIONAL ENGINEER JUN JI No. C 72794 Exp. 06/30/14 CIVIL STATE OF CALIFORNIA

Skanska Shimmick Herzog
1436 California Circle
Milpitas, California 95035
A Joint Venture

KAL KRISHNAN CONSULTING SERVICES
300 LAKESIDE DRIVE, SUITE #220
OAKLAND, CA 94612
SUBMITTED

Lockwood, Andrews & Newnam, Inc. A LEO A DALY COMPANY
T·Y·LIN INTERNATIONAL
APPROVED

VTA BART SILICON VALLEY
BART SILICON VALLEY BERRYESSA EXTENSION

LINE, TRACK, STATIONS AND SYSTEMS
DESIGN UNIT 023
MILPITAS STATION
TYPICAL CROSS SECTIONS

SHEET 1 OF 4

CADD FILENAME C700-S-DB-C620.dwg
SIZE D | SCALE 1"=10'
CONTRACT NO. C700 | REV. 0
AREA CODE DB | SHEET NO. C620 | PAGE NO. 0063

Jun 26, 2013 – 4:34pm M:\OC PROJECTS\SVBX\5.0 Deliverables\5.2 Drawings\Milpitas Station\Civil\C700-S-DB-C620.dwg
jiudy

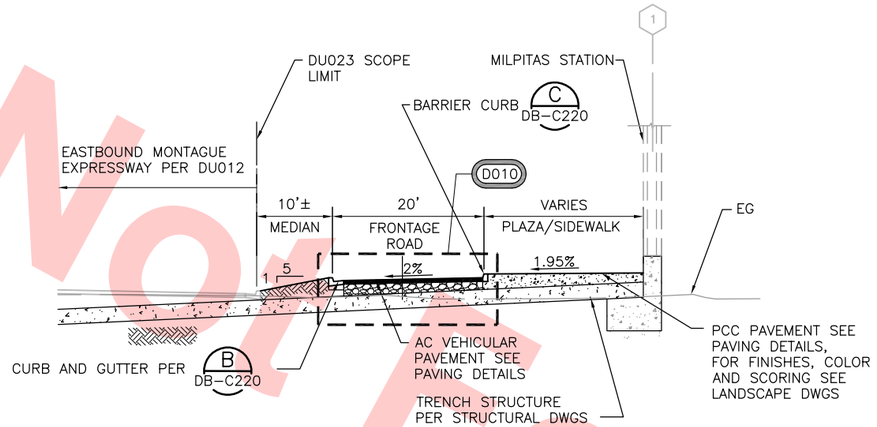

SECTION B C621 C110
SCALE: 1"=10'-0"

MILPITAS STATION

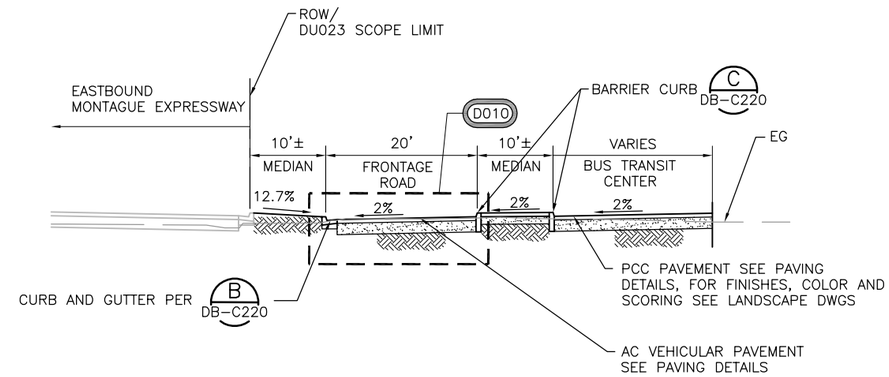

SECTION F C621 C112
SCALE: 1"=10'-0"

BUS TRANSIT CENTER

Santa Clara Valley Transportation Authority

____NO EXCEPTIONS TAKEN (NET)
____MAKE CORRECTIONS NOTED (MCN)
____AMEND AND RESUBMIT (A/R)

Any action shown above is subject to the terms of the contract and does not relieve the Contractor of any of its obligations under the contract, including design and detailing.

Contract No.: DB11002F

By: _____ Date: _____

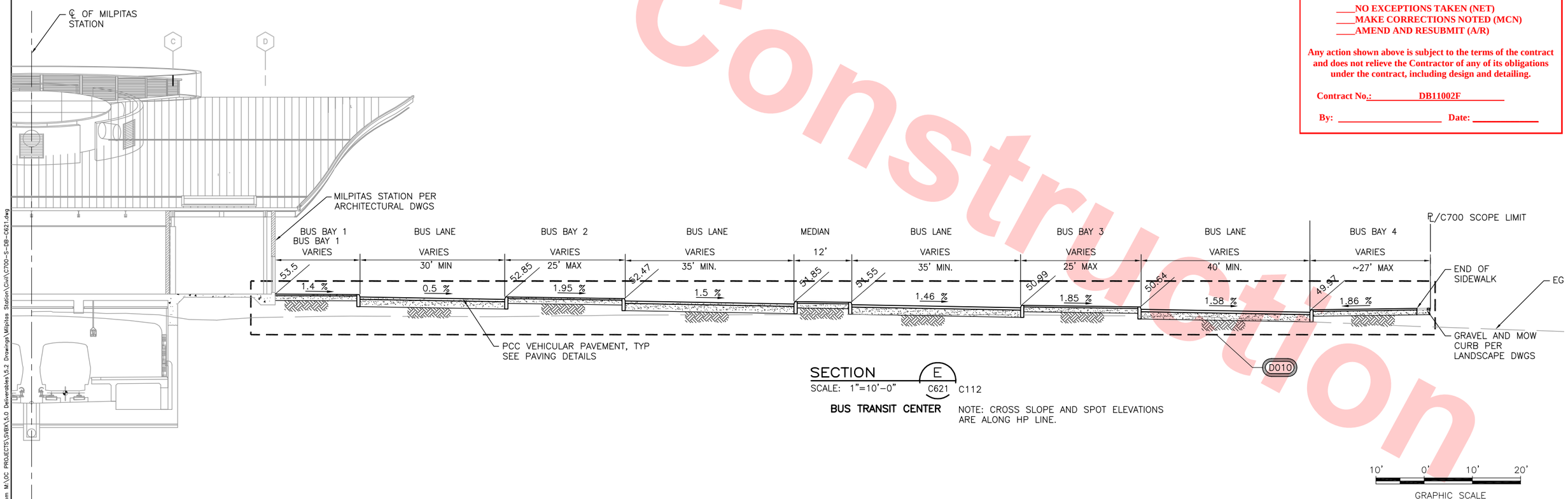

SECTION E C621 C112
SCALE: 1"=10'-0"

BUS TRANSIT CENTER

NOTE: CROSS SLOPE AND SPOT ELEVATIONS ARE ALONG HP LINE.

Not For Construction

REV	DATE	BY	SUB	APP	DESCRIPTION
0	20130710				READINESS FOR CONSTRUCTION

DESIGNED BY J. WU
DRAWN BY J. WU
CHECKED BY J. JI
IN CHARGE J. JI
DATE 20130710

REGISTERED PROFESSIONAL ENGINEER JUN JI No. C 72794 Exp. 06/30/14 CIVIL STATE OF CALIFORNIA

Skanska Shimmick Herzog
1436 California Circle
Milpitas, California 95035
A Joint Venture

KAL KRISHNAN CONSULTING SERVICES
300 LAKESIDE DRIVE, SUITE #220
OAKLAND, CA 94612

SUBMITTED

Lockwood, Andrews & Newnam, Inc. A AECOM COMPANY
T·Y·LIN INTERNATIONAL

APPROVED

VTA BART SILICON VALLEY
BART SILICON VALLEY BERRYESSA EXTENSION

LINE, TRACK, STATIONS AND SYSTEMS
DESIGN UNIT 023
MILPITAS STATION
TYPICAL CROSS SECTIONS

SHEET 2 OF 4

CADD FILENAME C700-S-DB-C621.dwg
SIZE D | SCALE 1"=10'
CONTRACT NO. C700 | REV. 0
AREA CODE DB | SHEET NO. C621 | PAGE NO. 0064

Jun 26, 2013 – 4:39pm M:\QC PROJECTS\SVBX\5.0 Deliverables\5.2 Drawings\Milpitas Station\Civil\C700-S-DB-C621.dwg

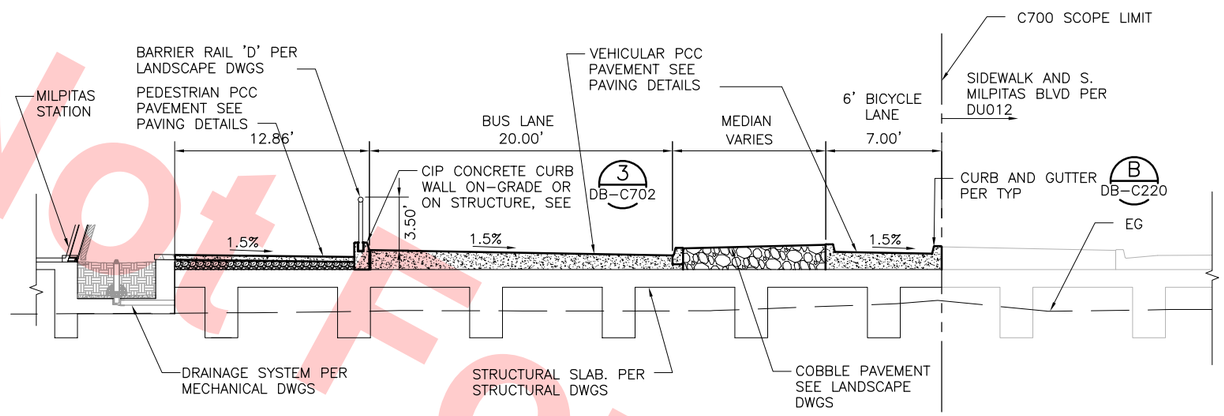

SECTION J C622 C111
1"=5'-0"

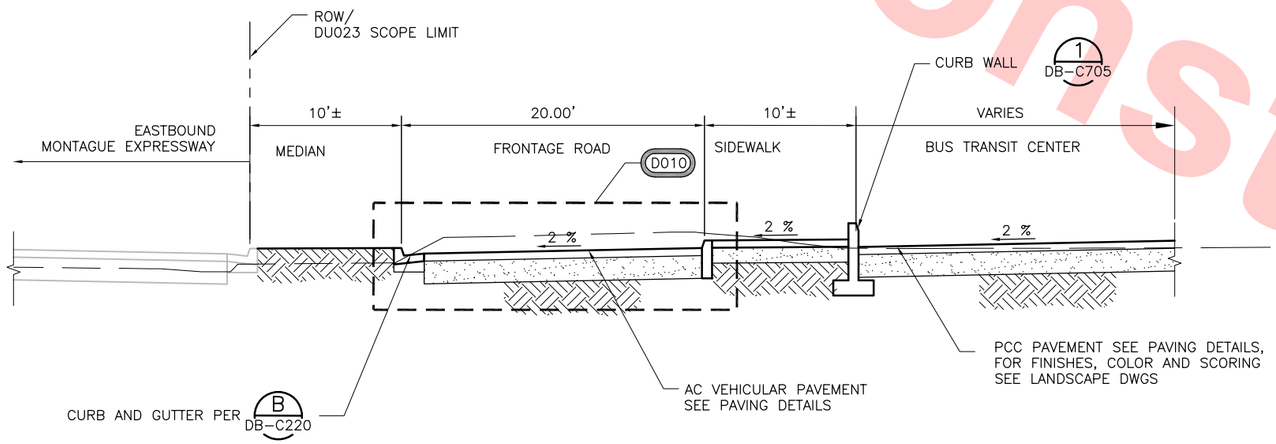

SECTION K C622 C112
1"=5'-0"

BUS TRANSIT CENTER

5' 0' 5' 10'
GRAPHIC SCALE

Santa Clara Valley Transportation Authority

____NO EXCEPTIONS TAKEN (NET)
____MAKE CORRECTIONS NOTED (MCN)
____AMEND AND RESUBMIT (A/R)

Any action shown above is subject to the terms of the contract and does not relieve the Contractor of any of its obligations under the contract, including design and detailing.

Contract No.: DB11002F

By: _____ **Date:** _____

Not For Construction

REV	DATE	BY	SUB	APP	DESCRIPTION
0	20130710				READINESS FOR CONSTRUCTION

DESIGNED BY J. WU
DRAWN BY J. WU
CHECKED BY J. JI
IN CHARGE J. JI
DATE 20130710

REGISTERED PROFESSIONAL ENGINEER JUN JI No. C 72794 Exp. 06/30/14 CIVIL STATE OF CALIFORNIA

Skanska Shimmick Herzog
1436 California Circle
Milpitas, California 95035
A Joint Venture

KAL KRISHNAN CONSULTING SERVICES
300 LAKESIDE DRIVE, SUITE #220
OAKLAND, CA 94612
SUBMITTED

Lockwood, Andrews & Newnam, Inc. A LEO A DALY COMPANY
T·Y·LIN INTERNATIONAL
APPROVED

VTA BART SILICON VALLEY
BART SILICON VALLEY BERRYESSA EXTENSION

LINE, TRACK, STATIONS AND SYSTEMS
DESIGN UNIT 023
MILPITAS STATION
TYPICAL CROSS SECTIONS

SHEET 3 OF 4

CADD FILENAME C700-S-DB-C622.dwg
SIZE D | SCALE 1"=5'
CONTRACT NO. C700 | REV. 0
AREA CODE DB | SHEET NO. C622 | PAGE NO. 0065

judy Jun 26, 2013 – 4:42pm M:\OC PROJECTS\SVBX\5.0 Deliverables\5.2 Drawings\Milpitas Station\Civil\C700-S-DB-C622.dwg

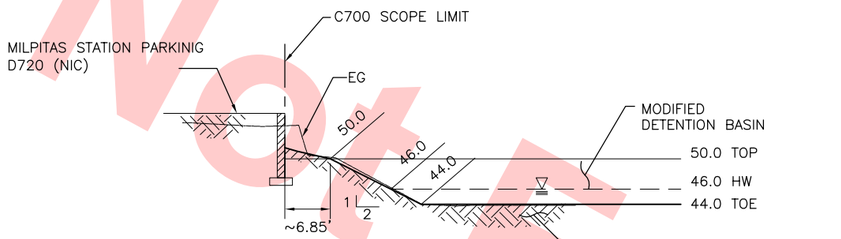

SECTION C
SCALE: 1"=10'-0" C623 C111

DETENTION BASIN AT THE CROSSINGS

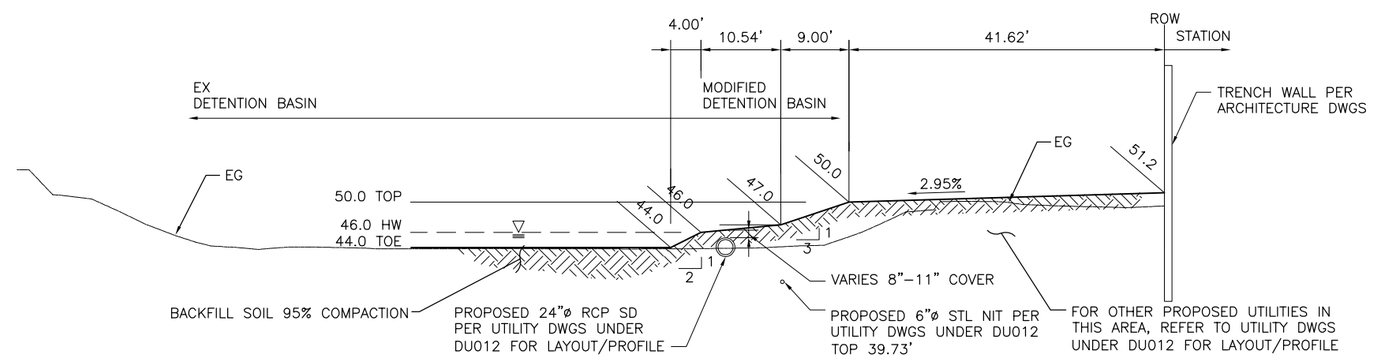

SECTION D
SCALE: 1"=10'-0" C623 C111

DETENTION BASIN AT THE CROSSINGS

D025

Santa Clara Valley Transportation Authority

____NO EXCEPTIONS TAKEN (NET)
____MAKE CORRECTIONS NOTED (MCN)
____AMEND AND RESUBMIT (A/R)

Any action shown above is subject to the terms of the contract and does not relieve the Contractor of any of its obligations under the contract, including design and detailing.

Contract No.: DB11002F

By: _____ Date: _____

D010

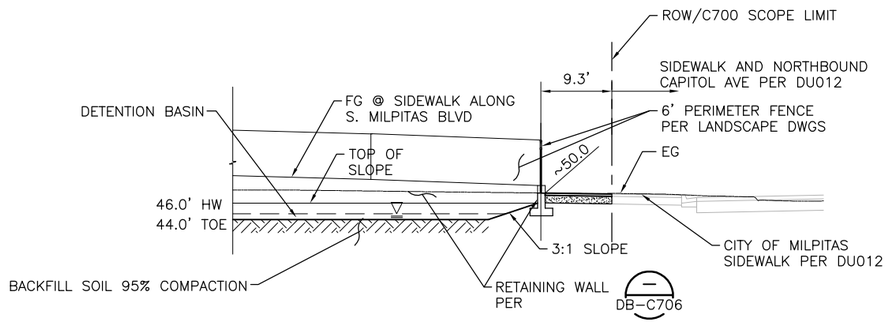

SECTION G
SCALE: 1:10' C623 C113

DETENTION BASIN AT BUS ANCILLARY BUILDING

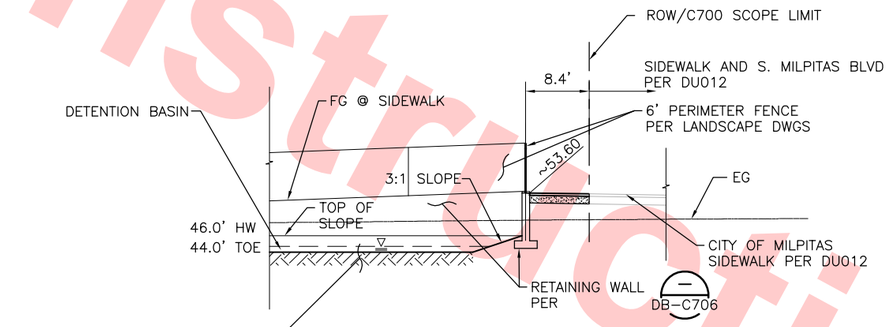

SECTION H
SCALE: 1:10' C623 C113

DETENTION BASIN AT ANCILLARY BUILDING

10' 0' 10' 20'
GRAPHIC SCALE

Not For Construction

REV	DATE	BY	SUB	APP	DESCRIPTION
0	20130710				READINESS FOR CONSTRUCTION

DESIGNED BY J. WU
DRAWN BY J. WU
CHECKED BY J. JI
IN CHARGE J. JI
DATE 20130710

REGISTERED PROFESSIONAL ENGINEER JUN JI No. C 72794 Exp. 06/30/14 CIVIL STATE OF CALIFORNIA

Skanska Shimmick Herzog
1436 California Circle
Milpitas, California 95035
A Joint Venture

KAL KRISHNAN CONSULTING SERVICES
300 LAKESIDE DRIVE, SUITE #220
OAKLAND, CA 94612
SUBMITTED

Lockwood, Andrews & Newnam, Inc. A LEO A DALY COMPANY
T·Y·LIN INTERNATIONAL
APPROVED

VTA BART SILICON VALLEY
BART SILICON VALLEY BERRYESSA EXTENSION

LINE, TRACK, STATIONS AND SYSTEMS
DESIGN UNIT 023
MILPITAS STATION
TYPICAL CROSS SECTIONS

SHEET 4 OF 4

CADD FILENAME C700-S-DB-C623.dwg
SIZE D | SCALE 1"=10'
CONTRACT NO. C700 | REV. 0
AREA CODE DB | SHEET NO. C623 | PAGE NO. 0066

judy Jun 26, 2013 - 4:45pm M:\OC PROJECTS\SVBX\5.0 Deliverables\5.2 Drawings\Milpitas Station\Civil\C700-S-DB-C623.dwg

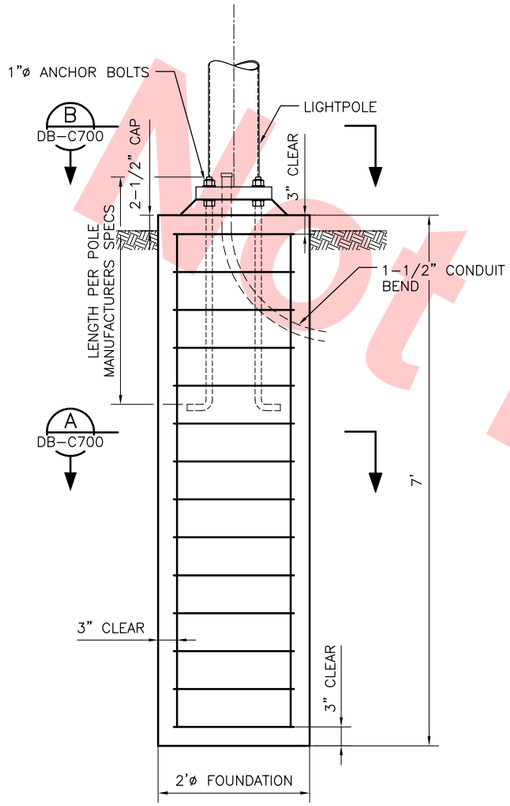

FOUNDATION AT PLANTING AREA

DETAIL 1 DB-C700
SCALE: 1"=1'-0"

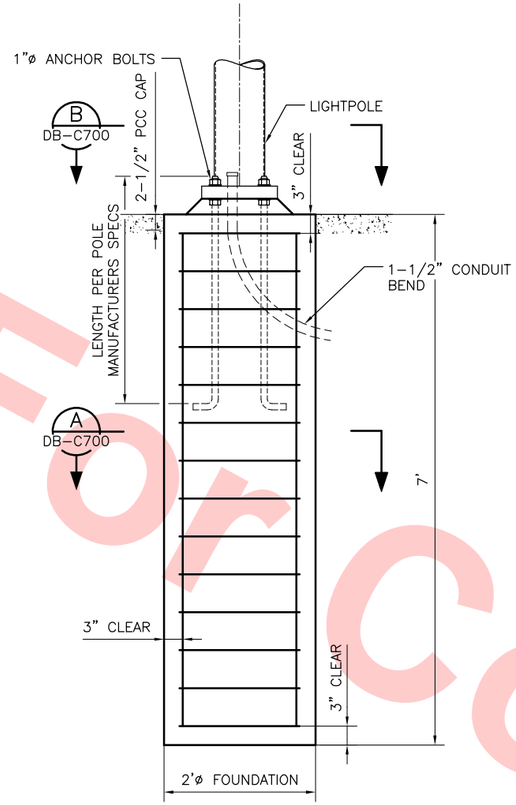

FOUNDATION AT PAVING AREA

DETAIL 2 DB-C700
SCALE: 1"=1'-0"

SPACE RESERVED FOR OTHER TYPE OF LIGHTING POLE FOOTING DETAILS

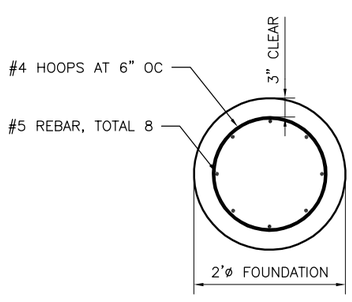

SECTION A DB-C700
SCALE: 1"=1'-0"

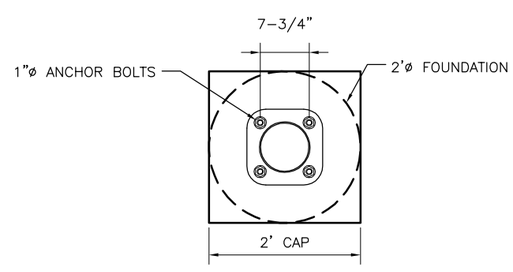

SECTION B DB-C700
SCALE: 1"=1'-0"

Santa Clara Valley Transportation Authority

____NO EXCEPTIONS TAKEN (NET)
____MAKE CORRECTIONS NOTED (MCN)
____AMEND AND RESUBMIT (A/R)

Any action shown above is subject to the terms of the contract and does not relieve the Contractor of any of its obligations under the contract, including design and detailing.

Contract No.: DB11002F

By: _____ Date: _____

Not For Construction

REV	DATE	BY	SUB	APP	DESCRIPTION
0	20130710				READINESS FOR CONSTRUCTION

DESIGNED BY C. O'GARA
DRAWN BY C. O'GARA
CHECKED BY H. SHI
IN CHARGE J. JI
DATE 20130710

REGISTERED PROFESSIONAL ENGINEER JUN JI No. C 72794 Exp. 06/30/14 CIVIL STATE OF CALIFORNIA

Skanska Shimmick Herzog
1436 California Circle
Milpitas, California 95035
A Joint Venture

KAL KRISHNAN CONSULTING SERVICES
300 LAKESIDE DRIVE, SUITE #220
OAKLAND, CA 94612

SUBMITTED _____

Lockwood, Andrews & Newnam, Inc. A CH2M HILL COMPANY
T-Y-LIN INTERNATIONAL

APPROVED _____

VTA BART SILICON VALLEY
BART SILICON VALLEY BERRYESSA EXTENSION

LINE, TRACK, STATIONS AND SYSTEMS
DESIGN UNIT 023
MILPITAS STATION
CONSTRUCTION DETAILS
LIGHTING POLE FOOTING

CADD FILENAME C700-S-DB-C700.dwg
SIZE D | SCALE AS NOTED
CONTRACT NO. C700 | REV. 0
AREA CODE DB | SHEET NO. C700 | PAGE NO. 0067

Jun 26, 2013 - 4:46pm M:\OC PROJECTS\SVBX\5.0 Deliverables\5.2 Drawings\Milpitas Station\Civil\C700-S-DB-C700.dwg
judy

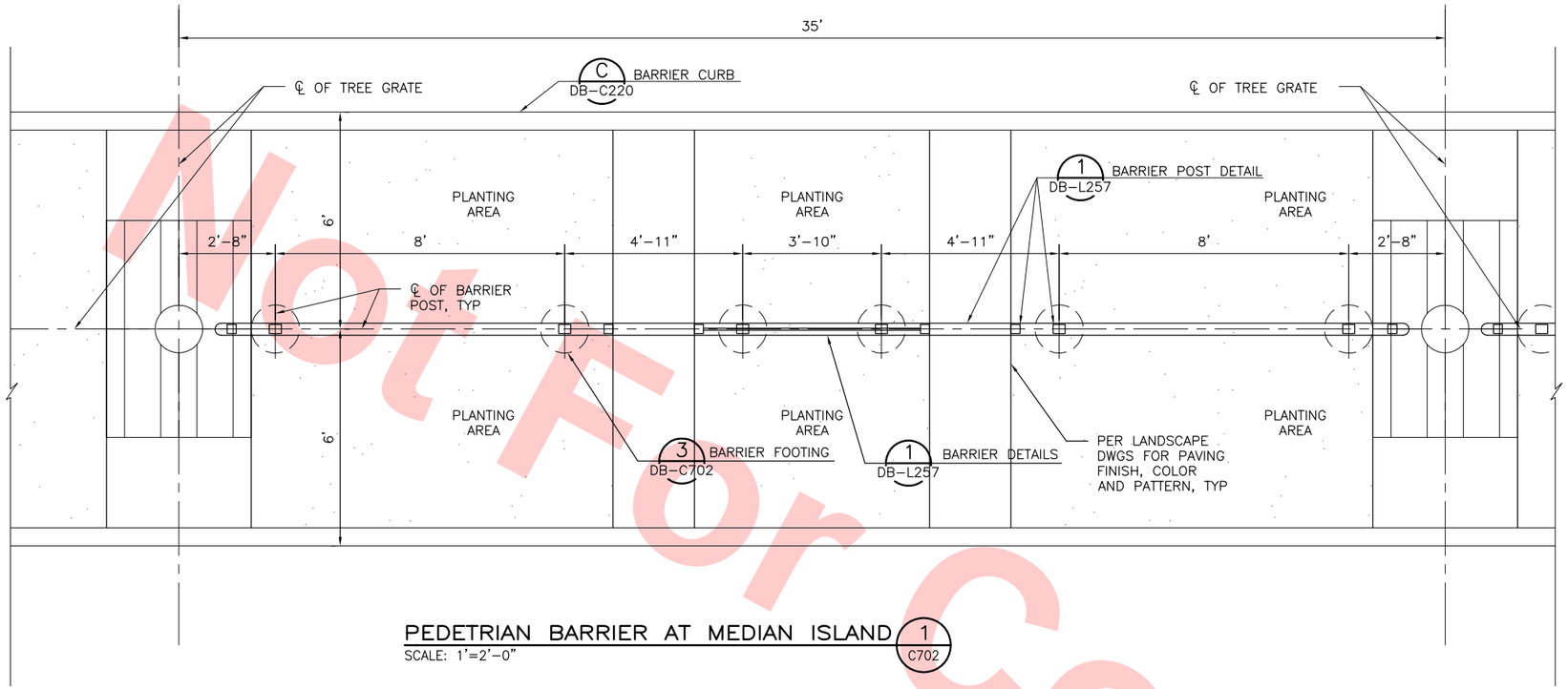

PEDETRIAN BARRIER AT MEDIAN ISLAND (1 / C702)

SCALE: 1'=2'-0"

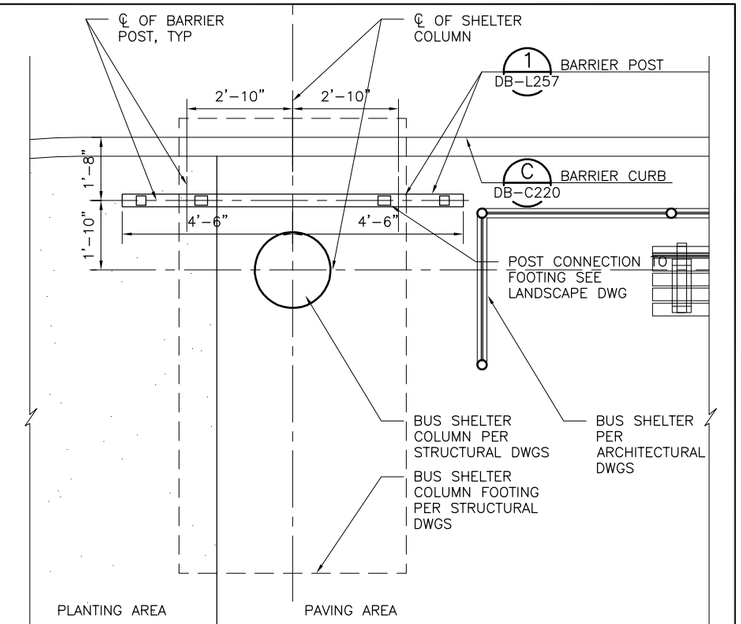

PEDETRIAN BARRIER AT BUS SHELTER (2 / C702)

SCALE: 1'=2'-0"

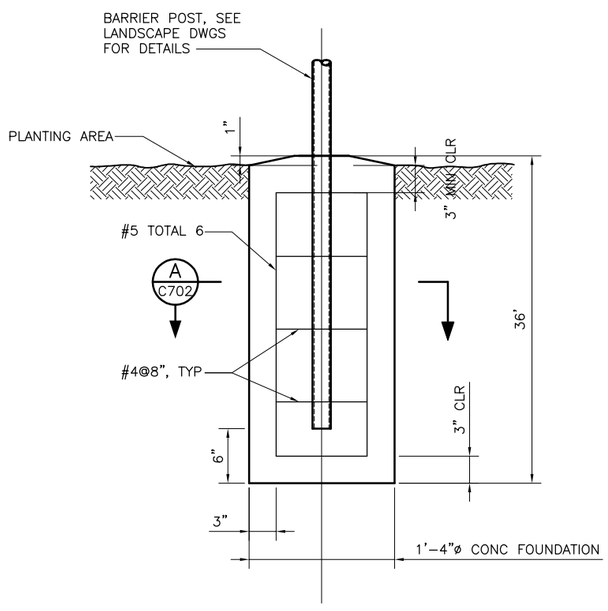

PEDETRIAN BARRIER FOOTING (3 / C702)

SCALE: 1 1/2"=1'-0"

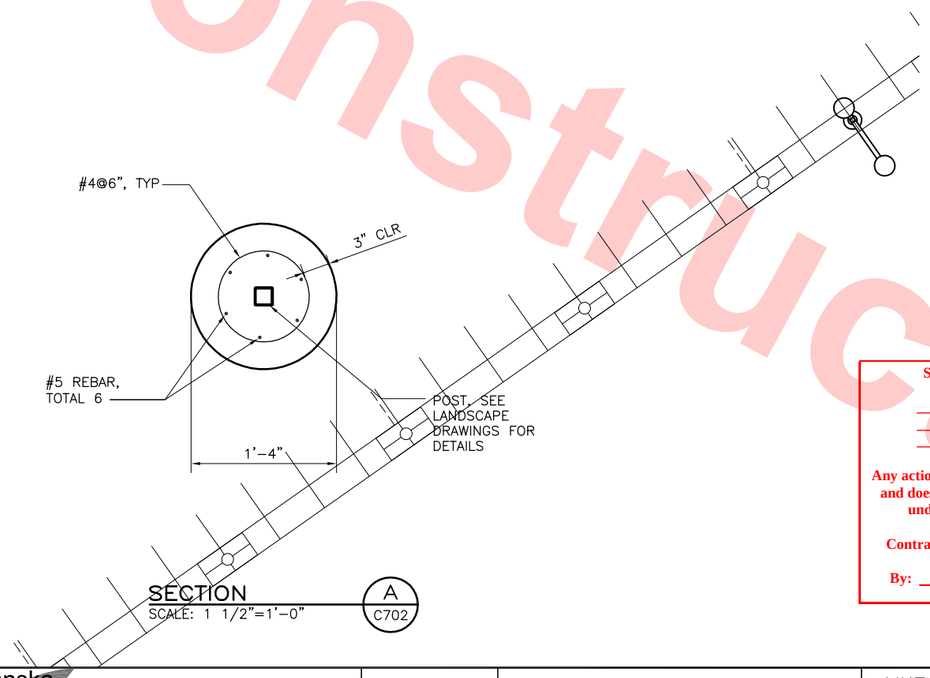

SECTION (A / C702)

SCALE: 1 1/2"=1'-0"

Santa Clara Valley Transportation Authority

____NO EXCEPTIONS TAKEN (NET)
____MAKE CORRECTIONS NOTED (MCN)
____AMEND AND RESUBMIT (A/R)

Any action shown above is subject to the terms of the contract and does not relieve the Contractor of any of its obligations under the contract, including design and detailing.

Contract No.: DB11002F

By: _____ Date: _____

Not For Construction

REV	DATE	BY	SUB	APP	DESCRIPTION
0	20130710				READINESS FOR CONSTRUCTION

DESIGNED BY J. WU
DRAWN BY J. WU
CHECKED BY J. JI
IN CHARGE J. JI
DATE 20130710

REGISTERED PROFESSIONAL ENGINEER JUN JI No. C 72794 Exp. 06/30/14 CIVIL STATE OF CALIFORNIA

Skanska Shimmick Herzog
1436 California Circle Milpitas, California 95035
A Joint Venture

KAL KRISHNAN CONSULTING SERVICES
300 LAKESIDE DRIVE, SUITE #220 OAKLAND, CA 94612

Lockwood, Andrews & Newnam, Inc. A CH2M HILL COMPANY
T·Y·LIN INTERNATIONAL

SUBMITTED _____
APPROVED _____

VTA BART SILICON VALLEY
BART SILICON VALLEY BERRYESSA EXTENSION

LINE, TRACK, STATIONS AND SYSTEMS
DESIGN UNIT 023
MILPITAS STATION
CONSTRUCTION DETAILS
PEDESTRIAN BARRIER FOOTING

CADD FILENAME C700-S-DB-C701.dwg
SIZE D | SCALE AS NOTED
CONTRACT NO. C700 | REV. 0
AREA CODE DB | SHEET NO. C701 | PAGE NO. 0068

Jun 26, 2013 - 4:49pm M:\OC PROJECTS\SVBX\5.0 Deliverables\5.2 Drawings\Milpitas Station\Civil\C700-S-DB-C701.dwg
judy

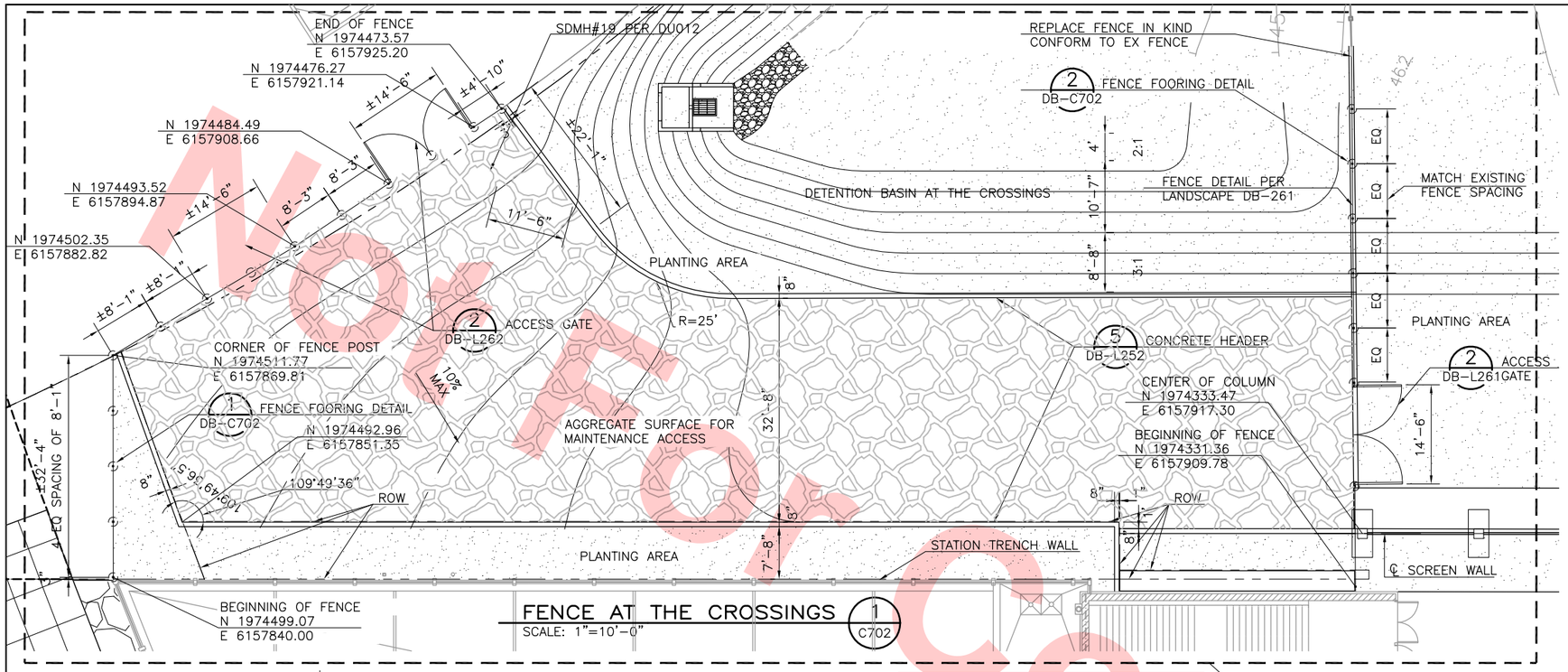

FENCE AT THE CROSSINGS (1 / C702)

SCALE: 1"=10'-0"

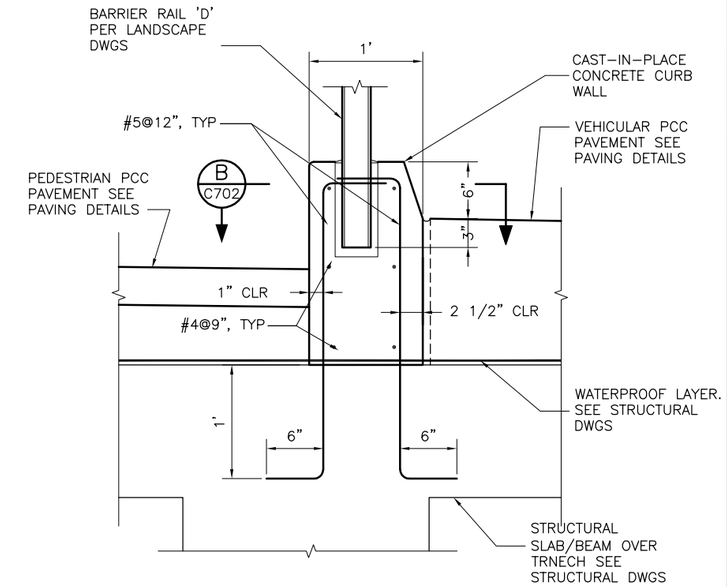

CURB WALL DETAIL – ON STRUCTURE (3 / C702)

SCALE: 1 1/2"=1'-0"

C622

D020 D025 D035 D036

Santa Clara Valley Transportation Authority

____NO EXCEPTIONS TAKEN (NET)
____MAKE CORRECTIONS NOTED (MCN)
____AMEND AND RESUBMIT (A/R)

Any action shown above is subject to the terms of the contract and does not relieve the Contractor of any of its obligations under the contract, including design and detailing.

Contract No.: DB11002F

By: _____ Date: _____

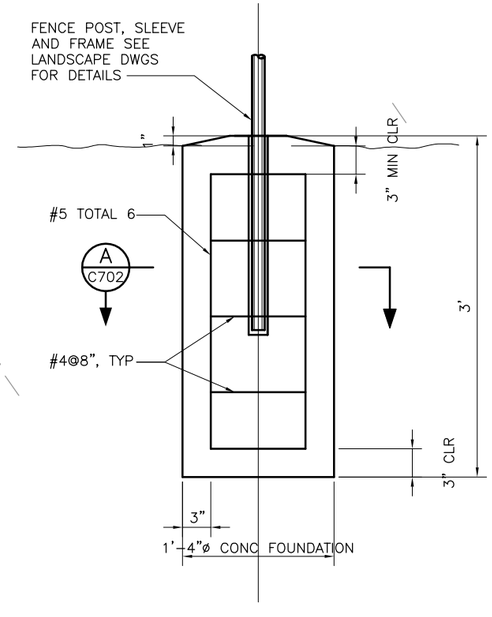

6FT FENCE FOOTING DETAIL (1 / C702)

SCALE: 1 1/2"=1'-0"

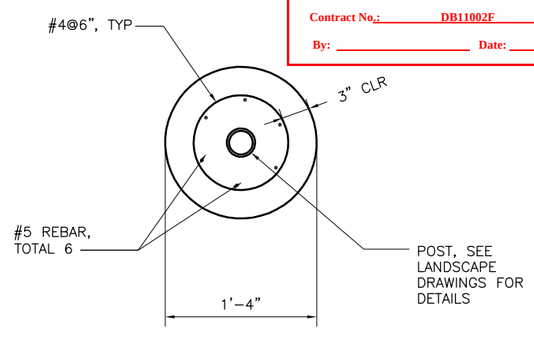

SECTION (A / C702)

SCALE: 1 1/2"=1'-0"

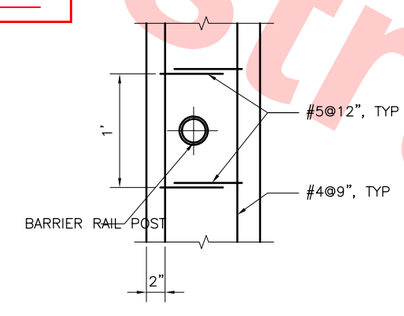

SECTION (B / C702)

SCALE: 1 1/2"=1'-0"

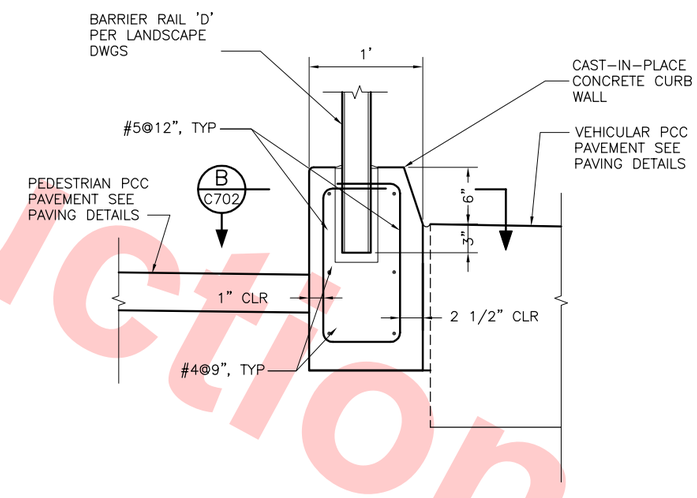

CURB WALL DETAIL – ON GRADE (4 / C702)

SCALE: 1 1/2"=1'-0"

C622

Not for Construction

REV	DATE	BY	SUB	APP	DESCRIPTION
0	20130710				READINESS FOR CONSTRUCTION

DESIGNED BY H. SHI
DRAWN BY H. SHI
CHECKED BY J. JI
IN CHARGE J. JI
DATE 20130710

REGISTERED PROFESSIONAL ENGINEER — JUN JI — No. C 72794 — Exp. 06/30/14 — CIVIL — STATE OF CALIFORNIA

Skanska Shimmick Herzog — 1436 California Circle, Milpitas, California 95035 — A Joint Venture

KAL KRISHNAN CONSULTING SERVICES — 300 LAKESIDE DRIVE, SUITE #220, OAKLAND, CA 94612

SUBMITTED

Lockwood, Andrews & Newnam, Inc. — A LEO A DALY COMPANY

T·Y·LIN INTERNATIONAL

APPROVED

VTA BART SILICON VALLEY

BART SILICON VALLEY BERRYESSA EXTENSION

LINE, TRACK, STATIONS AND SYSTEMS
DESIGN UNIT 023
MILPITAS STATION
CONSTRUCTION DETAILS
FENCE, FOOTING AND CURB WALL

CADD FILENAME: C700-S-DB-C702.dwg
SIZE: D — SCALE: AS NOTED
CONTRACT NO.: C700 — REV.: 0
AREA CODE: DB — SHEET NO.: C702 — PAGE NO.: 0069

Jun 26, 2013 – 5:00pm M:\OC PROJECTS\SVBX\5.0 Deliverables\5.2 Drawings\Milpitas Station\Civil\C700-S-DB-C702.dwg
jrdy

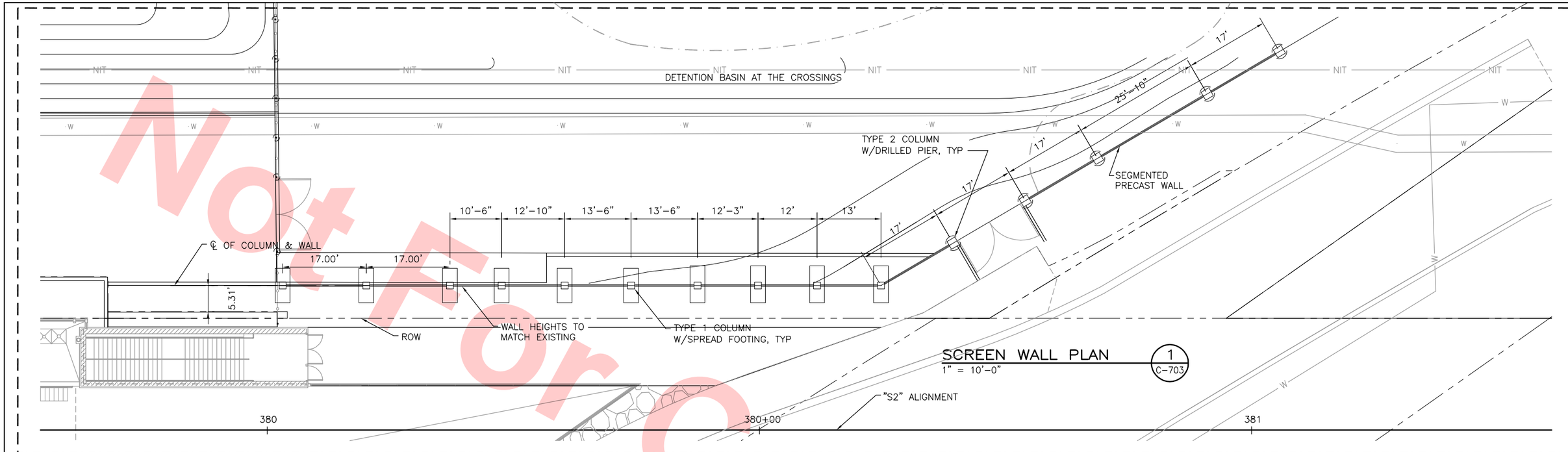

SCREEN WALL PLAN (1 / C-703)
1" = 10'-0"

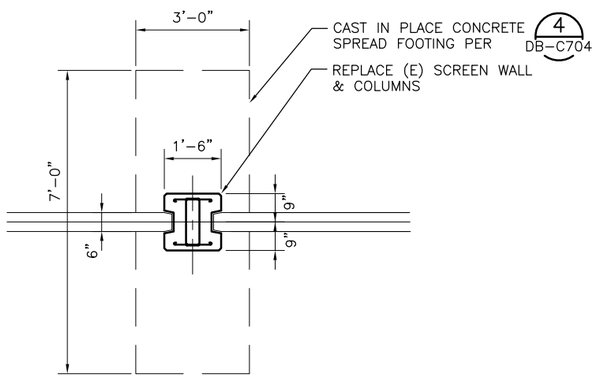

TYPE 1 COLUMN (1 / –)
6" = 1'-0"

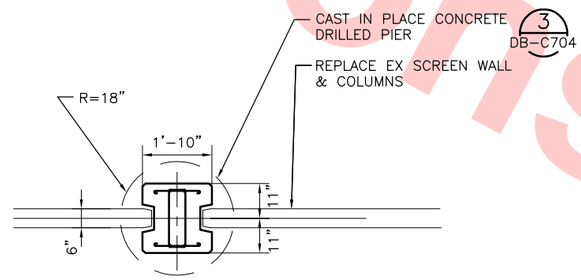

TYPE 2 COLUMN (2 / –)
6" = 1'-0"

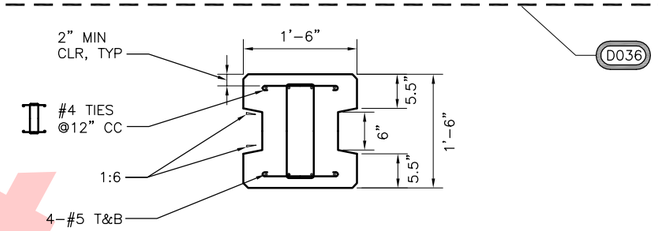

TYPE 1 COLUMN REINFORCEMENT (3 / –)
1'-0" = 1'-0"

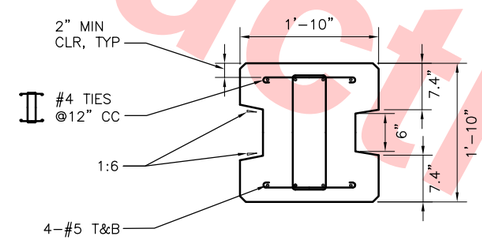

TYPE 2 COLUMN REINFORCEMENT (4 / –)
1'-0" = 1'-0"

Santa Clara Valley Transportation Authority

____NO EXCEPTIONS TAKEN (NET)
____MAKE CORRECTIONS NOTED (MCN)
____AMEND AND RESUBMIT (A/R)

Any action shown above is subject to the terms of the contract and does not relieve the Contractor of any of its obligations under the contract, including design and detailing.

Contract No.: DB11002F

By: _____ Date: _____

Not For Construction

REV	DATE	BY	SUB	APP	DESCRIPTION
0	20130710				READINESS FOR CONSTRUCTION

DESIGNED BY H. SHI
DRAWN BY H. SHI
CHECKED BY J. JI
IN CHARGE J. JI
DATE 20130710

REGISTERED PROFESSIONAL ENGINEER JUN JI No. C 72794 Exp. 06/30/14 CIVIL STATE OF CALIFORNIA

Skanska Shimmick Herzog
1436 California Circle
Milpitas, California 95035
A Joint Venture

KAL KRISHNAN CONSULTING SERVICES
300 LAKESIDE DRIVE, SUITE #220
OAKLAND, CA 94612
SUBMITTED

Lockwood, Andrews & Newnam, Inc. A LEO A DALY COMPANY
T·Y·LIN INTERNATIONAL
APPROVED

VTA BART SILICON VALLEY
BART SILICON VALLEY BERRYESSA EXTENSION

LINE, TRACK, STATIONS AND SYSTEMS
DESIGN UNIT 023
MILPITAS STATION
CONSTRUCTION DETAILS
SCREEN WALL DETAILS
SHEET 1 OF 2

CADD FILENAME C700-S-DB-C703.dwg
SIZE D | SCALE AS NOTED
CONTRACT NO. C700 | REV. 0
AREA CODE DB | SHEET NO. C703 | PAGE NO. 0070

judy Jun 26, 2013 – 5:08pm M:\OC PROJECTS\SVBX\5.0 Deliverables\5.2 Drawings\Milpitas Station\Civil\C700-S-DB-C703.dwg

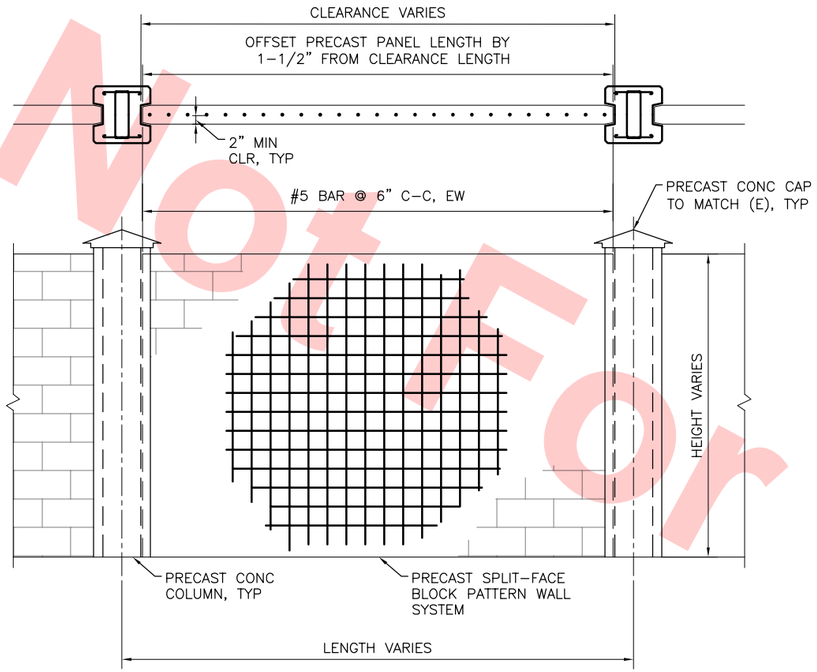

TYPICAL PRECAST WALL DETAIL (1)
6" = 1'-0"

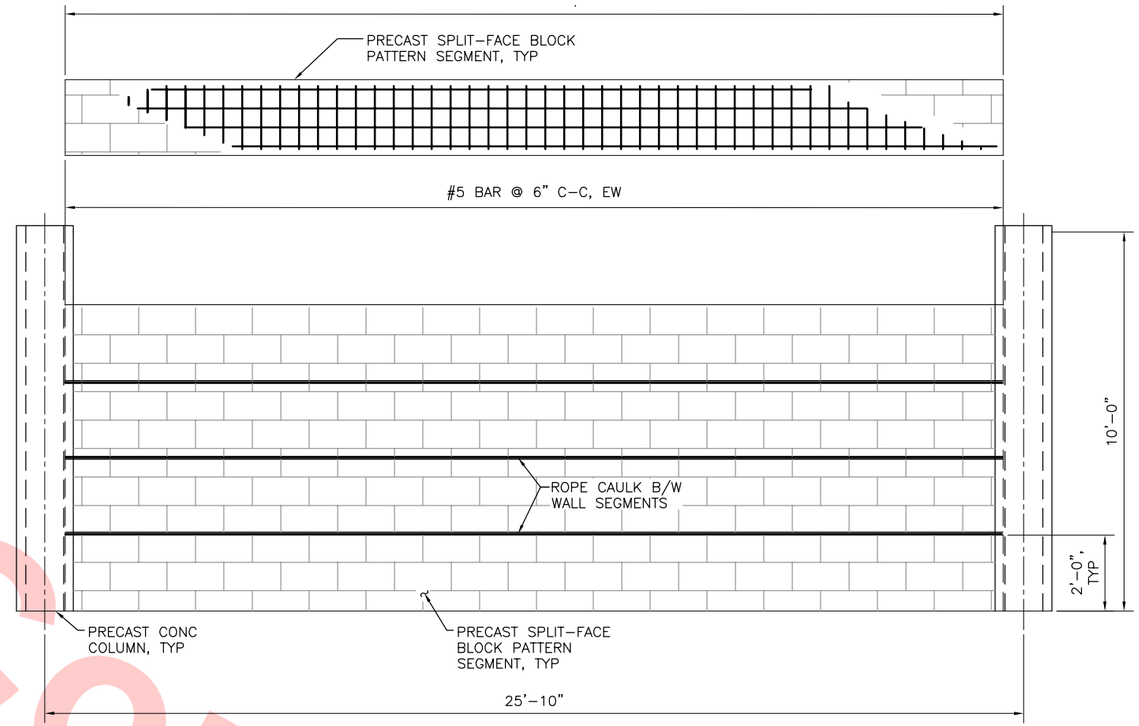

SEGMENTED PRECAST WALL (2)
6" = 1'-0"

Santa Clara Valley Transportation Authority

____NO EXCEPTIONS TAKEN (NET)
____MAKE CORRECTIONS NOTED (MCN)
____AMEND AND RESUBMIT (A/R)

Any action shown above is subject to the terms of the contract and does not relieve the Contractor of any of its obligations under the contract, including design and detailing.

Contract No.: DB11002F

By: _____ Date: _____

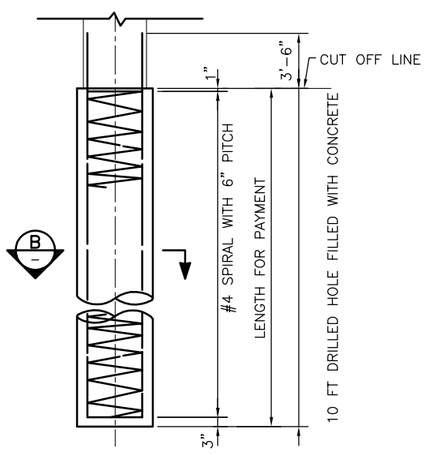

DRILLED PIER REINFORCEMENT (3)
6" = 1'-0"

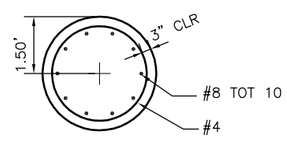

DRILLED PIER DETAIL (B)
6" = 1'-0"

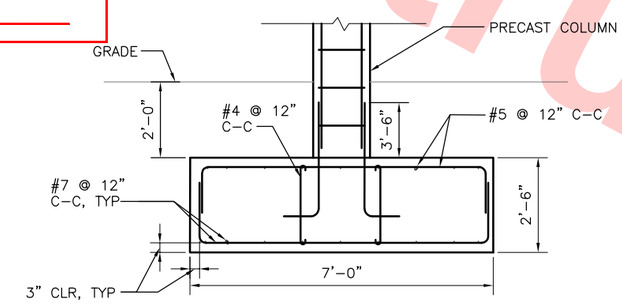

REINFORCEMENT DETAIL (4)
6" = 1'-0"

NOTES

1. FOR KEY NOTES, LEGEND AND ABBREVIATIONS SEE DB-C002.DWG.
2. CAST IN PLACE AND PRECAST CONCRETE SHALL BE 3,000 PSI WITH REINFORCEMENT YIELD STRENGTH OF 60,000 PSI.
3. SPLIT-FACE BLOCK PATTERN AS SPECIFIED BY DESIGN INDUSTRIES, INC.
4. EPOXY DEVELOPMENT LENGTH OF DEFORMED BARS FROM CAST IN PLACE FOUNDATIONS INTO PRECAST COLUMNS.

Not For Construction

REV	DATE	BY	SUB	APP	DESCRIPTION
0	20130710				READINESS FOR CONSTRUCTION

DESIGNED BY H. SHI
DRAWN BY H. SHI
CHECKED BY J. JI
IN CHARGE J.JI
DATE 20130710

REGISTERED PROFESSIONAL ENGINEER JUN JI No. C 72794 Exp. 06/30/14 CIVIL STATE OF CALIFORNIA

Skanska Shimmick Herzog
1436 California Circle
Milpitas, California 95035
A Joint Venture

SUBMITTED _____

Lockwood, Andrews & Newnam, Inc. A CH2M HILL COMPANY
T·Y·LIN INTERNATIONAL
APPROVED _____

VTA BART SILICON VALLEY
BART SILICON VALLEY BERRYESSA EXTENSION

LINE, TRACK, STATIONS AND SYSTEMS
DESIGN UNIT 023
MILPITAS STATION
CONSTRUCTION DETAILS
SCREEN WALL DETAILS
SHEET 2 OF 2

CADD FILENAME C700-S-DB-C704.dwg
SIZE D | SCALE 6" = 1'-0"
CONTRACT NO. C700 | REV. 0
AREA CODE DB | SHEET NO. C704 | PAGE NO. 0071

judy Jun 26, 2013 - 5:11pm M:\QC PROJECTS\SVBX\5.0 Deliverables\5.2 Drawings\Milpitas Station\Civil\C700-S-DB-C704.dwg

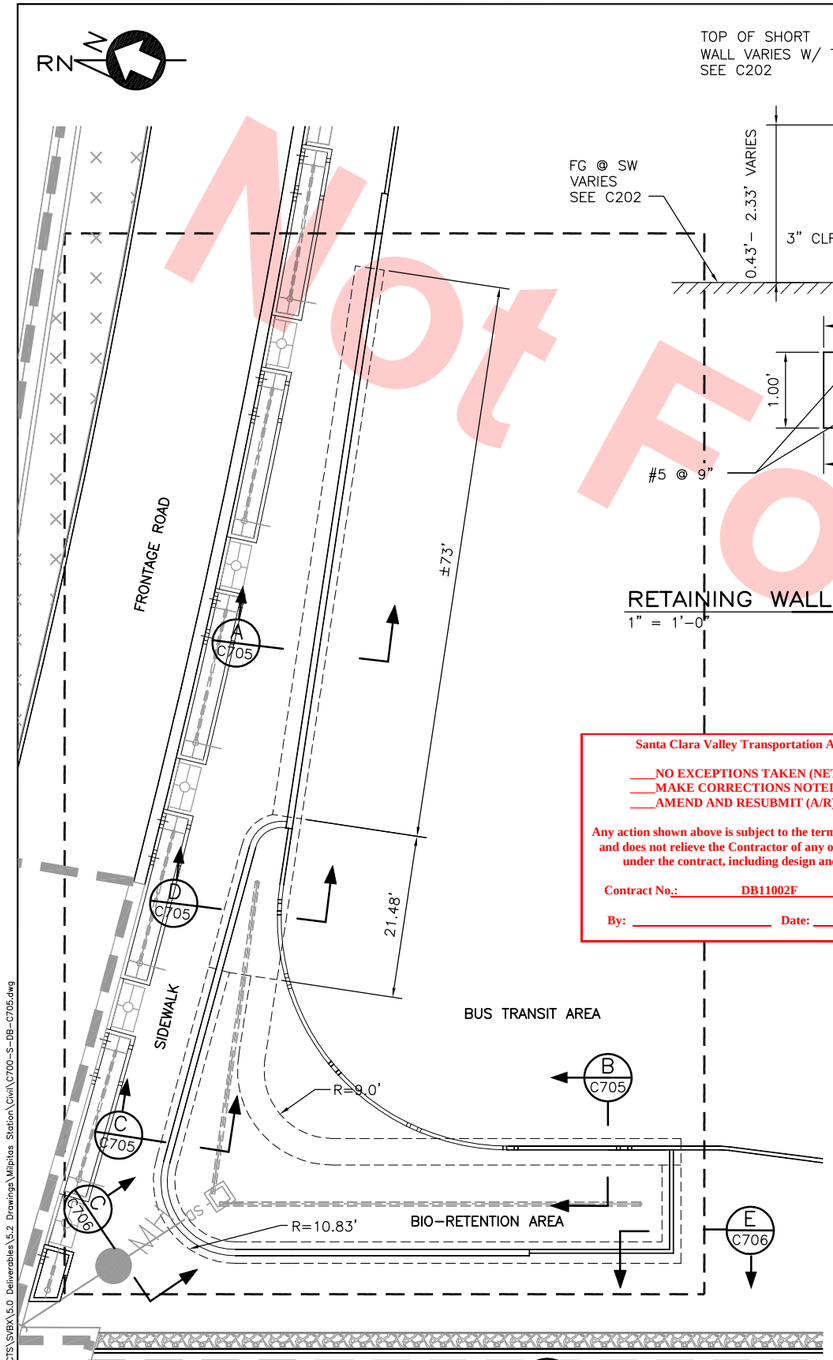

RETAINING WALL PLAN (1 / C-705)
1" = 10'-0"
BIO-RETENTION AREA
C122

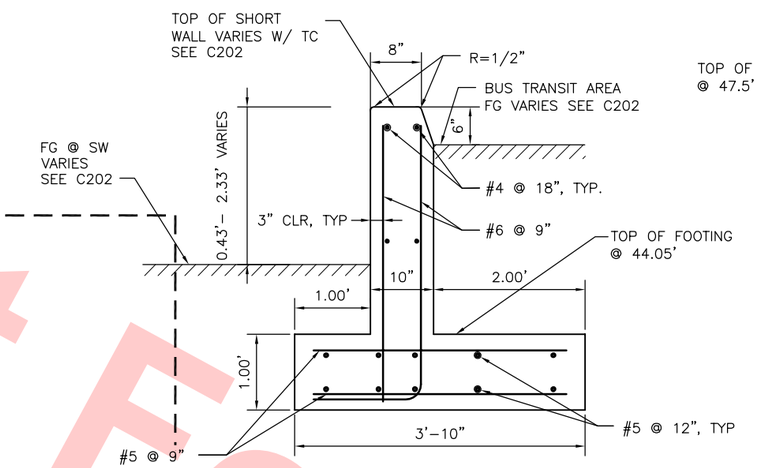

RETAINING WALL 1 TYPICAL SECTION (A / C-705)
1" = 1'-0"

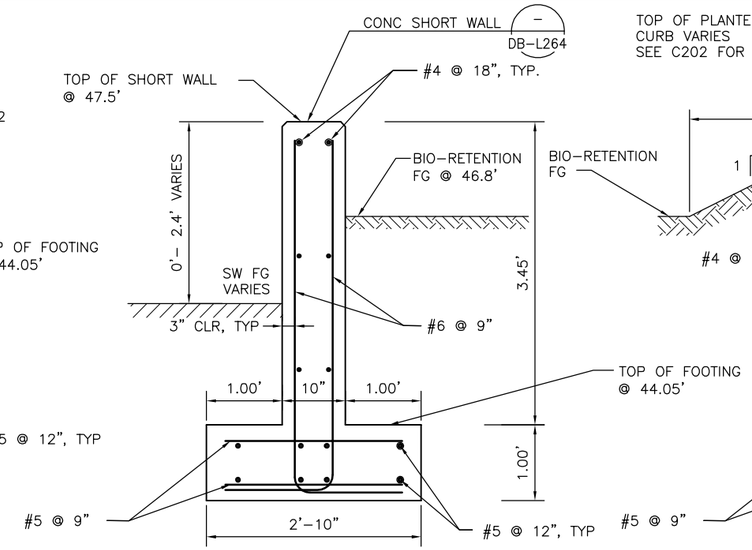

RETAINING WALL 3 TYPICAL SECTION (C / C-705)
1" = 1'-0"

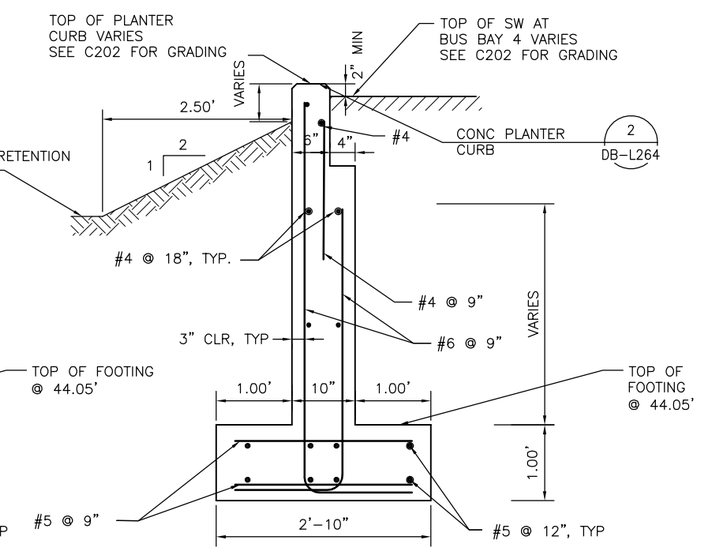

RETAINING WALL 5 TYPICAL SECTION (E / C-705)
1" = 1'-0"

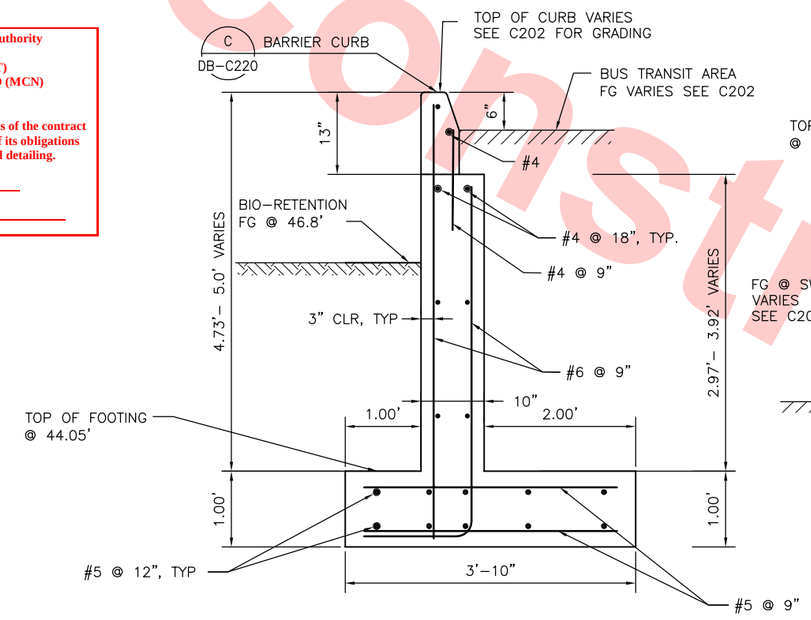

RETAINING WALL 2 TYPICAL SECTION (B / C-705)
1" = 1'-0"

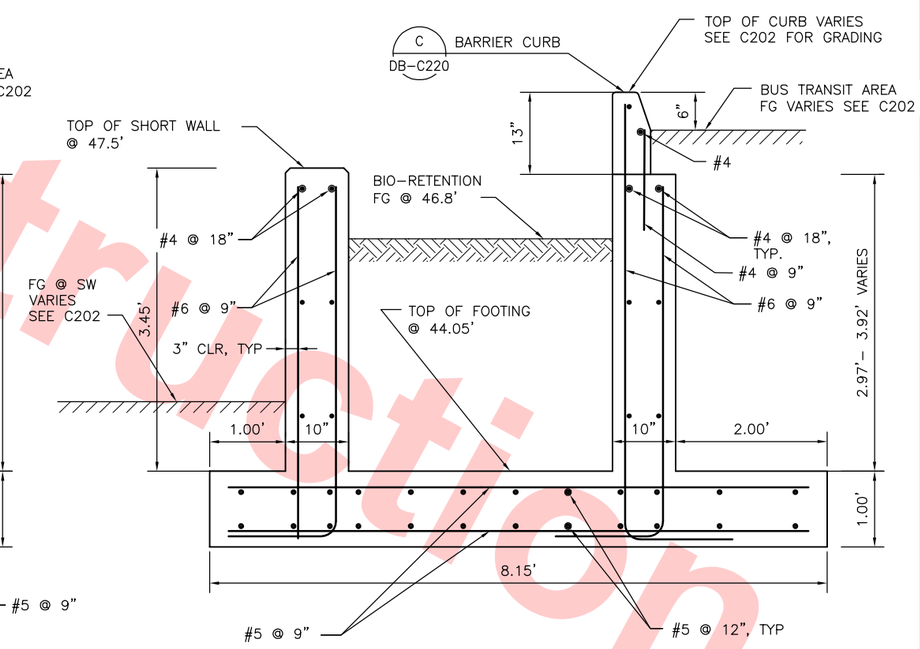

RETAINING WALL 4 TYPICAL SECTION (D / C-705)
1" = 1'-0"

Not For Construction

Santa Clara Valley Transportation Authority

____NO EXCEPTIONS TAKEN (NET)
____MAKE CORRECTIONS NOTED (MCN)
____AMEND AND RESUBMIT (A/R)

Any action shown above is subject to the terms of the contract and does not relieve the Contractor of any of its obligations under the contract, including design and detailing.

Contract No.: DB11002F

By: _____ Date: _____

REV	DATE	BY	SUB	APP	DESCRIPTION
0	20130710				READINESS FOR CONSTRUCTION

DESIGNED BY C. LU
DRAWN BY C. LU
CHECKED BY H. SHI
IN CHARGE J. JI
DATE 20130710

REGISTERED PROFESSIONAL ENGINEER — JUN JI — No. C 72794 — Exp. 06/30/14 — CIVIL — STATE OF CALIFORNIA

Skanska Shimmick Herzog
1436 California Circle
Milpitas, California 95035
A Joint Venture

KAL KRISHNAN CONSULTING SERVICES
300 LAKESIDE DRIVE, SUITE #220
OAKLAND, CA 94612
SUBMITTED

Lockwood, Andrews & Newnam, Inc. — T·Y·LIN INTERNATIONAL
APPROVED

BART SILICON VALLEY
BART SILICON VALLEY BERRYESSA EXTENSION

LINE, TRACK, STATIONS AND SYSTEMS
DESIGN UNIT 023
MILPITAS STATION
CONSTRUCTION DETAILS
CURB WALL

CADD FILENAME: C700-S-DB-C705.dwg
SIZE: D | SCALE: AS NOTED
CONTRACT NO.: C700 | REV.: 0
AREA CODE: DB | SHEET NO.: C705 | PAGE NO.: 0072

judy Jun 26, 2013 – 5:15pm M:\OC PROJECTS\SVBX\5.0 Deliverables\5.2 Drawings\Milpitas Station\Civil\C700-S-DB-C705.dwg

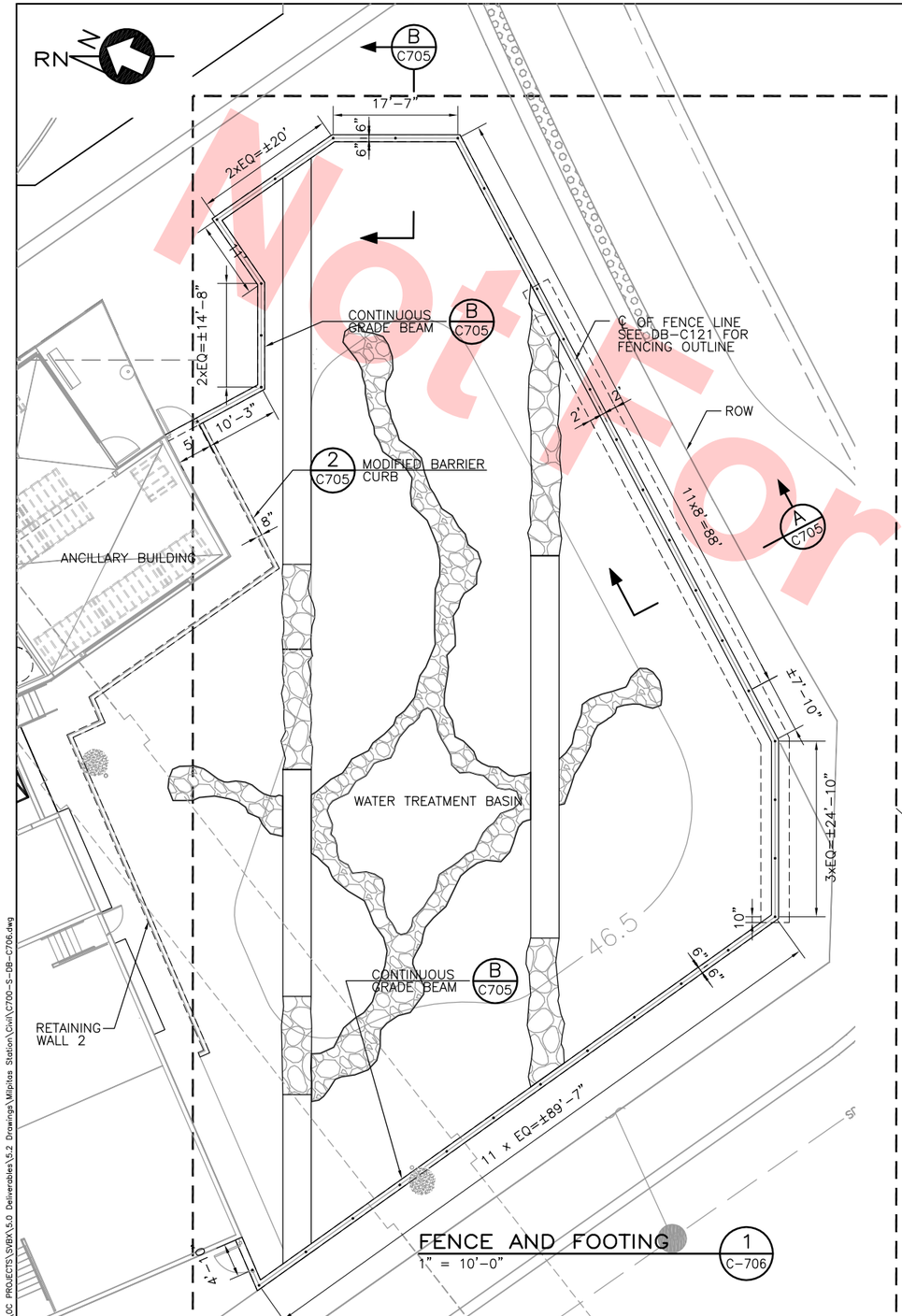

FENCE AND FOOTING — 1 / C-706
1" = 10'-0"

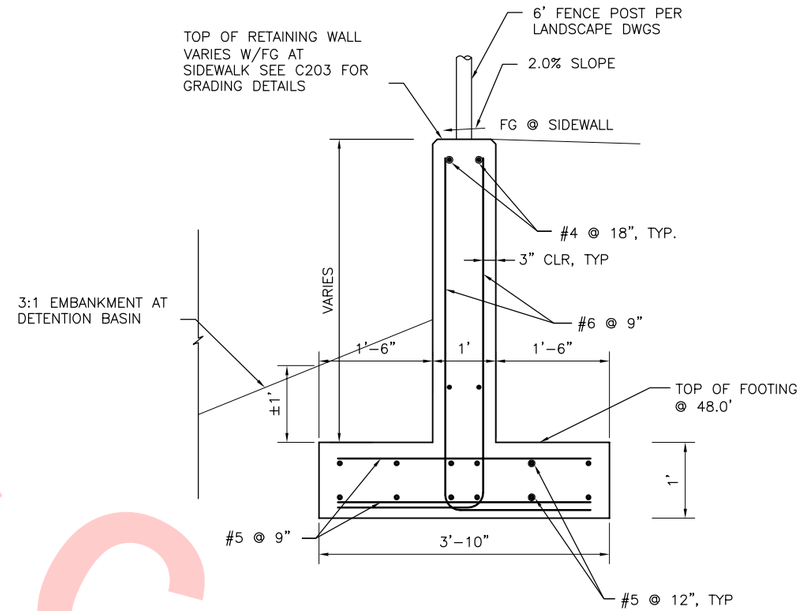

RETAINING WALL SECTION — A / C-706
1" = 1'-0"

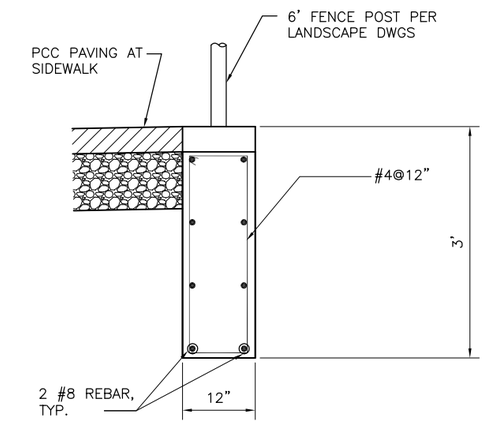

GRADE BEAM SECTION — B / C-706
1" = 1'-0"

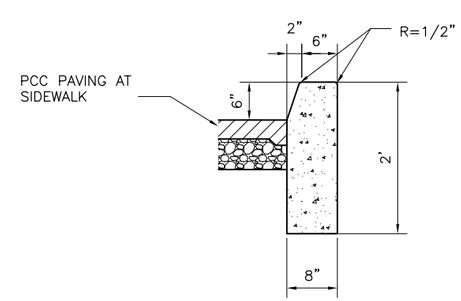

MODIFIED BARRIER CURB — 2 / C-706
1" = 1'-0"

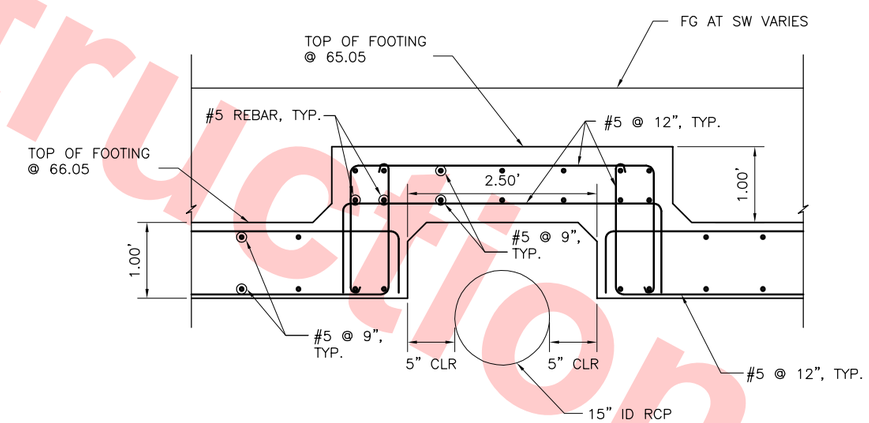

RETAINING WALL SECTION — C / C-706
1" = 1'-0"

C705

Santa Clara Valley Transportation Authority

____NO EXCEPTIONS TAKEN (NET)
____MAKE CORRECTIONS NOTED (MCN)
____AMEND AND RESUBMIT (A/R)

Any action shown above is subject to the terms of the contract and does not relieve the Contractor of any of its obligations under the contract, including design and detailing.

Contract No.: DB11002F

By: _____ Date: _____

Not For Construction

REV	DATE	BY	SUB	APP	DESCRIPTION
0	20130710				READINESS FOR CONSTRUCTION

DESIGNED BY C. LU
DRAWN BY C. LU
CHECKED BY H. SHI
IN CHARGE J. JI
DATE 20130710

REGISTERED PROFESSIONAL ENGINEER — JUN JI — No. C 72794 — Exp. 06/30/14 — CIVIL — STATE OF CALIFORNIA

Skanska Shimmick Herzog — 1436 California Circle, Milpitas, California 95035 — A Joint Venture

KAL KRISHNAN CONSULTING SERVICES — 300 LAKESIDE DRIVE, SUITE #220, OAKLAND, CA 94612 — SUBMITTED

Lockwood, Andrews & Newnam, Inc. — A LEO A DALY COMPANY — T·Y·LIN INTERNATIONAL — APPROVED

VTA BART SILICON VALLEY — BART SILICON VALLEY BERRYESSA EXTENSION

LINE, TRACK, STATIONS AND SYSTEMS
DESIGN UNIT 023
MILPITAS STATION
CONSTRUCTION DETAILS
FENCE AND FOOTING DETAILS

CADD FILENAME C700-S-DB-C706.dwg
SIZE D | SCALE AS NOTED
CONTRACT NO. C700 | REV. 0
AREA CODE DB | SHEET NO. C706 | PAGE NO. 0073

Jun 26, 2013 – 5:17pm M:\OC PROJECTS\SVBX\5.0 Deliverables\5.2 Drawings\Milpitas Station\Civil\C700-S-DB-C706.dwg

Santa Clara Valley Transportation Authority

____NO EXCEPTIONS TAKEN (NET)
____MAKE CORRECTIONS NOTED (MCN)
____AMEND AND RESUBMIT (A/R)

Any action shown above is subject to the terms of the contract and does not relieve the Contractor of any of its obligations under the contract, including design and detailing.

Contract No.: DB11002F

By: _____ Date: _____

NOTES

1. FOR KEY NOTES, LEGEND AND ABBREVIATIONS SEE DB–C002.DWG.
2. CITY ENCROACH PERMIT IS REQUIRED FOR WORK WITHIN CITY'S RIGHT OF WAY OR EASEMENT PERMIT AND FOR ALL UTILITY CONNECTIONS.
3. FOR UNDERGROUND UTILITY AND EASEMENT SEE UTILITY COMPOSITION DWGS.
4. FOR UTILITY RELOCATION REFER TO UTILITY DWGS UNDER DU–012.
5. SEE DB–C300 FOR SIGNAGE AND STREET MARKING.
6. FOR HARDSCAPE FINISHES, COLOR AND SCORING SEE LANDSCAPE DWGS DB–L002.
7. EXISTING SPOT ELEVATION NEED TO BE CONFIRMED ON SITE.

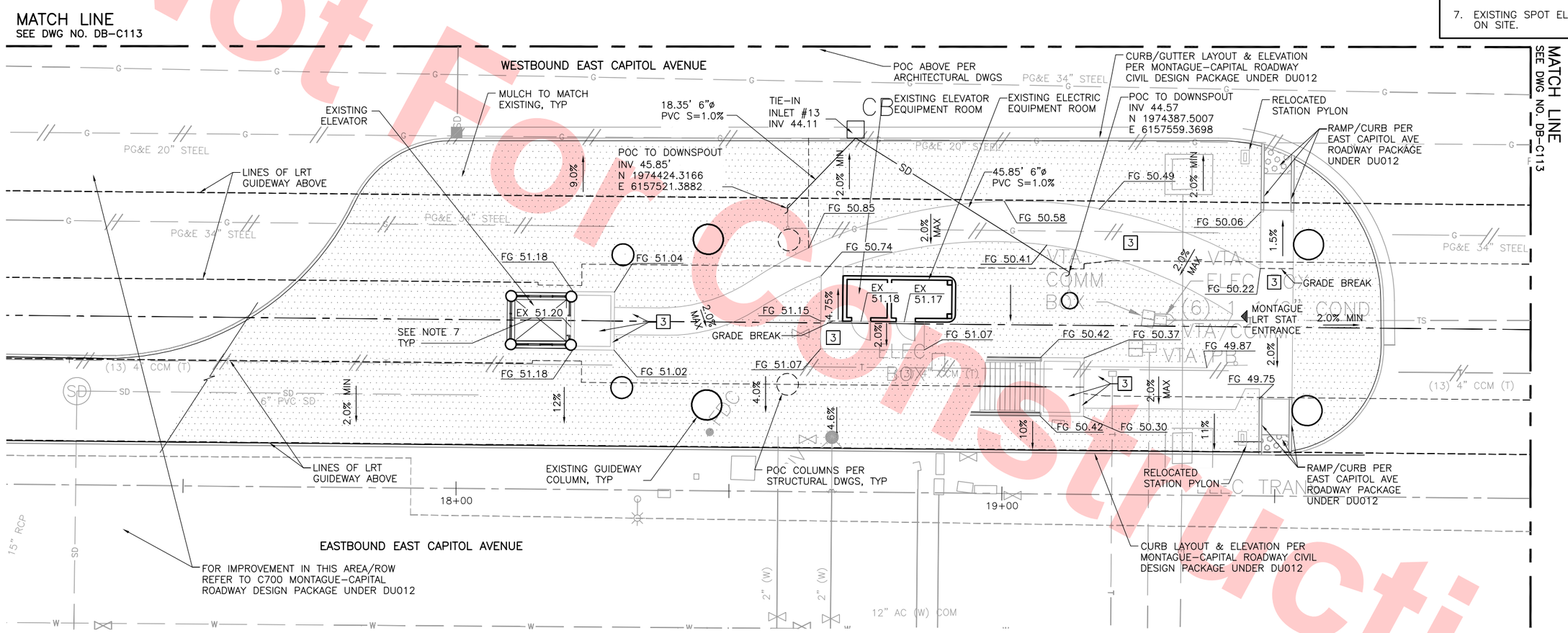

PLAN
1"=10'

10' 0' 10' 20'
GRAPHIC SCALE

KEY PLAN

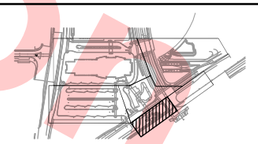

Not For Construction

REV	DATE	BY	SUB	APP	DESCRIPTION
0	20130710				READINESS FOR CONSTRUCTION

DESIGNED BY J. WU
DRAWN BY J. WU
CHECKED BY J. JI
IN CHARGE J. JI
DATE 20130710

REGISTERED PROFESSIONAL ENGINEER JUN JI No. C 72794 Exp. 06/30/14 CIVIL STATE OF CALIFORNIA

Skanska Shimmick Herzog
1436 California Circle
Milpitas, California 95035
A Joint Venture

KAL KRISHNAN CONSULTING SERVICES
300 LAKESIDE DRIVE, SUITE #220
OAKLAND, CA 94612

Lockwood, Andrews & Newnam, Inc. A LEO A DALY COMPANY
T·Y·LIN INTERNATIONAL

SUBMITTED _____
APPROVED _____

VTA BART SILICON VALLEY
BART SILICON VALLEY BERRYESSA EXTENSION

LINE, TRACK, STATIONS AND SYSTEMS
DESIGN UNIT 023
MILPITAS STATION
MONTAGUE LRT AND MILPITAS POC
SITE, GRADING AND DRAINAGE PLAN
SHEET 1 OF 2

CADD FILENAME C700–S–DB–C901.dwg
SIZE D | SCALE 1"=10'–0"
CONTRACT NO. C700 | REV. 0
AREA CODE DB | SHEET NO. C901 | PAGE NO. 0074

judy Jun 26, 2013 – 6:15pm M:\OC PROJECTS\SVBX\5.0 Deliverables\5.2 Drawings\Milpitas Station\Civil\C700–S–DB–C901.dwg

Santa Clara Valley Transportation Authority

____NO EXCEPTIONS TAKEN (NET)
____MAKE CORRECTIONS NOTED (MCN)
____AMEND AND RESUBMIT (A/R)

Any action shown above is subject to the terms of the contract and does not relieve the Contractor of any of its obligations under the contract, including design and detailing.

Contract No.: DB11002F

By: _____ Date: _____

NOTES

1. FOR KEY NOTES, LEGEND AND ABBREVIATIONS SEE DB–C002.DWG.
2. CITY ENCROACH PERMIT IS REQUIRED FOR WORK WITHIN CITY'S RIGHT OF WAY OR EASEMENT PERMIT AND FOR ALL UTILITY CONNECTIONS.
3. FOR UNDERGROUND UTILITY AND EASEMENT SEE UTILITY COMPOSITION DWGS.
4. FOR UTILITY RELOCATION REFER TO UTILITY DWGS UNDER DU–012.
5. SEE DB–C300 FOR SIGNAGE AND STREET MARKING.
6. FOR HARDSCAPE FINISHES, COLOR AND SCORING SEE LANDSCAPE DWGS DB–L002.
7. EXISTING SPOT ELEVATION NEED TO BE CONFIRMED ON SITE.

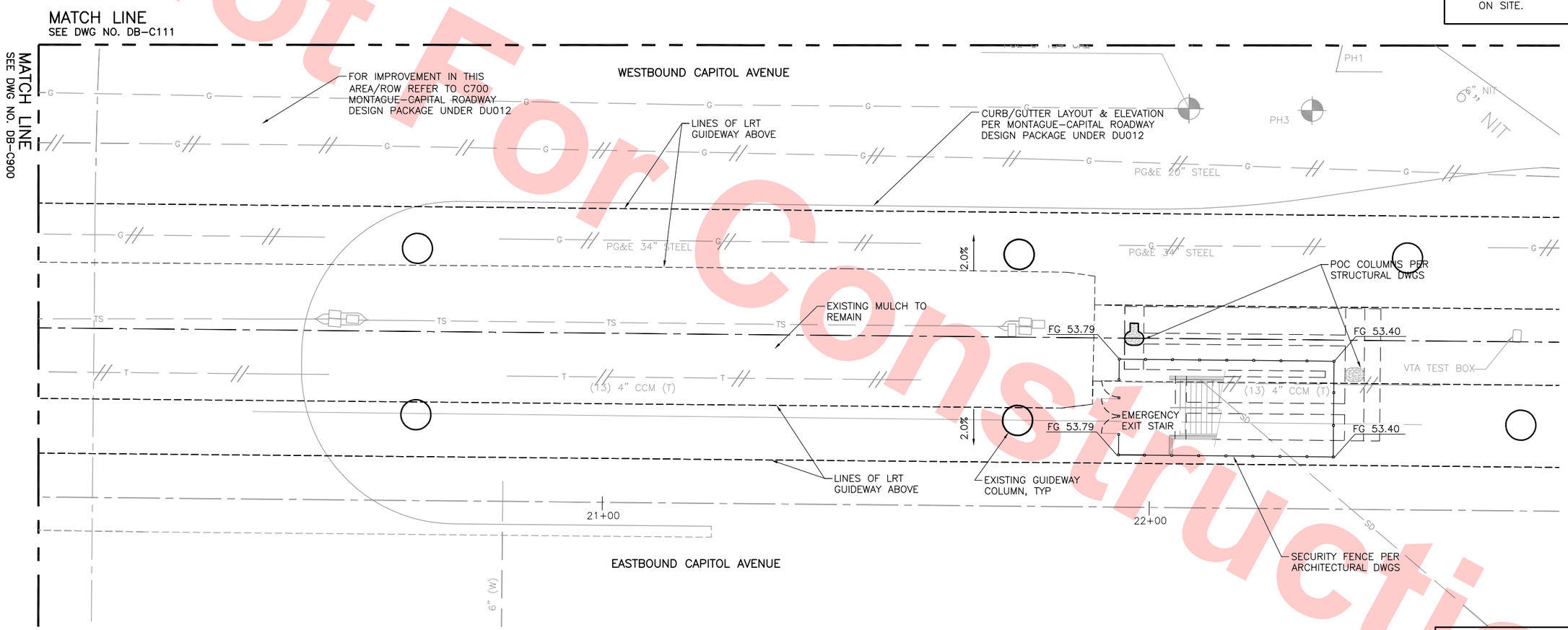

PLAN
1"=10'

10' 0' 10' 20'
GRAPHIC SCALE

KEY PLAN

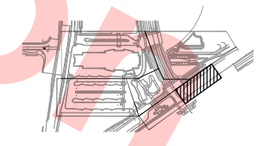

Not For Construction

REV	DATE	BY	SUB	APP	DESCRIPTION
0	20130710				READINESS FOR CONSTRUCTION

DESIGNED BY J. WU
DRAWN BY J. WU
CHECKED BY J. JI
IN CHARGE J. JI
DATE 20130710

REGISTERED PROFESSIONAL ENGINEER JUN JI No. C 72794 Exp. 06/30/14 CIVIL STATE OF CALIFORNIA

Skanska Shimmick Herzog
1436 California Circle
Milpitas, California 95035
A Joint Venture

KAL KRISHNAN CONSULTING SERVICES
300 LAKESIDE DRIVE, SUITE #220
OAKLAND, CA 94612
SUBMITTED

Lockwood, Andrews & Newnam, Inc. A LEO A DALY COMPANY
T·Y·LIN INTERNATIONAL
APPROVED

VTA BART SILICON VALLEY
BART SILICON VALLEY BERRYESSA EXTENSION

LINE, TRACK, STATIONS AND SYSTEMS
DESIGN UNIT 023
MILPITAS STATION
MONTAGUE LRT AND MILPITAS POC
SITE, GRADING AND DRAINAGE PLAN
SHEET 2 OF 2

CADD FILENAME C700–S–DB–C902.dwg
SIZE D | SCALE 1"=10'–0"
CONTRACT NO. C700 | REV. 0
AREA CODE DB | SHEET NO. C902 | PAGE NO. 0075

judy Jun 26, 2013 – 6:12pm M:\OC PROJECTS\SVBX\5.0 Deliverables\5.2 Drawings\Milpitas Station\Civil\C700–S–DB–C902.dwg