DU-023

Skanska Shimmick Herzog
A Joint Venture in Association with LAN | TY Lin

Not For Construction

SSH JV

Milpitas Station
Design Unit 023
Readiness for Construction
Structural

SVBX C700

Wednesday, July 10, 2013

HALF SIZE
COPY

Lockwood, Andrews & Newnam, Inc.
A LEO A DALY COMPANY

TY·LIN INTERNATIONAL
engineers | planners | scientists

NOTES FOR STATION BUILDING

1. GENERAL

   A. ALL MATERIALS AND WORKMANSHIP SHALL CONFORM TO THE CALIFORNIA BUILDING CODE (CBC) 2010 AND TO BART FACILITIES STANDARDS (BFS) DESIGN CRITERIA AND SPECIFICATION, WHICHEVER IS MORE STRINGENT.

   B. INTENT: IF CERTAIN FEATURES ARE NOT FULLY SHOWN OR CALLED FOR ON THE DRAWINGS OR SPECIFICATIONS, THEIR CONSTRUCTION SHALL BE OF SAME CHARACTER AS FOR SIMILAR CONDITIONS THAT ARE SHOWN OR CALLED FOR.

   C. NO BACKFILL AT/OR BELOW GRADE WALLS UNTIL TOP AND BOTTOM SLABS AS REQUIRED HAVE BEEN POURED AND ACHIEVED THEIR DESIGN STRENGTH. OTHERWISE, WALLS SHALL BE SECURELY BRACED TO CARRY CONSTRUCTION LOADS. RETAIN LICENSED PROFESSIONAL ENGINEER FOR THE DESIGN OF SUCH REQUIRED BRACING.

   D. DO NOT USE SCALED DIMENSIONS. USE WRITTEN DIMENSIONS OR WHERE NO DIMENSION IS PROVIDED, CONSULT WITH THE CONSTRUCTION MANAGER FOR CLARIFICATION BEFORE PROCEEDING WITH THE WORK.

   E. SITE VISITS BY THE STRUCTURAL ENGINEER, SHALL NOT BE CONSTRUED AS SPECIAL INSPECTIONS, AS DEFINED BY THE 2010 CBC.

   F. COORDINATE ALL INFORMATION RELATED TO EDGE OF SLAB, CURBS AND DEPRESSIONS WITH ARCHITECTURAL AND CIVIL DRAWINGS. SEE DRAWINGS OTHER THAN STRUCTURAL FOR KINDS OF FLOOR FINISH AND THEIR LOCATION, FOR DEPRESSIONS IN FLOOR SLABS, FOR OPENINGS IN WALLS AND FLOORS REQUIRED BY ARCHITECTURAL AND MECHANICAL, CIVIL FEATURES, WALKS, RAMPS, STAIRS, CURBS, ETC. TYPICAL EDGE OF STRUCTURE SLAB IS SHOWN STRUCTURAL DRAWINGS. COORDINATE LOCATIONS, DIMENSIONS AND ON THE ELEVATIONS WITH EXTERIOR SKIN DETAILS. FOR DETAILS, LOCATIONS AND QUANTITIES OF MISC. INSERTS AND OTHER EMBEDDED ITEMS CAST IN THE WALLS AND SLABS REFER TO ARCHITECTURAL, MECHANICAL, PLUMBING & ELECTRICAL DRAWINGS.

   G. COORDINATE ALL ELEVATOR, STAIR OPENINGS WITH ARCHITECTURAL DRAWINGS. COORDINATE ALL ELEVATOR DETAILS WITH REQUIREMENTS OF ELEVATOR SUPPLIER'S DRAWINGS. PROVIDE ALL SEPARATOR BEAMS, MACHINE ROOM BEAMS, MACHINE ROOM EQUIPMENT SUPPORT BEAMS, EMBEDDED ITEMS SHOWN ON THESE PLANS AND LOCATE IN COORDINATION WITH ELEVATOR SUPPLIER'S DRAWINGS.

   H. IN CASE OF CONFLICT AMONG STRUCTURAL DRAWINGS OR BETWEEN STRUCTURAL DRAWINGS AND SPECIFICATIONS, THE MOST STRINGENT REQUIREMENT GOVERNS.

2. BASIS OF DESIGN

   A. BART FACILITIES STANDARDS, RELEASE 2.1

   B. BART FACILITIES DESIGN CRITERIA, RELEASE 2.1

   C. BART STANDARD PLANS, RELEASE 2.1

   D. BART FACILITIES SPECIFICATIONS, RELEASE 2.1

   E. CALTRANS BRIDGE DESIGN SPECIFICATION MANUAL, APRIL 2000 (WITH UPDATES THROUGH MAY 2004)

   F. CALIFORNIA BUILDING CODE, 2010 AND ASCE 7–05

   G. AMERICAN CONCRETE INSTITUTE, BUILDING CODE AND COMMENTARY, 318–08

   H. AMERICAN INSTITUTE OF STEEL CONSTRUCTION, MANUAL OF STEEL CONSTRUCTION, 13th EDITION.

   I. AMERICAN WELDING SOCIETY: ANSI/AWS D1.1:2010 AND D1.3:2008

   J. AMERICAN CONCRETE INSTITUTE, CODE REQUIREMENTS FOR ENVIRONMENT ENGINEERING CONCRETE STRUCTURE (ACI 350–06)

3. EXISTING CONDITIONS

   FIELD VERIFY EXISTING CONDITIONS PERTINENT TO THE WORK PRIOR TO MATERIAL FABRICATION AND/OR CONSTRUCTION. FIELD CONDITIONS DIFFERENT FROM THOSE NOTED ON THE CONSTRUCTION DRAWINGS SHALL BE PROMPTLY BROUGHT TO THE ATTENTION OF THE VTA. ITEMS TO BE FIELD VERIFIED INCLUDE BUT ARE NOT LIMITED TO:

   A. LOCATION, DIMENSIONS, AND ELEVATIONS OF EXISTING STRUCTURES, STRUCTURAL ELEMENTS, EQUIPMENT AND UTILITIES, WHICH HAVE BEEN SHOWN AS REFERENCE ON THE DRAWINGS AND MAY AFFECT NEW CONSTRUCTION.

   B. HORIZONTAL AND VERTICAL CLEARANCES.

   C. HORIZONTAL AND VERTICAL TIE–IN POINTS.

4. DESIGN LOADS

   A. LIVE LOAD– CONCOURSE (NO REDUCTION ALLOWED)

      1. 100 PSF — STATION CONCOURSE PUBLIC AREAS [CASH CARTS]–350 POUNDS PER WHEEL
      2. 150 PSF — TRAIN CONTROL/COMM ROOM & STAIRS
      3. 350 PSF — TRANSFORMER ROOM AND EMERGENCY GENERATOR ROOM
      4. 150 PSF — ELECTRICAL EQUIPMENT, TRASH, HVAC, TC/C BATTERY, TELCOMM, BATTERY & VALVE ROOMS
      5. 150 PSF — SMOKE CONTROL FAN ROOM
      6. 100 PSF — STORAGE (LIGHT)
      7. MAINTENANCE VEHICLE LOADING: TWO 1500 LBS LOADS 3 FEET APART

   B. LIVE LOAD– MILPITAS BLVD. EXTENSION BRIDGE

      1. ASHTO HS 20–44

   C. LIVE LOAD–PLATFORM (NO REDUCTION ALLOWED)

      1. 100 PSF — STATION PLATFORM PUBLIC AREAS, STAIRS AND STORAGE ROOMS.
      2. 150 PSF — ESCALATOR CONTROL ROOM.
      3. 350 PSF — ELECTRICAL, MECHANICAL AND ELEVATOR MACHINE ROOMS.
      4. MAINTENANCE VEHICLE LOADING: TWO 1500 LBS LOADS 3 FEET APART

   D. LIVE LOAD– ROOF (REDUCIBLE PER PROVISIONS OF CBC)

      1. 20 PSF — STATION ROOF AND ENTRANCE ROOF
      2. 1000 LBS — LOAD ANYWHERE ON ROOF MEMBER

   E. LATERAL LOAD–SEISMIC PER CBC 2010/ASCE 7–05:
      SITE LOCATION IS AT LATITUDE = 37.4° N, LONGITUDE = 121.9° W. SITE CLASS IS D.

      V = Cs·W
      SEISMIC DESIGN CATEGORY D
      STEEL SPECIAL CONCENTRICALLY BRACED FRAME
      Cs=0.25
      Ss=1.5
      S1=0.60
      Sds=1.00
      Sd1=0.60
      R=6.0
      I=1.50

      V = Cs·W
      SEISMIC DESIGN CATEGORY D
      STEEL SPECIAL MOMENT FRAMES
      Cs=0.25
      Ss=1.50
      S1=0.60
      Sds=1.00
      Sd1=0.60
      R=8
      I=1.50

   F. LATERAL LOAD–WIND PER CBC 2010/ASCE 7–05
      P = qGCp–qi(GCpi)
      BASIC WIND SPEED 85 MPH
      EXPOSURE C Iw = 1.15

   G. ACCELERATED RESPONSE SPECTRUM CURVE 2005 MODIFIED WAS USED IN PERFORMING DYNAMIC ANALYSIS FOR THE SUPERSTRUCTURE. MODAL RESPONSE SPECTRUM ANALYSIS PER ASCE 7–05, SECTION 12.9

Santa Clara Valley Transportation Authority

____NO EXCEPTIONS TAKEN (NET)
____MAKE CORRECTIONS NOTED (MCN)
____AMEND AND RESUBMIT (A/R)

Any action shown above is subject to the terms of the contract and does not relieve the Contractor of any of its obligations under the contract, including design and detailing.

Contract No.: DB11002F

By: _____ Date: _____

FOUNDATIONS

1. REFER TO GEOTECHNICAL INVESTIGATION REPORT PREPARED BY PARIKH CONSULTANTS, INC. DATED MARCH 25, 2013 FOR DESIGN SOIL PROPERTIES, DESIGN RECOMMENDATIONS, FIELD DATA, SITE PREPARATION, AND LABORATORY TESTS OF THE SOILS. GEOTECHNICAL CONSULTANT SHALL OBSERVE ALL SITE WORK & FOUNDATION PHASES OF CONSTRUCTION FOR CONFORMANCE TO CONDITIONS & RECOMMENDATIONS CONTAINED WITHIN THE SOIL REPORT.

2. SOIL BEARING CAPACITIES

DEAD AND LIVE LOADS	1750 PSF FOR SPREAD FOOTING PSF FOR MAT FOUNDATION
TOTAL LOADS INCLUDING WIND OR SEISMIC LOADS	2333 PSF FOR SPREAD FOOTING PSF FOR MAT FOUNDATION
COEFFICIENT OF FRICTION	0.35 BETWEEN FIRM SOIL AND CONCRETE FOOTINGS

3. LATERAL EARTH PRESSURES

RETAINING WALL CONDITION	PRESSURE ABOVE GROUNDWATER PCF	PRESSURE BELOW GROUNDWATER PCF
EQUIVALENT FLUID PRESSURE FOR UNRESTRAINED RETAINING WALLS	46	23
EQUIVALENT FLUID PRESSURE FOR RESTRAINED RETAINING WALLS	89	46

4. SHORE ALL EXCAVATIONS AS REQUIRED TO PREVENT SUBSIDENCE OR DAMAGE TO ADJACENT EXISTING STRUCTURES, STREETS, UTILITIES, ETC. RETAIN PROFESSIONAL ENGINEERING CONSULTANTS FOR THE DESIGN OF ALL SHORING.

5. UTILITY OR PLUMBING LINES SHALL NOT BE PLACED THROUGH OR BELOW MAT SLAB OR FOOTING FOUNDATIONS WITHOUT THE EOR'S APPROVAL.

6. DYNAMIC SOIL STRUCTURE INTERACTION ANALYSIS, "RACKING ANALYSIS" WAS PERFORMED BASED ON REPORT BY M2 CONSULTANTS, INC. DATED 4.30.2013 PREPARED FOR PARIKH CONSULTANTS, INC.

CONCRETE

1. PER 2010 CBC, CHAPTER 19, GENERAL, SECTION 1901.2 GENERAL REQUIREMENTS, ALL CONCRETE STRUCTURES SHALL BE DESIGNED AND CONSTRUCTED IN ACCORDANCE WITH THE REQUIREMENTS PER CHAPTER 19 AND THE ADDITIONAL REQUIREMENTS IN ACI 318 AS AMENDED IN SECTION 1908. ACI 350–06 REQUIREMENTS SHALL BE APPLICABLE TO RETAINING WALLS & MAT FOUNDATION.

2. ALL CAST–IN–PLACE CONCRETE SHALL HAVE A MINIMUM 28–DAY COMPRESSIVE STRENGTH f'c AS FOLLOW U.N.O.:

   – MAT FOUNDATION, WALLS 4,500 PSI
   – SLABS, BEAMS 4,000 PSI
   – COLUMNS 5,000 PSI

   REFER TO SPECIFICATION SECTION 03 30 00. THE CONCRETE MIX SHALL BE PROPORTIONED AND DOCUMENTED IN ACCORDANCE WITH SPECIFIED REQUIREMENTS.

3. CEMENT SHALL BE PORTLAND CEMENT, ASTM C150 AND SHALL BE COMPOSED OF APPROVED MIX DESIGN WITH TYPE II/V CEMENT & A WATER/CEMENT RATIO < 0.40

4. REINFORCING STEEL SHALL BE DEFORMED BARS CONFORMING TO ASTM A706, GRADE 60. WELDED WIRE FABRIC SHALL CONFORM TO ASTM A185. SUBMIT A REPORT OF MATERIAL PROPERTIES NECESSARY TO CONFORM TO SPECIFICATION REQUIREMENTS.

5. ALL REINFORCING LAP SPLICES SHALL CONFORM TO ACI CLASS B SPLICES. REFER TO 1/DB–S773 FOR LAPS SPLICE LENGTHS. STAGGER ALL LAP SPLICES IN ADJACENT BARS MINIMUM OF 24" OR ONE LAP LENGTH.

6. ALL MECHANICAL SPLICE COUPLER SHALL BE PER SPECIFICATION 03 20 00

7. TYPICAL CONCRETE FINISHES: SEE SPECIFICATION SECTION 03 35 00 AND ARCHITECTURAL DRAWINGS.

8. MINIMUM CONCRETE COVER OVER REINFORCEMENT STEEL SHALL BE PER ACI 318–08 EXCEPT FOR THE MAT FOUNDATION & RETAINING WALLS CONCRETE COVER SHALL BE PER ACI 350–06.

9. ADMIXTURES TO BE USED IN CONCRETE SHALL BE PER SPECIFICATION SECTION 03 05 15

10. CONCRETE SHALL BE PROPORTIONED TO PROVIDE REQUIRED AVERAGE COMPRESSIVE STRENGTH f'c AS PRESCRIBED IN NOTE 2 ABOVE. CONCRETE SHALL BE PER SPECIFICATION SECTION 03 05 15

11. BACKFILL SLURRY PER SPEC SECTION 31 23 25

12. CONCRETE DENSITY SHALL BE A MINIMUM OF 150 PCF EXCEPT FOR THE MAT FOUNDATION (INVERT SLAB), RETAINING WALL, PLATFORM FRAMING, CONCOURSE FRAMING, CONCRETE STAIRS NUMBERS 1 & 2, CONCRETE COLUMNS BELOW CONCOURSE LEVEL

13. REFER TO MASS CONCRETE REQUIREMENTS IN SPECIFICATION 03 05 15.

CONCRETE FORMWORK

1. CONCRETE FORMWORK SHALL COMPLY WITH SPECIFICATIONS 03 11 14 "CONCRETE FORMWORK"

STRUCTURAL STEEL

1. PER 2010 CBC, STRUCTURAL STEEL SHALL BE IN ACCORDANCE WITH THE REQUIREMENTS OF SECTION 2205.1 AND 2205.2
2. ALL BEAMS (W SHAPES) SHALL BE ASTM A992 GRADE 50.
3. ALL COLUMNS (W SHAPES) SHALL BE ASTM A992 GRADE 50, UNLESS OTHERWISE NOTED.
4. STRUCTURAL STEEL OTHER THAN BEAMS AND COLUMNS SHALL CONFORM TO ASTM A572, GRADE 50 UNLESS NOTED OTHERWISE. RECTANGULAR HOLLOW STRUCTURAL SECTIONS (HSS) SHALL CONFORM TO ASTM A500 GRADE B, Fy=46 KSI. ROUND HSS SHALL CONFORM TO ASTM A500, GRADE B, Fy=42 KSI. ALL PIPE SECTIONS SHALL CONFORM TO ASTM A53, GRADE B, Fy=35 KSI. SCHEDULE 40 DESIGNATES STANDARD PIPE, SCHEDULE 80 DESIGNATES EXTRA STRONG PIPE.
5. ALL CONNECTING AND HORIZONTAL STIFFENER PLATES AT BEAM–TO–COLUMN CONNECTIONS, GUSSET AND STIFFENER PLATES ON GRADE 50 BEAMS AND COLUMN BASE PLATES SHALL BE ASTM A572 GRADE 50.
6. ALL STRUCTURAL STEEL SHALL BE FABRICATED AND ERECTED IN CONFORMANCE WITH THE AISC MANUAL OF STEEL CONSTRUCTION ALLOWABLE STRESS DESIGN 13TH EDITION.
7. UNLESS NOTED OTHERWISE, ALL BOLTS SHALL BE 7/8" DIAMETER HIGH STRENGTH BOLTS. ALL A325 BOLTS SHALL BE TYPE 3.
   THE BOLT TIGHTENING FOR ALL A325 BOLTS IN ALL BEAM TO COLUMN AND BEAM TO BEAM CONNECTIONS SHALL PROVIDE BOLT TENSIONING AS PRETENSIONED JOINT. ALL BOLTS IN MOMENT AND BRACE CONNECTIONS SHALL HAVE MINIMUN CLASS A FAYING SURFACE. ASTM A325 TYPE 3 BOLTS MAY BE REPLACED WITH ASTM F1852 TYPE 3 BOLTS.MACHINE BOLTS (MB) SHALL CONFORM TO ASTM A307.
8. ALL WELDS SHALL CONFORM TO SPECIFICATION SECTION 05 05 22.
9. FOR SURFACE PREPARATION OF SLIP CRITICAL BOLTED CONNECTION (FAYING SURFACE CLASS A OR BETTER) AND STEEL MEMBERS ENCASED IN CONCRETE, SEE SPEC SECTION 05 12 00 ARTICLE 2.04
10. ALL ANCHOR BOLTS (AB) SHALL CONFORM TO ASTM F1554 GRADE 36 U.N.O., SEE PLANS & DETAILS. NUTS AND WASHERS SHALL BE PER ASTM A563 GRADE A AND F436 TYPE 1, RESPECTIVELY.
11. STRUCTURAL STEEL SHOP DRAWINGS SHALL BE SUBMITTED TO THE ENGINEER OF RECORD FOR REVIEW PRIOR TO FABRICATION.
12. SHOP DRAWINGS ARE AN AID FOR FIELD PLACEMENT AND ARE SUPERSEDED BY THE APPROVED STRUCTURAL DRAWINGS, IT SHALL BE CERTAIN THAT ALL CONSTRUCTION IS IN FULL AGREEMENT WITH THE LATEST APPROVED STRUCTURAL DRAWINGS.
13. ALL BEAMS SHALL BE MANUFACTURED WITHIN THE CAMBER, SWEEP, DEPTH, AND WIDTH TOLERANCE PERMITTED BY A.I.S.C. SPECIFICATION FOR STANDARD MILL TOLERANCE.
14. DRILLING (CUTTING. PUNCHING, ETC.) OF HOLES IN BEAM FLANGES IS NOT PERMITTED FOR ANY PURPOSE. SUPPORT METHOD FOR SUSPENDED EQUIPMENT (INCLUDING MECHANICAL EQUIPMENT, ETC.) SHALL BE APPROVED BY THE STRUCTURAL ENGINEER.
15. PENETRATION THROUGH WEBS OF COLUMNS, BEAMS, OR BRACES OF BRACED FRAMES IS NOT PERMITTED, WITHOUT WRITTEN PERMIT APPROVAL BY STRUCTURAL EOR.

STEEL DECKING

1. METAL DECK SHALL BE PER SPECIFICATION SECTION 05 30 00
2. ROOF DECKING MARK D1 SHALL BE CONSOLIDATED SYSTEMS, INC OR APPROVED EQUAL, Fy=40 KSI PROPERTIES OF METAL DECK SHALL BE AS GIVEN IN ICC REPORT NRO ESR–2657 DATED MARCH 1, 2013.
3. ROOF DECKING MARK D2 & FLOOR DECKING MARK D3 SHALL BE VERCO OR APPROVED EQUAL & SHALL BE GALVANIZED, Fy=38 KSI, DECK SHALL BE AS GIVEN IN ICC REPORT NRO ESR–1735P DATED MARCH 1, 2011.
4. ALL SHORING OF METAL DECK SHALL BE PER MANUFACTURER'S REQUIREMENT.
5. STEEL DECK SUPPORT SHALL BE AS FOLLOWS: SEE SCHEDULE A/DB–S781
6. THE STEEL DECK SHALL BE CONTINUOUS FOR 3 SPANS MINIMUM, WHENEVER POSSIBLE.
7. SEE SPECIFICATION SECTION 05 30 00 FOR COATING OF METAL DECK.
8. DECKS SHALL HAVE A MINIMUM BEARING OF 2" AT ALL SUPPORTS.
9. ALL SCREWS ATTACHING ELEMENTS TO ROOF METAL DECK, SHALL BE LOCATED IN THE UPPER PROFILE OF THE METAL DECK, IN ORDER TO MINIMIZE THE VISUAL IMPACT OF SCREWS.

Not For Construction

REV	DATE	BY	SUB	APP	DESCRIPTION
0	20130710				READINESS FOR CONSTRUCTION
0	20130531				READINESS FOR CONSTRUCTION
					REPLACED C700–S–DB–S001 REV P.

DESIGNED BY J. REBER, S.E.
DRAWN BY P. DIAZ
CHECKED BY M. TARAZI
IN CHARGE M. TARAZI
DATE 20130710

REGISTERED PROFESSIONAL ENGINEER SOHAM FUAD TARAZI # S-3185 EXP. 6/30/14 STRUCTURAL STATE OF CALIFORNIA

Skanska Shimmick Herzog
1436 California Circle
Milpitas, California 95035
A Joint Venture

MFT Consulting Engineers, Inc. 1773 San Pablo Ave., Suite A3 Pinole, CA 94564 (510) 222-4106 Fax (510) 222-4418
Anil Verma Associates, Inc.
Lockwood, Andrews & Newnam, Inc. A LEO A DALY COMPANY
T·Y·LIN INTERNATIONAL

SUBMITTED
APPROVED

VTA. BART SILICON VALLEY
BART SILICON VALLEY BERRYESSA EXTENSION

LINE, TRACK, STATIONS AND SYSTEMS DESIGN UNIT 023
MILPITAS STATION
STRUCTURAL GENERAL NOTES
SHEET 1 OF 3

CADD FILENAME C700–S–DB–S001X.dwg
SIZE D | SCALE NONE
CONTRACT NO. C700 | REV. 0
AREA CODE DB | SHEET NO. S001X | PAGE NO. 0134

cad–02 Jul 05, 2013 – 1:47pm P:\BART Berryessa Extension Line\S – STRUCTURAL MILPITAS\WORK_6–10–2012\C700–S–DB–S001X.dwg

Not For Construction

MASONRY

1. MASONRY UNITS TO CONFORM TO ASTM C90 GRADE N, TYPE I, LIGHT WEIGHT UNITS. DESIGN COMPRESSIVE STRENGTH OF MASONRY f'm=1500 PSI, TYP.
2. MORTAR TO CONFORM TO ASTM C270, TYPE S AND 2010 CBC REQUIREMENTS WITH MINIMUM COMPRESSIVE STRENGTH OF 1800 PSI. DO NOT USE PLASTIC CEMENT AND DO NOT USE MASONRY CEMENT IN THE MORTAR MIXTURE.
3. GROUT TO CONFORM TO ASTM C476 AND 2010 CBC REQUIREMENTS WITH A MINIMUM COMPRESSIVE STRENGTH EQUAL TO OR GREATER THAN THE CONCRETE MASONRY UNIT STRENGTH, BUT NOT LESS THAN 2500 PSI.
4. ALL MASONRY UNITS TO BE GROUTED SOLID.
5. REFER TO SPECIFICATION 04 22 00 FOR OTHER REQUIREMENTS.

SPECIAL INSPECTIONS: (SEE ALSO DB-S003X)

1. GENERAL: IN ADDITION TO THE INSPECTIONS REQUIRED BY SECTION 108.4.4, OF THE 2010 CBC TITLE 24, PART 2, VOLUME 1 OF 2 THE OWNER SHALL EMPLOY PROJECT INSPECTOR AND/OR ONE OR MORE SPECIAL INSPECTORS WHO SHALL PROVIDE INSPECTIONS DURING CONSTRUCTION ON THE TYPES OF WORK LISTED UNDER SECTION 1704 OF THE 2010 CBC.
2. SPECIAL INSPECTOR: THE SPECIAL INSPECTORS SHALL BE QUALIFIED PERSONS WHO SHALL DEMONSTRATE COMPETENCE, FOR INSPECTION OF A PARTICULAR TYPE OF CONSTRUCTION OR OPERATION REQUIRING SPECIAL INSPECTION.
3. DUTIES AND RESPONSIBILITIES OF THE SPECIAL INSPECTORS: THE SPECIAL INSPECTORS SHALL OBSERVE THE WORK ASSIGNED FOR CONFORMANCE TO THE APPROVED DESIGN DRAWINGS AND SPECIFICATIONS.

   THE SPECIAL INSPECTORS SHALL SUBMIT INSPECTION REPORTS TO, THE ENGINEER OR ARCHITECT OF RECORD, AND OTHER DESIGNATED PERSONS. ALL DISCREPANCIES SHALL BE BROUGHT TO THE IMMEDIATE ATTENTION OF THE CONTRACTOR FOR CORRECTION, THEN, IF UNCORRECTED, TO THE PROPER DESIGN AUTHORITY.

   THE SPECIAL INSPECTOR SHALL SUBMIT A FINAL SIGNED REPORT STATING WHETHER THE WORK REQUIRING SPECIAL INSPECTION WAS, TO THE BEST OF THE INSPECTOR'S KNOWLEDGE, IN CONFORMANCE TO THE APPROVED PLANS AND SPECIFICATIONS AND THE APPLICABLE WORKMANSHIP PROVISIONS OF THIS CODE.
4. STANDARDS OF QUALITY: THE REFERENCED STANDARDS LISTED IN CHAPTER 35, PART 2 AND ARE PART OF THIS CODE.
5. EXCEPT AS PROVIDED IN SECTION 1704, THE TYPES OF WORK LISTED BELOW, SHALL BE INSPECTED BY A SPECIAL INSPECTOR/PROJECT INSPECTOR.
   a. CONCRETE: DURING THE TAKING OF TEST SPECIMENS AND PLACING OF REINFORCED CONCRETE.
   b. BOLTS INSTALLED IN CONCRETE SHALL BE PER REQUIREMENTS OF SECTIONS 1911 AND 1912 OR TABLE 1911.2
   c. STRUCTURAL WELDING: SPECIAL INSPECTOR REQUIRED.
   d. REINFORCING STEEL: SPECIAL INSPECTOR REQUIRED.

      -DURING PLACING OF REINFORCING STEEL FOR ALL CONCRETE REQUIRED TO HAVE SPECIAL INSPECTION BY ITEM 1.

POWER ACTUATED FASTENERS

1. POWER ACTUATED FASTENERS SHALL BE OF THE TYPE AND SIZE CALLED FOR ON THE DRAWINGS AND IN THE SPECIFICATIONS.
2. POWER ACTUATED FASTENERS SHALL BE PLACED A MINIMUM OF 3" FROM ANY CONCRETE EDGE AND 1/2" FROM ANY STEEL EDGE. MINIMUM SPACING SHALL BE 4" IN CONCRETE AND 1/2" IN STEEL.
3. WHEN USED TO CONNECT ELEMENT TO STEEL MEMBERS, THE POINT OF THE POWER ACTUATED FASTENERS SHALL COMPLETELY PENETRATE THE THICKNESS OF THE BASE METAL.
4. POWER ACTUATED FASTENERS SHALL BE INSTALLED WITH STRICT ADHERENCE TO ALL MANUFACTURERS SPECIFIACTIONS.
5. USE ICC EVALUATION REPORT #2269 FOR POWER ACTUATED FASTENERS.
6. POWER ACTUATED FASTENERS SHALL BE USED ONLY FOR CONNECTION NON-STRUCTURAL ELEMENTS AND NON-LOAD BEARING STUD WALLS.

DEFERRED SUBMITTALS:

CONNECTION CALCULATIONS AND DRAWINGS OF MECHANICAL EQUIPMENT TO SUPPORTS SHALL BE SUBMITTED TO THE ENGINEER OF RECORD FOR APPROVAL PRIOR TO INSTALLATION. CALCULATIONS AND DRAWINGS SHALL BE STAMPED AND SIGNED BY A CALIFORNIA REGISTERED CIVIL/STRUCTURAL ENGINEER.

SUBMITTALS

1. SHOP DRAWINGS, INCLUDING CONCRETE MIX DESIGNS, REQUIRED BY THE SPECIFICATIONS SHALL BE SUBMITTED TO THE STRUCTURAL ENGINEER OF RECORD (EOR) FOR REVIEW PRIOR TO FABRICATION OF THE ITEMS. A SCHEDULE FOR SUBMITTAL OF SHOP DRAWINGS SHALL BE PREPARED AND REVIEWED BY THE ARCHITECT AND STRUCTURAL EOR PRIOR TO THE START OF FABRICATION. THE SCHEDULE SHALL PROPORTION THE QUANTITY OF SHOP DRAWINGS TO BE REVIEWED IN EACH SUBMITTAL TO ALLOW SUFFICIENT TIME, AS DEEMED REASONABLE IN THE PROFESSIONAL JUDGEMENT OF THE ARCHITECT AND STRUCTURAL ENGINEER, TO PERMIT ADEQUATE REVIEW.
2. SHOP DRAWINGS SHALL INDICATE THE DATE OR REVISION(S) FROM WHICH THE DRAWINGS WERE PREPARED. SUBMITTALS THAT DO NOT IDENTIFY THE LATEST DATE OR REVISION SHALL BE RETURNED WITHOUT REVIEW. ONLY SHOP DRAWINGS THAT ARE COMPLETE WILL BE ACCEPTED FOR REVIEW.
3. SHOP DRAWINGS AND CONCRETE MIX DESIGNS WILL NOT BE ACCEPTED DIRECTLY FROM SUBCONTRACTORS. SHOP DRAWINGS AND CONCRETE MIX DESIGNS WILL BE ACCEPTED ONLY AFTER BEING REVIEWED AND SIGNED BY THE CONTRACTOR QUALITY CONTROL, INDICATING COMPLIANCE WITH THE REQUIREMENTS OF THE CONSTRUCTION DOCUMENTS. SHOP DRAWINGS AND CONCRETE MIX DESIGNS NOT COMPLYING WITH THE REQUIREMENTS NOTED ABOVE OR IN THE SPECIFICATIONS WILL BE RETURNED WITHOUT REVIEW.
4. SUBMIT TWO (2) SETS OF 11x17 SHOP DRAWINGS. ONE SET WILL BE RETURNED AFTER STRUCTURAL REVIEW.
5. IF, AFTER REVIEW, THE SHOP DRAWINGS ARE NOTED AS REVISE AND RESUBMIT, THE RESUBMITTED SHOP DRAWINGS SHALL IDENTIFY EACH REVISION AND/OR ADDITION BY CLOUD OR OTHER MEANS TO ASSURE PROPER REVIEW.

STRUCTURAL ABBREVIATIONS:

@	AT
APPROX	APPROXIMATE
ARCH	ARCHITECTURAL
BM	BEAM
BOT	BOTTOM
B/O	BOTTOM OF
BFS	BART FACILITY STANDARDS
BLS	BLUE LIGHT STATION
BTW	BETWEEN
CIP	CAST-IN-PLACE
℄	CENTERLINE
CLG	CEILING
CLR	CLEAR
CJ	CONTROL JOINT
CMU	CONCRETE MASONRY UNIT
COL	COLUMN
CONC	CONCRETE
CONN	CONNECTION
CONT	CONTINUOUS
DBA	DEFORMED BAR ANCHOR
DET	DETAIL
DIA	DIAMETER
ø	DIAMETER
DIAG	DIAGONAL
DIM	DIMENSION
DWG	DRAWING
(E)	EXISTING
EA	EACH
EF	EACH FACE
E-W	EAST-WEST
EMBED	EMBEDMENT
EOR	ENGINEER OF RECORD
EJ	EXPANSION JOINT
ELEV	ELEVATOR
EQ	EQUAL
EQPT	EQUIPMENT
E/S	EACH SIDE
ESC	ESCALATOR
EW	EACH WAY
EXT	EXTERIOR
FOM	FACE OF MASONRY
FOC	FACE OF CONCRETE
FTG	FOOTING
FS	FAR SIDE
GA	GAUGE
GALV	GALVANIZED
HORIZ	HORIZONTAL
HSS	HOLLOW STRUCT SECTION
INFO	INFORMATION
JT(S)	JOINT(S)
KSI	KIPS PER SQUARE INCH
LBS	POUNDS
MAX	MAXIMUM
MECH	MECHANICAL
MET	METAL
MFR	MANUFACTURER

MIN	MINIMUM
MISC	MISCELLANEOUS
MTL	METAL
NS	NEAR SIDE
N-S	NORTH-SOUTH
NO/#	NUMBER
OC	ON CENTER
OH	OPPOSITE HAND
OPNG	OPENING
OPP	OPPOSITE
PL	PLATE
PJF	PREFORMED JOINT FILLER
PSI	POUNDS PER SQUARE INCH
PCF	POUNDS PER CUBIC FOOT
PSF	POUNDS PER SQUARE FOOT
POC	PEDESTRIAN OVER CROSSING
P/S	PRESTRESSED
RA	RADIUS
REF	REFERENCE
REINF	REINFORCED
REQ'D	REQUIRED
REV	REVISIONS
SF	SCHEDULE
SCHED	SQUARED FEET
SOG	SLAB ON GRADE
SAD	SEE ARCHITECTURE DRAWINGS
SIM	SIMILAR
SMS	SHEET METAL SCREW
SPEC	SPECIFICATION
STL	STEEL
STIFF	STIFFENER
TEMP	TEMPERATURE
THK	THICK
T/O	TOP OF
TOC	TOP OF CONCRETE
TOS	TOP OF STEEL
TYP	TYPICAL
UON	UNLESS OTHERWISE NOTED
VERT	VERTICAL
VSH	VERTICAL SLOTTED HOLES
W	WIDE FLANGE
W/	WITH
WGT	WEIGHT
WP	WORK POINT
WPF	WATERPROOF
f'c	SPECIFIED COMPRESSIVE STRENGTH OF STRUCTURAL CONCRETE AT 28 DAYS
fy	SPECIFIED YIELD STRENGTH OF REINFORCEMENT
f'g	SPECIFIED COMPRESSIVE STRENGTH OF CMU GROUT
fu	ULTIMATE STRENGTH OF STEEL
f'c	SPECIFIED COMPRESSIVE STREMGTH
f'm	SPECIFIED COMPRESSIVE STRENGTH OF MASONRY AT 28 DAYS

STRUCTURAL LEGEND

	INDICATES OPENING
	INDICATES BLOCKOUT
	INDICATES GRADE BREAK
	INDICATES CMU WALL
	INDICATES ONE-WAY SLAB
	INDICATES TWO-WAY SLAB SPAN
-1%	INDICATES CROSS SLOPE
	INDICATES SLOPED SURFACE
BF-1	INDICATES BRACED FRAME
W24x	INDICATES STRUCTURAL STEEL WIDE FLANGE BEAM AND SIZE
COL	INDICATES STRUCTURAL STEEL COLUMN
	INDICATES BRACE DIRECTION
L3x3x	INDICATES STRUCTURAL STEEL ANGLE AND SIZE
DO	INDICATES BEAM SIZE IDENTICAL TO ADJACENT MEMBER
	STEEL MOMENT CONNECTION
±	INDICATES AN APPROXIMATE DIMENSION OR ELEVATION. VERIFY INFORMATION AS REQUIRED TO COMPLETE CONSTRUCTION.
	INDICATES CONCRETE WALL
	INDICATES LIGHT GAGE METAL STUD BEARING WALL, SEE ARCHITECTURAL DRAWINGS

FOUNDATION AND CONCOURSE LEVEL NOTES

1. TOP OF CONCOURSE LEVEL FINISH FLOOR ELEVATION = 0'-0" TYP, UNO
2. VERIFY ALL OPENINGS AND DIMENSIONS WITH ARCHITECTURAL DRAWINGS AND OTHER DISCIPLINES.
3. REFER TO GENERAL NOTES DB-S001X.
4. CONTROL JOINTS FOR SLAB ON GRADE ARE TO BE INSTALLED @ 20' OC MAX IN 8" SLAB, 12' OC MAX IN 5" SLAB OR AS SHOWN ON PLAN. CONTROL JOINTS SHALL BE MADE BY SAWCUTTING SLAB AS SOON AS THE SURFACE IS FIRM ENOUGH SO THAT IT WILL NOT BE DAMAGED BY THE BLADE, USUALLY WITHIN 4 TO 12 HOURS AFTER THE CONCRETE HARDENS (NO LATER THAN 24 HOURS AFTER PLACEMENT). SAWCUT DEPTH SHALL BE 1 1/2". CONSTRUCTION JOINTS MAY BE INSTALLED AT THE CONTRACTOR'S OPTION.
5. VERIFY THE LOCATIONS OF ALL EXISTING UTILITIES IN THE FIELD. ALL CONTRACTORS SHALL CALL US.A., (CA. 1-800-227-2600) 48 HOURS BEFORE DIGGING. EXCAVATION FOR UNDER-GROUND FACILITIES SHALL NOT BE PERMITTED PRIOR TO UNDERGROUND SERVICE ALERT'S IDENTIFICATION OF EXISTING UTILITIES.
6. THE SIZE & LOCATION OF ALL FOOTING AND SLAB PENETRATIONS SHALL BE SUBMITTED TO EOR FOR REVIEW PRIOR TO INSTALLATION.
7. CONTRACTOR IS RESPONSIBLE FOR THE PLACEMENT OF ALL EMBEDDED ITEMS.
8. ALL DIMENSIONS ARE TO CENTERLINE OF COLUMNS OR FACE OF CONCRETE, TYP UNLESS NOTED OTHERWISE.

Santa Clara Valley Transportation Authority

____NO EXCEPTIONS TAKEN (NET)
____MAKE CORRECTIONS NOTED (MCN)
____AMEND AND RESUBMIT (A/R)

Any action shown above is subject to the terms of the contract and does not relieve the Contractor of any of its obligations under the contract, including design and detailing.

Contract No.: DB11002F

By: ____________ Date: ____________

REV	DATE	BY	SUB	APP	DESCRIPTION
0	20130710				READINESS FOR CONSTRUCTION
0	20130531				READINESS FOR CONSTRUCTION
					REPLACED C700-S-DB-S002 REV P.

DESIGNED BY J. REBER, S.E.
DRAWN BY P. DIAZ
CHECKED BY M. TARAZI
IN CHARGE M. TARAZI
DATE 20130710

REGISTERED PROFESSIONAL ENGINEER — [illegible] FUAD TARAZI — # S-3185 — EXP. 6/30/14 — STRUCTURAL — STATE OF CALIFORNIA

Skanska Shimmick Herzog
1436 California Circle
Milpitas, California 95035
A Joint Venture

MFT CONSULTING ENGINEERS, INC. Anil Verma Associates, Inc.
1773 San Pablo Ave., Suite A3 (510) 222-4106
Pinole, CA 94564 Fax (510) 222-6418
SUBMITTED

Lockwood, Andrews & Newnam, Inc. A LEO A DALY COMPANY | T·Y·LIN INTERNATIONAL
APPROVED

VTA. BART SILICON VALLEY
BART SILICON VALLEY BERRYESSA EXTENSION

LINE, TRACK, STATIONS AND SYSTEMS
DESIGN UNIT 023
MILPITAS STATION
STRUCTURAL GENERAL NOTES

SHEET 2 OF 3

CADD FILENAME C700-S-DB-S002X.dwg
SIZE D | SCALE NONE
CONTRACT NO. C700 | REV. 0
AREA CODE DB | SHEET NO. S002X | PAGE NO. 0135

cad-02 Jul 05, 2013 - 1:47pm P:\BART Berryessa Extension Line\S - STRUCTURAL MILPITAS\WORK_6-10-2012\C700-S-DB-S002X.dwg

SPECIAL INSPECTIONS

THE SSH SHALL EMPLOY A TESTING LAB & SPECIAL INSPECTOR DURING CONSTRUCTION PER THE REQUIREMENTS ON THE FOLLOWING TYPES OF WORK:

CONCRETE

- CONTINUOUSLY INSPECT THE PLACEMENT OF ALL CONCRETE EXCEPT PERIODIC INSPECTION MAY BE PROVIDED FOR THE PLACEMENT OF CONCRETE FOR:
1. FOUNDATIONS WITH f'c EQUAL TO 2500 PSI OR LESS.
2. NON-STRUCTURAL SLABS ON GRADE.
- SAMPLE CONCRETE: ASTM C172, EXCEPT SLUMP SHALL COMPLY WITH ASTM C94.
- TEST SLUMP: ASTM C143, ONE TEST AT POINT OF TRUCK DISCHARGE FOR 50 CY OR FRACTION THEREOF FOR EACH TYPE OF CONCRETE. ADDITIONAL TESTS REQUIRED WHEN CONCRETE CONSISTENCY SEEMS TO HAVE CHANGED.
- TEST AIR CONTENT: ASTM C173, VOLUMETRIC METHOD FOR LIGHTWEIGHT OR NORMAL WEIGHT CONCRETE, ONE FOR EACH 50 CY PLACED OR FRACTION THERE OF FOR EACH TYPE OF AIR-ENTRAINED CONCRETE.
- TEST CONCRETE TEMPERATURE: TEST HOURLY WHEN AIR TEMPERATURE IS 50 DEGREE F. (10 DEGREES C.) AND BELOW, AND WHEN 85 DEGREES F. (29 DEGREES C.) AND ABOVE; AND EACH TIME A SET OF COMPRESSION TEST SPECIMENS ARE MADE.
- TAKE COMPRESSION TEST SPECIMENS: ASTM C31, TAKE ONE SET OF 3 STANDARD CYLINDERS FOR EACH 50 CY OF CONCRETE OR 5000 SQ. FT SLABS & WALLS OR FRACTION THEREOF FOR EACH TYPE OF CONCRETE TAKEN EACH DAY. MOLD AND STORE CYLINDERS FOR LABORATORY CURED TEST SPECIMENS EXCEPT WHEN FIELD-CURE TEST SPECIMENS ARE REQUIRED.
- TEST COMPRESSIVE STRENGTH: ASTM C39; ONE SPECIMEN TESTED AT 7 DAYS, 14 DAYS AND AT 28 DAYS.

REINFORCING STEEL

- VERIFY THAT MILLS CERTIFICATES SHOW REINFORCING STEEL IS IN COMPLIANCE WITH PROJECT SPECIFICATIONS. TAKE A 5' LONG SAMPLE OF EACH BAR SIZE FROM EACH HEAT FOR EACH TYPE OF REINFORCING STEEL SHALL BE TESTED FOR ULTIMATE STRENGTH, YIELD STRESS, MODULUS OF ELASTICITY AND PERCENT ELONGATION AT RUPTURE.
- PERIODICALLY INSPECT THE PLACEMENT OF REINFORCING STEEL FOR SHOTCRETE AND FOR CONCRETE WHICH IS REQUIRED TO HAVE CONTINUOUS INSPECTION.
- CONTINUOUSLY INSPECT THE INSTALLATION OF ALL MECHANICAL COUPLING DEVICES.

NON-SHRINK/EXPANSIVE GROUT

- TAKE TEST SPECIMENS AND CONTINUOUSLY INSPECT THE PLACEMENT OF NON-SHRINK/EXPANSIVE GROUT. SEE SPECIFICATIONS 03 61 11.

POST-INSTALLED ANCHORS IN CONCRETE:

WHEN DRILLED-IN EXPANSION ANCHORS OR OTHER POST-INSTALLED ANCHORS ACCEPTABLE TO THE ENFORCEMENT AGENCY ARE USED IN LIEU OF CAST IN-PLACE BOLTS, THE ALLOWABLE SHEAR AND TENSION VALUES AND INSTALLATION VERIFICATION TEST LOADS SHALL BE ACCEPTABLE TO ENGINEER OF RECORD, (EOR), ARCHITECT OF RECORD (AOR), & OWNER.

WHEN EXPANSION-TYPE ANCHORS ARE LISTED FOR TRACK PLATE BOLTING APPLICATION, 10 PERCENT OF THE ANCHORS SHALL BE TENSION TESTED.

WHEN EXPANSION-TYPE ANCHORS ARE USED FOR NON-STRUCTURAL APPLICATIONS SUCH AS EQUIPMENT ANCHORAGE, 50 PERCENT OR ALTERNATE BOLTS IN A GROUP, INCLUDING AT LEAST ONE-HALF THE ANCHORS IN EACH GROUP, SHALL BE TENSION TESTED.

THE TENSION TESTING OF THE EXPANSION ANCHORS SHALL BE DONE IN THE PRESENCE OF THE SPECIAL INSPECTOR AND A REPORT OF THE TEST RESULTS SHALL BE SUBMITTED TO THE EOR, AOR AND OWNER. IF ANY ANCHORS FAIL THE TENSION-TESTING REQUIREMENTS, THE ADDITIONAL TESTING REQUIREMENTS SHALL BE ACCEPTABLE TO THE ENFORCEMENT AGENCY. THE ABOVE REQUIREMENTS SHALL ALSO APPLY TO OTHER POST-INSTALLED ANCHORS ACCEPTABLE TO THE ENFORCEMENT AGENCY AND BOLTS OR ANCHORS SET IN CONCRETE WITH CHEMICAL IF THE LONG-TERM DURABILITY AND STABILITY OF THE CHEMICAL MATERIAL AND ITS RESISTANCE TO LOSS OF STRENGTH AND CHEMICAL CHANGE AT ELEVATED TEMPERATURES ARE ESTABLISHED TO THE SATISFACTION OF THE ENFORCEMENT AGENCY.

IF ANY ANCHOR FAILS TESTING, TEST ALL ANCHORS OF THE SAME TYPE, NOT PREVIOUSLY TESTED UNTIL TWENTY (20) CONSECUTIVE ANCHORS PASS, THEN RESUME THE INITIAL TEST FREQUENCY. IF THE ANCHORS ARE USED FOR THE SUPPORT AND BRACING OF NON-STRUCTURAL COMPONENTS (PIPE, DUCT OR CONDUIT), THE TWENTY (20) SHALL BE ONLY THOSE ANCHORS INSTALLED BY THE SAME TRADE.

BOLTS INSTALLED IN CONCRETE

- PERIODICALLY INSPECT INSTALLATION OF BOLTS AND CONTINUOUSLY INSPECT PLACEMENT OF CONCRETE AROUND SUCH BOLTS.

EXPANSION ANCHORS

THE SPECIAL INSPECTOR SHALL VERIFY THE FOLLOWING AND RECORD THE INFORMATION IN THE INSPECTION REPORT:
- ANCHOR TYPE, SIZE AND DIMENSIONS
- HOLE DIMENSIONS AND CLEANLINESS
- ANCHOR SPACING
- EDGE DISTANCES
- ANCHOR EMBEDMENT
- TORQUE VALUE

TORQUE SHALL BE VERIFIED BY EITHER CONTINUOUS INSPECTION DURING TORQUING OR BY TESTING THE ANCHORS AS FOLLOWS:
50% OF ANCHORS SHALL BE TESTED USING A TORQUE-CALIBRATED WRENCH TO A MINIMUM OF TORQUE AS SPECIFIED IN THE ICC REPORT FOR THE ANCHOR. IF ANY ANCHOR FAILS TESTING, THIS PROCESS SHALL CONTINUE UNTIL 20 CONSECUTIVE ANCHORS PASS. TESTING ON THE REMAINDER OF THE ANCHORS SHALL CONTINUE AT ORIGINAL FREQUENCY.

STRUCTURAL STEEL AND MISCELLANEOUS IRON

- VERIFY THAT MILL CERTIFICATES SHOW STRUCTURAL STEEL AND MISCELLANEOUS IRON IS IN COMPLIANCE WITH PROJECT SPECIFICATIONS.

WELDING

- VERIFY WELDER CERTIFICATIONS, COMPLIANCE WITH WELDING PROCEDURE SPECIFICATIONS AND PQR (IF APPLICABLE)
- CONTINUOUSLY INSPECT ALL STRUCTURAL WELDING, INCLUDING WELDING OF REINFORCING STEEL.

EXCEPTIONS:

1. FLOOR AND ROOF DECK WELDING MAY HAVE PERIODIC INSPECTION.
2. WELDED STUDS USED FOR DIAPHRAGM OR COMPOSITE CONSTRUCTION MAY HAVE PERIODIC INSPECTION,
3. WELDED SHEET STEEL FOR COLD FORMED STEEL FRAMING MAY HAVE PERIODIC INSPECTION
4. WELDING OF STAIRS AND RAILING SYSTEMS MAY HAVE PERIODIC INSPECTION.

NONDESTRUCTIVE TESTING:

ALL COMPLETE JOINT PENETRATION WELDS ON MATERIALS 5/16" THICK AND GREATER REQUIRE ULTRASONIC TESTING.
PARTIAL JOINT PENETRATION WELDS WITH EFFECTIVE THROAT THICKNESS OF 3/4" OR GREATER REQUIRE ULTRASONIC TESTING.
WELDS ON BASE METAL THICKER THAN 1 1/2" REQUIRE ULTRASONIC TESTING

HIGH STRENGTH BOLTING

PRIOR TO BOLTING OPERATIONS:
- VERIFY THAT MILL CERTIFICATES SHOW THAT BOLTS, NUTS AND WASHERS COMPLY WITH THE PROJECT SPECIFICATIONS.
- VERIFY THAT THE METHODS OF TIGHTENING TO BE USED BY THE CONTRACTOR COMPLY WITH AISC "SPECIFICATIONS FOR STRUCTURAL JOINTS USING ASTM A325 OR A490 BOLTS", CURRENT EDITION APPROVED BY THE RESEARCH COUNCIL ON STRUCTURAL CONNECTIONS OF THE ENGINEERING FOUNDATION (RCSC) AND ENDORSED BY AISC.
- PERFORM TENSION CALIBRATION TESTS WITH THE CONTRACTOR'S TOOLS ON 3 BOLT ASSEMBLIES FOR EACH DIAMETER, LENGTH, GRADE, PRODUCTION LOT AND TIGHTENING METHOD TO BE USED ON THE PROJECT INCLUDING PRETENSIONED ANCHOR RODS. TEST SHALL BE PER RCSC SPECIFICATIONS.
- INSPECT THE FAYING SURFACES OF EACH BOLTED CONNECTION FOR COMPLIANCE WITH RCSC SPECIFICATIONS.

DURING BOLTING OPERATIONS:

- VEREIFY THAT ALL PLIES OF CONNECTED MATERIAL HAVE BEEN DRAWN TOGETHER TO A SNUG CONDITION AS DEFINED PER RCSC SPECIFICATIONS BEFORE FINAL TIGHTENING.
- VERIFY PLACEMENT OF MATCH-MARKS OR WRENCH CALIBRATION AS REQUIRED.
- CONTINUOUSLY INSPECT FINAL TIGHTENING OPERATIONS PER RCSC SPECIFICATIONS.

EXCEPTIONS:
- THE SPECIAL INNSPECTOR NEED NOT BE PRESENT DURING ALL FINAL TIGHTENING OPERATIONS PROVIDED IT CAN BE VERIFIED THAT PROPER PROCEDURES WERE FOLLOWED (I.E. THE USE OF "TWIST-OFF" TYPE BOLTS).

SPECIAL INSPECTOR

- THE SPECIAL INSPECTOR SHALL BE A QUALIFIED PERSON WHO SHALL DEMONSTRATE HIS COMPETENCE, TO EOR, AOR & OWNER, FOR INSPECTION OF A PARTICULAR TYPE OF CONSTRUCTION OR OPERATION REQUIRING SPECIAL INSPECTION.
- TESTING AND INSPECTIONS WILL BE PERFORMED BY AN INDEPENDENT TESTING LABORATORY SELECTED AND EMPLOYED BY OWNER PROCEDURAL AND ACCEPTANCE CRITERIA ARE SET FORTH IN THE 2010 CALIFORNIA BUILDING CODE.

DUTIES AND RESPONSIBILITIES OF THE SPECIAL INSPECTOR

- THE SPECIAL INSPECTOR SHALL OBSERVE THE WORK ASSIGNED FOR CONFORMANCE WITH THE APPLICABLE PROJECT DRAWINGS AND SPECIFICATIONS.
- MATERIAL REQUIRED TO BE TESTED WILL BE SELECTED BY THE TESTING LAB AND NOT BY THE CONTRACTOR.
- THE SPECIAL INSPECTOR SHALL FURNISH INSPECTION REPORTS TO THE ARCHITECT OR MANAGER, THE STRUCTURAL ENGINEER OF RECORD AND THE CONTRACTOR. ALL DISCREPANCIES SHALL BE BROUGHT IMMEDIATELY FOR CORRECTION. THEN IF UNCORRECTED, TO THE PROPER DESIGN AUTHORITY AND TO THE BUILDING OFFICIAL. TEST REPORTS SHALL BE SIGNED BY A REGISTERED CIVIL ENGINEER LICENSED IN THE STATE OF CALIFORNIA.
- THE SPECIAL INSPECTOR SHALL SUBMIT A FINAL SIGNED VERIFIED REPORT STATING WHETHER THE WORK REQUIRING SPECIAL INSPECTION WAS, TO THE BEST OF THE INSPECTOR'S KNOWLEDGE, IN CONFORMANCE WITH THE PROJECT PLANS AND SPECIFICATIONS AND THE APPLICABLE WORKMANSHIP PROVISIONS OF THE CBC.

Not For Construction

Santa Clara Valley Transportation Authority

____NO EXCEPTIONS TAKEN (NET)
____MAKE CORRECTIONS NOTED (MCN)
____AMEND AND RESUBMIT (A/R)

Any action shown above is subject to the terms of the contract and does not relieve the Contractor of any of its obligations under the contract, including design and detailing.

Contract No.: DB11002F

By: __________ Date: ________

REV	DATE	BY	SUB	APP	DESCRIPTION
0	20130710				READINESS FOR CONSTRUCTION
0	20130531				READINESS FOR CONSTRUCTION
					REPLACED C700-S-DB-S003 REV P.

DESIGNED BY J. REBER, S.E.
DRAWN BY P. DIAZ
CHECKED BY M. TARAZI
IN CHARGE M. TARAZI
DATE 20130710

REGISTERED PROFESSIONAL ENGINEER — SALAH FUAD TARAZI — # S-3185 — EXP. 6/30/14 — STRUCTURAL — STATE OF CALIFORNIA

Skanska Shimmick Herzog
1436 California Circle
Milpitas, California 95035
A Joint Venture

MFT Consulting Engineers, Inc. 1773 San Pablo Ave., Suite A3, Pinole, CA 94564 (510) 222-4106 Fax (510) 222-6418
Anil Verma Associates, Inc.
SUBMITTED

Lockwood, Andrews & Newnam, Inc. A LEO A DALY COMPANY
T·Y·LIN INTERNATIONAL
APPROVED

VTA. BART SILICON VALLEY
BART SILICON VALLEY BERRYESSA EXTENSION

LINE, TRACK, STATIONS AND SYSTEMS
DESIGN UNIT 023
MILPITAS STATION
STRUCTURAL GENERAL NOTES

SHEET 3 OF 3

CADD FILENAME C700-S-DB-S003X.dwg
SIZE D | SCALE NONE
CONTRACT NO. C700 | REV. 0
AREA CODE DB | SHEET NO. S003X | PAGE NO. 0136

cad-02 Jul 05, 2013 - 1:47pm P:\BART Berryessa Extension Line\S - STRUCTURAL MILPITAS\WORK_6-10-2012\C700-S-DB-S003X.dwg

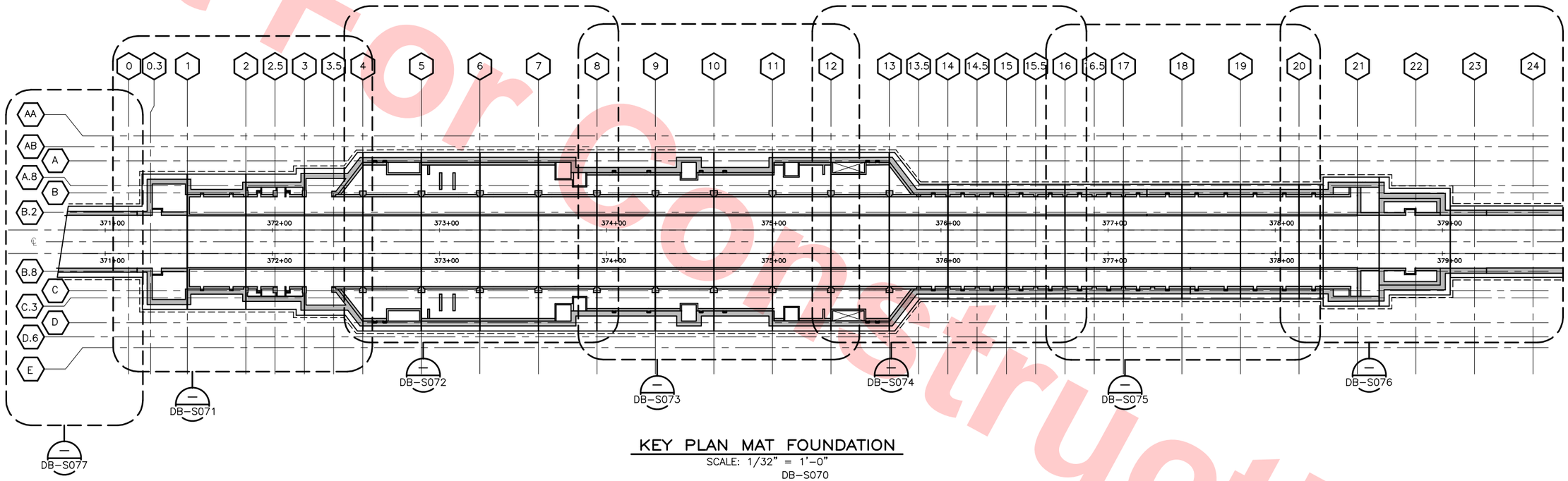

KEY PLAN MAT FOUNDATION

SCALE: 1/32" = 1'-0"

DB-S070

Not For Construction

FOR REFERENCE ONLY AND NOT FOR REVIEW.
THIS DRAWING WAS ALREADY SUBMITTED UNDER
DU23-WP08 RFC TRENCH PACKAGE.

32' 0' 32' 64'

GRAPHIC SCALE

REV	DATE	BY	SUB	APP	DESCRIPTION
0	20130531				READINESS FOR CONSTRUCTION

DESIGNED BY J. REBER, S.E.
DRAWN BY P. DIAZ
CHECKED BY M. TARAZI
IN CHARGE M. TARAZI
DATE 20130531

REGISTERED PROFESSIONAL ENGINEER NIMAN FUAD TARAZI # S 3185 EXP. 6/30/14 STRUCTURAL STATE OF CALIFORNIA

Skanska Shimmick Herzog
1436 California Circle
Milpitas, California 95035
A Joint Venture

MFT Consulting Engineers, Inc. Anil Verma Associates, Inc.
1773 San Pablo Ave., Suite A3 (510) 222-4106
Pinole, CA 94564 Fax (510) 222-6418

Lockwood, Andrews & Newnam, Inc. A LEO A DALY COMPANY
T-Y-LIN INTERNATIONAL

SUBMITTED _____
APPROVED _____

VTA BART SILICON VALLEY
BART SILICON VALLEY BERRYESSA EXTENSION

LINE, TRACK, STATIONS AND SYSTEMS
DESIGN UNIT 023
MILPITAS STATION
MAT FOUNDATION
KEY PLAN

CADD FILENAME C700-S-DB-S070.dwg
SIZE D | SCALE 1/32" = 1'-0"
CONTRACT NO. C700 | REV. 0
AREA CODE DB | SHEET NO. S070 | PAGE NO. 0137

cad-02 Jul 05, 2013 - 1:48pm P:\BART Berryessa Extension Line\S - STRUCTURAL MILPITAS\WORK_6-10-2012\C700-S-DB-S070.dwg

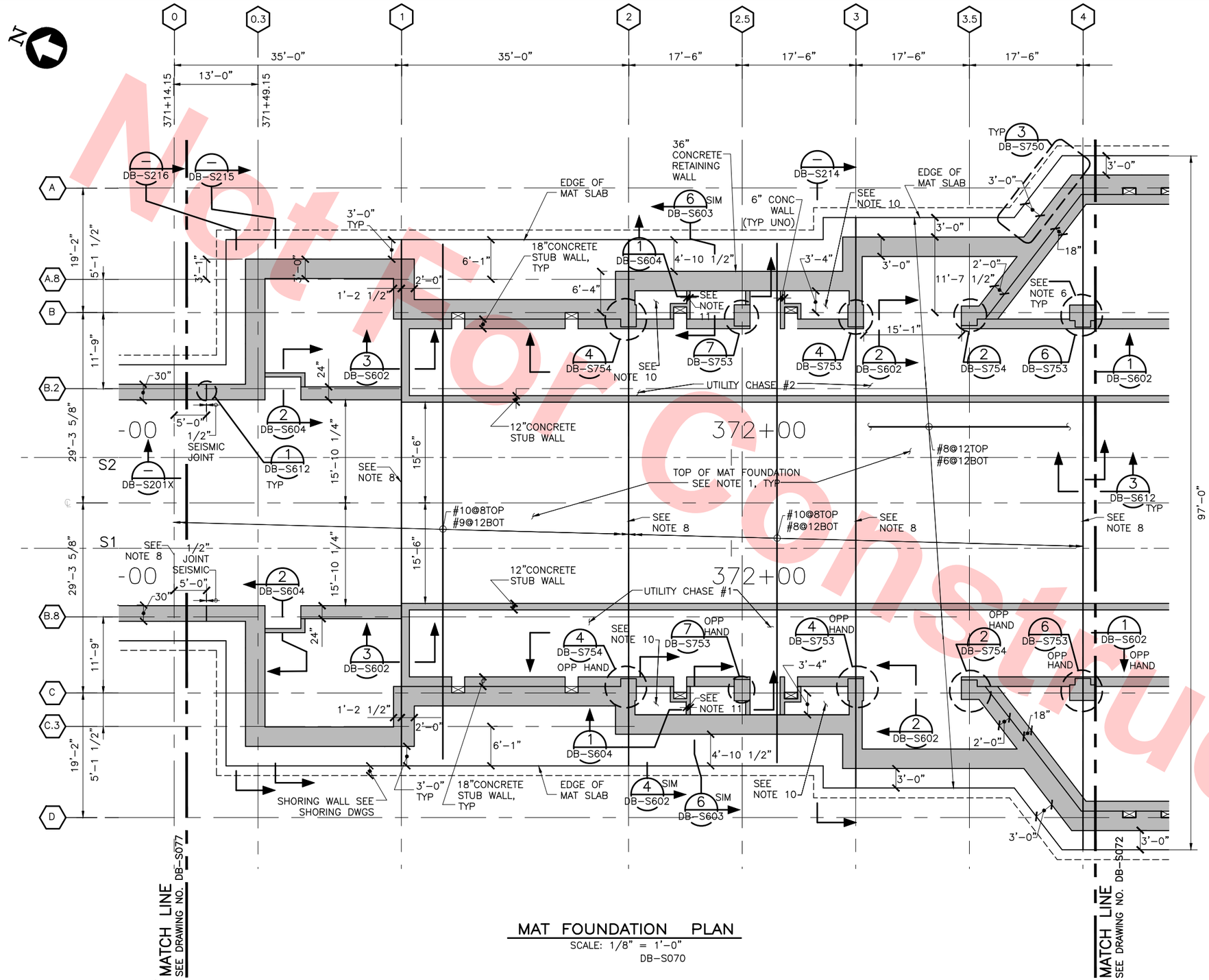

MAT FOUNDATION PLAN

SCALE: 1/8" = 1'-0"

DB-S070

NOTES:

1. TOP OF MAT FOUNDATION ELEVATION VARIES COORDINATE WITH TOP OF RAIL PROFILE SEE (2) DB-S200 AND WITH DRAWING LS-Z227.
2. VERIFY ALL OPENINGS AND DIMENSIONS WITH ARCHITECTURAL DRAWINGS.
3. THE SIZE & LOCATION OF ALL MAT FOUNDATION PENETRATIONS SHALL BE SUBMITTED TO THE EOR FOR REVIEW PRIOR TO INSTALLATION. SEE DRAWINGS (9) DB-S771
4. COORDINATE AND INSTALL ALL EMBEDDED ITEMS IN CONCRETE AS CALLED OUT ON THE DRAWINGS
5. ALL DIMENSIONS ARE TO CENTERLINE OF COLUMNS OR FACE OF CONCRETE, TYP UNLESS NOTED OTHERWISE.
6. FOR ALL COLUMN SIZES AND REINFORCING STEEL SEE DRAWING DB-S751X AND DB-S752X.
7. REFER TO GENERAL NOTES, LEGEND, AND ABBREVIATIONS ON DRAWINGS DB-S001X, DB-S002X, AND DB-S003X.
8. CONSTRUCTION JOINT PER DRAWING (3) DB-S612
9. ALL RETAINING WALL SHALL BE 36" THICK, UNO.
10. NO SLURRY CONC IN THESE AREAS, COORDINATE W/ ARCH DRAWINGS.
11. 8" CONCRETE WALL
12. FOR LOCATION OF CATCH BASIN AND DRAINAGE PIPE EMBEDDED IN THE MAT FOUNDATION, COORDINATE WITH DRAWINGS LS-C427 AND LS-C428.
13. FOR LOCATION OF CONDUITS EMBEDDED IN THE MAT FOUNDATION, COORDINATE WITH DRAWINGS DB-E021X TO DB-E026X. PLACE CONDUITS BELOW TOP LAYER REINFORCEMENT STEEL. DO NOT CUT ANY REINFORCEMENT

FOR REFERENCE ONLY AND NOT FOR REVIEW.
THIS DRAWING WAS ALREADY SUBMITTED UNDER DU23-WP08 RFC TRENCH PACKAGE.

8' 0' 8' 16'
GRAPHIC SCALE

KEY PLAN

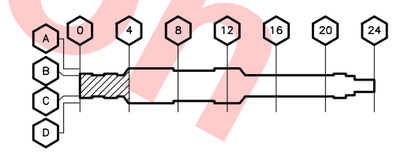

REV	DATE	BY	SUB	APP	DESCRIPTION
0	20130531				READINESS FOR CONSTRUCTION

DESIGNED BY J. REBER, S.E.
DRAWN BY P. DIAZ
CHECKED BY M. TARAZI
IN CHARGE M. TARAZI
DATE 20130531

REGISTERED PROFESSIONAL ENGINEER NIMAH FUAD TARAZI # S 3185 EXP. 6/30/14 STRUCTURAL STATE OF CALIFORNIA

Skanska Shimmick Herzog
1436 California Circle
Milpitas, California 95035
A Joint Venture

MFT CONSULTING ENGINEERS, INC. 1773 San Pablo Ave., Suite A3, Pinole, CA 94564 (510) 222-4106 Fax (510) 222-6418
Anil Verma Associates, Inc.
Lockwood, Andrews & Newnam, Inc. A LINA & BALT COMPANY
T-Y-LIN INTERNATIONAL

SUBMITTED
APPROVED

VTA BART SILICON VALLEY
BART SILICON VALLEY BERRYESSA EXTENSION

LINE, TRACK, STATIONS AND SYSTEMS
DESIGN UNIT 023
MILPITAS STATION
MAT FOUNDATION PLAN

SHEET 1 OF 7

CADD FILENAME C700-S-DB-S071.dwg
SIZE D | SCALE 1/8" = 1'-0"
CONTRACT NO. C700 | REV. 0
AREA CODE DB | SHEET NO. S071 | PAGE NO. 0138

cad-02 Jul 05, 2013 - 1:48pm P:\BART Berryessa Extension Line\S - STRUCTURAL, MILPITAS\WORK_6-10-2012\C700-S-DB-S071.dwg

Not For Construction

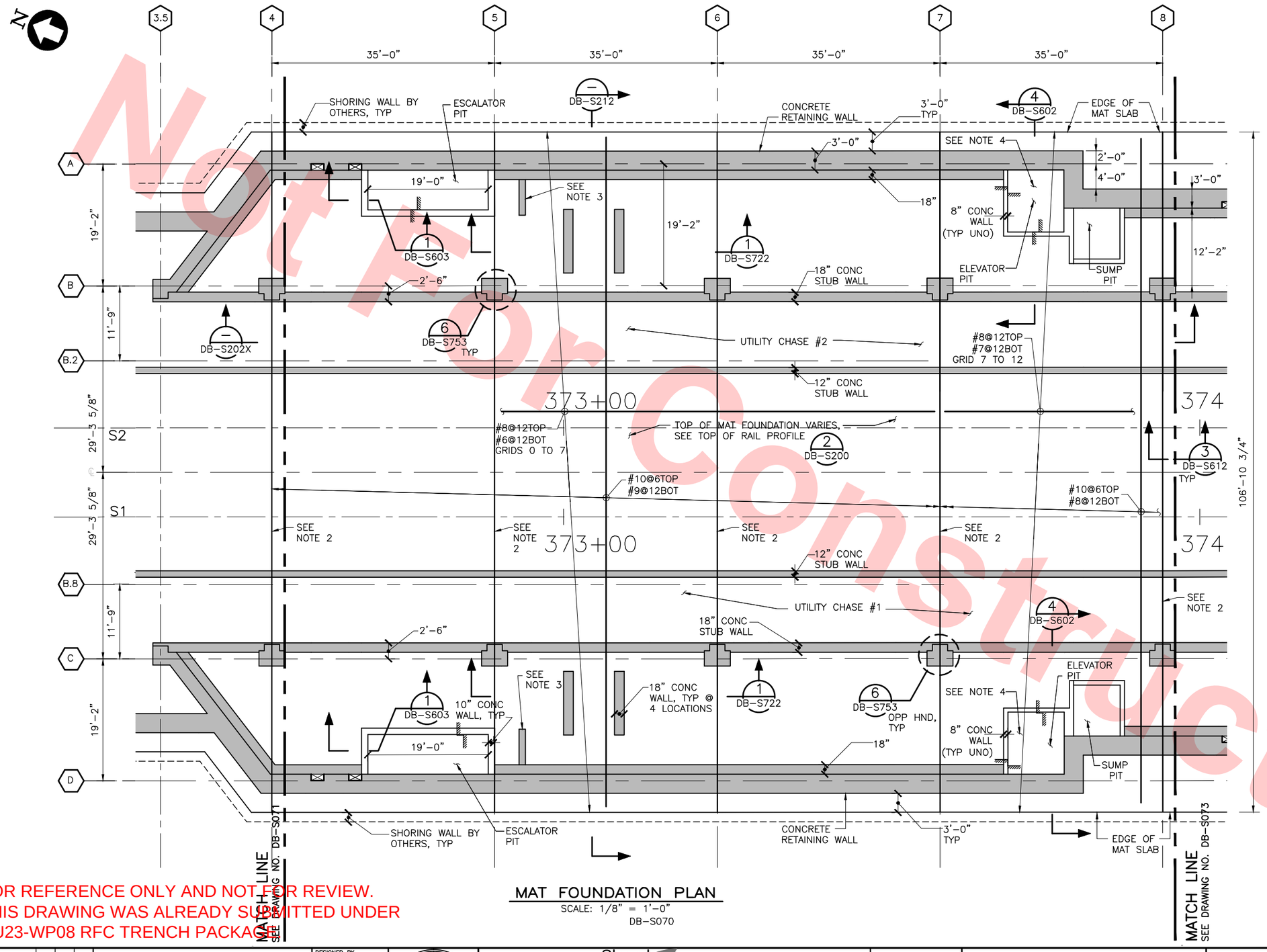

MAT FOUNDATION PLAN

SCALE: 1/8" = 1'-0"

DB-S070

NOTES:

1. FOR MAT FOUNDATION NOTES, SEE DWG NO DB-S071.
2. CONSTRUCTION JOINT PER DRAWING 3 DB-S612
3. 12" CONCRETE STUBWALL FOR ESCALATOR SUPPORT. COORDINATE LOCATION AND HEIGHT WITH ESCALATOR DRAWINGS.
4. AT ELEVATOR PIT, REFER TO ELEVATOR DRAWINGS FOR LOCATION AND ELEVATION SHAFT AND PISTON

8' 0' 8' 16'

GRAPHIC SCALE

KEY PLAN

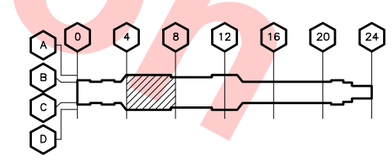

Not For Construction

FOR REFERENCE ONLY AND NOT FOR REVIEW.
THIS DRAWING WAS ALREADY SUBMITTED UNDER
DU23-WP08 RFC TRENCH PACKAGE

REV	DATE	BY	SUB	APP	DESCRIPTION
0	20130531				READINESS FOR CONSTRUCTION

DESIGNED BY J. REBER, S.E.
DRAWN BY P. DIAZ
CHECKED BY M. TARAZI
IN CHARGE M. TARAZI
DATE 20130531

REGISTERED PROFESSIONAL ENGINEER NIMAN FUAD TARAZI # S 3185 EXP. 6/30/14 STRUCTURAL STATE OF CALIFORNIA

Skanska Shimmick Herzog
1436 California Circle
Milpitas, California 95035
A Joint Venture

MFT Consulting Engineers, Inc. Anil Verma Associates, Inc.
1773 San Pablo Ave., Suite A3 (510) 222-4106
Pinole, CA 94564 Fax (510) 222-6418

Lockwood, Andrews & Newnam, Inc. A LEO A DALY COMPANY
T-Y-LIN INTERNATIONAL

SUBMITTED
APPROVED

VTA BART SILICON VALLEY
BART SILICON VALLEY BERRYESSA EXTENSION

LINE, TRACK, STATIONS AND SYSTEMS
DESIGN UNIT 023
MILPITAS STATION
MAT FOUNDATION PLAN

SHEET 2 OF 7

CADD FILENAME C700-S-DB-S072.dwg
SIZE D | SCALE 1/8" = 1'-0"
CONTRACT NO. C700 | REV. 0
AREA CODE DB | SHEET NO. S072 | PAGE NO. 0139

cad-02 Jul 05, 2013 - 1:48pm P:\BART Berryessa Extension Line\S - STRUCTURAL MILPITAS\WORK_6-10-2012\C700-S-DB-S072.dwg

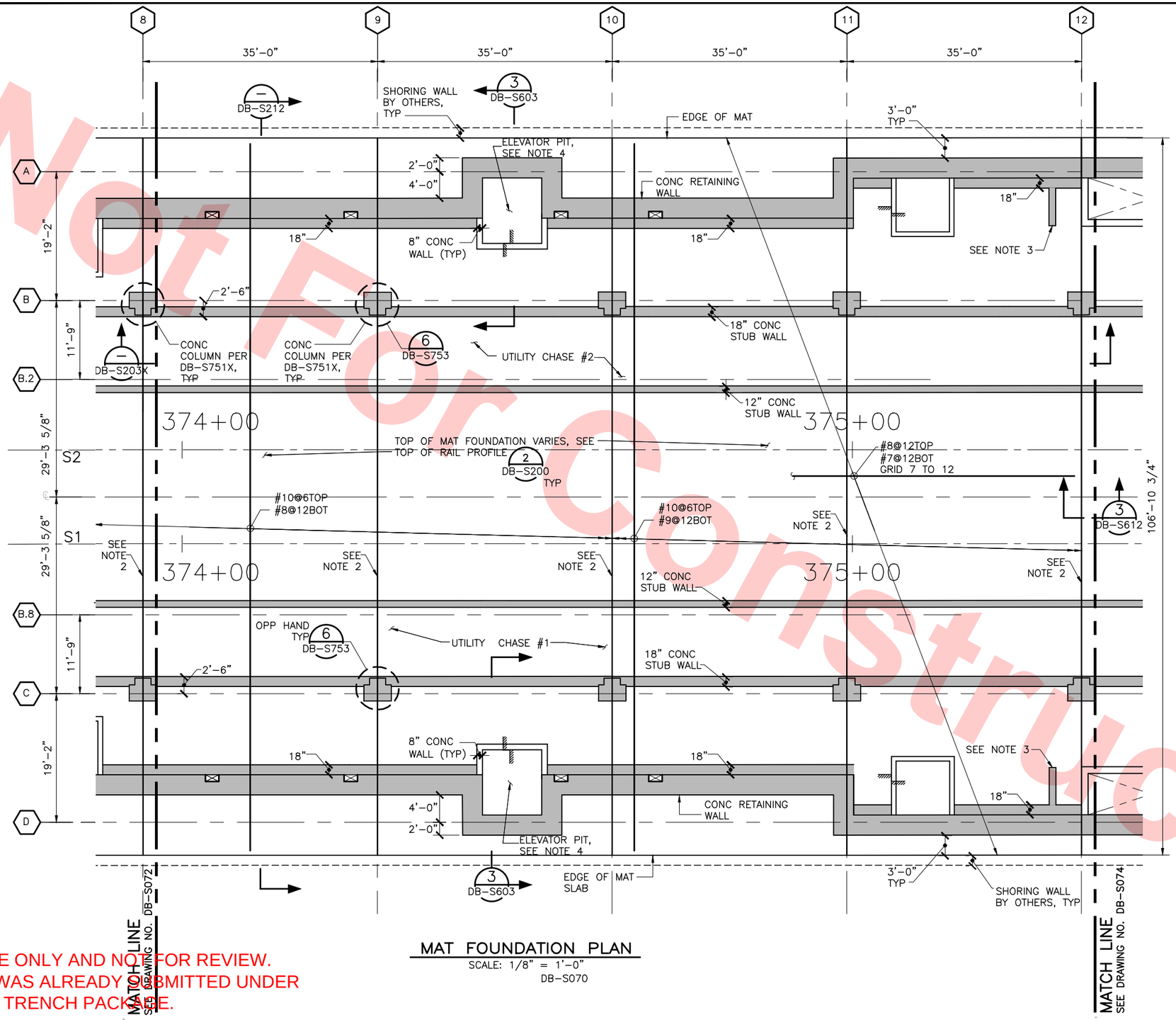

MAT FOUNDATION PLAN

SCALE: 1/8" = 1'-0"

DB-S070

NOTES:

1. FOR MAT FOUNDATION NOTES, SEE DWG NO DB-S071.
2. CONSTRUCTION JOINT PER DRAWINGS 3 DB-S612
3. 12" CONCRETE STUBWALL FOR ESCALATOR SUPPORT. COORDINATE LOCATION AND HEIGHT WITH ESCALATOR DRAWINGS.
4. AT ELEVATOR PIT, REFER TO ELEVATOR DRAWINGS FOR LOCATION AND ELEVATION SHAFT AND PISTON

8' 0' 8' 16'

GRAPHIC SCALE

KEY PLAN

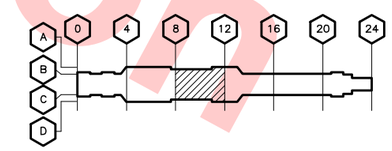

Not For Construction

FOR REFERENCE ONLY AND NOT FOR REVIEW.
THIS DRAWING WAS ALREADY SUBMITTED UNDER
DU23-WP08 RFC TRENCH PACKAGE.

REV	DATE	BY	SUB	APP	DESCRIPTION
0	20130531				READINESS FOR CONSTRUCTION

DESIGNED BY J. REBER, S.E.
DRAWN BY P. DIAZ
CHECKED BY M. TARAZI
IN CHARGE M. TARAZI
DATE 20130531

REGISTERED PROFESSIONAL ENGINEER HUMAN FUAD TARAZI # S 3185 EXP. 6/30/14 STRUCTURAL STATE OF CALIFORNIA

Skanska Shimmick Herzog
1436 California Circle
Milpitas, California 95035
A Joint Venture

MFT CONSULTING ENGINEERS, INC. Anil Verma Associates, Inc.
1773 San Pablo Ave., Suite A3 (510) 222-4106
Pinole, CA 94564 Fax (510) 222-6418

Lockwood, Andrews & Newnam, Inc. A LAN & BALY COMPANY
T-Y-LIN INTERNATIONAL

SUBMITTED
APPROVED

VTA BART SILICON VALLEY
BART SILICON VALLEY BERRYESSA EXTENSION

LINE, TRACK, STATIONS AND SYSTEMS
DESIGN UNIT 023
MILPITAS STATION
MAT FOUNDATION PLAN

SHEET 3 OF 7

CADD FILENAME C700-S-DB-S073.dwg
SIZE D | SCALE 1/8" = 1'-0"
CONTRACT NO. C700 | REV. 0
AREA CODE DB | SHEET NO. S073 | PAGE NO. 0140

cad-02 Jul 05, 2013 - 1:48pm P:\BART Berryessa Extension Line\S - STRUCTURAL MILPITAS\WORK_6-10-2012\C700-S-DB-S073.dwg

NOTES:

1. FOR MAT FOUNDATION NOTES, SEE DWG DB–S071.
2. CONSTRUCTION JOINT PER DRAWING 3 DB–S612

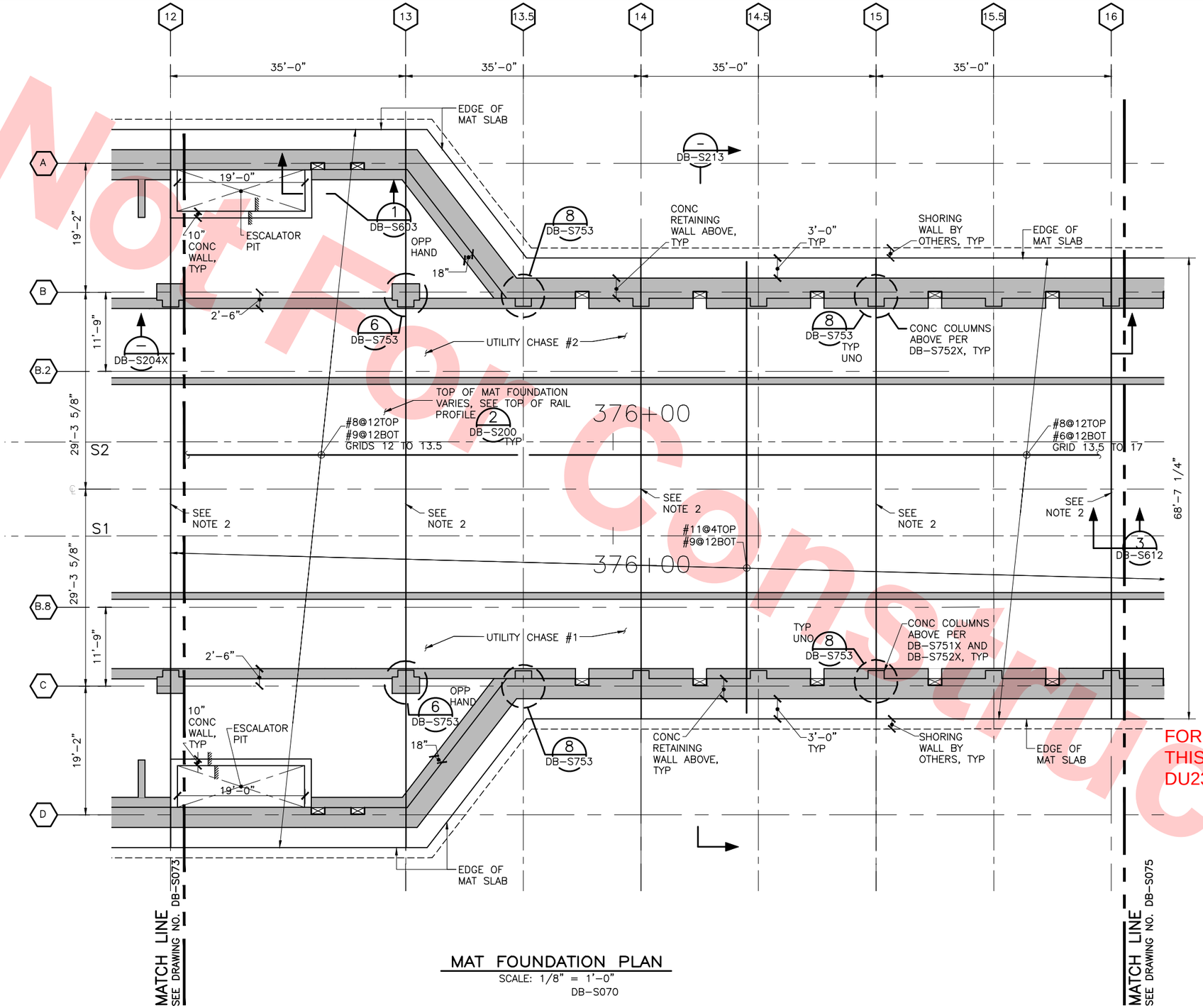

MAT FOUNDATION PLAN

SCALE: 1/8" = 1'–0"

DB–S070

Not For Construction

FOR REFERENCE ONLY AND NOT FOR REVIEW.
THIS DRAWING WAS ALREADY SUBMITTED UNDER DU23-WP08 RFC TRENCH PACKAGE.

8' 0' 8' 16'

GRAPHIC SCALE

KEY PLAN

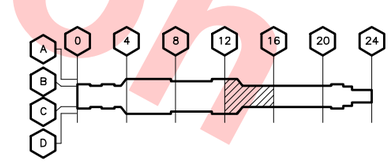

REV	DATE	BY	SUB	APP	DESCRIPTION
0	20130531				READINESS FOR CONSTRUCTION

DESIGNED BY J. REBER, S.E.
DRAWN BY P. DIAZ
CHECKED BY M. TARAZI
IN CHARGE M. TARAZI
DATE 20130531

REGISTERED PROFESSIONAL ENGINEER NORMAN FUAD TARAZI # S 3185 EXP. 6/30/14 STRUCTURAL STATE OF CALIFORNIA

Skanska Shimmick Herzog
1436 California Circle
Milpitas, California 95035
A Joint Venture

MFT Consulting Engineers, Inc. Anil Verma Associates, Inc.
1773 San Pablo Ave., Suite A3 (510) 222-4106
Pinole, CA 94564 Fax (510) 222-6418

Lockwood, Andrews & Newnam, Inc. A LAN & HALT COMPANY
T·Y·LIN INTERNATIONAL

SUBMITTED _____
APPROVED _____

VTA. BART SILICON VALLEY
BART SILICON VALLEY BERRYESSA EXTENSION

LINE, TRACK, STATIONS AND SYSTEMS
DESIGN UNIT 023
MILPITAS STATION
MAT FOUNDATION PLAN

SHEET 4 OF 7

CADD FILENAME C700–S–DB–S074.dwg
SIZE D | SCALE 1/8" = 1'–0"
CONTRACT NO. C700 | REV. 0
AREA CODE DB | SHEET NO. S074 | PAGE NO. 0141

cad–02 Jul 05, 2013 – 1:48pm P:\BART Berryessa Extension Line\S – STRUCTURAL MILPITAS\WORK_6–10–2012\C700–S–DB–S074.dwg

NOTES:

1. FOR MAT FOUNDATION NOTES, SEE DWG DB-S071.
2. CONSTRUCTION JOINT PER DRAWING 3 / DB-S612

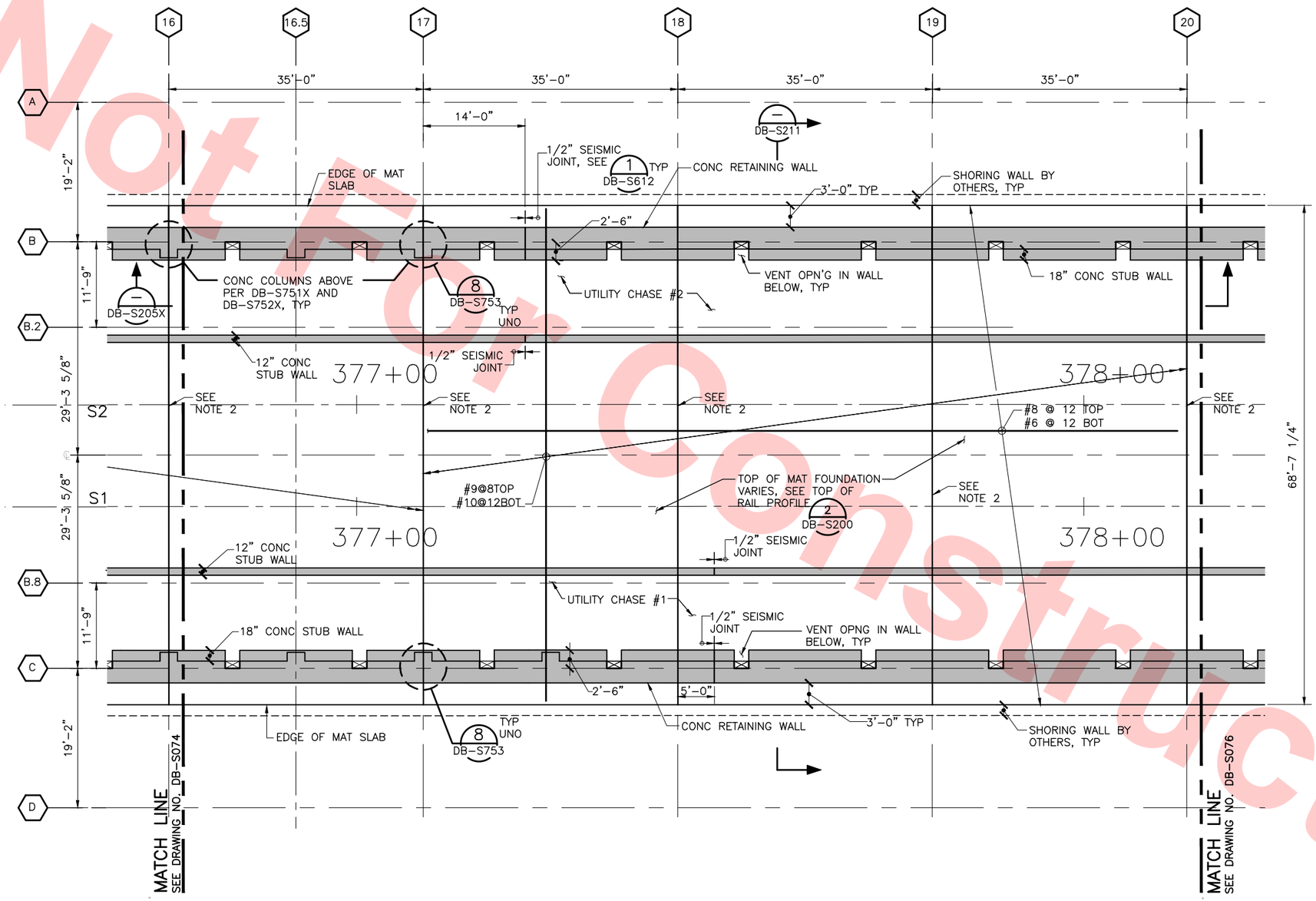

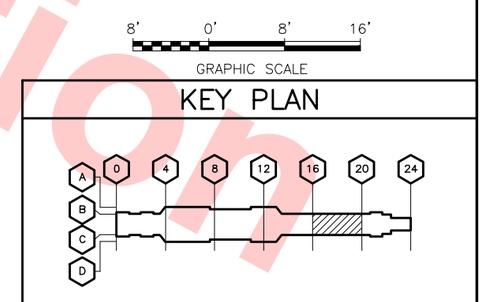

FOR REFERENCE ONLY AND NOT FOR REVIEW.
THIS DRAWING WAS ALREADY SUBMITTED UNDER DU23-WP08 RFC TRENCH PACKAGE.

MAT FOUNDATION PLAN

SCALE: 1/8" = 1'-0"

DB-S070

Not For Construction

REV	DATE	BY	SUB	APP	DESCRIPTION
0	20130531				READINESS FOR CONSTRUCTION

DESIGNED BY J. REBER, S.E.
DRAWN BY P. DIAZ
CHECKED BY M. TARAZI
IN CHARGE M. TARAZI
DATE 20130531

REGISTERED PROFESSIONAL ENGINEER NIMAN FUAD TARAZI # S 3185 EXP. 8/30/14 STRUCTURAL STATE OF CALIFORNIA

Skanska Shimmick Herzog
1436 California Circle
Milpitas, California 95035
A Joint Venture

MFT Consulting Engineers, Inc. Anil Verma Associates, Inc.
1773 San Pablo Ave., Suite A3 (510) 222-4106
Pinole, CA 94564 Fax (510) 222-6418

Lockwood, Andrews & Newnam, Inc. A LEO A DALY COMPANY
T-Y-LIN INTERNATIONAL

SUBMITTED
APPROVED

VTA BART SILICON VALLEY
BART SILICON VALLEY BERRYESSA EXTENSION

LINE, TRACK, STATIONS AND SYSTEMS
DESIGN UNIT 023
MILPITAS STATION
MAT FOUNDATION PLAN

SHEET 5 OF 7

CADD FILENAME C700-S-DB-S075.dwg
SIZE D | SCALE 1/8" = 1'-0"
CONTRACT NO. C700 | REV. 0
AREA CODE DB | SHEET NO. S075 | PAGE NO. 0142

cad-02 Jul 05, 2013 - 1:48pm P:\BART Berryessa Extension Line\S - STRUCTURAL MILPITAS\WORK_6-10-2012\C700-S-DB-S075.dwg

NOTES:

1. FOR MAT FOUNDATION NOTES, SEE DWG DB-S071.
2. LAP SPLICE SHALL BE PER SCHEDULE 1 DB-S773
3. CONSTRUCTION JOINT PER DRAWING 3 DB-S612
4. PROVIDE SLURRY CONCRETE UP TO BOTTOM OF PLATFORM SLAB

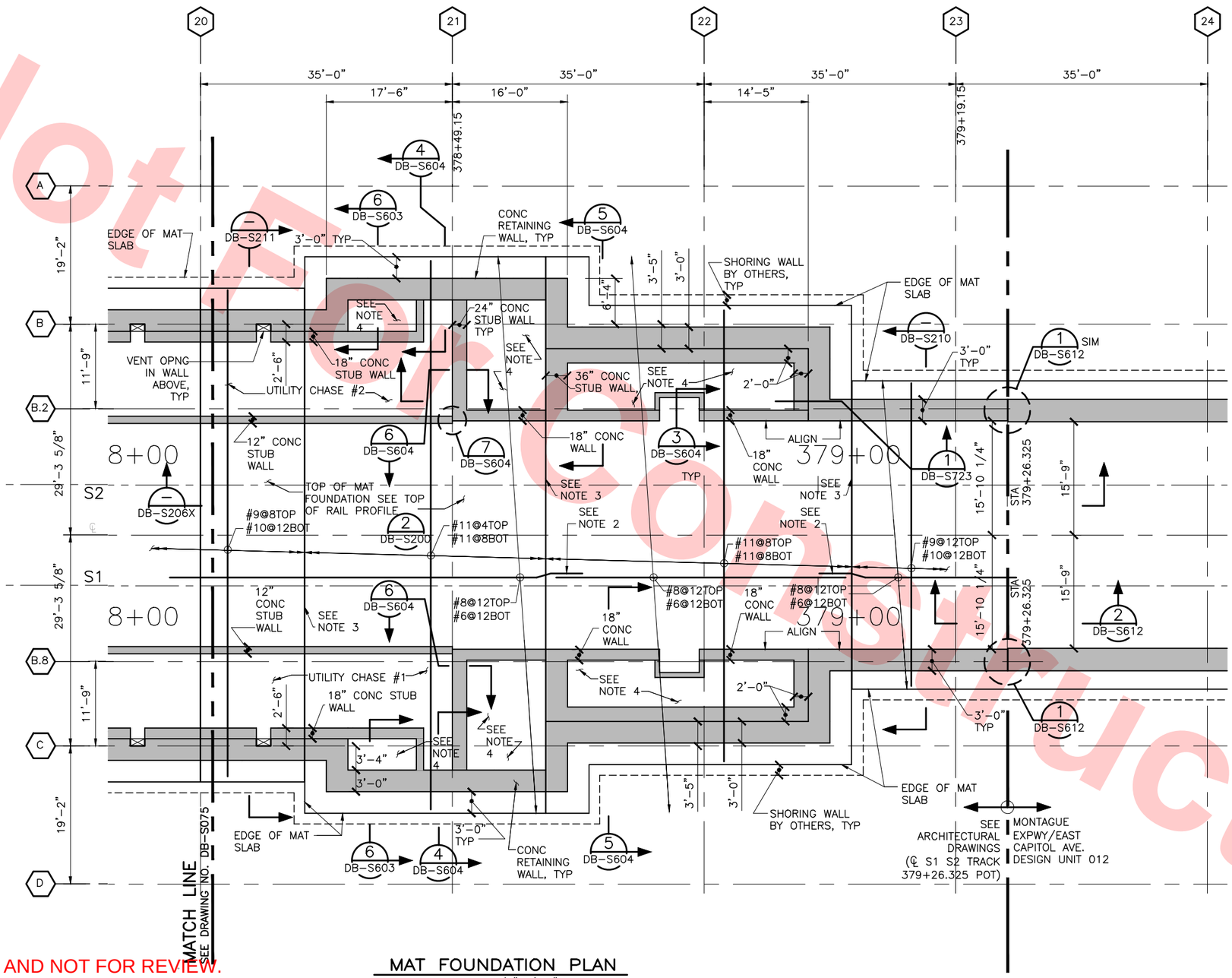

MAT FOUNDATION PLAN

SCALE: 1/8"=1'-0"

DB-S070

8' 0' 8' 16'

GRAPHIC SCALE

KEY PLAN

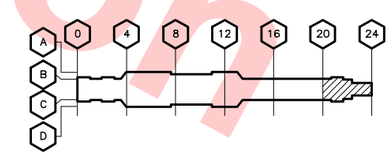

Not Recommended for Construction

FOR REFERENCE ONLY AND NOT FOR REVIEW.
THIS DRAWING WAS ALREADY SUBMITTED UNDER DU23-WP08 RFC TRENCH PACKAGE.

REV	DATE	BY	SUB	APP	DESCRIPTION
0	20130531				READINESS FOR CONSTRUCTION

DESIGNED BY J. REBER, S.E.
DRAWN BY P. DIAZ
CHECKED BY M. TARAZI
IN CHARGE M. TARAZI
DATE 20130531

REGISTERED PROFESSIONAL ENGINEER SUMAN FUAD TARAZI # S 3185 EXP. 6/30/14 STRUCTURAL STATE OF CALIFORNIA

Skanska Shimmick Herzog
1436 California Circle
Milpitas, California 95035
A Joint Venture

MFT Consulting Engineers, Inc. Anil Verma Associates, Inc.
1773 San Pablo Ave., Suite A3 (510) 222-4106
Pinole, CA 94564 Fax (510) 222-6418

Lockwood, Andrews & Newnam, Inc. A LEO A DALY COMPANY
T-Y-LIN INTERNATIONAL

SUBMITTED
APPROVED

VTA BART SILICON VALLEY
BART SILICON VALLEY BERRYESSA EXTENSION

LINE, TRACK, STATIONS AND SYSTEMS
DESIGN UNIT 023
MILPITAS STATION
MAT FOUNDATION PLAN

SHEET 6 OF 7

CADD FILENAME C700-S-DB-S076.dwg
SIZE D | SCALE 1/8" = 1'-0"
CONTRACT NO. C700 | REV. 0
AREA CODE DB | SHEET NO. S076 | PAGE NO. 0143

cad-02 Jul 05, 2013 - 1:48pm P:\BART Berryessa Extension Line\S - STRUCTURAL MILPITAS\WORK_6-10-2012\C700-S-DB-S076.dwg

NOTES:

1. FOR MAT FOUNDATION NOTES, SEE DWG NO DB-S071
2. CONSTRUCTION JOINT PER DWG NO 3 / DB-S612

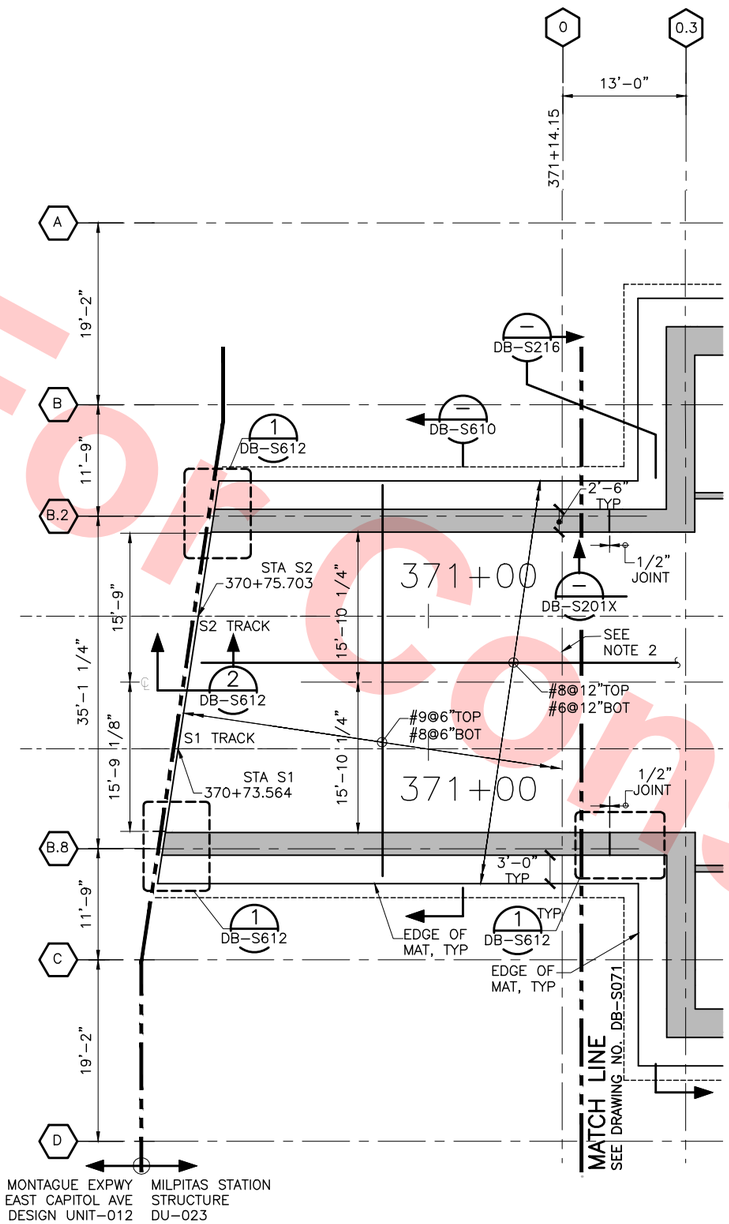

MAT FOUNDATION PLAN

SCALE: 1/8" = 1'-0"

DB-S070

8' 0' 8' 16'

GRAPHIC SCALE

KEY PLAN

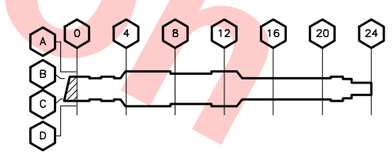

FOR REFERENCE ONLY AND NOT FOR REVIEW.
THIS DRAWING WAS ALREADY SUBMITTED UNDER
DU23-WP08 RFC TRENCH PACKAGE.

Not For Construction

REV	DATE	BY	SUB	APP	DESCRIPTION
0	20130531				READINESS FOR CONSTRUCTION

DESIGNED BY J. REBER, S.E.
DRAWN BY P. DIAZ
CHECKED BY M. TARAZI
IN CHARGE M. TARAZI
DATE 20130531

REGISTERED PROFESSIONAL ENGINEER NIRMAN FUAD TARAZI # S 3185 EXP. 6/30/14 STRUCTURAL STATE OF CALIFORNIA

Skanska Shimmick Herzog
1436 California Circle
Milpitas, California 95035
A Joint Venture

MFT Consulting Engineers, Inc. Anil Verma Associates, Inc.
1773 San Pablo Ave., Suite A3 (510) 222-4106
Pinole, CA 94564 Fax (510) 222-6418

Lockwood, Andrews & Newnam, Inc. A LEO A DALY COMPANY
T-Y-LIN INTERNATIONAL

SUBMITTED _____ APPROVED _____

VTA BART SILICON VALLEY

BART SILICON VALLEY BERRYESSA EXTENSION

LINE, TRACK, STATIONS AND SYSTEMS
DESIGN UNIT 023
MILPITAS STATION
MAT FOUNDATION PLAN

SHEET 7 OF 7

CADD FILENAME C700-S-DB-S077.dwg
SIZE D | SCALE 1/8" = 1'-0"
CONTRACT NO. C700 | REV. 0
AREA CODE DB | SHEET NO. S077 | PAGE NO. 0144

cad-02 Jul 05, 2013 - 1:48pm P:\BART Berryessa Extension Line\S - STRUCTURAL MILPITAS\WORK_6-10-2012\C700-S-DB-S077.dwg

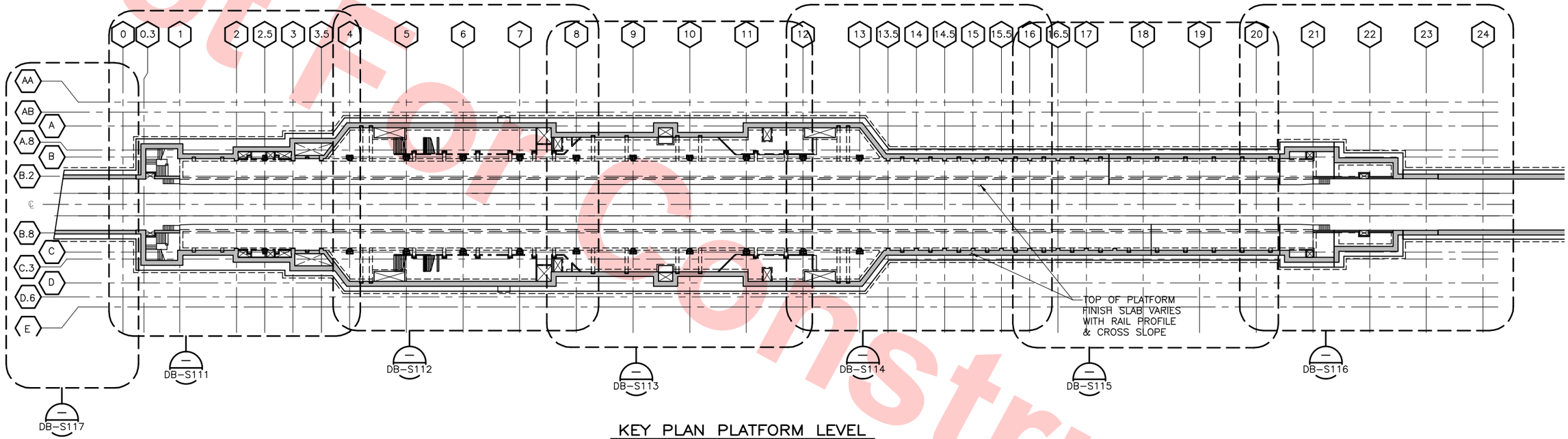

KEY PLAN PLATFORM LEVEL

SCALE: 1/32" = 1'-0"

Not For Construction

FOR REFERENCE ONLY AND NOT FOR REVIEW.
THIS DRAWING WAS ALREADY SUBMITTED UNDER
DU23-WP08 RFC TRENCH PACKAGE.

32' 0' 32' 64'
GRAPHIC SCALE

REV	DATE	BY	SUB	APP	DESCRIPTION
0	20130531				READINESS FOR CONSTRUCTION
					REPLACED C700-S-DB-S100 REV P.

DESIGNED BY J. REBER, S.E.
DRAWN BY P. DIAZ
CHECKED BY M. TARAZI
IN CHARGE M. TARAZI
DATE 20130531

REGISTERED PROFESSIONAL ENGINEER NIMAH FUAD TARAZI # S 3185 EXP. 6/30/14 STRUCTURAL STATE OF CALIFORNIA

Skanska Shimmick Herzog
1436 California Circle
Milpitas, California 95035
A Joint Venture

MFT Consulting Engineers, Inc. Anil Verma Associates, Inc.
1773 San Pablo Ave., Suite A3 (510) 222-4106
Pinole, CA 94564 Fax (510) 222-6418

Lockwood, Andrews & Newnam, Inc. A LINA A. RALY COMPANY
T-Y-LIN INTERNATIONAL

SUBMITTED _____
APPROVED _____

VTA BART SILICON VALLEY
BART SILICON VALLEY BERRYESSA EXTENSION

LINE, TRACK, STATIONS AND SYSTEMS
DESIGN UNIT 023
MILPITAS STATION
PLATFORM LEVEL
KEY PLAN

CADD FILENAME C700-S-DB-S110.dwg
SIZE D | SCALE 1/32" = 1'-0"
CONTRACT NO. C700 | REV. 0
AREA CODE DB | SHEET NO. S110 | PAGE NO. 0145

cad-02 Jul 05, 2013 - 1:48pm P:\BART Berryessa Extension Line\S - STRUCTURAL MILPITAS\WORK_6-10-2012\C700-S-DB-S110.dwg

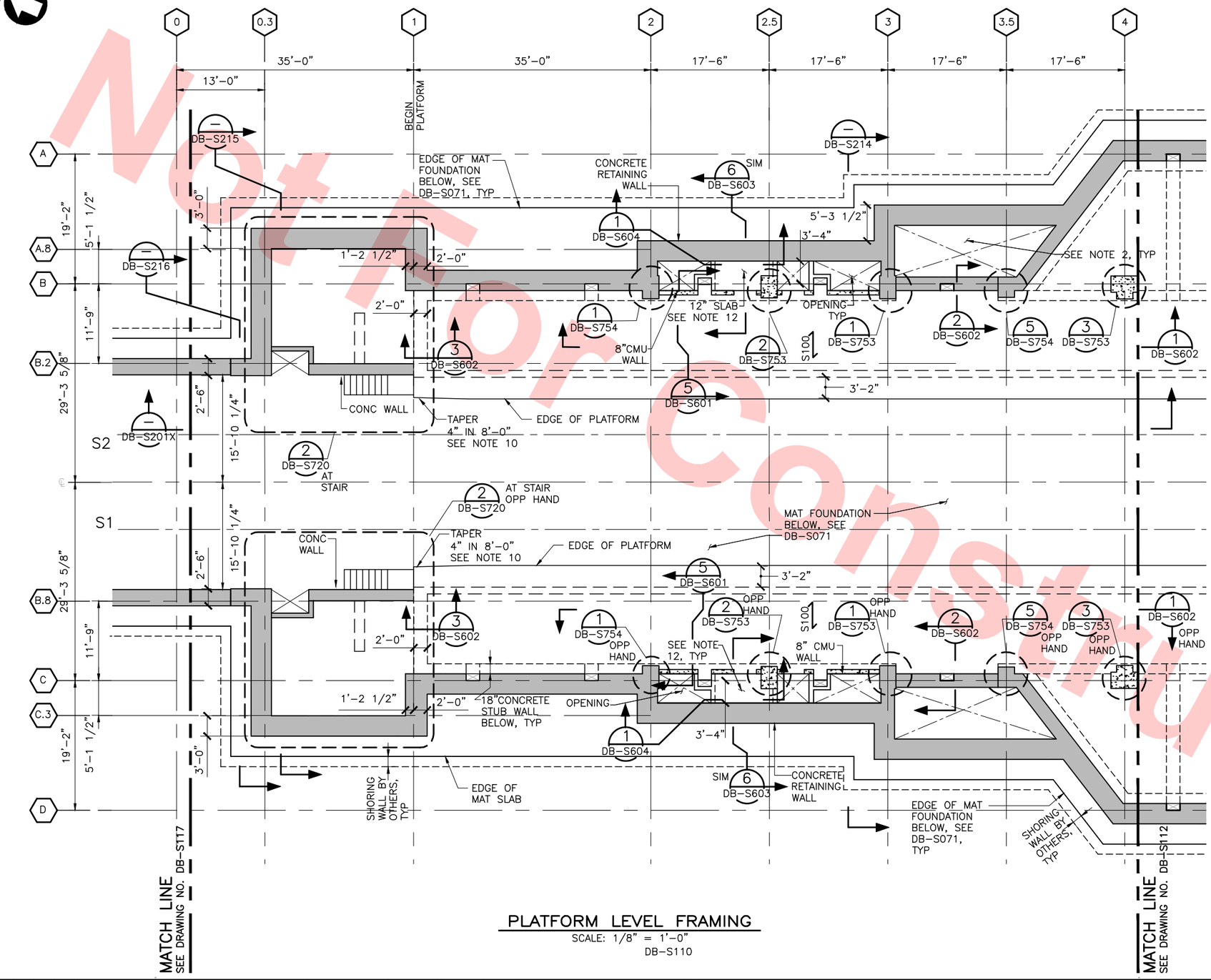

PLATFORM LEVEL FRAMING

SCALE: 1/8" = 1'-0"

DB-S110

NOTES:

1. TOP OF PLATFORM LEVEL FINISH FLOOR ELEVATION VARIES WITH TOP OF PROFILE AND CROSS SLOPE.
2. VERIFY ALL OPENINGS AND DIMENSIONS WITH ARCHITECTURAL DRAWINGS.
3. REFER TO GENERAL NOTES, LEGEND, AND ABBREVIATIONS ON DRAWINGS DB-S001X, DB-S002X, AND DB-S003X
4. CONTROL JOINTS ARE TO BE INSTALLED @ 20' OC MAX IN 8" SLAB, 12' OC MAX IN 5" SLAB OR AS SHOWN ON PLAN. CONTROL JOINTS SHALL BE MADE BY SAWCUTTING SLAB AS SOON AS THE SURFACE IS FIRM ENOUGH SO THAT IT WILL NOT BE DAMAGED BY THE BLADE, USUALLY WITHIN 4 TO 12 HOURS AFTER THE CONCRETE HARDENS (NO LATER THAN 24 HOURS AFTER PLACEMENT). SAWCUT DEPTH SHALL BE 1 1/2". CONSTRUCTION JOINTS MAY BE INSTALLED AT THE CONTRACTOR'S OPTION.
5. THE SIZE & LOCATION OF ALL FOOTING AND SLAB PENETRATIONS SHALL BE SUBMITTED TO THE EOR FOR REVIEW PRIOR TO INSTALLATION.
6. CONTRACTOR IS RESPONSIBLE FOR THE PLACEMENT OF ALL EMBEDDED ITEMS.
7. ALL DIMENSIONS ARE TO CENTERLINE OF COLUMNS OR FACE OF CONCRETE, TYP UNLESS NOTED OTHERWISE.
8. FOR FOOTINGS, DENOTED SEE SCHEDULE AND DETAILS ON DRAWING DB-S750.
9. FOR SUPPORTED SLABS, DENOTED SEE SCHEDULE & DETAILS ON DRAWINGS DB-S761, DB-S762 & DB-S763. THE SYMBOL INDICATES THE DIRECTION OF THE MAIN REINFORCING.
10. SEE BART STANDARD DETAIL 5/AS42
11. 12" NORMAL WEIGHT CONC SLAB W/#4@16"OC TOP & BOT, EA WAY.
12. 12" CONC SLAB REINF W/#6@12" OC EACH WAY
13. FOR ALL CONCRETE COLUMNS: SIZE AND REINFORCEMENT SEE DB-751X AND DB-752X TYPICAL FOR ALL SHEETS

Not For Construction

FOR REFERENCE ONLY AND NOT FOR REVIEW.
THIS DRAWING WAS ALREADY SUBMITTED UNDER DU23-WP08 RFC TRENCH PACKAGE.

8' 0' 8' 16'
GRAPHIC SCALE

KEY PLAN

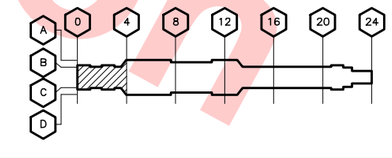

REV	DATE	BY	SUB	APP	DESCRIPTION
0	20130531				READINESS FOR CONSTRUCTION REPLACED C700-S-DB-S101 REV P.

DESIGNED BY J. REBER, S.E.
DRAWN BY P. DIAZ
CHECKED BY M. TARAZI
IN CHARGE M. TARAZI
DATE 20130531

REGISTERED PROFESSIONAL ENGINEER MUHAMMAD FUAD TARAZI # S 3185 EXP. 6/30/14 STRUCTURAL STATE OF CALIFORNIA

Skanska Shimmick Herzog
1436 California Circle Milpitas, California 95035
A Joint Venture

MFT Consulting Engineers, Inc. Anil Verma Associates, Inc.
1773 San Pablo Ave., Suite A3 Pinole, CA 94564 (510) 222-4106 Fax (510) 222-6418

Leakwood, Andrews & Newnam, Inc. A LEO A DALY COMPANY | T-Y-LIN INTERNATIONAL

SUBMITTED _____ APPROVED _____

BART SILICON VALLEY BERRYESSA EXTENSION

LINE, TRACK, STATIONS AND SYSTEMS
DESIGN UNIT 023
MILPITAS STATION
PLATFORM LEVEL
FRAMING PLAN
SHEET 1 OF 7

CADD FILENAME C700-S-DB-S111.dwg
SIZE D | SCALE 1/8" = 1'-0"
CONTRACT NO. C700 | REV. 0
AREA CODE DB | SHEET NO. S111 | PAGE NO. 0146

cad-02 Jul 05, 2013 - 1:48pm P:\BART Berryessa Extension Line\S - STRUCTURAL MILPITAS\WORK_6-10-2012\C700-S-DB-S111.dwg

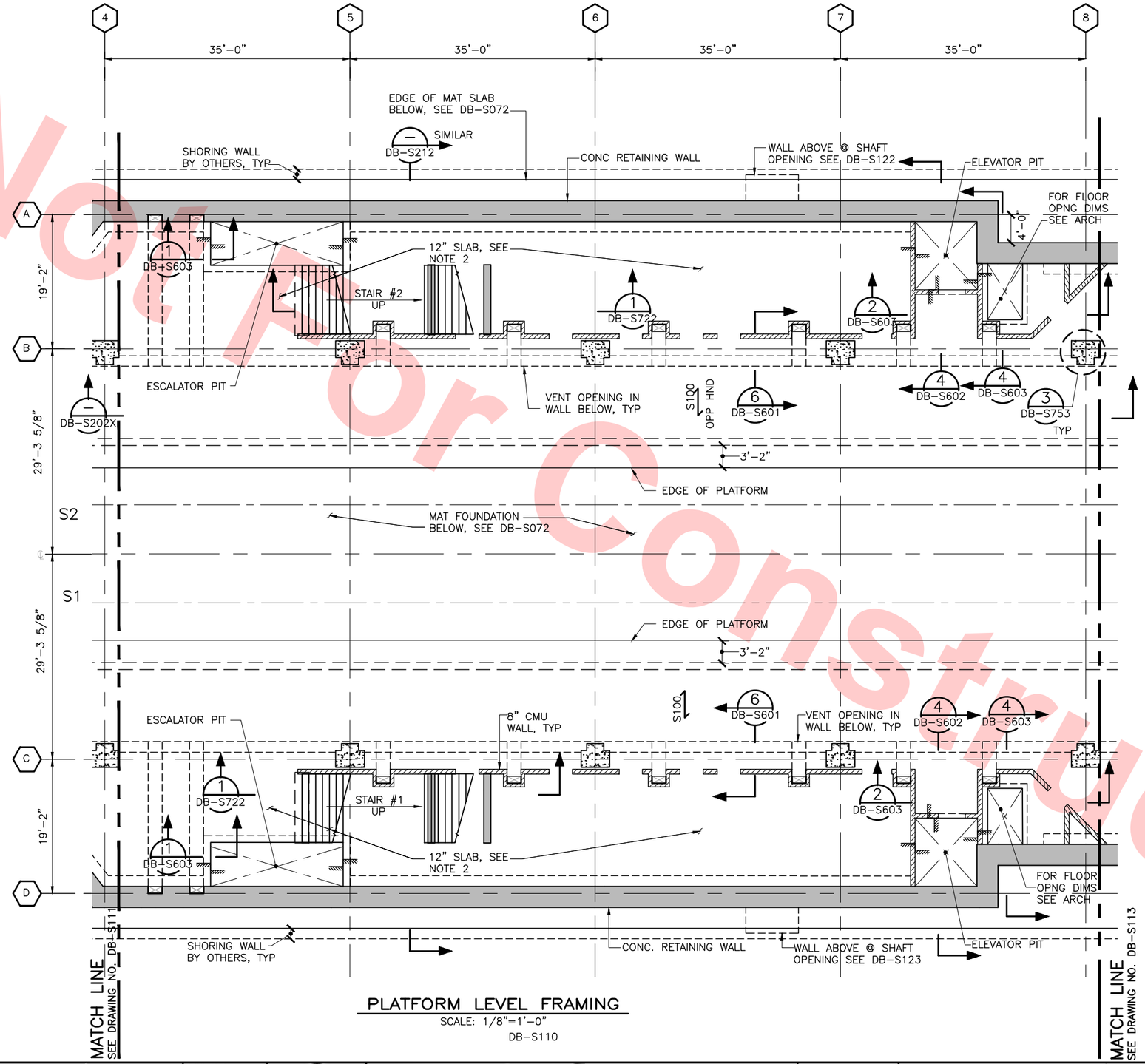

PLATFORM LEVEL FRAMING

SCALE: 1/8"=1'-0"

DB-S110

NOTES:

1. FOR PLATFORM LEVEL FRAMING NOTES, SEE DWG DB-S111.
2. 12" NORMAL WEIGHT CONC SLAB W/#4@16"OC TOP & BOT, EA WAY
3. FOR SUPPORTED SLABS, DENOTED S3 SEE SCHEDULE & DETAILS ON DRAWINGS DB-S761 & DB-S762.

FOR REFERENCE ONLY AND NOT FOR REVIEW.
THIS DRAWING WAS ALREADY SUBMITTED UNDER DU23-WP08 RFC TRENCH PACKAGE.

8' 0' 8' 16'

GRAPHIC SCALE

KEY PLAN

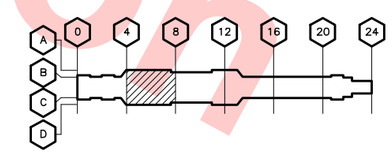

Not For Construction

REV	DATE	BY	SUB	APP	DESCRIPTION
0	20130531				READINESS FOR CONSTRUCTION REPLACED C700-S-DB-S102 REV P.

DESIGNED BY J. REBER, S.E.
DRAWN BY P. DIAZ
CHECKED BY M. TARAZI
IN CHARGE M. TARAZI
DATE 20130531

REGISTERED PROFESSIONAL ENGINEER HUMAN FUAD TARAZI # S 3185 EXP. 6/30/14 STRUCTURAL STATE OF CALIFORNIA

Skanska Shimmick Herzog
1436 California Circle
Milpitas, California 95035
A Joint Venture

MFT CONSULTING ENGINEERS, INC. Anil Verma Associates, Inc.
1773 San Pablo Ave., Suite A3 (510) 222-4106
Pinole, CA 94564 Fax (510) 222-6418

Lockwood, Andrews & Newnam, Inc. A LEO A DALY COMPANY
T·Y·LIN INTERNATIONAL

SUBMITTED
APPROVED

BART SILICON VALLEY
BART SILICON VALLEY BERRYESSA EXTENSION

LINE, TRACK, STATIONS AND SYSTEMS
DESIGN UNIT 023
MILPITAS STATION
PLATFORM LEVEL
FRAMING PLAN
SHEET 2 OF 7

CADD FILENAME C700-S-DB-S11.dwg
SIZE D
SCALE 1/8" = 1'-0"
CONTRACT NO. C700
REV. 0
AREA CODE DB
SHEET NO. S112
PAGE NO. 0147

cad-02 Jul 05, 2013 - 1:48pm P:\BART Berryessa Extension Line\S - STRUCTURAL MILPITAS\WORK_6-10-2012\C700-S-DB-S112.dwg

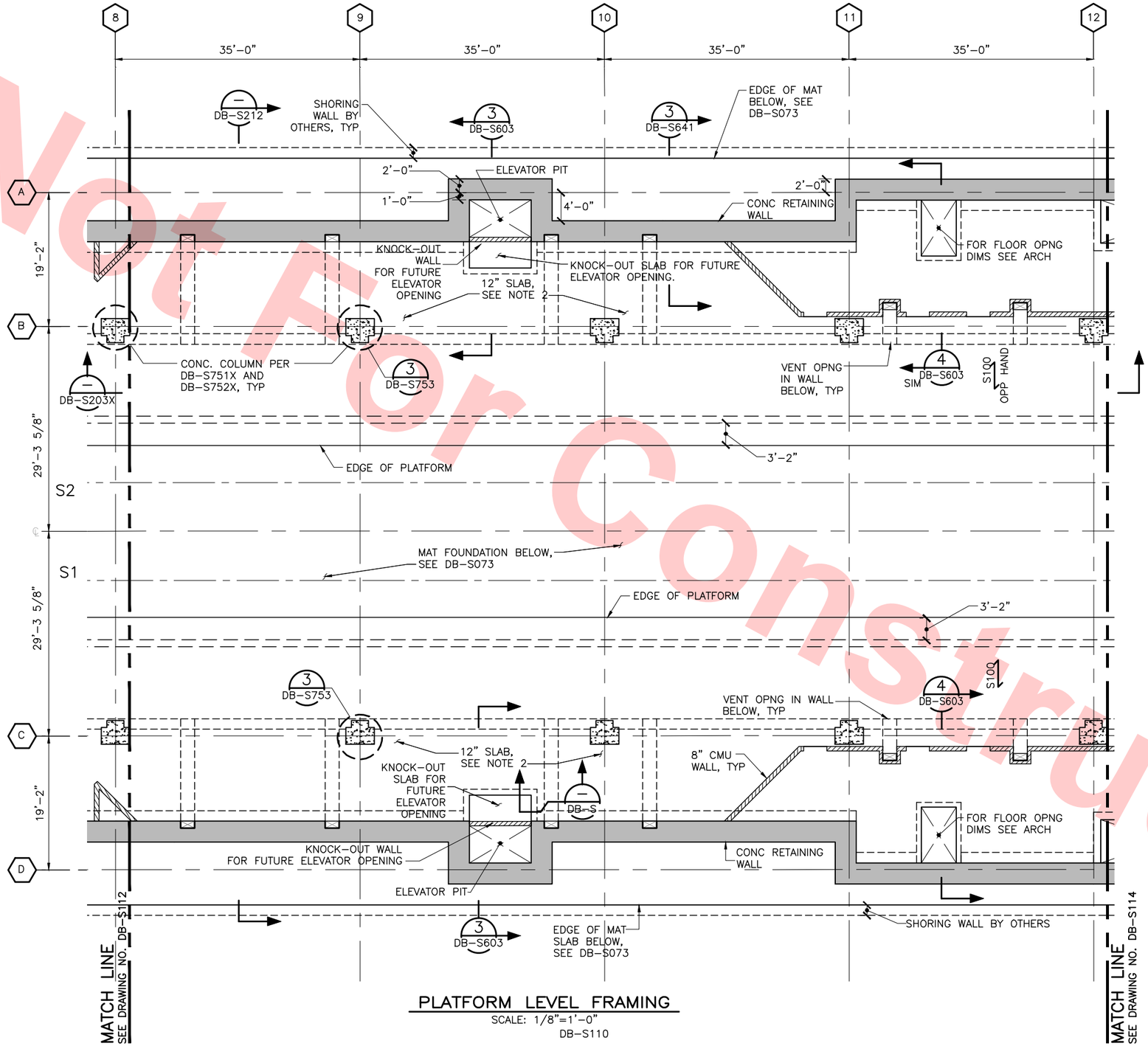

PLATFORM LEVEL FRAMING

SCALE: 1/8"=1'-0"

DB-S110

NOTES:

1. FOR PLATFORM LEVEL FRAMING NOTES, SEE DWG DB-S111.
2. 12" NORMAL WEIGHT CONC SLAB W/#4@16"OC TOP & BOT, EA WAY

FOR REFERENCE ONLY AND NOT FOR REVIEW. THIS DRAWING WAS ALREADY SUBMITTED UNDER DU23-WP08 RFC TRENCH PACKAGE.

8' 0' 8' 16'

GRAPHIC SCALE

KEY PLAN

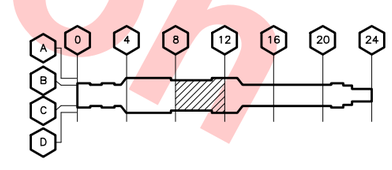

Not For Construction

REV	DATE	BY	SUB	APP	DESCRIPTION
0	20130531				READINESS FOR CONSTRUCTION
					REPLACED C700-S-DB-S103 REV P.

DESIGNED BY J. REBER, S.E.
DRAWN BY P. DIAZ
CHECKED BY M. TARAZI
IN CHARGE M. TARAZI
DATE 20130531

REGISTERED PROFESSIONAL ENGINEER MINAH FUAD TARAZI # S 3185 EXP. 6/30/14 STRUCTURAL STATE OF CALIFORNIA

Skanska Shimmick Herzog
1436 California Circle
Milpitas, California 95035
A Joint Venture

MFT Consulting Engineers, Inc. 1773 San Pablo Ave., Suite A3 Pinole, CA 94564 (510) 222-4106 Fax (510) 222-6418
Anil Verma Associates, Inc.
Lockwood, Andrews & Newnam, Inc. A LINA & HALY COMPANY
T-Y-LIN INTERNATIONAL

SUBMITTED
APPROVED

VTA BART SILICON VALLEY
BART SILICON VALLEY BERRYESSA EXTENSION

LINE, TRACK, STATIONS AND SYSTEMS
DESIGN UNIT 023
MILPITAS STATION
PLATFORM LEVEL
FRAMING PLAN
SHEET 3 OF 7

CADD FILENAME C700-S-DB-S113.dwg
SIZE D | SCALE 1/8" = 1'-0"
CONTRACT NO. C700 | REV. 0
AREA CODE DB | SHEET NO. S113 | PAGE NO. 0148

cad-02 Jul 05, 2013 - 1:49pm P:\BART Berryessa Extension Line\S - STRUCTURAL, MILPITAS\WORK_6-10-2012\C700-S-DB-S113.dwg

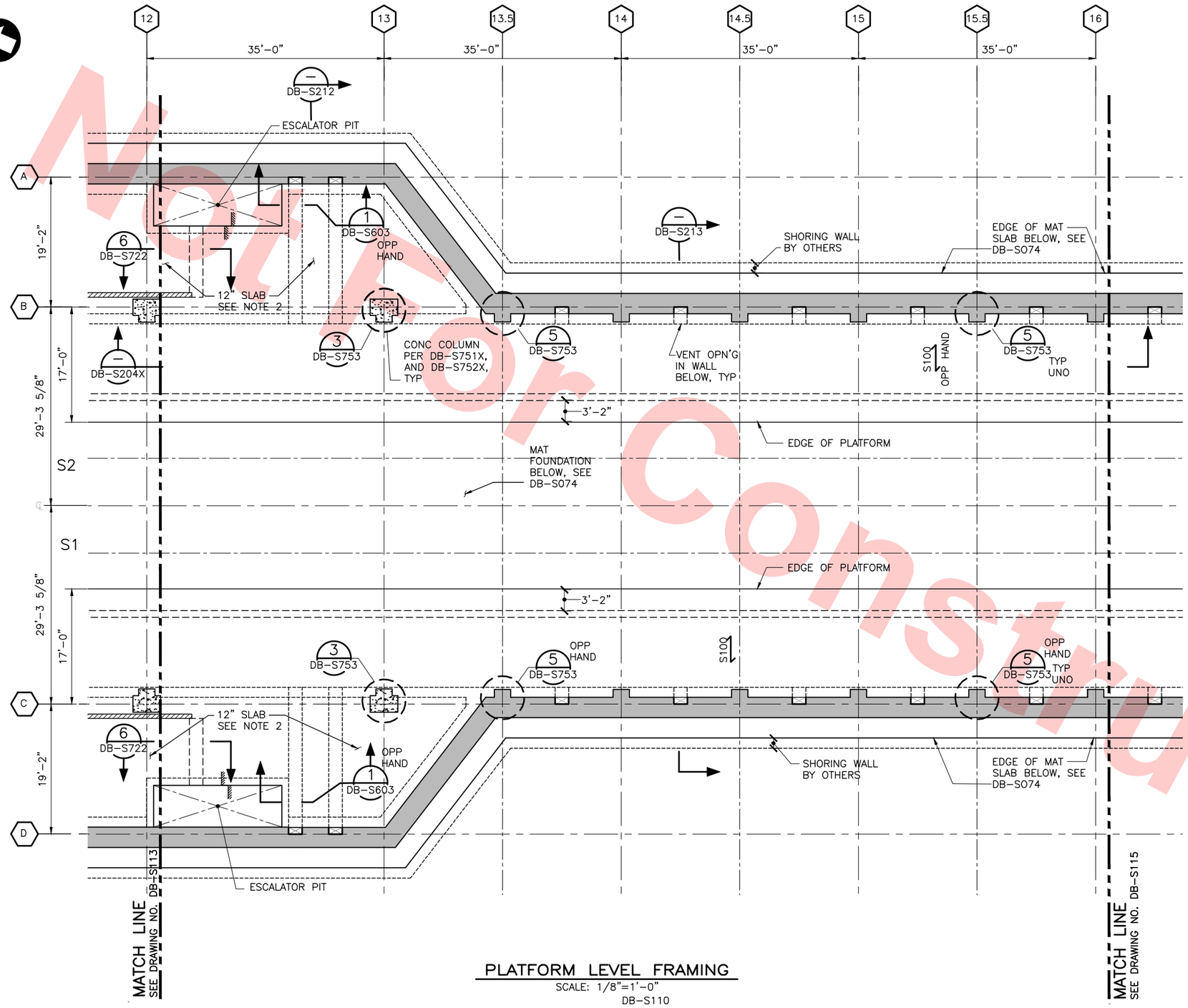

PLATFORM LEVEL FRAMING

SCALE: 1/8"=1'-0"

DB-S110

NOTES:

1. FOR PLATFORM LEVEL FRAMING NOTES, SEE DWG DB-S111.
2. 12" NORMAL WEIGHT CONC SLAB W/#4@16"OC TOP & BOT, EA WAY.

FOR REFERENCE ONLY AND NOT FOR REVIEW. THIS DRAWING WAS ALREADY SUBMITTED UNDER DU23-WP08 RFC TRENCH PACKAGE.

8' 0' 8' 16'

GRAPHIC SCALE

KEY PLAN

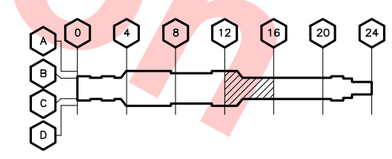

Not For Construction

REV	DATE	BY	SUB	APP	DESCRIPTION
0	20130531				READINESS FOR CONSTRUCTION REPLACED C700-S-DB-S104 REV P.

DESIGNED BY J. REBER, S.E.
DRAWN BY P. DIAZ
CHECKED BY M. TARAZI
IN CHARGE M. TARAZI
DATE 20130531

REGISTERED PROFESSIONAL ENGINEER NIMAN FUAD TARAZI # S 3185 EXP. 6/30/14 STRUCTURAL STATE OF CALIFORNIA

Skanska Shimmick Herzog
1436 California Circle
Milpitas, California 95035
A Joint Venture

MFT Consulting Engineers, Inc. 1773 San Pablo Ave., Suite A3 Pinole, CA 94564 (510) 222-4106 Fax (510) 222-6418
Anil Verma Associates, Inc.
Lockwood, Andrews & Newnam, Inc. A LEO A DALY COMPANY
T-Y-LIN INTERNATIONAL

SUBMITTED _____ APPROVED _____

VTA BART SILICON VALLEY
BART SILICON VALLEY BERRYESSA EXTENSION

LINE, TRACK, STATIONS AND SYSTEMS
DESIGN UNIT 023
MILPITAS STATION
PLATFORM LEVEL
FRAMING PLAN
SHEET 4 OF 7

CADD FILENAME C700-S-DB-S114.dwg
SIZE D | SCALE 1/8" = 1'-0"
CONTRACT NO. C700 | REV. 0
AREA CODE DB | SHEET NO. S114 | PAGE NO. 0149

cad-02 Jul 05, 2013 - 1:49pm P:\BART Berryessa Extension Line\S - STRUCTURAL MILPITAS\WORK_6-10-2012\C700-S-DB-S114.dwg

NOTES:

1. FOR PLATFORM LEVEL FRAMING NOTES, SEE DWG DB-S111.

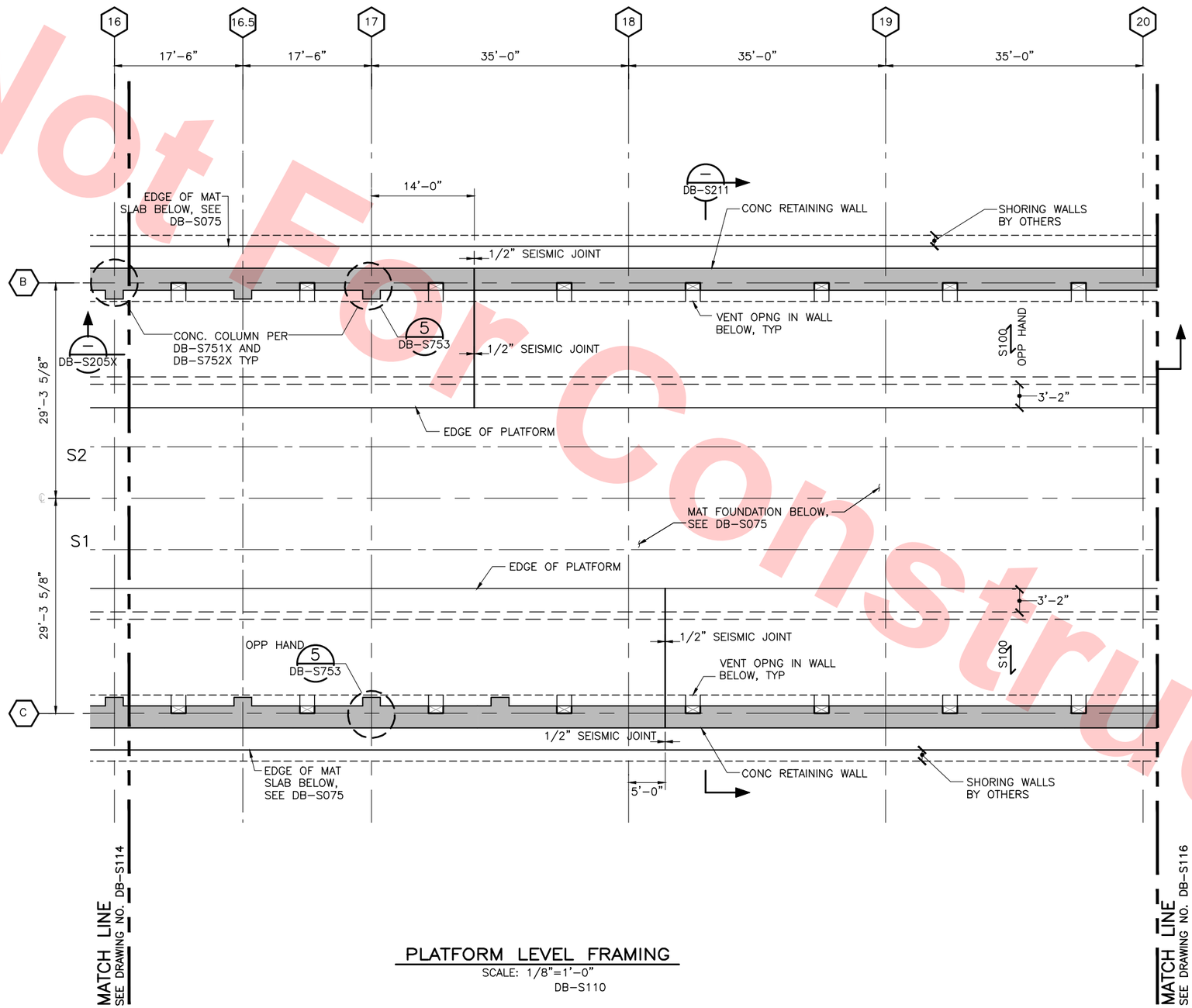

PLATFORM LEVEL FRAMING

SCALE: 1/8"=1'-0"

DB-S110

FOR REFERENCE ONLY AND NOT FOR REVIEW.
THIS DRAWING WAS ALREADY SUBMITTED UNDER
DU23-WP08 RFC TRENCH PACKAGE.

8' 0' 8' 16'

GRAPHIC SCALE

KEY PLAN

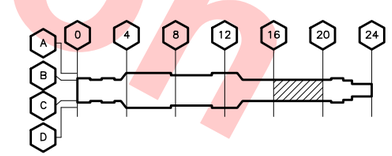

Not For Construction

REV	DATE	BY	SUB	APP	DESCRIPTION
0	20130531				READINESS FOR CONSTRUCTION
					REPLACED C700-S-DB-S105 REV P.

DESIGNED BY J. REBER, S.E.
DRAWN BY P. DIAZ
CHECKED BY M. TARAZI
IN CHARGE M. TARAZI
DATE 20130531

REGISTERED PROFESSIONAL ENGINEER NAWAH FUAD TARAZI # S 3185 EXP. 6/30/14 STRUCTURAL STATE OF CALIFORNIA

Skanska Shimmick Herzog
1436 California Circle
Milpitas, California 95035
A Joint Venture

MFT Consulting Engineers, Inc. Anil Verma Associates, Inc.
1773 San Pablo Ave., Suite A3 (510) 222-4106
Pinole, CA 94564 Fax (510) 222-6418

Lockwood, Andrews & Newnam, Inc. A LEO A DALY COMPANY
T-Y-LIN INTERNATIONAL

SUBMITTED _____
APPROVED _____

VTA BART SILICON VALLEY
BART SILICON VALLEY BERRYESSA EXTENSION

LINE, TRACK, STATIONS AND SYSTEMS
DESIGN UNIT 023
MILPITAS STATION
PLATFORM LEVEL
FRAMING PLAN
SHEET 5 OF 7

CADD FILENAME C700-S-DB-S115.dwg
SIZE D | SCALE 1/8" = 1'-0"
CONTRACT NO. C700 | REV. 0
AREA CODE DB | SHEET NO. S115 | PAGE NO. 0150

cad-02 Jul 05, 2013 - 1:49pm P:\BART Berryessa Extension Line\S - STRUCTURAL MILPITAS\WORK_6-10-2012\C700-S-DB-S115.dwg

NOTES:

1. FOR PLATFORM LEVEL FRAMING NOTES, SEE DWG DB–S111.
2. 12" NORMAL WEIGHT CONC SLAB W/#6@12"OC TOP & BOT, EA WAY.
3. CONSTRUCTION JOINT PER DRAWING 6 / DB–S771

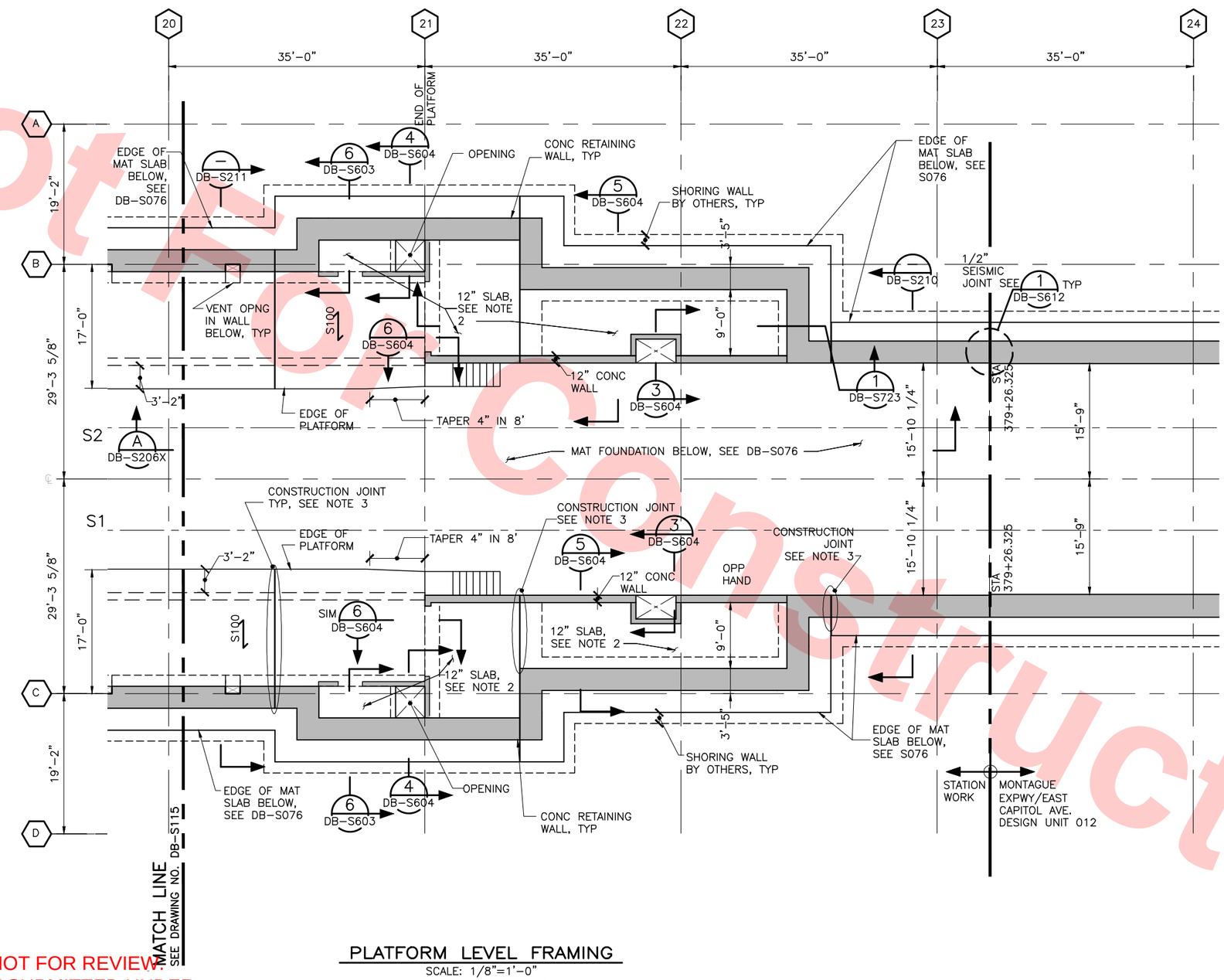

PLATFORM LEVEL FRAMING

SCALE: 1/8"=1'–0"

DB–S110

8' 0' 8' 16'

GRAPHIC SCALE

KEY PLAN

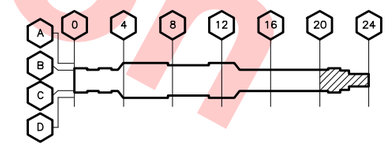

FOR REFERENCE ONLY AND NOT FOR REVIEW.
THIS DRAWING WAS ALREADY SUBMITTED UNDER DU23-WP08 RFC TRENCH PACKAGE.

Not For Construction

REV	DATE	BY	SUB	APP	DESCRIPTION
0	20130531				READINESS FOR CONSTRUCTION
					REPLACED C700–S–DB–S106 REV P.

DESIGNED BY J. REBER, S.E.
DRAWN BY P. DIAZ
CHECKED BY M. TARAZI
IN CHARGE M. TARAZI
DATE 20130531

REGISTERED PROFESSIONAL ENGINEER NIMAH FUAD TARAZI # S 3185 EXP.6/30/14 STRUCTURAL STATE OF CALIFORNIA

Skanska Shimmick Herzog
1436 California Circle
Milpitas, California 95035
A Joint Venture

MFT CONSULTING ENGINEERS, INC. Anil Verma Associates, Inc.
1773 San Pablo Ave., Suite A3 (510) 222-4106
Pinole, CA 94564 Fax (510) 222-6418

Lockwood, Andrews & Newnam, Inc. A LAN & HALY COMPANY
T·Y·LIN INTERNATIONAL

SUBMITTED
APPROVED

VTA BART SILICON VALLEY
BART SILICON VALLEY BERRYESSA EXTENSION

LINE, TRACK, STATIONS AND SYSTEMS
DESIGN UNIT 023
MILPITAS STATION
PLATFORM LEVEL
FRAMING PLAN
SHEET 6 OF 7

CADD FILENAME C700–S–DB–S116.dwg
SIZE D | SCALE 1/8" = 1'–0"
CONTRACT NO. C700 | REV. 0
AREA CODE DB | SHEET NO. S116 | PAGE NO. 0151

cad–02 Jul 05, 2013 – 1:49pm P:\BART Berryessa Extension Line\S – STRUCTURAL MILPITAS\WORK_6–10–2012\C700–S–DB–S116.dwg

NOTES:

1. FOR MAT FOUNDATION NOTES, SEE DWG NO DB–S111

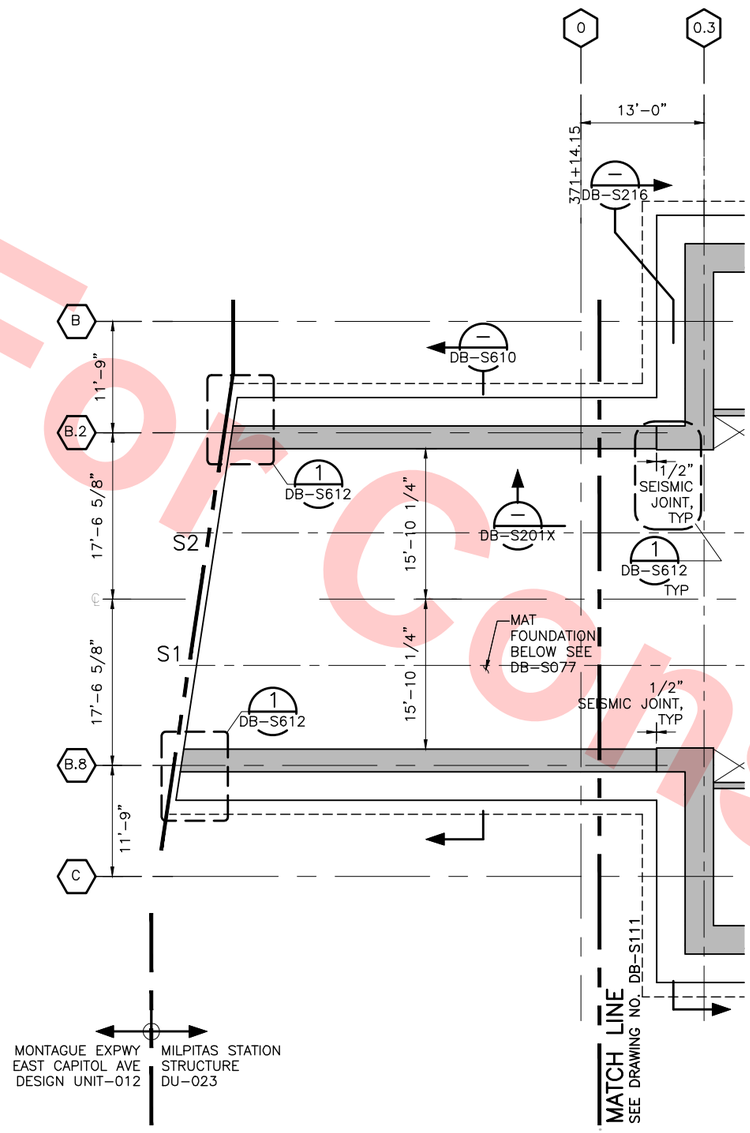

PLATFORM LEVEL FRAMING

SCALE: 1/8"=1'–0"

DB–S110

8' 0' 8' 16'

GRAPHIC SCALE

KEY PLAN

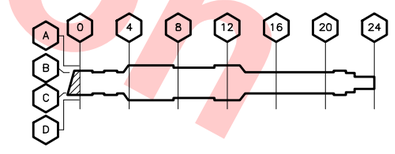

FOR REFERENCE ONLY AND NOT FOR REVIEW.
THIS DRAWING WAS ALREADY SUBMITTED UNDER
DU23-WP08 RFC TRENCH PACKAGE.

Not For Construction

REV	DATE	BY	SUB	APP	DESCRIPTION
0	20130531				READINESS FOR CONSTRUCTION

DESIGNED BY J. REBER, S.E.
DRAWN BY P. DIAZ
CHECKED BY M. TARAZI
IN CHARGE M. TARAZI
DATE 20130531

REGISTERED PROFESSIONAL ENGINEER NIMAN FUAD TARAZI # S 3185 EXP. 6/30/14 STRUCTURAL STATE OF CALIFORNIA

Skanska Shimmick Herzog
1436 California Circle
Milpitas, California 95035
A Joint Venture

MFT Consulting Engineers, Inc. Anil Verma Associates, Inc.
1773 San Pablo Ave., Suite A3 (510) 222-4106
Pinole, CA 94564 Fax (510) 222-6418

Lockwood, Andrews & Newnam, Inc. A LEO A DALY COMPANY | T-Y-LIN INTERNATIONAL

SUBMITTED _____ APPROVED _____

VTA BART SILICON VALLEY

BART SILICON VALLEY BERRYESSA EXTENSION

LINE, TRACK, STATIONS AND SYSTEMS
DESIGN UNIT 023
MILPITAS STATION
PLATFORM LEVEL
FRAMING PLAN
SHEET 7 OF 7

CADD FILENAME C700–S–DB–S117.dwg
SIZE D | SCALE 1/8" = 1'–0"
CONTRACT NO. C700 | REV. 0
AREA CODE DB | SHEET NO. S117 | PAGE NO. 0152

cad–02 Jul 05, 2013 – 1:49pm P:\BART Berryessa Extension Line\S – STRUCTURAL MILPITAS\WORK_6–10–2012\C700–S–DB–S117.dwg

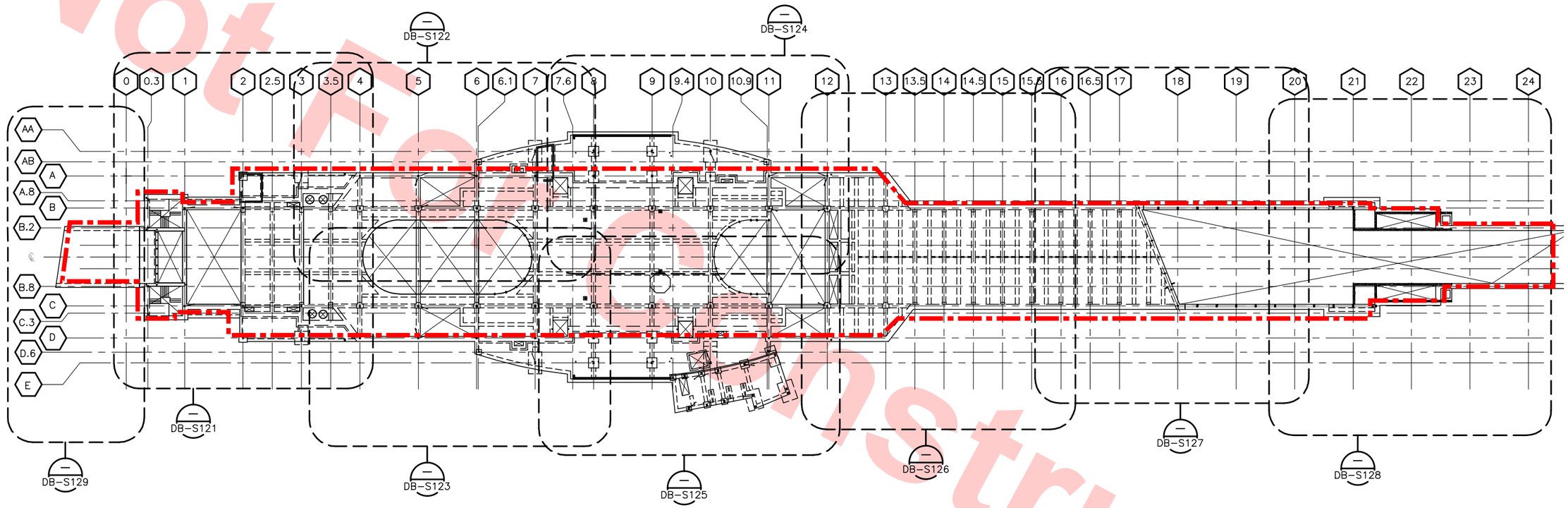

KEY PLAN FOUNDATION AND CONCOURSE FRAMING

SCALE: 1/32" = 1'-0"

Not For Construction

Santa Clara Valley Transportation Authority

____NO EXCEPTIONS TAKEN (NET)
____MAKE CORRECTIONS NOTED (MCN)
____AMEND AND RESUBMIT (A/R)

Any action shown above is subject to the terms of the contract and does not relieve the Contractor of any of its obligations under the contract, including design and detailing.

Contract No.: DB11002F

By: _____ Date: _____

32' 0' 32' 64'
GRAPHIC SCALE

NOTE TO REVIEWER(S):
DO NOT REVIEW AREAS DESIGNATED AS

REV	DATE	BY	SUB	APP	DESCRIPTION
0	20130710				READINESS FOR CONSTRUCTION
0	20130531				READINESS FOR CONSTRUCTION

DESIGNED BY J. REBER, S.E.
DRAWN BY P. DIAZ
CHECKED BY M. TARAZI
IN CHARGE M. TARAZI
DATE 20130531

REGISTERED PROFESSIONAL ENGINEER SUMAN FUAD # S-3185 EXP. 6/30/14 STRUCTURAL STATE OF CALIFORNIA

Skanska Shimmick Herzog
1436 California Circle
Milpitas, California 95035
A Joint Venture

MFT Consulting Engineers, Inc. Anil Verma Associates, Inc.
1773 San Pablo Ave., Suite A3 (510) 222-4106
Pinole, CA 94564 Fax (510) 222-5415
SUBMITTED

Lockwood, Andrews & Newnam, Inc. A LEO A DALY COMPANY
T-Y-LIN INTERNATIONAL
APPROVED

BART SILICON VALLEY
BART SILICON VALLEY BERRYESSA EXTENSION

LINE, TRACK, STATIONS AND SYSTEMS
DESIGN UNIT 023
MILPITAS STATION
FOUNDATION AND CONCOURSE FRAMING
KEY PLAN

CADD FILENAME C700-S-DB-S120.dwg
SIZE D | SCALE 1/32" = 1'-0"
CONTRACT NO. C700 | REV. 0
AREA CODE DB | SHEET NO. S120 | PAGE NO. 0153

cad-02 Jul 05, 2013 - 1:49pm P:\BART Berryessa Extension Line\S - STRUCTURAL MILPITAS\WORK_6-10-2012\C700-S-DB-S120.dwg

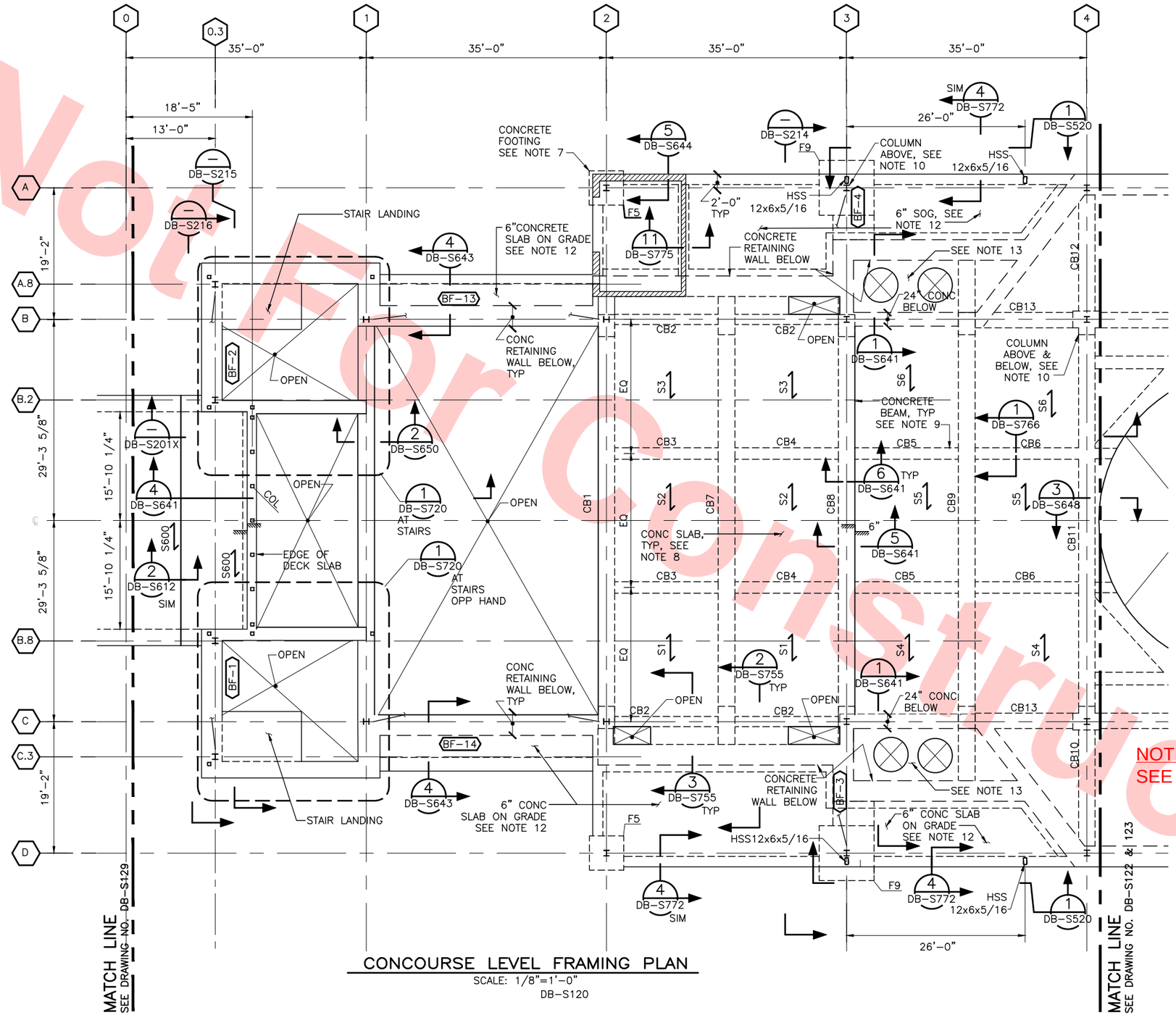

CONCOURSE LEVEL FRAMING PLAN

SCALE: 1/8"=1'-0"
DB-S120

NOTES:

1. TOP OF CONCOURSE LEVEL FINISH FLOOR ELEVATION, 53'-6" = 0'-0" TYP, UNO.
2. VERIFY ALL OPENINGS AND DIMENSIONS WITH ARCHITECTURAL DRAWINGS.
3. REFER TO GENERAL NOTES, LEGEND, AND ABBREVIATIONS ON DRAWINGS DB-S001X, DB-S002X, AND DB-S003X.
4. CONTROL JOINTS FOR SLABS ON GRADE ARE TO BE INSTALLED @ 20' OC MAX IN 8" SLAB, 12' OC MAX IN 5" SLAB OR AS SHOWN ON PLAN. CONTROL JOINTS SHALL BE MADE BY SAWCUTTING SLAB AS SOON AS THE SURFACE IS FIRM ENOUGH SO THAT IT WILL NOT BE DAMAGED BY THE BLADE, USUALLY WITHIN 4 TO 12 HOURS AFTER THE CONCRETE HARDENS (NO LATER THAN 24 HOURS AFTER PLACEMENT). SAWCUT DEPTH SHALL BE 1 1/2". CONSTRUCTION JOINTS MAY BE INSTALLED AT THE CONTRACTOR'S OPTION.
5. CONTRACTOR IS RESPONSIBLE FOR THE PLACEMENT OF ALL EMBEDDED ITEMS.
6. ALL DIMENSIONS ARE TO CENTERLINE OF COLUMNS OR FACE OF CONCRETE, TYP UNLESS NOTED OTHERWISE.
7. FOR FOOTINGS, DENOTED FX SEE SCHEDULE AND DETAILS ON DRAWING 1/DB-S750.
8. FOR SUPPORTED SLABS, DENOTED Sx SEE SCHEDULE & DETAILS ON DRAWINGS DB-S761 & DB-S762.
9. FOR CONCRETE BEAM/GIRDER, DENOTED CBxx SEE SCHEDULE ON DRAWING DB-S765 & S766
10. FOR ALL STEEL COLUMN AND BASE PLATE SIZES SEE DRAWING DB-S751X & DB-S752X.
11. BF-1 INDICATES BRACED FRAME ABOVE. SEE STEEL FRAMING ELEVATIONS DB-S501, DB-S502 & DB-S503 SHEETS.
12. SLAB-ON-GRADE TO BE REINFORCED W/#4@16" OC EACH WAY, SEE DETAIL 1/DB-S771
13. SLAB THICKNESS 14" REINFORCEMENT WITH #6@6" EA WAY, TOP & BOT.

NOTE TO REVIEWER(S):
SEE SHEET DB-S120 FOR AREAS NOT TO REVIEW

8' 0' 8' 16'
GRAPHIC SCALE

KEY PLAN

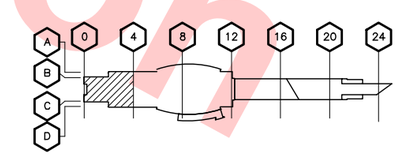

Not For Construction

REV	DATE	BY	SUB	APP	DESCRIPTION
0	20130531				READINESS FOR CONSTRUCTION
					REPLACED C700-S-DB-S201 REV P.

DESIGNED BY J. REBER, S.E.
DRAWN BY P. DIAZ
CHECKED BY M. TARAZI
IN CHARGE M. TARAZI
DATE 20130531

REGISTERED PROFESSIONAL ENGINEER HUMAN FUAD TARAZI # S 3185 EXP. 6/30/14 STRUCTURAL STATE OF CALIFORNIA

Skanska Shimmick Herzog
1436 California Circle
Milpitas, California 95035
A Joint Venture

MFT CONSULTING ENGINEERS, INC. Anil Verma Associates, Inc.
1773 San Pablo Ave., Suite A3 (510) 222-4106
Pinole, CA 94564 Fax (510) 222-6418

Lockwood, Andrews & Newnam, Inc. A LAN & BALY COMPANY
T-Y-LIN INTERNATIONAL

SUBMITTED
APPROVED

VTA BART SILICON VALLEY
BART SILICON VALLEY BERRYESSA EXTENSION

LINE, TRACK, STATIONS AND SYSTEMS
DESIGN UNIT 023
MILPITAS STATION
FOUNDATION AND CONCOURSE
FRAMING PLAN
SHEET 1 OF 9

CADD FILENAME C700-S-DB-S121.dwg
SIZE D | SCALE 1/8" = 1'-0"
CONTRACT NO. C700 | REV. 0
AREA CODE DB | SHEET NO. S121 | PAGE NO. 0154

cad-02 Jul 05, 2013 - 3:36pm P:\BART Berryessa Extension Line\S - STRUCTURAL MILPITAS\WORK_6-10-2012\C700-S-DB-S121.dwg

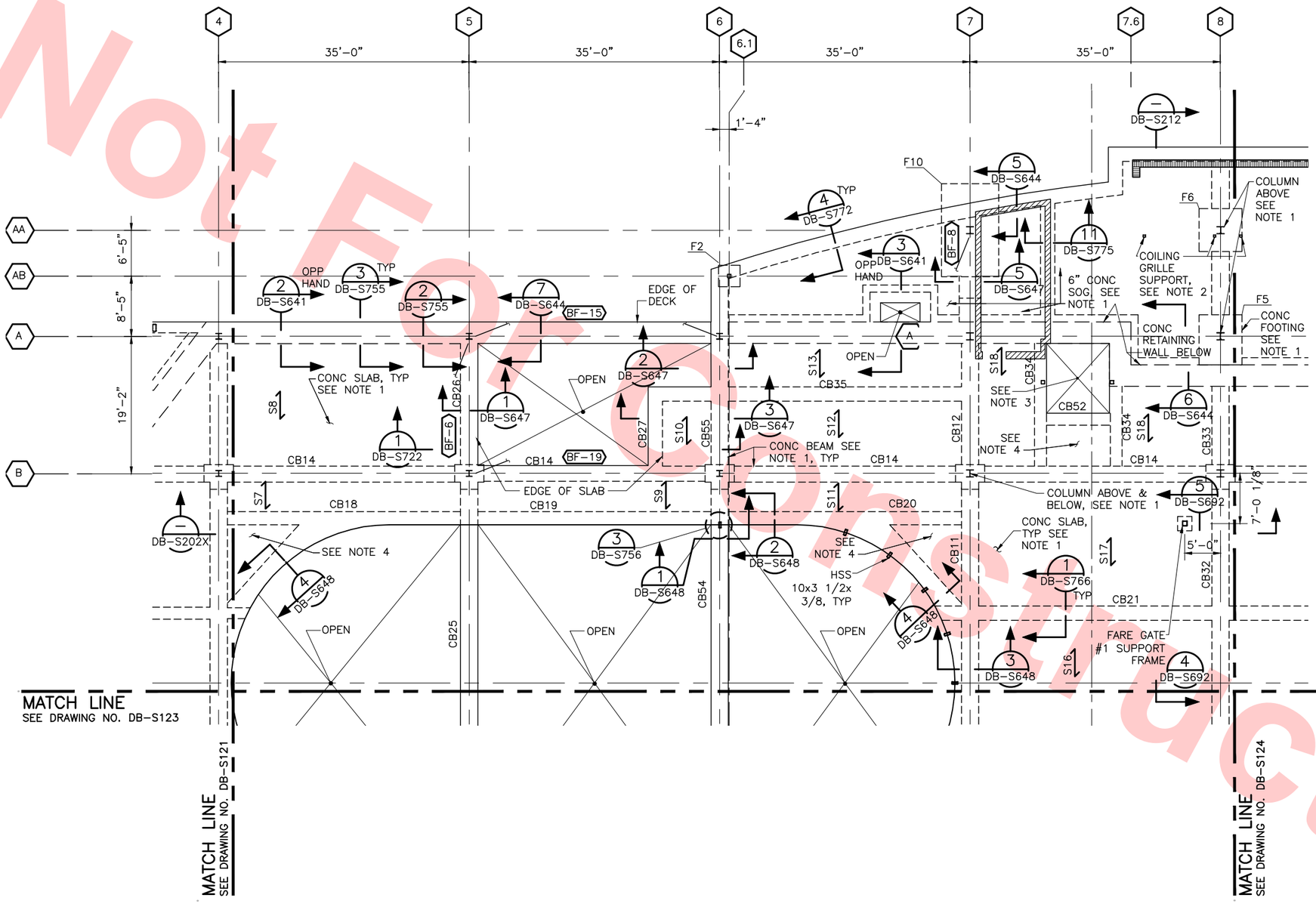

NOTES:

1. FOR FOUNDATION AND CONCOURSE LEVEL FRAMING NOTES, SEE DWG DB-S121.
2. FOR LOCATION AND DETAILS OF COILING GRILLE SUPPORT COLUMN SEE DRAWING DB-S691.
3. FOR ELEVATOR FRAMING PLANS SEE 1/DB-S135 (015)
4. SLAB THICKNESS IS 10" REINFORCEMENT W/#5@6" EW TOP & BOT.

Santa Clara Valley Transportation Authority

____NO EXCEPTIONS TAKEN (NET)
____MAKE CORRECTIONS NOTED (MCN)
____AMEND AND RESUBMIT (A/R)

Any action shown above is subject to the terms of the contract and does not relieve the Contractor of any of its obligations under the contract, including design and detailing.

Contract No.: DB11002F

By: _____ Date: _____

8' 0' 8' 16'
GRAPHIC SCALE

KEY PLAN

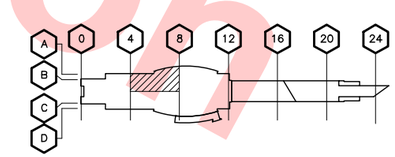

NOTE TO REVIEWER(S):
SEE SHEET DB-S120 FOR AREAS NOT TO REVIEW

CONCOURSE LEVEL FRAMING PLAN
SCALE: 1/8"=1'-0"
DB-S120

Not For Construction

REV	DATE	BY	SUB	APP	DESCRIPTION
0	20130531				READINESS FOR CONSTRUCTION
					REPLACED C700-S-DB-S202 REV P.

DESIGNED BY J. REBER, S.E.
DRAWN BY P. DIAZ
CHECKED BY M. TARAZI
IN CHARGE M. TARAZI
DATE 20130531

REGISTERED PROFESSIONAL ENGINEER NIMAN FUAD TARAZI # S 3185 EXP. 6/30/14 STRUCTURAL STATE OF CALIFORNIA

Skanska Shimmick Herzog
1436 California Circle
Milpitas, California 95035
A Joint Venture

MFT Consulting Engineers, Inc. 1773 San Pablo Ave., Suite A3 Pinole, CA 94564 (510) 222-4106 Fax (510) 222-6418
Anil Verma Associates, Inc.
Lockwood, Andrews & Newnam, Inc. A LEO A DALY COMPANY
T-Y-LIN INTERNATIONAL

SUBMITTED _____
APPROVED _____

VTA BART SILICON VALLEY
BART SILICON VALLEY BERRYESSA EXTENSION

LINE, TRACK, STATIONS AND SYSTEMS
DESIGN UNIT 023
MILPITAS STATION
FOUNDATION AND CONCOURSE
FRAMING PLAN
SHEET 2 OF 9

CADD FILENAME C700-S-DB-S122.dwg
SIZE D | SCALE 1/8" = 1'-0"
CONTRACT NO. C700 | REV. 0
AREA CODE DB | SHEET NO. S122 | PAGE NO. 0155

cad-02 Jul 08, 2013 - 10:16am P:\BART Berryessa Extension Line\S - STRUCTURAL MILPITAS\WORK_6-10-2012\C700-S-DB-S122.dwg

NOTES:

1. FOR FOUNDATION AND CONCOURSE LEVEL FRAMING NOTES, SEE DWG DB–S121.
2. FOR LOCATION AND DETAILS OF COILING GRILLE SUPPORT COLUMNS SEE DRAWING DB–S691. 015
3. FOR ELEVATOR FRAMING PLANS SEE 1/DB–S135
4. SLAB THICKNESS IS 10" REINFORCEMENT W/#5@6 EW TOP & BOT.

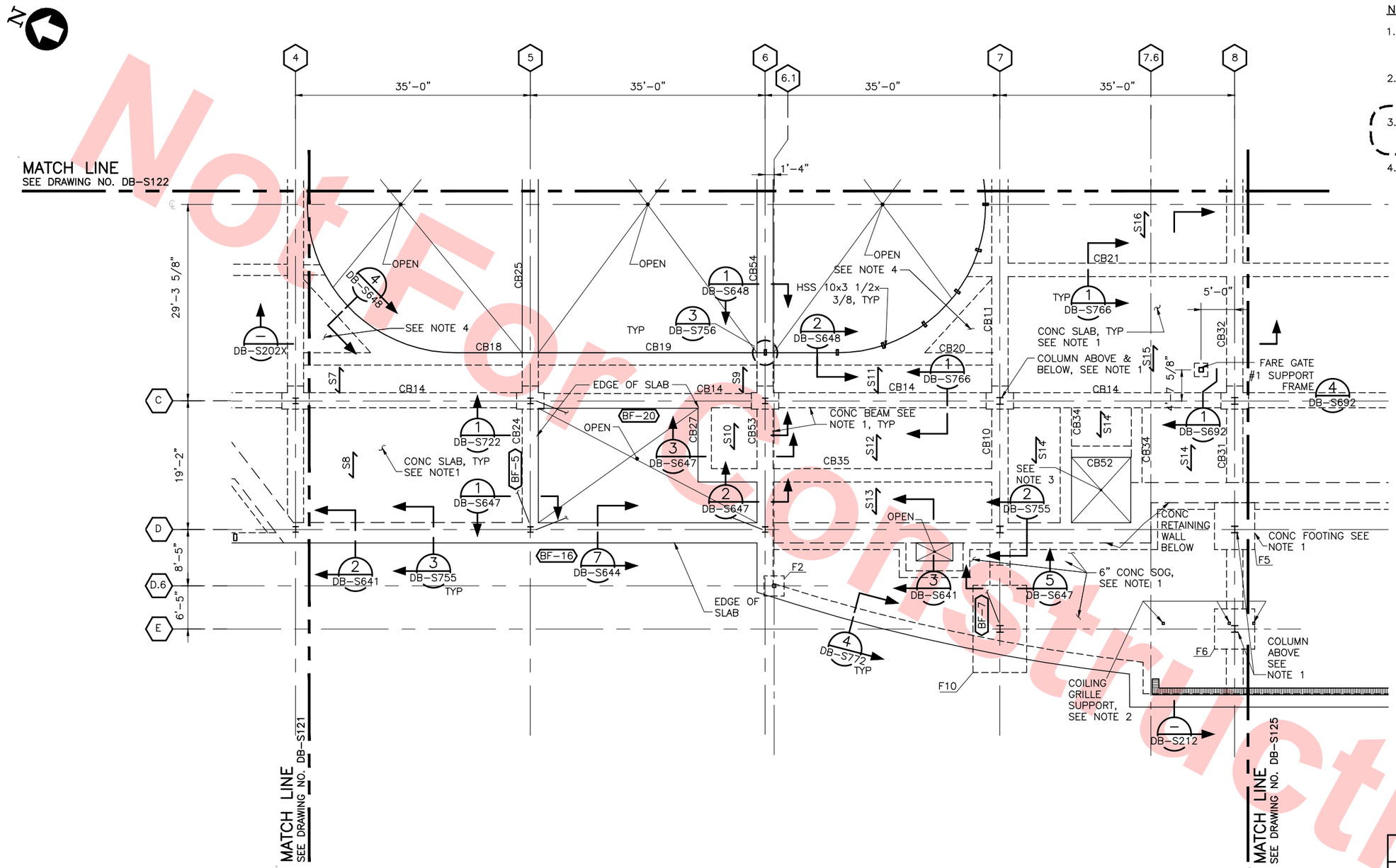

Santa Clara Valley Transportation Authority

____NO EXCEPTIONS TAKEN (NET)
____MAKE CORRECTIONS NOTED (MCN)
____AMEND AND RESUBMIT (A/R)

Any action shown above is subject to the terms of the contract and does not relieve the Contractor of any of its obligations under the contract, including design and detailing.

Contract No.: DB11002F

By: _____ Date: _____

8' 0' 8' 16'
GRAPHIC SCALE

KEY PLAN

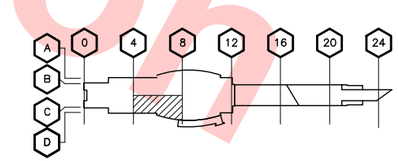

NOTE TO REVIEWER(S):
SEE SHEET DB-S120 FOR AREAS NOT TO REVIEW

CONCOURSE LEVEL FRAMING PLAN
SCALE: 1/8"=1'–0"
DB–S120

REV	DATE	BY	SUB	APP	DESCRIPTION
0	20130531				READINESS FOR CONSTRUCTION
					REPLACED C700–S–DB–S203 REV P.

DESIGNED BY J. REBER, S.E.
DRAWN BY P. DIAZ
CHECKED BY M. TARAZI
IN CHARGE M. TARAZI
DATE 20130531

REGISTERED PROFESSIONAL ENGINEER NOMAN FUAD TARAZI # S 3185 EXP.6/30/14 STRUCTURAL STATE OF CALIFORNIA

Skanska Shimmick Herzog
1436 California Circle
Milpitas, California 95035
A Joint Venture

MFT CONSULTING ENGINEERS, INC. Anil Verma Associates, Inc.
1773 San Pablo Ave., Suite A3 (510) 222-4106
Pinole, CA 94564 Fax (510) 222-6418

Lockwood, Andrews & Newnam, Inc. A LAN A KALY COMPANY | T·Y·LIN INTERNATIONAL

SUBMITTED _____
APPROVED _____

VTA BART SILICON VALLEY
BART SILICON VALLEY BERRYESSA EXTENSION

LINE, TRACK, STATIONS AND SYSTEMS
DESIGN UNIT 023
MILPITAS STATION
FOUNDATION AND CONCOURSE
FRAMING PLAN
SHEET 3 OF 9

CADD FILENAME C700–S–DB–S123.dwg
SIZE D | SCALE 1/8" = 1'–0"
CONTRACT NO. C700 | REV. 0
AREA CODE DB | SHEET NO. S123 | PAGE NO. 0156

cad–02 Jul 08, 2013 – 10:16am P:\BART Berryessa Extension Line\S – STRUCTURAL MILPITAS\WORK_6–10–2012\C700–S–DB–S123.dwg

Not For Construction

NOTES:

1. FOR FOUNDATION AND CONCOURSE LEVEL FRAMING NOTES, SEE DWG DB–S121.
2. FOR DETAILS OF COILING GRILLE SUPPORT COLUMNS SEE DRAWING DB–S692.
3. KNOCK–OUT SLAB FOR FUTURE ELEVATOR OPENING.
4. SQUARE HSS ARE SLANTED. LOCATE PER ARCHITECTURAL DRAWING AND MANUFACTURER REQUIREMENTS.
5. SLAB THICKNESS IS 10" REINFORCEMENT W/#5@6" EW TOP & BOT.

015

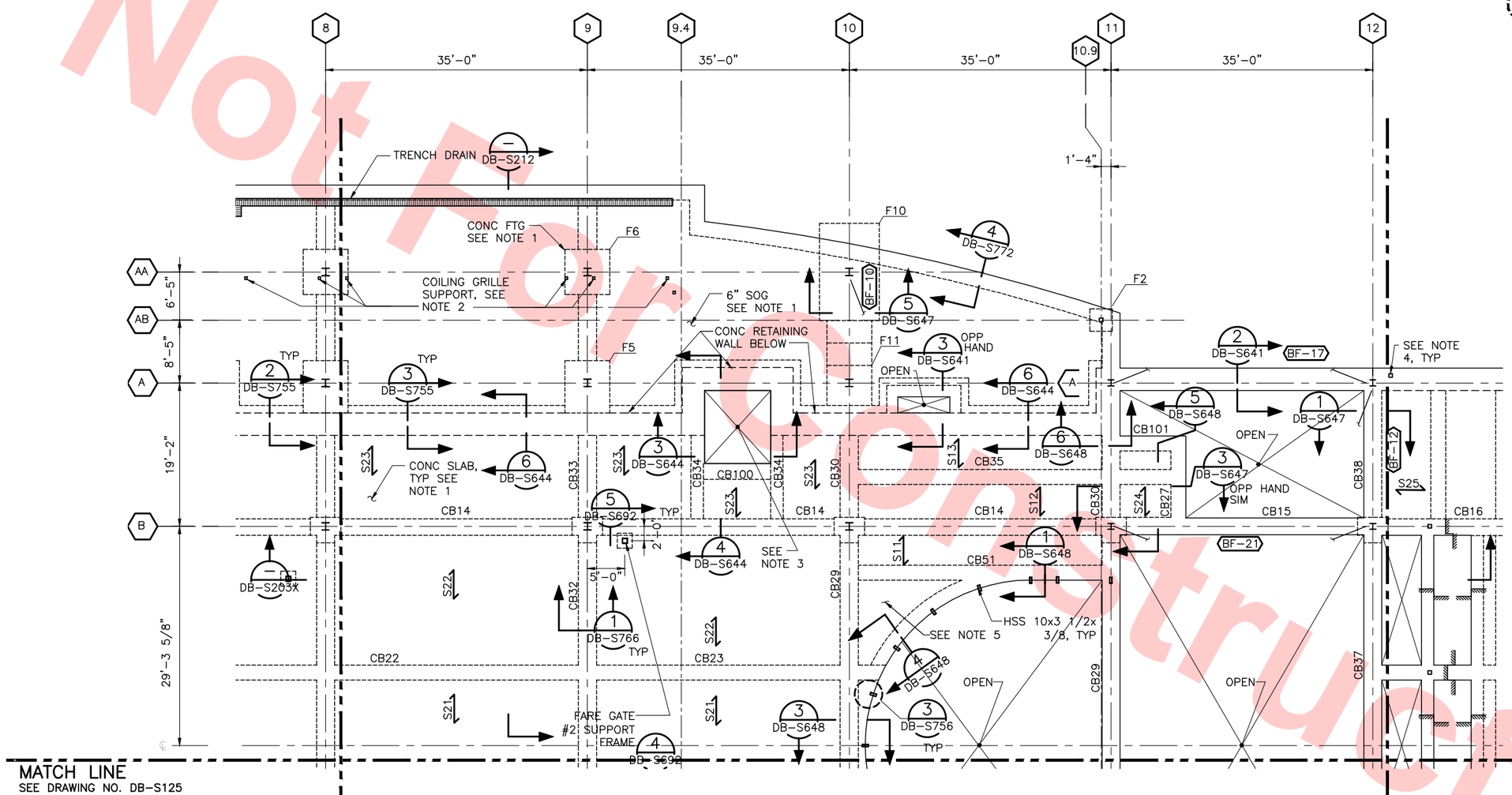

MATCH LINE
SEE DRAWING NO. DB–S125

MATCH LINE
SEE DRAWING NO. DB–S122

MATCH LINE
SEE DRAWING NO. DB–S126

NOTE TO REVIEWER(S):
SEE SHEET DB-S120 FOR AREAS NOT TO REVIEW

CONCOURSE LEVEL FRAMING PLAN

SCALE: 1/8"=1'–0"
DB–S120

8' 0' 8' 16'
GRAPHIC SCALE

KEY PLAN

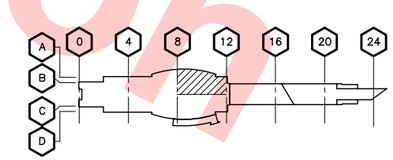

Santa Clara Valley Transportation Authority

____NO EXCEPTIONS TAKEN (NET)
____MAKE CORRECTIONS NOTED (MCN)
____AMEND AND RESUBMIT (A/R)

Any action shown above is subject to the terms of the contract and does not relieve the Contractor of any of its obligations under the contract, including design and detailing.

Contract No.: DB11002F

By: _____ Date: _____

Not For Construction

REV	DATE	BY	SUB	APP	DESCRIPTION
0	20130531				READINESS FOR CONSTRUCTION
					REPLACED C700–S–DB–S204 REV P.

DESIGNED BY J. REBER, S.E.
DRAWN BY P. DIAZ
CHECKED BY M. TARAZI
IN CHARGE M. TARAZI
DATE 20130531

REGISTERED PROFESSIONAL ENGINEER MINAH FUAD TARAZI # S 3185 EXP.6/30/14 STRUCTURAL STATE OF CALIFORNIA

Skanska Shimmick Herzog
1436 California Circle
Milpitas, California 95035
A Joint Venture

MFT Consulting Engineers, Inc. Anil Verma Associates, Inc.
1773 San Pablo Ave., Suite A3 (510) 222-4106
Pinole, CA 94564 Fax (510) 222-6418

Lockwood, Andrews & Newnam, Inc. A LAN & RALY COMPANY
T·Y·LIN INTERNATIONAL

SUBMITTED _____
APPROVED _____

VTA. BART SILICON VALLEY
BART SILICON VALLEY BERRYESSA EXTENSION

LINE, TRACK, STATIONS AND SYSTEMS
DESIGN UNIT 023
MILPITAS STATION
FOUNDATION AND CONCOURSE
FRAMING PLAN
SHEET 4 OF 9

CADD FILENAME C700–S–DB–S124.dwg
SIZE D | SCALE 1/8" = 1'–0"
CONTRACT NO. C700 | REV. 0
AREA CODE DB | SHEET NO. S124 | PAGE NO. 0157

cad–02 Jul 05, 2013 – 3:37pm P:\BART Berryessa Extension Line\S – STRUCTURAL MILPITAS\WORK_6–10–2012\C700–S–DB–S124.dwg

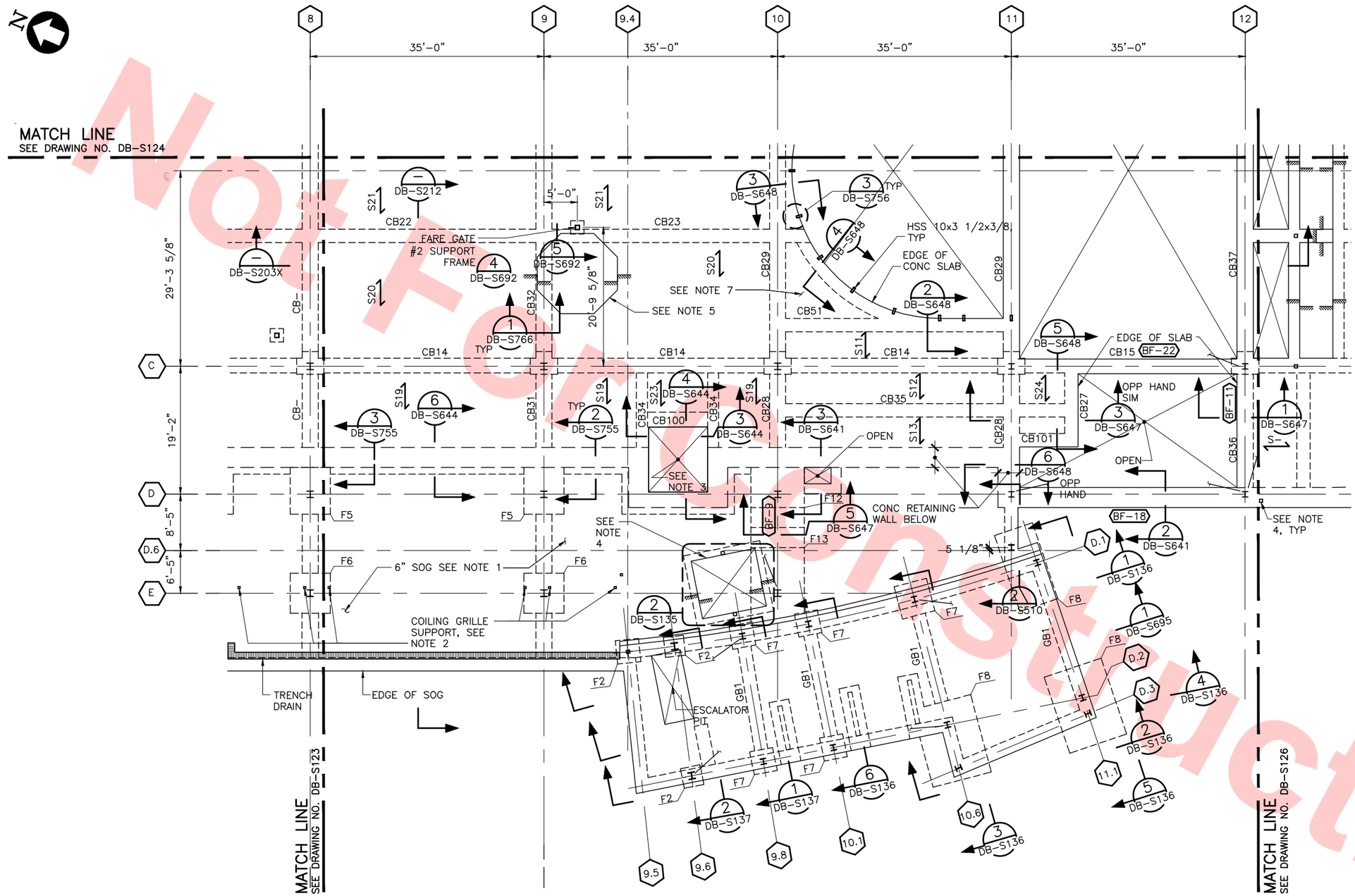

CONCOURSE LEVEL FRAMING PLAN

SCALE: 1/8"=1'-0"

DB-S120

NOTES:

1. FOR FOUNDATION AND CONCOURSE LEVEL FRAMING NOTES, SEE DWG DB-S121.
2. FOR DETAILS OF COILING GRILLE SUPPORT COLUMNS SEE DRAWING DB-S692.
3. KNOCK-OUT SLAB FOR FUTURE ELEVATOR OPENING. REINFORCING DETAILING SHALL ALLOW FOR FUTURE REMOVAL OF SLAB.
4. LOCATE HSS PER ARCHITECTURAL DRAWINGS AND MANUFACTURER REQUIREMENTS. 015
5. FOR STATION AGENT BOOTH, SEE DRAWING DB-S645 & DB-S646.
6. FOR GB1 (GRADE BEAM) SEE DWG NO DB-S750 FOR DETAIL.
7. SLAB THICKNESS IS 10" REINFORCEMENT W/#5@6" EW TOP & BOT.

Santa Clara Valley Transportation Authority

____NO EXCEPTIONS TAKEN (NET)
____MAKE CORRECTIONS NOTED (MCN)
____AMEND AND RESUBMIT (A/R)

Any action shown above is subject to the terms of the contract and does not relieve the Contractor of any of its obligations under the contract, including design and detailing.

Contract No.: DB11002F

By: _____ Date: _____

8' 0' 8' 16'

GRAPHIC SCALE

KEY PLAN

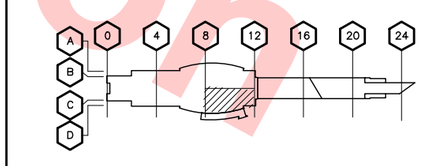

NOTE TO REVIEWER(S):
SEE SHEET DB-S120 FOR AREAS NOT TO REVIEW

Not for Construction

REV	DATE	BY	SUB	APP	DESCRIPTION
0	20130710				READINESS FOR CONSTRUCTION
0	20130531				READINESS FOR CONSTRUCTION
					REPLACED C700-S-DB-S205 REV P.

DESIGNED BY J. REBER, S.E.
DRAWN BY P. DIAZ
CHECKED BY M. TARAZI
IN CHARGE M. TARAZI
DATE 20130710

REGISTERED PROFESSIONAL ENGINEER SOHAIL FUAD TAZI S-3185 EXP. 6/30/14 STRUCTURAL STATE OF CALIFORNIA

Skanska Shimmick Herzog
1436 California Circle
Milpitas, California 95035
A Joint Venture

MFT Consulting Engineers, Inc. Anil Verma Associates, Inc.
1773 San Pablo Ave., Suite A3 (510) 222-4106
Pinole, CA 94564 Fax (510) 222-5415

SUBMITTED

Lockwood, Andrews & Newnam, Inc. A LEO A DALY COMPANY
T-Y-LIN INTERNATIONAL

APPROVED

VTA BART SILICON VALLEY

BART SILICON VALLEY BERRYESSA EXTENSION

LINE, TRACK, STATIONS AND SYSTEMS
DESIGN UNIT 023
MILPITAS STATION
FOUNDATION AND CONCOURSE
FRAMING PLAN
SHEET 5 OF 9

CADD FILENAME C700-S-DB-S125.dwg
SIZE D | SCALE 1/8" = 1'-0"
CONTRACT NO. C700 | REV. 0
AREA CODE DB | SHEET NO. S125 | PAGE NO. 0158

cad-02 Jul 08, 2013 - 10:16am P:\BART Berryessa Extension Line\S - STRUCTURAL MILPITAS\WORK_6-10-2012\C700-S-DB-S125.dwg

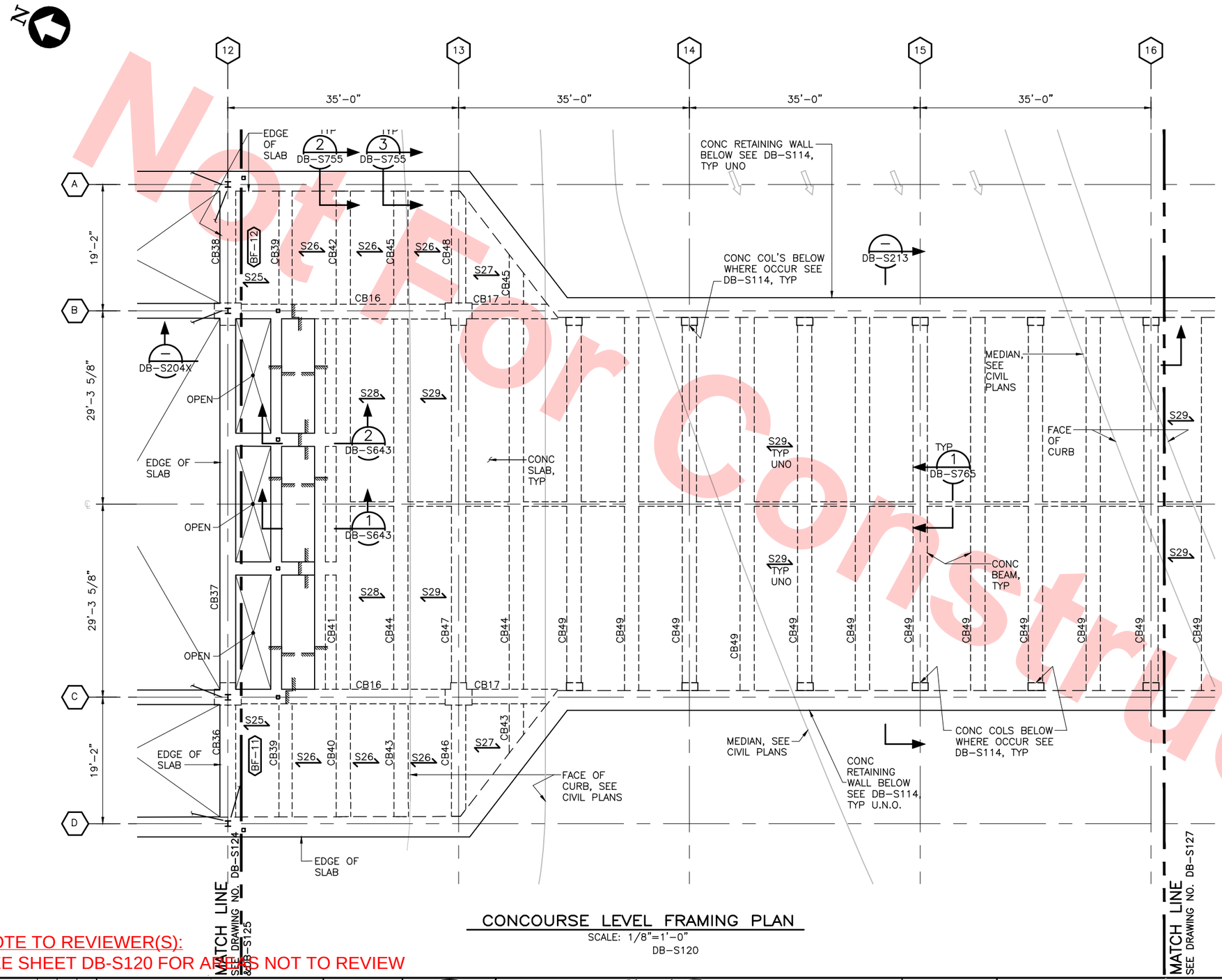

CONCOURSE LEVEL FRAMING PLAN

SCALE: 1/8"=1'-0"

DB-S120

NOTES:

1. FOR FOUNDATION AND CONCOURSE LEVEL FRAMING NOTES, DWG DB-S121.
2. COORDINATE LOCATION OF SIDEWALKS, LANDSCAPE ISLAND, CURB AND GUTTER WITH DRAWINGS: LM-C110, LM-C207 AND LM-C171 PROVIDE #4@36" EACH WAY DOWELS INTO ROADWAYS SLAB. SEE SIMILAR DETAIL 3 DB-S771

8' 0' 8' 16'

GRAPHIC SCALE

KEY PLAN

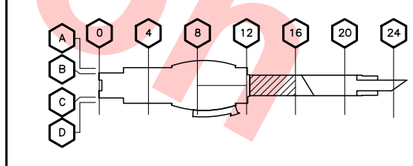

Not For Construction

NOTE TO REVIEWER(S):
SEE SHEET DB-S120 FOR ALL DWGS NOT TO REVIEW

REV	DATE	BY	SUB	APP	DESCRIPTION
0	20130531				READINESS FOR CONSTRUCTION REPLACED C700-S-DB-S206 REV P.

DESIGNED BY J. REBER, S.E.
DRAWN BY P. DIAZ
CHECKED BY M. TARAZI
IN CHARGE M. TARAZI
DATE 20130531

REGISTERED PROFESSIONAL ENGINEER NIMAN FUAD TARAZI # S 3185 EXP. 6/30/14 STRUCTURAL STATE OF CALIFORNIA

Skanska Shimmick Herzog
1436 California Circle
Milpitas, California 95035
A Joint Venture

MFT Consulting Engineers, Inc. Anil Verma Associates, Inc.
1773 San Pablo Ave., Suite A3 (510) 222-4106
Pinole, CA 94564 Fax (510) 222-6418

Lockwood, Andrews & Newnam, Inc. A LEO A DALY COMPANY
T-Y-LIN INTERNATIONAL

SUBMITTED _____
APPROVED _____

VTA BART SILICON VALLEY
BART SILICON VALLEY BERRYESSA EXTENSION

LINE, TRACK, STATIONS AND SYSTEMS
DESIGN UNIT 023
MILPITAS STATION
FOUNDATION AND CONCOURSE
FRAMING PLAN
SHEET 6 OF 9

CADD FILENAME C700-S-DB-S126.dwg
SIZE D | SCALE 1/8" = 1'-0"
CONTRACT NO. C700 | REV. 0
AREA CODE DB | SHEET NO. S126 | PAGE NO. 0159

cad-02 Jul 05, 2013 - 1:50pm P:\BART Berryessa Extension Line\S - STRUCTURAL MILPITAS\WORK_6-10-2012\C700-S-DB-S126.dwg

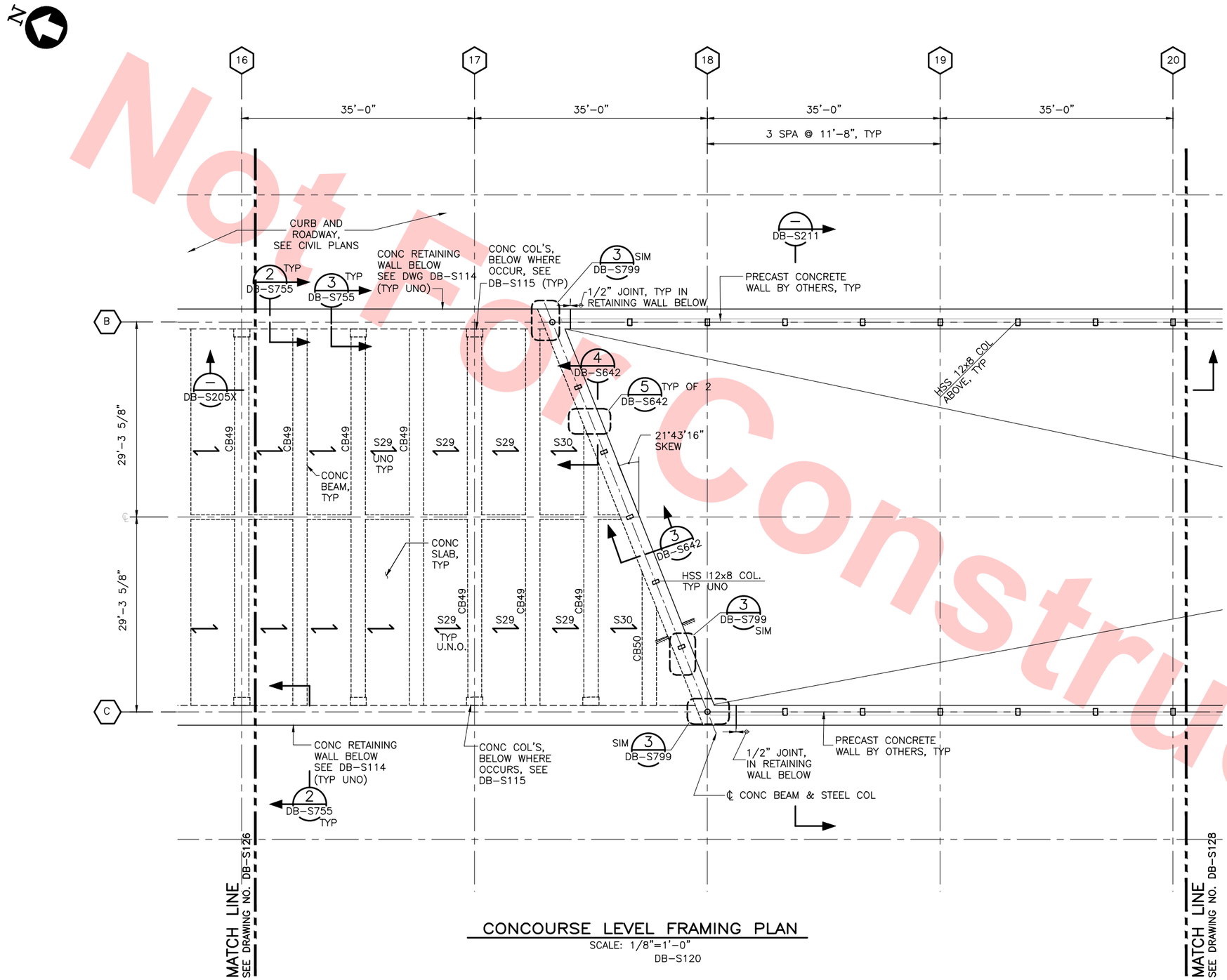

CONCOURSE LEVEL FRAMING PLAN

SCALE: 1/8"=1'-0"

DB-S120

NOTES:

1. FOR FOUNDATION AND CONCOURSE LEVEL FRAMING NOTES, SEE DWG NO DB-S121.
2. COORDINATE LOCATION OF SIDEWALKS, LANDSCAPE ISLAND, CURB AND GUTTER WITH DRAWINGS: LM-C110, LM-C207 AND LM-C171 PROVIDE #4@36" EACH WAY DOWELS INTO ROADWAYS SLAB. SEE SIMILAR DETAIL 3 DB-S771

NOTE TO REVIEWER(S):
SEE SHEET DB-S120 FOR AREAS NOT TO REVIEW

8' 0' 8' 16'
GRAPHIC SCALE

KEY PLAN

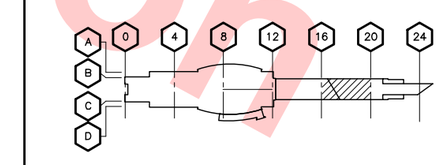

Not For Construction

REV	DATE	BY	SUB	APP	DESCRIPTION
0	20130531				READINESS FOR CONSTRUCTION
					REPLACED C700-S-DB-S207 REV P.

DESIGNED BY J. REBER, S.E.
DRAWN BY P. DIAZ
CHECKED BY M. TARAZI
IN CHARGE M. TARAZI
DATE 20130531

REGISTERED PROFESSIONAL ENGINEER HUMAN FUAD TARAZI # S 3185 EXP. 6/30/14 STRUCTURAL STATE OF CALIFORNIA

Skanska Shimmick Herzog
1436 California Circle
Milpitas, California 95035
A Joint Venture

MFT Consulting Engineers, Inc. Anil Verma Associates, Inc.
1773 San Pablo Ave., Suite A3 (510) 222-4106
Pinole, CA 94564 Fax (510) 222-6418

Lockwood, Andrews & Newnam, Inc. A LEO A DALY COMPANY
T-Y-LIN INTERNATIONAL

SUBMITTED
APPROVED

VTA BART SILICON VALLEY
BART SILICON VALLEY BERRYESSA EXTENSION

LINE, TRACK, STATIONS AND SYSTEMS
DESIGN UNIT 023
MILPITAS STATION
FOUNDATION AND CONCOURSE
FRAMING PLAN
SHEET 7 OF 9

CADD FILENAME C700-S-DB-S127.dwg
SIZE D | SCALE 1/8" = 1'-0"
CONTRACT NO. C700 | REV. 0
AREA CODE DB | SHEET NO. S127 | PAGE NO. 0160

cad-02 Jul 05, 2013 - 1:50pm P:\BART Berryessa Extension Line\S - STRUCTURAL MILPITAS\WORK_6-10-2012\C700-S-DB-S127.dwg

NOTES:

1. FOR FOUNDATION AND CONCOURSE LEVEL FRAMING NOTES, SEE DWG NO DB–S121.
2. METAL DECK SHALL BE TYPE D2 AS SHOWN ON A/S781.

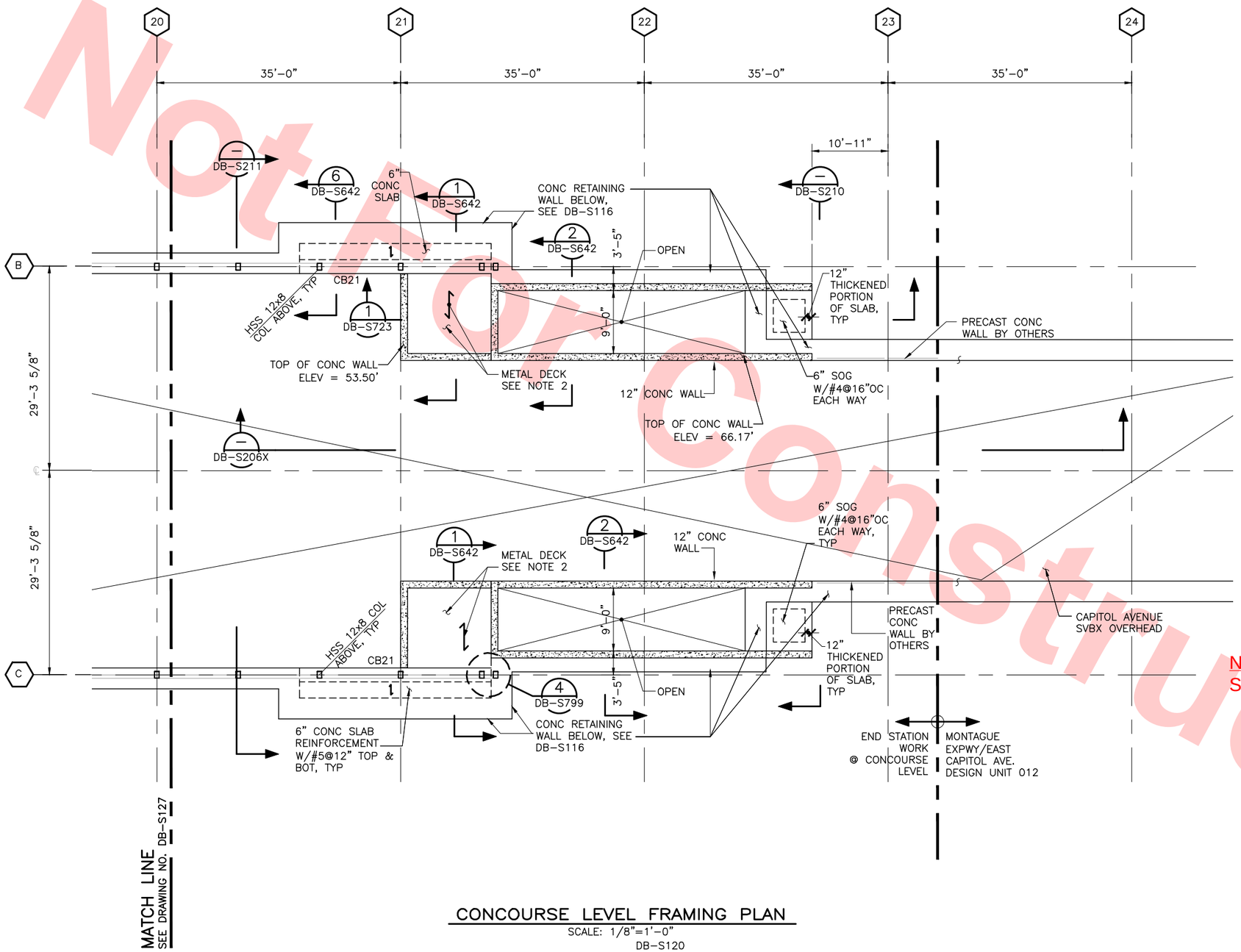

CONCOURSE LEVEL FRAMING PLAN

SCALE: 1/8"=1'–0"
DB–S120

NOTE TO REVIEWER(S):
SEE SHEET DB-S120 FOR AREAS NOT TO REVIEW

8' 0' 8' 16'
GRAPHIC SCALE

KEY PLAN

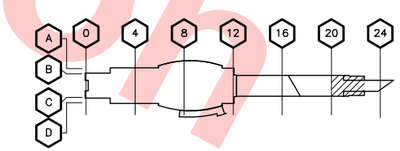

Not For Construction

REV	DATE	BY	SUB	APP	DESCRIPTION
0	20130531				READINESS FOR CONSTRUCTION REPLACED C700–S–DB–S208 REV P.

DESIGNED BY J. REBER, S.E.
DRAWN BY P. DIAZ
CHECKED BY M. TARAZI
IN CHARGE M. TARAZI
DATE 20130531

REGISTERED PROFESSIONAL ENGINEER HUMAN FUAD TARAZI # S 3185 EXP. 6/30/14 STRUCTURAL STATE OF CALIFORNIA

Skanska Shimmick Herzog
1436 California Circle
Milpitas, California 95035
A Joint Venture

MFT CONSULTING ENGINEERS, INC. Anil Verma Associates, Inc.
1773 San Pablo Ave., Suite A3 (510) 222-4106
Pinole, CA 94564 Fax (510) 222-6418

Lockwood, Andrews & Newnam, Inc. A LAN & BALY COMPANY
T-Y-LIN INTERNATIONAL

SUBMITTED
APPROVED

BART SILICON VALLEY
BART SILICON VALLEY BERRYESSA EXTENSION

LINE, TRACK, STATIONS AND SYSTEMS
DESIGN UNIT 023
MILPITAS STATION
FOUNDATION AND CONCOURSE
FRAMING PLAN
SHEET 8 OF 9

CADD FILENAME C700–S–DB–S128.dwg
SIZE D | SCALE 1/8" = 1'–0"
CONTRACT NO. C700 | REV. 0
AREA CODE DB | SHEET NO. S128 | PAGE NO. 0161

cad–02 Jul 05, 2013 – 1:50pm P:\BART Berryessa Extension Line\S – STRUCTURAL MILPITAS\WORK_6–10–2012\C700–S–DB–S128.dwg

NOTES:

1. FOR FOUNDATION AND CONCOURSE LEVEL FRAMING NOTES, SEE DWG NO DB–S121.

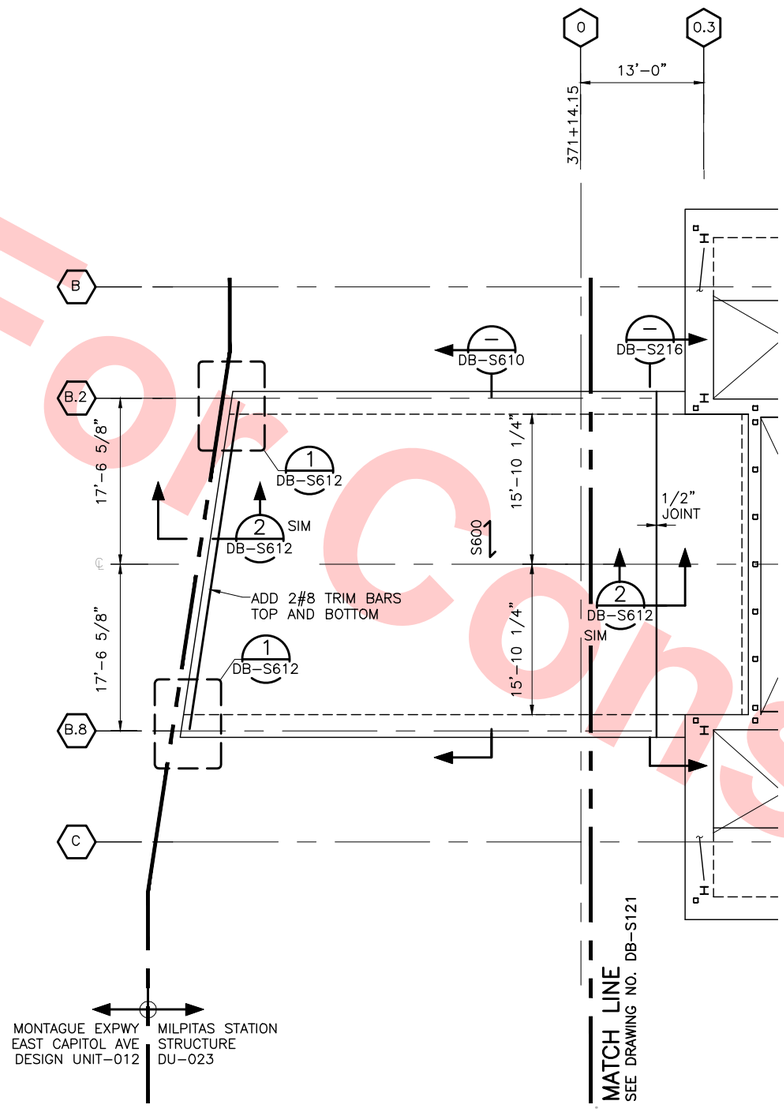

CONCOURSE LEVEL FRAMING PLAN

SCALE: 1/8"=1'–0"

DB–S070

8' 0' 8' 16'

GRAPHIC SCALE

KEY PLAN

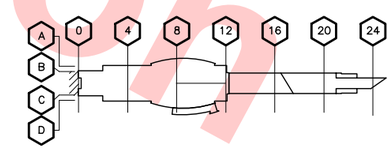

NOTE TO REVIEWER(S):
SEE SHEET DB-S120 FOR AREAS NOT TO REVIEW

Not For Construction

REV	DATE	BY	SUB	APP	DESCRIPTION
0	20130531				READINESS FOR CONSTRUCTION

DESIGNED BY J. REBER, S.E.
DRAWN BY P. DIAZ
CHECKED BY M. TARAZI
IN CHARGE M. TARAZI
DATE 20130531

REGISTERED PROFESSIONAL ENGINEER HUMAN FUAD TARAZI # S 3185 EXP. 6/30/14 STRUCTURAL STATE OF CALIFORNIA

Skanska Shimmick Herzog
1436 California Circle
Milpitas, California 95035
A Joint Venture

MFT CONSULTING ENGINEERS, INC. Anil Verma Associates, Inc.
1773 San Pablo Ave., Suite A3 (510) 222-4106
Pinole, CA 94564 Fax (510) 222-6418

Lockwood, Andrews & Newnam, Inc. A LEO A DALY COMPANY
T-Y-LIN INTERNATIONAL

SUBMITTED
APPROVED

VTA BART SILICON VALLEY
BART SILICON VALLEY BERRYESSA EXTENSION

LINE, TRACK, STATIONS AND SYSTEMS
DESIGN UNIT 023
MILPITAS STATION
FOUNDATION AND CONCOURSE
FRAMING PLAN
SHEET 9 OF 9

CADD FILENAME C700–S–DB–S129.dwg
SIZE D
SCALE 1/8" = 1'–0"
CONTRACT NO. C700
REV. 0
AREA CODE DB
SHEET NO. S129
PAGE NO. 0162

cad–02 Jul 05, 2013 – 1:50pm P:\BART Berryessa Extension Line\S – STRUCTURAL MILPITAS\WORK_6–10–2012\C700–S–DB–S129.dwg

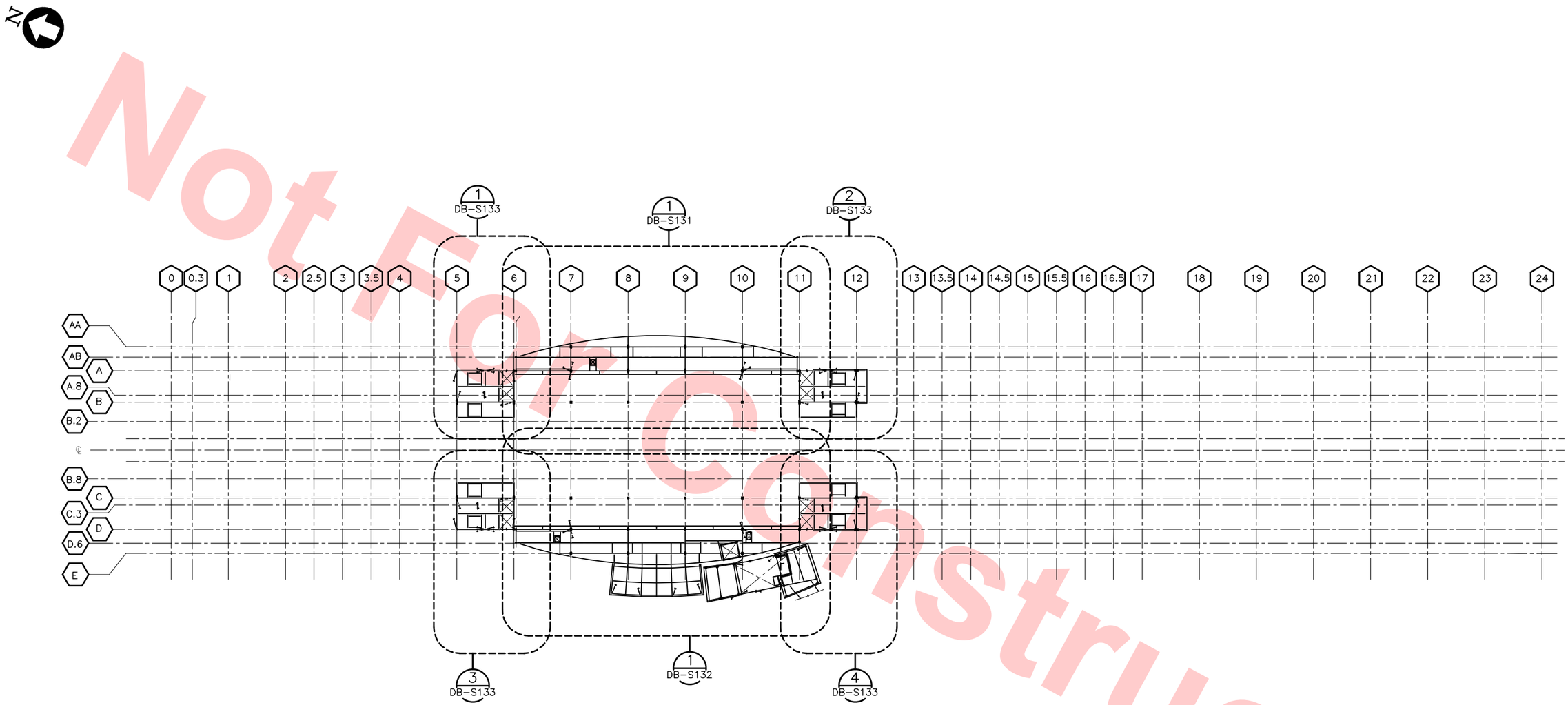

MEZZANINE LEVEL KEY PLAN

SCALE: 1/32"=1'-0"

DB-S130

Not For Construction

Santa Clara Valley Transportation Authority

____NO EXCEPTIONS TAKEN (NET)
____MAKE CORRECTIONS NOTED (MCN)
____AMEND AND RESUBMIT (A/R)

Any action shown above is subject to the terms of the contract and does not relieve the Contractor of any of its obligations under the contract, including design and detailing.

Contract No.: DB11002F

By: _____ Date: _____

8' 0' 8' 16'

GRAPHIC SCALE

REV	DATE	BY	SUB	APP	DESCRIPTION
0	20130710				READINESS FOR CONSTRUCTION

DESIGNED BY J. REBER, S.E.
DRAWN BY P. DIAZ
CHECKED BY M. TARAZI
IN CHARGE M. TARAZI
DATE 20130710

REGISTERED PROFESSIONAL ENGINEER SOHAM FUAD TAHER # S-3185 EXP. 6/30/14 STRUCTURAL STATE OF CALIFORNIA

Skanska Shimmick Herzog
1436 California Circle
Milpitas, California 95035
A Joint Venture

MFT Consulting Engineers, Inc. Anil Verma Associates, Inc.
1773 San Pablo Ave., Suite A3 (510) 222-4106
Pinole, CA 94564 Fax (510) 222-5415

SUBMITTED

Leslewood, Andrews & Newnam, Inc. A LBG & BALY COMPANY
T-Y-LIN INTERNATIONAL

APPROVED

VTA. BART SILICON VALLEY

BART SILICON VALLEY BERRYESSA EXTENSION

LINE, TRACK, STATIONS AND SYSTEMS
DESIGN UNIT 023
MILPITAS STATION
MEZZANINE LEVEL FRAMING
KEY PLAN

CADD FILENAME C700-S-DB-S130.dwg
SIZE D
SCALE 1/32" = 1'-0"
CONTRACT NO. C700
REV. 0
AREA CODE DB
SHEET NO. S130
PAGE NO. 0163

cad-02 Jul 05, 2013 - 1:50pm P:\BART Berryessa Extension Line\S - STRUCTURAL MILPITAS\WORK_6-10-2012\C700-S-DB-S130.dwg

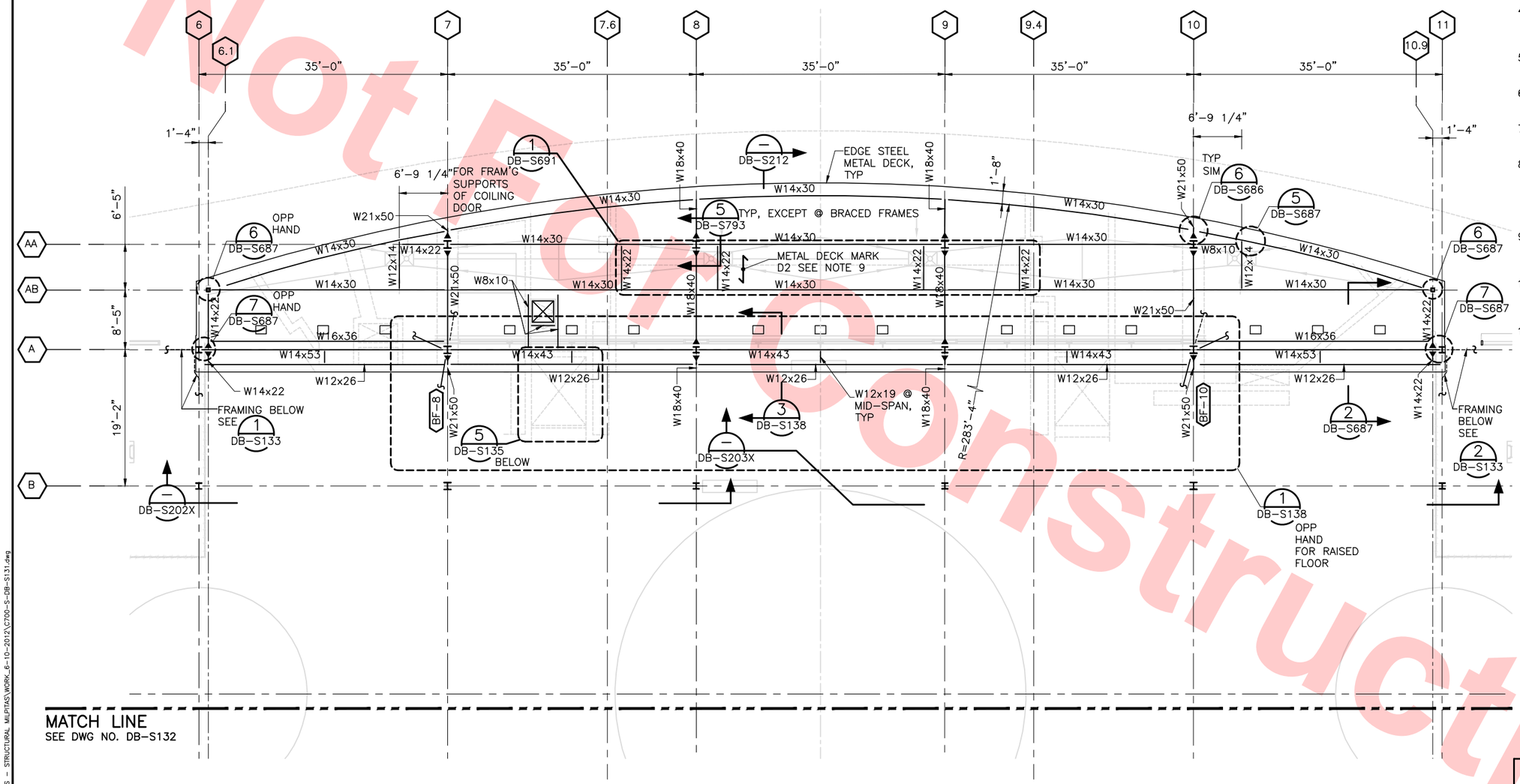

MATCH LINE
SEE DWG NO. DB-S132

EAST ENTRANCE ROOF FRAMING PLAN

SCALE: 1/8"=1'-0"

NOTES:

1. TOP OF STEEL IS 17'-3" ABOVE CONCOURSE ELEVATION OF 53.5'
2. VERIFY ALL OPENINGS AND DIMENSIONS WITH ARCHITECTURAL DRAWINGS.
3. REFER TO GENERAL NOTES, LEGEND, AND ABBREVIATIONS ON SHEET DB-S001X, DB-S002X, AND DB-S003X.
4. ALL DIMENSIONS ARE TO CENTERLINE OF COLUMNS OR FACE OF CONCRETE, TYP UNLESS NOTED OTHERWISE.
5. CONTRACTOR IS RESPONSIBLE FOR THE PLACEMENT OF ALL EMBEDDED ITEMS.
6. 500# INDICATES MECHANICAL UNIT WITH MAXIMUM OPERATING WEIGHT.
7. CONTRACTOR TO COORDINATE LOCATION OF FRAMING WITH EQUIPMENT SUPPLIER.
8. BF-1 INDICATES BRACED FRAME. ABOVE AND/OR BELOW SEE STEEL FRAMING ELEVATIONS DWGS DB-S501, DB-S502 & DB-S503 SHEETS.
9. FOR TYPICAL METAL DECK SECTIONS & DETAILS SEE DRAWINGS DB-S781, DB-S782, DB-S783 & DB-S784.
10. FOR TYPICAL STEEL SECTIONS & DETAILS SEE DRAWINGS DB-S791, DB-S792, DB-S793, DB-S794 & DB-S795.
11. FOR ALL COLUMN SIZES SEE DRAWINGS DB-S751X & DB-S752X.

Santa Clara Valley Transportation Authority

____NO EXCEPTIONS TAKEN (NET)
____MAKE CORRECTIONS NOTED (MCN)
____AMEND AND RESUBMIT (A/R)

Any action shown above is subject to the terms of the contract and does not relieve the Contractor of any of its obligations under the contract, including design and detailing.

Contract No.: DB11002F

By: _____ Date: _____

8' 0' 8' 16'
GRAPHIC SCALE

KEY PLAN

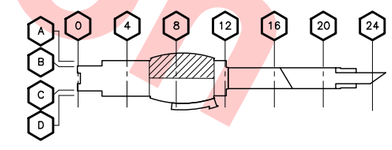

Not For Construction

REV	DATE	BY	SUB	APP	DESCRIPTION
0	20130710				READINESS FOR CONSTRUCTION
					REPLACED C700-S-DB-S801 REV P.

DESIGNED BY J. REBER, S.E.
DRAWN BY P. DIAZ
CHECKED BY M. TARAZI
IN CHARGE M. TARAZI
DATE 20130710

PROFESSIONAL ENGINEER STRUCTURAL STATE OF CALIFORNIA S-3185 EXP. 6/30/14

Skanska Shimmick Herzog
1436 California Circle
Milpitas, California 95035
A Joint Venture

MFT Consulting Engineers, Inc. Anil Verma Associates, Inc.
1773 San Pablo Ave., Suite A3 (510) 222-4106
Pinole, CA 94564 Fax (510) 222-4118
SUBMITTED

Lockwood, Andrews & Newnam, Inc. A LINA BALT COMPANY
T-Y-LIN INTERNATIONAL
APPROVED

VTA. BART SILICON VALLEY
BART SILICON VALLEY BERRYESSA EXTENSION

LINE, TRACK, STATIONS AND SYSTEMS
DESIGN UNIT 023
MILPITAS STATION
EAST ENTRANCE ROOF FRAMING PLAN

CADD FILENAME C700-S-DB-S131.dwg
SIZE D | SCALE 1/8" = 1'-0"
CONTRACT NO. C700 | REV. 0
AREA CODE DB | SHEET NO. S131 | PAGE NO. 0164

cad-02 Jul 05, 2013 - 1:50pm P:\BART Berryessa Extension Line\S - STRUCTURAL MILPITAS\WORK_6-10-2012\C700-S-DB-S131.dwg

NOTES:

1. REFER TO DWG DB-S131 FOR NOTES.
2. TOP OF STEEL IS 17'-3" ABOVE CONCOURSE ELEVATION OF 53.5'
3. ( )- INDICATES # SHEAR STUDS ON BEAM, SEE DRAWING DB-S784 FOR LAYOUT OF STUDS.

   (*) INDICATES PROVIDE SHEAR STUDS AT 12"OC SPACING.

   SEE DRAWING DB-S783 FOR SHEAR STUD NOTES.

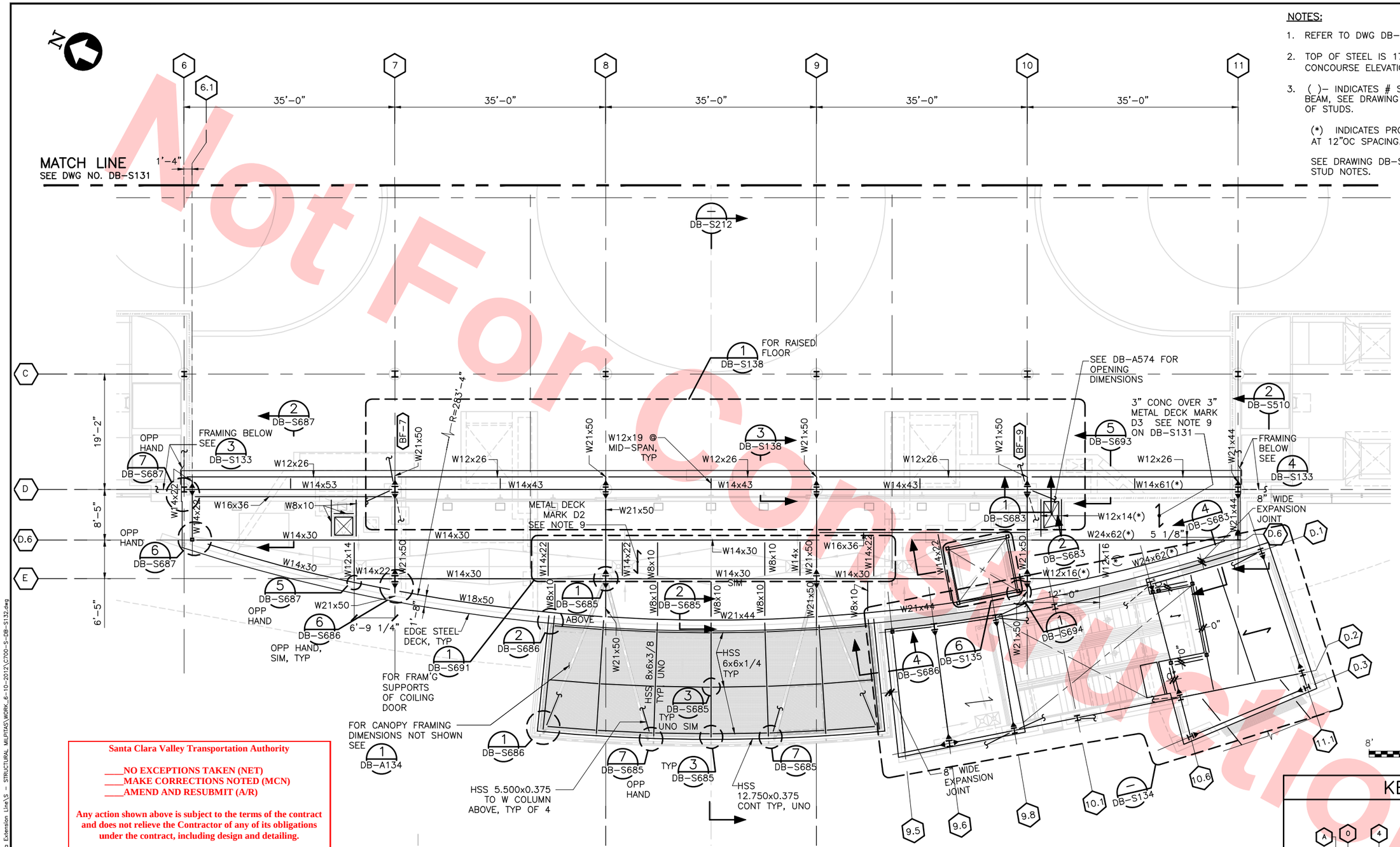

WEST ENTRANCE ROOF AND POC ENTRY FRAMING PLAN

SCALE: 1/8"=1'-0"

DB-S130

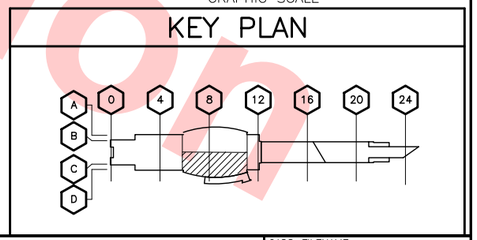

Santa Clara Valley Transportation Authority

____NO EXCEPTIONS TAKEN (NET)
____MAKE CORRECTIONS NOTED (MCN)
____AMEND AND RESUBMIT (A/R)

Any action shown above is subject to the terms of the contract and does not relieve the Contractor of any of its obligations under the contract, including design and detailing.

Contract No.: DB11002F

By: _____ Date: _____

REV	DATE	BY	SUB	APP	DESCRIPTION
0	20130710				READINESS FOR CONSTRUCTION

DESIGNED BY J. REBER, S.E.
DRAWN BY P. DIAZ
CHECKED BY M. TARAZI
IN CHARGE M. TARAZI
DATE 20130710

PROFESSIONAL ENGINEER SOHAIL FUAD QAZI # S-3185 EXP. 6/30/14 STRUCTURAL STATE OF CALIFORNIA

Skanska Shimmick Herzog
1436 California Circle Milpitas, California 95035
A Joint Venture

MFT Consulting Engineers, Inc. 1773 San Pablo Ave., Suite A3 Pinole, CA 94564 (510) 222-4106 Fax (510) 222-4616
Anil Verma Associates, Inc.
SUBMITTED

Leslewood, Andrews & Newnam, Inc. A SKA & BALY COMPANY
T-Y-LIN INTERNATIONAL
APPROVED

BART SILICON VALLEY
BART SILICON VALLEY BERRYESSA EXTENSION

LINE, TRACK, STATIONS AND SYSTEMS
DESIGN UNIT 023
MILPITAS STATION
WEST ENTRANCE ROOF AND POC ENTRY FRAMING PLAN

CADD FILENAME C700-S-DB-S132.dwg
SIZE D | SCALE 1/8" = 1'-0"
CONTRACT NO. C700 | REV. 0
AREA CODE DB | SHEET NO. S132 | PAGE NO. 0165

Not For Construction

cad-02 Jul 05, 2013 - 1:50pm P:\BART Berryessa Extension Line\S - STRUCTURAL MILPITAS\WORK_6-10-2012\C700-S-DB-S132.dwg

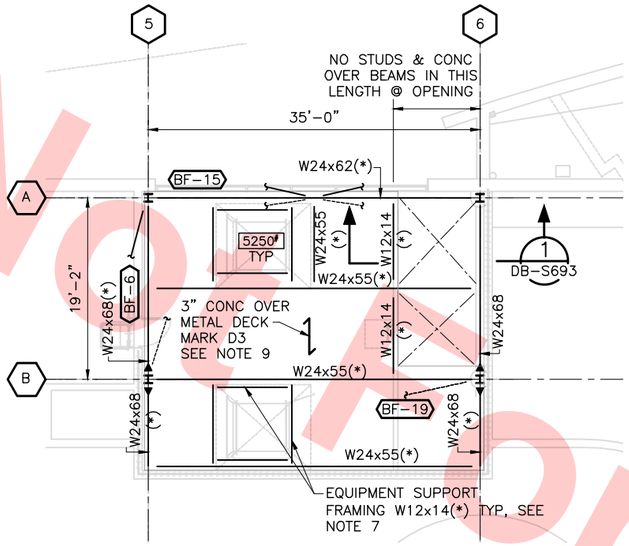

PARTIAL PLAN (1 / DB-S133)
SCALE: 1/8" = 1'-0"
DB-S130
DB-S131

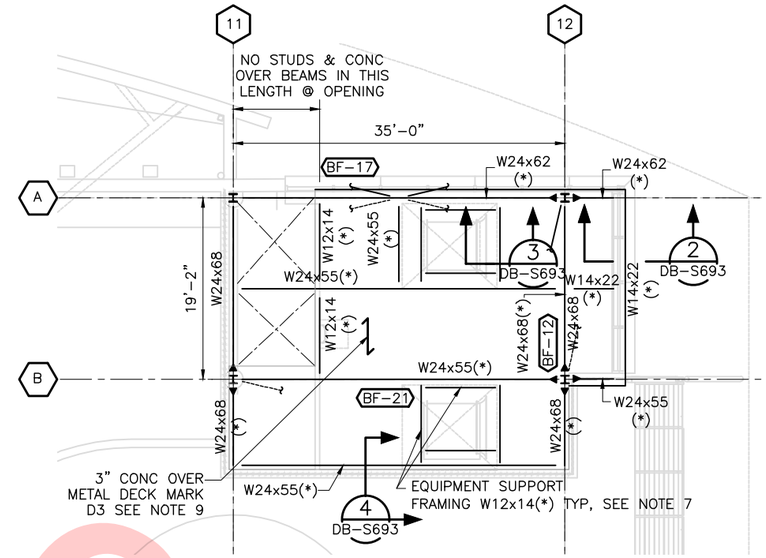

PARTIAL PLAN (2 / DB-S133)
SCALE: 1/8" = 1'-0"
DB-S130
DB-S131

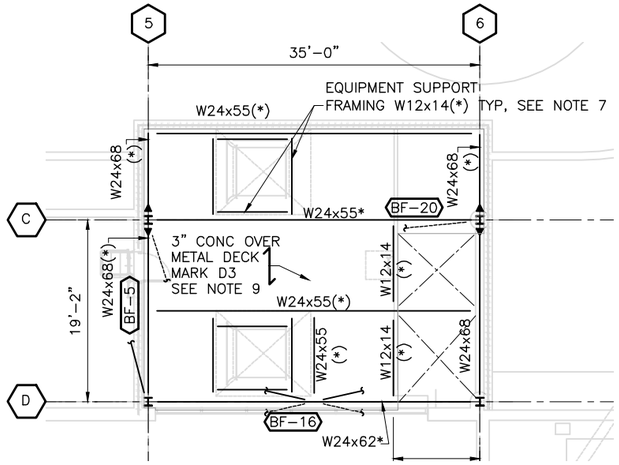

PARTIAL PLAN (3 / DB-S133)
SCALE: 1/8" = 1'-0"
DB-S130
DB-S132

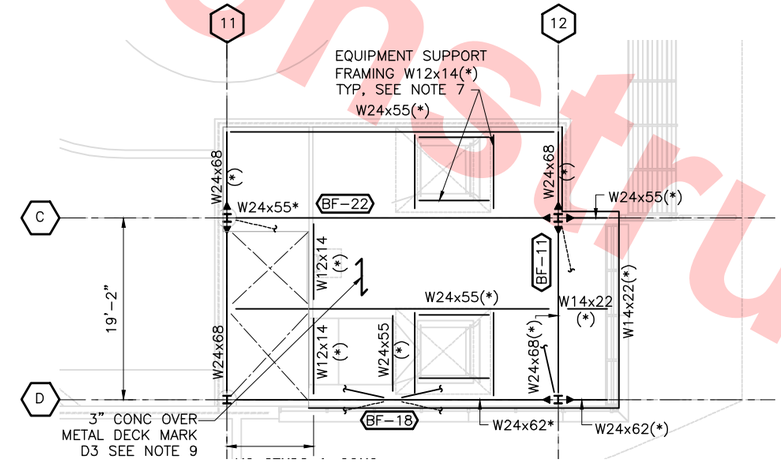

PARTIAL PLAN (4 / DB-S133)
SCALE: 1/8" = 1'-0"
DB-S130
DB-S132

NOTES:

1. TOP OF STEEL @ SMOKE CONTROL FAN ROOM LEVEL ELEVATION = 66.81' TYP UNO
2. VERIFY ALL OPENINGS AND DIMENSIONS WITH ARCHITECTURAL DRAWINGS.
3. REFER TO GENERAL NOTES, LEGEND, AND ABBREVIATIONS ON SHEET DB-S003X.
4. ALL DIMENSIONS ARE TO CENTERLINE OF COLUMNS OR FACE OF CONCRETE, TYP UNLESS NOTED OTHERWISE.
5. CONTRACTOR IS RESPONSIBLE FOR THE PLACEMENT OF ALL EMBEDDED ITEMS.
6. 5250# INDICATES MECHANICAL UNIT WITH MAXIMUM OPERATING WEIGHT PER DRAWING DB-M392.
7. COORDINATE LOCATION OF FRAMING WITH EQUIPMENT SUPPLIER.
8. BF-1 INDICATES BRACED FRAME ABOVE AND/OR BELOW. SEE "STEEL FRAMING ELEVATION" DRAWINGS DB-S501, DB-S502 & DB-S503 SHEETS.
9. FOR TYPICAL METAL DECK SECTIONS & DETAILS SEE DRAWINGS DB-S781, DB-S782, DB-S783 & DB-S784.
10. FOR TYPICAL STEEL SECTIONS & DETAILS SEE DRAWINGS DB-S791, DB-S792, DB-S793, DB-S794 & DB-S795.
11. FOR ALL COLUMN SIZES SEE DRAWINGS DB-S751X & DB-S752X.
12. ( )– INDICATES # SHEAR STUDS ON BEAM, SEE DRAWING DB-S784 FOR LAYOUT OF STUDS.

    (*) INDICATES PROVIDE SHEAR STUDS AT 12"OC SPACING.
13. SEE DRAWING DB-S783 FOR SHEAR STUD NOTES.

Santa Clara Valley Transportation Authority

____NO EXCEPTIONS TAKEN (NET)
____MAKE CORRECTIONS NOTED (MCN)
____AMEND AND RESUBMIT (A/R)

Any action shown above is subject to the terms of the contract and does not relieve the Contractor of any of its obligations under the contract, including design and detailing.

Contract No.: DB11002F

By: _____ Date: _____

8' 0' 8' 16'
GRAPHIC SCALE

KEY PLAN

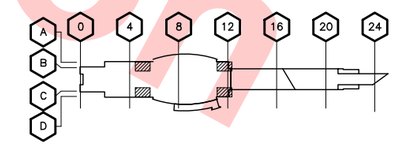

REV	DATE	BY	SUB	APP	DESCRIPTION
0	20130710				READINESS FOR CONSTRUCTION

DESIGNED BY J. REBER, S.E.
DRAWN BY P. DIAZ
CHECKED BY M. TARAZI
IN CHARGE M. TARAZI
DATE 20130710

REGISTERED PROFESSIONAL ENGINEER SUMAN FUAD TARAZI S-3185 EXP. 6/30/14 STRUCTURAL STATE OF CALIFORNIA

Skanska Shimmick Herzog
1436 California Circle
Milpitas, California 95035
A Joint Venture

MFT Consulting Engineers, Inc. Anil Verma Associates, Inc.
1773 San Pablo Ave., Suite A3 (510) 222-4106
Pinole, CA 94564 Fax (510) 222-4118
SUBMITTED

Lockwood, Andrews & Newnam, Inc. A LEO A DALY COMPANY
T-Y-LIN INTERNATIONAL
APPROVED

BART SILICON VALLEY
BART SILICON VALLEY BERRYESSA EXTENSION

LINE, TRACK, STATIONS AND SYSTEMS
DESIGN UNIT 023
MILPITAS STATION
SMOKE CONTROL FAN ROOM
FRAMING PLAN

CADD FILENAME C700-S-DB-S133.dwg
SIZE D | SCALE 1/8" = 1'-0"
CONTRACT NO. C700 | REV. 0
AREA CODE DB | SHEET NO. S133 | PAGE NO. 0166

cad-02 Jul 05, 2013 – 1:50pm P:\BART Berryessa Extension Line\S – STRUCTURAL MILPITAS\WORK_6-10-2012\C700-S-DB-S133.dwg

Not for Construction

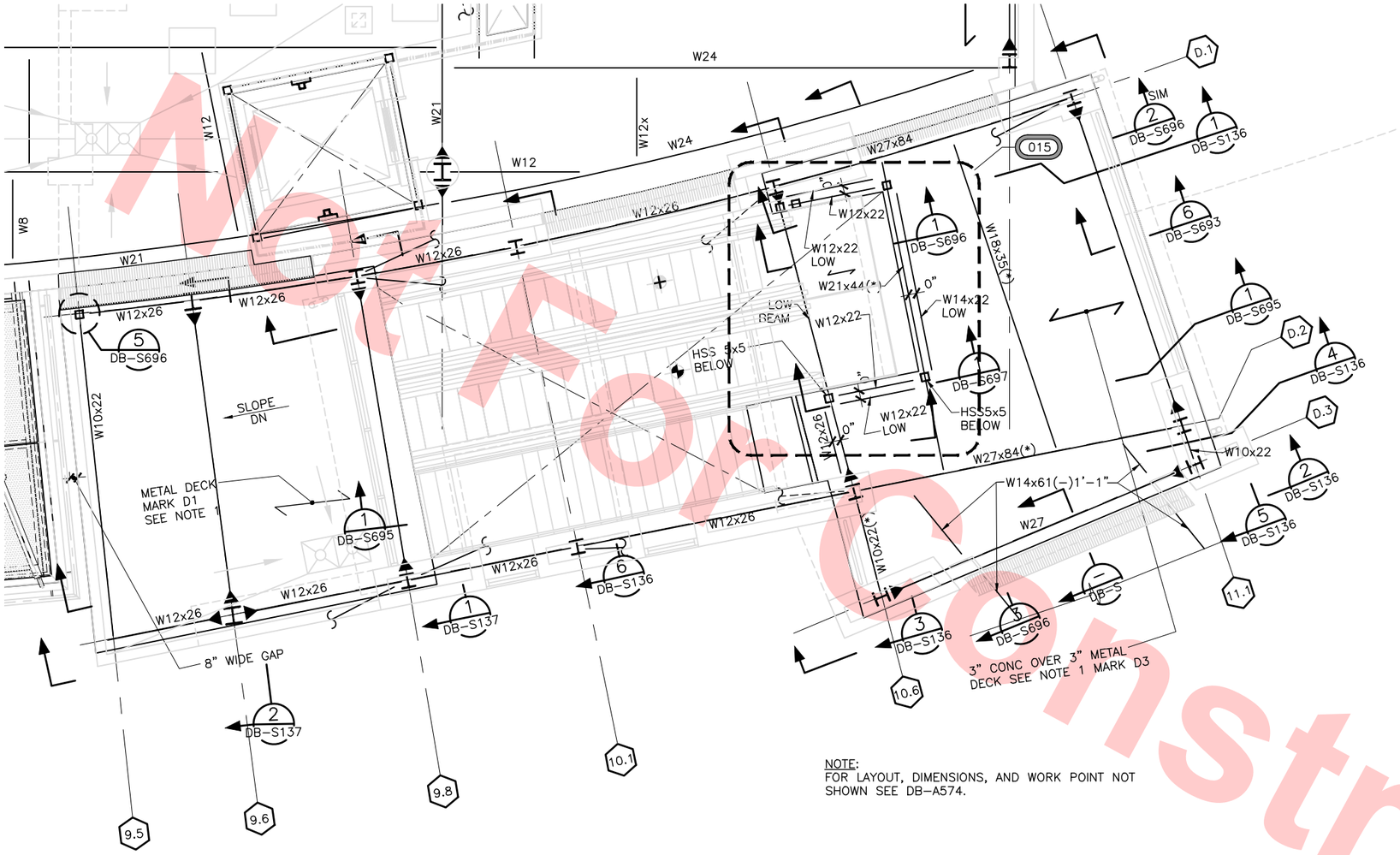

NOTE:
FOR LAYOUT, DIMENSIONS, AND WORK POINT NOT SHOWN SEE DB–A574.

POC ENTRY FRAMING PLAN

SCALE: 1/4"=1'–0"
DB–S132

NOTES:

1. FOR FRAMING NOTES, SEE DRAWING NO DB–S131
2. FOR TOP OF STEEL ELEVATION, SEE DB–S136
3. FOR BEAM SIZES AT MOMENT FRAMES SEE FRAME ELEVATIONS ON DB–S136 & DB–S137

Santa Clara Valley Transportation Authority

____NO EXCEPTIONS TAKEN (NET)
____MAKE CORRECTIONS NOTED (MCN)
____AMEND AND RESUBMIT (A/R)

Any action shown above is subject to the terms of the contract and does not relieve the Contractor of any of its obligations under the contract, including design and detailing.

Contract No.: DB11002F

By: _____ Date: _____

8' 0' 8' 16'
GRAPHIC SCALE

KEY PLAN

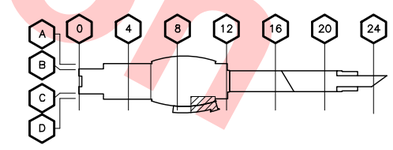

Not For Construction

REV	DATE	BY	SUB	APP	DESCRIPTION
0	20130710				READINESS FOR CONSTRUCTION

DESIGNED BY J. REBER, S.E.
DRAWN BY P. DIAZ
CHECKED BY M. TARAZI
IN CHARGE M. TARAZI
DATE 20130710

REGISTERED PROFESSIONAL ENGINEER SOHAM PUAD # S-3185 EXP. 6/30/14 STRUCTURAL STATE OF CALIFORNIA

Skanska Shimmick Herzog
1436 California Circle
Milpitas, California 95035
A Joint Venture

MFT Consulting Engineers, Inc. Anil Verma Associates, Inc.
1773 San Pablo Ave., Suite A3 (510) 222-4106
Pinole, CA 94564 Fax (510) 222-4116
SUBMITTED

Lockwood, Andrews & Newnam, Inc. A LAN & BALY COMPANY
T-Y-LIN INTERNATIONAL
APPROVED

BART SILICON VALLEY
BART SILICON VALLEY BERRYESSA EXTENSION

LINE, TRACK, STATIONS AND SYSTEMS
DESIGN UNIT 023
MILPITAS STATION
POC ENTRY PARTIAL FRAMING PLAN

CADD FILENAME C700–S–DB–S134.dwg
SIZE D | SCALE 1/4" = 1'–0"
CONTRACT NO. C700 | REV. 0
AREA CODE DB | SHEET NO. S134 | PAGE NO. 0167

cad–02 Jul 05, 2013 – 1:50pm P:\BART Berryessa Extension Line\S – STRUCTURAL MILPITAS\WORK_6–10–2012\C700–S–DB–S134.dwg

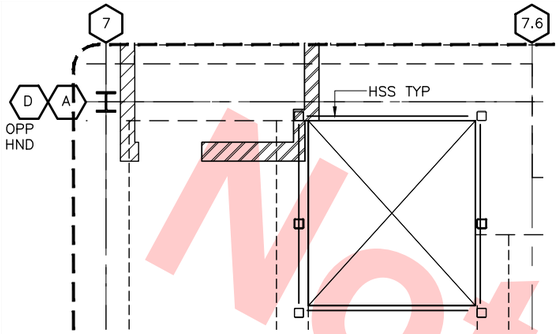

ELEV FRAMING@CONCOURSE (1)
SCALE: 1/4"=1'-0"
DB-S135 DB-S122

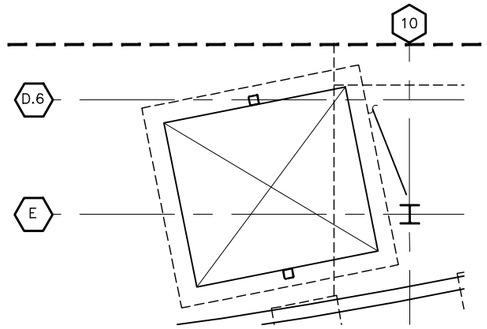

POC ELEV @ CONCOURSE (2)
SCALE: 1/4"=1'-0"
DB-S135 DB-S125

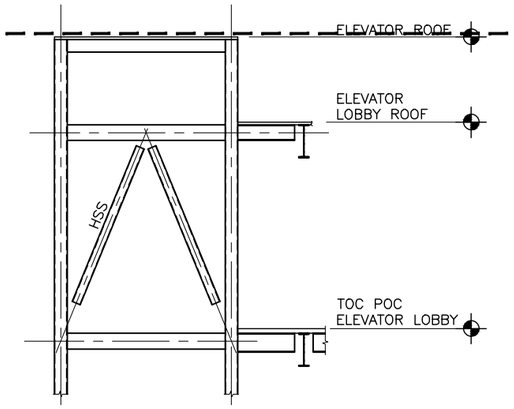

ELEVATION @ ELEVATOR (12)
SCALE: 1/4"=1'-0"
DB-S135

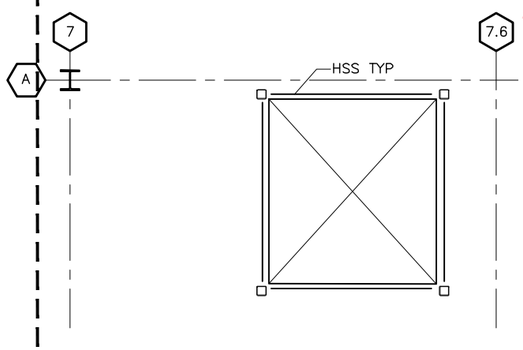

ELEV. INTERMEDIATE FRAMING (5)
SCALE: 1/4"=1'-0"
DB-S135 DB-S131

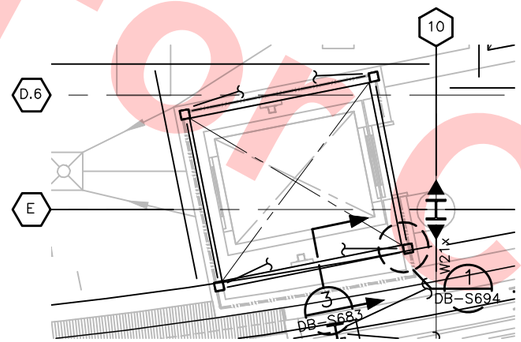

POC ELEV @ POC ENTRY (6)
SCALE: 1/4"=1'-0"
DB-S135 DB-S132

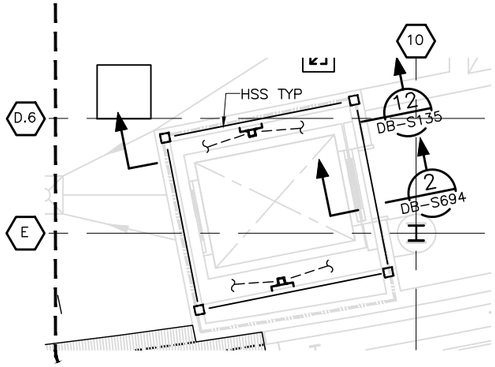

POC ELEVATION @ LOW ROOF FRAMING (9)
SCALE: 1/4"=1'-0"
DB-S135

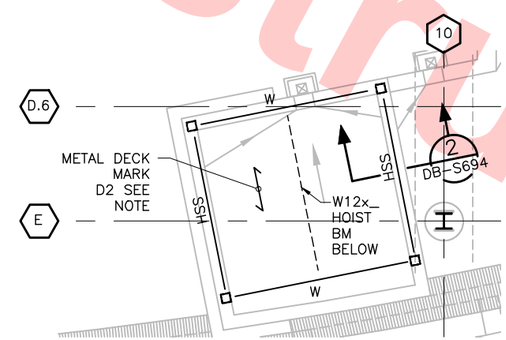

POC ELEVATOR @ ROOF (10)
SCALE: 1/4"=1'-0"
DB-S135 DB-S149

015

8' 0' 8' 16'
GRAPHIC SCALE

Not For Construction

Santa Clara Valley Transportation Authority

____NO EXCEPTIONS TAKEN (NET)
____MAKE CORRECTIONS NOTED (MCN)
____AMEND AND RESUBMIT (A/R)

Any action shown above is subject to the terms of the contract and does not relieve the Contractor of any of its obligations under the contract, including design and detailing.

Contract No.: DB11002F

By: _____ Date: _____

REV	DATE	BY	SUB	APP	DESCRIPTION
0	20130710				READINESS FOR CONSTRUCTION

DESIGNED BY J. REBER, S.E.
DRAWN BY P. DIAZ
CHECKED BY M. TARAZI
IN CHARGE M. TARAZI
DATE 20130710

REGISTERED PROFESSIONAL ENGINEER SOHAM PJAD # S-3185 EXP. 6/30/14 STRUCTURAL STATE OF CALIFORNIA

Skanska Shimmick Herzog
1436 California Circle
Milpitas, California 95035
A Joint Venture

MFT Consulting Engineers, Inc. Anil Verma Associates, Inc.
1773 San Pablo Ave., Suite A3 (510) 222-4106
Pinole, CA 94564 Fax (510) 222-4118
SUBMITTED

Lockwood, Andrews & Newnam, Inc. A URS & BALY COMPANY
T-Y-LIN INTERNATIONAL
APPROVED

BART SILICON VALLEY
BART SILICON VALLEY BERRYESSA EXTENSION

LINE, TRACK, STATIONS AND SYSTEMS DESIGN UNIT 023
MILPITAS STATION
ELEVATOR FRAMING PLANS AND SECTIONS

CADD FILENAME C700-S-DB-S135.dwg
SIZE D | SCALE 1/4" = 1'-0"
CONTRACT NO. C700 | REV. 0
AREA CODE DB | SHEET NO. S135 | PAGE NO. 0168

cad-02 Jul 05, 2013 - 1:51pm P:\BART Berryessa Extension Line\S - STRUCTURAL MILPITAS\WORK_6-10-2012\C700-S-DB-S135.dwg

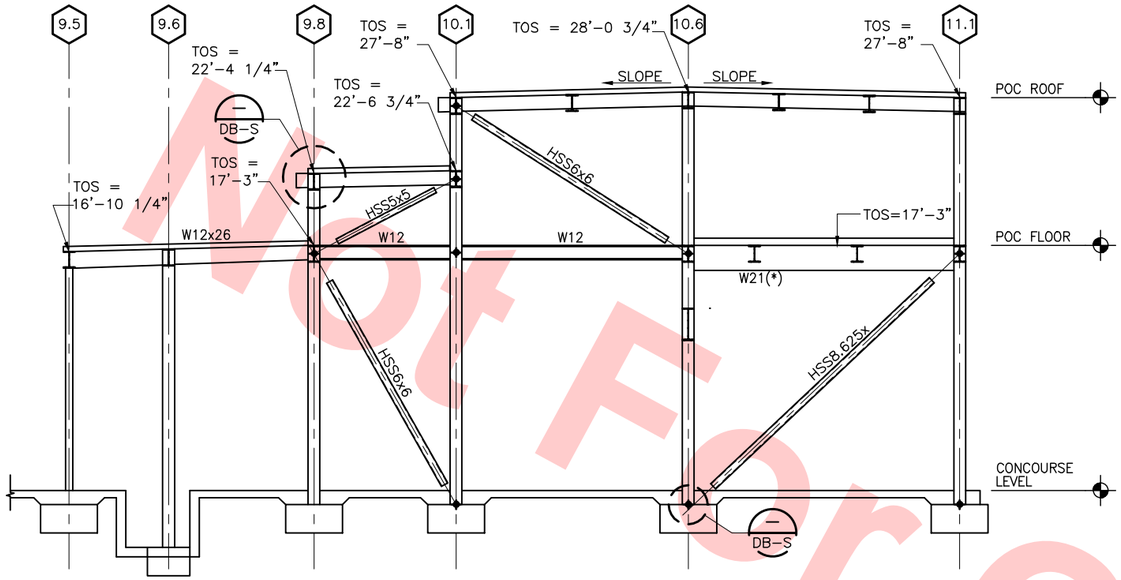

ELEVATION @ GRID D.1

SCALE: 3/16"=1'-0"

1 DB-S136

DB-S125
DB-S134
DB-S149

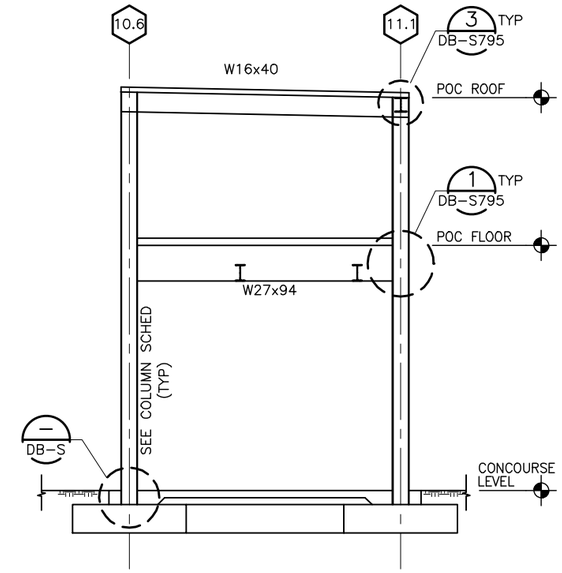

ELEVATION @ GRID D.3

SCALE: 3/16"=1'-0"

2 DB-S136

DB-S125
DB-S134
DB-S149

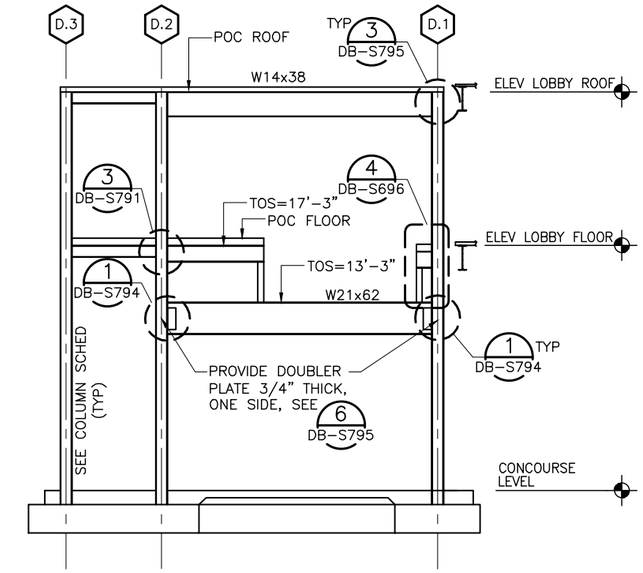

ELEVATION @ GRID 10.6

SCALE: 3/16"=1'-0"

3 DB-S136

DB-S125
DB-S134
DB-S149

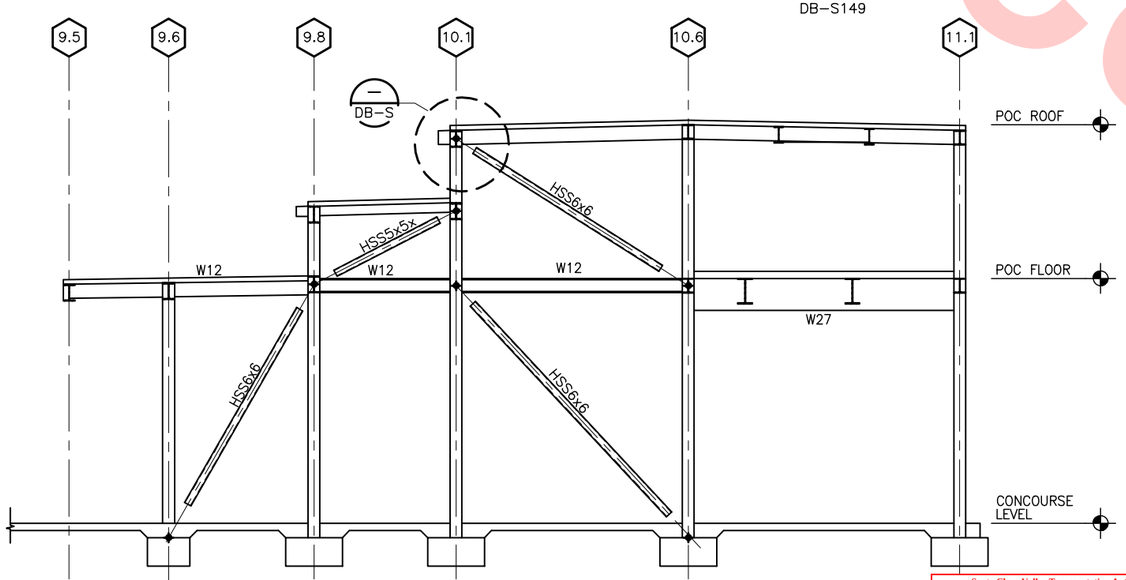

ELEVATION @ GRID D.2

SCALE: 3/16"=1'-0"

4 DB-S136

DB-S125
DB-S134
DB-S149

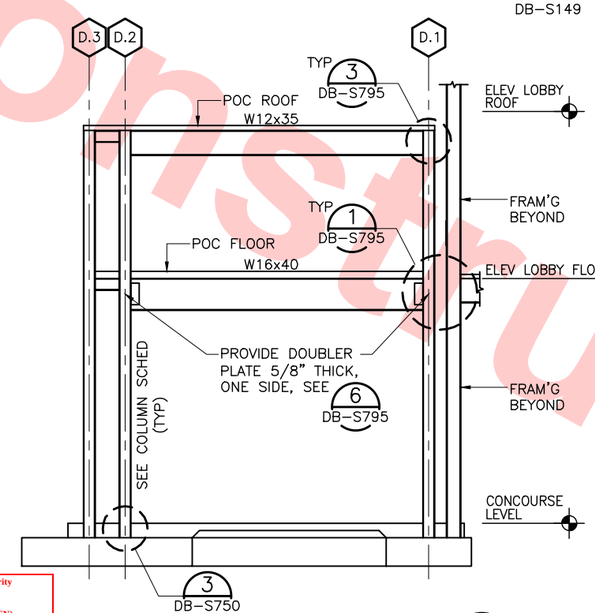

ELEVATION @ GRID 11.1

SCALE: 3/16"=1'-0"

5 DB-S136

DB-S125
DB-S134
DB-S149

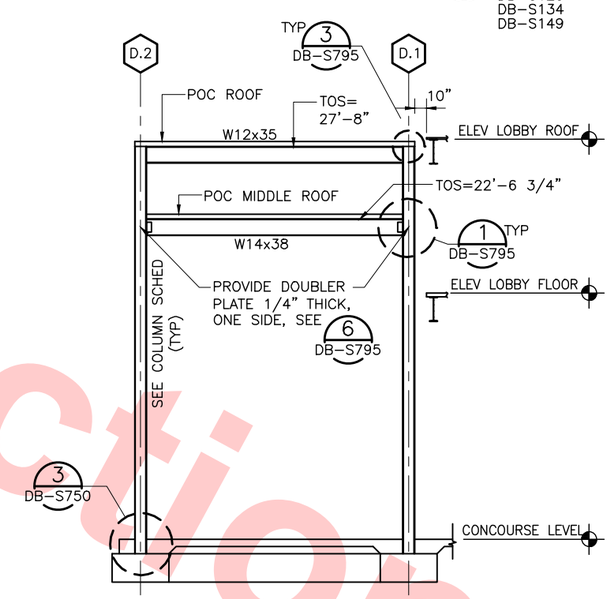

ELEVATION @ GRID 10.1

SCALE: 3/16"=1'-0"

6 DB-S136

DB-S125
DB-S134
DB-S149

Santa Clara Valley Transportation Authority

____NO EXCEPTIONS TAKEN (NET)
____MAKE CORRECTIONS NOTED (MCN)
____AMEND AND RESUBMIT (A/R)

Any action shown above is subject to the terms of the contract and does not relieve the Contractor of any of its obligations under the contract, including design and detailing.

Contract No.: DB11002F

By: _____ Date: _____

Not For Construction

REV	DATE	BY	SUB	APP	DESCRIPTION
0	20130710				READINESS FOR CONSTRUCTION

DESIGNED BY J. REBER, S.E.
DRAWN BY P. DIAZ
CHECKED BY M. TARAZI
IN CHARGE M. TARAZI
DATE 20130710

REGISTERED PROFESSIONAL ENGINEER SOHAIL FIAZ # S-3185 EXP. 6/30/14 STRUCTURAL STATE OF CALIFORNIA

Skanska Shimmick Herzog
1436 California Circle
Milpitas, California 95035
A Joint Venture

MFT Consulting Engineers, Inc. 1773 San Pablo Ave., Suite A3 Pinole, CA 94564 (510) 222-4106 Fax: (510) 222-4118
Anil Verma Associates, Inc.

SUBMITTED

Lockwood, Andrews & Newnam, Inc. A LAN & BALY COMPANY
T-Y-LIN INTERNATIONAL

APPROVED

BART SILICON VALLEY
BART SILICON VALLEY BERRYESSA EXTENSION

LINE, TRACK, STATIONS AND SYSTEMS
DESIGN UNIT 023
MILPITAS STATION
POC ENTRY FRAME ELEVATIONS
AND DETAILS
SHEET 1 OF 2

CADD FILENAME C700-S-DB-S136.dwg
SIZE D | SCALE 3/16" = 1'-0"
CONTRACT NO. C700 | REV. 0
AREA CODE DB | SHEET NO. S136 | PAGE NO. 0169

cad-02 Jul 05, 2013 - 1:51pm P:\BART Berryessa Extension Line\S - STRUCTURAL MILPITAS\WORK_6-10-2012\C700-S-DB-S136.dwg

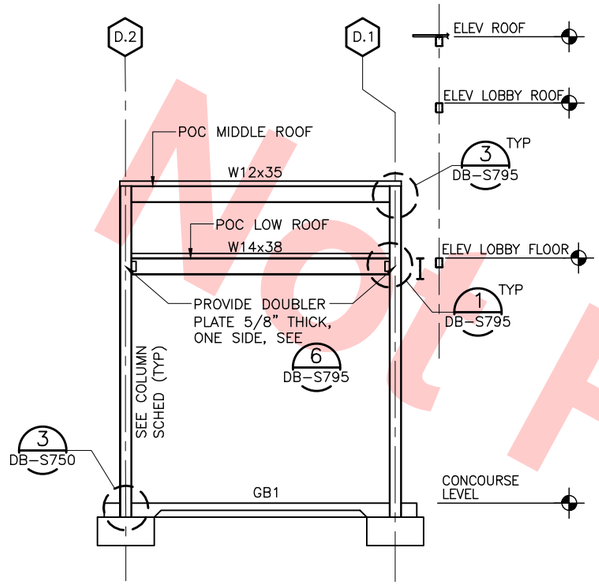

ELEVATION @ GRID 9.8 — 1 DB-S137

SCALE: 3/16"=1'-0"

DB-S125
DB-S134
DB-S149

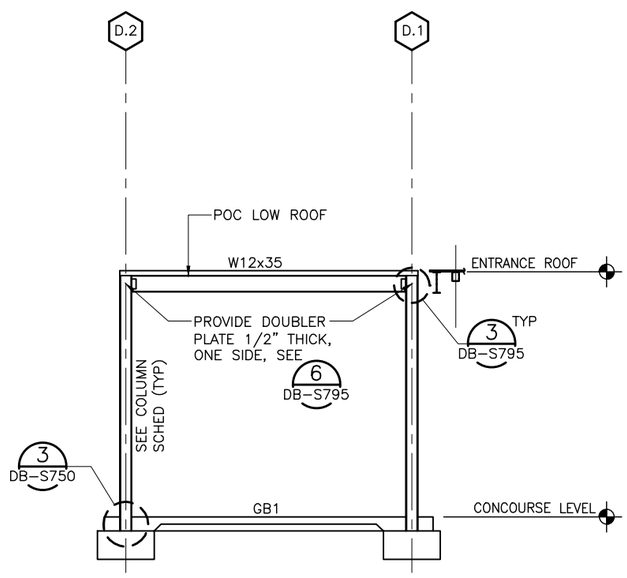

ELEVATION @ GRID 9.6 — 2 DB-S137

SCALE: 3/16"=1'-0"

DB-S125
DB-S134
DB-S149

Not For Construction

Santa Clara Valley Transportation Authority

____NO EXCEPTIONS TAKEN (NET)
____MAKE CORRECTIONS NOTED (MCN)
____AMEND AND RESUBMIT (A/R)

Any action shown above is subject to the terms of the contract and does not relieve the Contractor of any of its obligations under the contract, including design and detailing.

Contract No.: DB11002F

By: _____ Date: _____

REV	DATE	BY	SUB	APP	DESCRIPTION
0	20130710				READINESS FOR CONSTRUCTION

DESIGNED BY J. REBER, S.E.
DRAWN BY P. DIAZ
CHECKED BY M. TARAZI
IN CHARGE M. TARAZI
DATE 20130710

PROFESSIONAL ENGINEER — SOHAM FUAD TARAZI — # S-3185 EXP. 6/30/14 — STRUCTURAL — STATE OF CALIFORNIA

Skanska Shimmick Herzog
1436 California Circle
Milpitas, California 95035
A Joint Venture

MFT Consulting Engineers, Inc. — Anil Verma Associates, Inc.
1773 San Pablo Ave., Suite A3 (510) 222-4106
Pinole, CA 94564 Fax (510) 222-4418
SUBMITTED

Lockwood, Andrews & Newnam, Inc. — A LEO A DALY COMPANY
T-Y-LIN INTERNATIONAL
APPROVED

BART SILICON VALLEY
BART SILICON VALLEY BERRYESSA EXTENSION

LINE, TRACK, STATIONS AND SYSTEMS
DESIGN UNIT 023
MILPITAS STATION
POC ENTRY FRAME ELEVATIONS
AND DETAILS
SHEET 2 OF 2

CADD FILENAME C700-S-DB-S137.dwg
SIZE D | SCALE 3/8" = 1'-0"
CONTRACT NO. C700 | REV. 0
AREA CODE DB | SHEET NO. S137 | PAGE NO. 0170

cad-02 Jul 05, 2013 – 1:51pm P:\BART Berryessa Extension Line\S – STRUCTURAL MILPITAS\WORK_6-10-2012\C700-S-DB-S137.dwg

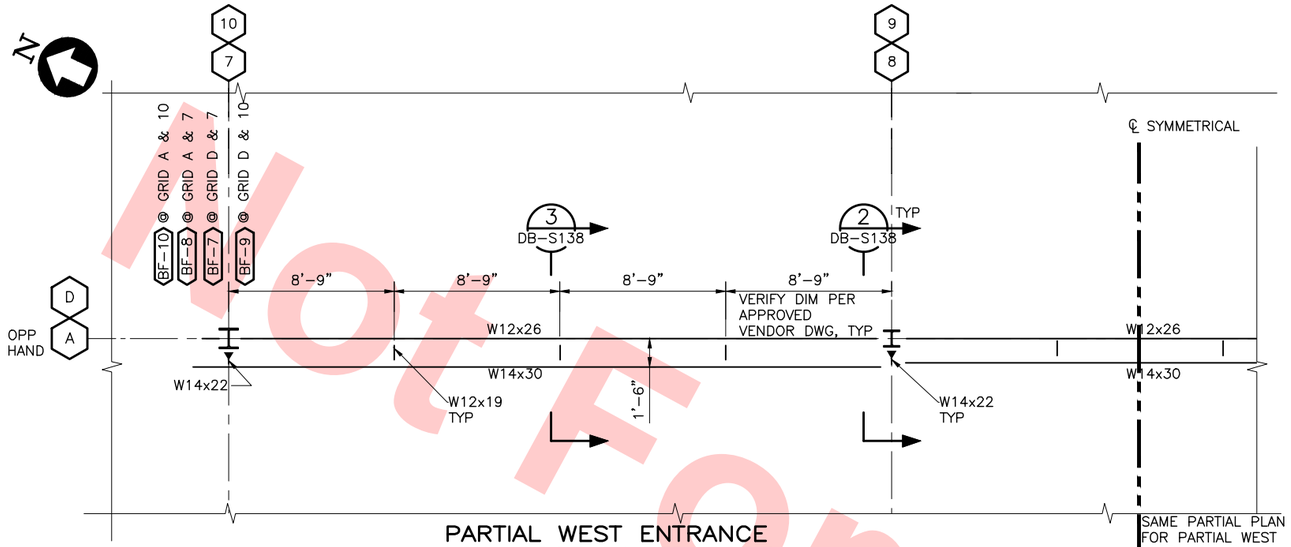

PARTIAL WEST ENTRANCE
LOW-ROOF RAISED ROOF
FRAMING PLAN

SCALE: 1/4"=1'-0"

1 DB-S138 DB-S131 DB-S132

SAME PARTIAL PLAN FOR PARTIAL WEST ENTRANCE ROOF FRAMING PLAN BETWEEN GRIDS 8 AND 10 BUT MIRRORED

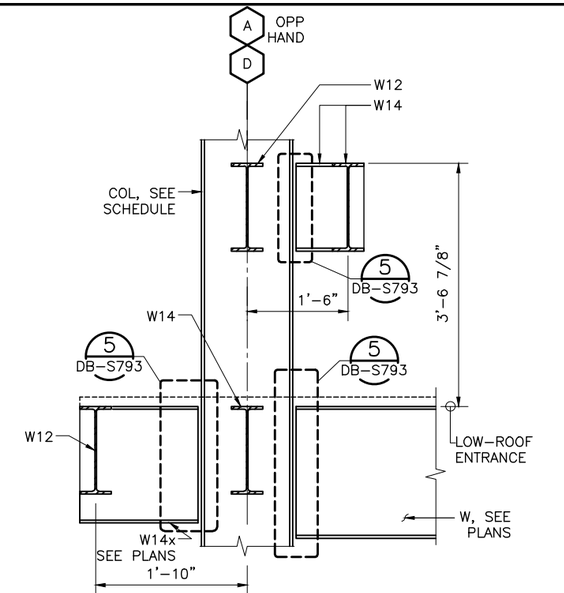

SECTION @ GRID LINES 7, 8, 9, AND 10

SCALE: 1"=1'-0"

2 DB-S138 DB-S138

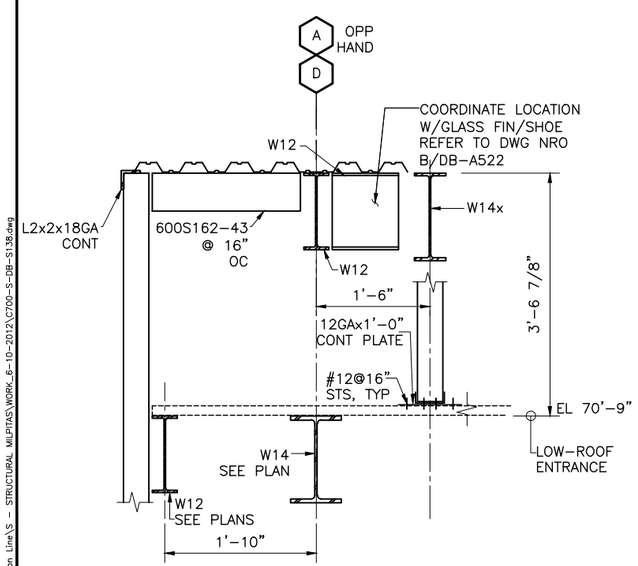

SECTION BETWEEN
GRID 7 & 10

SCALE: 1"=1'-0"

3 DB-S138 DB-S131 DB-S132 DB-S138

Santa Clara Valley Transportation Authority

____NO EXCEPTIONS TAKEN (NET)
____MAKE CORRECTIONS NOTED (MCN)
____AMEND AND RESUBMIT (A/R)

Any action shown above is subject to the terms of the contract and does not relieve the Contractor of any of its obligations under the contract, including design and detailing.

Contract No.: DB11002F

By: _____ Date: _____

Not For Construction

REV	DATE	BY	SUB	APP	DESCRIPTION
0	20130710				READINESS FOR CONSTRUCTION

DESIGNED BY J. REBER, S.E.
DRAWN BY P. DIAZ
CHECKED BY M. TARAZI
IN CHARGE M. TARAZI
DATE 20130710

REGISTERED PROFESSIONAL ENGINEER FUAD # S-3185 EXP. 6/30/14 STRUCTURAL STATE OF CALIFORNIA

Skanska Shimmick Herzog
1436 California Circle
Milpitas, California 95035
A Joint Venture

MFT Consulting Engineers, Inc. 1773 San Pablo Ave., Suite A3 Pinole, CA 94564 (510) 222-4106 Fax (510) 222-4618
Anil Verma Associates, Inc.
Lockwood, Andrews & Newnam, Inc. A LINA A BALY COMPANY
T-Y-LIN INTERNATIONAL

SUBMITTED _____ APPROVED _____

VTA BART SILICON VALLEY
BART SILICON VALLEY BERRYESSA EXTENSION

LINE, TRACK, STATIONS AND SYSTEMS
DESIGN UNIT 023
MILPITAS STATION
PARTIAL WEST ENTRANCE ROOF
FRAMING PLAN

CADD FILENAME C700-S-DB-S138.dwg
SIZE D | SCALE AS NOTED
CONTRACT NO. C700 | REV. 0
AREA CODE DB | SHEET NO. S138 | PAGE NO. 0171

cad-02 Jul 05, 2013 - 1:51pm P:\BART Berryessa Extension Line\S - STRUCTURAL MILPITAS\WORK_6-10-2012\C700-S-DB-S138.dwg

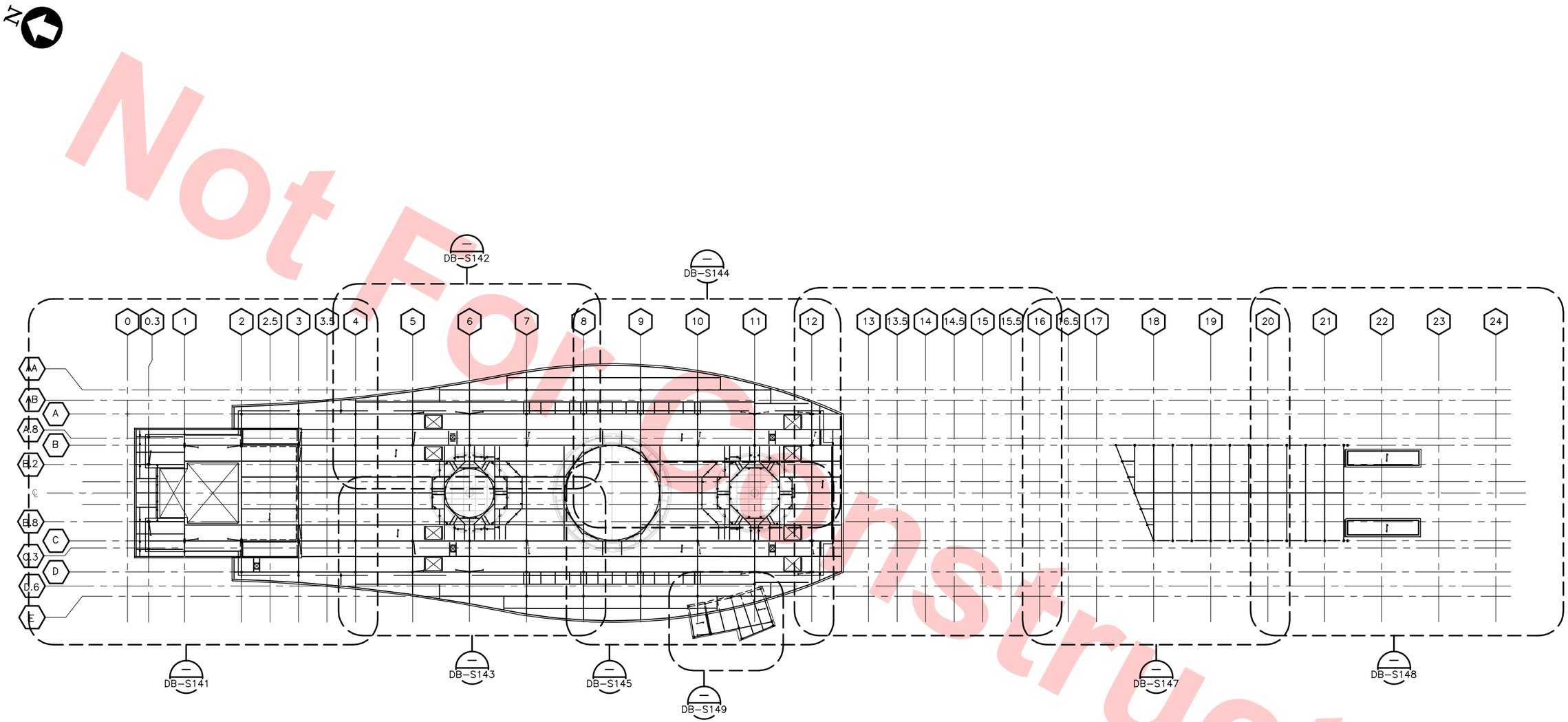

KEY PLAN ROOF LEVEL FRAMING

SCALE: 1/32"=1'-0"

DB-S140

Not For Construction

Santa Clara Valley Transportation Authority

____NO EXCEPTIONS TAKEN (NET)
____MAKE CORRECTIONS NOTED (MCN)
____AMEND AND RESUBMIT (A/R)

Any action shown above is subject to the terms of the contract and does not relieve the Contractor of any of its obligations under the contract, including design and detailing.

Contract No.: DB11002F

By: _____ **Date:** _____

32' 0' 32' 64'

GRAPHIC SCALE

REV	DATE	BY	SUB	APP	DESCRIPTION
0	20130710				READINESS FOR CONSTRUCTION

DESIGNED BY J. REBER, S.E.
DRAWN BY P. DIAZ
CHECKED BY M. TARAZI
IN CHARGE M. TARAZI
DATE 20130710

REGISTERED PROFESSIONAL ENGINEER SOHAIL FUAD TAZI S-3185 EXP. 9/30/14 STRUCTURAL STATE OF CALIFORNIA

Skanska Shimmick Herzog
1436 California Circle
Milpitas, California 95035
A Joint Venture

MFT Consulting Engineers, Inc. Anil Verma Associates, Inc.
1773 San Pablo Ave., Suite A3 (510) 222-4106
Pinole, CA 94564 Fax (510) 222-5618

SUBMITTED _____

Lockwood, Andrews & Newnam, Inc. A LAN & NAV COMPANY
T-Y-LIN INTERNATIONAL

APPROVED _____

VTA BART SILICON VALLEY
BART SILICON VALLEY BERRYESSA EXTENSION

LINE, TRACK, STATIONS AND SYSTEMS
DESIGN UNIT 023
MILPITAS STATION
ROOF LEVEL FRAMING
KEY PLAN

CADD FILENAME C700-S-DB-S140.dwg
SIZE D | SCALE 1/32" = 1'-0"
CONTRACT NO. C700 | REV. 0
AREA CODE DB | SHEET NO. S140 | PAGE NO. 0172

cad-02 Jul 05, 2013 - 1:51pm P:\BART Berryessa Extension Line\S - STRUCTURAL MILPITAS\WORK_6-10-2012\C700-S-DB-S140.dwg

Santa Clara Valley Transportation Authority

____NO EXCEPTIONS TAKEN (NET)
____MAKE CORRECTIONS NOTED (MCN)
____AMEND AND RESUBMIT (A/R)

Any action shown above is subject to the terms of the contract and does not relieve the Contractor of any of its obligations under the contract, including design and detailing.

Contract No.: DB11002F

By: _____ Date: _____

Not For Construction

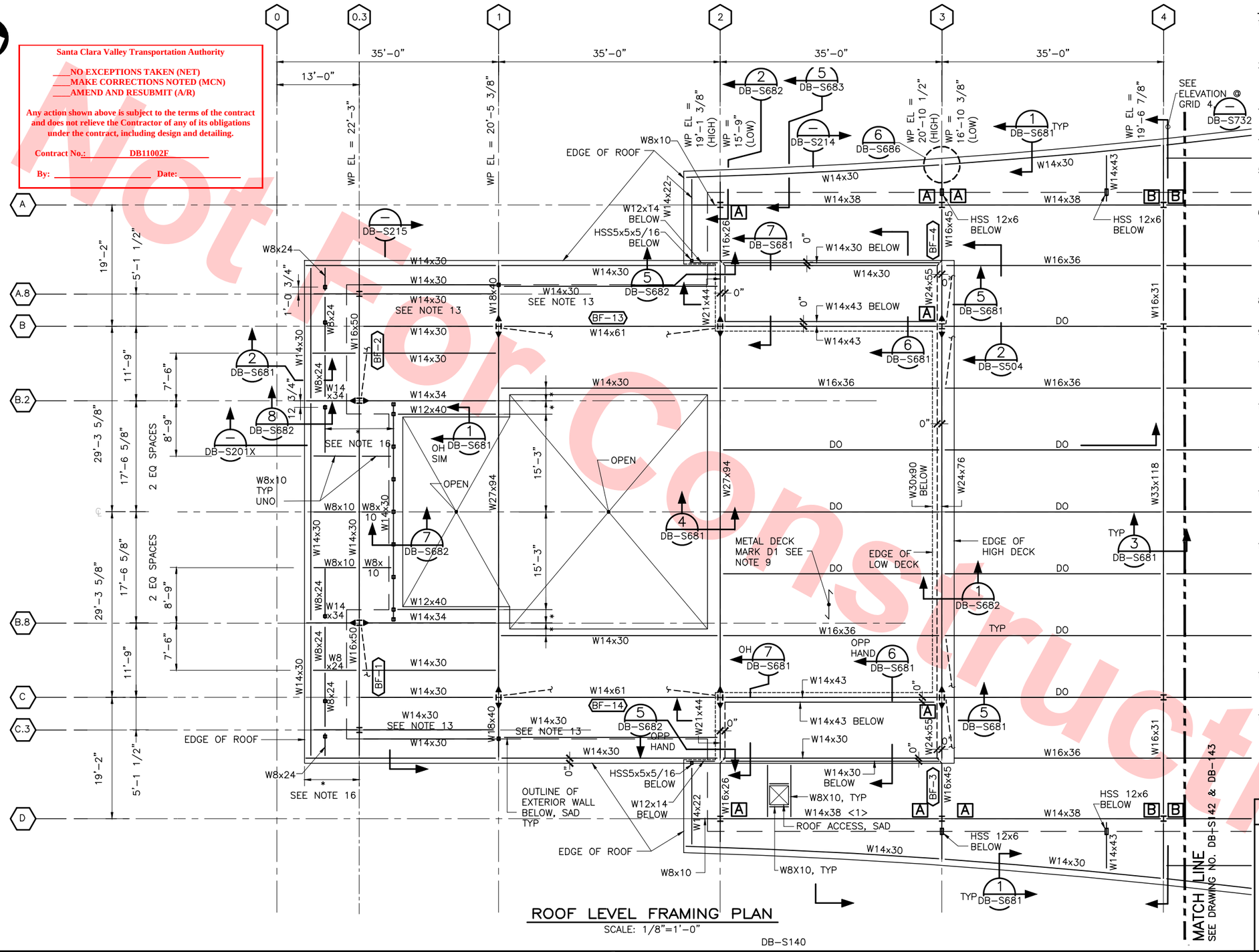

ROOF LEVEL FRAMING PLAN

SCALE: 1/8"=1'-0"

DB-S140

NOTES:

1. REFER TO GENERAL NOTES, LEGEND AND ABBREVIATIONS ON DRAWINGS DB–S001X, DB–S002X, AND DB–S003X.
2. VERIFY ALL DIMENSIONS & ELEVATIONS SHOWN WITH ARCH DRAWINGS AND INFORM ARCHITECT & VTA OF ANY DISCREPANCY.
3. SEE ARCHITECTURAL DRAWINGS FOR SIZE & LOCATION OF DECK PENETRATIONS.
4. SEE ARCHITECTURAL DRAWINGS FOR EDGE OF DECK LOCATIONS.
5. NO MECH EQUIPMENT DUCTWORKS, PIPING ETC SHALL BE HUNG FROM METAL DECKING UNLESS APPROVED BY THE EOR.
6. 500# INDICATES MECHANICAL UNIT WITH MAXIMUM OPERATING WEIGHT.
7. BF–1 INDICATES BRACED FRAME BELOW. SEE "STEEL FRAMING ELEVATION" DRAWINGS DB–S501, DB–S502 & DB–S503.
8. FOR STEEL TRUSSES, DENOTED (TRUSS T5) SEE DRAWINGS DB–S731 AND DB–S732.
9. FOR TYPICAL METAL DECK SECTIONS & DETAILS SEE DRAWINGS DB–S781, DB–S782, DB–S783 & DB–S784.
10. FOR TYPICAL STEEL SECTIONS & DETAILS SEE DRAWINGS DB–S791, DB–S792, DB–S793, DB–S794 & DB–S795.
11. ALL STEEL BEAMS SPANNING IN THE NORTH SOUTH DIRECTION SHALL FOLLOW THE RADIUS OF THE ROOF AS SHOWN ON THE ARCHITECTURAL DRAWINGS.
12. TOP OF STEEL (TOS) ELEVATION SHOWN IS WITH REFERENCE TO ELEVATION 0'–0" = 53.5' CONCOURSE LEVEL, TYPICAL FOR ALL ROOF LEVEL FRAMING PLANS.
13. LOCATE STEEL BEAM WITH GLASS WINDOW WALL BELOW. REFER DETAIL B / DB–A521
14. FOR STEEL BEAM AND CONNECTIONS DENOTED X PROVIDE 7/8"ø A325SC BOLTS. NUMBER OF BOLTS TO BE AS FOLLOWS:
    - A PER BOLT SCHEDULES ON DB–S791 & DB–S793
    - B 1 ROW OF 3 BOLTS & 2ND ROW OF 2 BOLTS.
    - C 2 ROWS OF 3 BOLTS EACH.
    - D 3 ROWS OF 3 BOLTS EACH.
15. WP EL. NOTED ON DWG ARE ABOVE LEVEL 53.5'. FOR RELATIONSHIP OF WP EL TO TOS SEE 9 / DB–S781
16. FOR DIMENSION NOT SHOWN MARKED WITH * SEE ARCH DRAWINGS.

8' 0' 8' 16'
GRAPHIC SCALE

KEY PLAN

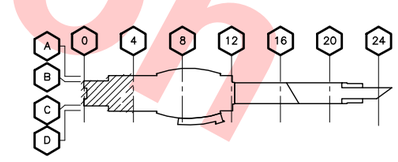

REV	DATE	BY	SUB	APP	DESCRIPTION
0	20130710				READINESS FOR CONSTRUCTION
					REPLACED C700–S–DB–S301 REV P.

DESIGNED BY J. REBER, S.E.
DRAWN BY P. DIAZ
CHECKED BY M. TARAZI
IN CHARGE M. TARAZI
DATE 20130710

PROFESSIONAL ENGINEER SOHAM FUAD PARIKH # S-3185 EXP. 6/30/14 STRUCTURAL STATE OF CALIFORNIA

Skanska Shimmick Herzog
1436 California Circle
Milpitas, California 95035
A Joint Venture

MFT Consulting Engineers, Inc. Anil Verma Associates, Inc.
1773 San Pablo Ave., Suite A3 (510) 222-4106
Pinole, CA 94564 Fax (510) 222-4418
SUBMITTED

Lockwood, Andrews & Newnam, Inc. A LEO A DALY COMPANY
T-Y-LIN INTERNATIONAL
APPROVED

VTA. BART SILICON VALLEY
BART SILICON VALLEY BERRYESSA EXTENSION

LINE, TRACK, STATIONS AND SYSTEMS
DESIGN UNIT 023
MILPITAS STATION
ROOF LEVEL
FRAMING PLAN
SHEET 1 OF 9

CADD FILENAME C700–S–DB–S141.dwg
SIZE D | SCALE 1/8" = 1'–0"
CONTRACT NO. C700 | REV. 0
AREA CODE DB | SHEET NO. S141 | PAGE NO. 0173

cad–02 Jul 08, 2013 – 9:51am P:\BART Berryessa Extension Line\S – STRUCTURAL MILPITAS\WORK_6–10–2012\C700–S–DB–S141.dwg

NOTES:

1. FOR ROOF LEVEL FRAMING NOTES, SEE DWG NO DB–S141.

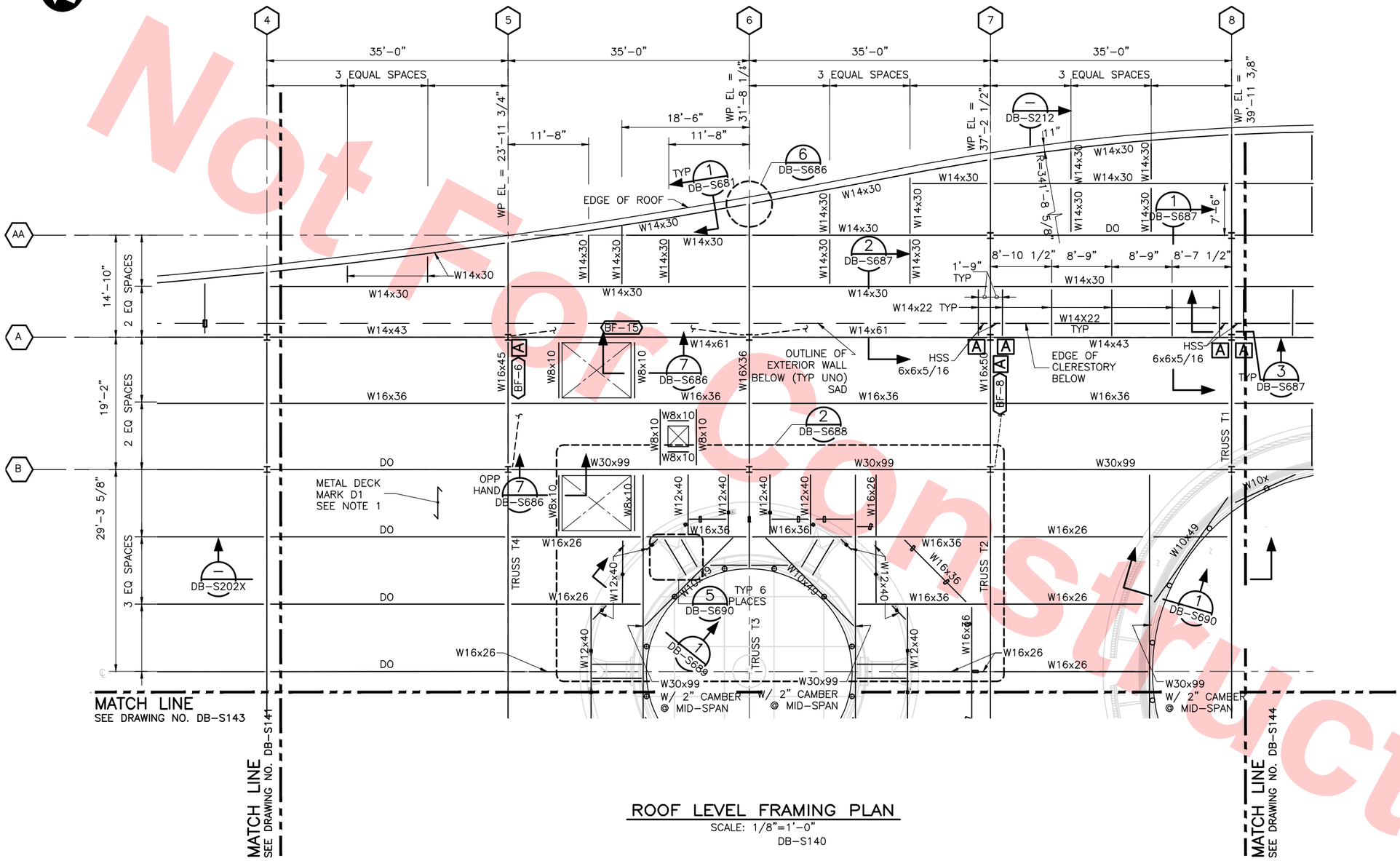

ROOF LEVEL FRAMING PLAN

SCALE: 1/8"=1'–0"

DB–S140

Not For Construction

Santa Clara Valley Transportation Authority

____NO EXCEPTIONS TAKEN (NET)
____MAKE CORRECTIONS NOTED (MCN)
____AMEND AND RESUBMIT (A/R)

Any action shown above is subject to the terms of the contract and does not relieve the Contractor of any of its obligations under the contract, including design and detailing.

Contract No.: DB11002F

By: _____ Date: _____

8' 0' 8' 16'

GRAPHIC SCALE

KEY PLAN

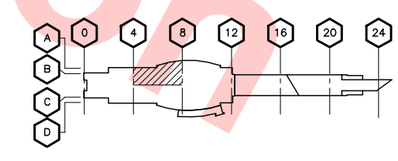

REV	DATE	BY	SUB	APP	DESCRIPTION
0	20130710				READINESS FOR CONSTRUCTION REPLACED C700–S–DB–S302 REV P.

DESIGNED BY J. REBER, S.E.
DRAWN BY P. DIAZ
CHECKED BY M. TARAZI
IN CHARGE M. TARAZI
DATE 20130710

REGISTERED PROFESSIONAL ENGINEER SOHAIL FUAD TAZI # S-3185 EXP. 6/30/14 STRUCTURAL STATE OF CALIFORNIA

Skanska Shimmick Herzog
1436 California Circle
Milpitas, California 95035
A Joint Venture

MFT Consulting Engineers, Inc. Anil Verma Associates, Inc.
1773 San Pablo Ave., Suite A3 (510) 222-4106
Pinole, CA 94564 Fax (510) 222-5118

SUBMITTED

Lockwood, Andrews & Newnam, Inc. A CH2M HILL COMPANY
T-Y-LIN INTERNATIONAL

APPROVED

VTA BART SILICON VALLEY

BART SILICON VALLEY BERRYESSA EXTENSION

LINE, TRACK, STATIONS AND SYSTEMS
DESIGN UNIT 023
MILPITAS STATION
ROOF LEVEL
FRAMING PLAN
SHEET 2 OF 9

CADD FILENAME C700–S–DB–S142.dwg
SIZE D | SCALE 1/8" = 1'–0"
CONTRACT NO. C700 | REV. 0
AREA CODE DB | SHEET NO. S142 | PAGE NO. 0174

cad–02 Jul 08, 2013 – 1:38pm P:\BART Berryessa Extension Line\S – STRUCTURAL MILPITAS\WORK_6–10–2012\C700–S–DB–S142.dwg

NOTES:

1. FOR ROOF LEVEL FRAMING NOTES, SEE DWG NO DB–S141.

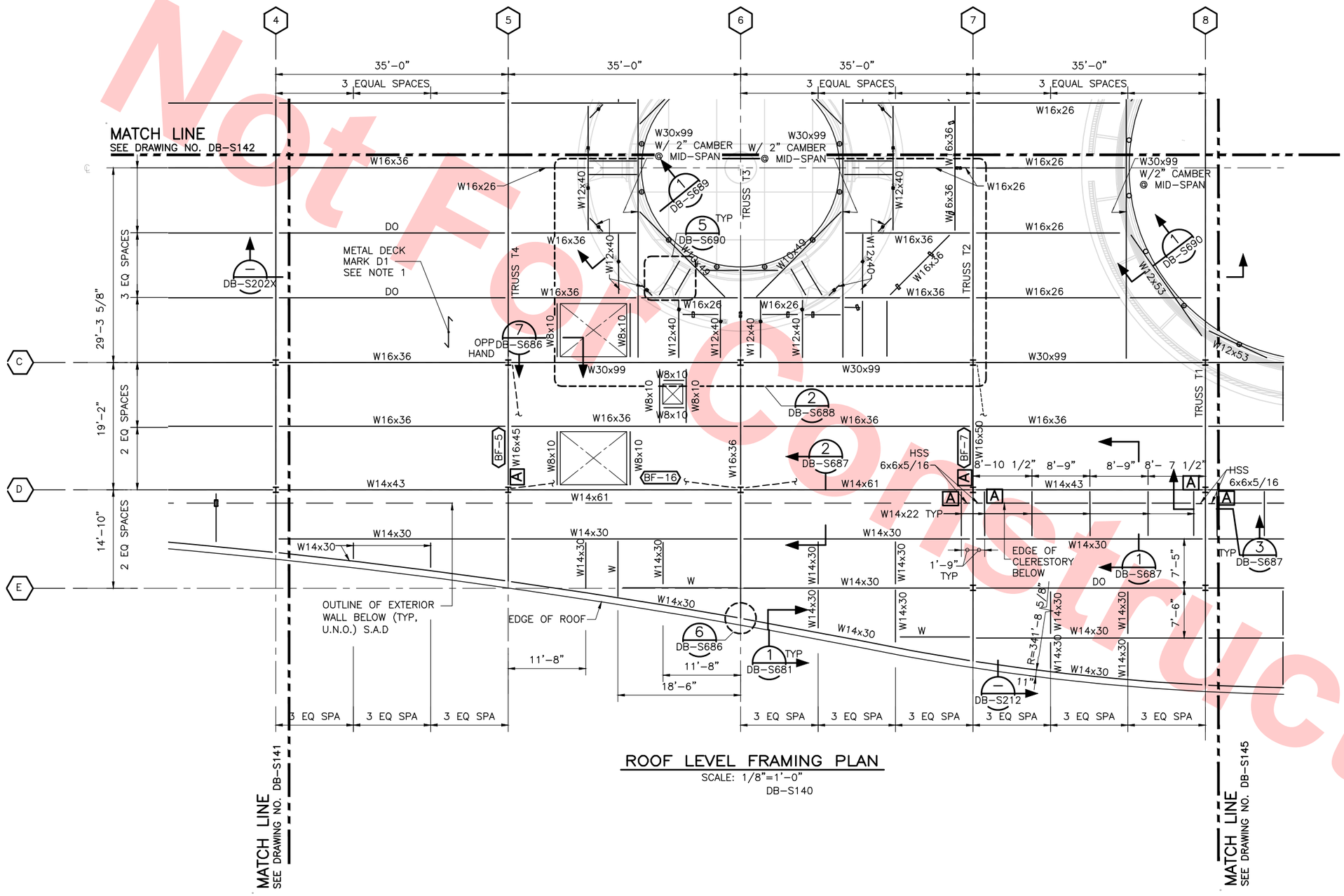

ROOF LEVEL FRAMING PLAN

SCALE: 1/8"=1'–0"

DB–S140

Santa Clara Valley Transportation Authority

____NO EXCEPTIONS TAKEN (NET)
____MAKE CORRECTIONS NOTED (MCN)
____AMEND AND RESUBMIT (A/R)

Any action shown above is subject to the terms of the contract and does not relieve the Contractor of any of its obligations under the contract, including design and detailing.

Contract No.: DB11002F

By: _____ Date: _____

8' 0' 8' 16'

GRAPHIC SCALE

KEY PLAN

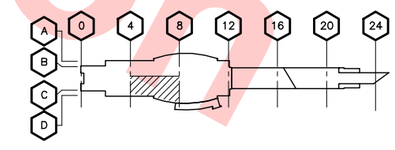

Not For Construction

REV	DATE	BY	SUB	APP	DESCRIPTION
0	20130710				READINESS FOR CONSTRUCTION
					REPLACED C700–S–DB–S303 REV P.

DESIGNED BY J. REBER, S.E.
DRAWN BY P. DIAZ
CHECKED BY M. TARAZI
IN CHARGE M. TARAZI
DATE 20130710

PROFESSIONAL ENGINEER FUAD SHAHAT S-3185 EXP. 6/30/14 STRUCTURAL STATE OF CALIFORNIA

Skanska Shimmick Herzog
1436 California Circle
Milpitas, California 95035
A Joint Venture

MFT Consulting Engineers, Inc. Anil Verma Associates, Inc.
1773 San Pablo Ave., Suite A3 (510) 222-4106
Pinole, CA 94564 Fax (510) 222-4118

SUBMITTED

Lockwood, Andrews & Newnam, Inc. A LAN & RALT COMPANY
T-Y-LIN INTERNATIONAL

APPROVED

VTA. BART SILICON VALLEY

BART SILICON VALLEY BERRYESSA EXTENSION

LINE, TRACK, STATIONS AND SYSTEMS
DESIGN UNIT 023
MILPITAS STATION
ROOF LEVEL
FRAMING PLAN
SHEET 3 OF 9

CADD FILENAME C700–S–DB–S143.dwg
SIZE D SCALE 1/8" = 1'–0"
CONTRACT NO. C700 REV. 0
AREA CODE DB SHEET NO. S143 PAGE NO. 0175

cad–02 Jul 08, 2013 – 1:38pm P:\BART Berryessa Extension Line\S – STRUCTURAL MILPITAS\WORK_6–10–2012\C700–S–DB–S143.dwg

NOTES:

1. FOR ROOF LEVEL FRAMING NOTES, SEE DWG NO DB–S141.

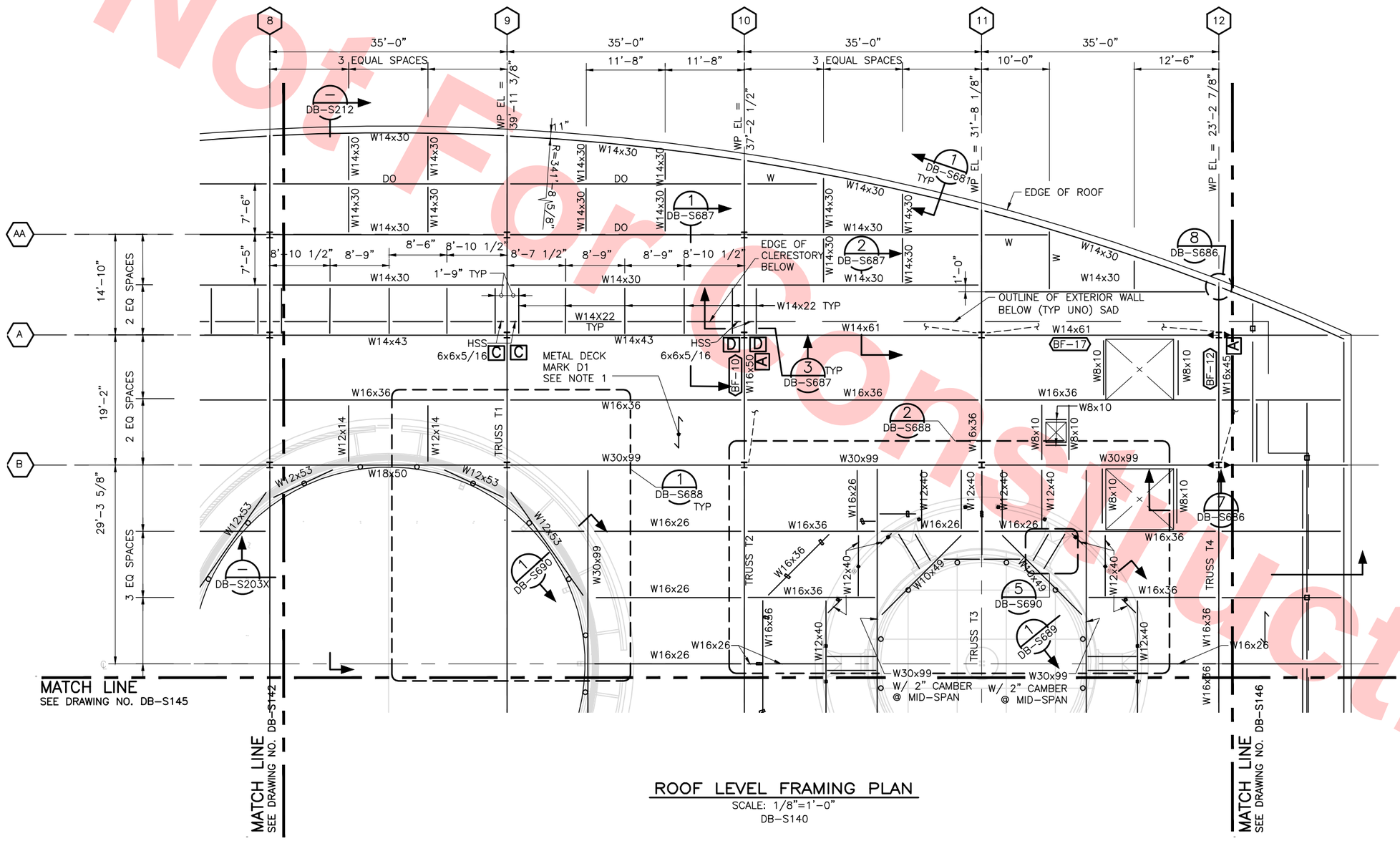

ROOF LEVEL FRAMING PLAN

SCALE: 1/8"=1'–0"

DB–S140

8' 0' 8' 16'

GRAPHIC SCALE

KEY PLAN

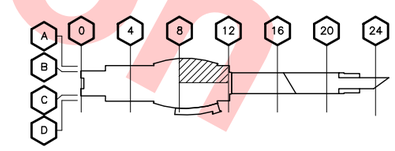

Santa Clara Valley Transportation Authority

____NO EXCEPTIONS TAKEN (NET)
____MAKE CORRECTIONS NOTED (MCN)
____AMEND AND RESUBMIT (A/R)

Any action shown above is subject to the terms of the contract and does not relieve the Contractor of any of its obligations under the contract, including design and detailing.

Contract No.: DB11002F

By: _____ **Date:** _____

Not For Construction

REV	DATE	BY	SUB	APP	DESCRIPTION
0	20130710				READINESS FOR CONSTRUCTION REPLACED C700–S–DB–S304 REV P.

DESIGNED BY J. REBER, S.E.
DRAWN BY P. DIAZ
CHECKED BY M. TARAZI
IN CHARGE M. TARAZI
DATE 20130710

REGISTERED PROFESSIONAL ENGINEER SOHAIL FIAZ TAHIR S-3185 EXP. 8/30/14 STRUCTURAL STATE OF CALIFORNIA

Skanska Shimmick Herzog
1436 California Circle
Milpitas, California 95035
A Joint Venture

MFT CONSULTING ENGINEERS, INC. Anil Verma Associates, Inc.
1773 San Pablo Ave., Suite A3
Pinole, CA 94564
(510) 222-4106
Fax (510) 222-4410

SUBMITTED

Lockwood, Andrews & Newnam, Inc. A LAN & BALY COMPANY
T·Y·LIN INTERNATIONAL

APPROVED

VTA BART SILICON VALLEY
BART SILICON VALLEY BERRYESSA EXTENSION

LINE, TRACK, STATIONS AND SYSTEMS
DESIGN UNIT 023
MILPITAS STATION
ROOF LEVEL
FRAMING PLAN
SHEET 4 OF 9

CADD FILENAME C700–S–DB–S144.dwg
SIZE D | SCALE 1/8" = 1'–0"
CONTRACT NO. C700 | REV. 0
AREA CODE DB | SHEET NO. S144 | PAGE NO. 0176

cad–02 Jul 08, 2013 – 1:38pm P:\BART Berryessa Extension Line\S – STRUCTURAL MILPITAS\WORK_6–10–2012\C700–S–DB–S144.dwg

NOTES:

1. FOR ROOF LEVEL FRAMING NOTES, SEE DWG NO DB-S141.

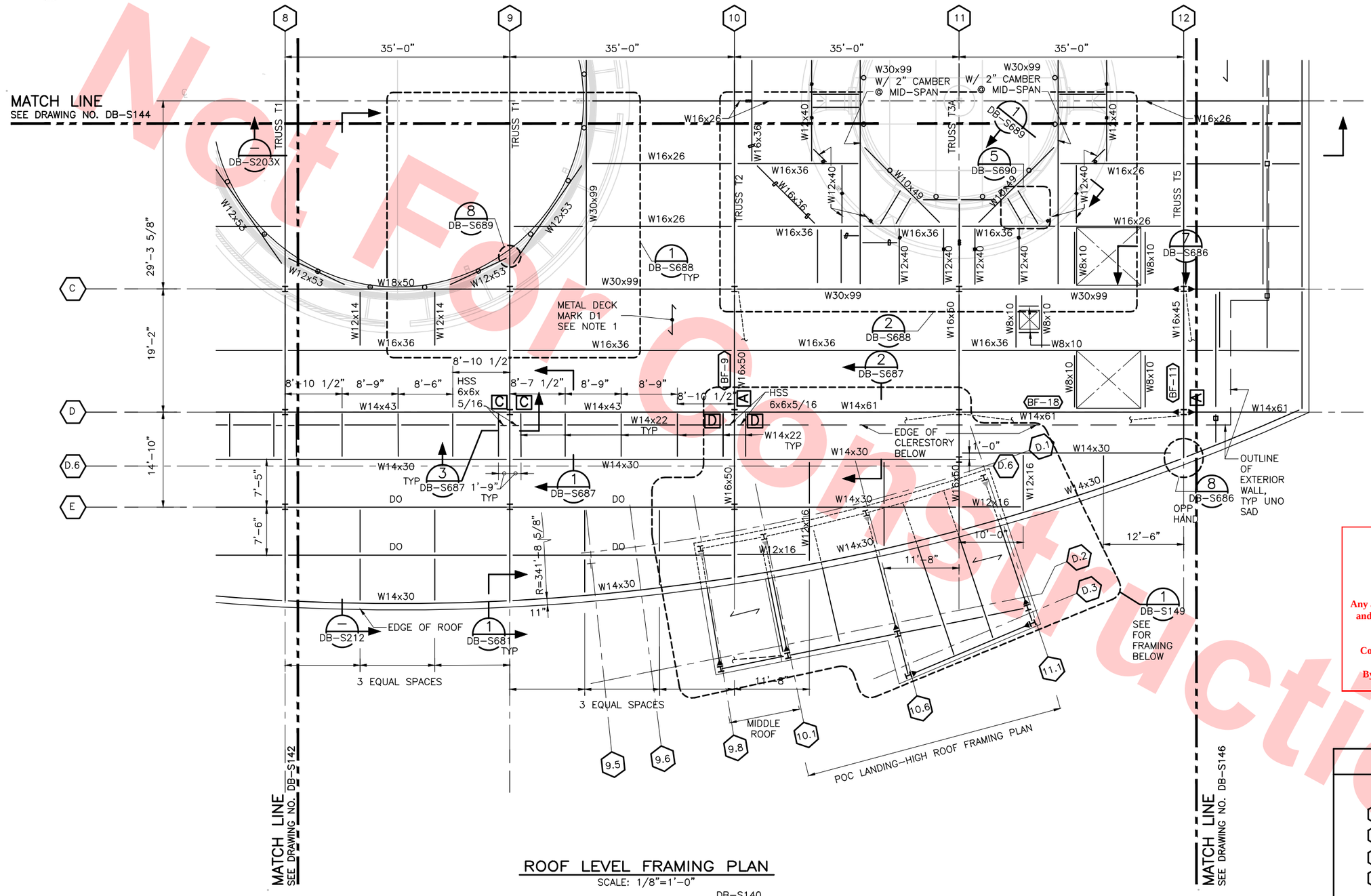

ROOF LEVEL FRAMING PLAN

SCALE: 1/8"=1'-0"

DB-S140

Santa Clara Valley Transportation Authority

____NO EXCEPTIONS TAKEN (NET)
____MAKE CORRECTIONS NOTED (MCN)
____AMEND AND RESUBMIT (A/R)

Any action shown above is subject to the terms of the contract and does not relieve the Contractor of any of its obligations under the contract, including design and detailing.

Contract No.: DB11002F

By: _____ Date: _____

8' 0' 8' 16'

GRAPHIC SCALE

KEY PLAN

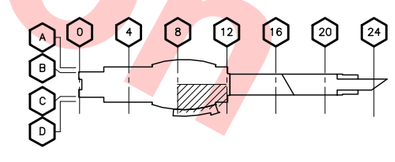

REV	DATE	BY	SUB	APP	DESCRIPTION
0	20130710				READINESS FOR CONSTRUCTION
					REPLACED C700-S-DB-S305 REV P.

DESIGNED BY J. REBER, S.E.
DRAWN BY P. DIAZ
CHECKED BY M. TARAZI
IN CHARGE M. TARAZI
DATE 20130710

REGISTERED PROFESSIONAL ENGINEER SOHAM FUAD TRABULSI # S-3185 EXP. 6/30/14 STRUCTURAL STATE OF CALIFORNIA

Skanska Shimmick Herzog
1436 California Circle
Milpitas, California 95035
A Joint Venture

MFT CONSULTING ENGINEERS, INC. Anil Verma Associates, Inc.
1773 San Pablo Ave., Suite A3 Pinole, CA 94564
(510) 222-4106 Fax: (510) 222-4110

SUBMITTED

Lockwood, Andrews & Newnam, Inc. A LAN & BALY COMPANY
T-Y-LIN INTERNATIONAL

APPROVED

BART SILICON VALLEY
BART SILICON VALLEY BERRYESSA EXTENSION

LINE, TRACK, STATIONS AND SYSTEMS
DESIGN UNIT 023
MILPITAS STATION
ROOF LEVEL
FRAMING PLAN
SHEET 5 OF 9

CADD FILENAME C700-S-DB-S145.dwg
SIZE D | SCALE 1/8" = 1'-0"
CONTRACT NO. C700 | REV. 0
AREA CODE DB | SHEET NO. S145 | PAGE NO. 0177

cad-02 Jul 08, 2013 - 1:38pm P:\BART Berryessa Extension Line\S - STRUCTURAL MILPITAS\WORK_6-10-2012\C700-S-DB-S145.dwg

Not For Construction

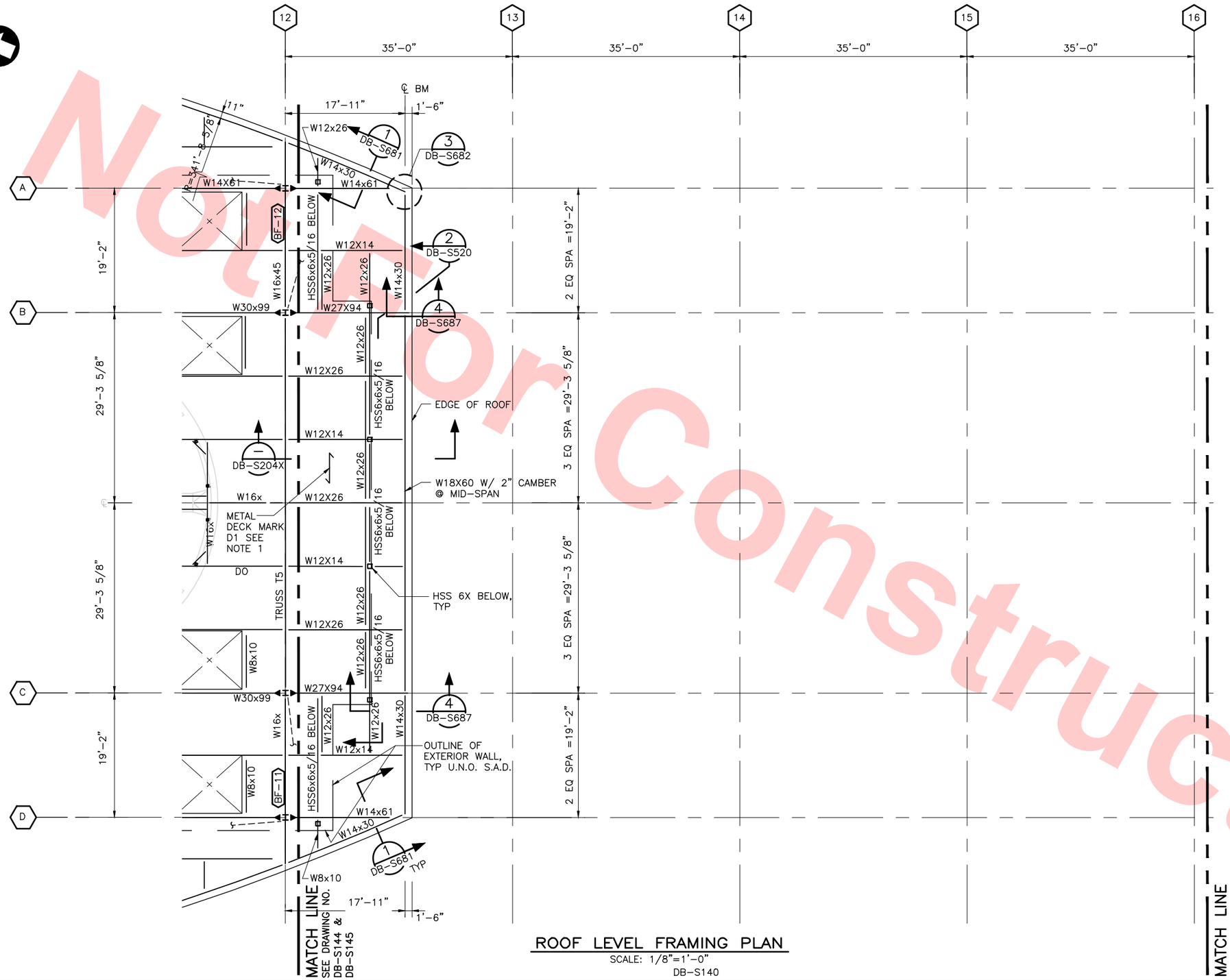

ROOF LEVEL FRAMING PLAN

SCALE: 1/8"=1'-0"

DB-S140

NOTES:

1. FOR ROOF LEVEL FRAMING NOTES, SEE DWG NO DB-S141.

Santa Clara Valley Transportation Authority

____NO EXCEPTIONS TAKEN (NET)
____MAKE CORRECTIONS NOTED (MCN)
____AMEND AND RESUBMIT (A/R)

Any action shown above is subject to the terms of the contract and does not relieve the Contractor of any of its obligations under the contract, including design and detailing.

Contract No.: DB11002F

By: _____ **Date:** _____

8' 0' 8' 16'

GRAPHIC SCALE

KEY PLAN

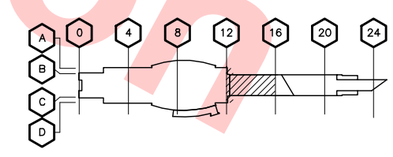

Not For Construction

REV	DATE	BY	SUB	APP	DESCRIPTION
0	20130710				READINESS FOR CONSTRUCTION
					REPLACED C700-S-DB-S306 REV P.

DESIGNED BY J. REBER, S.E.
DRAWN BY P. DIAZ
CHECKED BY M. TARAZI
IN CHARGE M. TARAZI
DATE 20130710

REGISTERED PROFESSIONAL ENGINEER SOHAIL FUAD TAZI S-3185 EXP. 8/30/14 STRUCTURAL STATE OF CALIFORNIA

Skanska Shimmick Herzog
1436 California Circle
Milpitas, California 95035
A Joint Venture

MFT Consulting Engineers, Inc. Anil Verma Associates, Inc.
1773 San Pablo Ave., Suite A3 (510) 222-4106
Pinole, CA 94564 Fax (510) 222-5410

Lockwood, Andrews & Newnam, Inc. A LEO A DALY COMPANY

T-Y-LIN INTERNATIONAL

SUBMITTED _____ APPROVED _____

VTA BART SILICON VALLEY

BART SILICON VALLEY BERRYESSA EXTENSION

LINE, TRACK, STATIONS AND SYSTEMS
DESIGN UNIT 023
MILPITAS STATION
ROOF LEVEL
FRAMING PLAN
SHEET 6 OF 9

CADD FILENAME C700-S-DB-S146.dwg
SIZE D | SCALE 1/8" = 1'-0"
CONTRACT NO. C700 | REV. 0
AREA CODE DB | SHEET NO. S146 | PAGE NO. 0178

cad-02 Jul 08, 2013 - 1:38pm P:\BART Berryessa Extension Line\S - STRUCTURAL MILPITAS\WORK_6-10-2012\C700-S-DB-S146.dwg

NOTES:

1. FOR ROOF LEVEL FRAMING NOTES, SEE DWG NO DB-S141.

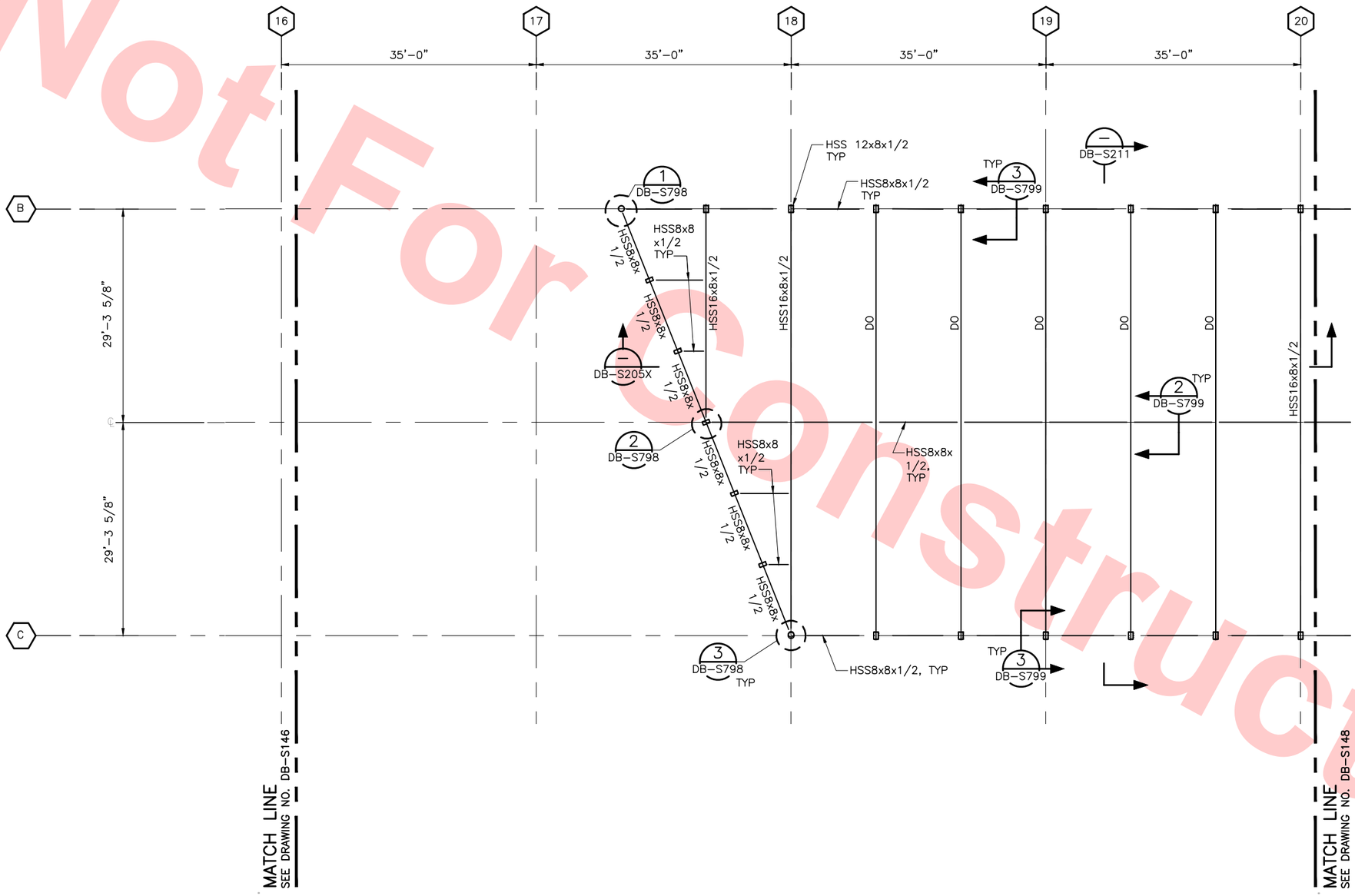

ROOF LEVEL FRAMING PLAN

SCALE: 1/8"=1'-0"

DB-S140

Santa Clara Valley Transportation Authority

____NO EXCEPTIONS TAKEN (NET)
____MAKE CORRECTIONS NOTED (MCN)
____AMEND AND RESUBMIT (A/R)

Any action shown above is subject to the terms of the contract and does not relieve the Contractor of any of its obligations under the contract, including design and detailing.

Contract No.: DB11002F

By: _____ Date: _____

8' 0' 8' 16'

GRAPHIC SCALE

KEY PLAN

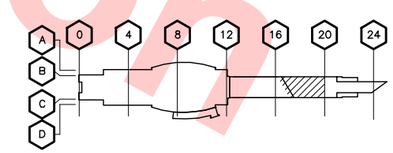

Not For Construction

REV	DATE	BY	SUB	APP	DESCRIPTION
0	20130710				READINESS FOR CONSTRUCTION REPLACED C700-S-DB-S307 REV P.

DESIGNED BY J. REBER, S.E.
DRAWN BY P. DIAZ
CHECKED BY M. TARAZI
IN CHARGE M. TARAZI
DATE 20130710

REGISTERED PROFESSIONAL ENGINEER SUHAN FUAD YAZJI # S-3185 EXP. 6/30/14 STATE OF CALIFORNIA STRUCTURAL

Skanska Shimmick Herzog
1436 California Circle
Milpitas, California 95035
A Joint Venture

MFT Consulting Engineers, Inc. Anil Verma Associates, Inc. 1773 San Pablo Ave., Suite A3 Pinole, CA 94564 (510) 222-4106 Fax (510) 222-4116

Lockwood, Andrews & Newnam, Inc. A LEO A DALY COMPANY

T·Y·LIN INTERNATIONAL

SUBMITTED _____ APPROVED _____

VTA BART SILICON VALLEY

BART SILICON VALLEY BERRYESSA EXTENSION

LINE, TRACK, STATIONS AND SYSTEMS
DESIGN UNIT 023
MILPITAS STATION
ROOF LEVEL
FRAMING PLAN
SHEET 7 OF 9

CADD FILENAME C700-S-DB-S147.dwg
SIZE D | SCALE 1/8" = 1'-0"
CONTRACT NO. C700 | REV. 0
AREA CODE DB | SHEET NO. S147 | PAGE NO. 0179

cad-02 Jul 05, 2013 - 1:52pm P:\BART Berryessa Extension Line\S - STRUCTURAL MILPITAS\WORK_6-10-2012\C700-S-DB-S147.dwg

NOTES:

1. FOR ROOF LEVEL FRAMING NOTES, SEE DWG NO DB–S141.

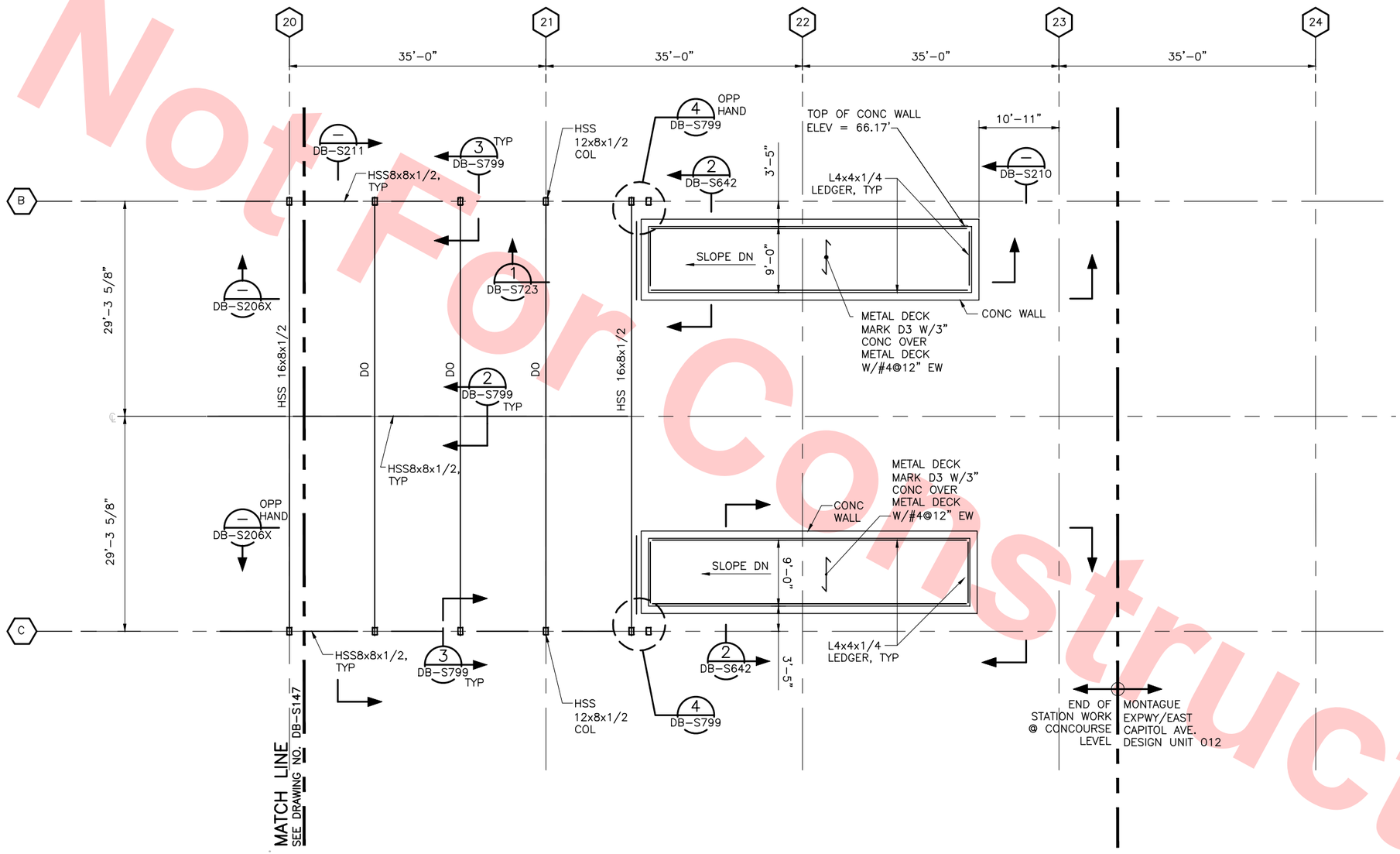

ROOF LEVEL FRAMING PLAN

SCALE: 1/8"=1'–0"

DB–S140

Santa Clara Valley Transportation Authority

____NO EXCEPTIONS TAKEN (NET)
____MAKE CORRECTIONS NOTED (MCN)
____AMEND AND RESUBMIT (A/R)

Any action shown above is subject to the terms of the contract and does not relieve the Contractor of any of its obligations under the contract, including design and detailing.

Contract No.: DB11002F

By: _____ **Date:** _____

8' 0' 8' 16'

GRAPHIC SCALE

KEY PLAN

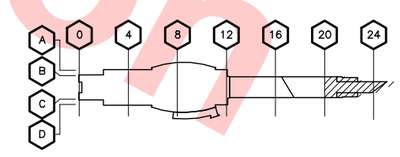

REV	DATE	BY	SUB	APP	DESCRIPTION
0	20130710				READINESS FOR CONSTRUCTION
					REPLACED C700–S–DB–S308 REV P.

DESIGNED BY J. REBER, S.E.
DRAWN BY P. DIAZ
CHECKED BY M. TARAZI
IN CHARGE M. TARAZI
DATE 20130710

REGISTERED PROFESSIONAL ENGINEER SOHAM FUAD TRAVAGLIONE # S-3185 EXP. 6/30/14 STRUCTURAL STATE OF CALIFORNIA

Skanska Shimmick Herzog
1436 California Circle
Milpitas, California 95035
A Joint Venture

MFT Consulting Engineers, Inc. Anil Verma Associates, Inc.
1773 San Pablo Ave., Suite A3 (510) 222-4106
Pinole, CA 94564 Fax (510) 222-5418

SUBMITTED

Leslewood, Andrews & Newnam, Inc. A LAN & BALY COMPANY
T-Y-LIN INTERNATIONAL

APPROVED

VTA. BART SILICON VALLEY

BART SILICON VALLEY BERRYESSA EXTENSION

LINE, TRACK, STATIONS AND SYSTEMS
DESIGN UNIT 023
MILPITAS STATION
ROOF LEVEL
FRAMING PLAN
SHEET 8 OF 9

CADD FILENAME C700–S–DB–S148.dwg
SIZE D | SCALE 1/8 = 1'–0"
CONTRACT NO. C700 | REV. 0
AREA CODE DB | SHEET NO. S148 | PAGE NO. 0180

cad–02 Jul 05, 2013 – 1:52pm P:\BART Berryessa Extension Line\S – STRUCTURAL MILPITAS\WORK_6–10–2012\C700–S–DB–S148.dwg

Not For Construction

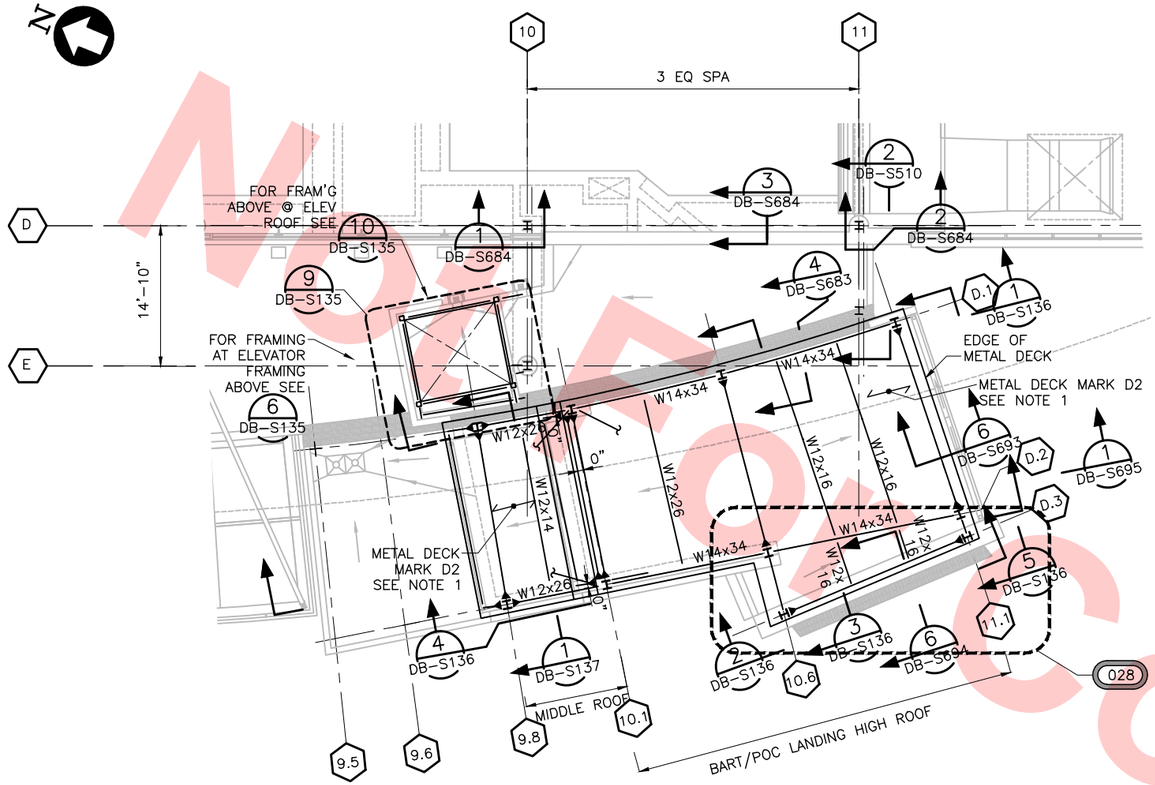

POC LANDING–HIGH ROOF AND
POC LANDING–LOWER ROOF
FRAMING PLAN

SCALE: 1/8" = 1'-0"

1 DB-S149 — DB-S140, DB-S145

Not For Construction

Santa Clara Valley Transportation Authority

____NO EXCEPTIONS TAKEN (NET)
____MAKE CORRECTIONS NOTED (MCN)
____AMEND AND RESUBMIT (A/R)

Any action shown above is subject to the terms of the contract and does not relieve the Contractor of any of its obligations under the contract, including design and detailing.

Contract No.: DB11002F

By: _____ Date: _____

8' 0' 8' 16'
GRAPHIC SCALE

KEY PLAN

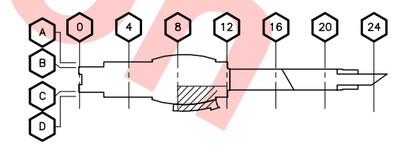

REV	DATE	BY	SUB	APP	DESCRIPTION
0	20130710				READINESS FOR CONSTRUCTION

DESIGNED BY J. REBER, S.E.
DRAWN BY P. DIAZ
CHECKED BY M. TARAZI
IN CHARGE M. TARAZI
DATE 20130710

REGISTERED PROFESSIONAL ENGINEER SOHAIL FUAD TAYEH # S-5185 EXP. 6/30/14 STRUCTURAL STATE OF CALIFORNIA

Skanska Shimmick Herzog
1436 California Circle
Milpitas, California 95035
A Joint Venture

MFT Consulting Engineers, Inc. Anil Verma Associates, Inc.
1773 San Pablo Ave., Suite A3 (510) 222-4106
Pinole, CA 94564 Fax (510) 222-4115

SUBMITTED

Lockwood, Andrews & Newnam, Inc. A LEO A DALY COMPANY
T-Y-LIN INTERNATIONAL
APPROVED

VTA BART SILICON VALLEY
BART SILICON VALLEY BERRYESSA EXTENSION

LINE, TRACK, STATIONS AND SYSTEMS
DESIGN UNIT 023
MILPITAS STATION
ROOF LEVEL
FRAMING PLAN
SHEET 9 OF 9

CADD FILENAME C700–S–DB–S149.dwg
SIZE D | SCALE 1/8" = 1'-0"
CONTRACT NO. C700 | REV. 0
AREA CODE DB | SHEET NO. S149 | PAGE NO. 0181

cad-02 Jul 05, 2013 – 1:52pm P:\BART Berryessa Extension Line\S – STRUCTURAL MILPITAS\WORK_6-10-2012\C700-S-DB-S149.dwg

NOTE:

1. VERIFY TOP OF RAIL PROFILE WITH PLAN AND PROFILE DRAWINGS PRIOR TO FINAL DESIGN MATERIAL FABRICATION AND CONSTRUCTION.
2. REFER TO DRAWINGS L5–C227 AND L5–C228 FOR INFO NOT SHOWN REGARDING TOP OF RAIL

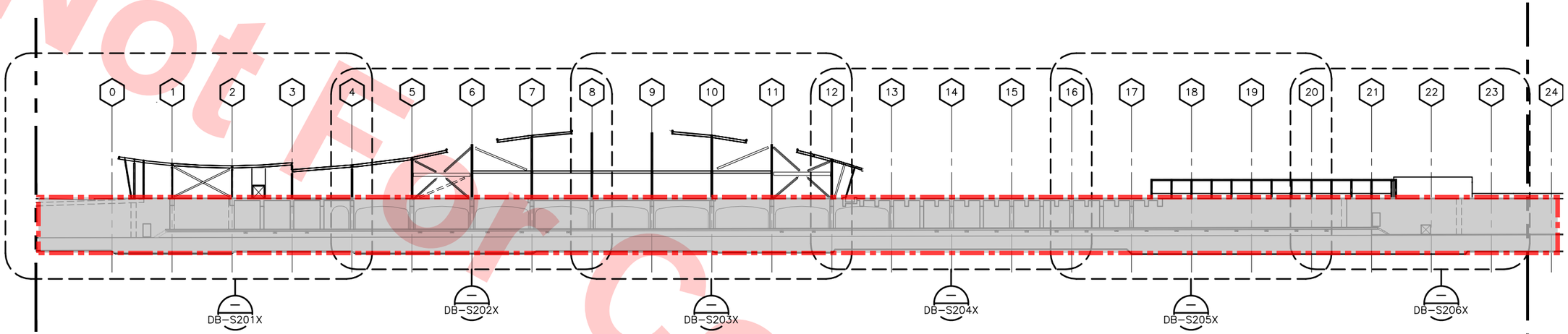

LONGITUDINAL SECTION 1 DB–S200

SCALE: 1/32"=1'–0"

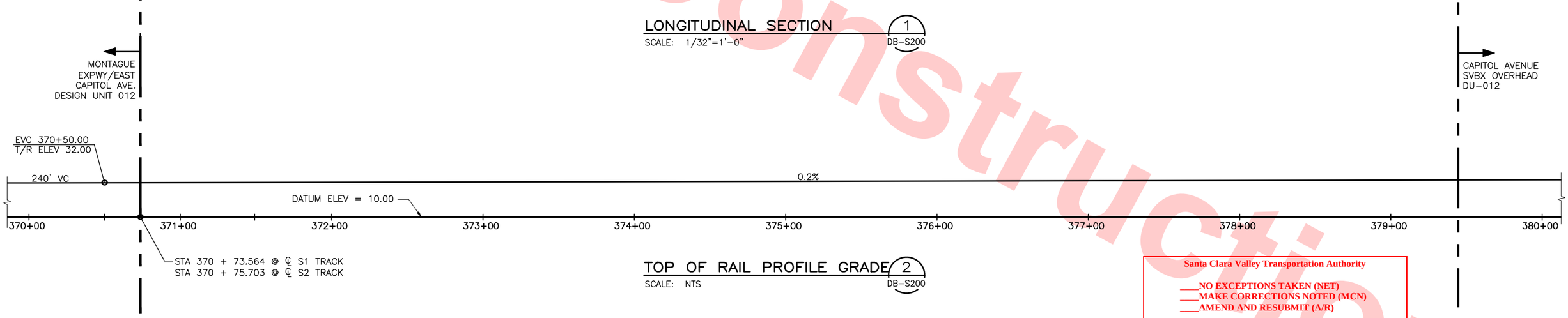

TOP OF RAIL PROFILE GRADE 2 DB–S200

SCALE: NTS

Santa Clara Valley Transportation Authority

____NO EXCEPTIONS TAKEN (NET)
____MAKE CORRECTIONS NOTED (MCN)
____AMEND AND RESUBMIT (A/R)

Any action shown above is subject to the terms of the contract and does not relieve the Contractor of any of its obligations under the contract, including design and detailing.

Contract No.: DB11002F

By: _____ Date: _____

NOTE TO REVIEWER(S):
DO NOT REVIEW AREAS DESIGNATED AS

REV	DATE	BY	SUB	APP	DESCRIPTION
0	20130710				READINESS FOR CONSTRUCTION
0	20130531				READINESS FOR CONSTRUCTION

DESIGNED BY J. REBER, S.E.
DRAWN BY P. DIAZ
CHECKED BY M. TARAZI
IN CHARGE M. TARAZI
DATE 20130710

REGISTERED PROFESSIONAL ENGINEER SOHAM FUAD TARAZI # S-3185 EXP. 6/30/14 STRUCTURAL STATE OF CALIFORNIA

Skanska Shimmick Herzog
1436 California Circle
Milpitas, California 95035
A Joint Venture

MFT Consulting Engineers, Inc. Anil Verma Associates, Inc.
1773 San Pablo Ave., Suite A3 (510) 222-4106
Pinole, CA 94564 Fax (510) 222-5418

SUBMITTED

Leslewood, Andrews & Newnam, Inc. A LAN & BALY COMPANY
T-Y-LIN INTERNATIONAL

APPROVED

VTA. BART SILICON VALLEY
BART SILICON VALLEY BERRYESSA EXTENSION

LINE, TRACK, STATIONS AND SYSTEMS
DESIGN UNIT 023
MILPITAS STATION
LONGITUDINAL SECTION
KEY PLAN

CADD FILENAME C700–S–DB–S200.dwg
SIZE D | SCALE AS NOTED
CONTRACT NO. C700 | REV. 0
AREA CODE DB | SHEET NO. S200 | PAGE NO. 0182

cad–02 Jul 05, 2013 – 1:52pm P:\BART Berryessa Extension Line\S – STRUCTURAL MILPITAS\WORK_6–10–2012\C700–S–DB–S200.dwg

Not For Construction

NOTES:

1. FOR GENERAL NOTES SEE DWG NO DB–S001X, DB–S002X, AND DB–S003X.
2. FOR NICHES LOCATION SEE ARCHITECTURAL DRAWINGS DB–A206 AND STRUCTURAL DRAWINGS DB–S613 & DB–S614 FOR STRUCTURAL DETAIL.
3. TOP OF MAT SHALL FOLLOW THE SAME SLOPE AS THE TOP OF RAIL

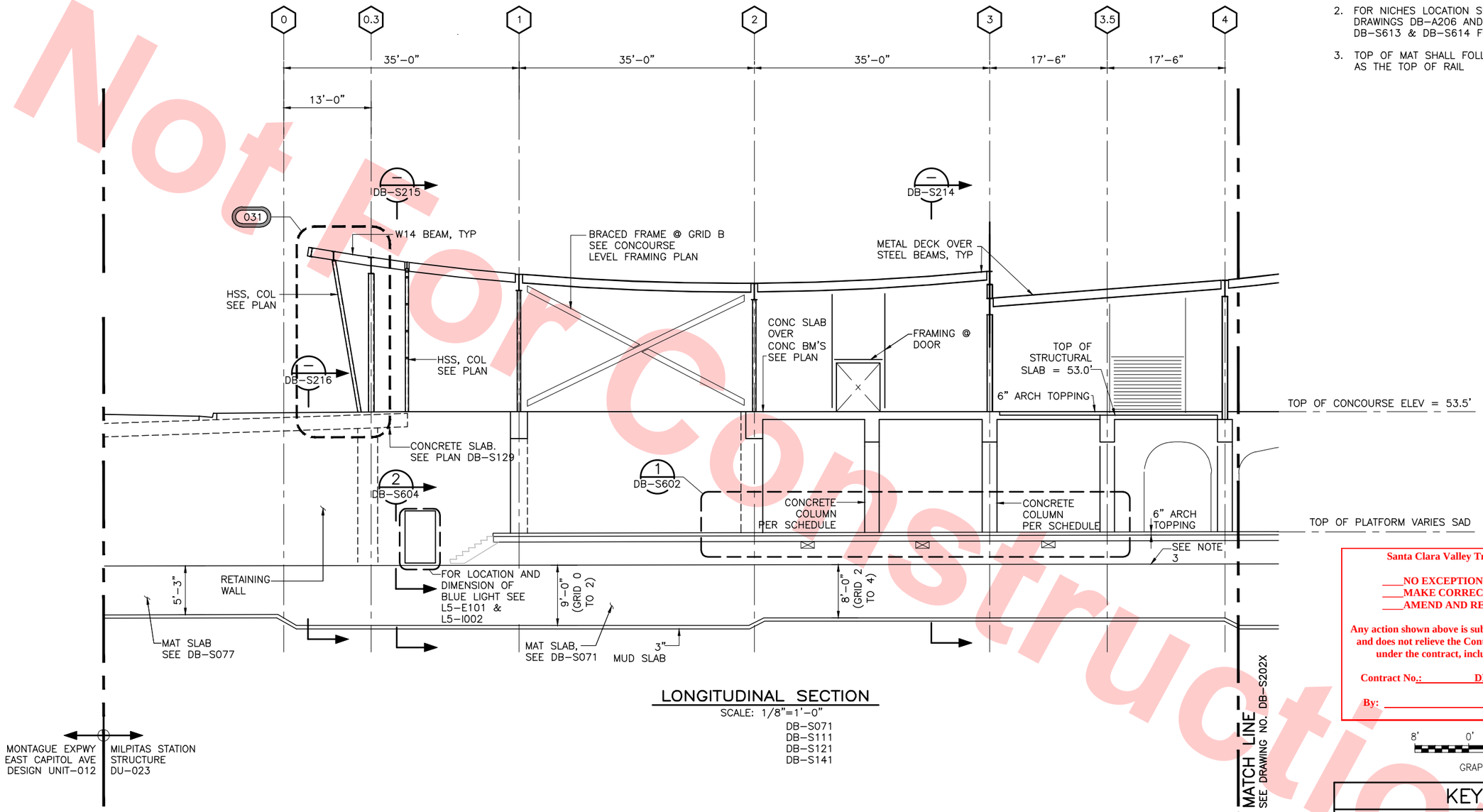

LONGITUDINAL SECTION

SCALE: 1/8"=1'–0"

DB–S071
DB–S111
DB–S121
DB–S141

Santa Clara Valley Transportation Authority

____NO EXCEPTIONS TAKEN (NET)
____MAKE CORRECTIONS NOTED (MCN)
____AMEND AND RESUBMIT (A/R)

Any action shown above is subject to the terms of the contract and does not relieve the Contractor of any of its obligations under the contract, including design and detailing.

Contract No.: DB11002F

By: _____ Date: _____

8' 0' 8' 16'

GRAPHIC SCALE

KEY PLAN

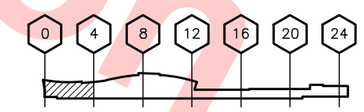

NOTE TO REVIEWER(S):
SEE SHEET DB-S200 FOR AREAS NOT TO REVIEW

REV	DATE	BY	SUB	APP	DESCRIPTION
0	20130710				READINESS FOR CONSTRUCTION
0	20130531				READINESS FOR CONSTRUCTION
					REPLACED C700–S–DB–S201 REV P.

DESIGNED BY J. REBER, S.E.
DRAWN BY P. DIAZ
CHECKED BY M. TARAZI
IN CHARGE M. TARAZI
DATE 20130710

REGISTERED PROFESSIONAL ENGINEER SOHAIL PUAD # S-3185 EXP. 6/30/14 STRUCTURAL STATE OF CALIFORNIA

Skanska Shimmick Herzog
1436 California Circle
Milpitas, California 95035
A Joint Venture

MFT CONSULTING ENGINEERS, INC. Anil Verma Associates, Inc.
1773 San Pablo Ave., Suite A3 (510) 222-4106
Pinole, CA 94564 Fax: (510) 222-4115

SUBMITTED

Lockwood, Andrews & Newnam, Inc. A LEO A DALY COMPANY
T·Y·LIN INTERNATIONAL

APPROVED

BART SILICON VALLEY
BART SILICON VALLEY BERRYESSA EXTENSION

LINE, TRACK, STATIONS AND SYSTEMS
DESIGN UNIT 023
MILPITAS STATION
LONGITUDINAL SECTION

SHEET 1 OF 6

CADD FILENAME C700–S–DB–S201X.dwg
SIZE D | SCALE 1/8" = 1'–0"
CONTRACT NO. C700 | REV. 0
AREA CODE DB | SHEET NO. S201X | PAGE NO. 0183

Not For Construction

cad–02 Jul 05, 2013 – 1:52pm P:\BART Berryessa Extension Line\S – STRUCTURAL MILPITAS\WORK_6–10–2012\C700–S–DB–S201X.dwg

NOTE:

1. FOR GENERAL NOTES SEE DWG NO DB–S001X, DB–S002X, AND DB–S003X.
2. TOP OF MAT SHALL FOLLOW THE SAME SLOPE AS THE TOP OF RAIL

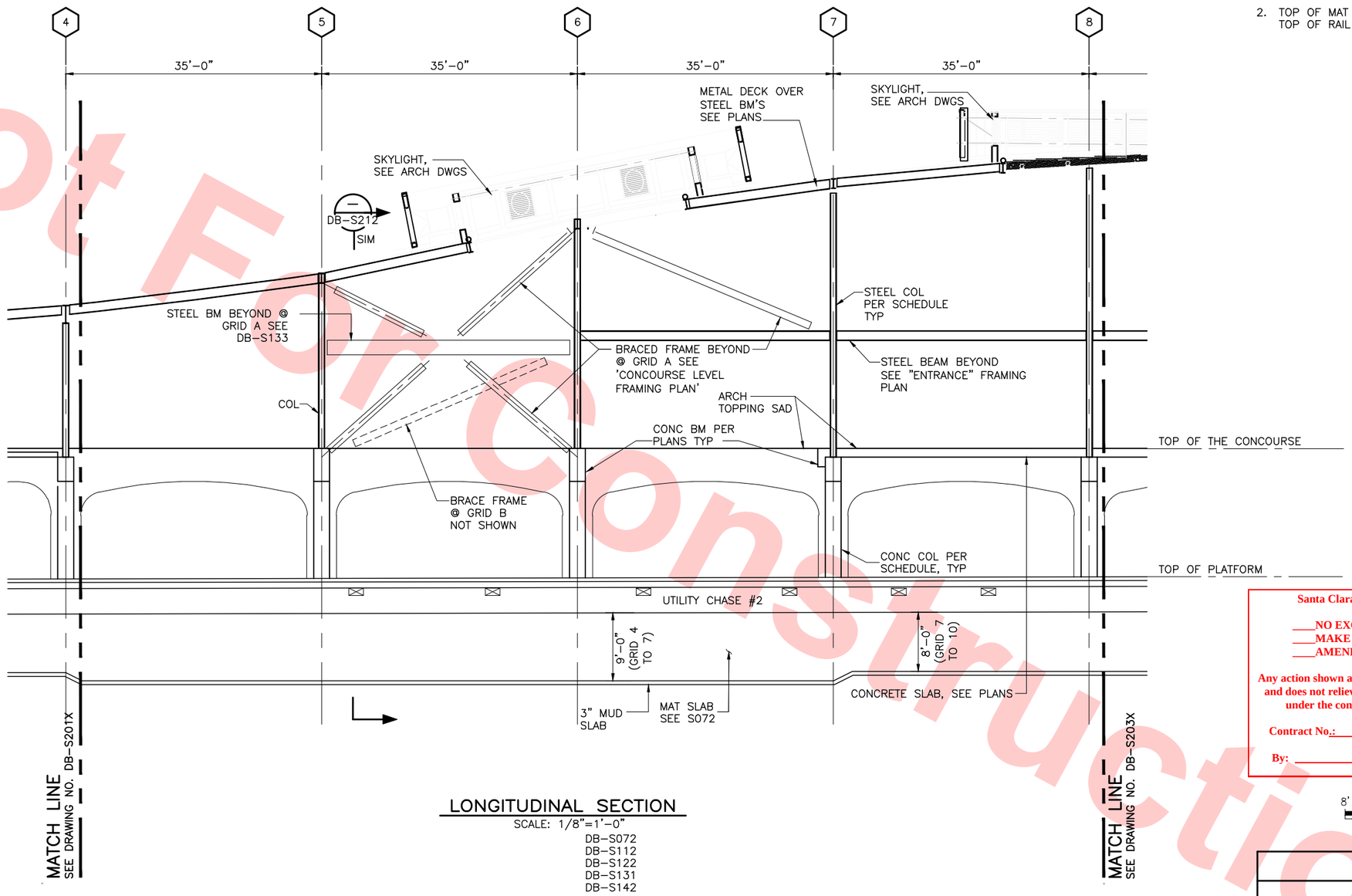

LONGITUDINAL SECTION

SCALE: 1/8"=1'–0"

DB–S072
DB–S112
DB–S122
DB–S131
DB–S142

Santa Clara Valley Transportation Authority

____NO EXCEPTIONS TAKEN (NET)
____MAKE CORRECTIONS NOTED (MCN)
____AMEND AND RESUBMIT (A/R)

Any action shown above is subject to the terms of the contract and does not relieve the Contractor of any of its obligations under the contract, including design and detailing.

Contract No.: DB11002F

By: _____ Date: _____

8' 0' 8' 16'

GRAPHIC SCALE

KEY PLAN

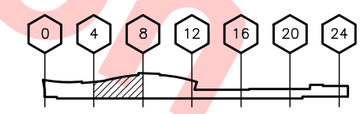

NOTE TO REVIEWER(S):
SEE SHEET DB-S200 FOR AREAS NOT TO REVIEW

Not For Construction

REV	DATE	BY	SUB	APP	DESCRIPTION
0	20130710				READINESS FOR CONSTRUCTION
0	20130531				READINESS FOR CONSTRUCTION
					REPLACED C700–S–DB–S202 REV P.

DESIGNED BY J. REBER, S.E.
DRAWN BY P. DIAZ
CHECKED BY M. TARAZI
IN CHARGE M. TARAZI
DATE 20130710

REGISTERED PROFESSIONAL ENGINEER SOHAN FUAD VERMA # S-3185 EXP. 6/30/14 STRUCTURAL STATE OF CALIFORNIA

Skanska Shimmick Herzog
1436 California Circle
Milpitas, California 95035
A Joint Venture

MFT Consulting Engineers, Inc. Anil Verma Associates, Inc.
1773 San Pablo Ave., Suite A3 (510) 222-4106
Pinole, CA 94564 Fax (510) 222-4110

SUBMITTED

Lockwood, Andrews & Newnam, Inc. A LEO A DALY COMPANY
T·Y·LIN INTERNATIONAL

APPROVED

BART SILICON VALLEY

BART SILICON VALLEY BERRYESSA EXTENSION

LINE, TRACK, STATIONS AND SYSTEMS DESIGN UNIT 023
MILPITAS STATION
LONGITUDINAL SECTION

SHEET 2 OF 6

CADD FILENAME C700–S–DB–S202X.dwg
SIZE D | SCALE 1/8" = 1'–0"
CONTRACT NO. C700 | REV. 0
AREA CODE DB | SHEET NO. S202X | PAGE NO. 0184

cad–02 Jul 05, 2013 – 1:52pm P:\BART Berryessa Extension Line\S – STRUCTURAL MILPITAS\WORK_6–10–2012\C700–S–DB–S202X.dwg

NOTE:

1. FOR GENERAL NOTES SEE DWG NO DB–S001X, DB–S002X, AND DB–S003X.

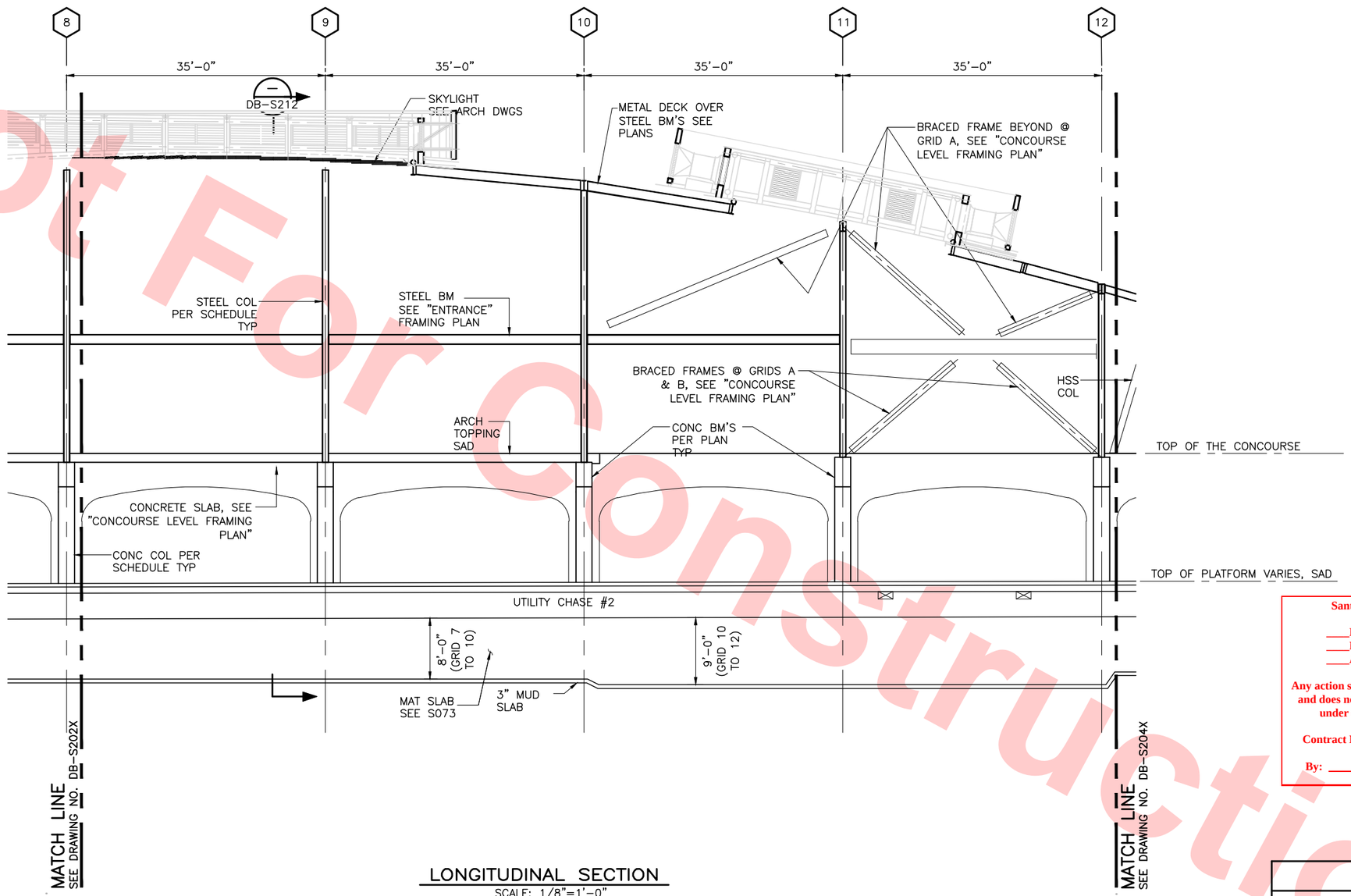

LONGITUDINAL SECTION

SCALE: 1/8"=1'–0"

DB–S073
DB–S113
DB–S124
DB–S131
DB–S144

Santa Clara Valley Transportation Authority

____NO EXCEPTIONS TAKEN (NET)
____MAKE CORRECTIONS NOTED (MCN)
____AMEND AND RESUBMIT (A/R)

Any action shown above is subject to the terms of the contract and does not relieve the Contractor of any of its obligations under the contract, including design and detailing.

Contract No.: DB11002F

By: _____ **Date:** _____

8' 0' 8' 16'

GRAPHIC SCALE

KEY PLAN

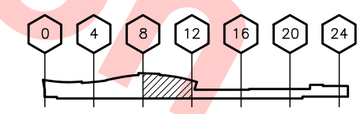

Not For Construction

NOTE TO REVIEWER(S):
SEE SHEET DB-S200 FOR AREAS NOT TO REVIEW

REV	DATE	BY	SUB	APP	DESCRIPTION
0	20130710				READINESS FOR CONSTRUCTION
0	20130531				READINESS FOR CONSTRUCTION
					REPLACED C700–S–DB–S203 REV P.

DESIGNED BY J. REBER, S.E.
DRAWN BY P. DIAZ
CHECKED BY M. TARAZI
IN CHARGE M. TARAZI
DATE 20130710

REGISTERED PROFESSIONAL ENGINEER SOHAN PUAD VERMA # S-3185 EXP. 6/30/14 STRUCTURAL STATE OF CALIFORNIA

Skanska Shimmick Herzog
1436 California Circle
Milpitas, California 95035
A Joint Venture

MFT CONSULTING ENGINEERS, INC. Anil Verma Associates, Inc.
1773 San Pablo Ave., Suite A3 (510) 222-4106
Pinole, CA 94564 Fax (510) 222-4118

SUBMITTED

Lockwood, Andrews & Newnam, Inc. A LEO A DALY COMPANY
T·Y·LIN INTERNATIONAL

APPROVED

BART SILICON VALLEY
BART SILICON VALLEY BERRYESSA EXTENSION

LINE, TRACK, STATIONS AND SYSTEMS
DESIGN UNIT 023
MILPITAS STATION
LONGITUDINAL SECTION

SHEET 3 OF 6

CADD FILENAME C700–S–DB–S203X.dwg
SIZE D | SCALE 1/8" = 1'–0"
CONTRACT NO. C700 | REV. 0
AREA CODE DB | SHEET NO. S203X | PAGE NO. 0185

cad–02 Jul 05, 2013 – 1:52pm P:\BART Berryessa Extension Line\S – STRUCTURAL MILPITAS\WORK_6–10–2012\C700–S–DB–S203X.dwg

NOTE:

1. FOR GENERAL NOTES SEE DWG NO DB-S001X, DB-S002X, AND DB-S003X.
2. COORDINATE LOCATION OF SIDEWALKS, LANDSCAPE ISLAND, CURB AND GUTTER WITH DRAWINGS: LM-C110, LM-C207 AND LM-C171 PROVIDE #4@36" EACH WAY DOWELS INTO ROADWAYS SLAB. SEE SIMILAR DETAIL 3 / DB-S771

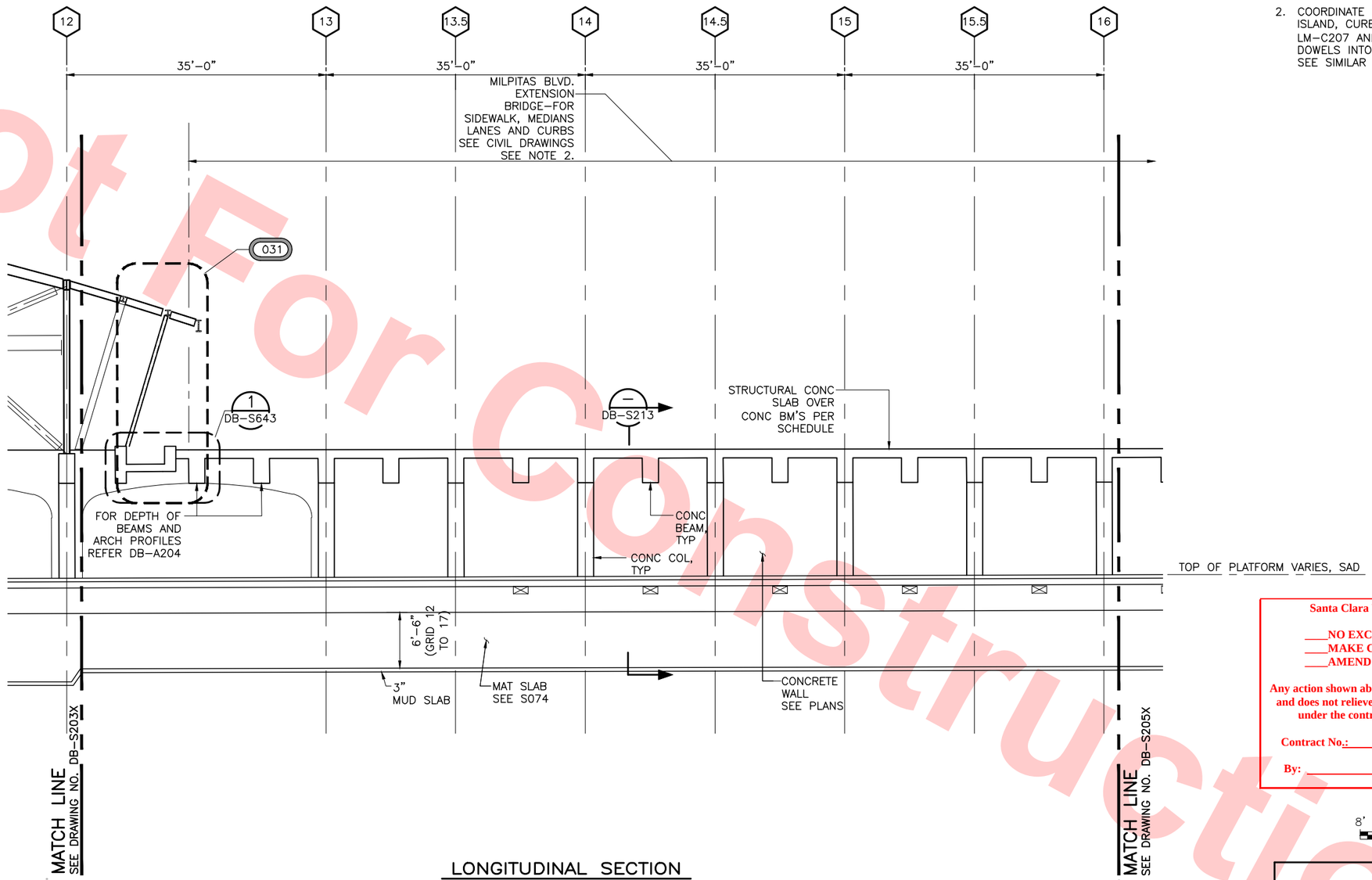

LONGITUDINAL SECTION

SCALE: 1/8"=1'-0"

DB-S074
DB-S114
DB-S126
DB-S146

Santa Clara Valley Transportation Authority

____NO EXCEPTIONS TAKEN (NET)
____MAKE CORRECTIONS NOTED (MCN)
____AMEND AND RESUBMIT (A/R)

Any action shown above is subject to the terms of the contract and does not relieve the Contractor of any of its obligations under the contract, including design and detailing.

Contract No.: DB11002F

By: _____ Date: _____

8' 0' 8' 16'

GRAPHIC SCALE

KEY PLAN

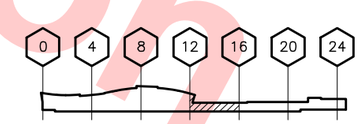

NOTE TO REVIEWER(S):
SEE SHEET DB-S200 FOR AREAS NOT TO REVIEW

REV	DATE	BY	SUB	APP	DESCRIPTION
0	20130710				READINESS FOR CONSTRUCTION
0	20130531				READINESS FOR CONSTRUCTION
					REPLACED C700-S-DB-S204 REV P.

DESIGNED BY J. REBER, S.E.
DRAWN BY P. DIAZ
CHECKED BY M. TARAZI
IN CHARGE M. TARAZI
DATE 20130710

REGISTERED PROFESSIONAL ENGINEER SOMAN FUAD RAFEEK # S-5185 EXP. 6/30/14 STRUCTURAL STATE OF CALIFORNIA

Skanska Shimmick Herzog
1436 California Circle
Milpitas, California 95035
A Joint Venture

MFT Consulting Engineers, Inc. Anil Verma Associates, Inc.
1773 San Pablo Ave., Suite A3 (510) 222-4106
Pinole, CA 94564 Fax (510) 222-5418

SUBMITTED

Lockwood, Andrews & Newnam, Inc. A LAN & MAY COMPANY
T·Y·LIN INTERNATIONAL

APPROVED

VTA. BART SILICON VALLEY

BART SILICON VALLEY BERRYESSA EXTENSION

LINE, TRACK, STATIONS AND SYSTEMS
DESIGN UNIT 023
MILPITAS STATION
LONGITUDINAL SECTION

SHEET 4 OF 6

CADD FILENAME C700-S-DB-S204X.dwg
SIZE D | SCALE 1/8" = 1'-0"
CONTRACT NO. C700 | REV. 0
AREA CODE DB | SHEET NO. S204X | PAGE NO. 0186

cad-02 Jul 05, 2013 - 1:52pm P:\BART Berryessa Extension Line\S - STRUCTURAL MILPITAS\WORK_6-10-2012\C700-S-DB-S204X.dwg

Not For Construction

NOTE:

1. FOR GENERAL NOTES SEE DWG NO DB-S001X, DB-S002X, AND DB-S003X.
2. COORDINATE LOCATION OF SIDEWALKS, LANDSCAPE ISLAND, CURB AND GUTTER WITH DRAWINGS: LM-C110, LM-C207 AND LM-C171 PROVIDE #4@36" EACH WAY DOWELS INTO ROADWAYS SLAB. SEE SIMILAR DETAIL 3 DB-S771

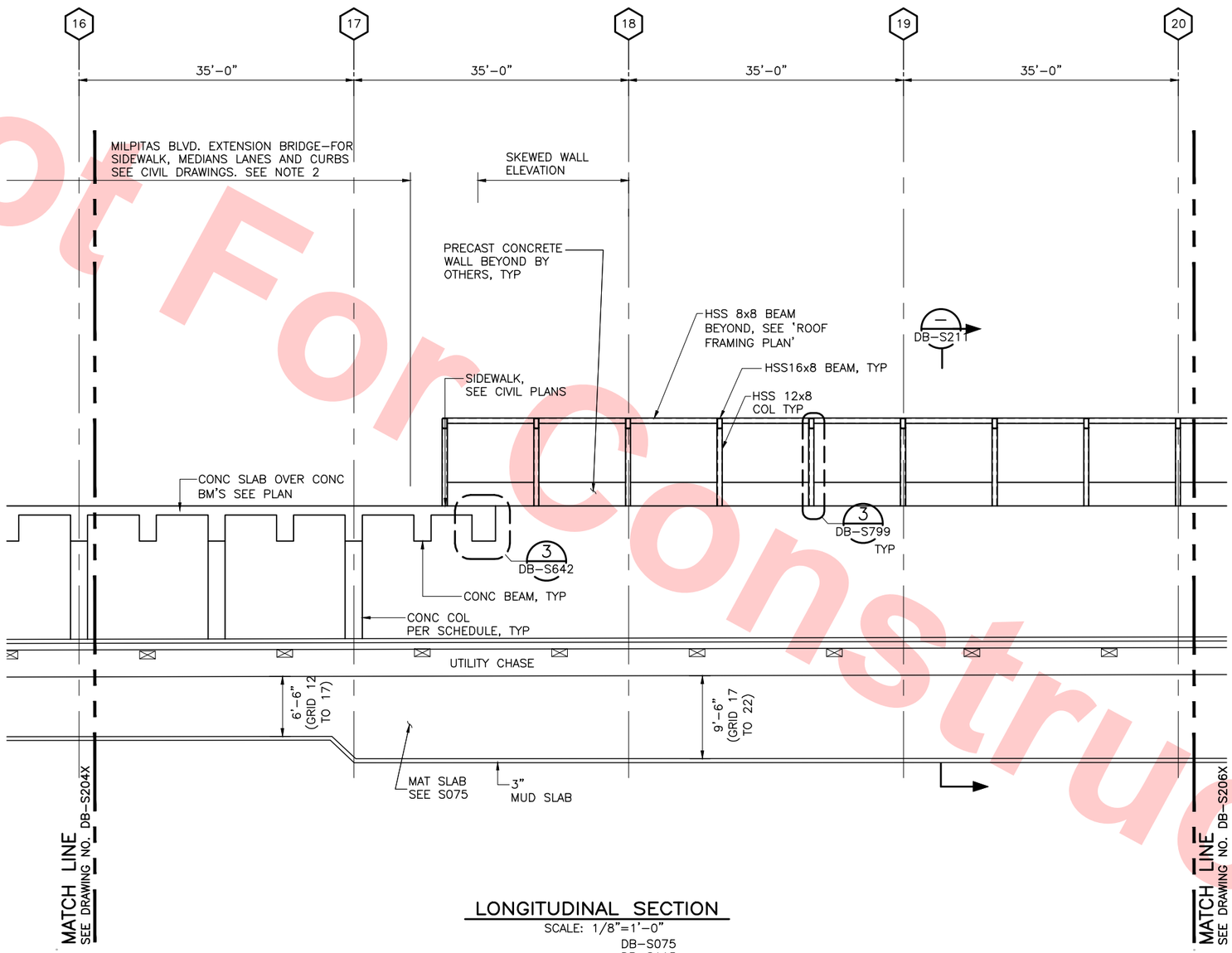

LONGITUDINAL SECTION

SCALE: 1/8"=1'-0"

DB-S075
DB-S115
DB-S127
DB-S147

Santa Clara Valley Transportation Authority

____NO EXCEPTIONS TAKEN (NET)
____MAKE CORRECTIONS NOTED (MCN)
____AMEND AND RESUBMIT (A/R)

Any action shown above is subject to the terms of the contract and does not relieve the Contractor of any of its obligations under the contract, including design and detailing.

Contract No.: DB11002F

By: _____ Date: _____

8' 0' 8' 16'

GRAPHIC SCALE

KEY PLAN

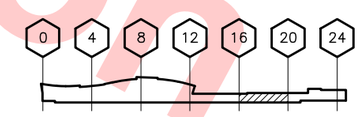

NOTE TO REVIEWER(S):
SEE SHEET DB-S200 FOR AREAS NOT TO REVIEW

Not For Construction

REV	DATE	BY	SUB	APP	DESCRIPTION
0	20130710				READINESS FOR CONSTRUCTION
0	20130531				READINESS FOR CONSTRUCTION
					REPLACED C700-S-DB-S205 REV P.

DESIGNED BY J. REBER, S.E.
DRAWN BY P. DIAZ
CHECKED BY M. TARAZI
IN CHARGE M. TARAZI
DATE 20130710

REGISTERED PROFESSIONAL ENGINEER SUMAN PUAD # S-3185 EXP. 6/30/14 STRUCTURAL STATE OF CALIFORNIA

Skanska Shimmick Herzog
1436 California Circle
Milpitas, California 95035
A Joint Venture

MFT CONSULTING ENGINEERS, INC. 1773 San Pablo Ave., Suite A3 Pinole, CA 94564 (510) 222-4106 Fax: (510) 222-4116
Anil Verma Associates, Inc.
Lockwood, Andrews & Newnam, Inc. A LAN & BALY COMPANY
T-Y-LIN INTERNATIONAL

SUBMITTED _____ APPROVED _____

VTA BART SILICON VALLEY
BART SILICON VALLEY BERRYESSA EXTENSION

LINE, TRACK, STATIONS AND SYSTEMS
DESIGN UNIT 023
MILPITAS STATION
LONGITUDINAL SECTION

SHEET 5 OF 6

CADD FILENAME C700-S-DB-S205X.dwg
SIZE D | SCALE 1/8" = 1'-0"
CONTRACT NO. C700 | REV. 0
AREA CODE DB | SHEET NO. S205X | PAGE NO. 0187

cad-02 Jul 05, 2013 - 1:52pm P:\BART Berryessa Extension Line\S - STRUCTURAL MILPITAS\WORK_6-10-2012\C700-S-DB-S205X.dwg

NOTE:

1. FOR GENERAL NOTES SEE DWG NO DB–S001X, DB–S002X, AND DB–S003X.
2. FOR NICHES LOCATION SEE ARCHITECTURAL DRAWINGS DB–A206, L5–I002, L5–E101 AND L5–E102 STRUCTURAL DRAWINGS DB–S613 & DB–S614 FOR STRUCTURAL DETAIL

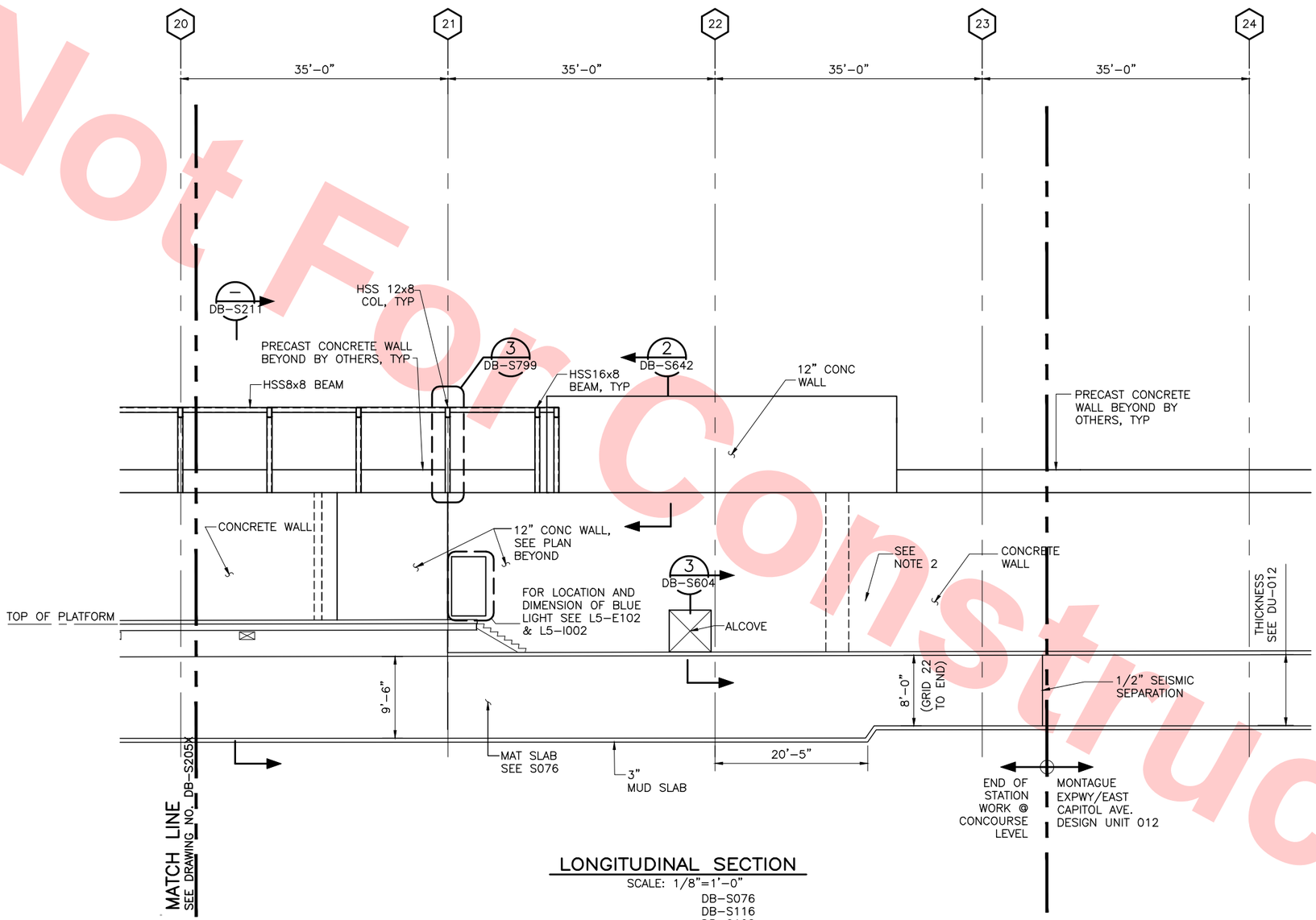

LONGITUDINAL SECTION

SCALE: 1/8"=1'–0"

DB–S076
DB–S116
DB–S128
DB–S148

Santa Clara Valley Transportation Authority

____NO EXCEPTIONS TAKEN (NET)
____MAKE CORRECTIONS NOTED (MCN)
____AMEND AND RESUBMIT (A/R)

Any action shown above is subject to the terms of the contract and does not relieve the Contractor of any of its obligations under the contract, including design and detailing.

Contract No.: DB11002F

By: _____ **Date:** _____

KEY PLAN

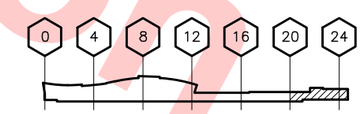

NOTE TO REVIEWER(S):
SEE SHEET DB-S200 FOR AREAS NOT TO REVIEW

Not For Construction

REV	DATE	BY	SUB	APP	DESCRIPTION
0	20130710				READINESS FOR CONSTRUCTION
0	20130531				READINESS FOR CONSTRUCTION
					REPLACED C700–S–DB–S206 REV P.

DESIGNED BY J. REBER, S.E.
DRAWN BY P. DIAZ
CHECKED BY M. TARAZI
IN CHARGE M. TARAZI
DATE 20130710

PROFESSIONAL ENGINEER SOHAM FUAD TARAZI # S-3185 EXP. 6/30/14 STRUCTURAL STATE OF CALIFORNIA

Skanska Shimmick Herzog
1436 California Circle
Milpitas, California 95035
A Joint Venture

MFT Consulting Engineers, Inc. 1773 San Pablo Ave., Suite A3 Pinole, CA 94564 (510) 222-4106 Fax (510) 222-4410
Anil Verma Associates, Inc.
Lockwood, Andrews & Newnam, Inc. A LEO A DALY COMPANY
T-Y-LIN INTERNATIONAL

SUBMITTED
APPROVED

BART SILICON VALLEY
BART SILICON VALLEY BERRYESSA EXTENSION

LINE, TRACK, STATIONS AND SYSTEMS
DESIGN UNIT 023
MILPITAS STATION
LONGITUDINAL SECTION

SHEET 6 OF 6

CADD FILENAME C700–S–DB–S206X.dwg
SIZE D | SCALE 1/8" = 1'–0"
CONTRACT NO. C700 | REV. 0
AREA CODE DB | SHEET NO. S206X | PAGE NO. 0188

cad–02 Jul 05, 2013 – 1:53pm P:\BART Berryessa Extension Line\S – STRUCTURAL MILPITAS\WORK_6–10–2012\C700–S–DB–S206X.dwg

NOTE:

1. FOR GENERAL NOTES SEE DWG NO DB–S001X, DB–S002X, AND DB–S003X.

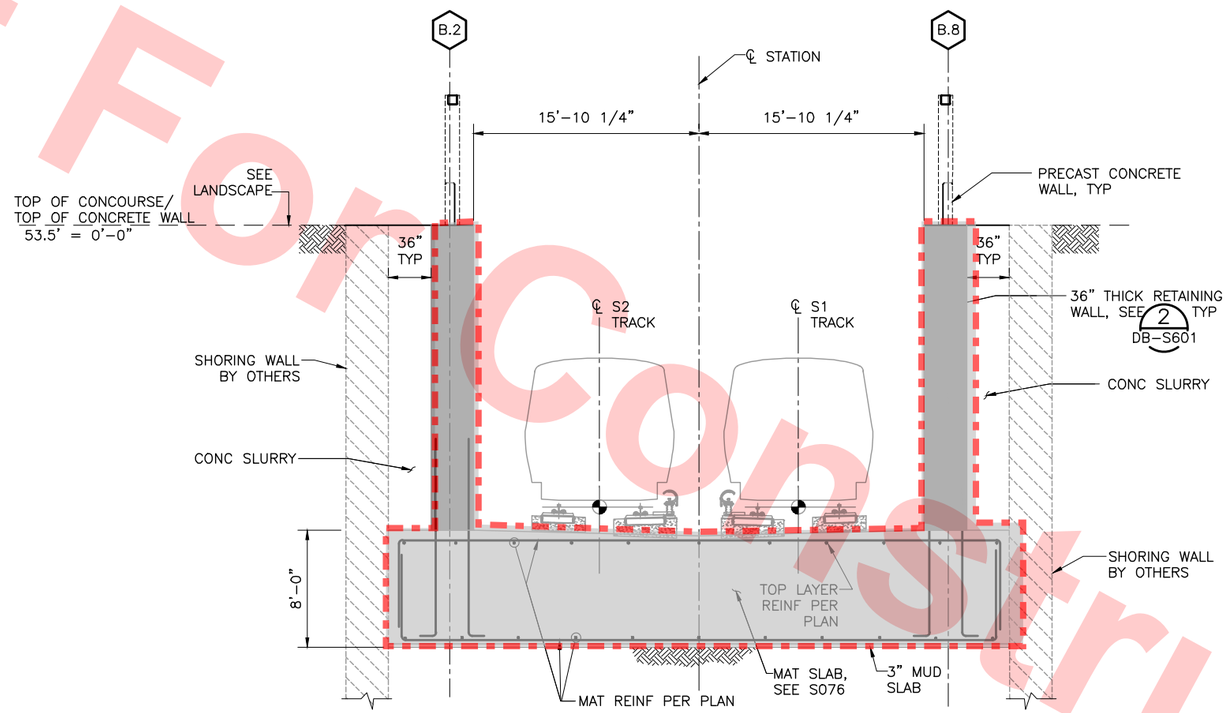

TRANSVERSE SECTION

SCALE: 3/16"=1'–0"

DB–S076
DB–S116
DB–S128
DB–S148
DB–S205X
DB–S206X

Santa Clara Valley Transportation Authority

____NO EXCEPTIONS TAKEN (NET)
____MAKE CORRECTIONS NOTED (MCN)
____AMEND AND RESUBMIT (A/R)

Any action shown above is subject to the terms of the contract and does not relieve the Contractor of any of its obligations under the contract, including design and detailing.

Contract No.: DB11002F

By: _____ Date: _____

NOTE TO REVIEWER(S):
DO NOT REVIEW AREAS DESIGNATED AS

REV	DATE	BY	SUB	APP	DESCRIPTION
0	20130710				READINESS FOR CONSTRUCTION
0	20130531				READINESS FOR CONSTRUCTION

DESIGNED BY J. REBER, S.E.
DRAWN BY P. DIAZ
CHECKED BY M. TARAZI
IN CHARGE M. TARAZI
DATE 20130710

PROFESSIONAL ENGINEER # S-3185 EXP. 6/30/14 STRUCTURAL STATE OF CALIFORNIA

Skanska Shimmick Herzog
1436 California Circle
Milpitas, California 95035
A Joint Venture

MFT Consulting Engineers, Inc. Anil Verma Associates, Inc.
1773 San Pablo Ave., Suite A3 (510) 222-4106
Pinole, CA 94564 Fax (510) 222-4410

SUBMITTED

Lockwood, Andrews & Newnam, Inc. A LEO A DALY COMPANY
T·Y·LIN INTERNATIONAL

APPROVED

VTA BART SILICON VALLEY
BART SILICON VALLEY BERRYESSA EXTENSION

LINE, TRACK, STATIONS AND SYSTEMS
DESIGN UNIT 023
MILPITAS STATION
TRANSVERSE SECTION

SHEET 1 OF 7

CADD FILENAME C700–S–DB–S210.dwg
SIZE D | SCALE 3/16" = 1'–0"
CONTRACT NO. C700 | REV. 0
AREA CODE DB | SHEET NO. S210 | PAGE NO. 0189

cad–02 Jul 05, 2013 – 1:53pm P:\BART Berryessa Extension Line\S – STRUCTURAL MILPITAS\WORK_6–10–2012\C700–S–DB–S210.dwg

Not For Construction

NOTE:

1. FOR GENERAL NOTES SEE DWG NO DB–S001X, DB–S002X, AND DB–S003X.

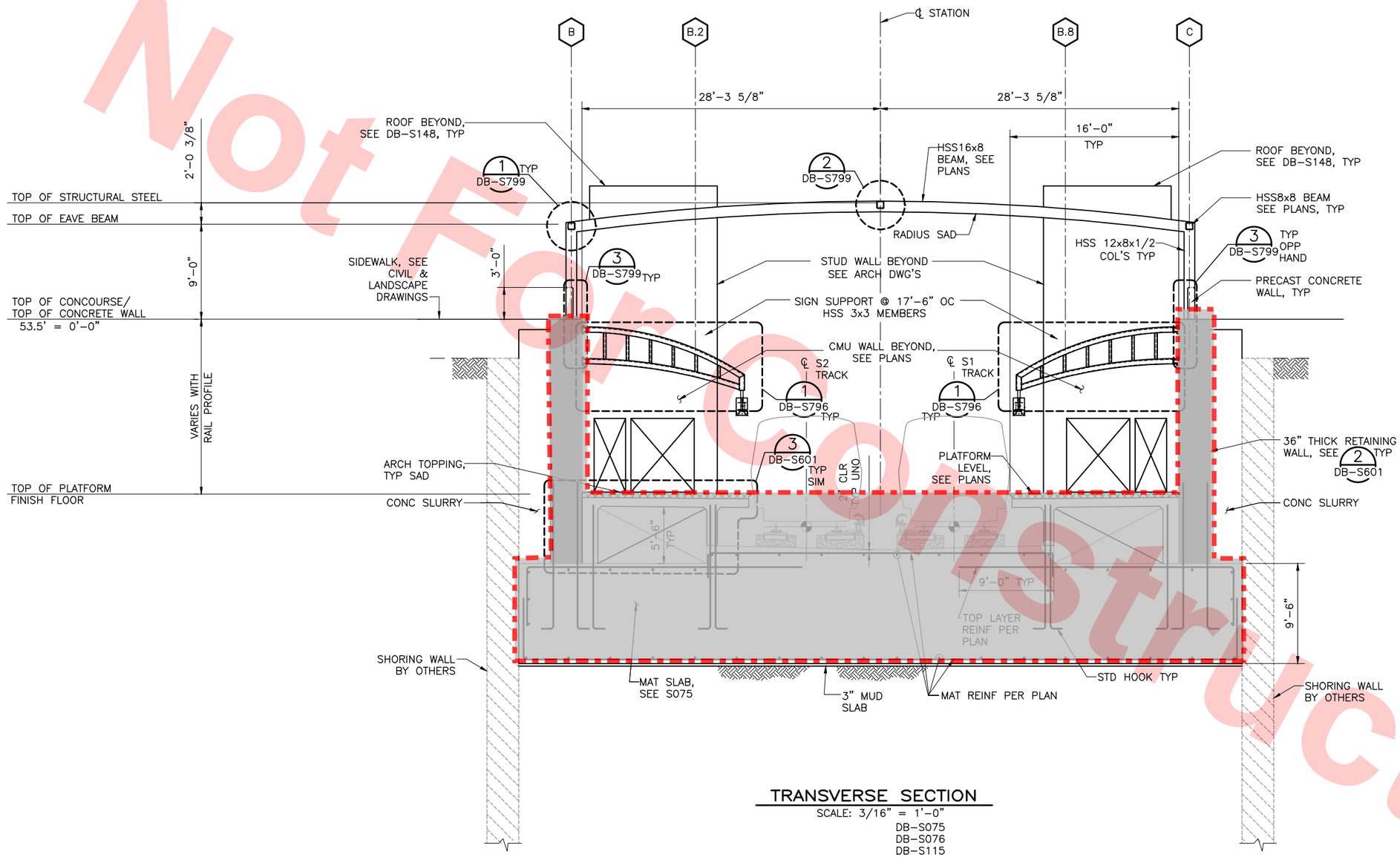

TRANSVERSE SECTION

SCALE: 3/16" = 1'–0"

DB–S075
DB–S076
DB–S115
DB–S116
DB–S127
DB–S128
DB–S147
DB–S148
DB–S205X
DB–S206X

Santa Clara Valley Transportation Authority

____NO EXCEPTIONS TAKEN (NET)
____MAKE CORRECTIONS NOTED (MCN)
____AMEND AND RESUBMIT (A/R)

Any action shown above is subject to the terms of the contract and does not relieve the Contractor of any of its obligations under the contract, including design and detailing.

Contract No.: DB11002F

By: _____ Date: _____

NOTE TO REVIEWER(S):
DO NOT REVIEW AREAS DESIGNATED AS

Not For Construction

REV	DATE	BY	SUB	APP	DESCRIPTION
0	20130710				READINESS FOR CONSTRUCTION
0	20130531				READINESS FOR CONSTRUCTION

DESIGNED BY J. REBER, S.E.
DRAWN BY P. DIAZ
CHECKED BY M. TARAZI
IN CHARGE M. TARAZI
DATE 20130710

REGISTERED PROFESSIONAL ENGINEER SIGNAL FUAD RAMIREZ # S-5185 EXP. 6/30/14 STRUCTURAL STATE OF CALIFORNIA

Skanska Shimmick Herzog
1436 California Circle
Milpitas, California 95035
A Joint Venture

MFT Consulting Engineers, Inc. Anil Verma Associates, Inc.
1773 San Pablo Ave., Suite A3 (510) 222-4106
Pinole, CA 94564 Fax (510) 222-5418

SUBMITTED

Lockwood, Andrews & Newnam, Inc. A LINA NAN COMPANY
T·Y·LIN INTERNATIONAL

APPROVED

VTA. BART SILICON VALLEY
BART SILICON VALLEY BERRYESSA EXTENSION

LINE, TRACK, STATIONS AND SYSTEMS
DESIGN UNIT 023
MILPITAS STATION
TRANSVERSE SECTION

SHEET 2 OF 7

CADD FILENAME C700–S–DB–S211.dwg
SIZE D | SCALE 3/16" = 1'–0"
CONTRACT NO. C700 | REV. 0
AREA CODE DB | SHEET NO. S211 | PAGE NO. 0190

cad–02 Jul 05, 2013 – 1:53pm P:\BART Berryessa Extension Line\S – STRUCTURAL MILPITAS\WORK_6–10–2012\C700–S–DB–S211.dwg

Santa Clara Valley Transportation Authority

____NO EXCEPTIONS TAKEN (NET)
____MAKE CORRECTIONS NOTED (MCN)
____AMEND AND RESUBMIT (A/R)

Any action shown above is subject to the terms of the contract and does not relieve the Contractor of any of its obligations under the contract, including design and detailing.

Contract No.: DB11002F

By: _____ Date: _____

NOTE:

1. FOR GENERAL NOTES SEE DWG NO DB–S001X, DB–S002X, AND DB–S003X.

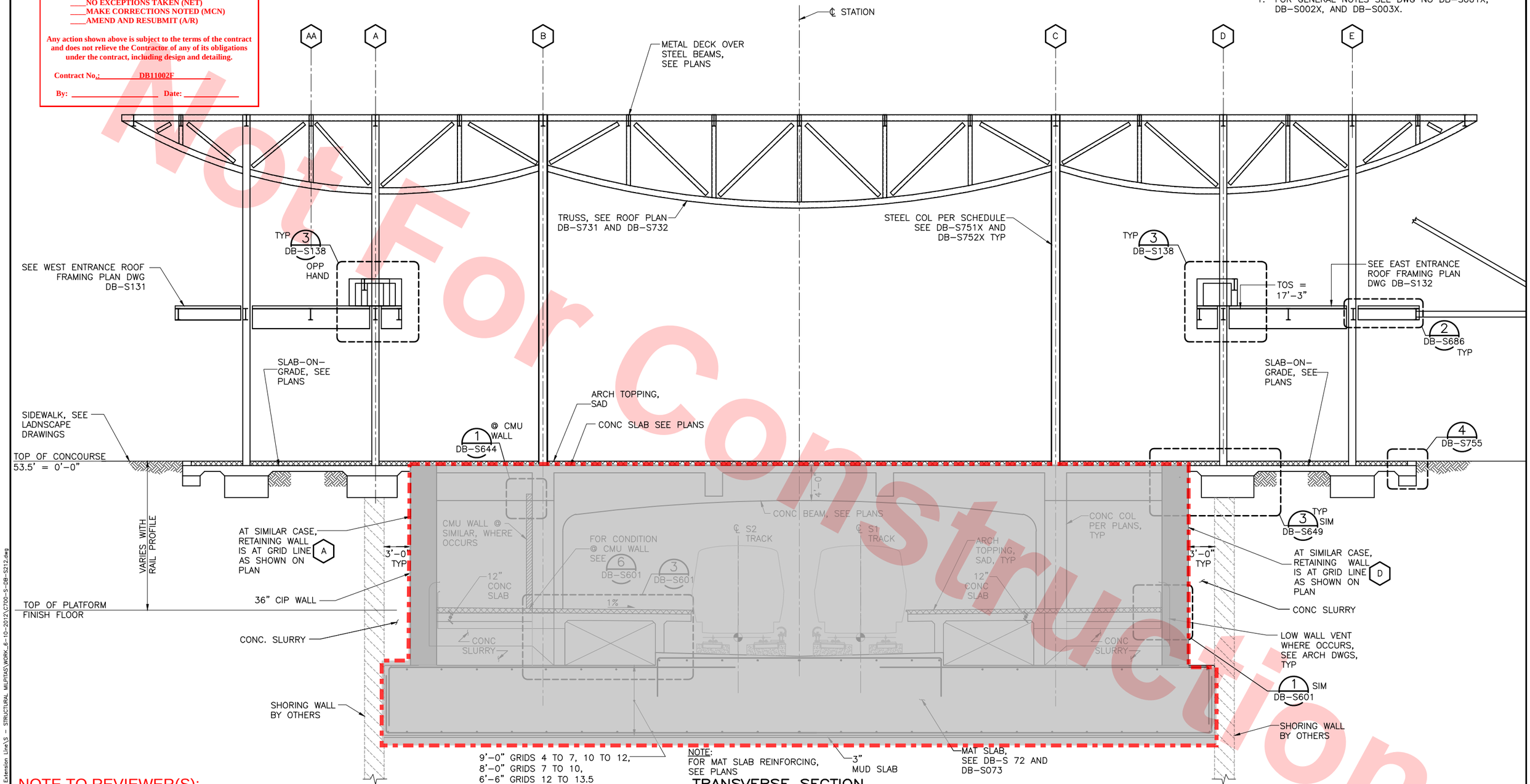

TRANSVERSE SECTION

SCALE: 3/16"=1'–0"

DB–S072 DB–S131
DB–S073 DB–S132
DB–S113 DB–S144
DB–S124 DB–S145
DB–S125 DB–S203X

8' 0' 8' 16'
GRAPHIC SCALE

NOTE TO REVIEWER(S):
DO NOT REVIEW AREAS DESIGNATED AS

Not For Construction

REV	DATE	BY	SUB	APP	DESCRIPTION
0	20130710				READINESS FOR CONSTRUCTION
0	20130531				READINESS FOR CONSTRUCTION

DESIGNED BY J. REBER, S.E.
DRAWN BY P. DIAZ
CHECKED BY M. TARAZI
IN CHARGE M. TARAZI
DATE 20130710

REGISTERED PROFESSIONAL ENGINEER SOHAIL FUAD TAZI S-3185 EXP.6/30/14 STRUCTURAL STATE OF CALIFORNIA

Skanska Shimmick Herzog
1436 California Circle
Milpitas, California 95035
A Joint Venture

MFT Consulting Engineers, Inc. 1773 San Pablo Ave., Suite A3 Pinole, CA 94564 (510) 222-4106 Fax (510) 222-5613
Anil Verma Associates, Inc.
SUBMITTED

Lockwood, Andrews & Newnam, Inc. A LAN & RALT COMPANY
T-Y-LIN INTERNATIONAL
APPROVED

VTA. BART SILICON VALLEY
BART SILICON VALLEY BERRYESSA EXTENSION

LINE, TRACK, STATIONS AND SYSTEMS DESIGN UNIT 023
MILPITAS STATION
TRANSVERSE SECTION

SHEET 3 OF 7

CADD FILENAME C700–S–DB–S212.dwg
SIZE D | SCALE 3/16" = 1'–0"
CONTRACT NO. C700 | REV. 0
AREA CODE DB | SHEET NO. S212 | PAGE NO. 0191

cad–02 Jul 05, 2013 – 1:53pm P:\BART Berryessa Extension Line\S – STRUCTURAL, MILPITAS\WORK_6–10–2012\C700–S–DB–S212.dwg

NOTE:

1. FOR GENERAL NOTES SEE DWG NO DB–S001X, DB–S002X, AND DB–S003X.

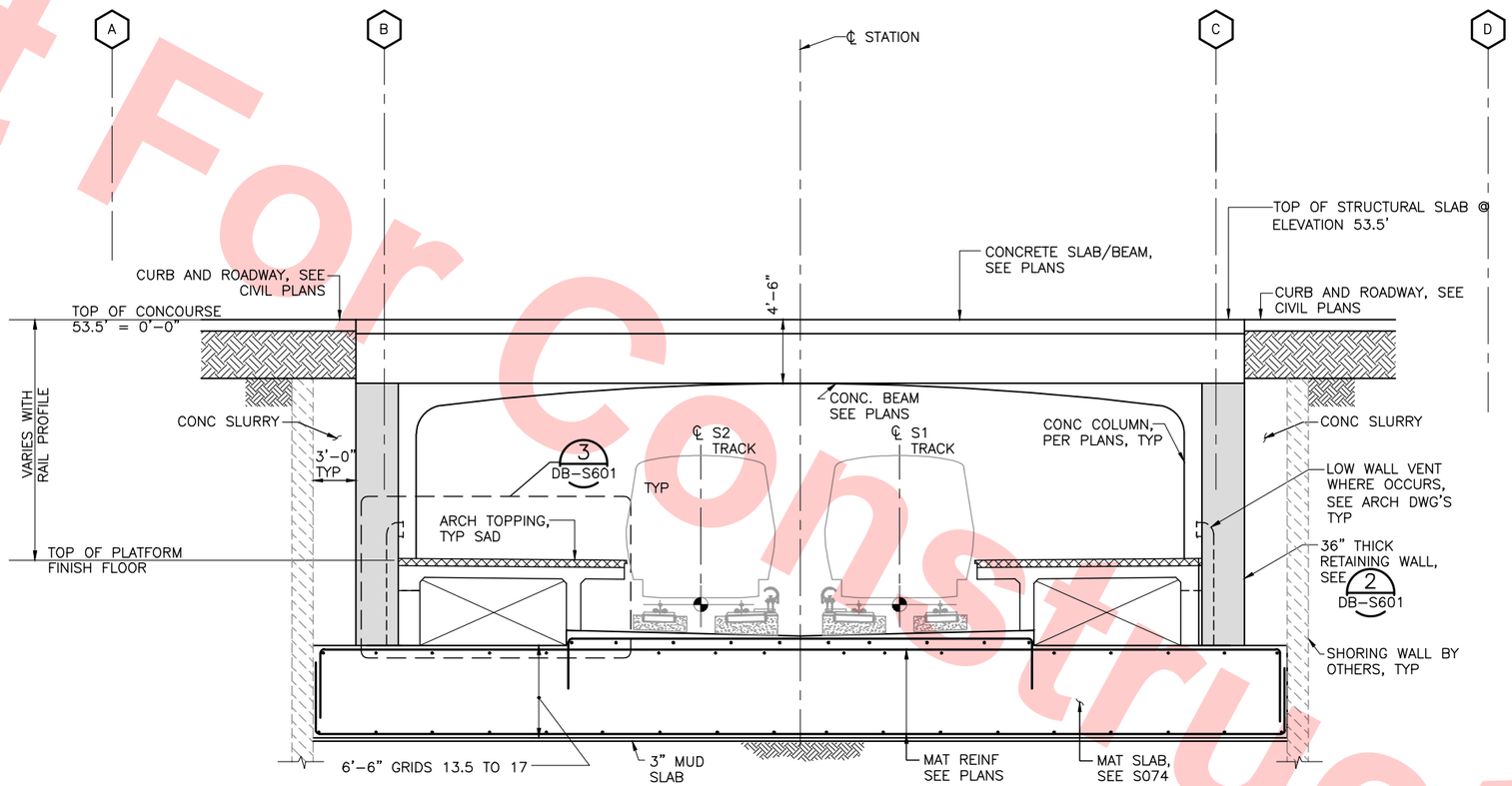

TRANSVERSE SECTION

SCALE: 3/16"=1'–0"

DB–S074
DB–S114
DB–S126

Santa Clara Valley Transportation Authority

____NO EXCEPTIONS TAKEN (NET)
____MAKE CORRECTIONS NOTED (MCN)
____AMEND AND RESUBMIT (A/R)

Any action shown above is subject to the terms of the contract and does not relieve the Contractor of any of its obligations under the contract, including design and detailing.

Contract No.: DB11002F

By: _____ Date: _____

Not For Construction

FOR REFERENCE ONLY AND NOT FOR REVIEW.
THIS DRAWING WAS SUBMITTED UNDER
DU-23-WP08 TRENCH PACKAGE

8' 0' 8' 16'
GRAPHIC SCALE

REV	DATE	BY	SUB	APP	DESCRIPTION
0	20130710				READINESS FOR CONSTRUCTION
0	20130531				READINESS FOR CONSTRUCTION

DESIGNED BY J. REBER, S.E.
DRAWN BY P. DIAZ
CHECKED BY M. TARAZI
IN CHARGE M. TARAZI
DATE 20130710

REGISTERED PROFESSIONAL ENGINEER SOHAIL FUAD TAYA # S-3185 EXP. 9/30/14 STRUCTURAL STATE OF CALIFORNIA

Skanska Shimmick Herzog
1436 California Circle
Milpitas, California 95035
A Joint Venture

MFT Consulting Engineers, Inc. Anil Verma Associates, Inc.
1773 San Pablo Ave., Suite A3 (510) 222-4106
Pinole, CA 94564 Fax (510) 222-5118

SUBMITTED

Lockwood, Andrews & Newnam, Inc. A LAN & NAV COMPANY
T-Y-LIN INTERNATIONAL

APPROVED

VTA. BART SILICON VALLEY
BART SILICON VALLEY BERRYESSA EXTENSION

LINE, TRACK, STATIONS AND SYSTEMS
DESIGN UNIT 023
MILPITAS STATION
TRANSVERSE SECTION

SHEET 4 OF 7

CADD FILENAME C700–S–DB–S213.dwg
SIZE D | SCALE 3/16" = 1'–0"
CONTRACT NO. C700 | REV. 0
AREA CODE DB | SHEET NO. S213 | PAGE NO. 0192

cad–02 Jul 05, 2013 – 1:53pm P:\BART Berryessa Extension Line\S – STRUCTURAL MILPITAS\WORK_6–10–2012\C700–S–DB–S213.dwg

NOTE:

1. FOR GENERAL NOTES SEE DWG NO DB–S001X, DB–S002X, AND DB–S003X.

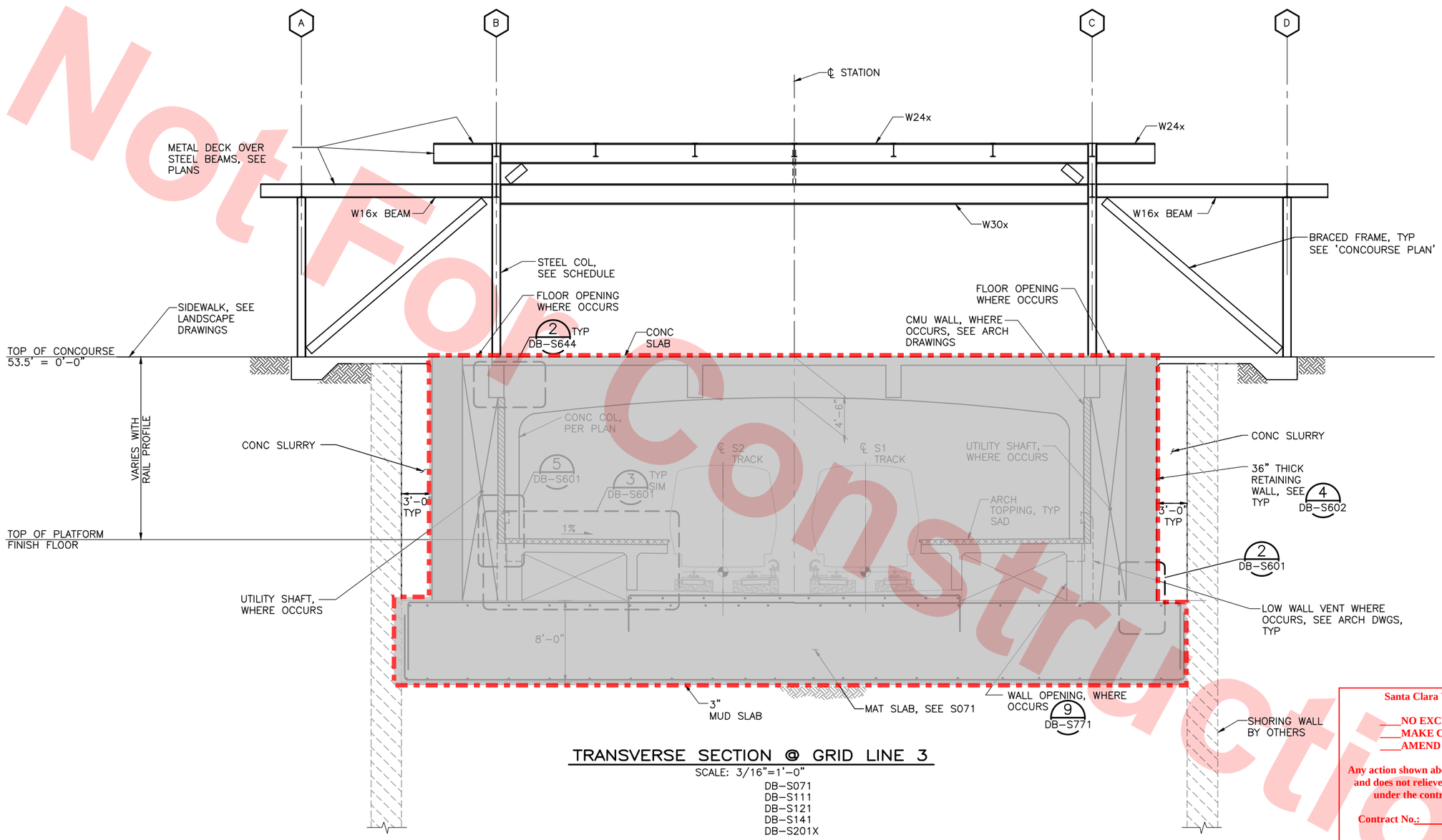

TRANSVERSE SECTION @ GRID LINE 3

SCALE: 3/16"=1'–0"

DB–S071
DB–S111
DB–S121
DB–S141
DB–S201X

Santa Clara Valley Transportation Authority

____NO EXCEPTIONS TAKEN (NET)
____MAKE CORRECTIONS NOTED (MCN)
____AMEND AND RESUBMIT (A/R)

Any action shown above is subject to the terms of the contract and does not relieve the Contractor of any of its obligations under the contract, including design and detailing.

Contract No.: DB11002F

By: _____ **Date:** _____

NOTE TO REVIEWER(S):
DO NOT REVIEW AREAS DESIGNATED AS

8' 0' 8' 16'
GRAPHIC SCALE

Not For Construction

REV	DATE	BY	SUB	APP	DESCRIPTION
0	20130710				READINESS FOR CONSTRUCTION
0	20130531				READINESS FOR CONSTRUCTION

DESIGNED BY J. REBER, S.E.
DRAWN BY P. DIAZ
CHECKED BY M. TARAZI
IN CHARGE M. TARAZI
DATE 20130710

REGISTERED PROFESSIONAL ENGINEER SOHAM FUAD PATEL # S-3185 EXP. 6/30/14 STRUCTURAL STATE OF CALIFORNIA

Skanska Shimmick Herzog
1436 California Circle
Milpitas, California 95035
A Joint Venture

MFT Consulting Engineers, Inc. 1773 San Pablo Ave., Suite A3 Pinole, CA 94564 (510) 222-4106 Fax (510) 222-4118
Anil Verma Associates, Inc.
Lockwood, Andrews & Newnam, Inc. A LEO A DALY COMPANY
T·Y·LIN INTERNATIONAL

SUBMITTED
APPROVED

VTA BART SILICON VALLEY
BART SILICON VALLEY BERRYESSA EXTENSION

LINE, TRACK, STATIONS AND SYSTEMS DESIGN UNIT 023
MILPITAS STATION
TRANSVERSE SECTION

SHEET 5 OF 7

CADD FILENAME C700–S–DB–S214.dwg
SIZE D | SCALE 3/16" = 1'–0"
CONTRACT NO. C700 | REV. 0
AREA CODE DB | SHEET NO. S214 | PAGE NO. 0193

cad-02 Jul 05, 2013 – 1:53pm P:\BART Berryessa Extension Line\S – STRUCTURAL MILPITAS\WORK_6-10-2012\C700-S-DB-S214.dwg

NOTE:

1. FOR GENERAL NOTES SEE DWG NO DB–S001X, DB–S002X, AND DB–S003X.

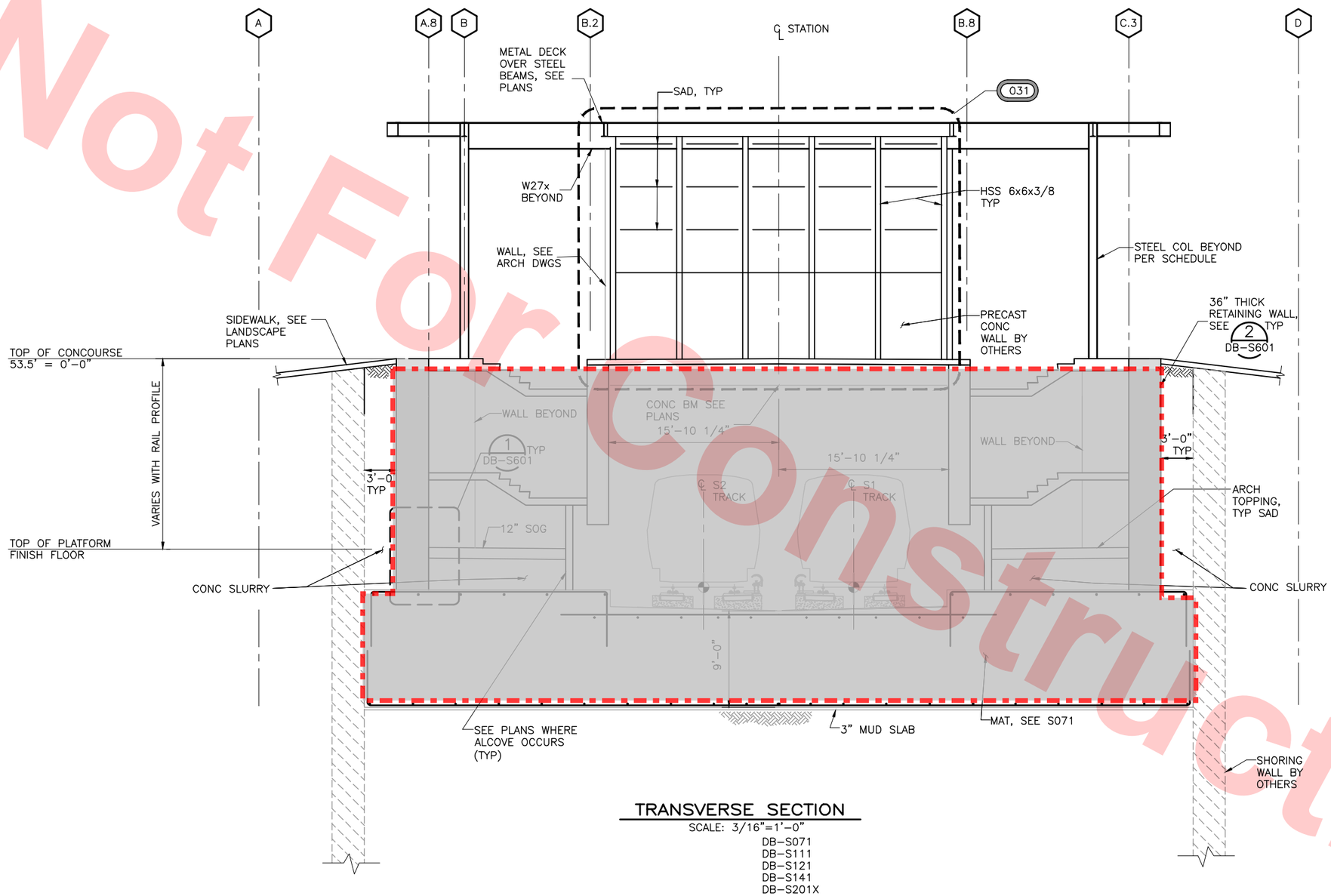

TRANSVERSE SECTION

SCALE: 3/16"=1'–0"

DB–S071
DB–S111
DB–S121
DB–S141
DB–S201X

Santa Clara Valley Transportation Authority

____NO EXCEPTIONS TAKEN (NET)
____MAKE CORRECTIONS NOTED (MCN)
____AMEND AND RESUBMIT (A/R)

Any action shown above is subject to the terms of the contract and does not relieve the Contractor of any of its obligations under the contract, including design and detailing.

Contract No.: DB11002F

By: _____ Date: _____

NOTE TO REVIEWER(S):
DO NOT REVIEW AREAS DESIGNATED AS

8' 0' 8' 16'
GRAPHIC SCALE

Not For Construction

REV	DATE	BY	SUB	APP	DESCRIPTION
0	20130710				READINESS FOR CONSTRUCTION
0	20130531				READINESS FOR CONSTRUCTION

DESIGNED BY J. REBER, S.E.
DRAWN BY P. DIAZ
CHECKED BY M. TARAZI
IN CHARGE M. TARAZI
DATE 20130710

REGISTERED PROFESSIONAL ENGINEER SOHAIL FUAD TAZI # S-3185 EXP. 6/30/14 STRUCTURAL STATE OF CALIFORNIA

Skanska Shimmick Herzog
1436 California Circle
Milpitas, California 95035
A Joint Venture

MFT Consulting Engineers, Inc. 1773 San Pablo Ave., Suite A3 Pinole, CA 94564 (510) 222-4106 Fax (510) 222-4618
Anil Verma Associates, Inc.
Lockwood, Andrews & Newnam, Inc. A LINA A RALY COMPANY
T-Y-LIN INTERNATIONAL

SUBMITTED
APPROVED

VTA. BART SILICON VALLEY
BART SILICON VALLEY BERRYESSA EXTENSION

LINE, TRACK, STATIONS AND SYSTEMS DESIGN UNIT 023
MILPITAS STATION
TRANSVERSE SECTION

SHEET 6 OF 7

CADD FILENAME C700–S–DB–S215.dwg
SIZE D | SCALE 3/16" = 1'–0"
CONTRACT NO. C700 | REV. 0
AREA CODE DB | SHEET NO. S215 | PAGE NO. 0194

cad–02 Jul 05, 2013 – 1:53pm P:\BART Berryessa Extension Line\S – STRUCTURAL MILPITAS\WORK_6–10–2012\C700–S–DB–S215.dwg

NOTE:

1. FOR GENERAL NOTES SEE DWG NO DB–S001X, DB–S002X, AND DB–S003X.

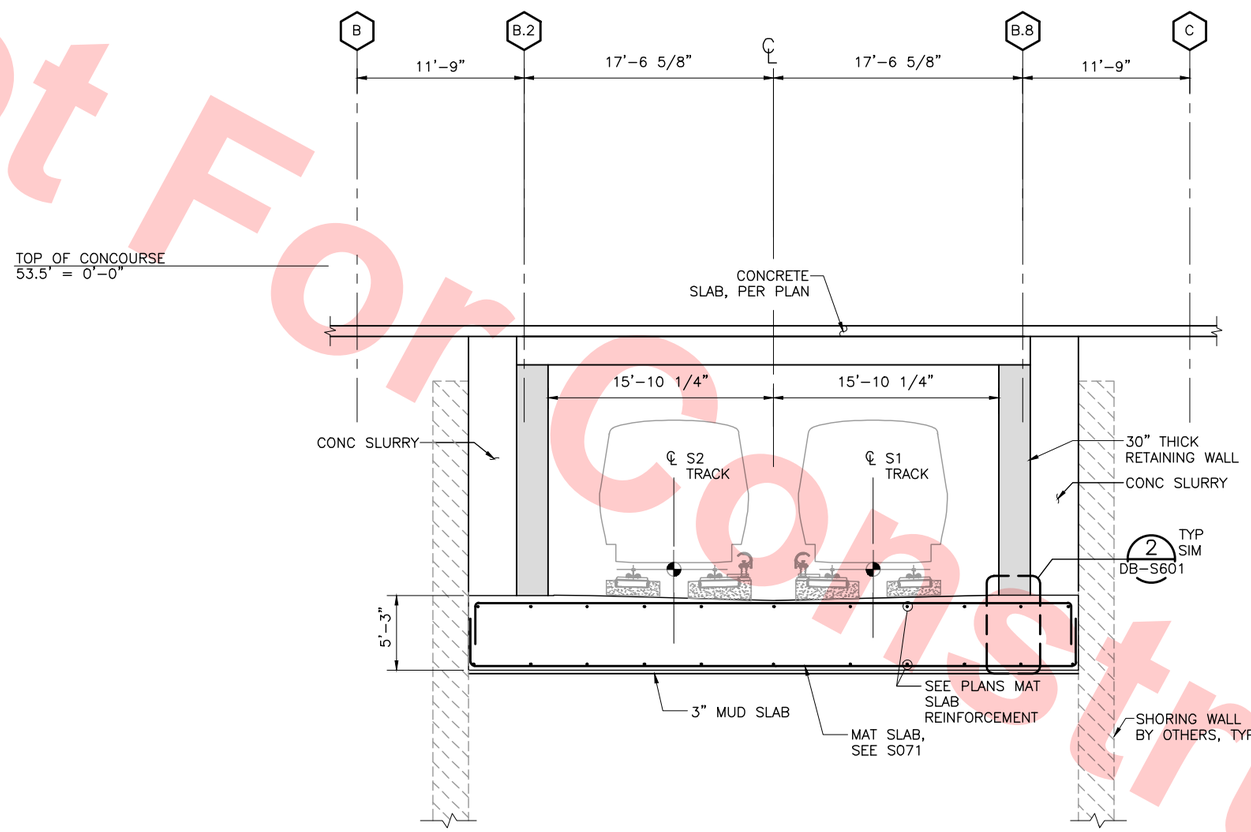

TRANSVERSE SECTION

SCALE: 3/16"=1'–0"

DB–S071
DB–S111
DB–S121
DB–S201X
DB–S204X

FOR REFERENCE ONLY AND NOT FOR REVIEW.
THIS DRAWING WAS SUBMITTED UNDER
DU-23-WP08 TRENCH PACKAGE

8' 0' 8' 16'
GRAPHIC SCALE

Not For Construction

REV	DATE	BY	SUB	APP	DESCRIPTION
0	20130531				READINESS FOR CONSTRUCTION

DESIGNED BY J. REBER, S.E.
DRAWN BY P. DIAZ
CHECKED BY M. TARAZI
IN CHARGE M. TARAZI
DATE 20130531

REGISTERED PROFESSIONAL ENGINEER NORMAN FUAD TARAZI # S 3185 EXP.8/30/14 STRUCTURAL STATE OF CALIFORNIA

Skanska Shimmick Herzog
1436 California Circle
Milpitas, California 95035
A Joint Venture

MFT Consulting Engineers, Inc. Anil Verma Associates, Inc.
1773 San Pablo Ave., Suite A3 (510) 222-4106
Pinole, CA 94564 Fax (510) 222-6418

Lockwood, Andrews & Newnam, Inc. A LAN & BALT COMPANY
T·Y·LIN INTERNATIONAL

SUBMITTED _____
APPROVED _____

BART SILICON VALLEY
BART SILICON VALLEY BERRYESSA EXTENSION

LINE, TRACK, STATIONS AND SYSTEMS
DESIGN UNIT 023
MILPITAS STATION
TRANSVERSE SECTION

SHEET 7 OF 7

CADD FILENAME C700–S–DB–S216.dwg
SIZE D | SCALE 3/16" = 1'–0"
CONTRACT NO. C700 | REV. 0
AREA CODE DB | SHEET NO. S216 | PAGE NO. 0195

cad-02 Jul 05, 2013 – 1:53pm P:\BART Berryessa Extension Line\S – STRUCTURAL MILPITAS\WORK_6-10-2012\C700-S-DB-S216.dwg

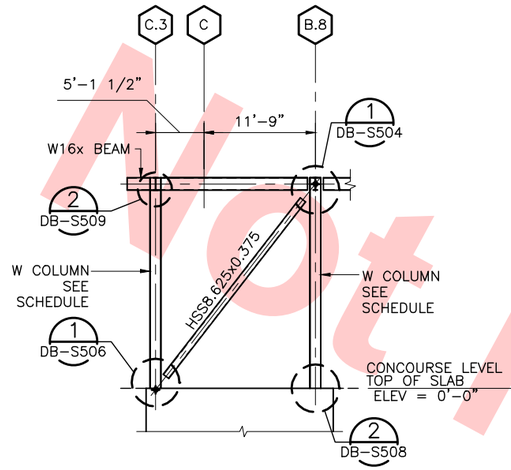

FRAME ELEVATION @ GRID 0.3 (BF-1)
SCALE: 1/8"=1'-0"
DB-S121
DB-S141

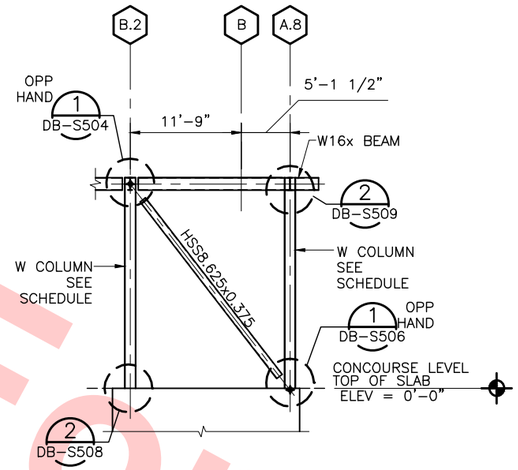

FRAME ELEVATION @ GRID 0.3 (BF-2)
SCALE: 1/8"=1'-0"
DB-S121
DB-S141

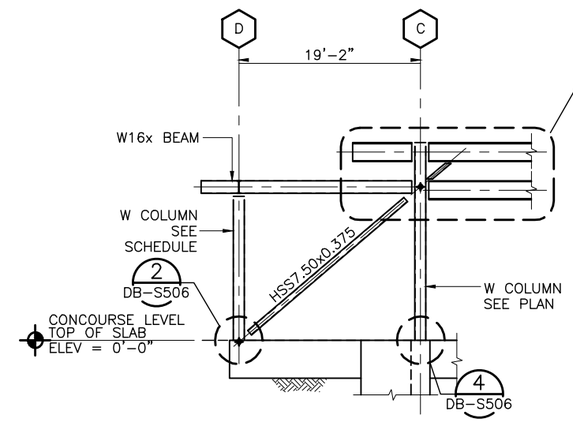

FRAME ELEVATION @ GRID 3 (BF-3)
SCALE: 1/8"=1'-0"
DB-S121
DB-S141

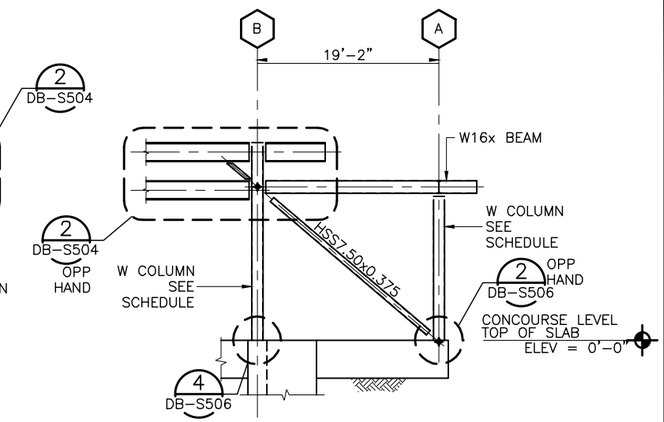

FRAME ELEVATION @ GRID 3 (BF-4)
SCALE: 1/8"=1'-0"
DB-S121
DB-S141

Santa Clara Valley Transportation Authority

____NO EXCEPTIONS TAKEN (NET)
____MAKE CORRECTIONS NOTED (MCN)
____AMEND AND RESUBMIT (A/R)

Any action shown above is subject to the terms of the contract and does not relieve the Contractor of any of its obligations under the contract, including design and detailing.

Contract No.: DB11002F

By: _____ Date: _____

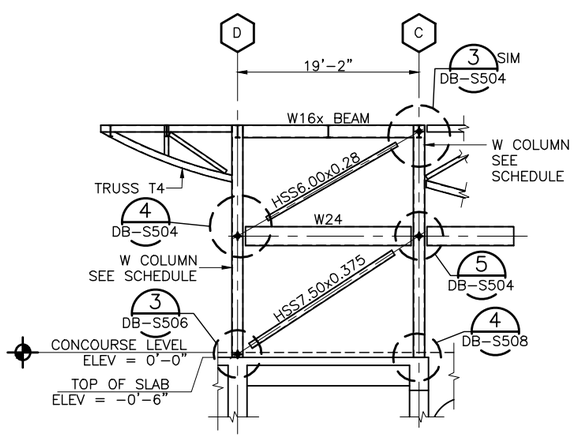

FRAME ELEVATION @ GRID 5 (BF-5)
SCALE: 1/8"=1'-0"
DB-S123
DB-S143

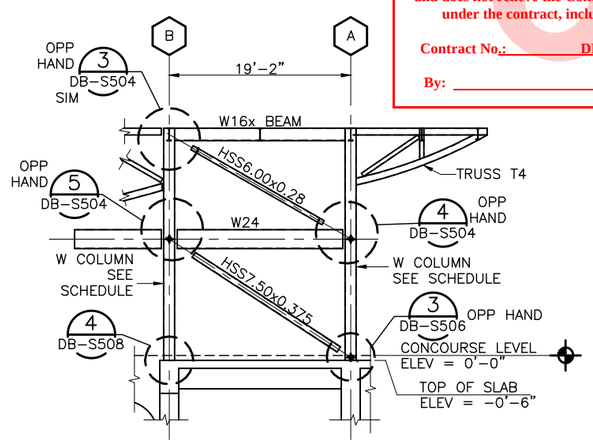

FRAME ELEVATION @ GRID 5 (BF-6)
SCALE: 1/8"=1'-0"
DB-S122
DB-S142

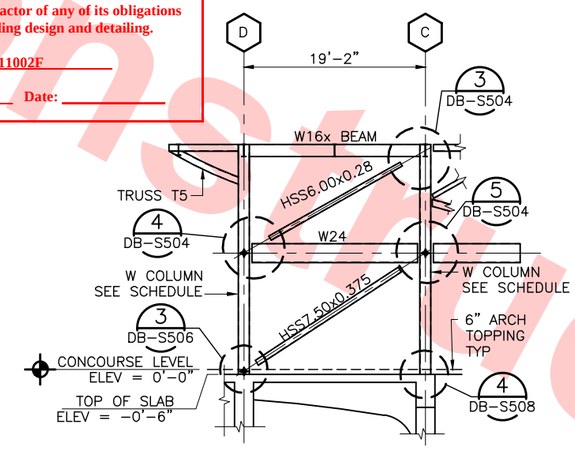

FRAME ELEVATION @ GRID 12 (BF-11)
SCALE: 1/8"=1'-0"
DB-S125
DB-S145

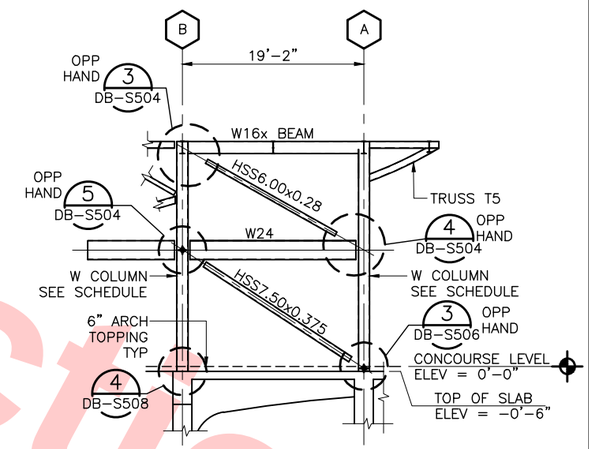

FRAME ELEVATION @ GRID 12 (BF-12)
SCALE: 1/8"=1'-0"
DB-S124
DB-S144

NOTE: REFER TO 5 DB-S511 FOR DIAGONAL BRACE PROTECTED ZONE, TYP.

8' 0' 8' 16'
GRAPHIC SCALE

Not For Construction

REV	DATE	BY	SUB	APP	DESCRIPTION
0	20130710				READINESS FOR CONSTRUCTION

DESIGNED BY J. REBER, S.E.
DRAWN BY P. DIAZ
CHECKED BY M. TARAZI
IN CHARGE M. TARAZI
DATE 20130710

REGISTERED PROFESSIONAL ENGINEER JONAH FUAD TAZI S-3185 EXP. 6/30/14 STRUCTURAL STATE OF CALIFORNIA

Skanska Shimmick Herzog
1436 California Circle Milpitas, California 95035
A Joint Venture

MFT Consulting Engineers, Inc. Anil Verma Associates, Inc.
1773 San Pablo Ave., Suite A3 (510) 222-4106
Pinole, CA 94564 Fax (510) 222-5618
SUBMITTED

Lockwood, Andrews & Newnam, Inc. A LAN & KALL COMPANY
T-Y-LIN INTERNATIONAL
APPROVED

VTA BART SILICON VALLEY
BART SILICON VALLEY BERRYESSA EXTENSION

LINE, TRACK, STATIONS AND SYSTEMS
DESIGN UNIT 023
MILPITAS STATION
STEEL BRACED FRAME
ELEVATIONS & DETAILS
SHEET 1 OF 11

CADD FILENAME C700-S-DB-S501.dwg
SIZE SCALE 1/8"=1'-0"
CONTRACT NO. C700 REV. 0
AREA CODE DB SHEET NO. S501 PAGE NO. 0196

cad-02 Jul 05, 2013 - 1:53pm P:\BART Berryessa Extension Line\S - STRUCTURAL MILPITAS\WORK_6-10-2012\C700-S-DB-S501.dwg

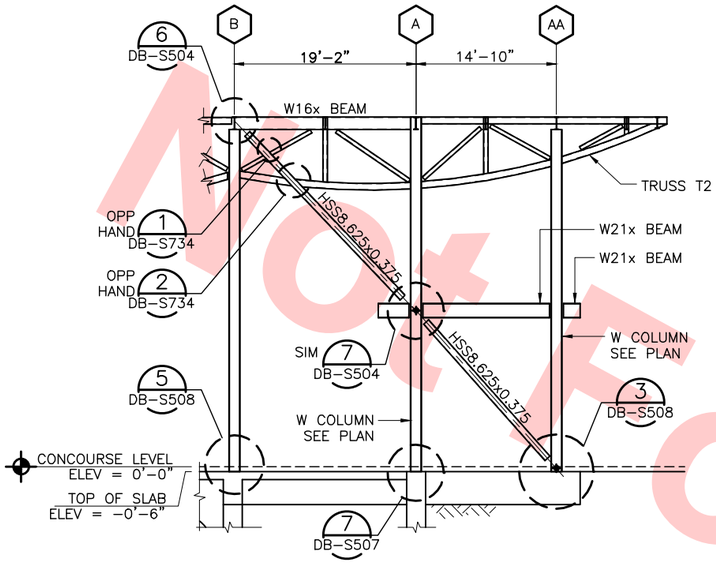

FRAME ELEVATION @ GRID 7 & 10 (BF-8)(BF-10)

SCALE: 1/8"=1'-0"

DB-S122
DB-S124
DB-S142
DB-S144

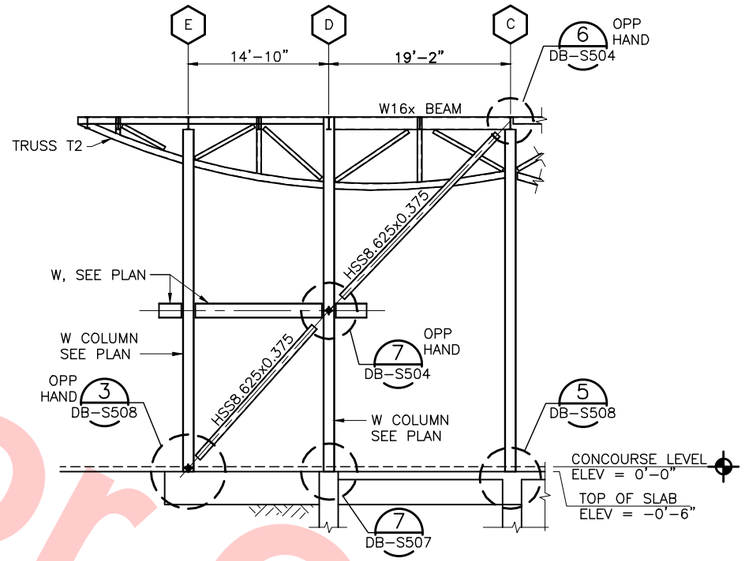

FRAME ELEVATION @ GRID 7 & 10 (BF-7)(BF-9)

SCALE: 1/8"=1'-0"

DB-S123
DB-S125
DB-S143
DB-S145

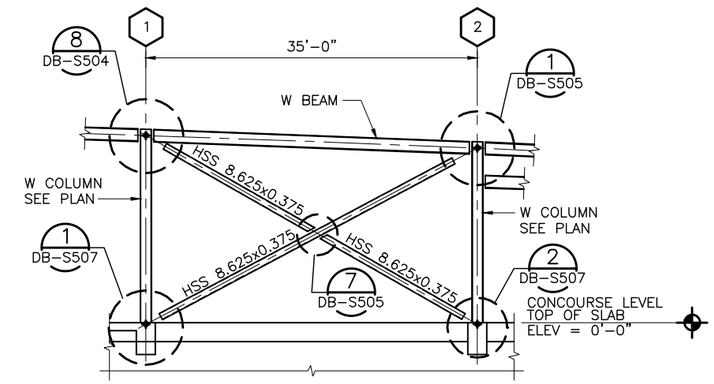

FRAME ELEVATION @ GRID B & C (BF-13)(BF-14)

SCALE: 1/8"=1'-0"

DB-S121
DB-S141

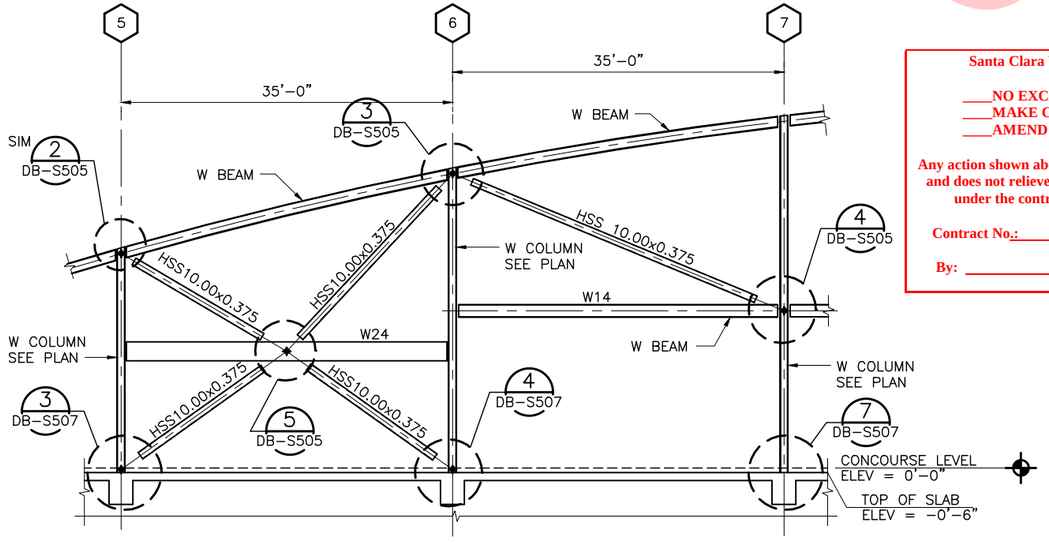

FRAME ELEVATION @ GRID A & D (BF-15)(BF-16)

SCALE: 1/8"=1'-0"

DB-S122
DB-S123
DB-S142
DB-S143

Santa Clara Valley Transportation Authority

____NO EXCEPTIONS TAKEN (NET)
____MAKE CORRECTIONS NOTED (MCN)
____AMEND AND RESUBMIT (A/R)

Any action shown above is subject to the terms of the contract and does not relieve the Contractor of any of its obligations under the contract, including design and detailing.

Contract No.: DB11002F

By: _____ Date: _____

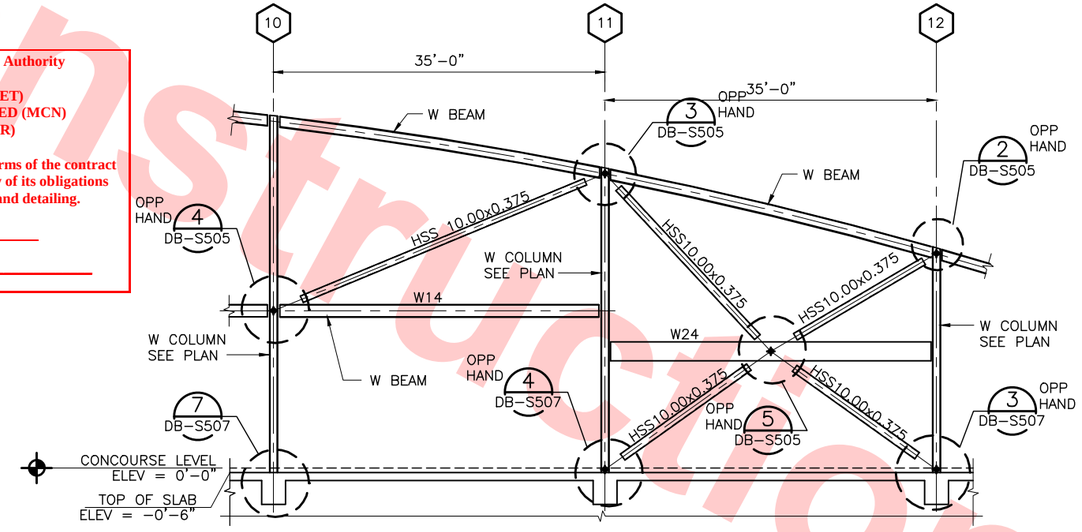

FRAME ELEVATION @ GRID A & D (BF-17)(BF-18)

SCALE: 1/8"=1'-0"

DB-S124
DB-S125

Not For Construction

REV	DATE	BY	SUB	APP	DESCRIPTION
0	20130710				READINESS FOR CONSTRUCTION

DESIGNED BY J. REBER, S.E.
DRAWN BY P. DIAZ
CHECKED BY M. TARAZI
IN CHARGE M. TARAZI
DATE 20130710

REGISTERED PROFESSIONAL ENGINEER SUMAN FUAD TAHA S-3185 EXP. 8/30/14 STRUCTURAL STATE OF CALIFORNIA

Skanska Shimmick Herzog
1436 California Circle
Milpitas, California 95035
A Joint Venture

MFT Consulting Engineers, Inc. 1773 San Pablo Ave., Suite A3 Pinole, CA 94564 (510) 222-4106 Fax (510) 222-4410
Anil Verma Associates, Inc.
Lockwood, Andrews & Newnam, Inc. A LEO A DALY COMPANY
T-Y-LIN INTERNATIONAL

SUBMITTED _____ APPROVED _____

BART SILICON VALLEY
BART SILICON VALLEY BERRYESSA EXTENSION

LINE, TRACK, STATIONS AND SYSTEMS
DESIGN UNIT 023
MILPITAS STATION
STEEL BRACED FRAME
ELEVATIONS & DETAILS
SHEET 2 OF 11

CADD FILENAME C700-S-DB-S502.dwg
SIZE D | SCALE 1/8"=1'-0"
CONTRACT NO. C700 | REV. 0
AREA CODE DB | SHEET NO. S502 | PAGE NO. 0197

cad-02 Jul 05, 2013 - 1:53pm P:\BART Berryessa Extension Line\S - STRUCTURAL MILPITAS\WORK_6-10-2012\C700-S-DB-S502.dwg

Not For Construction

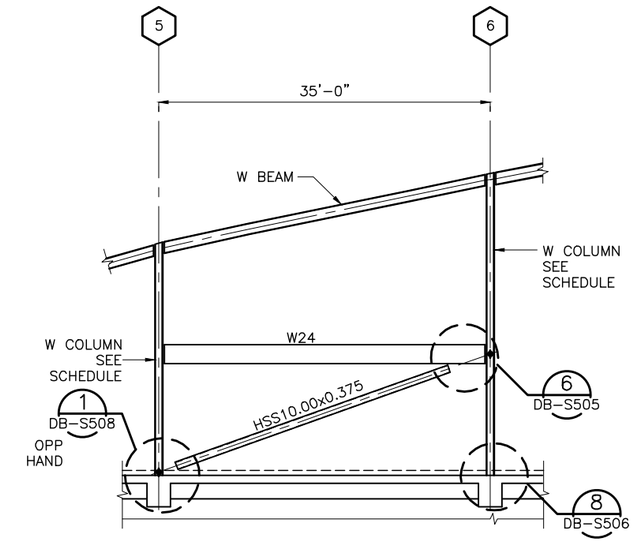

FRAME ELEVATION @ GRID B & C BF-19 BF-20

SCALE: 1/8"=1'-0"

DB-S122
DB-S123

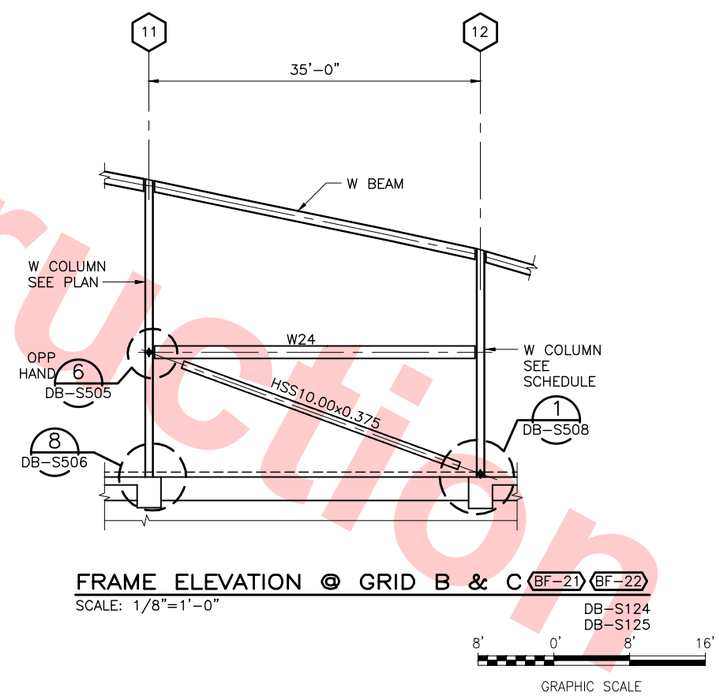

FRAME ELEVATION @ GRID B & C BF-21 BF-22

SCALE: 1/8"=1'-0"

DB-S124
DB-S125

Santa Clara Valley Transportation Authority

____NO EXCEPTIONS TAKEN (NET)
____MAKE CORRECTIONS NOTED (MCN)
____AMEND AND RESUBMIT (A/R)

Any action shown above is subject to the terms of the contract and does not relieve the Contractor of any of its obligations under the contract, including design and detailing.

Contract No.: DB11002F

By: _____ Date: _____

REV	DATE	BY	SUB	APP	DESCRIPTION
0	20130710				READINESS FOR CONSTRUCTION

DESIGNED BY J. REBER, S.E.
DRAWN BY P. DIAZ
CHECKED BY M. TARAZI
IN CHARGE M. TARAZI
DATE 20130710

REGISTERED PROFESSIONAL ENGINEER SUMAN FUAD TAZI S-3185 EXP. 8/30/14 STRUCTURAL STATE OF CALIFORNIA

Skanska Shimmick Herzog
1436 California Circle
Milpitas, California 95035
A Joint Venture

MFT Consulting Engineers, Inc. Anil Verma Associates, Inc.
1773 San Pablo Ave., Suite A3 (510) 222-4106
Pinole, CA 94564 Fax (510) 222-4410

SUBMITTED

Lockwood, Andrews & Newnam, Inc. A LEO A DALY COMPANY
T-Y-LIN INTERNATIONAL

APPROVED

VTA BART SILICON VALLEY
BART SILICON VALLEY BERRYESSA EXTENSION

LINE, TRACK, STATIONS AND SYSTEMS
DESIGN UNIT 023
MILPITAS STATION
STEEL BRACED FRAME
ELEVATIONS & DETAILS
SHEET 3 OF 11

CADD FILENAME C700-S-DB-S503.dwg
SIZE D | SCALE 1/8"=1'-0"
CONTRACT NO. C700 | REV. 0
AREA CODE DB | SHEET NO. S503 | PAGE NO. 0198

cad-02 Jul 05, 2013 - 1:53pm P:\BART Berryessa Extension Line\S - STRUCTURAL MILPITAS\WORK_6-10-2012\C700-S-DB-S503.dwg

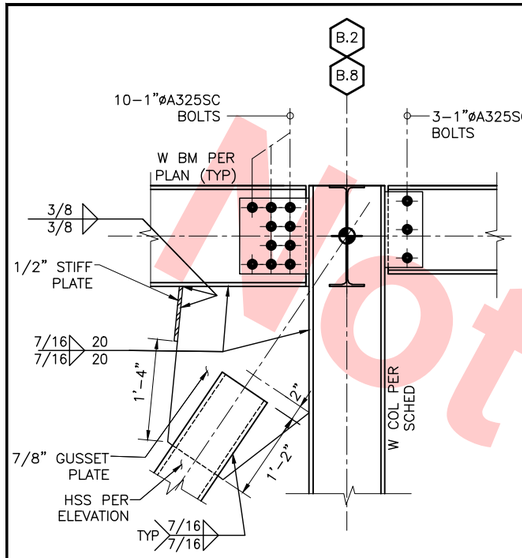

DETAIL 1 DB–S504 DB–S501
SCALE: 1"=1'–0"

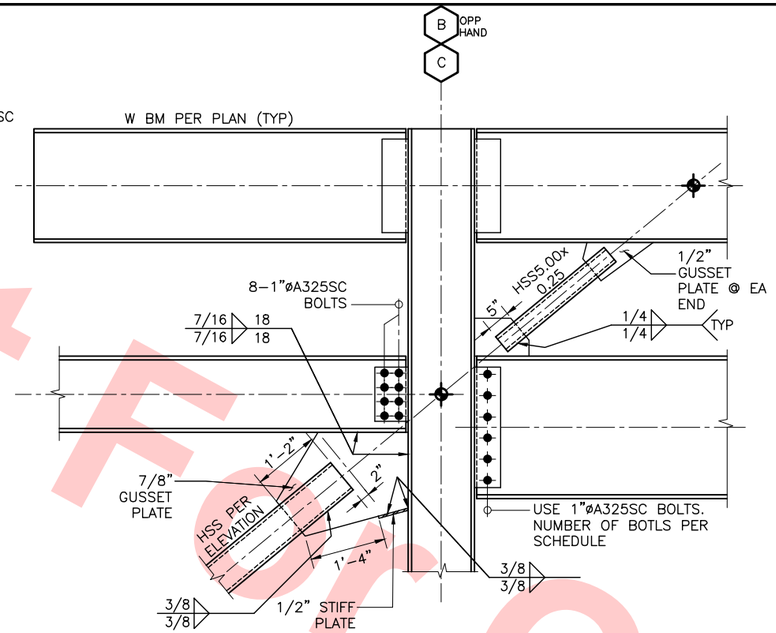

DETAIL 2 DB–S504 DB–S501
SCALE: 3/4"=1'–0"

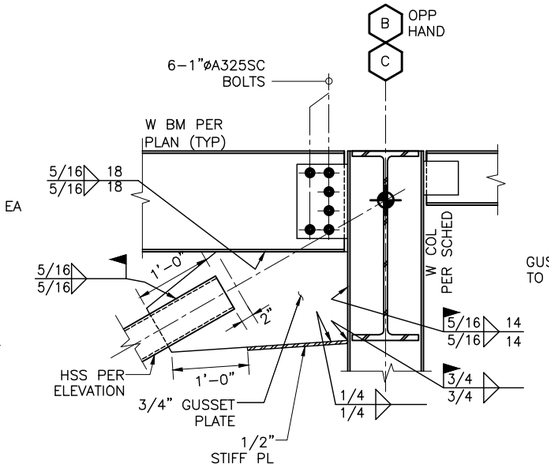

DETAIL 3 DB–S504 DB–S501
SCALE: 1"=1'–0"

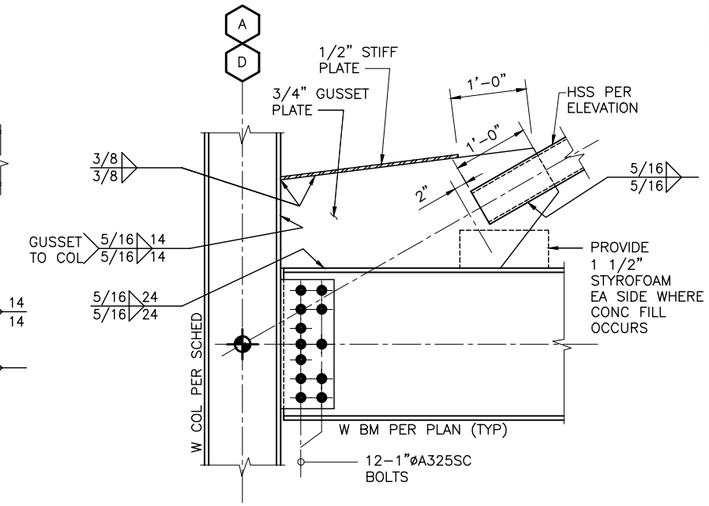

DETAIL 4 DB–S504 DB–S501
SCALE: 1"=1'–0"

Santa Clara Valley Transportation Authority

____NO EXCEPTIONS TAKEN (NET)
____MAKE CORRECTIONS NOTED (MCN)
____AMEND AND RESUBMIT (A/R)

Any action shown above is subject to the terms of the contract and does not relieve the Contractor of any of its obligations under the contract, including design and detailing.

Contract No.: DB11002F

By: _____ Date: _____

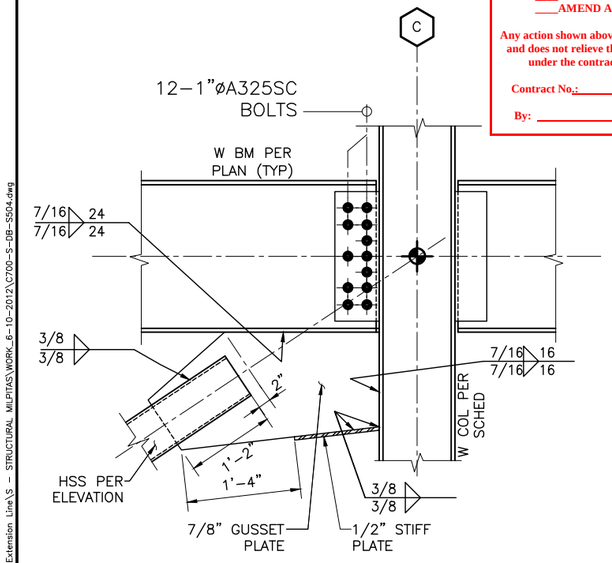

DETAIL 5 DB–S504 DB–S501
SCALE: 1"=1'–0"

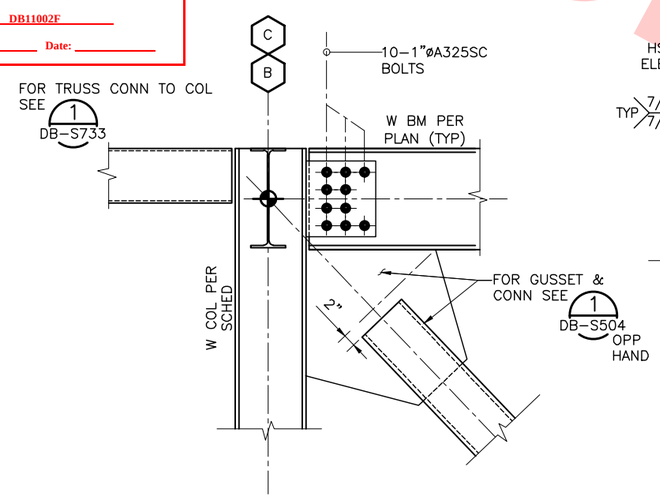

DETAIL 6 DB–S504 DB–S502
SCALE: 1"=1'–0"

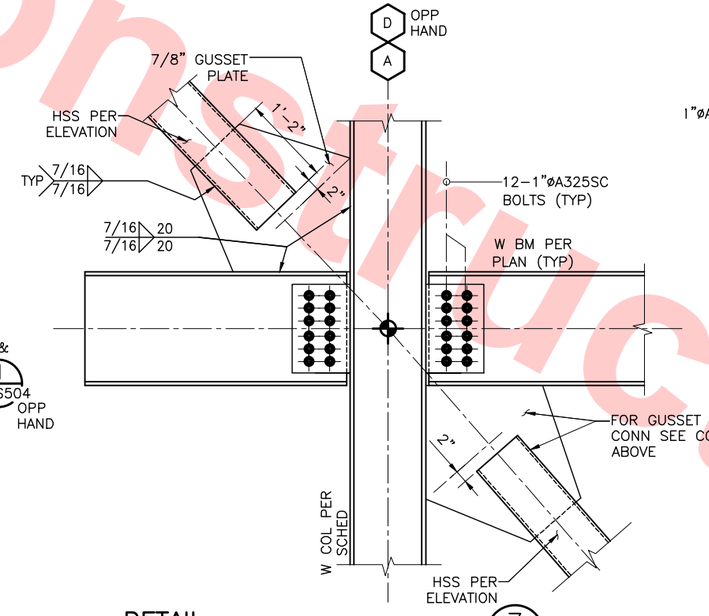

DETAIL 7 DB–S504 DB–S502
SCALE: 1"=1'–0"

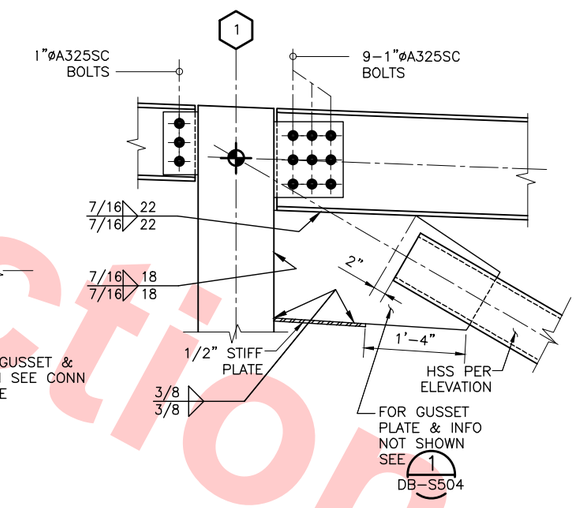

DETAIL 8 DB–S504 DB–S502
SCALE: 1"=1'–0"

Not For Construction

REV	DATE	BY	SUB	APP	DESCRIPTION
0	20130710				READINESS FOR CONSTRUCTION

DESIGNED BY J. REBER, S.E.
DRAWN BY P. DIAZ
CHECKED BY M. TARAZI
IN CHARGE M. TARAZI
DATE 20130710

REGISTERED PROFESSIONAL ENGINEER SUMAN FUAD TAYEH S-3185 EXP. 6/30/14 STRUCTURAL STATE OF CALIFORNIA

Skanska Shimmick Herzog
1436 California Circle
Milpitas, California 95035
A Joint Venture

MFT Consulting Engineers, Inc. 1773 San Pablo Ave., Suite A3 Pinole, CA 94564 (510) 222-4106 Fax (510) 222-5415
Anil Verma Associates, Inc.
Lockwood, Andrews & Newnam, Inc. A LEO A DALY COMPANY
T-Y-LIN INTERNATIONAL

SUBMITTED _____ APPROVED _____

BART SILICON VALLEY
BART SILICON VALLEY BERRYESSA EXTENSION

LINE, TRACK, STATIONS AND SYSTEMS
DESIGN UNIT 023
MILPITAS STATION
STEEL BRACED FRAME
ELEVATIONS & DETAILS
SHEET 4 OF 11

CADD FILENAME C700–S–DB–S504.dwg
SIZE | SCALE AS NOTED
CONTRACT NO. C700 | REV. 0
AREA CODE DB | SHEET NO. S504 | PAGE NO. 0199

cad–02 Jul 05, 2013 – 1:53pm P:\BART Berryessa Extension Line\S – STRUCTURAL MILPITAS\WORK_6–10–2012\C700–S–DB–S504.dwg

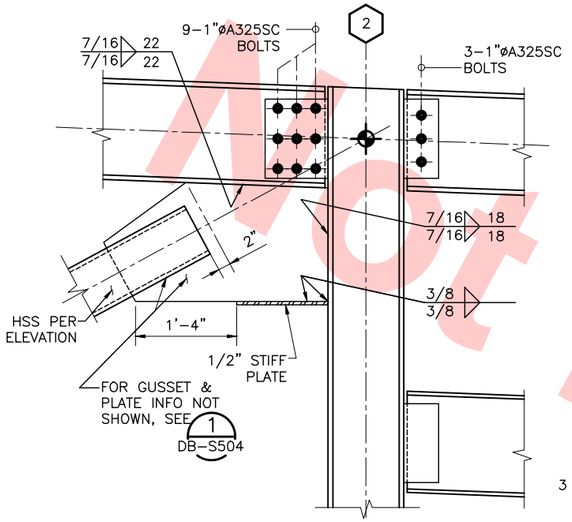

DETAIL 1 DB-S505 DB-S502
SCALE: 1"=1'-0"

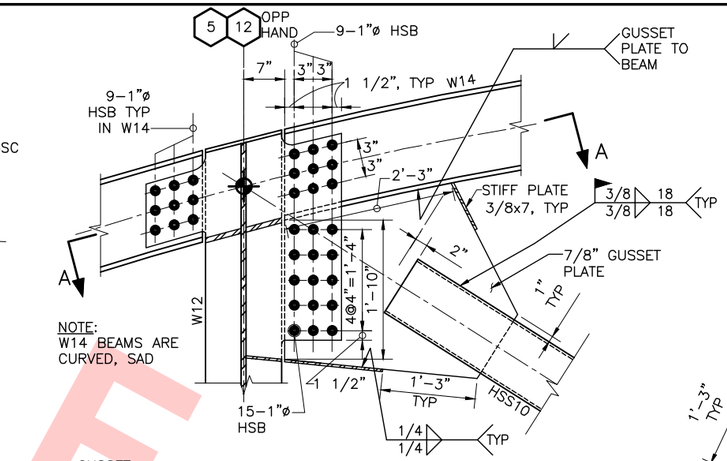

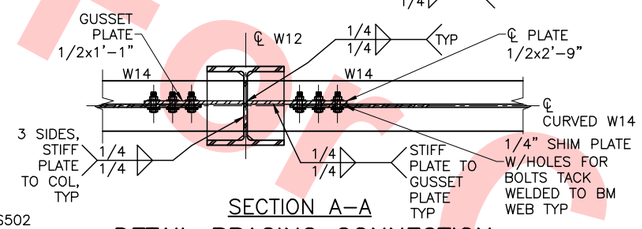

SECTION A-A

DETAIL BRACING CONNECTION @ GRID A & D 2 DB-S505 DB-S502
SCALE: 1"=1'-0"

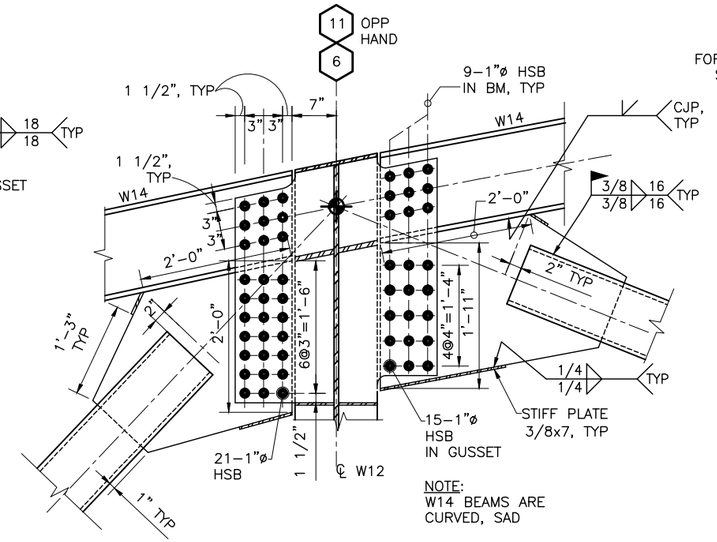

DETAIL BRACING CONNECTION @ GRID A & D 3 DB-S505 DB-S502
SCALE: 1"=1'-0"

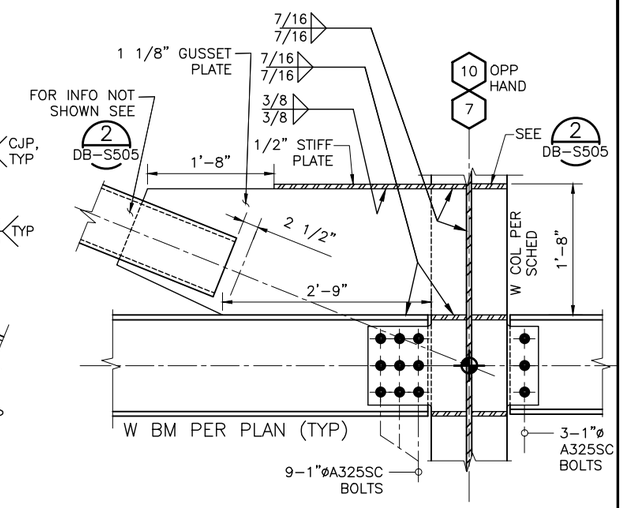

DETAIL BRACING CONNECTION @ GRID A & D 4 DB-S505 DB-S502
SCALE: 1"=1'-0"

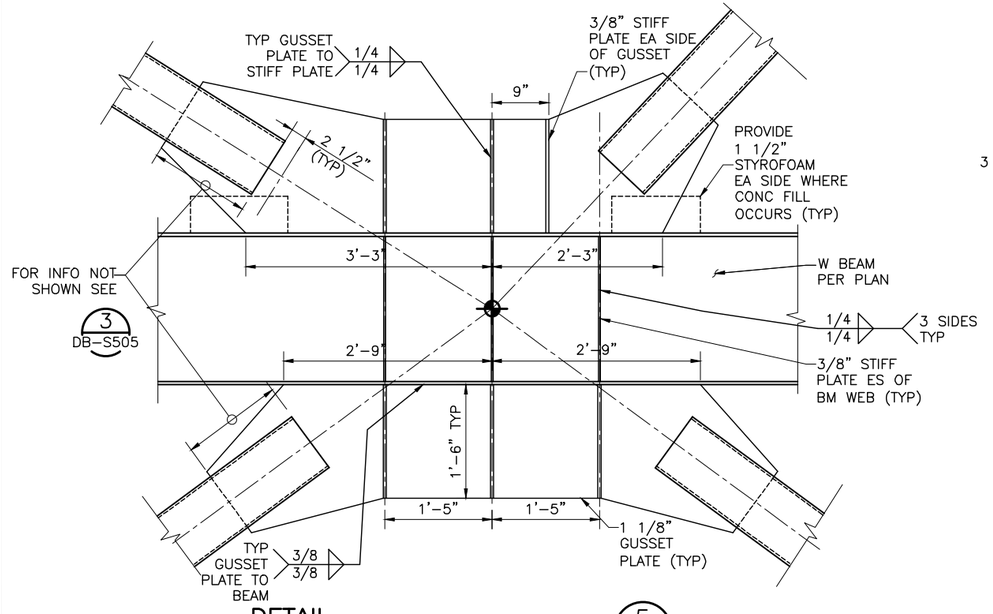

DETAIL 5 DB-S505 DB-S502
SCALE: 1"=1'-0"

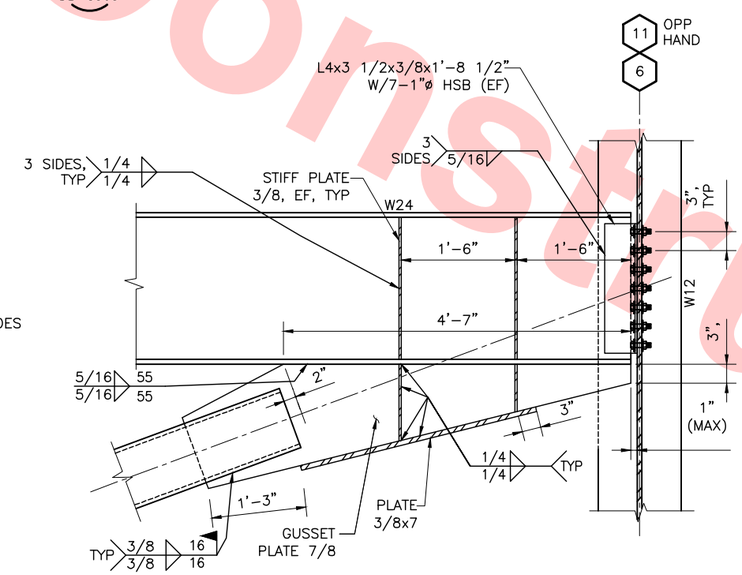

DETAIL BRACING CONNECTION @ GRID B & C 6 DB-S505 DB-S503
SCALE: 1"=1'-0"

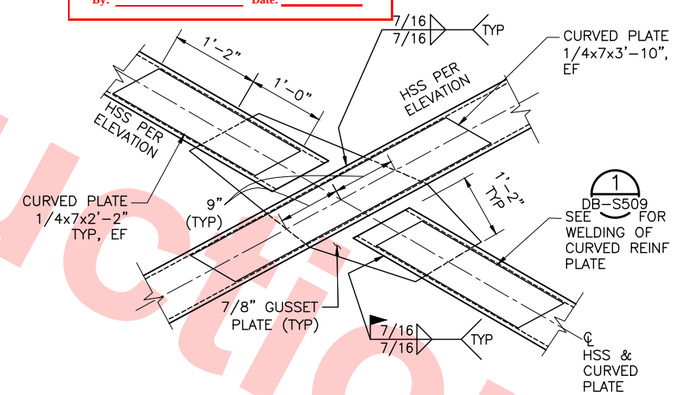

DETAIL 7 DB-S505 DB-S502
SCALE: 1"=1'-0"

Santa Clara Valley Transportation Authority

____NO EXCEPTIONS TAKEN (NET)
____MAKE CORRECTIONS NOTED (MCN)
____AMEND AND RESUBMIT (A/R)

Any action shown above is subject to the terms of the contract and does not relieve the Contractor of any of its obligations under the contract, including design and detailing.

Contract No.: DB11002F

By: _____ Date: _____

Not For Construction

REV	DATE	BY	SUB	APP	DESCRIPTION
0	20130710				READINESS FOR CONSTRUCTION

DESIGNED BY J. REBER, S.E.
DRAWN BY P. DIAZ
CHECKED BY M. TARAZI
IN CHARGE M. TARAZI
DATE 20130710

REGISTERED PROFESSIONAL ENGINEER SOHAM PUAD # S-3185 EXP. 6/30/14 STRUCTURAL STATE OF CALIFORNIA

Skanska Shimmick Herzog
1436 California Circle Milpitas, California 95035
A Joint Venture

MFT Consulting Engineers, Inc. 1773 San Pablo Ave., Suite A3 Pinole, CA 94564 (510) 222-4106 Fax (510) 222-4115
Anil Verma Associates, Inc.
Lockwood, Andrews & Newnam, Inc. A JACOBS COMPANY
T-Y-LIN INTERNATIONAL
SUBMITTED
APPROVED

BART SILICON VALLEY
BART SILICON VALLEY BERRYESSA EXTENSION

LINE, TRACK, STATIONS AND SYSTEMS DESIGN UNIT 023
MILPITAS STATION
STEEL BRACED FRAME
ELEVATIONS & DETAILS
SHEET 5 OF 11

CADD FILENAME C700-S-DB-S505.dwg
SIZE D | SCALE AS NOTED
CONTRACT NO. C700 | REV. 0
AREA CODE DB | SHEET NO. S505 | PAGE NO. 0200

cad-02 Jul 05, 2013 - 1:53pm P:\BART Berryessa Extension Line\S - STRUCTURAL MILPITAS\WORK_6-10-2012\C700-S-DB-S505.dwg

Santa Clara Valley Transportation Authority

____NO EXCEPTIONS TAKEN (NET)
____MAKE CORRECTIONS NOTED (MCN)
____AMEND AND RESUBMIT (A/R)

Any action shown above is subject to the terms of the contract and does not relieve the Contractor of any of its obligations under the contract, including design and detailing.

Contract No.: DB11002F

By: _____ Date: _____

Not for Construction

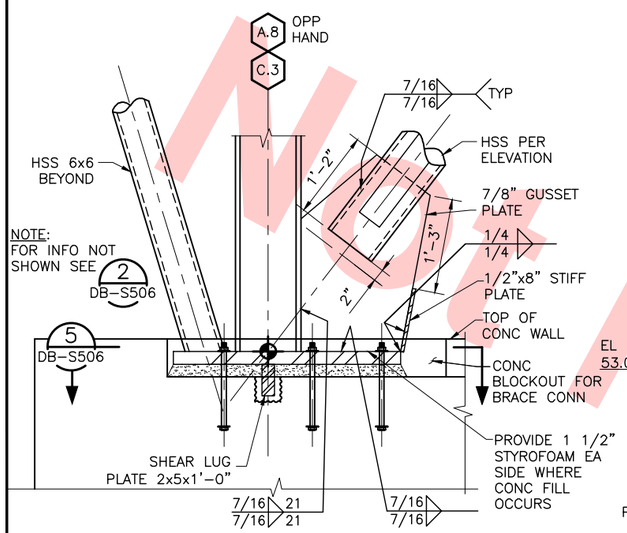

BRACE TO BASE PLATE 1 DB-S506 DB-S501
SCALE: 1"=1'-0"

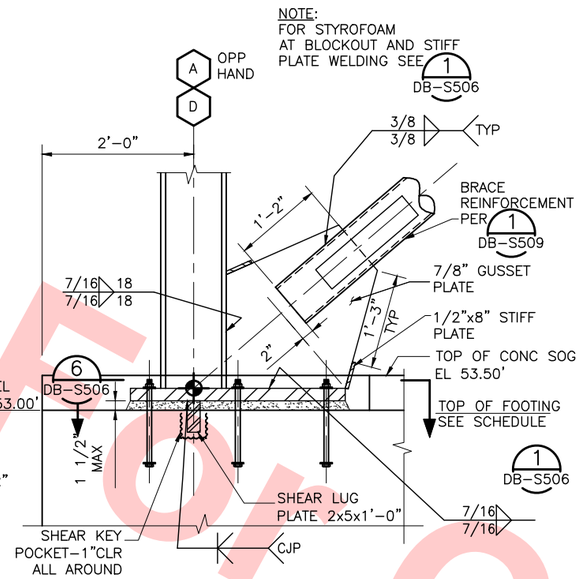

BRACE TO BASE PLATE 2 DB-S506 DB-S501
SCALE: 1"=1'-0"

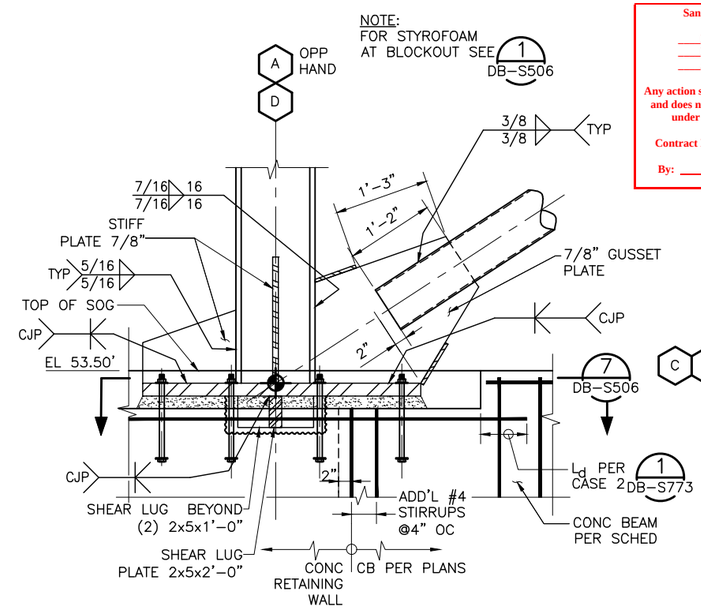

BRACE TO BASE PLATE 3 DB-S506 DB-S501
SCALE: 1"=1'-0"

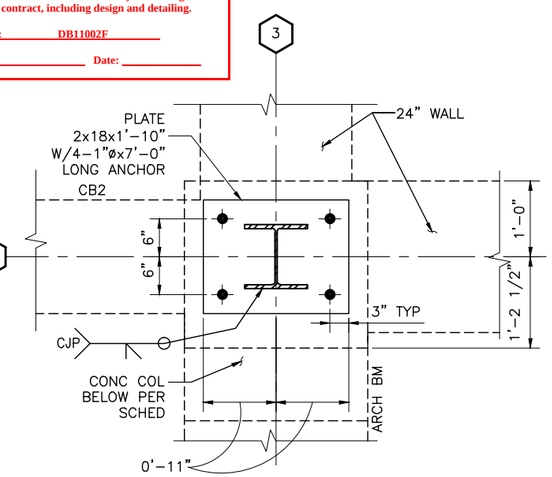

DETAIL PLAN 4 DB-S506 DB-S501
SCALE: 1"=1'-0"

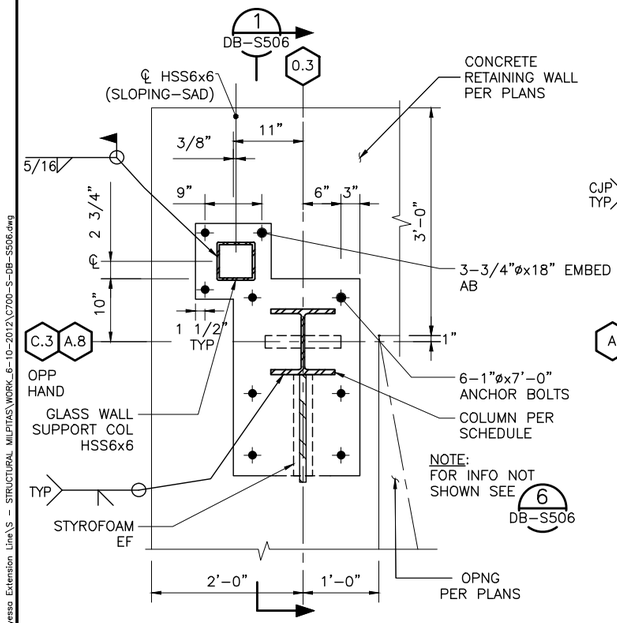

BASE PLATE DETAIL 5 DB-S506 DB-S501
SCALE: 1"=1'-0"

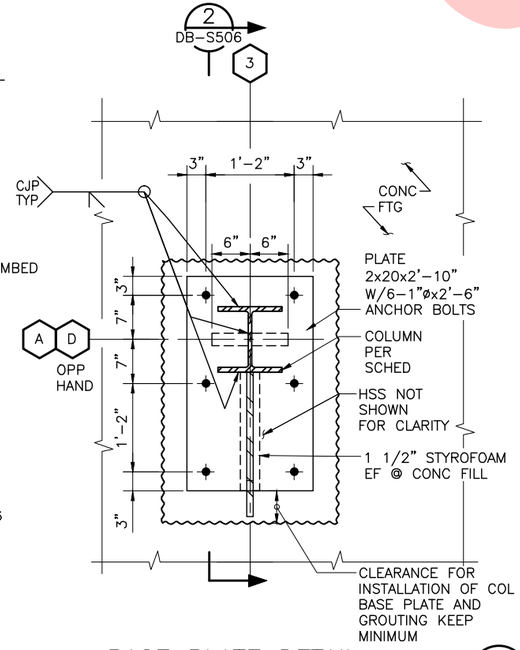

BASE PLATE DETAIL 6 DB-S506 DB-S501
SCALE: 1"=1'-0"

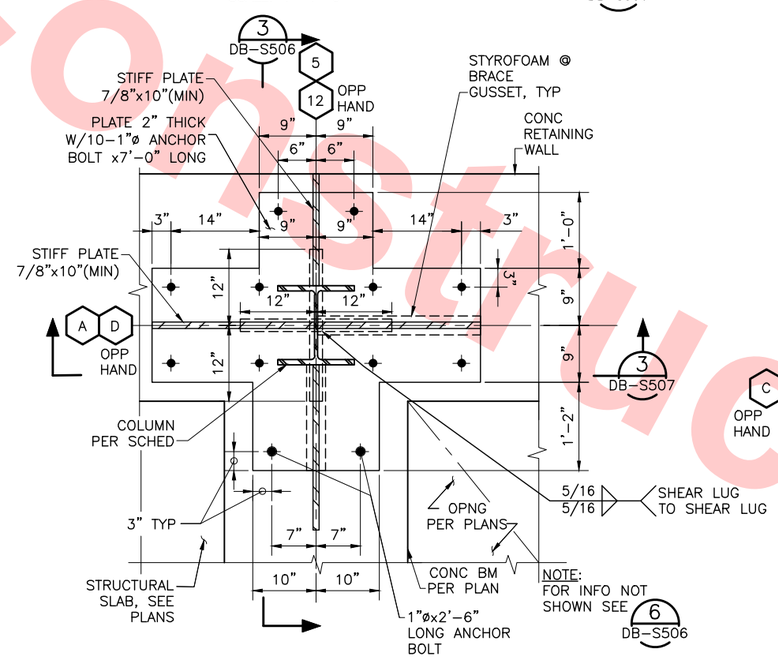

BASE PLATE DETAIL 7 DB-S506 DB-S501 DB-S507
SCALE: 1"=1'-0"

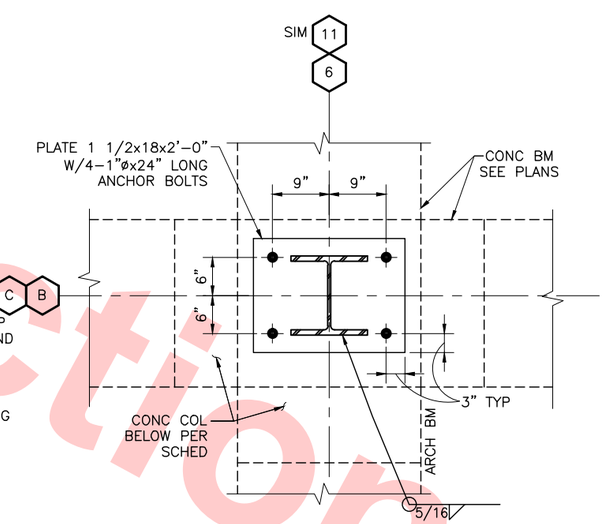

DETAIL PLAN 8 DB-S506 DB-S503
SCALE: 1"=1'-0"

REV	DATE	BY	SUB	APP	DESCRIPTION
0	20130710				READINESS FOR CONSTRUCTION

DESIGNED BY J. REBER, S.E.
DRAWN BY P. DIAZ
CHECKED BY M. TARAZI
IN CHARGE M. TARAZI
DATE 20130710

REGISTERED PROFESSIONAL ENGINEER SOHAIL FUAD TAZI # S-3185 EXP. 6/30/14 STRUCTURAL STATE OF CALIFORNIA

Skanska Shimmick Herzog
1436 California Circle Milpitas, California 95035
A Joint Venture

MFT Consulting Engineers, Inc. Anil Verma Associates, Inc. 1773 San Pablo Ave., Suite A3 (510) 222-4106 Pinole, CA 94564 Fax (510) 222-5113
SUBMITTED

Lockwood, Andrews & Newnam, Inc. A CH2M HILL COMPANY
T-Y-LIN INTERNATIONAL
APPROVED

VTA BART SILICON VALLEY
BART SILICON VALLEY BERRYESSA EXTENSION

LINE, TRACK, STATIONS AND SYSTEMS
DESIGN UNIT 023
MILPITAS STATION
STEEL BRACED FRAME
ELEVATIONS & DETAILS
SHEET 6 OF 11

CADD FILENAME C700-S-DB-S506.dwg
SIZE D | SCALE 1" = 1'-0"
CONTRACT NO. C700 | REV. 0
AREA CODE DB | SHEET NO. S506 | PAGE NO. 0201

cad-02 Jul 05, 2013 – 1:53pm P:\BART Berryessa Extension Line\S – STRUCTURAL MILPITAS\WORK_6-10-2012\C700-S-DB-S506.dwg

Santa Clara Valley Transportation Authority

____NO EXCEPTIONS TAKEN (NET)
____MAKE CORRECTIONS NOTED (MCN)
____AMEND AND RESUBMIT (A/R)

Any action shown above is subject to the terms of the contract and does not relieve the Contractor of any of its obligations under the contract, including design and detailing.

Contract No.: DB11002F

By: _____ Date: _____

Not For Construction

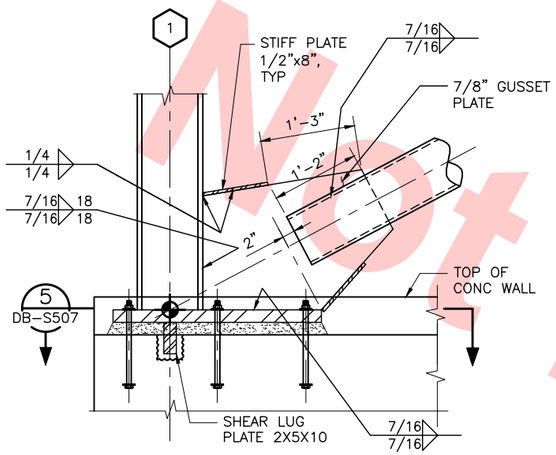

BRACE TO BASE PLATE 1 DB-S507 DB-S502
SCALE: 1"=1'-0"

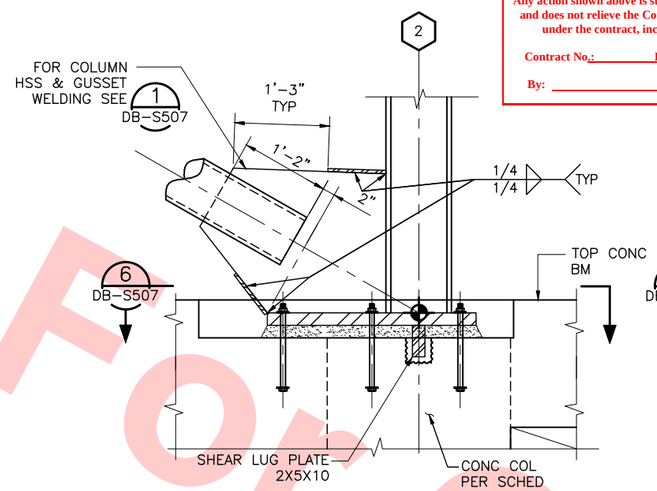

BRACE TO BASE PLATE 2 DB-S507 DB-S502
SCALE: 1"=1'-0"

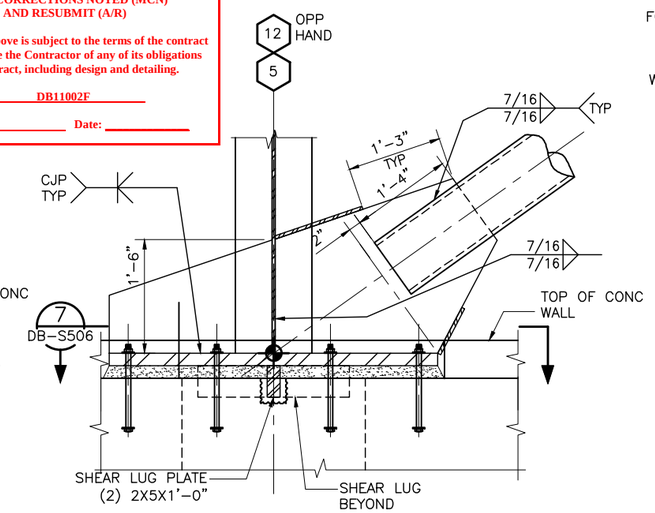

BRACE TO BASE PLATE 3 DB-S507 DB-S502 DB-S506
SCALE: 1"=1'-0"

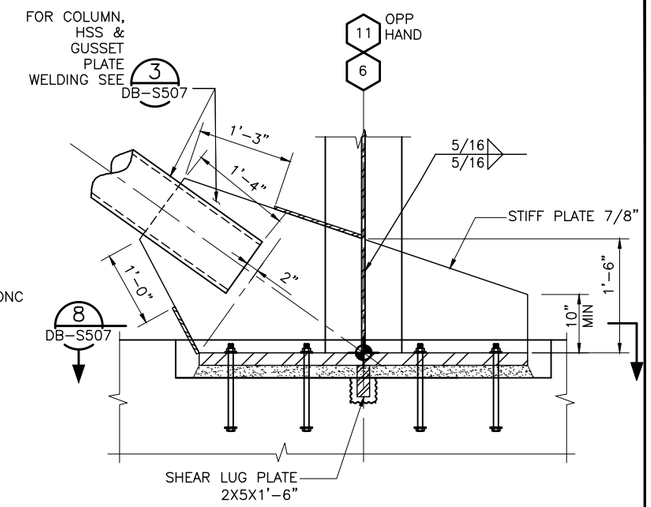

BRACE TO BASE PLATE 4 DB-S507 DB-S502
SCALE: 1"=1'-0"

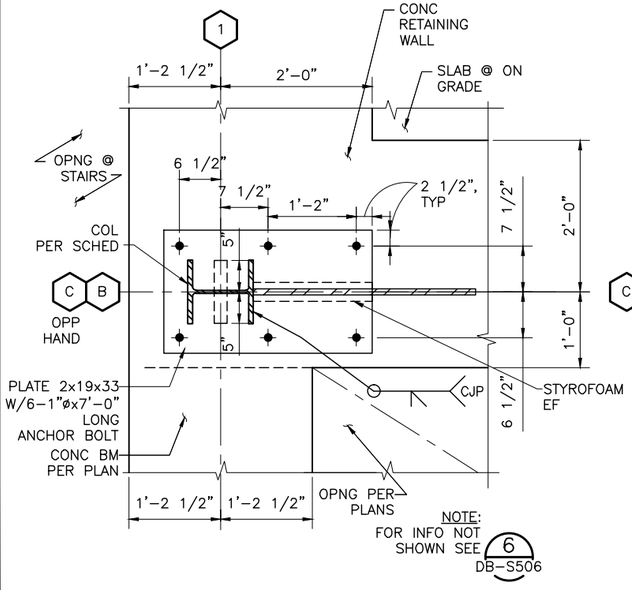

BRACE TO BASE PLATE 5 DB-S507
SCALE: 1"=1'-0"

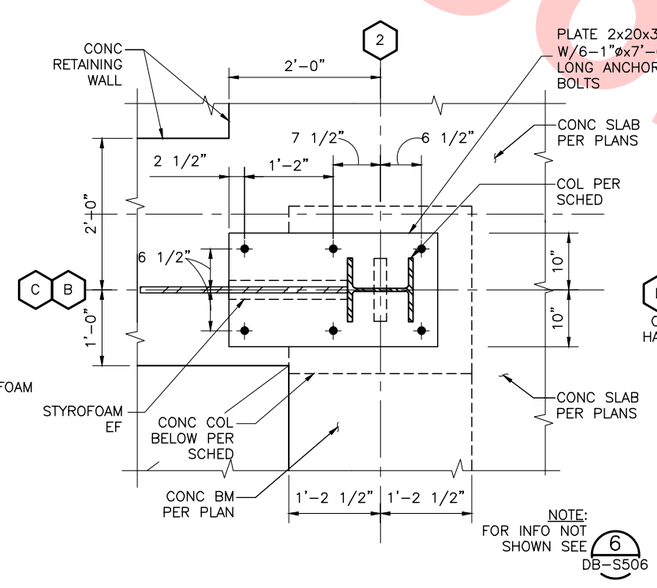

BRACE TO BASE PLATE 6 DB-S507
SCALE: 1"=1'-0"

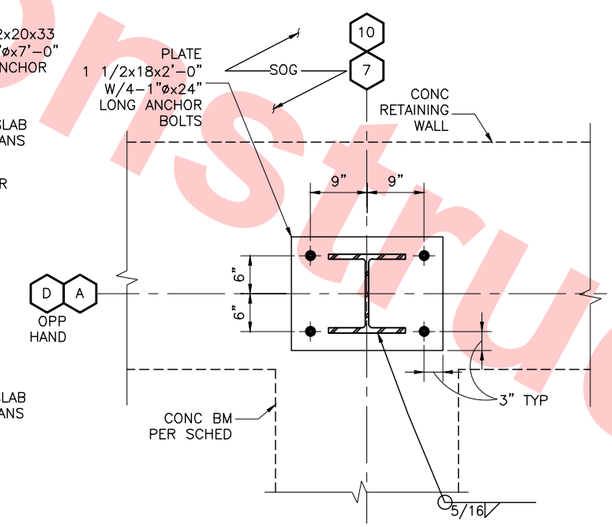

DETAIL PLAN 7 DB-S507 DB-S502
SCALE: 1"=1'-0"

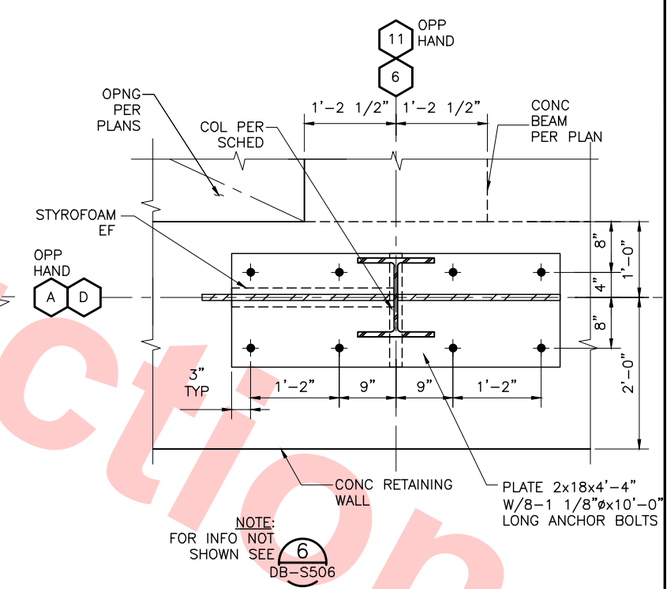

BRACE TO BASE PLATE 8 DB-S507
SCALE: 1"=1'-0"

REV	DATE	BY	SUB	APP	DESCRIPTION
0	20130710				READINESS FOR CONSTRUCTION

DESIGNED BY J. REBER, S.E.
DRAWN BY P. DIAZ
CHECKED BY M. TARAZI
IN CHARGE M. TARAZI
DATE 20130710

REGISTERED PROFESSIONAL ENGINEER SOHAIL FUAD TAYEH # S-3186 EXP. 6/30/14 STRUCTURAL STATE OF CALIFORNIA

Skanska Shimmick Herzog
1436 California Circle Milpitas, California 95035
A Joint Venture

MFT Consulting Engineers, Inc. Anil Verma Associates, Inc.
1773 San Pablo Ave., Suite A3 Pinole, CA 94564 (510) 222-4106 Fax (510) 222-4110
Lockwood, Andrews & Newnam, Inc. A LEO A DALY COMPANY
T-Y-LIN INTERNATIONAL

SUBMITTED
APPROVED

BART SILICON VALLEY
BART SILICON VALLEY BERRYESSA EXTENSION

LINE, TRACK, STATIONS AND SYSTEMS
DESIGN UNIT 023
MILPITAS STATION
STEEL BRACED FRAME
ELEVATIONS & DETAILS
SHEET 7 OF 11

CADD FILENAME C700-S-DB-S507.dwg
SIZE D | SCALE 1" = 1'-0"
CONTRACT NO. C700 | REV. 0
AREA CODE DB | SHEET NO. S507 | PAGE NO. 0202

cad-02 Jul 05, 2013 - 1:53pm P:\BART Berryessa Extension Line\S - STRUCTURAL MILPITAS\WORK_6-10-2012\C700-S-DB-S507.dwg

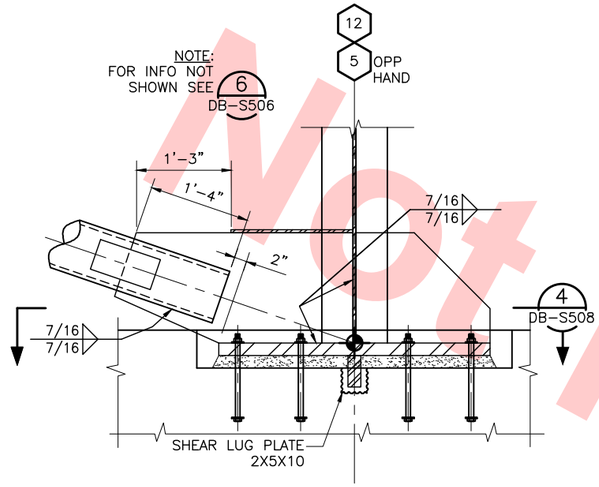

DETAIL PLAN 1 DB-S508 DB-S503
SCALE: 1"=1'-0"

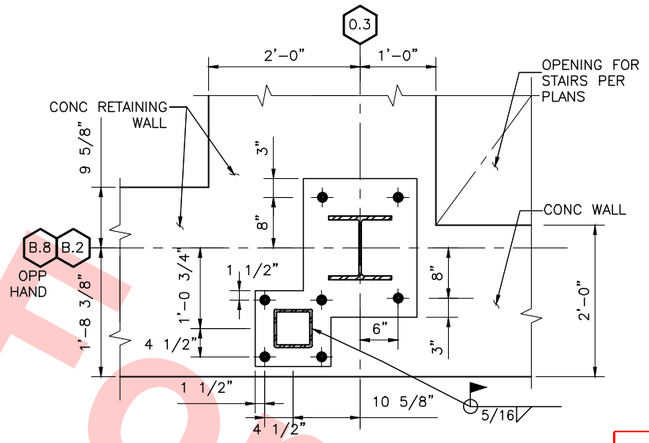

DETAIL PLAN 2 DB-S508 DB-S501
SCALE: 1"=1'-0"

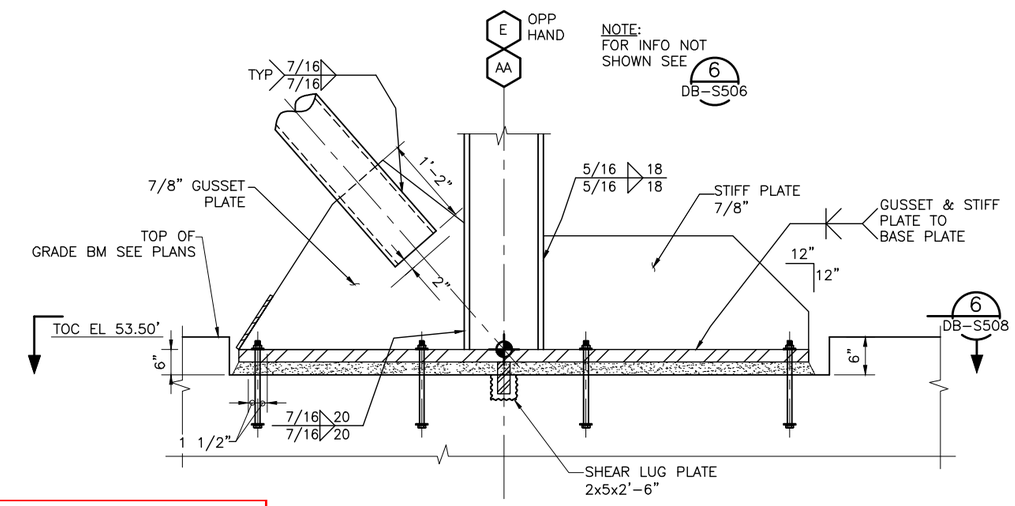

BRACE TO BASE PLATE 3 DB-S508 DB-S502
SCALE: 1"=1'-0"

Santa Clara Valley Transportation Authority

____NO EXCEPTIONS TAKEN (NET)
____MAKE CORRECTIONS NOTED (MCN)
____AMEND AND RESUBMIT (A/R)

Any action shown above is subject to the terms of the contract and does not relieve the Contractor of any of its obligations under the contract, including design and detailing.

Contract No.: DB11002F

By: _____ Date: _____

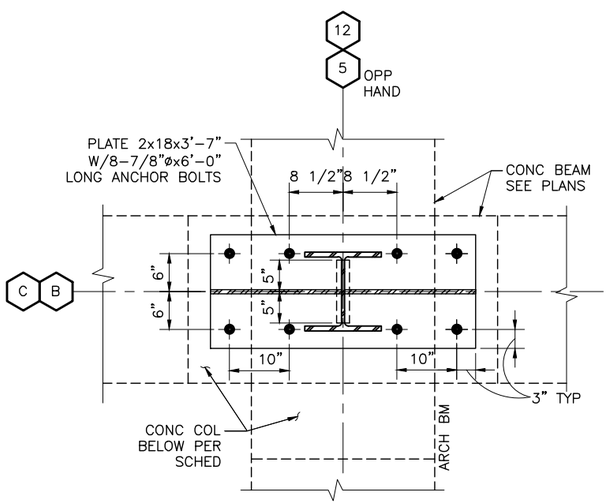

BRACE TO BASE PLATE 4 DB-S508 DB-S508
SCALE: 1"=1'-0"

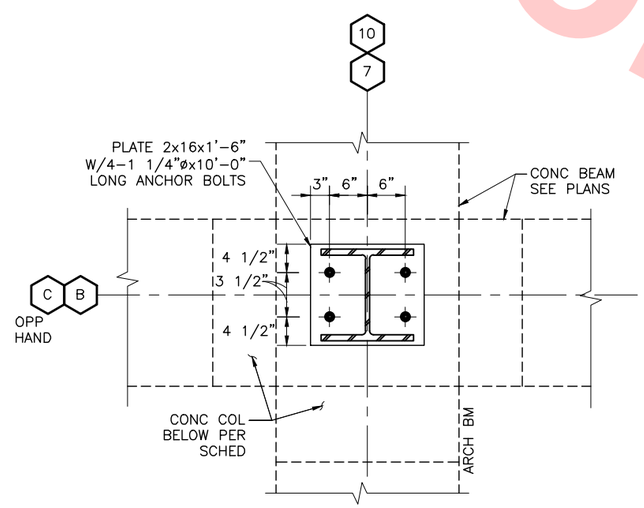

DETAIL PLAN 5 DB-S508 DB-S502
SCALE: 1"=1'-0"

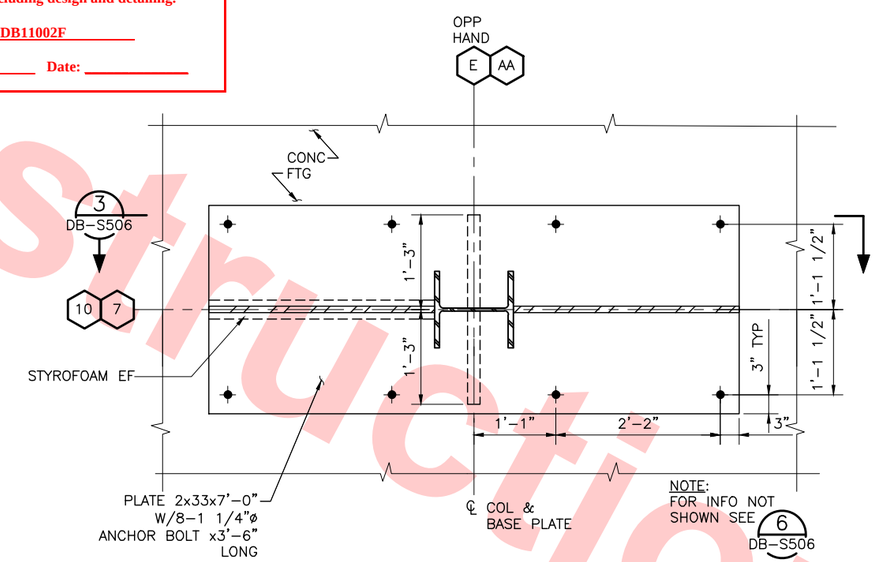

BASE PLATE DETAIL 6 DB-S508 DB-S508
SCALE: 1"=1'-0"

Not For Construction

REV	DATE	BY	SUB	APP	DESCRIPTION
0	20130710				READINESS FOR CONSTRUCTION

DESIGNED BY J. REBER, S.E.
DRAWN BY P. DIAZ
CHECKED BY M. TARAZI
IN CHARGE M. TARAZI
DATE 20130710

REGISTERED PROFESSIONAL ENGINEER SOHAN FUAD YAZBEK # S-3185 EXP. 6/30/14 STRUCTURAL STATE OF CALIFORNIA

Skanska Shimmick Herzog
1436 California Circle
Milpitas, California 95035
A Joint Venture

MFT Consulting Engineers, Inc. 1773 San Pablo Ave., Suite A3 Pinole, CA 94564 (510) 222-4106 Fax (510) 222-4110
Anil Verma Associates, Inc.
Lockwood, Andrews & Newnam, Inc. A LEO A DALY COMPANY
T-Y-LIN INTERNATIONAL

SUBMITTED _____ APPROVED _____

BART SILICON VALLEY
BART SILICON VALLEY BERRYESSA EXTENSION

LINE, TRACK, STATIONS AND SYSTEMS
DESIGN UNIT 023
MILPITAS STATION
STEEL BRACED FRAME
ELEVATIONS & DETAILS
SHEET 8 OF 11

CADD FILENAME C700-S-DB-S508.dwg
SIZE D | SCALE 1" = 1'-0"
CONTRACT NO. C700 | REV. 0
AREA CODE DB | SHEET NO. S508 | PAGE NO. 0203

cad-02 Jul 05, 2013 - 1:53pm P:\BART Berryessa Extension Line\S - STRUCTURAL MILPITAS\WORK_6-10-2012\C700-S-DB-S508.dwg

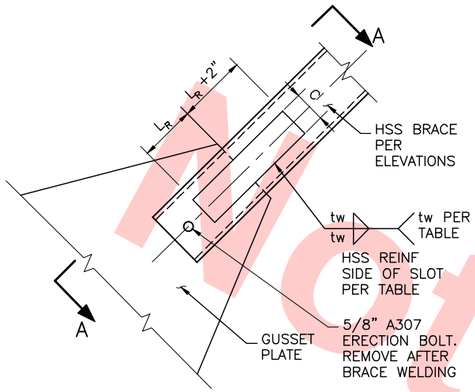

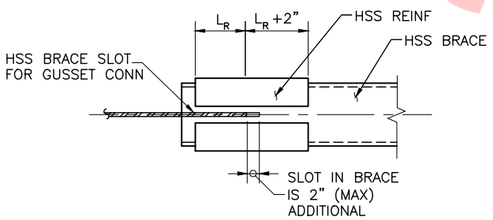

SECTION A–A

BRACE SIZE	L_R	C	tw	REINF SIZE
HSS 10.00x0.375	14	8	3/16	CURVED PLATE 1/4
HSS 8.625x0.375	12	7	3/16	CURVED PLATE 1/4
HSS 7.50x0.375	10	6	3/16	CURVED PLATE 1/4
HSS 6.00x0.280	8	4.5	3/16	CURVED PLATE 1/4

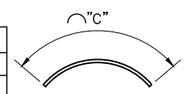

BRACE REINFORCEMENT DETAIL (1 / DB–S509)
SCALE: 1"=1'–0"
DB–S505

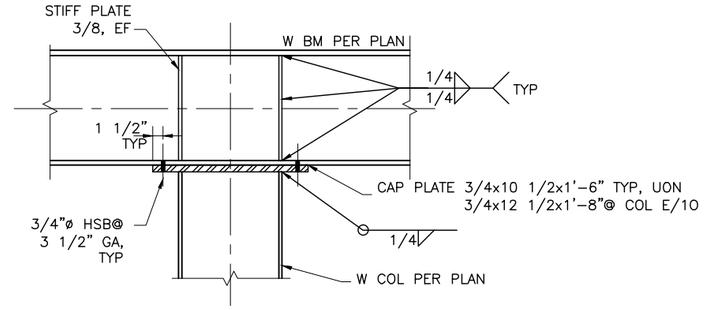

CONT BEAM OVER COLUMN (2 / DB–S509)
SCALE: 1"=1'–0"
DB–S501
DB–S731
DB–S510

Not For Construction

Santa Clara Valley Transportation Authority

____NO EXCEPTIONS TAKEN (NET)
____MAKE CORRECTIONS NOTED (MCN)
____AMEND AND RESUBMIT (A/R)

Any action shown above is subject to the terms of the contract and does not relieve the Contractor of any of its obligations under the contract, including design and detailing.

Contract No.: DB11002F

By: _____ Date: _____

REV	DATE	BY	SUB	APP	DESCRIPTION
0	20130710				READINESS FOR CONSTRUCTION

DESIGNED BY J. REBER, S.E.
DRAWN BY P. DIAZ
CHECKED BY M. TARAZI
IN CHARGE M. TARAZI
DATE 20130710

REGISTERED PROFESSIONAL ENGINEER SOHAIL FUAD TARAZI S-5185 EXP.6/30/14 STRUCTURAL STATE OF CALIFORNIA

Skanska Shimmick Herzog
1436 California Circle
Milpitas, California 95035
A Joint Venture

MFT Consulting Engineers, Inc. Anil Verma Associates, Inc.
1773 San Pablo Ave., Suite A3 (510) 222-4106
Pinole, CA 94564 Fax (510) 222-4116

Lockwood, Andrews & Newnam, Inc. A LEO A DALY COMPANY
T·Y·LIN INTERNATIONAL

SUBMITTED _____
APPROVED _____

BART SILICON VALLEY
BART SILICON VALLEY BERRYESSA EXTENSION

LINE, TRACK, STATIONS AND SYSTEMS
DESIGN UNIT 023
MILPITAS STATION
STEEL BRACED FRAME
ELEVATIONS & DETAILS
SHEET 9 OF 11

CADD FILENAME C700–S–DB–S509.dwg
SIZE D | SCALE 1" = 1"–0"
CONTRACT NO. C700 | REV. 0
AREA CODE DB | SHEET NO. S509 | PAGE NO. 0204

cad–02 Jul 05, 2013 – 1:53pm P:\BART Berryessa Extension Line\S – STRUCTURAL MILPITAS\WORK_6-10-2012\C700-S-DB-S509.dwg

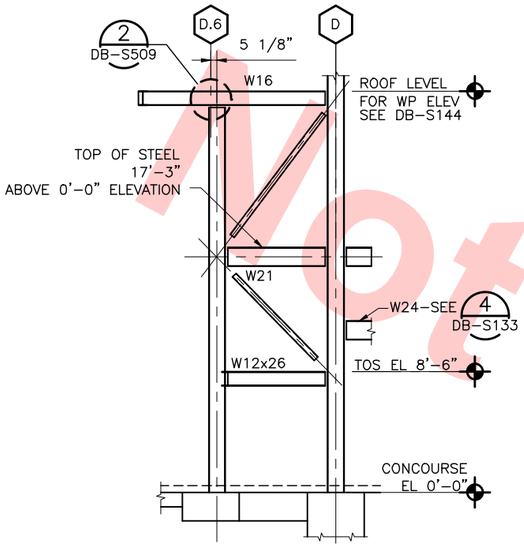

ELEVATION @ GRID 11 — 2 DB-S510

SCALE: 3/16"=1'-0"

DB-S125
DB-S132
DB-S149

Not For Construction

Santa Clara Valley Transportation Authority

____NO EXCEPTIONS TAKEN (NET)
____MAKE CORRECTIONS NOTED (MCN)
____AMEND AND RESUBMIT (A/R)

Any action shown above is subject to the terms of the contract and does not relieve the Contractor of any of its obligations under the contract, including design and detailing.

Contract No.: DB11002F

By: _____ Date: _____

REV	DATE	BY	SUB	APP	DESCRIPTION
0	20130710				READINESS FOR CONSTRUCTION

DESIGNED BY J. REBER, S.E.
DRAWN BY P. DIAZ
CHECKED BY M. TARAZI
IN CHARGE M. TARAZI
DATE 20130710

REGISTERED PROFESSIONAL ENGINEER — SONAM FUAD — S-3185 — EXP. 6/30/14 — STRUCTURAL — STATE OF CALIFORNIA

Skanska Shimmick Herzog
1436 California Circle
Milpitas, California 95035
A Joint Venture

MFT Consulting Engineers, Inc. — Anil Verma Associates, Inc.
1773 San Pablo Ave., Suite A3 (510) 222-4106
Pinole, CA 94564 Fax (510) 222-4118

SUBMITTED

Lockwood, Andrews & Newnam, Inc. — A LINA A. RALY COMPANY — T-Y-LIN INTERNATIONAL

APPROVED

VTA BART SILICON VALLEY

BART SILICON VALLEY BERRYESSA EXTENSION

LINE, TRACK, STATIONS AND SYSTEMS
DESIGN UNIT 023
MILPITAS STATION
STEEL BRACED FRAME
ELEVATIONS & DETAILS
SHEET 10 OF 11

CADD FILENAME C700-S-DB-S510.dwg
SIZE D | SCALE AS NOTED
CONTRACT NO. C700 | REV. 0
AREA CODE DB | SHEET NO. S510 | PAGE NO. 0205

cad-02 Jul 05, 2013 – 1:53pm P:\BART Berryessa Extension Line\S – STRUCTURAL MILPITAS\WORK_6-10-2012\C700-S-DB-S510.dwg

Not For Construction

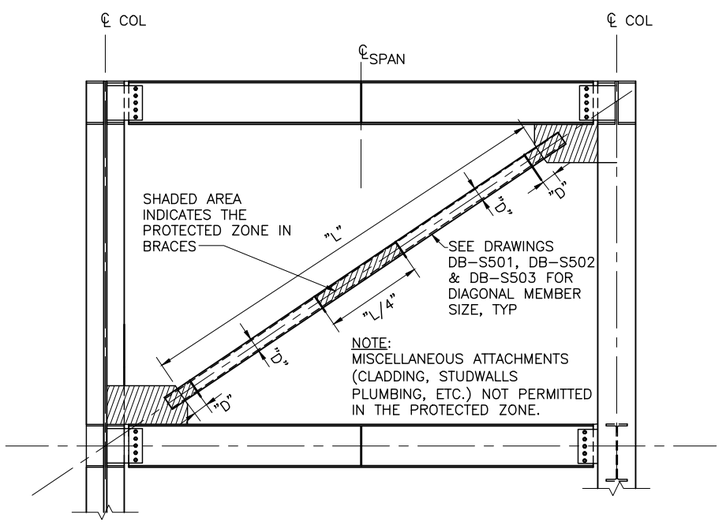

PROTECTED ZONE IN BRACES

SCALE: 1"=1'-0"

5 DB–S511

DB–S501

Santa Clara Valley Transportation Authority

____NO EXCEPTIONS TAKEN (NET)
____MAKE CORRECTIONS NOTED (MCN)
____AMEND AND RESUBMIT (A/R)

Any action shown above is subject to the terms of the contract and does not relieve the Contractor of any of its obligations under the contract, including design and detailing.

Contract No.: DB11002F

By: _____ Date: _____

REV	DATE	BY	SUB	APP	DESCRIPTION
0	20130710				READINESS FOR CONSTRUCTION

DESIGNED BY J. REBER, S.E.
DRAWN BY P. DIAZ
CHECKED BY M. TARAZI
IN CHARGE M. TARAZI
DATE 20130710

REGISTERED PROFESSIONAL ENGINEER SOHAIL FUAD VERMA # S-3185 EXP. 6/30/14 STRUCTURAL STATE OF CALIFORNIA

Skanska Shimmick Herzog
1436 California Circle
Milpitas, California 95035
A Joint Venture

MFT CONSULTING ENGINEERS, INC. Anil Verma Associates, Inc.
1773 San Pablo Ave., Suite A3 (510) 222-4106
Pinole, CA 94564 Fax: (510) 222-4118

SUBMITTED

Lockwood, Andrews & Newnam, Inc. A LAN & BALY COMPANY
T-Y-LIN INTERNATIONAL

APPROVED

BART SILICON VALLEY

BART SILICON VALLEY BERRYESSA EXTENSION

LINE, TRACK, STATIONS AND SYSTEMS DESIGN UNIT 023
MILPITAS STATION
STEEL BRACED FRAME
ELEVATIONS & DETAILS
SHEET 11 OF 11

CADD FILENAME C700–S–DB–S511.dwg
SIZE D | SCALE AS NOTED
CONTRACT NO. C700 | REV. 0
AREA CODE DB | SHEET NO. S511 | PAGE NO. 0206

cad–02 Jul 05, 2013 – 1:54pm P:\BART Berryessa Extension Line\S – STRUCTURAL MILPITAS\WORK_6–10–2012\C700–S–DB–S511.dwg

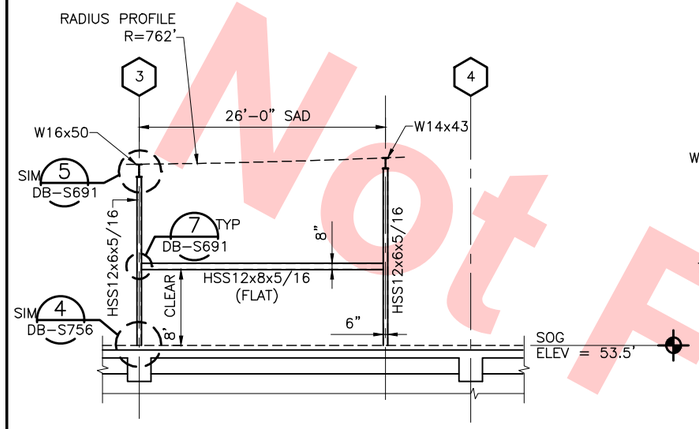

STEEL FRAME ELEVATION @ SMOKE VENT ROOM #1 & #2

SCALE: 1/8"=1'-0"

1 DB-S520 DB-S121

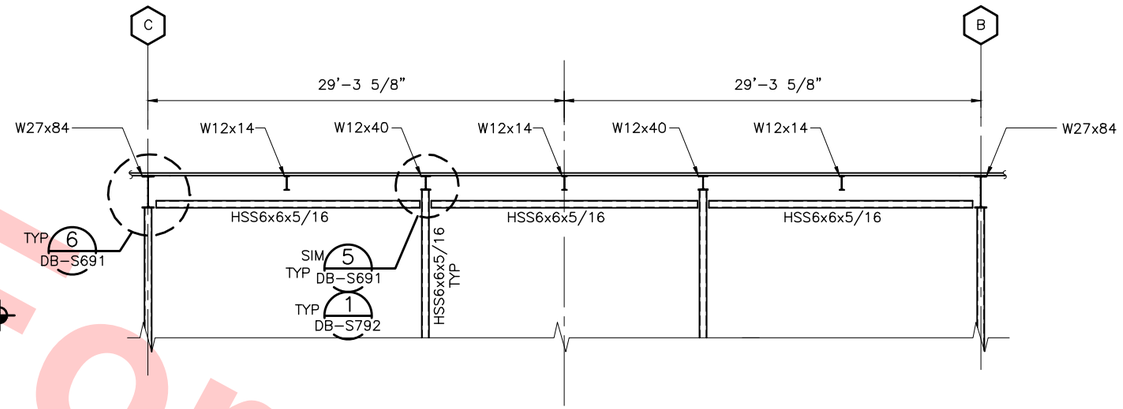

STEEL FRAME ELEVATION

SCALE: 3/16"=1'-0"

2 DB-S520 DB-S146

Santa Clara Valley Transportation Authority

____NO EXCEPTIONS TAKEN (NET)
____MAKE CORRECTIONS NOTED (MCN)
____AMEND AND RESUBMIT (A/R)

Any action shown above is subject to the terms of the contract and does not relieve the Contractor of any of its obligations under the contract, including design and detailing.

Contract No.: DB11002F

By: _____ Date: _____

Not For Construction

REV	DATE	BY	SUB	APP	DESCRIPTION
0	20130710				READINESS FOR CONSTRUCTION

DESIGNED BY J. REBER, S.E.
DRAWN BY P. DIAZ
CHECKED BY M. TARAZI
IN CHARGE M. TARAZI
DATE 20130710

REGISTERED PROFESSIONAL ENGINEER SOHAN FUAD VERMA # S-3185 EXP. 6/30/14 STRUCTURAL STATE OF CALIFORNIA

Skanska Shimmick Herzog
1436 California Circle
Milpitas, California 95035
A Joint Venture

MFT CONSULTING ENGINEERS, INC. Anil Verma Associates, Inc.
1773 San Pablo Ave., Suite A3 (510) 222-4106
Pinole, CA 94564 Fax (510) 222-4118

SUBMITTED

Lockwood, Andrews & Newnam, Inc. A LEO A DALY COMPANY
T-Y-LIN INTERNATIONAL

APPROVED

BART SILICON VALLEY BERRYESSA EXTENSION

LINE, TRACK, STATIONS AND SYSTEMS DESIGN UNIT 023
MILPITAS STATION
MISCELANEOUS STEEL FRAME AND DETAILS
SHEET 1 OF 1

CADD FILENAME C700-S-DB-S520.dwg
SIZE D | SCALE AS NOTED
CONTRACT NO. C700 | REV. 0
AREA CODE DB | SHEET NO. S520 | PAGE NO. 0207

cad-02 Jul 05, 2013 - 1:54pm P:\BART Berryessa Extension Line\S - STRUCTURAL MILPITAS\WORK_6-10-2012\C700-S-DB-S520.dwg

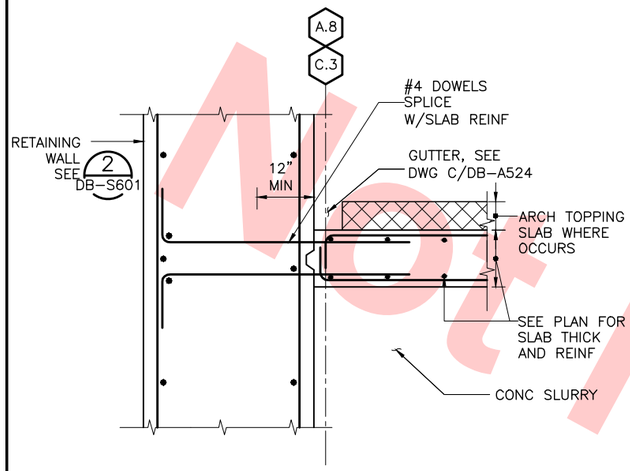

DETAIL 1 DB-S601 — DB-S212, DB-S215
SCALE: 3/4"=1'-0"

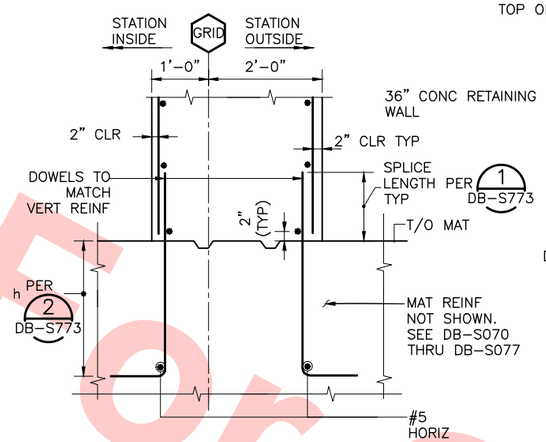

SECTION 2 DB-S601 — DB-S213, DB-S214, DB-S216, DB-S602, DB-S603
SCALE: 3/4"=1'-0"

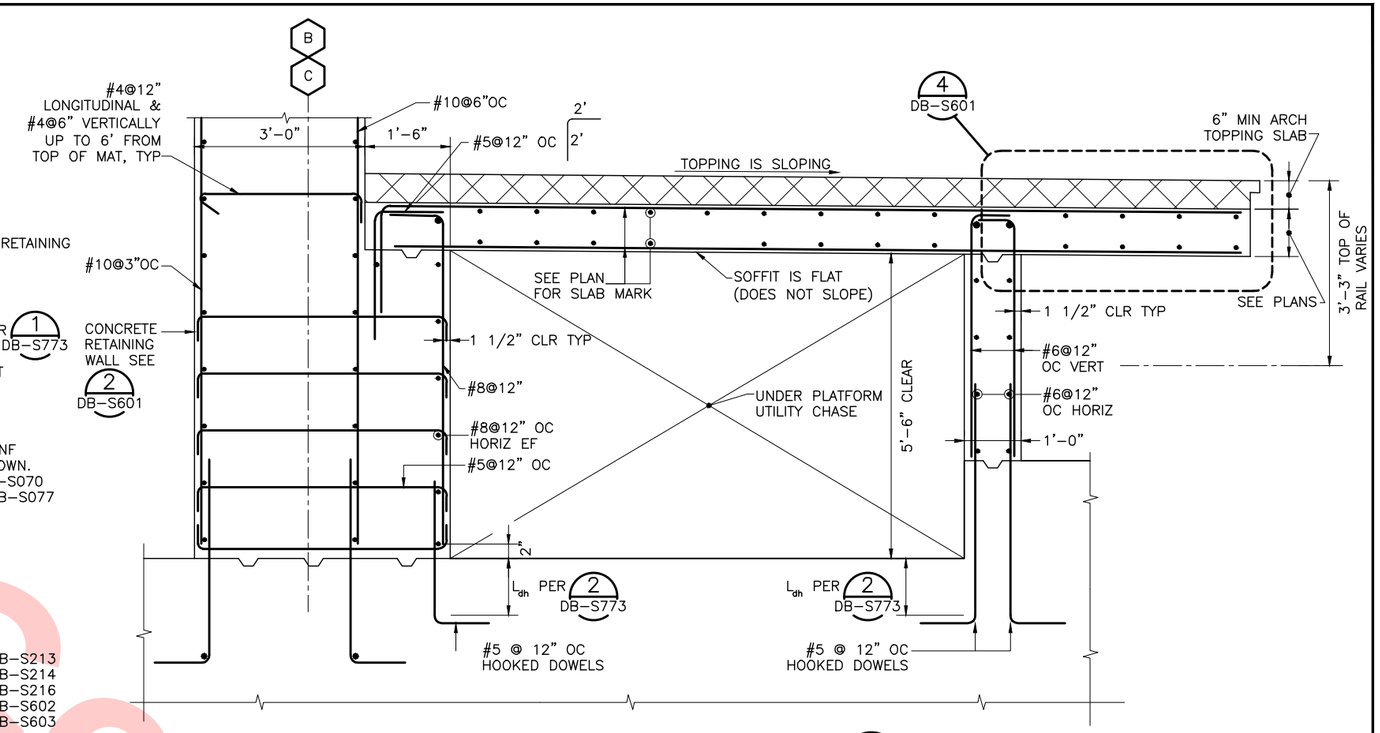

DETAIL 3 DB-S601 — DB-S211, DB-S212, DB-S213, DB-S214, DB-S602, DB-S603
SCALE: 3/4"=1'-0"

FOR REFERENCE ONLY AND NOT FOR REVIEW.
THIS DRAWING WAS SUBMITTED UNDER
DU-23-WP08 TRENCH PACKAGE

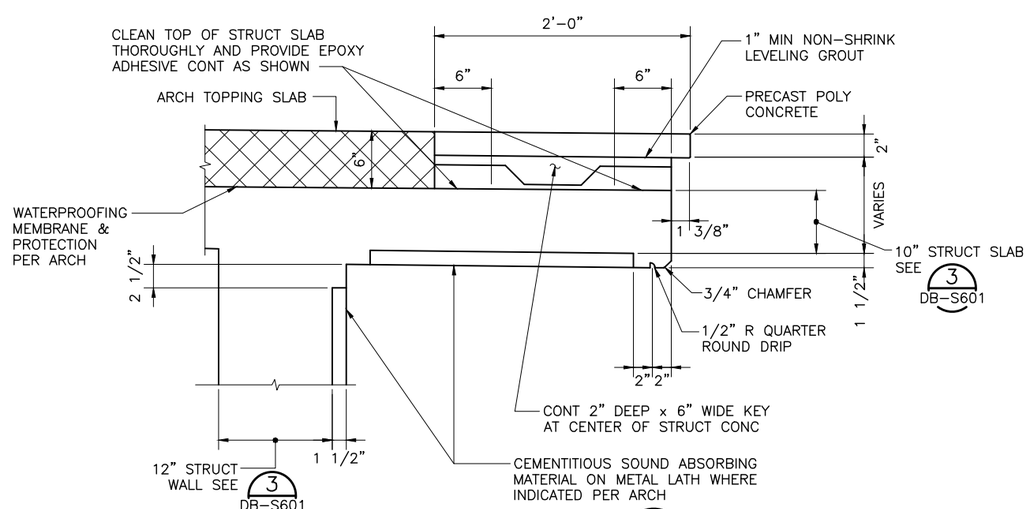

DETAIL 4 DB-S601
SCALE: 1 1/2"=1'-0"

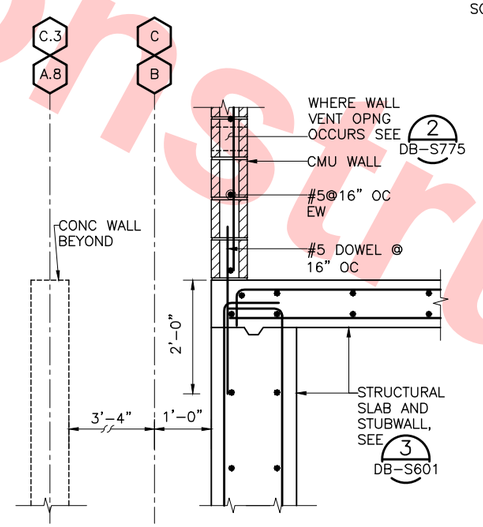

SECTION 5 DB-S601 — DB-S111, DB-S214, DB-S603, DB-S641
SCALE: 3/4"=1'-0"

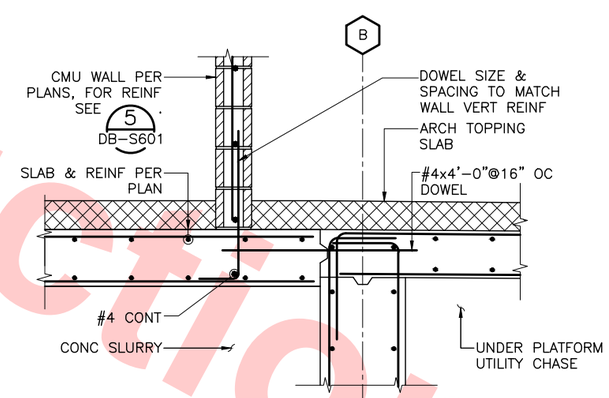

SECTION 6 DB-S601 — DB-S112, DB-S212
SCALE: 3/4"=1'-0"

Not For Construction

REV	DATE	BY	SUB	APP	DESCRIPTION
0	20130531				READINESS FOR CONSTRUCTION

DESIGNED BY J. REBER, S.E.
DRAWN BY P. DIAZ
CHECKED BY M. TARAZI
IN CHARGE M. TARAZI
DATE 20130531

REGISTERED PROFESSIONAL ENGINEER NOMAN FUAD TARAZI # S 3185 EXP. 6/30/14 STRUCTURAL STATE OF CALIFORNIA

Skanska Shimmick Herzog
1436 California Circle Milpitas, California 95035
A Joint Venture

MFT Consulting Engineers, Inc. Anil Verma Associates, Inc.
1773 San Pablo Ave., Suite A3 (510) 222-4106
Pinole, CA 94564 Fax (510) 222-6418

Lockwood, Andrews & Newnam, Inc. A LAN & MAY COMPANY | T-Y-LIN INTERNATIONAL

SUBMITTED _____ APPROVED _____

VTA BART SILICON VALLEY
BART SILICON VALLEY BERRYESSA EXTENSION

LINE, TRACK, STATIONS AND SYSTEMS
DESIGN UNIT 023
MILPITAS STATION
MAT AND PLATFORM FRAMING
SECTIONS AND DETAILS
SHEET 1 OF 4

CADD FILENAME C700-S-DB-S601.dwg
SIZE D | SCALE AS NOTED
CONTRACT NO. C700 | REV. 0
AREA CODE DB | SHEET NO. S601 | PAGE NO. 0208

cad-02 Jul 05, 2013 - 1:54pm P:\BART Berryessa Extension Line\S - STRUCTURAL MILPITAS\WORK_6-10-2012\C700-S-DB-S601.dwg

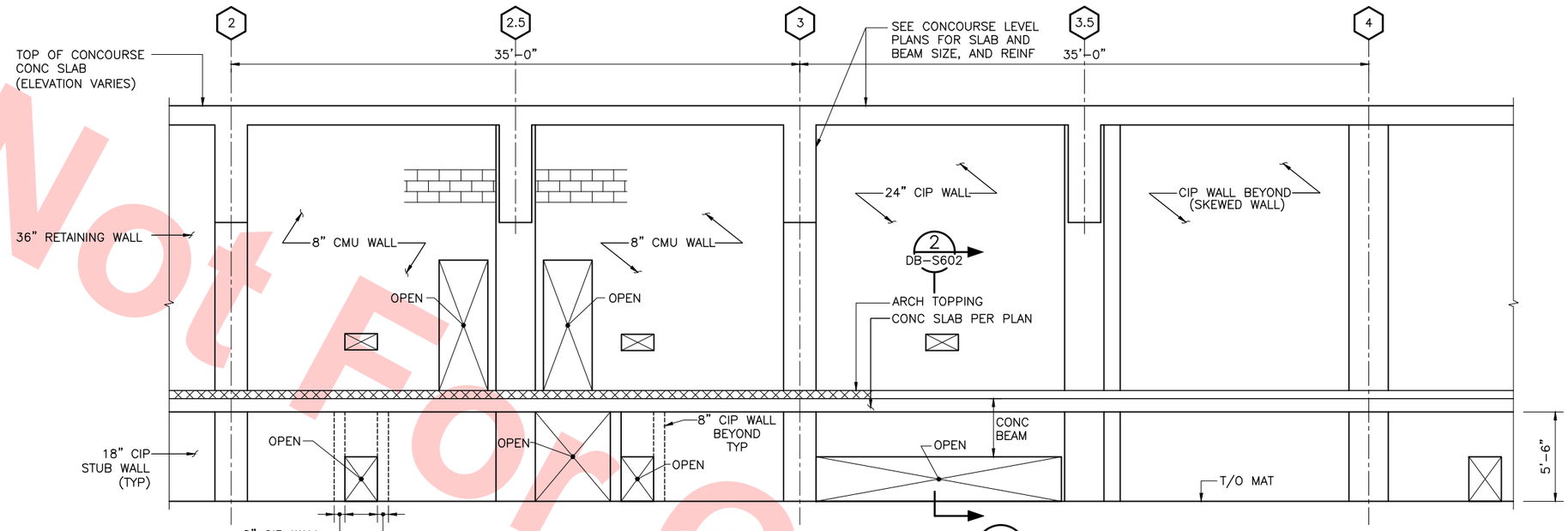

SECTION 1 DB-S602 DB-S071 DB-S111
SCALE: 1/4"=1'-0"

Not For Construction

FOR REFERENCE ONLY AND NOT FOR REVIEW.
THIS DRAWING WAS SUBMITTED UNDER
DU-23-WP08 TRENCH PACKAGE

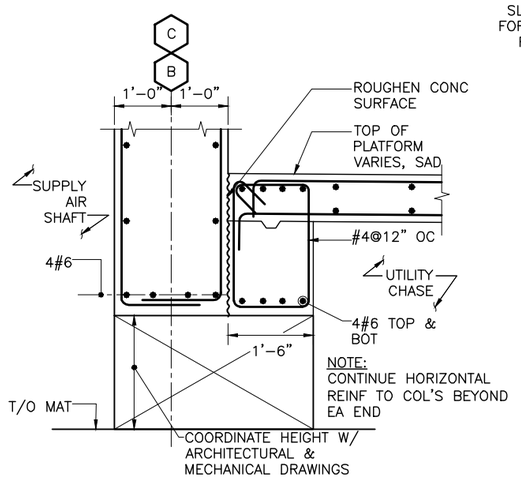

SECTION 2 DB-S602 DB-S071 DB-S111 DB-S601 DB-S754
SCALE: 3/4"=1'-0"

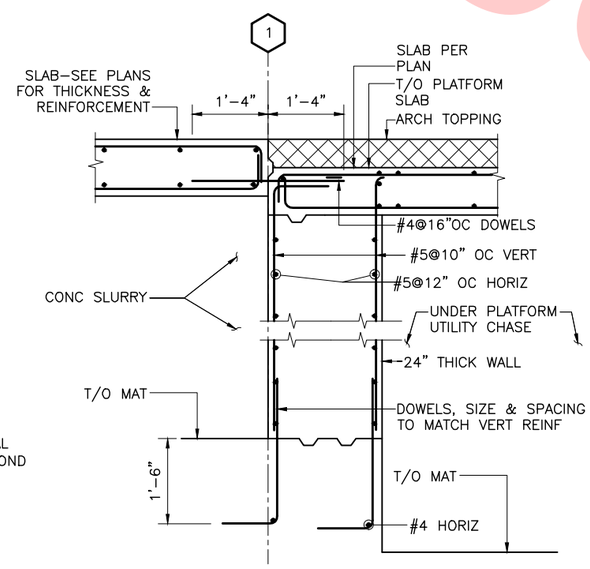

SECTION 3 DB-S602 DB-S076 DB-S111 DB-S603
SCALE: 3/4"=1'-0"

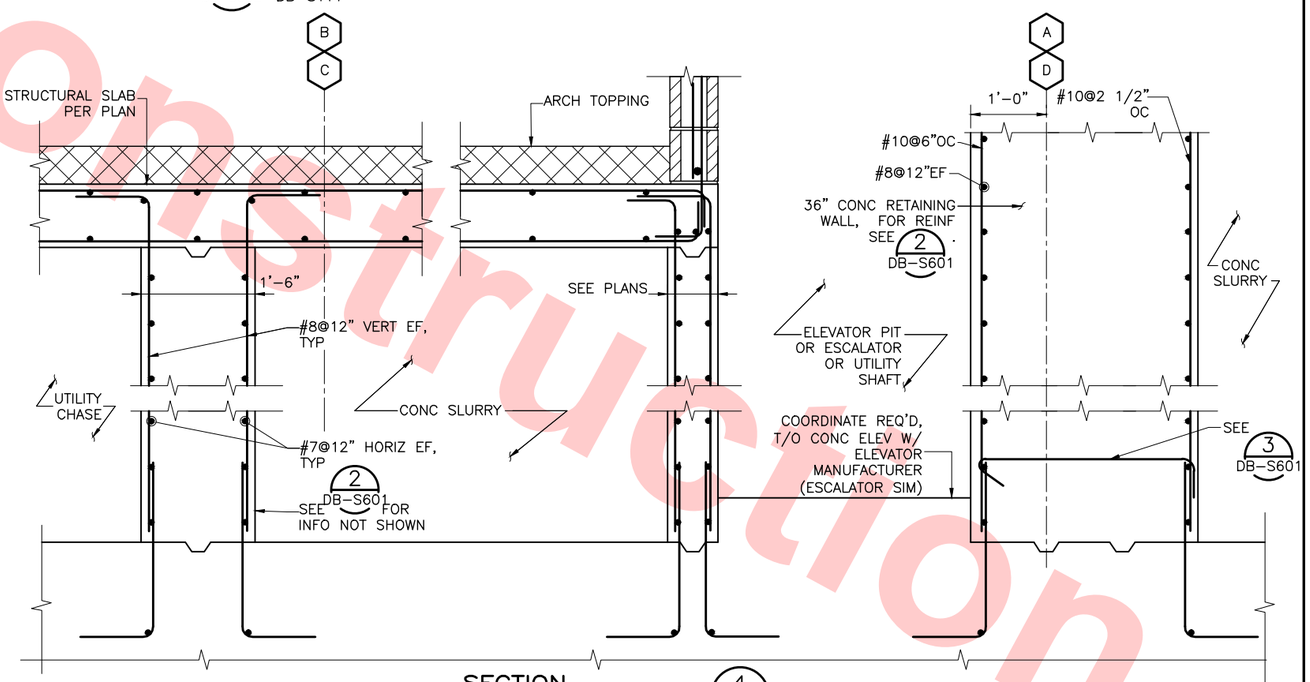

SECTION 4 DB-S602 DB-S071 DB-S072 DB-S112
SCALE: 1"=1'-0"

REV	DATE	BY	SUB	APP	DESCRIPTION
0	20130531				READINESS FOR CONSTRUCTION

DESIGNED BY J. REBER, S.E.
DRAWN BY P. DIAZ
CHECKED BY M. TARAZI
IN CHARGE M. TARAZI
DATE 20130531

REGISTERED PROFESSIONAL ENGINEER NUMAN FUAD TARAZI # S 3185 EXP. 6/30/14 STRUCTURAL STATE OF CALIFORNIA

Skanska Shimmick Herzog
1436 California Circle Milpitas, California 95035
A Joint Venture

MFT Consulting Engineers, Inc. Anil Verma Associates, Inc. 1773 San Pablo Ave., Suite A3 (510) 222-4106 Pinole, CA 94564 Fax (510) 222-6418
Lockwood, Andrews & Newnam, Inc. A LEO A DALY COMPANY
T-Y-LIN INTERNATIONAL

SUBMITTED _____
APPROVED _____

VTA. BART SILICON VALLEY
BART SILICON VALLEY BERRYESSA EXTENSION

LINE, TRACK, STATIONS AND SYSTEMS
DESIGN UNIT 023
MILPITAS STATION
MAT AND PLATFORM FRAMING
SECTIONS AND DETAILS
SHEET 2 OF 4

CADD FILENAME C700-S-DB-S602.dwg
SIZE D | SCALE AS NOTED
CONTRACT NO. C700 | REV. 0
AREA CODE DB | SHEET NO. S602 | PAGE NO. 0209

cad-02 Jul 05, 2013 - 1:54pm P:\BART Berryessa Extension Line\S - STRUCTURAL MILPITAS\WORK_6-10-2012\C700-S-DB-S602.dwg

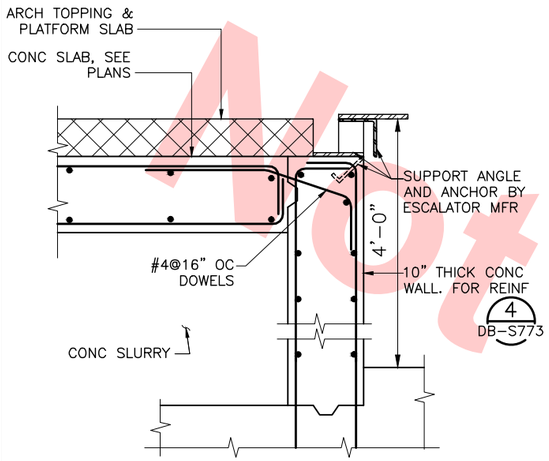

SECTION 1 DB-S603
SCALE: 1"=1'-0"
DB-S072 DB-S074 DB-S112 DB-S114

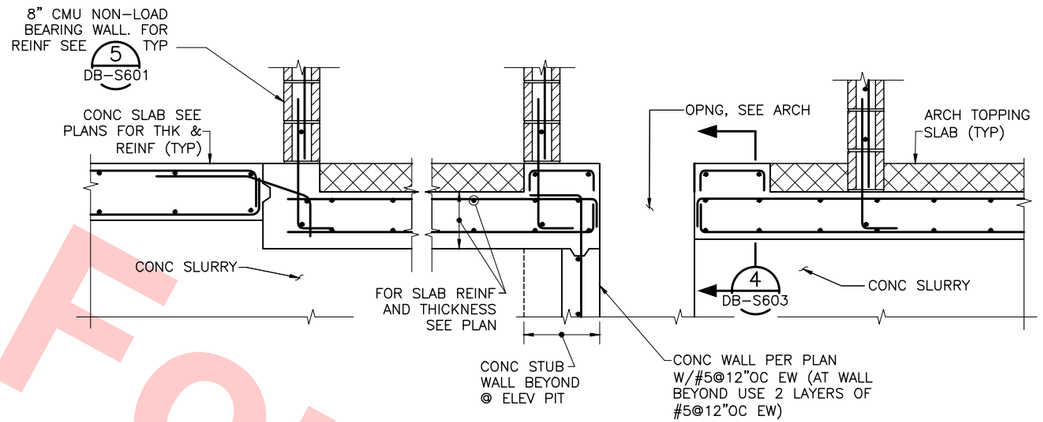

SECTION 2 DB-S603
SCALE: 3/4"=1'-0"
DB-S112

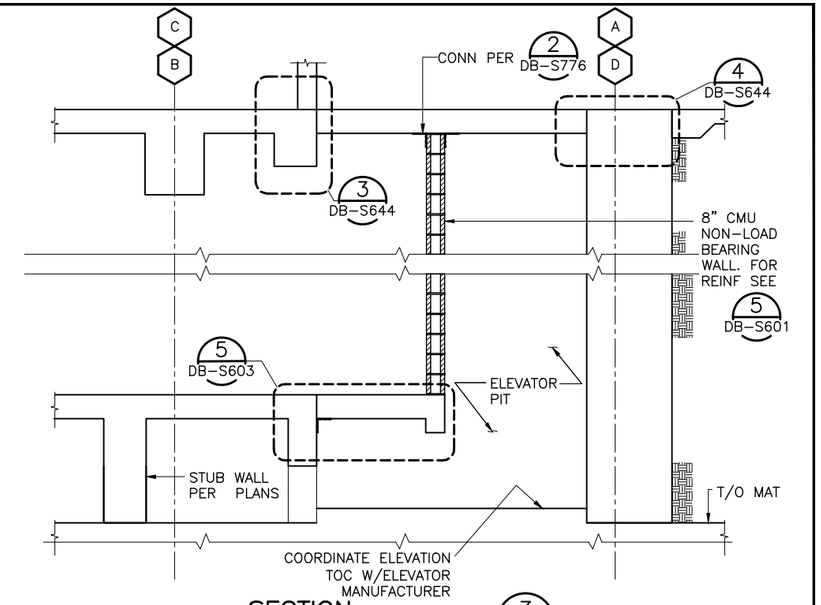

SECTION 3 DB-S603
SCALE: 3/8"=1'-0"
DB-S073 DB-S113

FOR REFERENCE ONLY AND NOT FOR REVIEW.
THIS DRAWING WAS SUBMITTED UNDER
DU-23-WP08 TRENCH PACKAGE

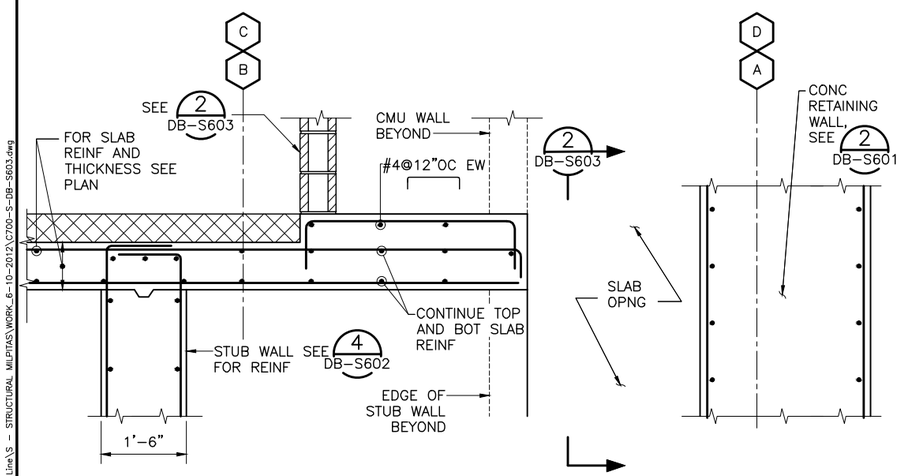

SECTION 4 DB-S603
SCALE: 3/4"=1'-0"
DB-S112 DB-S113 DB-S603

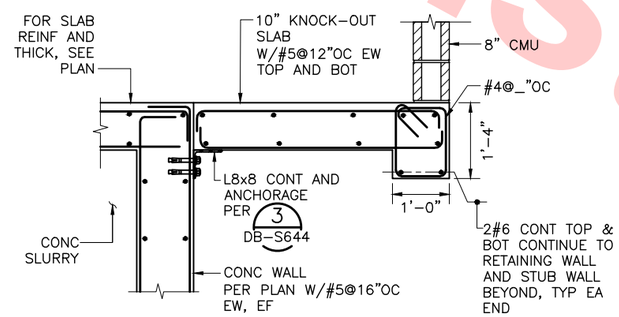

SECTION 5 DB-S603
SCALE: 3/4"=1'-0"
DB-S603

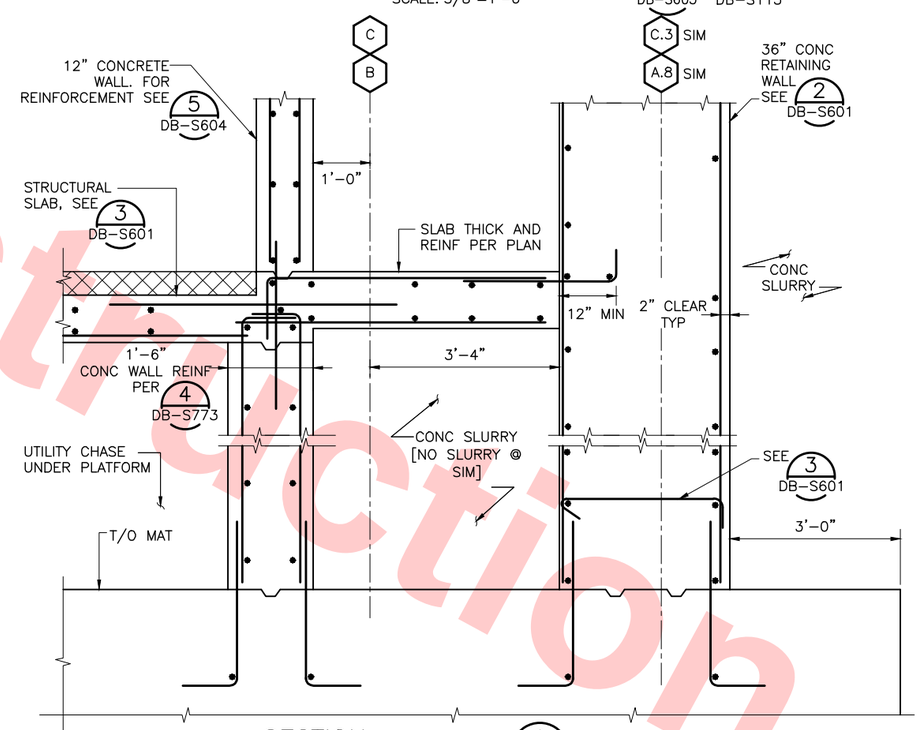

SECTION 6 DB-S603
SCALE: 3/4"=1'-0"
DB-S071 DB-S076 DB-S111 DB-S116

Not For Construction

REV	DATE	BY	SUB	APP	DESCRIPTION
0	20130531				READINESS FOR CONSTRUCTION

DESIGNED BY J. REBER, S.E.
DRAWN BY P. DIAZ
CHECKED BY M. TARAZI
IN CHARGE M. TARAZI
DATE 20130531

REGISTERED PROFESSIONAL ENGINEER SUHAIL FUAD TARAZI # S 3185 EXP. 6/30/14 STRUCTURAL STATE OF CALIFORNIA

Skanska Shimmick Herzog
1436 California Circle Milpitas, California 95035
A Joint Venture

MFT Consulting Engineers, Inc. Anil Verma Associates, Inc. 1773 San Pablo Ave., Suite A3 Pinole, CA 94564 (510) 222-4106 Fax (510) 222-6418
Lockwood, Andrews & Newnam, Inc. A LEIGHTON & BALY COMPANY
T-Y-LIN INTERNATIONAL

SUBMITTED
APPROVED

VTA BART SILICON VALLEY
BART SILICON VALLEY BERRYESSA EXTENSION

LINE, TRACK, STATIONS AND SYSTEMS
DESIGN UNIT 023
MILPITAS STATION
MAT AND PLATFORM FRAMING
SECTIONS AND DETAILS
SHEET 3 OF 4

CADD FILENAME C700-S-DB-S603.dwg
SIZE D | SCALE AS NOTED
CONTRACT NO. C700 | REV. 0
AREA CODE DB | SHEET NO. S603 | PAGE NO. 0210

cad-02 Jul 05, 2013 - 1:54pm P:\BART Berryessa Extension Line\S - STRUCTURAL MILPITAS\WORK_6-10-2012\C700-S-DB-S603.dwg

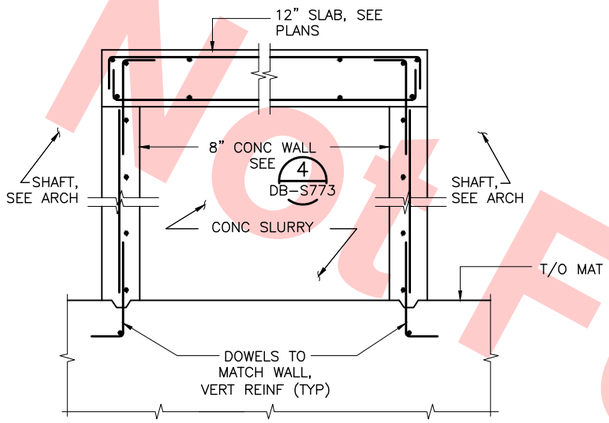

DETAIL 1 DB-S604 DB-S071 DB-S111
SCALE: 3/4"=1'-0"

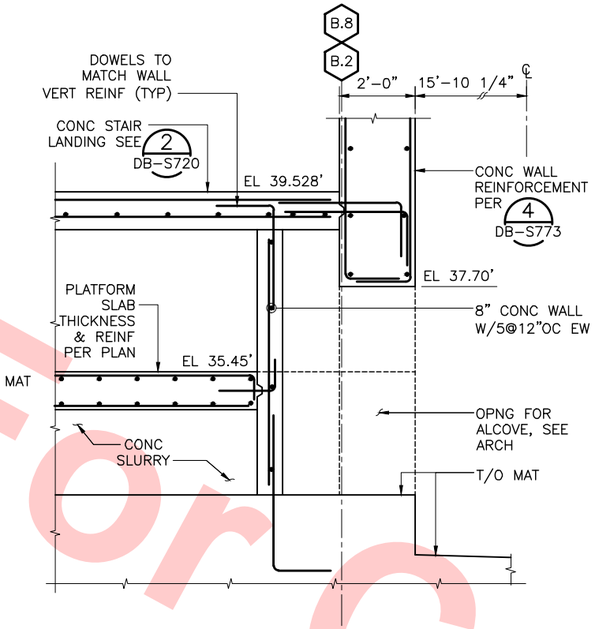

DETAIL 2 DB-S604 DB-S071 DB-S111 DB-S201X DB-S720
SCALE: 1/2"=1'-0"

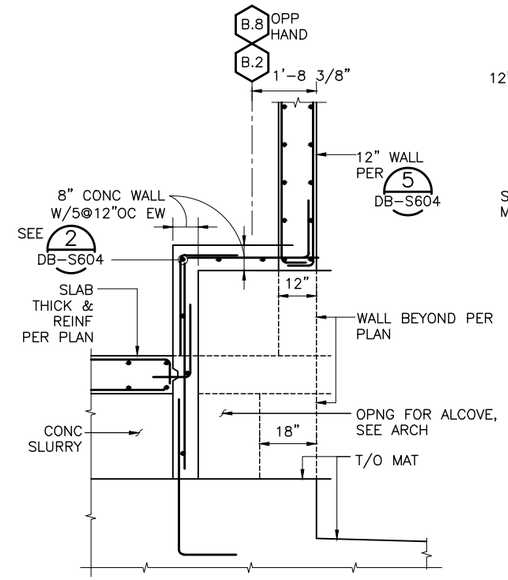

DETAIL 3 DB-S604 DB-S076 DB-S116 DB-S206X
SCALE: 1/2"=1'-0"

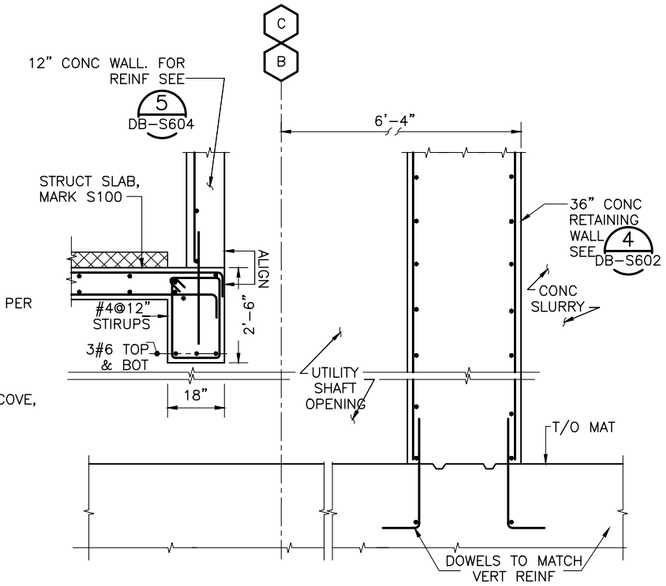

DETAIL 4 DB-S604 DB-S076 DB-S116
SCALE: 1/2"=1'-0"

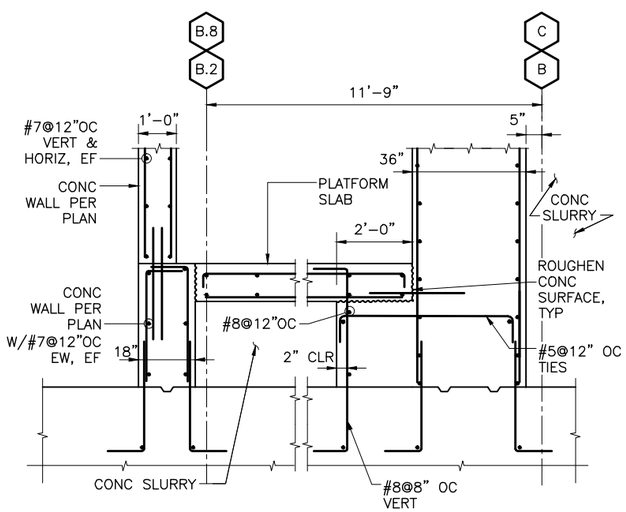

SECTION 5 DB-S604 DB-S076 DB-S116
SCALE: 1/2"=1'-0"

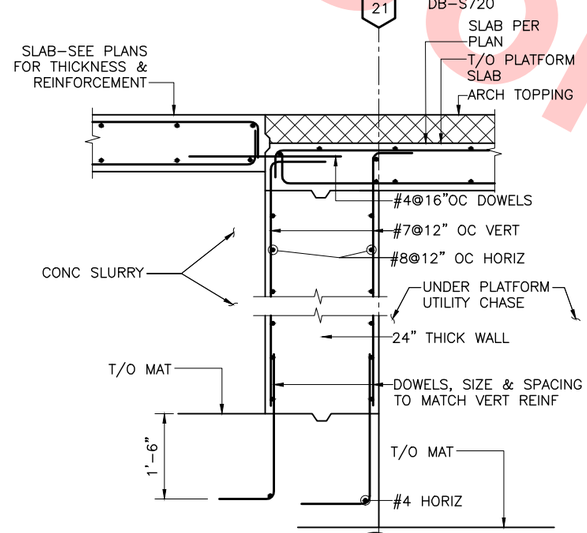

SECTION 6 DB-S604 DB-S111 DB-S116
SCALE: 1/2"=1'-0"

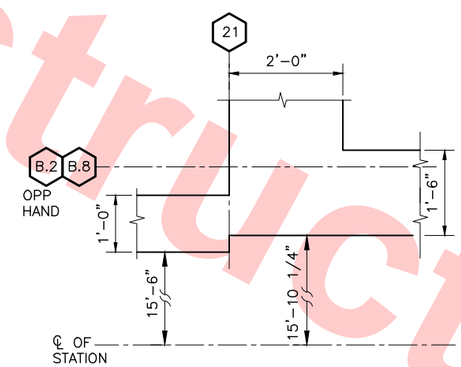

PLAN DETAIL 7 DB-S076
SCALE: 3/4"=1'-0"

FOR REFERENCE ONLY AND NOT FOR REVIEW.
THIS DRAWING WAS SUBMITTED UNDER
DU-23-WP08 TRENCH PACKAGE

Not For Construction

REV	DATE	BY	SUB	APP	DESCRIPTION
0	20130531				READINESS FOR CONSTRUCTION

DESIGNED BY J. REBER, S.E.
DRAWN BY P. DIAZ
CHECKED BY M. TARAZI
IN CHARGE M. TARAZI
DATE 20130531

REGISTERED PROFESSIONAL ENGINEER SUMAN FUAD TARAZI # S 3185 EXP. 6/30/14 STRUCTURAL STATE OF CALIFORNIA

Skanska Shimmick Herzog
1436 California Circle
Milpitas, California 95035
A Joint Venture

MFT Consulting Engineers, Inc. Anil Verma Associates, Inc.
1773 San Pablo Ave., Suite A3 (510) 222-4106
Pinole, CA 94564 Fax (510) 222-6418

Lockwood, Andrews & Newnam, Inc. A LEO A DALY COMPANY
T-Y-LIN INTERNATIONAL

SUBMITTED
APPROVED

VTA BART SILICON VALLEY
BART SILICON VALLEY BERRYESSA EXTENSION

LINE, TRACK, STATIONS AND SYSTEMS
DESIGN UNIT 023
MILPITAS STATION
MAT AND PLATFORM FRAMING
SECTIONS AND DETAILS
SHEET 4 OF 4

CADD FILENAME C700-S-DB-S604.dwg
SIZE D | SCALE AS NOTED
CONTRACT NO. C700 | REV. 0
AREA CODE DB | SHEET NO. S604 | PAGE NO. 0211

cad-02 Jul 05, 2013 - 1:54pm P:\BART Berryessa Extension Line\S - STRUCTURAL MILPITAS\WORK_6-10-2012\C700-S-DB-S604.dwg

NOTES:

1. SEE DWGS DB–S001X, DB–S002X AND DB–S003X FOR NOTES.
2. SEE CIVIL DRAWINGS FOR STORM DRAIN.

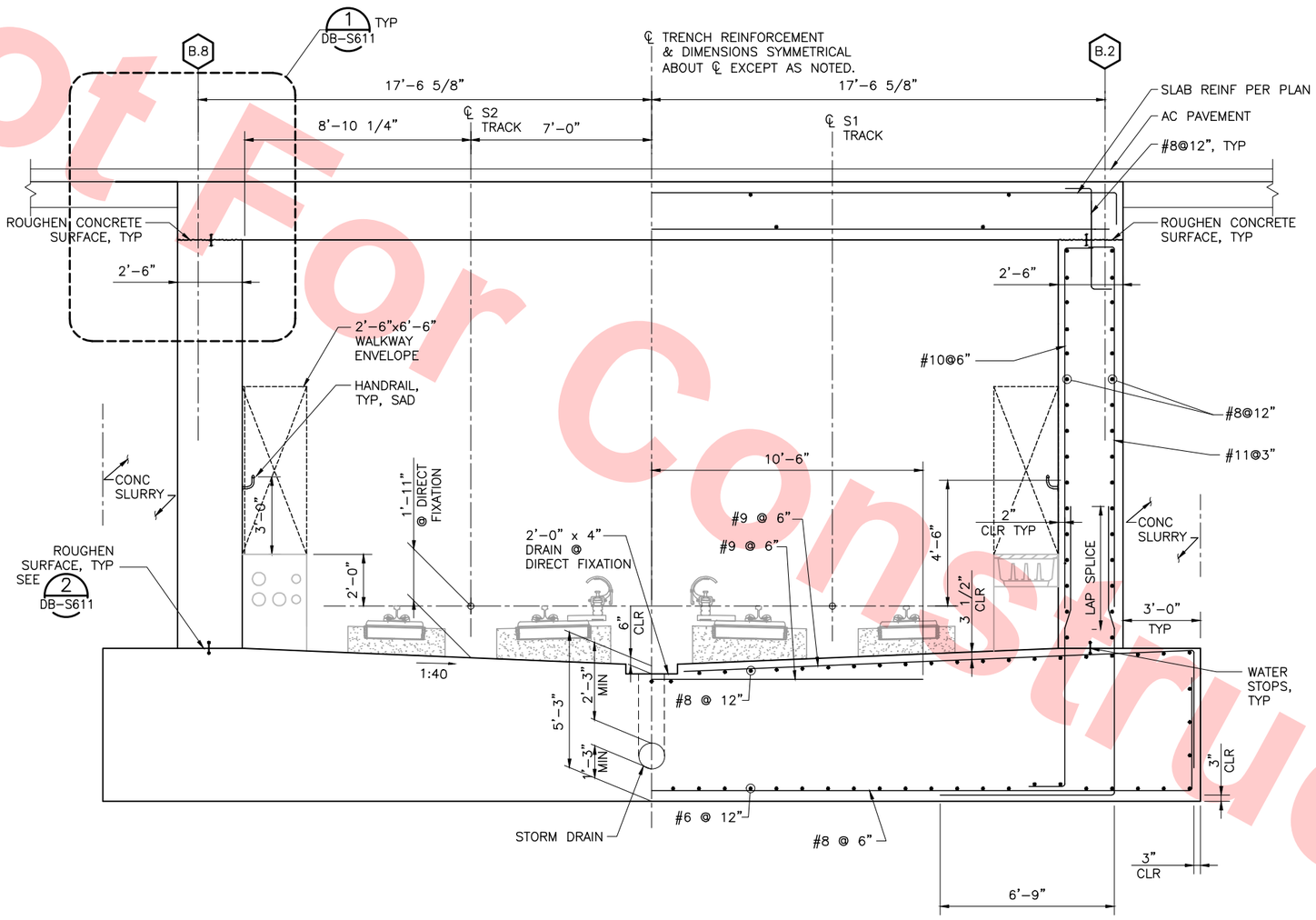

TYPICAL SECTION

SCALE: 3/8"=1'–0"

DB–S077
DB–S117
DB–S129

FOR REFERENCE ONLY AND NOT FOR REVIEW.
THIS DRAWING WAS SUBMITTED UNDER
DU-23-WP08 TRENCH PACKAGE

Not For Construction

REV	DATE	BY	SUB	APP	DESCRIPTION
0	20130531				READINESS FOR CONSTRUCTION

DESIGNED BY J. REBER, S.E.
DRAWN BY P. DIAZ
CHECKED BY M. TARAZI
IN CHARGE M. TARAZI
DATE 20130531

REGISTERED PROFESSIONAL ENGINEER HUMAN FUAD TARAZI # S 3185 EXP. 6/30/14 STRUCTURAL STATE OF CALIFORNIA

Skanska Shimmick Herzog
1436 California Circle
Milpitas, California 95035
A Joint Venture

MFT CONSULTING ENGINEERS, INC. Anil Verma Associates, Inc.
1773 San Pablo Ave., Suite A3 (510) 222-4106
Pinole, CA 94564 Fax (510) 222-6418

Lockwood, Andrews & Newnam, Inc. A LAN & BALY COMPANY | T·Y·LIN INTERNATIONAL

SUBMITTED _____ APPROVED _____

VTA BART SILICON VALLEY
BART SILICON VALLEY BERRYESSA EXTENSION

LINE, TRACK, STATIONS AND SYSTEMS
DESIGN UNIT 023
MILPITAS STATION
TYPICAL SECTION

SHEET 1 OF 1

CADD FILENAME C700–S–DB–S610.dwg
SIZE D | SCALE 3/8" = 1'–0"
CONTRACT NO. C700 | REV. 0
AREA CODE DB | SHEET NO. S610 | PAGE NO. 0212

cad–02 Jul 05, 2013 – 1:54pm P:\BART Berryessa Extension Line\S – STRUCTURAL MILPITAS\WORK_6–10–2012\C700–S–DB–S610.dwg

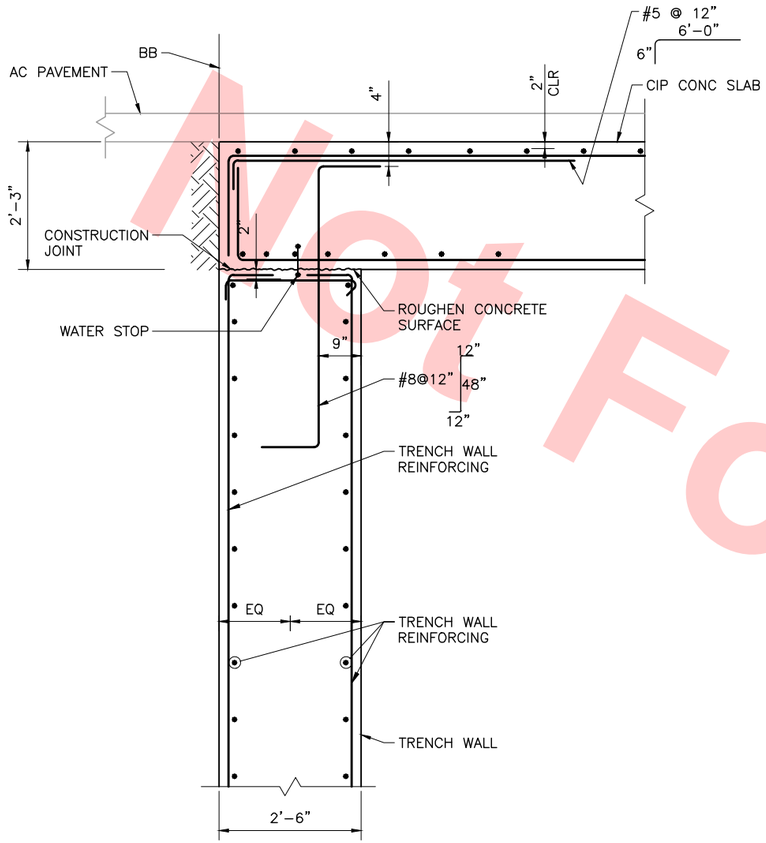

SECTION 1 DB-S611 DB-S610
SCALE: 3/4"=1'-0"

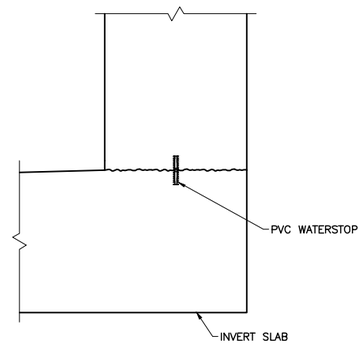

DETAIL 2 DB-S611 DB-S610
SCALE: NTS

Not For Construction

FOR REFERENCE ONLY AND NOT FOR REVIEW.
THIS DRAWING WAS SUBMITTED UNDER
DU-23-WP08 TRENCH PACKAGE

REV	DATE	BY	SUB	APP	DESCRIPTION
0	20130531				READINESS FOR CONSTRUCTION

DESIGNED BY J. REBER, S.E.
DRAWN BY P. DIAZ
CHECKED BY M. TARAZI
IN CHARGE M. TARAZI
DATE 20130531

REGISTERED PROFESSIONAL ENGINEER HUMAN FUAD TARAZI # S 3185 EXP. 6/30/14 STRUCTURAL STATE OF CALIFORNIA

Skanska Shimmick Herzog
1436 California Circle
Milpitas, California 95035
A Joint Venture

MFT Consulting Engineers, Inc. Anil Verma Associates, Inc.
1773 San Pablo Ave., Suite A3 (510) 222-4106
Pinole, CA 94564 Fax (510) 222-6418

Lockwood, Andrews & Newnam, Inc. A LAN & BALY COMPANY
T-Y-LIN INTERNATIONAL

SUBMITTED _____
APPROVED _____

VTA BART SILICON VALLEY
BART SILICON VALLEY BERRYESSA EXTENSION

LINE, TRACK, STATIONS AND SYSTEMS
DESIGN UNIT 023
MILPITAS STATION
TYPICAL SECTION
DETAILS
SHEET 1 OF 4

CADD FILENAME C700-S-DB-S611.dwg
SIZE D | SCALE AS NOTED
CONTRACT NO. C700 | REV. 0
AREA CODE DB | SHEET NO. S611 | PAGE NO. 0213

cad-02 Jul 05, 2013 - 1:54pm P:\BART Berryessa Extension Line\S - STRUCTURAL MILPITAS\WORK_6-10-2012\C700-S-DB-S611.dwg

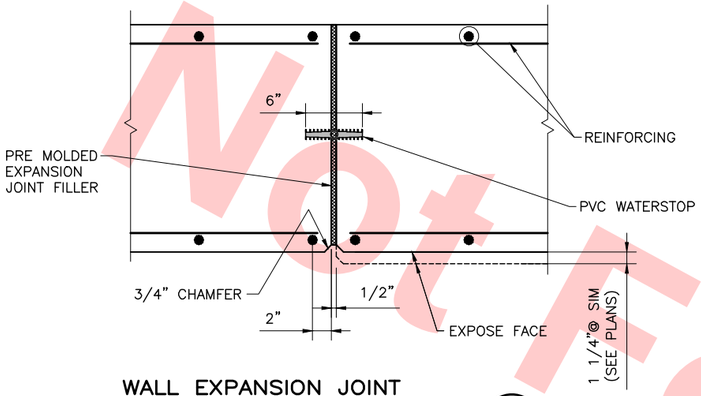

WALL EXPANSION JOINT DETAIL

SCALE: NTS

1 DB-S612

DB-S071
DB-S075
DB-S076
DB-S077
DB-S117

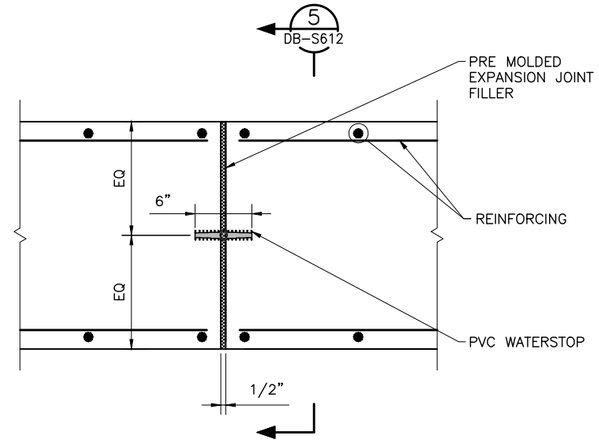

INVERT SLAB EXPANSION JOINT DETAIL

SCALE: NTS (SIM @ DECK SLAB)

2 DB-S612

DB-S076
DB-S129

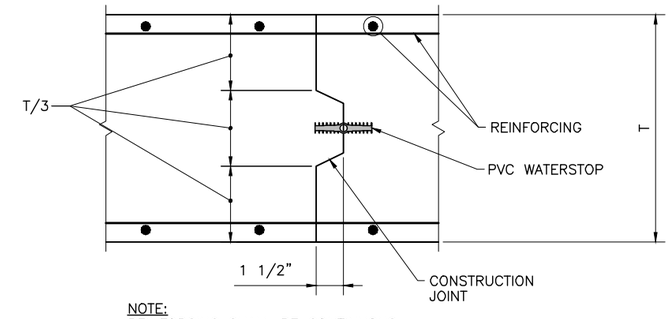

NOTE:
REINFORCING SHALL BE CONTINUOUS THRU CONSTRUCTION JOINT

WALL & INVERT SLAB CONSTRUCTION JOINT DETAIL

SCALE: NTS

3 DB-S612

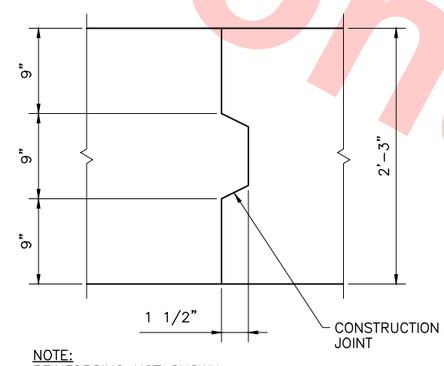

NOTE:
REINFORCING NOT SHOWN

DECK CONSTRUCTION JOINT DETAIL

SCALE: NTS

4 DB-S612

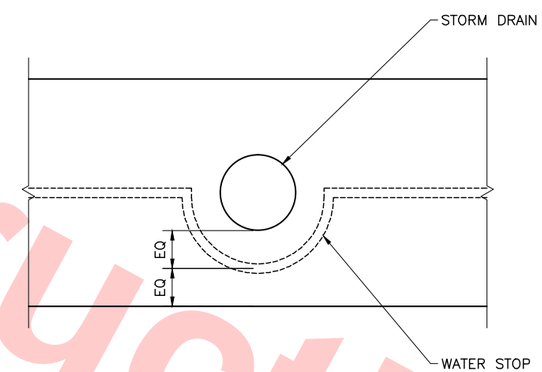

SECTION

SCALE: NTS

5 DB-S612

FOR REFERENCE ONLY AND NOT FOR REVIEW.
THIS DRAWING WAS SUBMITTED UNDER
DU-23-WP08 TRENCH PACKAGE

Not For Construction

REV	DATE	BY	SUB	APP	DESCRIPTION
0	20130531				READINESS FOR CONSTRUCTION

DESIGNED BY J. REBER, S.E.
DRAWN BY P. DIAZ
CHECKED BY M. TARAZI
IN CHARGE M. TARAZI
DATE 20130531

REGISTERED PROFESSIONAL ENGINEER NOMAN FUAD TARAZI # S 3185 EXP. 6/30/14 STRUCTURAL STATE OF CALIFORNIA

Skanska Shimmick Herzog
1436 California Circle
Milpitas, California 95035
A Joint Venture

MFT Consulting Engineers, Inc. Anil Verma Associates, Inc.
1773 San Pablo Ave., Suite A3 (510) 222-4106
Pinole, CA 94564 Fax (510) 222-6418

Lockwood, Andrews & Newnam, Inc. A LAN & RALY COMPANY | T-Y-LIN INTERNATIONAL

SUBMITTED _____ APPROVED _____

VTA. BART SILICON VALLEY
BART SILICON VALLEY BERRYESSA EXTENSION

LINE, TRACK, STATIONS AND SYSTEMS
DESIGN UNIT 023
MILPITAS STATION
TYPICAL SECTION
DETAILS
SHEET 2 OF 4

CADD FILENAME C700-S-DB-S612.dwg
SIZE D | SCALE NONE
CONTRACT NO. C700 | REV. 0
AREA CODE DB | SHEET NO. S612 | PAGE NO. 0214

cad-02 Jul 05, 2013 - 1:54pm P:\BART Berryessa Extension Line\S - STRUCTURAL MILPITAS\WORK_6-10-2012\C700-S-DB-S612.dwg

NOTES:

1. REFER TO ARCHITECTURAL DRAWINGS FOR LOCATIONS OF NICHES. SEE DWG DB–S614 FOR NICHES SIZES.

2. THE AREA OF THE ADDITIONAL VERTICAL REINFORCING AND THE ADDITIONAL HORIZONTAL REINFORCING SHALL NOT BE LESS THAN THE INTERRUPTED VERTICAL AND HORIZONTAL REINFORCING. RESPECTIVELY, ADDITIONAL REINFORCING SHALL BE DISTRIBUTED WITHIN THE DISTANCE SHOWN IN THE DETAILS

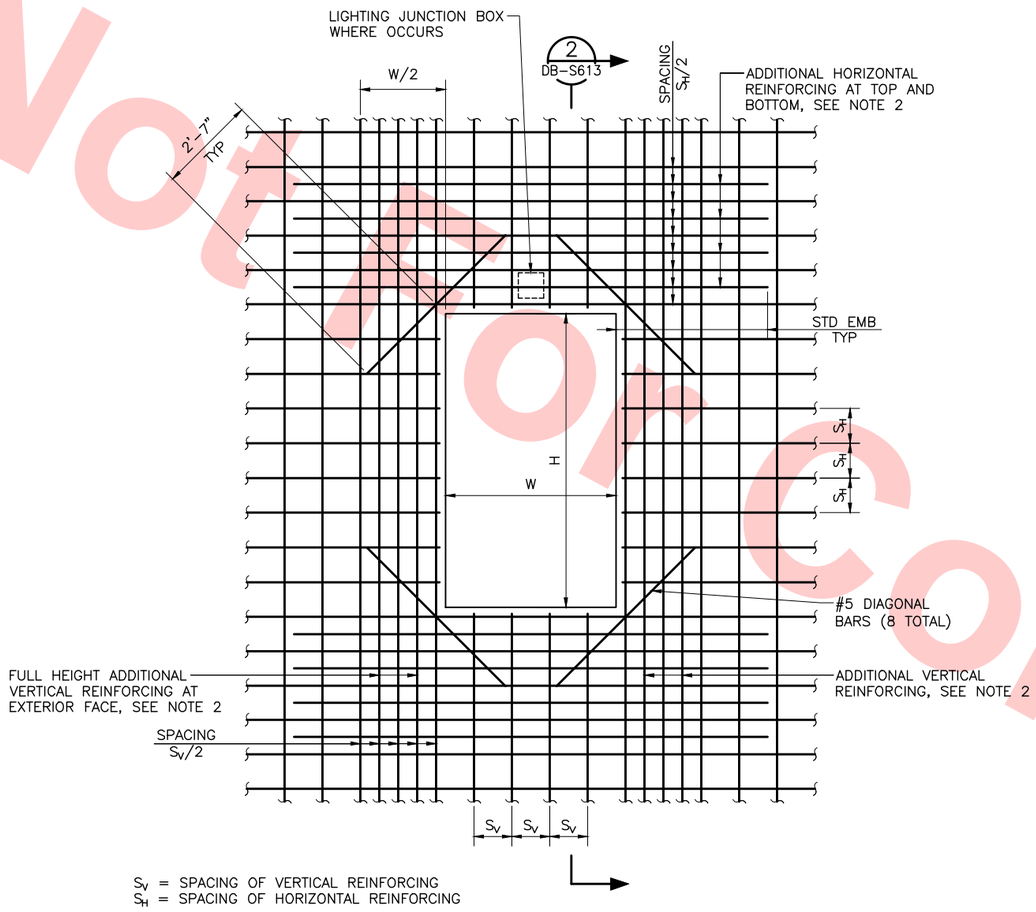

ADDITIONAL REINFORCEMENT AT NICHES (1 / DB–S613)
SCALE: 1/2"=1'–0"

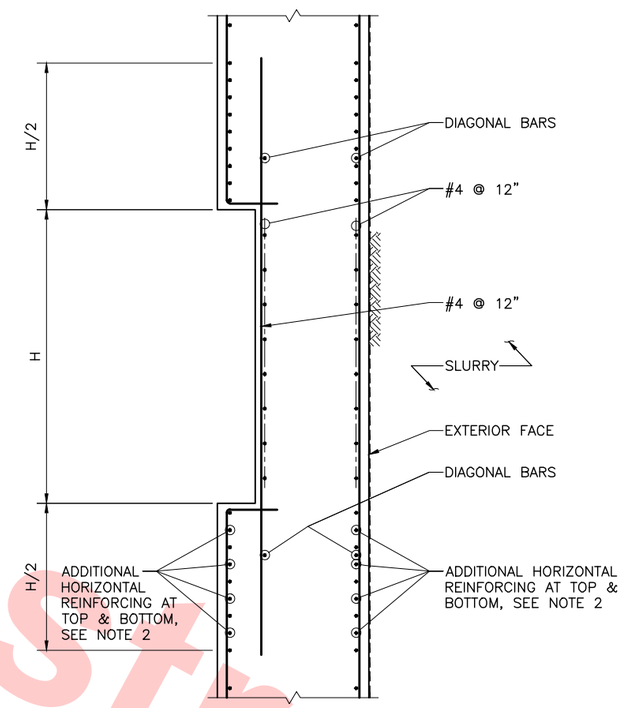

SECTION AT NICHE (2 / DB–S613)
SCALE: 1/2"=1'–0"

Not for Construction

FOR REFERENCE ONLY AND NOT FOR REVIEW.
THIS DRAWING WAS SUBMITTED UNDER
DU-23-WP08 TRENCH PACKAGE

REV	DATE	BY	SUB	APP	DESCRIPTION
0	20130531				READINESS FOR CONSTRUCTION

DESIGNED BY J. REBER, S.E.
DRAWN BY P. DIAZ
CHECKED BY M. TARAZI
IN CHARGE M. TARAZI
DATE 20130531

REGISTERED PROFESSIONAL ENGINEER NORMAN FUAD TARAZI # S 3185 EXP. 6/30/14 STRUCTURAL STATE OF CALIFORNIA

Skanska Shimmick Herzog
1436 California Circle
Milpitas, California 95035
A Joint Venture

MFT Consulting Engineers, Inc. Anil Verma Associates, Inc.
1773 San Pablo Ave., Suite A3 (510) 222-4106
Pinole, CA 94564 Fax (510) 222-6418

Lockwood, Andrews & Newnam, Inc. A LEO A DALY COMPANY
T·Y·LIN INTERNATIONAL

SUBMITTED _____
APPROVED _____

VTA. BART SILICON VALLEY
BART SILICON VALLEY BERRYESSA EXTENSION

LINE, TRACK, STATIONS AND SYSTEMS
DESIGN UNIT 023
MILPITAS STATION
TYPICAL SECTION
DETAILS
SHEET 3 OF 4

CADD FILENAME C700–S–DB–S613.dwg
SIZE D | SCALE AS NOTED
CONTRACT NO. C700 | REV. 0
AREA CODE DB | SHEET NO. S613 | PAGE NO. 0215

cad-02 Jul 05, 2013 – 1:54pm P:\BART Berryessa Extension Line\S – STRUCTURAL MILPITAS\WORK_6-10-2012\C700-S-DB-S613.dwg

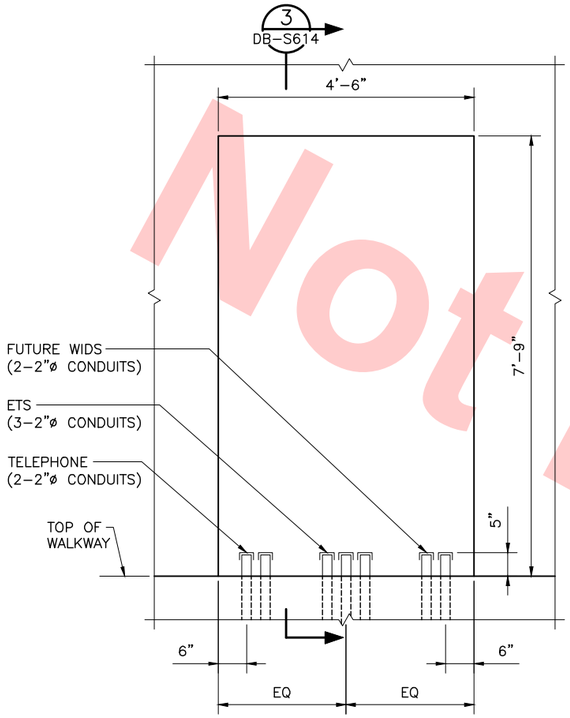

BLUE LIGHT STATION (BLS)
NICHE ELEVATION
SCALE: 3/4"=1'-0"
1 DB-S614
DB-S111
DB-S206X

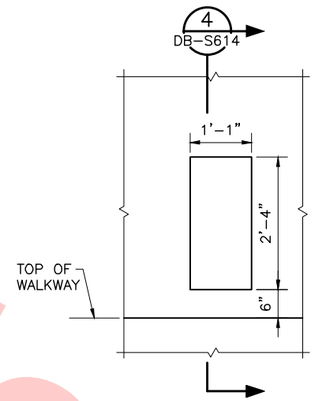

CABINET NICHE ELEVATION
FIRE EXTINGUISHER (EXT)
SCALE: 3/4"=1'-0"
2 DB-S614
DB-S206X

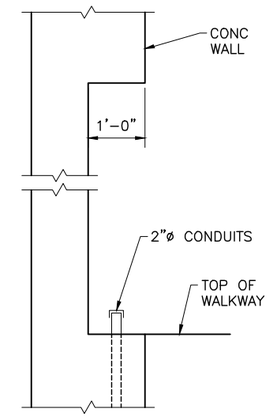

SECTION AT BLS
SCALE: 3/4"=1'-0"
3 DB-S614
DB-S614

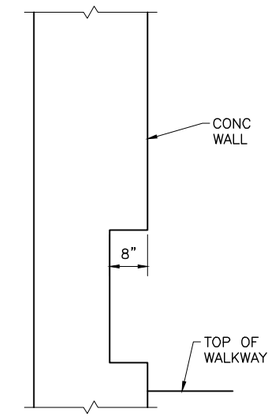

SECTION AT EXT
SCALE: 3/4"=1'-0"
4 DB-S614
DB-S614

Not For Construction

FOR REFERENCE ONLY AND NOT FOR REVIEW.
THIS DRAWING WAS SUBMITTED UNDER
DU-23-WP08 TRENCH PACKAGE

REV	DATE	BY	SUB	APP	DESCRIPTION
0	20130531				READINESS FOR CONSTRUCTION

DESIGNED BY J. REBER, S.E.
DRAWN BY P. DIAZ
CHECKED BY M. TARAZI
IN CHARGE M. TARAZI
DATE 20130531

REGISTERED PROFESSIONAL ENGINEER MINAY FUAD TARAZI # S 3185 EXP. 6/30/14 STRUCTURAL STATE OF CALIFORNIA

Skanska Shimmick Herzog
1436 California Circle
Milpitas, California 95035
A Joint Venture

MFT Consulting Engineers, Inc. Anil Verma Associates, Inc.
1773 San Pablo Ave., Suite A3 (510) 222-4106
Pinole, CA 94564 Fax (510) 222-6418

Lockwood, Andrews & Newnam, Inc. A LAN & NALY COMPANY
T-Y-LIN INTERNATIONAL

SUBMITTED _____
APPROVED _____

VTA BART SILICON VALLEY
BART SILICON VALLEY BERRYESSA EXTENSION

LINE, TRACK, STATIONS AND SYSTEMS
DESIGN UNIT 023
MILPITAS STATION
TYPICAL SECTION
DETAILS
SHEET 4 OF 4

CADD FILENAME C700-S-DB-S614.dwg
SIZE D | SCALE 3/4" = 1'-0"
CONTRACT NO. C700 | REV. 0
AREA CODE DB | SHEET NO. S614 | PAGE NO. 0216

cad-02 Jul 05, 2013 - 1:54pm P:\BART Berryessa Extension Line\S - STRUCTURAL, MILPITAS\WORK_6-10-2012\C700-S-DB-S614.dwg

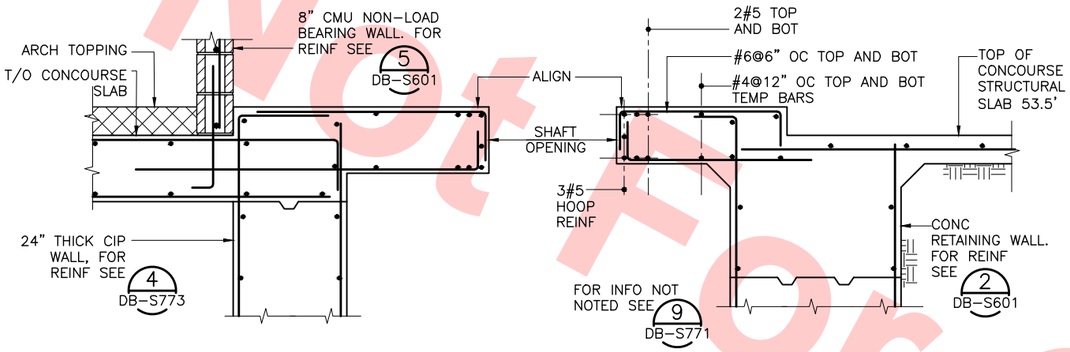

SECTION 1 DB-S641 DB-S121
SCALE: 3/4" = 1'-0"

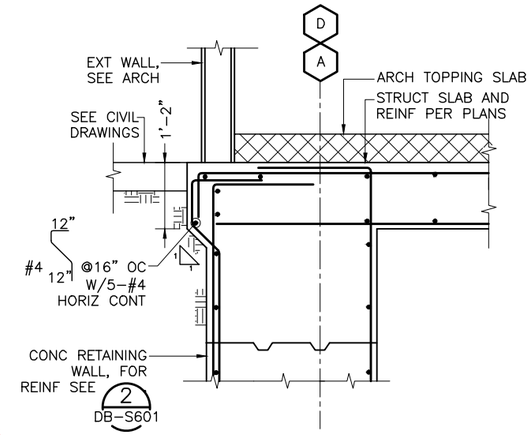

DETAIL 2 DB-S641 DB-S122 DB-S123
SCALE: 3/4" = 1'-0"

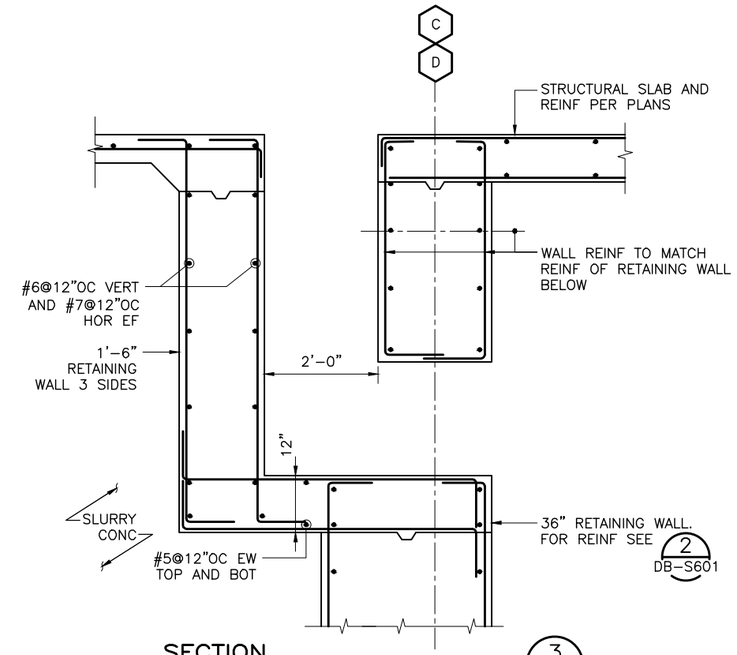

SECTION 3 DB-S641 DB-S122 DB-S123 DB-S124 DB-S125
SCALE: 3/4" = 1'-0"

FOR REFERENCE ONLY AND NOT FOR REVIEW.
THIS DRAWING WAS SUBMITTED UNDER
DU-23-WP08 TRENCH PACKAGE

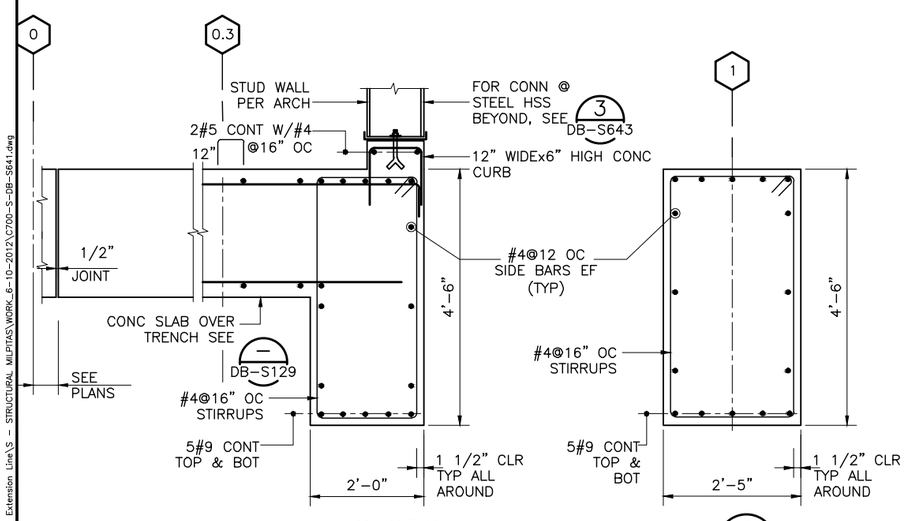

SECTION 4 DB-S641 DB-S121 DB-S643 DB-S721
SCALE: 3/4"=1'-0"

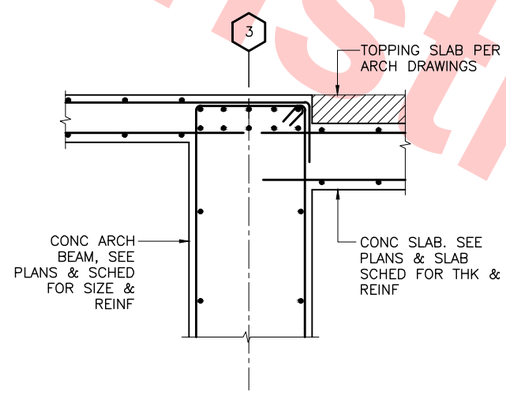

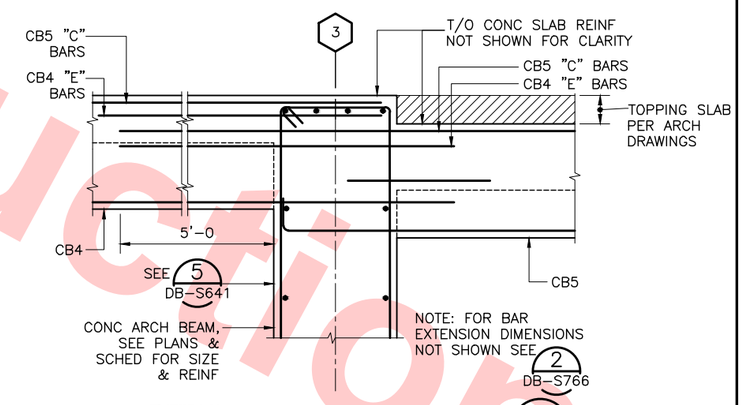

DETAIL 5 DB-S641 DB-S121
SCALE: 3/4"=1'-0"

DETAIL 6 DB-S641 DB-S121 DB-S201X
SCALE: 3/4"=1'-0"

Not For Construction

REV	DATE	BY	SUB	APP	DESCRIPTION
0	20130531				READINESS FOR CONSTRUCTION

DESIGNED BY J. REBER, S.E.
DRAWN BY P. DIAZ
CHECKED BY M. TARAZI
IN CHARGE M. TARAZI
DATE 20130531

REGISTERED PROFESSIONAL ENGINEER NIMAH FUAD TARAZI # S 3185 EXP.6/30/14 STRUCTURAL STATE OF CALIFORNIA

Skanska Shimmick Herzog
1436 California Circle
Milpitas, California 95035
A Joint Venture

MFT Consulting Engineers, Inc. Anil Verma Associates, Inc.
1773 San Pablo Ave., Suite A3 (510) 222-4106
Pinole, CA 94564 Fax (510) 222-6418

Lockwood, Andrews & Newnam, Inc. A CH2M HILL COMPANY
T-Y-LIN INTERNATIONAL

SUBMITTED
APPROVED

VTA BART SILICON VALLEY
BART SILICON VALLEY BERRYESSA EXTENSION

LINE, TRACK, STATIONS AND SYSTEMS
DESIGN UNIT 023
MILPITAS STATION
CONCOURSE SECTIONS
AND DETAILS
SHEET 1 OF 10

CADD FILENAME C700-S-DB-S641.dwg
SIZE D | SCALE AS NOTED
CONTRACT NO. C700 | REV. 0
AREA CODE DB | SHEET NO. S641 | PAGE NO. 0217

cad-02 Jul 05, 2013 – 1:54pm P:\BART Berryessa Extension Line\S – STRUCTURAL, MILPITAS\WORK_6-10-2012\C700-S-DB-S641.dwg

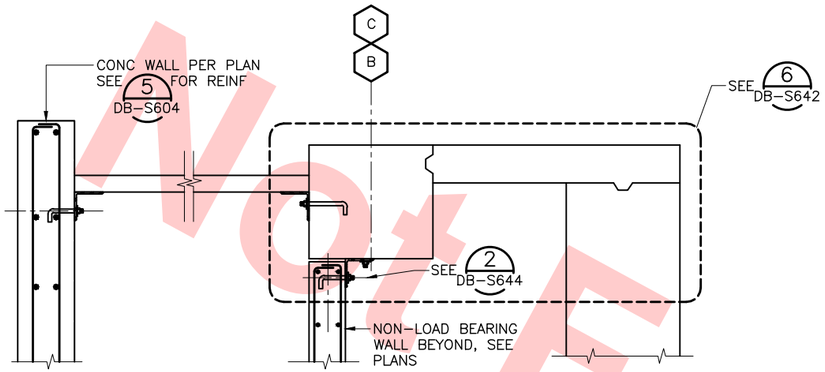

SECTION 1 DB-S642 — DB-S128, DB-S206X
SCALE: 3/4" = 1'-0"

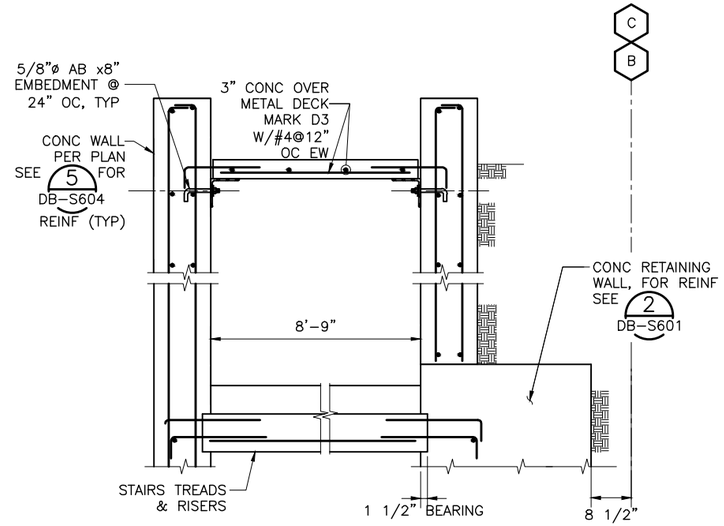

SECTION 2 DB-S642 — DB-S128, DB-S206X, DB-S148
SCALE: 3/4" = 1'-0"

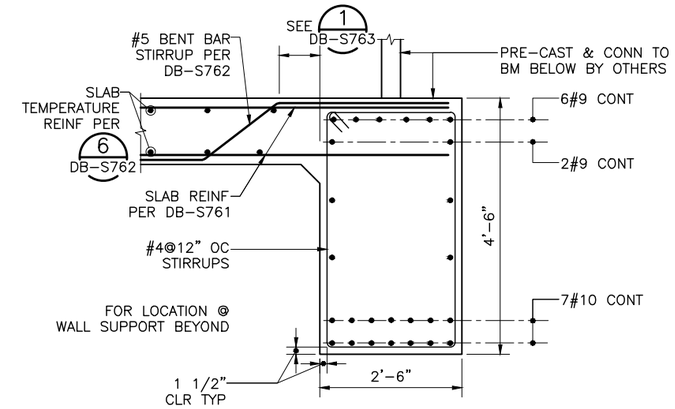

SECTION 3 DB-S642 — DB-S127, DB-S205X
SCALE: 3/4" = 1'-0"

FOR REFERENCE ONLY AND NOT FOR REVIEW.
THIS DRAWING WAS SUBMITTED UNDER
DU-23-WP08 TRENCH PACKAGE

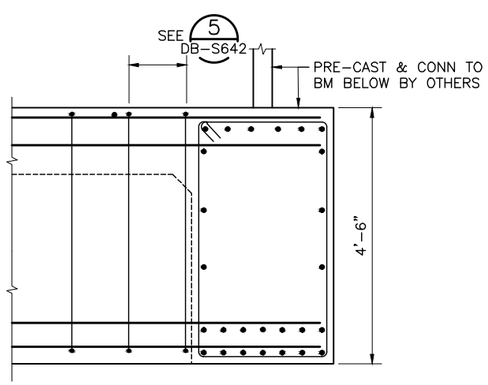

DETAIL 4 DB-S642 — DB-S127
SCALE: 3/4" = 1'-0"

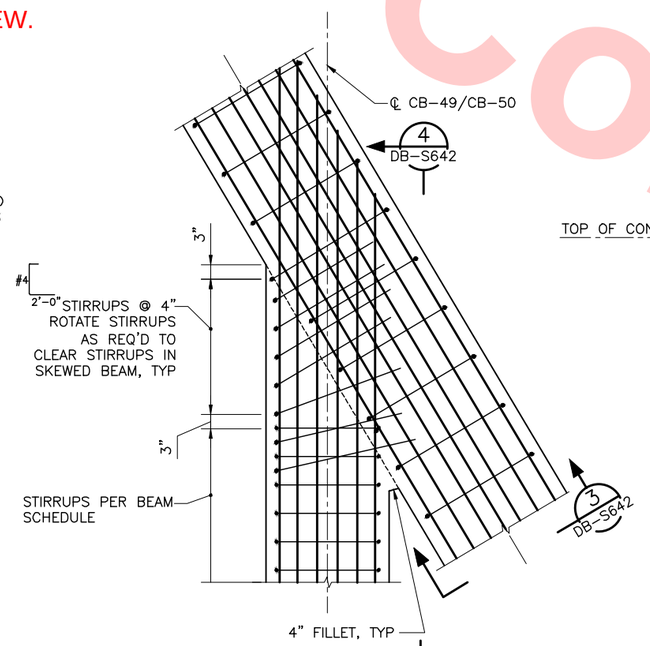

DETAIL 5 DB-S642 — DB-S127
SCALE: 3/4" = 1'-0"

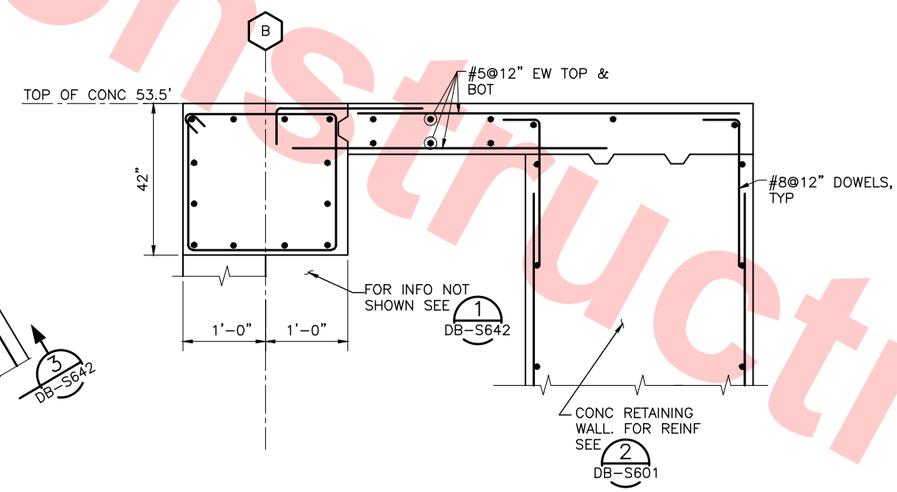

DETAIL 6 DB-S642 — DB-S128, DB-S642
SCALE: 1" = 1'-0"

Not For Construction

REV	DATE	BY	SUB	APP	DESCRIPTION
0	20130531				READINESS FOR CONSTRUCTION

DESIGNED BY J. REBER, S.E.
DRAWN BY P. DIAZ
CHECKED BY M. TARAZI
IN CHARGE M. TARAZI
DATE 20130531

REGISTERED PROFESSIONAL ENGINEER NOMAN FUAD TARAZI # S 3185 EXP. 6/30/14 STRUCTURAL STATE OF CALIFORNIA

Skanska Shimmick Herzog
1436 California Circle
Milpitas, California 95035
A Joint Venture

MFT Consulting Engineers, Inc. Anil Verma Associates, Inc.
1773 San Pablo Ave., Suite A3 (510) 222-4106
Pinole, CA 94564 Fax (510) 222-6418

Lockwood, Andrews & Newnam, Inc. A LAN & MAY COMPANY | T-Y-LIN INTERNATIONAL

SUBMITTED _____ APPROVED _____

VTA BART SILICON VALLEY
BART SILICON VALLEY BERRYESSA EXTENSION

LINE, TRACK, STATIONS AND SYSTEMS
DESIGN UNIT 023
MILPITAS STATION
CONCOURSE SECTIONS
AND DETAILS
SHEET 2 OF 10

CADD FILENAME C700-S-DB-S642.dwg
SIZE D SCALE AS NOTED
CONTRACT NO. C700 REV. 0
AREA CODE DB SHEET NO. S642 PAGE NO. 0218

cad-02 Jul 08, 2013 – 10:16am P:\BART Berryessa Extension Line\S – STRUCTURAL MILPITAS\WORK_6-10-2012\C700-S-DB-S642.dwg

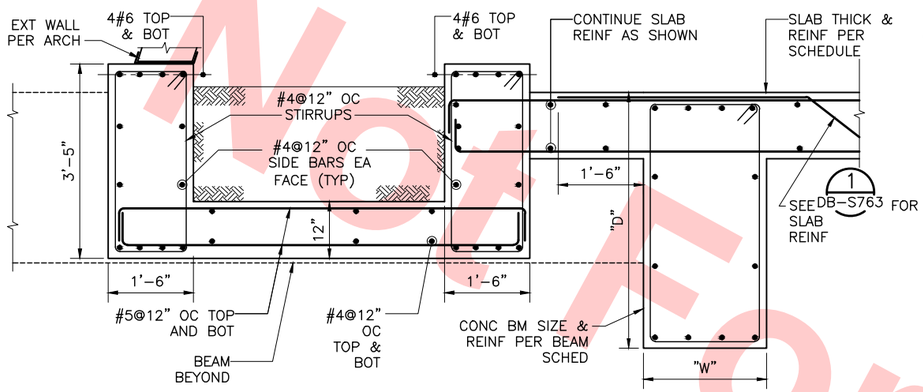

SECTION 1 DB-S643
SCALE: 3/4"=1'-0"
DB-S126
DB-S204X

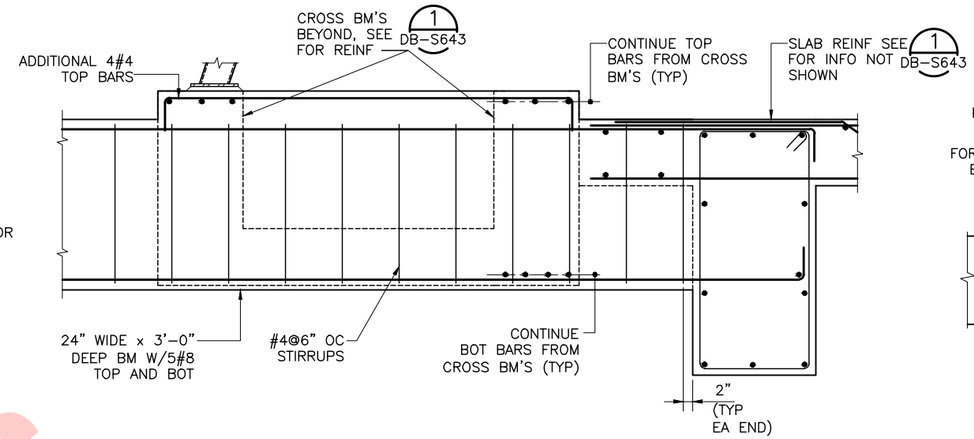

SECTION 2 DB-S643
SCALE: 3/4"=1'-0"
DB-S126

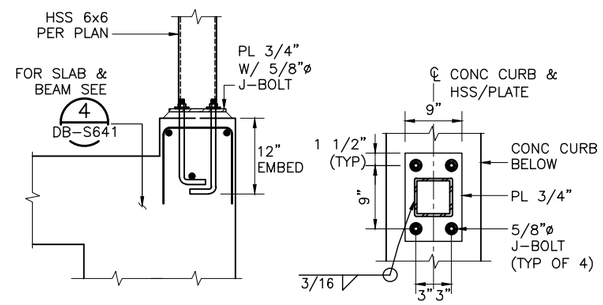

SECTION 3 DB-S643
SCALE: 1"=1'-0"
DB-S641

FOR REFERENCE ONLY AND NOT FOR REVIEW.
THIS DRAWING WAS SUBMITTED UNDER
DU-23-WP08 TRENCH PACKAGE

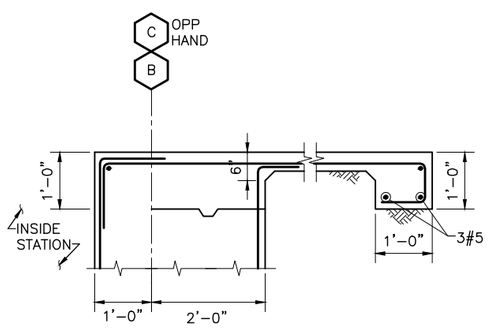

SECTION 4 DB-S643
SCALE: 3/4"=1'-0"
DB-S121

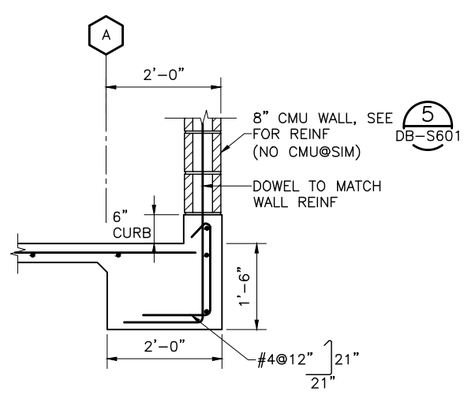

SECTION 5 DB-S643
SCALE: 3/4"=1'-0"
DB-S121

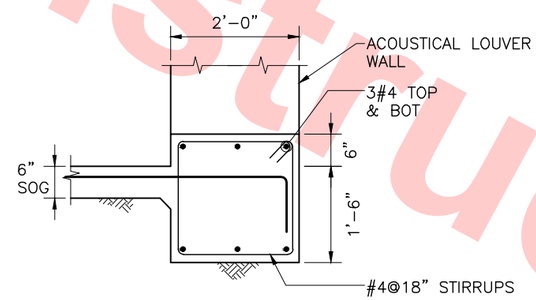

SECTION 6 DB-S643
SCALE: 3/4"=1'-0"
DB-S121

Not For Construction

REV	DATE	BY	SUB	APP	DESCRIPTION

DESIGNED BY J. REBER, S.E.
DRAWN BY P. DIAZ
CHECKED BY M. TARAZI
IN CHARGE M. TARAZI
DATE

REGISTERED PROFESSIONAL ENGINEER HUMAN FUAD TARAZI # S 3185 EXP. 6/30/14 STRUCTURAL STATE OF CALIFORNIA

Skanska Shimmick Herzog
1436 California Circle
Milpitas, California 95035
A Joint Venture

MFT Consulting Engineers, Inc. Anil Verma Associates, Inc.
1773 San Pablo Ave., Suite A3 (510) 222-4106
Pinole, CA 94564 Fax (510) 222-6418

Lockwood, Andrews & Newnam, Inc. A LAN & BALY COMPANY
T-Y-LIN INTERNATIONAL

SUBMITTED
APPROVED

VTA BART SILICON VALLEY
BART SILICON VALLEY BERRYESSA EXTENSION

LINE, TRACK, STATIONS AND SYSTEMS
DESIGN UNIT 023
MILPITAS STATION
CONCOURSE SECTIONS
AND DETAILS
SHEET 3 OF 10

CADD FILENAME C700-S-DB-S643.dwg
SIZE D | SCALE AS NOTED
CONTRACT NO. C700 | REV. 0
AREA CODE DB | SHEET NO. S643 | PAGE NO. 0219

cad-02 Jul 05, 2013 - 3:37pm P:\BART Berryessa Extension Line\S - STRUCTURAL MILPITAS\WORK_6-10-2012\C700-S-DB-S643.dwg

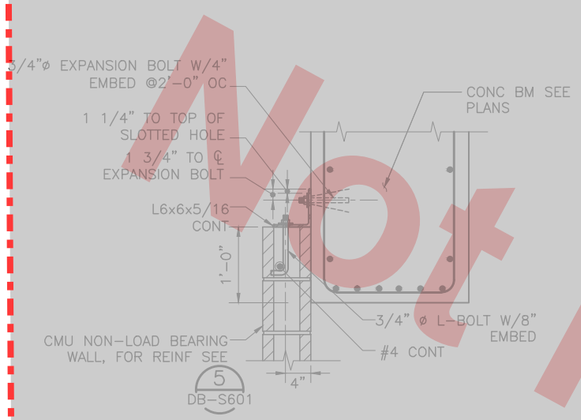

SECTION 1 DB-S644 DB-S212
SCALE: 1"=1'-0"

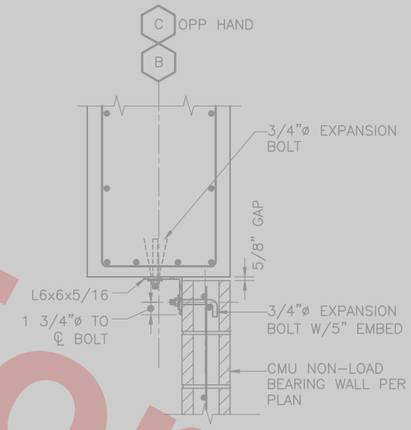

SECTION 2 DB-S644 DB-S214
SCALE: 1" = 1'-0"

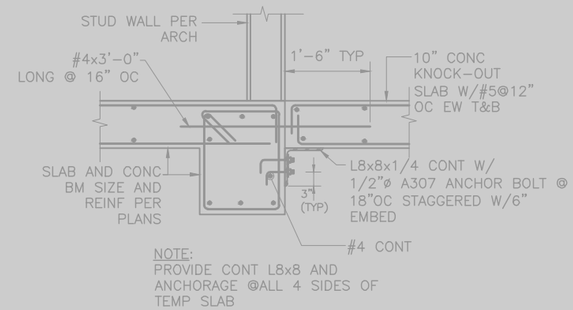

SECTION 3 DB-S644 DB-S124 DB-S125 DB-S603
SCALE: 3/4" = 1'-0"

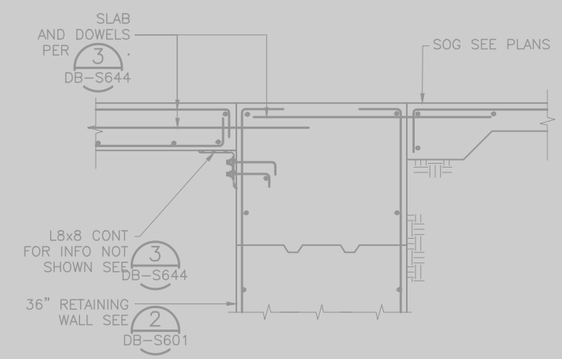

SECTION 4 DB-S644 DB-S124 DB-S125 DB-S603
SCALE: 3/4" = 1'-0"

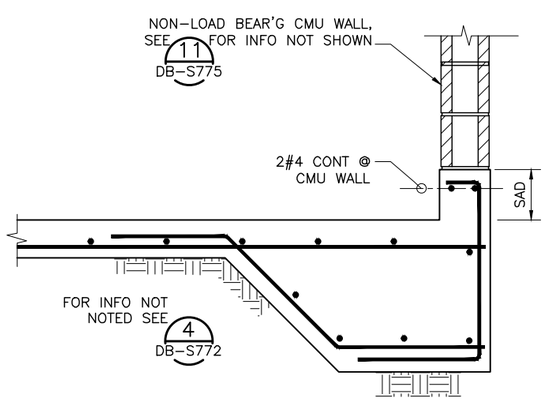

DETAIL 5 DB-S644 DB-S121
SCALE: 1"=1'-0"

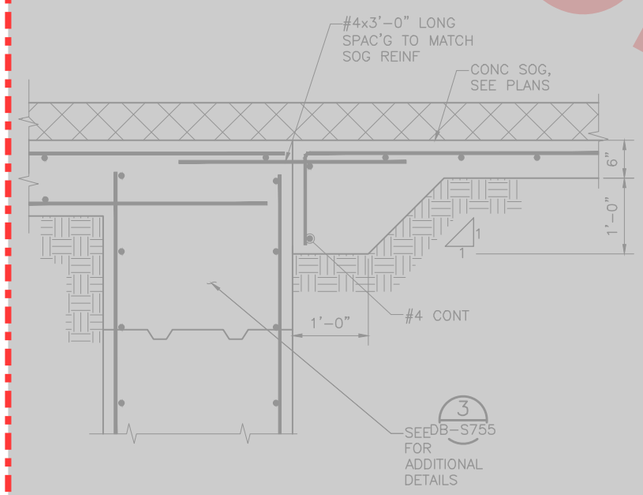

SECTION 6 DB-S644 DB-S122 DB-S123 DB-S124 DB-S125
SCALE: 1" = 1'-0"

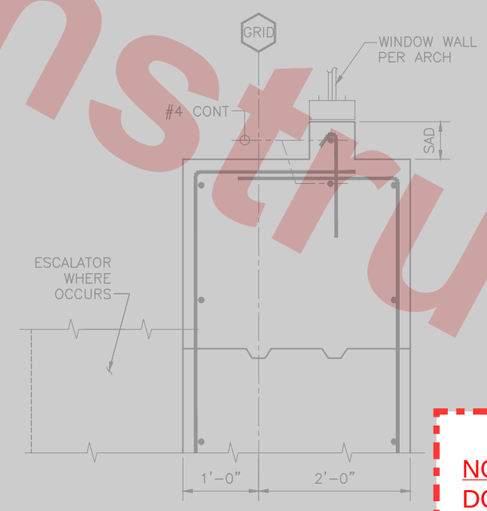

DETAIL 7 DB-S644 DB-S122
SCALE: 1" = 1'-0"

Santa Clara Valley Transportation Authority

____NO EXCEPTIONS TAKEN (NET)
____MAKE CORRECTIONS NOTED (MCN)
____AMEND AND RESUBMIT (A/R)

Any action shown above is subject to the terms of the contract and does not relieve the Contractor of any of its obligations under the contract, including design and detailing.

Contract No.: DB11002F

By: _____ Date: _____

NOTE TO REVIEWER(S):
DO NOT REVIEW AREAS DESIGNATED AS

Not For Construction

REV	DATE	BY	SUB	APP	DESCRIPTION
0	20130710				READINESS FOR CONSTRUCTION
0	20130531				READINESS FOR CONSTRUCTION

DESIGNED BY J. REBER, S.E.
DRAWN BY P. DIAZ
CHECKED BY M. TARAZI
IN CHARGE M. TARAZI
DATE 20130710

REGISTERED PROFESSIONAL ENGINEER SOHAM FUAD TAHA # S-3185 EXP. 6/30/14 STRUCTURAL STATE OF CALIFORNIA

Skanska Shimmick Herzog
1436 California Circle
Milpitas, California 95035
A Joint Venture

MFT Consulting Engineers, Inc. 1773 San Pablo Ave., Suite A3 Pinole, CA 94564 (510) 222-4106 Fax (510) 222-4116
Anil Verma Associates, Inc.
Lockwood, Andrews & Newnam, Inc. A LEO A DALY COMPANY
T·Y·LIN INTERNATIONAL

SUBMITTED _____ APPROVED _____

VTA BART SILICON VALLEY
BART SILICON VALLEY BERRYESSA EXTENSION

LINE, TRACK, STATIONS AND SYSTEMS
DESIGN UNIT 023
MILPITAS STATION
CONCOURSE SECTIONS
AND DETAILS
SHEET 4 OF 10

CADD FILENAME C700-S-DB-S644.dwg
SIZE D | SCALE AS NOTED
CONTRACT NO. C700 | REV. 0
AREA CODE DB | SHEET NO. S644 | PAGE NO. 0220

cad-02 Jul 05, 2013 - 1:54pm P:\BART Berryessa Extension Line\S - STRUCTURAL MILPITAS\WORK_6-10-2012\C700-S-DB-S644.dwg

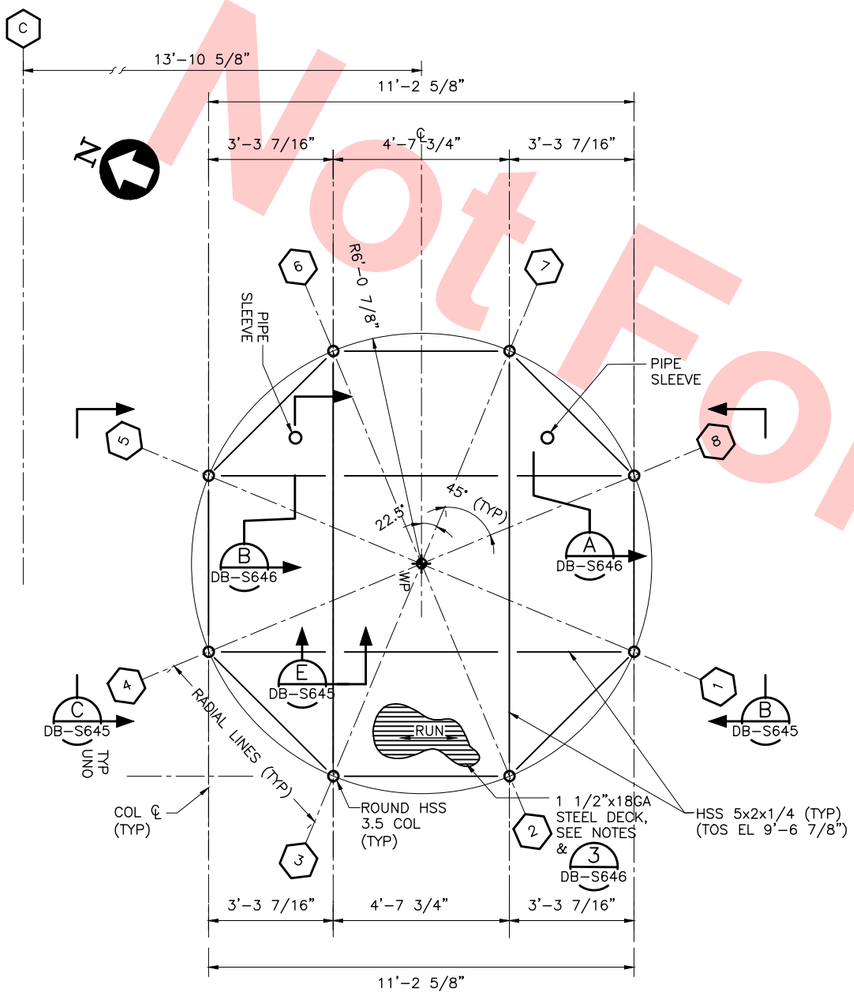

PLAN
SCALE: 1/2" = 1'-0"
A DB-S645 DB-S125

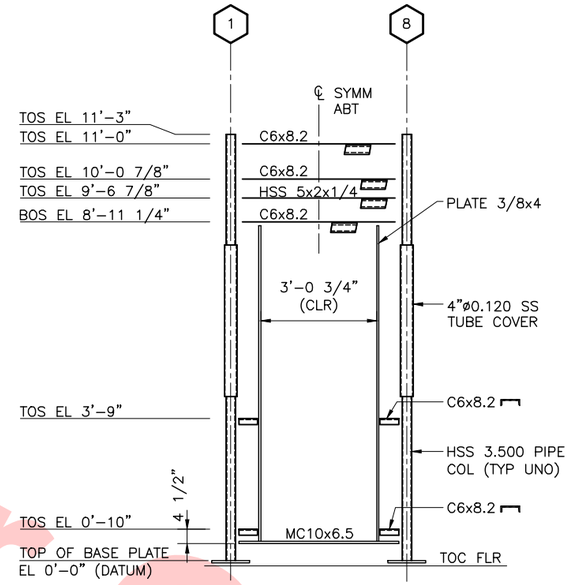

AT DOOR PANEL

ELEVATION
SCALE: 1/2" = 1'-0"
B DB-S645 DB-S645

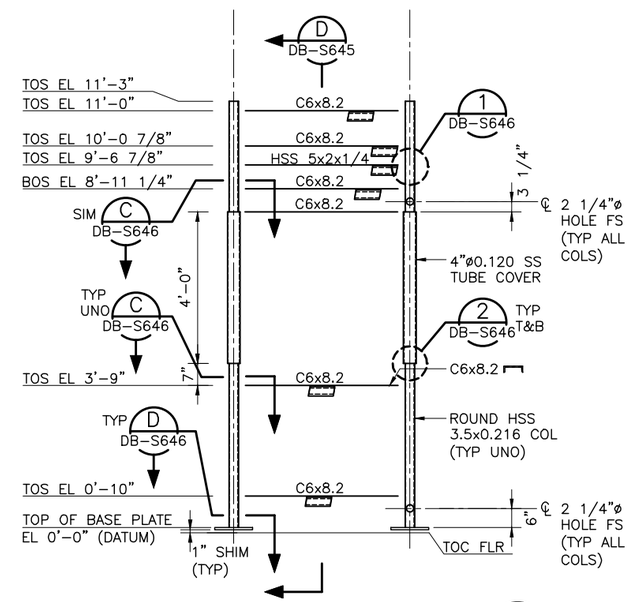

ELEVATION
SCALE: 1/2" = 1'-0"
C DB-S645 DB-S645

NOTES:

1. FOR ABBREVIATIONS & SYMBOLS SEE DWGS DB-S002X.
2. FOR GENERAL NOTES, SEE DWGS DB-S001X, DB-S002X & DB-S003X.
3. DECKING SHALL BE 1 1/2". 18 GAUGE GALVANIZED COMPOSITE FLOOR DECK UNLESS OTHERWISE NOTED.
4. ALL DECK FLUTES AT SUPPORTS AND BOUNDARIES TO HAVE ARC SPOT (PUDDLE) WELD WITH EFFECTIVE FUSION DIAMETER OF 1/2" MIN OR AN EFFECTIVE AREA OF 3/8"x1" SPOT WELD AT ALL BOUNDARY EDGES PARALLEL TO DECK FLUTES AT 6" OC TYP (STAGGERED WELDS AT SUPPORTS).
5. DECK INSIDE SEAMS SHALL BE BUTTON PUNCHED OR HAVE 1 1/2" SEAM WELDS AT 24" OC.
6. DECKING IS SUPPORTED BY HSS 5x2'S @ TOS EL 9'-6 7/8" INCLUDING PERIMETER HSS 5x2x1/4 BEAMS.

Santa Clara Valley Transportation Authority

____NO EXCEPTIONS TAKEN (NET)
____MAKE CORRECTIONS NOTED (MCN)
____AMEND AND RESUBMIT (A/R)

Any action shown above is subject to the terms of the contract and does not relieve the Contractor of any of its obligations under the contract, including design and detailing.

Contract No.: DB11002F

By: _____ Date: _____

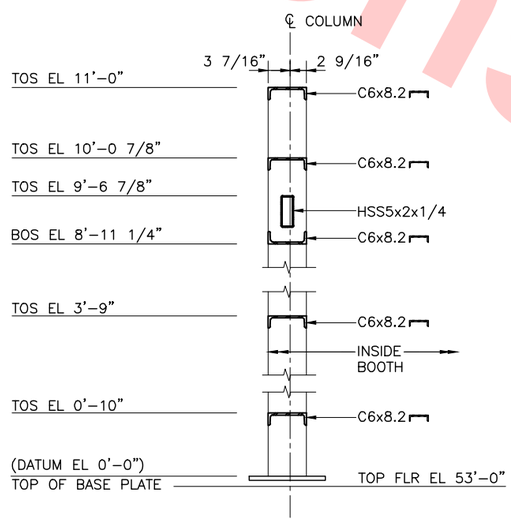

SECTION
SCALE: 1" = 1'-0"
D DB-S645 DB-S645

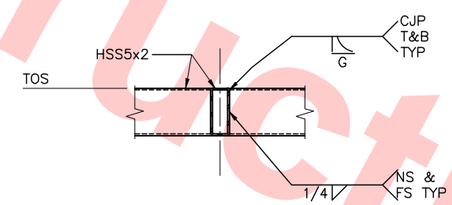

SECTION
SCALE: 1 1/2" = 1'-0"
E DB-S645 DB-S645

REV	DATE	BY	SUB	APP	DESCRIPTION
0	20130710				READINESS FOR CONSTRUCTION

DESIGNED BY J. REBER, S.E.
DRAWN BY P. DIAZ
CHECKED BY M. TARAZI
IN CHARGE M. TARAZI
DATE 20130710

REGISTERED PROFESSIONAL ENGINEER SOHAM PUAD # S-3185 EXP. 6/30/14 STRUCTURAL STATE OF CALIFORNIA

Skanska Shimmick Herzog
1436 California Circle Milpitas, California 95035
A Joint Venture

MFT Consulting Engineers, Inc. 1773 San Pablo Ave., Suite A3 Pinole, CA 94564 (510) 222-4106 Fax (510) 222-4110 Anil Verma Associates, Inc.
SUBMITTED

Lockwood, Andrews & Newnam, Inc. A LEO A DALY COMPANY
T-Y-LIN INTERNATIONAL
APPROVED

BART SILICON VALLEY
BART SILICON VALLEY BERRYESSA EXTENSION

LINE, TRACK, STATIONS AND SYSTEMS DESIGN UNIT 023
MILPITAS STATION
CONCOURSE SECTIONS AND DETAILS
SHEET 5 OF 10

CADD FILENAME C700-S-DB-S645.dwg
SIZE D | SCALE AS NOTED
CONTRACT NO. C700 | REV. 0
AREA CODE DB | SHEET NO. S645 | PAGE NO. 0221

cad-02 Jul 05, 2013 - 3:37pm P:\BART Berryessa Extension Line\S - STRUCTURAL MILPITAS\WORK_6-10-2012\C700-S-DB-S645.dwg

Not For Construction

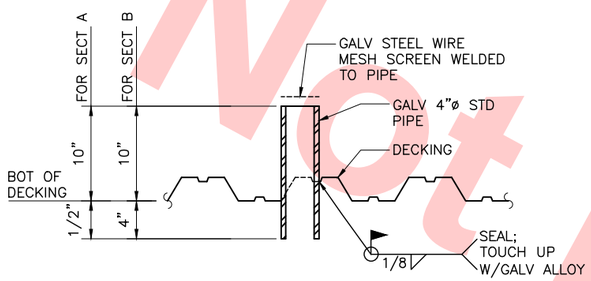

SECTION A B
SCALE:1 1/2" = 1'-0"
DB-S646 DB-S646 DB-S645

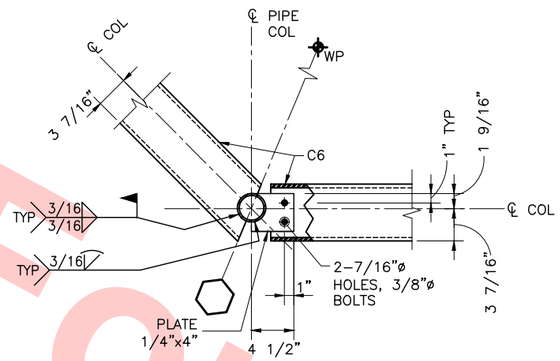

SECTION C
SCALE: 1 1/2" = 1'-0"
DB-S646 DB-S645

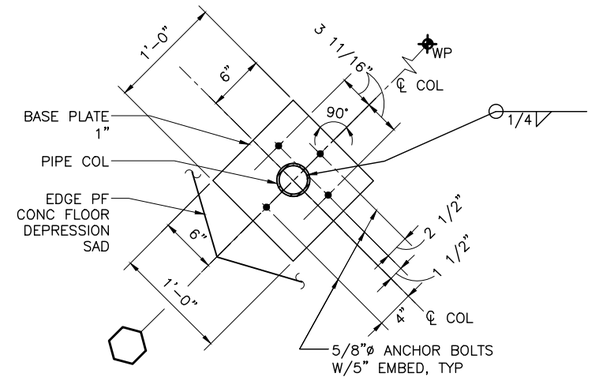

SECTION D
SCALE: 1 1/2" = 1'-0"
DB-S646 DB-S645

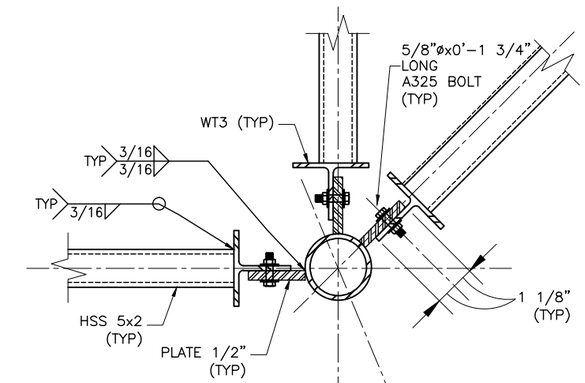

SECTION A-A

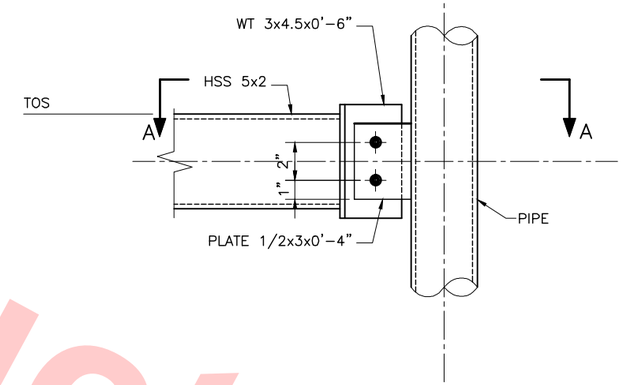

DETAIL 1
SCALE: 3" = 1'-0"
DB-S646 DB-S645

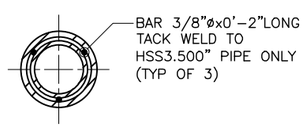

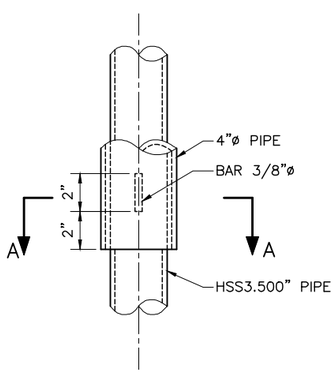

DETAIL 2
SCALE: 3" = 1'-0"
DB-S646 DB-S645

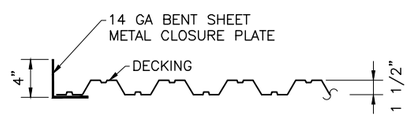

TYP SECT ALONG DECKING PERIMETER AND OPENINGS

DETAIL 3
SCALE: 1/2" = 1'-0"
DB-S646 DB-S645

Santa Clara Valley Transportation Authority

____NO EXCEPTIONS TAKEN (NET)
____MAKE CORRECTIONS NOTED (MCN)
____AMEND AND RESUBMIT (A/R)

Any action shown above is subject to the terms of the contract and does not relieve the Contractor of any of its obligations under the contract, including design and detailing.

Contract No.: DB11002F

By: _____ **Date:** _____

Not For Construction

REV	DATE	BY	SUB	APP	DESCRIPTION
0	20130710				READINESS FOR CONSTRUCTION

DESIGNED BY J. REBER, S.E.
DRAWN BY P. DIAZ
CHECKED BY M. TARAZI
IN CHARGE M. TARAZI
DATE 20130710

PROFESSIONAL ENGINEER SOHAM FUAD TARAZI # S-3185 EXP. 6/30/14 STRUCTURAL STATE OF CALIFORNIA

Skanska Shimmick Herzog
1436 California Circle
Milpitas, California 95035
A Joint Venture

MFT Consulting Engineers, Inc. 1773 San Pablo Ave., Suite A3 Pinole, CA 94564 (510) 222-4106 Fax (510) 222-4418
Anil Verma Associates, Inc.
Leakwood, Andrews & Newnam, Inc. A LEO A DALY COMPANY
T-Y-LIN INTERNATIONAL

SUBMITTED
APPROVED

BART SILICON VALLEY
BART SILICON VALLEY BERRYESSA EXTENSION

LINE, TRACK, STATIONS AND SYSTEMS
DESIGN UNIT 023
MILPITAS STATION
CONCOURSE SECTIONS
AND DETAILS
SHEET 6 OF 10

CADD FILENAME C700-S-DB-S646.dwg
SIZE D | SCALE AS NOTED
CONTRACT NO. C700 | REV. 0
AREA CODE DB | SHEET NO. S646 | PAGE NO. 0222

cad-02 Jul 05, 2013 - 1:54pm P:\BART Berryessa Extension Line\S - STRUCTURAL MILPITAS\WORK_6-10-2012\C700-S-DB-S646.dwg

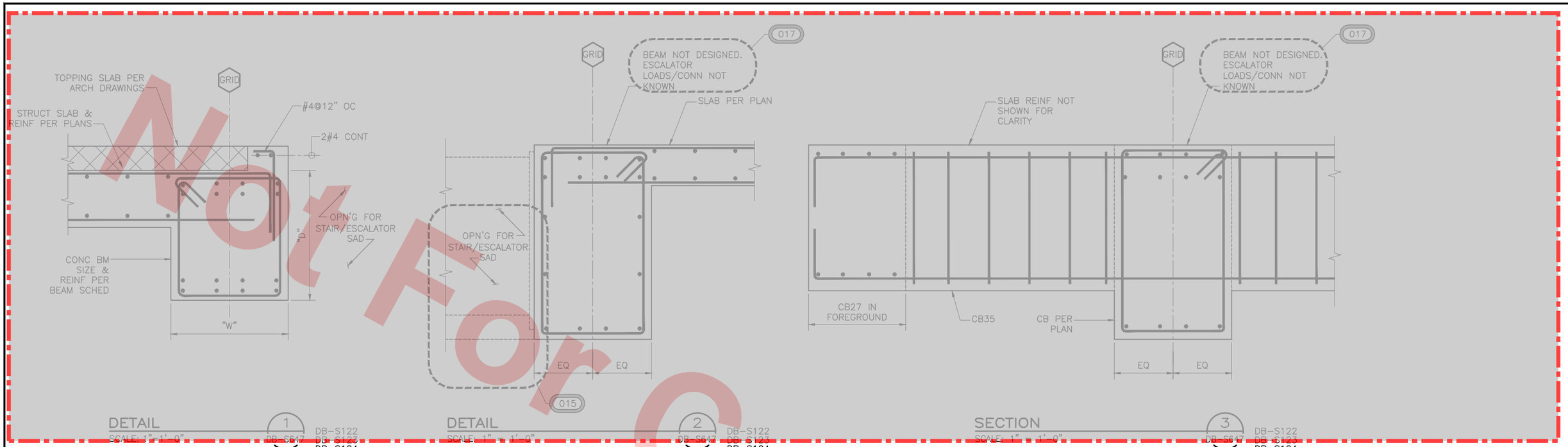

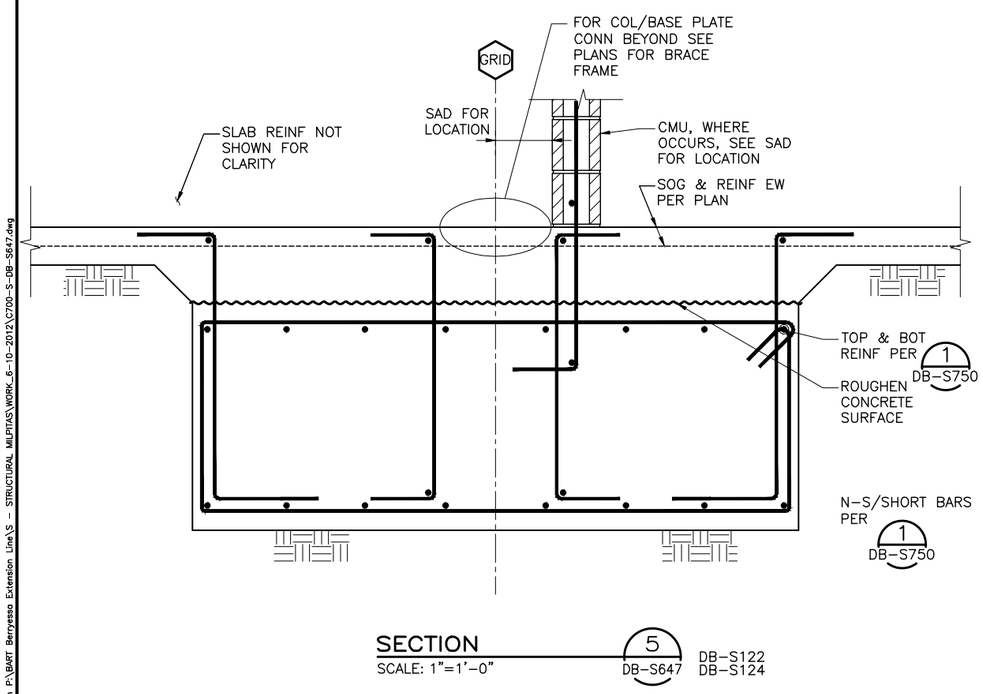

NOTE TO REVIEWER(S):
DO NOT REVIEW AREAS DESIGNATED AS

Santa Clara Valley Transportation Authority

____NO EXCEPTIONS TAKEN (NET)
____MAKE CORRECTIONS NOTED (MCN)
____AMEND AND RESUBMIT (A/R)

Any action shown above is subject to the terms of the contract and does not relieve the Contractor of any of its obligations under the contract, including design and detailing.

Contract No.: DB11002F

By: _____ **Date:** _____

Not For Construction

REV	DATE	BY	SUB	APP	DESCRIPTION
0	20130710				READINESS FOR CONSTRUCTION
0	20130531				READINESS FOR CONSTRUCTION

DESIGNED BY J. REBER, S.E.
DRAWN BY P. DIAZ
CHECKED BY M. TARAZI
IN CHARGE M. TARAZI
DATE 20130710

REGISTERED PROFESSIONAL ENGINEER SOHAIL FIAZ # S-3185 EXP. 6/30/14 STRUCTURAL STATE OF CALIFORNIA

Skanska Shimmick Herzog
1436 California Circle
Milpitas, California 95035
A Joint Venture

MFT CONSULTING ENGINEERS, INC. Anil Verma Associates, Inc.
1773 San Pablo Ave., Suite A3 (510) 222-4106
Pinole, CA 94564 Fax (510) 222-4116
SUBMITTED

Lockwood, Andrews & Newnam, Inc. A LAN & BALY COMPANY
T·Y·LIN INTERNATIONAL
APPROVED

VTA BART SILICON VALLEY
BART SILICON VALLEY BERRYESSA EXTENSION

LINE, TRACK, STATIONS AND SYSTEMS
DESIGN UNIT 023
MILPITAS STATION
CONCOURSE SECTIONS AND DETAILS
SHEET 7 OF 10

CADD FILENAME C700-S-DB-S647.dwg
SIZE D | SCALE AS NOTED
CONTRACT NO. C700 | REV. 0
AREA CODE DB | SHEET NO. S647 | PAGE NO. 0223

cad-02 Jul 05, 2013 - 1:54pm P:\BART Berryessa Extension Line\S - STRUCTURAL MILPITAS\WORK_6-10-2012\C700-S-DB-S647.dwg

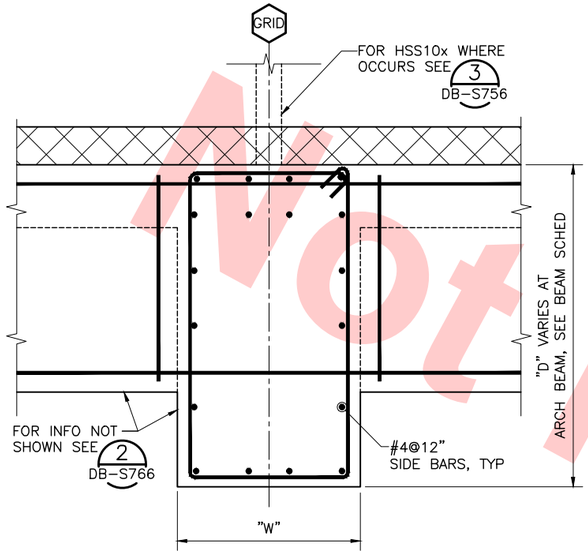

DETAIL 1 DB-S648 DB-S122
SCALE: 1"=1'-0"

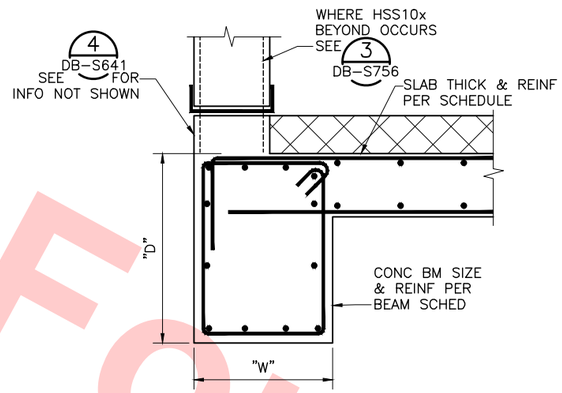

DETAIL 2 DB-S648 DB-S122
SCALE: 1"=1'-0"

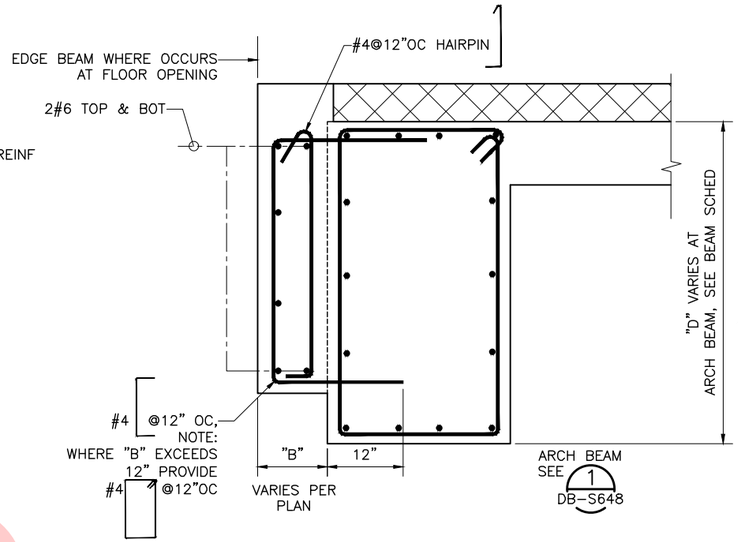

DETAIL 3 DB-S648 DB-S122
SCALE: 1"=1'-0"

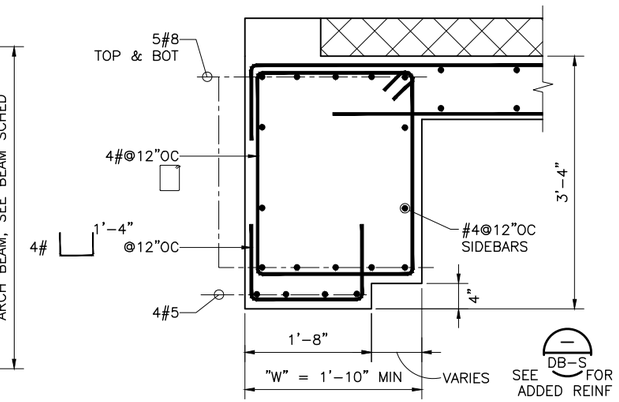

DETAIL 4 DB-S648 DB-S123
SCALE: 1"=1'-0"

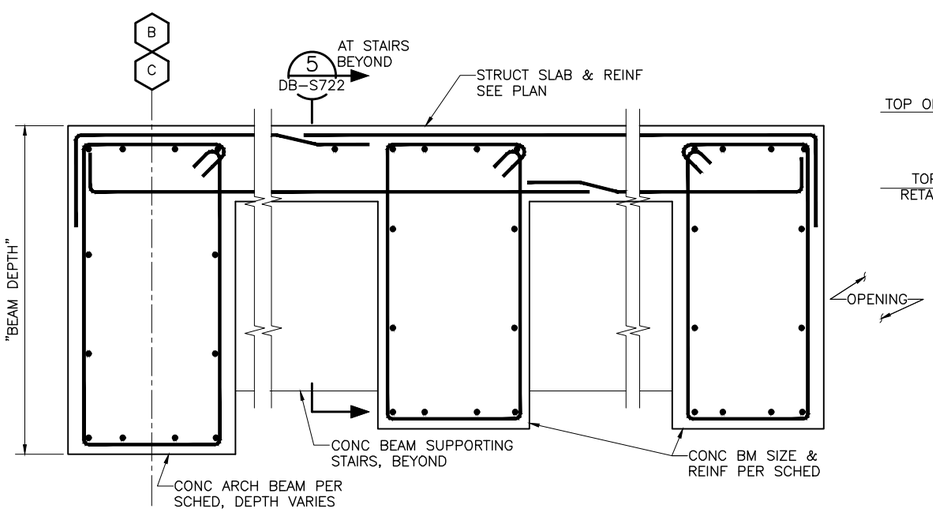

SECTION 5 DB-S648 DB-S125
SCALE: 1"=1'-0"

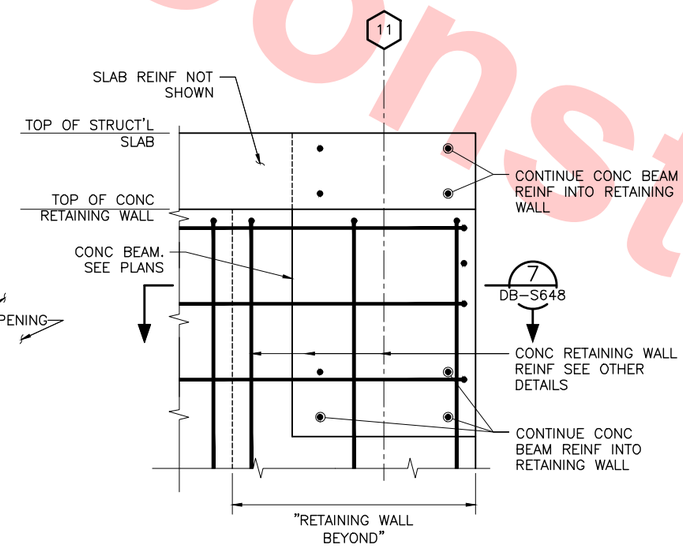

DETAIL 6 DB-S648 DB-S124 DB-S125
SCALE: 1"=1'-0"

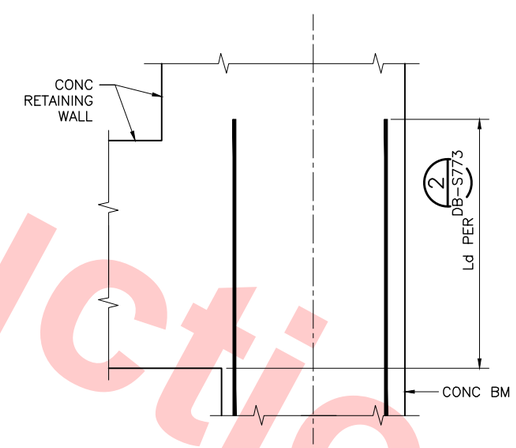

SECTION 7 DB-S648
SCALE: 1"=1'-0"

FOR REFERENCE ONLY AND NOT FOR REVIEW.
THIS DRAWING WAS SUBMITTED UNDER
DU-23-WP08 TRENCH PACKAGE

Not For Construction

REV	DATE	BY	SUB	APP	DESCRIPTION
0	20130531				READINESS FOR CONSTRUCTION

DESIGNED BY J. REBER, S.E.
DRAWN BY P. DIAZ
CHECKED BY M. TARAZI
IN CHARGE M. TARAZI
DATE 20130531

REGISTERED PROFESSIONAL ENGINEER NAMAN FUAD TARAZI # S 3185 EXP. 6/30/14 STRUCTURAL STATE OF CALIFORNIA

Skanska Shimmick Herzog
1436 California Circle Milpitas, California 95035
A Joint Venture

MFT Consulting Engineers, Inc. Anil Verma Associates, Inc. 1773 San Pablo Ave., Suite A3 (510) 222-4106 Pinole, CA 94564 Fax (510) 222-6418
Lockwood, Andrews & Newnam, Inc. A LEA & AALI COMPANY
T-Y-LIN INTERNATIONAL

SUBMITTED _____
APPROVED _____

VTA BART SILICON VALLEY
BART SILICON VALLEY BERRYESSA EXTENSION

LINE, TRACK, STATIONS AND SYSTEMS
DESIGN UNIT 023
MILPITAS STATION
CONCOURSE SECTIONS AND DETAILS
SHEET 8 OF 10

CADD FILENAME C700-S-DB-S648.dwg
SIZE D | SCALE AS NOTED
CONTRACT NO. C700 | REV. 0
AREA CODE DB | SHEET NO. S648 | PAGE NO. 0224

cad-02 Jul 05, 2013 - 1:54pm P:\BART Berryessa Extension Line\S - STRUCTURAL MILPITAS\WORK_6-10-2012\C700-S-DB-S648.dwg

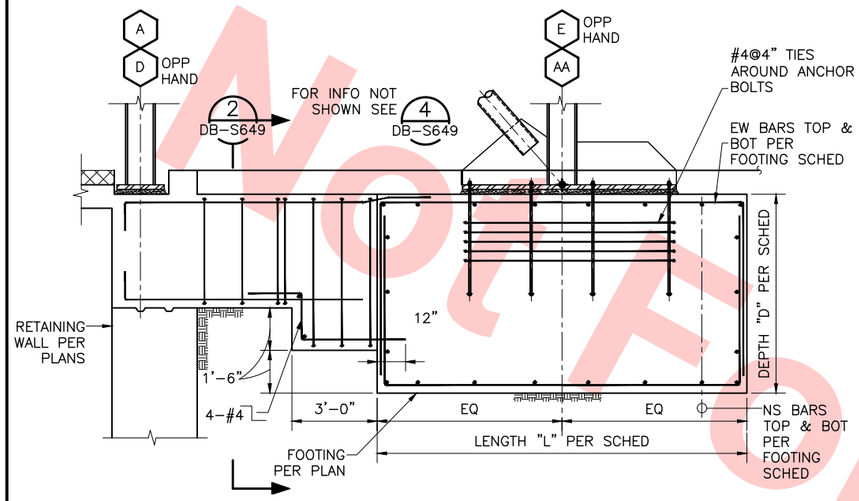

SECTION @ FOOTING
F10 – GRID 7
SCALE: 3/8"=1'–0"
1 DB–S649 DB–S750

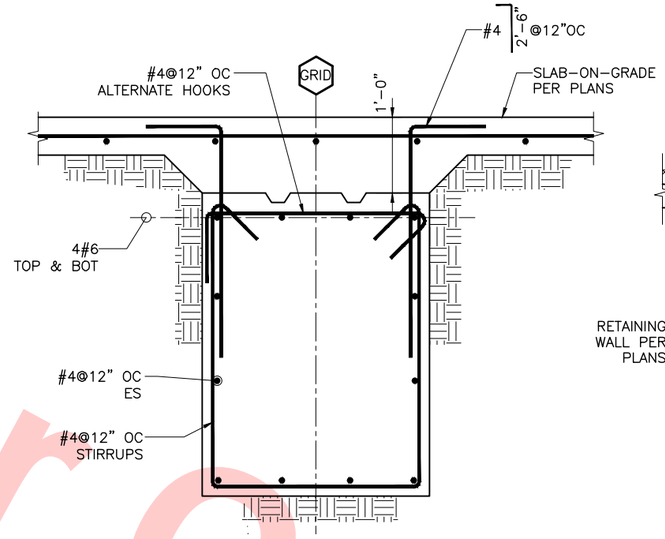

SECTION
SCALE: 1"=1'–0"
2 DB–S649 DB–S649

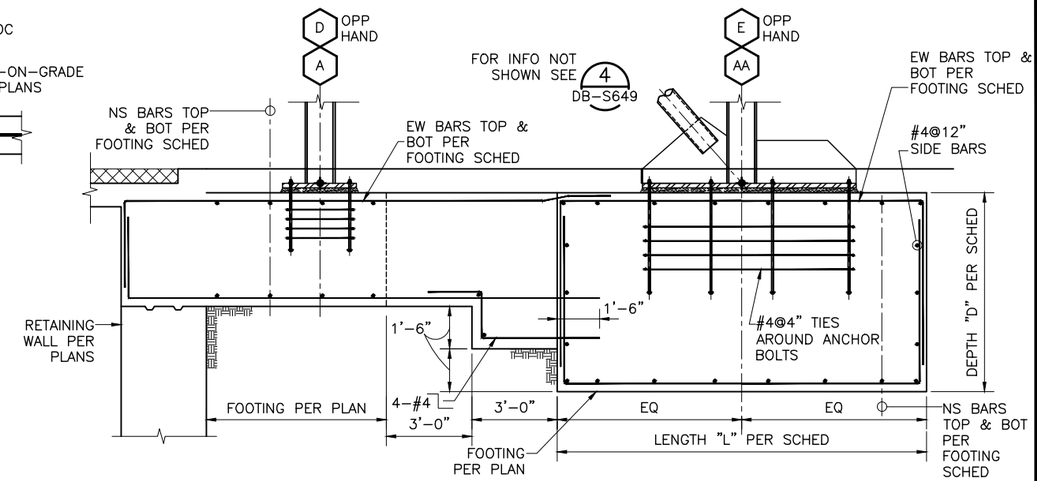

SECTION @ FOOTING
F10 – GRID 10
SCALE: 3/8"=1'–0"
3 DB–S649 DB–S212 DB–S750

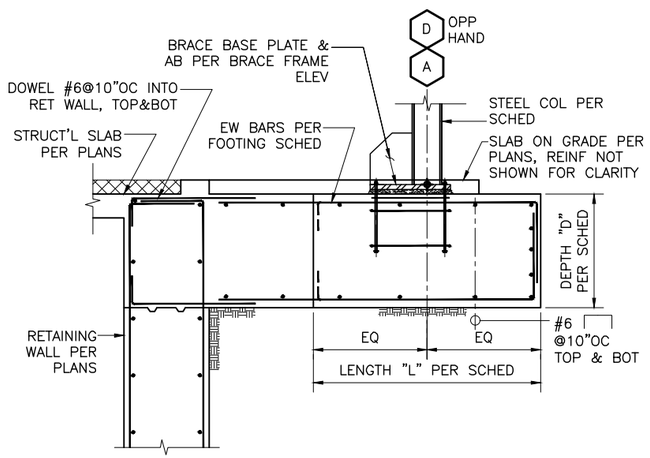

SECTION @ FOOTING
F9
SCALE: 3/8"=1'–0"
4 DB–S649 DB–S750

Santa Clara Valley Transportation Authority

____NO EXCEPTIONS TAKEN (NET)
____MAKE CORRECTIONS NOTED (MCN)
____AMEND AND RESUBMIT (A/R)

Any action shown above is subject to the terms of the contract and does not relieve the Contractor of any of its obligations under the contract, including design and detailing.

Contract No.: DB11002F

By: _____ Date: _____

Not For Construction

REV	DATE	BY	SUB	APP	DESCRIPTION
0	20130710				READINESS FOR CONSTRUCTION

DESIGNED BY J. REBER, S.E.
DRAWN BY P. DIAZ
CHECKED BY M. TARAZI
IN CHARGE M. TARAZI
DATE 20130710

REGISTERED PROFESSIONAL ENGINEER SOHAM FUAD VORA S-3185 EXP. 6/30/14 STRUCTURAL STATE OF CALIFORNIA

Skanska Shimmick Herzog
1436 California Circle
Milpitas, California 95035
A Joint Venture

MFT Consulting Engineers, Inc. Anil Verma Associates, Inc.
1773 San Pablo Ave., Suite A3 (510) 222-4106
Pinole, CA 94564 Fax (510) 222-4118
SUBMITTED

Lockwood, Andrews & Newnam, Inc. A LAN & BALL COMPANY
T·Y·LIN INTERNATIONAL
APPROVED

BART SILICON VALLEY
BART SILICON VALLEY BERRYESSA EXTENSION

LINE, TRACK, STATIONS AND SYSTEMS
DESIGN UNIT 023
MILPITAS STATION
CONCOURSE SECTIONS
AND DETAILS
SHEET 9 OF 10

CADD FILENAME C700–S–DB–S649.dwg
SIZE D | SCALE AS NOTED
CONTRACT NO. C700 | REV. 0
AREA CODE DB | SHEET NO. S649 | PAGE NO. 0225

cad–02 Jul 05, 2013 – 1:55pm P:\BART Berryessa Extension Line\S – STRUCTURAL MILPITAS\WORK_6–10–2012\C700–S–DB–S649.dwg

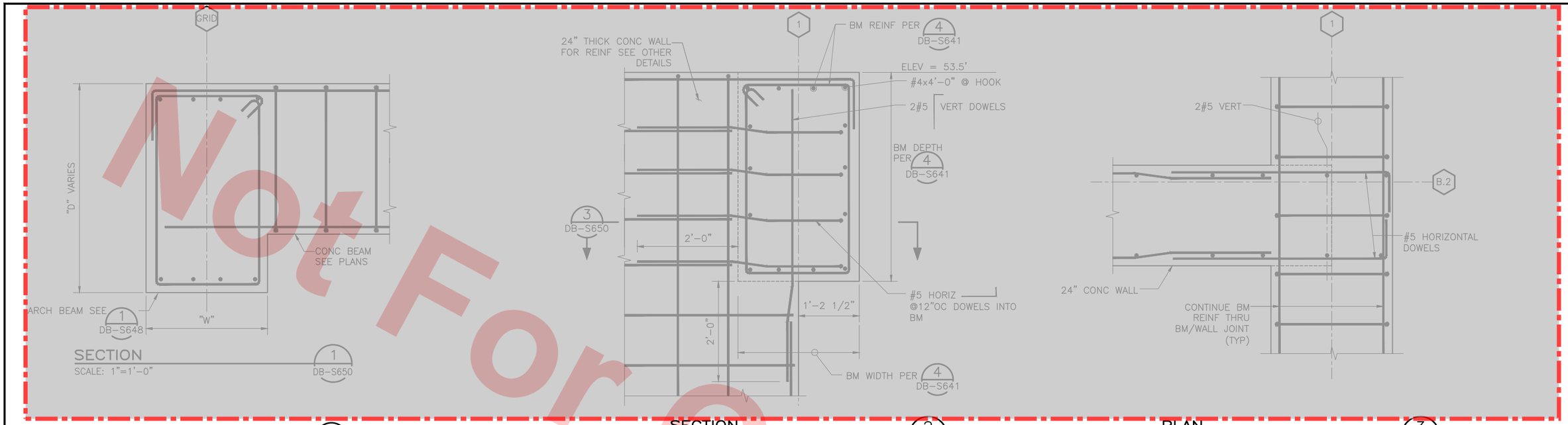

SECTION
SCALE: 1"=1'-0"
2 DB-S650 DB-S121 DB-S720

PLAN
SCALE: 1"=1'-0"
3 DB-S650 DB-S650

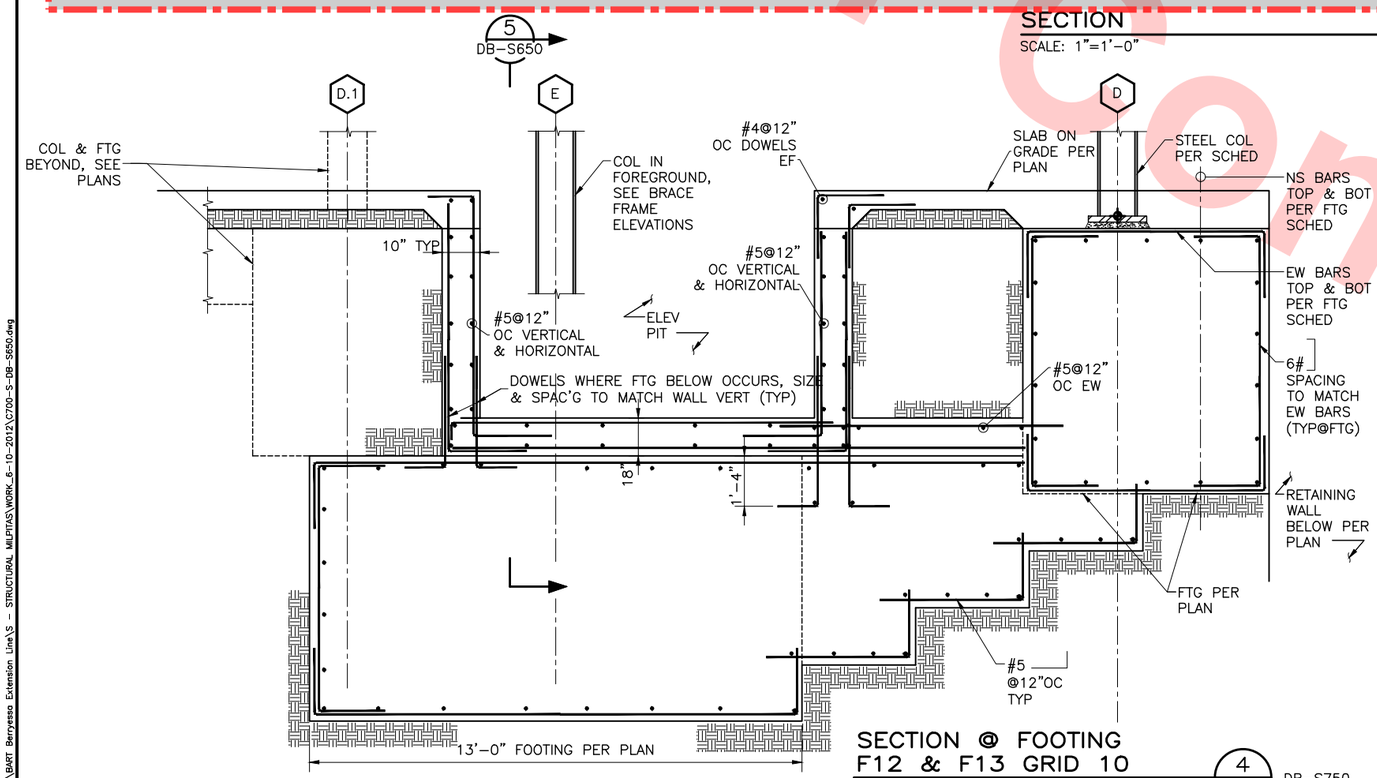

SECTION @ FOOTING
F12 & F13 GRID 10
SCALE: 1/2"=1'-0"
4 DB-S650 DB-S750

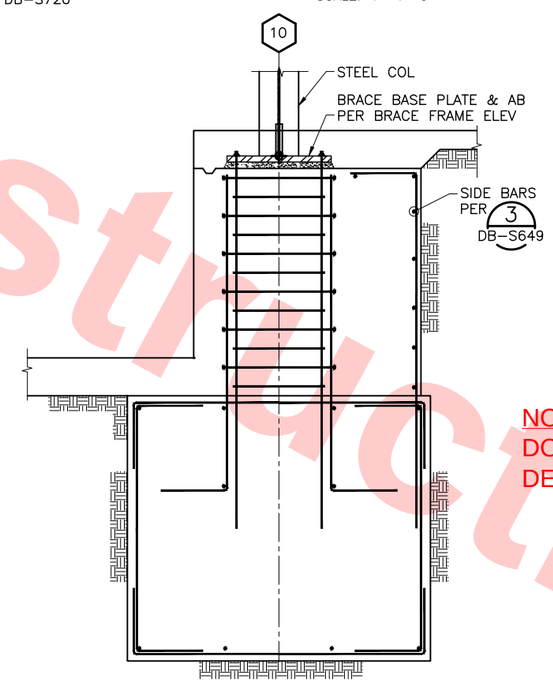

SECTION
SCALE: 1/2"=1'-0"
5 DB-S650 DB-S650

Santa Clara Valley Transportation Authority

____NO EXCEPTIONS TAKEN (NET)
____MAKE CORRECTIONS NOTED (MCN)
____AMEND AND RESUBMIT (A/R)

Any action shown above is subject to the terms of the contract and does not relieve the Contractor of any of its obligations under the contract, including design and detailing.

Contract No.: DB11002F

By: _____ Date: _____

NOTE TO REVIEWER(S):
DO NOT REVIEW AREAS DESIGNATED AS

Not For Construction

REV	DATE	BY	SUB	APP	DESCRIPTION
0	20130710				READINESS FOR CONSTRUCTION
0	20130531				READINESS FOR CONSTRUCTION

DESIGNED BY J. REBER, S.E.
DRAWN BY P. DIAZ
CHECKED BY M. TARAZI
IN CHARGE M. TARAZI
DATE 20130710

REGISTERED PROFESSIONAL ENGINEER SOHAM PUAD # S-3185 EXP. 6/30/14 STRUCTURAL STATE OF CALIFORNIA

Skanska Shimmick Herzog
1436 California Circle
Milpitas, California 95035
A Joint Venture

MFT Consulting Engineers, Inc. Anil Verma Associates, Inc.
1773 San Pablo Ave., Suite A3 (510) 222-4106
Pinole, CA 94564 Fax (510) 222-4110

Leakwood, Andrews & Newnam, Inc. A LAN & BALY COMPANY
T·Y·LIN INTERNATIONAL

SUBMITTED _____ APPROVED _____

VTA BART SILICON VALLEY
BART SILICON VALLEY BERRYESSA EXTENSION

LINE, TRACK, STATIONS AND SYSTEMS
DESIGN UNIT 023
MILPITAS STATION
CONCOURSE SECTIONS AND DETAILS
SHEET 10 OF 10

CADD FILENAME C700-S-DB-S650.dwg
SIZE D | SCALE AS NOTED
CONTRACT NO. C700 | REV. 0
AREA CODE DB | SHEET NO. S650 | PAGE NO. 0226

cad-02 Jul 05, 2013 - 1:55pm P:\BART Berryessa Extension Line\S - STRUCTURAL MILPITAS\WORK_6-10-2012\C700-S-DB-S650.dwg

Santa Clara Valley Transportation Authority

____NO EXCEPTIONS TAKEN (NET)
____MAKE CORRECTIONS NOTED (MCN)
____AMEND AND RESUBMIT (A/R)

Any action shown above is subject to the terms of the contract and does not relieve the Contractor of any of its obligations under the contract, including design and detailing.

Contract No.: DB11002F

By: _____ Date: _____

Not For Construction

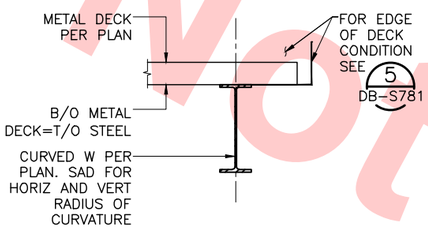

DETAIL 1 DB-S681 DB-S141
SCALE: 1"=1'-0"

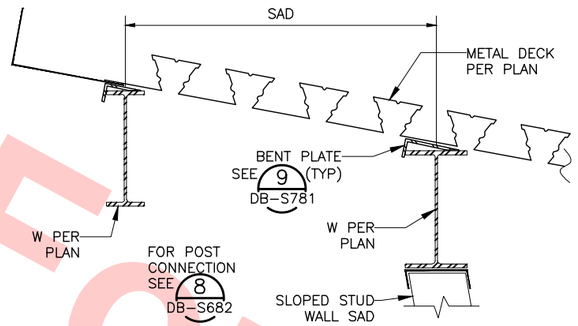

DETAIL 2 DB-S681 DB-S141
SCALE: 1 1/2"=1'-0"

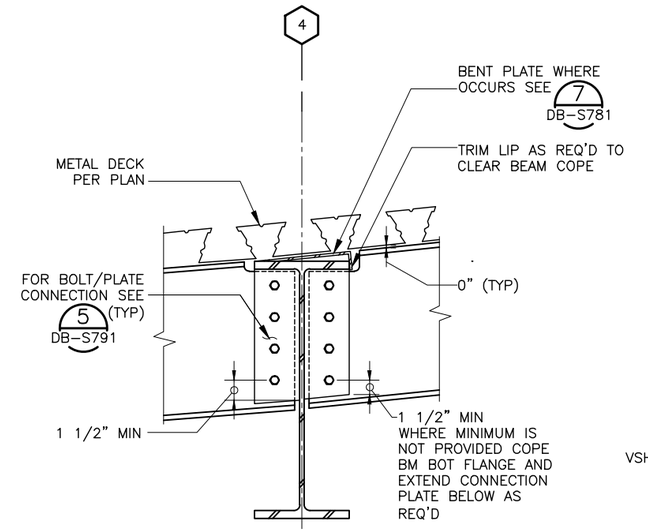

DETAIL 3 DB-S681 DB-S141
SCALE: 1 1/2"=1'-0"

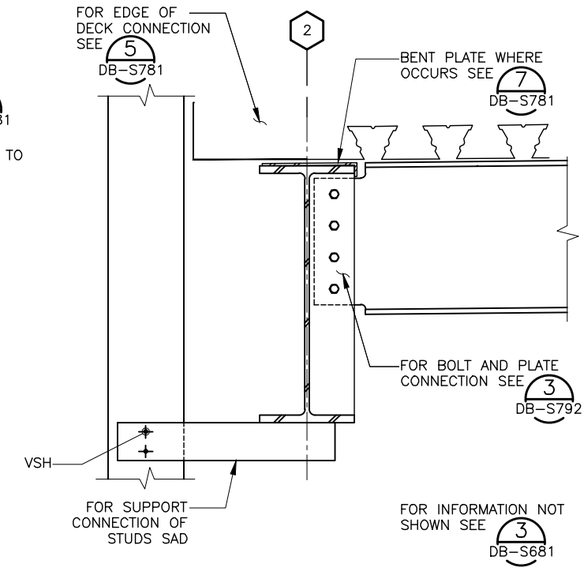

DETAIL 4 DB-S681 DB-S141
SCALE: 1 1/2"=1'-0"

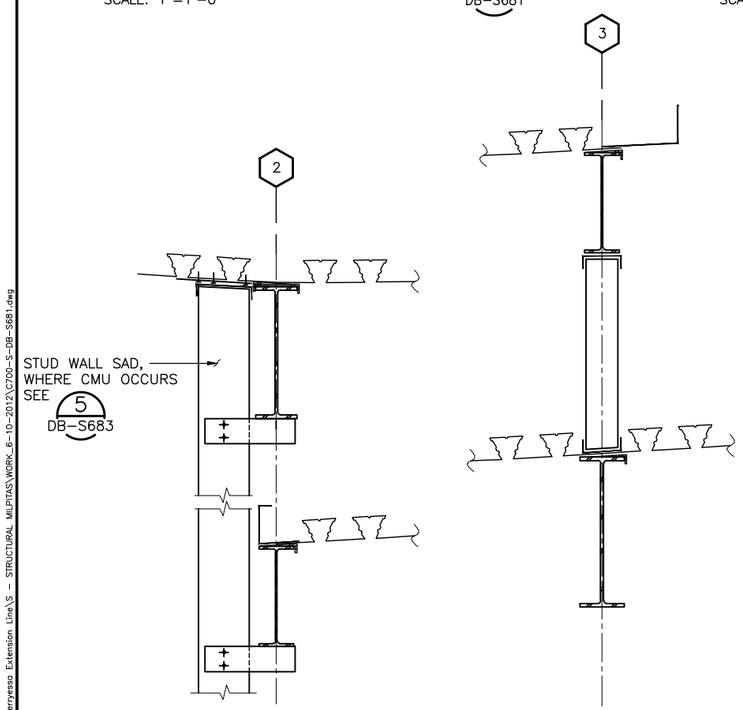

SECTION 5 DB-S681 DB-S141
SCALE: 1"=1'-0"

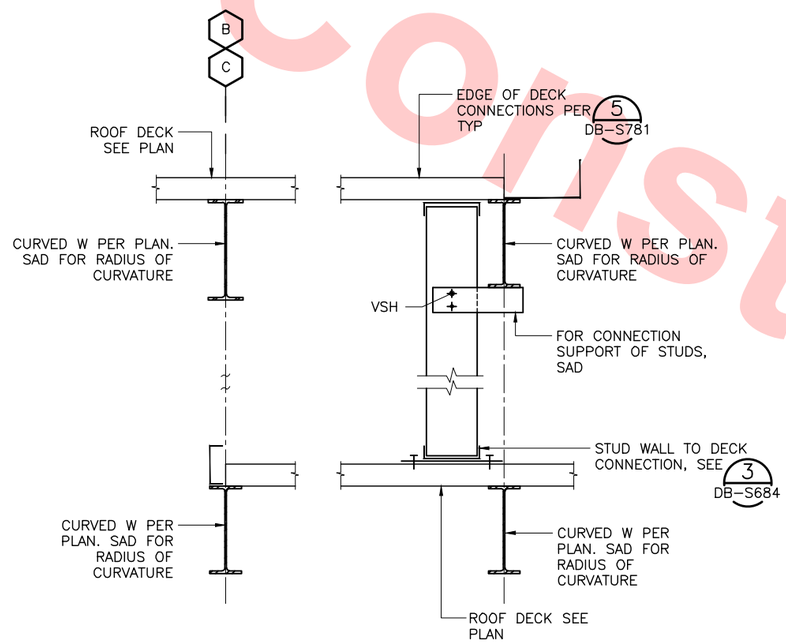

SECTION 6 DB-S681 DB-S141
SCALE: 1"=1'-0"

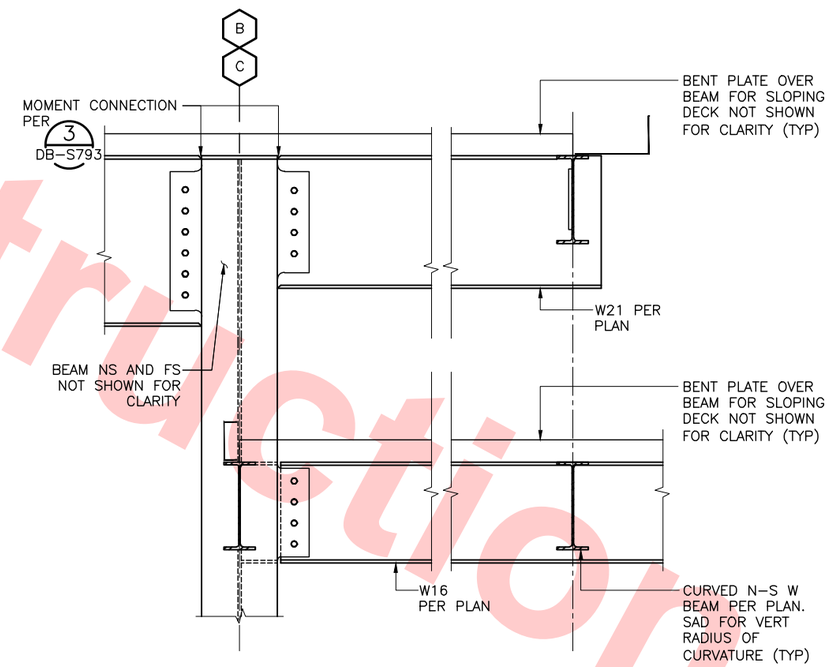

SECTION 7 DB-S681 DB-S141
SCALE: 1"=1'-0"

REV	DATE	BY	SUB	APP	DESCRIPTION
0	20130710				READINESS FOR CONSTRUCTION

DESIGNED BY J. REBER, S.E.
DRAWN BY P. DIAZ
CHECKED BY M. TARAZI
IN CHARGE M. TARAZI
DATE 20130710

REGISTERED PROFESSIONAL ENGINEER SOMAN FUAD TAZI # S-3185 EXP. 6/30/14 STRUCTURAL STATE OF CALIFORNIA

Skanska Shimmick Herzog
1436 California Circle
Milpitas, California 95035
A Joint Venture

MFT Consulting Engineers, Inc. Anil Verma Associates, Inc.
1773 San Pablo Ave., Suite A3 (510) 222-4106
Pinole, CA 94564 Fax (510) 222-5115

SUBMITTED

Lockwood, Andrews & Newnam, Inc. A CH2M HILL COMPANY
T-Y-LIN INTERNATIONAL

APPROVED

BART SILICON VALLEY
BART SILICON VALLEY BERRYESSA EXTENSION

LINE, TRACK, STATIONS AND SYSTEMS
DESIGN UNIT 023
MILPITAS STATION
DETAILS

SHEET 1 OF 17

CADD FILENAME C700-S-DB-S681.dwg
SIZE D | SCALE AS NOTED
CONTRACT NO. C700 | REV. 0
AREA CODE DB | SHEET NO. S681 | PAGE NO. 0227

cad-02 Jul 05, 2013 - 1:55pm P:\BART Berryessa Extension Line\S - STRUCTURAL MILPITAS\WORK_6-10-2012\C700-S-DB-S681.dwg

Santa Clara Valley Transportation Authority

____NO EXCEPTIONS TAKEN (NET)
____MAKE CORRECTIONS NOTED (MCN)
____AMEND AND RESUBMIT (A/R)

Any action shown above is subject to the terms of the contract and does not relieve the Contractor of any of its obligations under the contract, including design and detailing.

Contract No.: DB11002F

By: _____ Date: _____

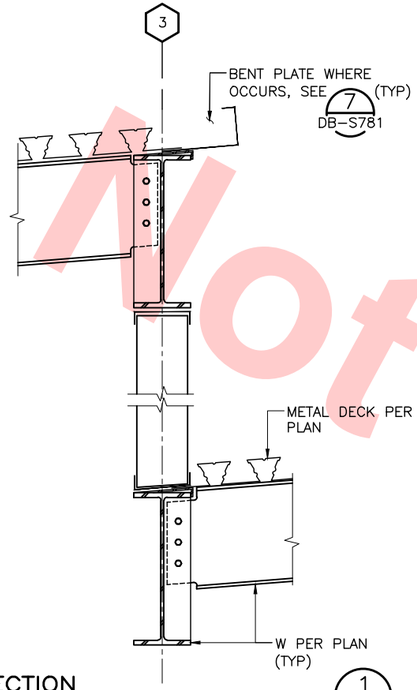

SECTION 1 DB-S682 DB-S141
SCALE: 1"=1'-0"

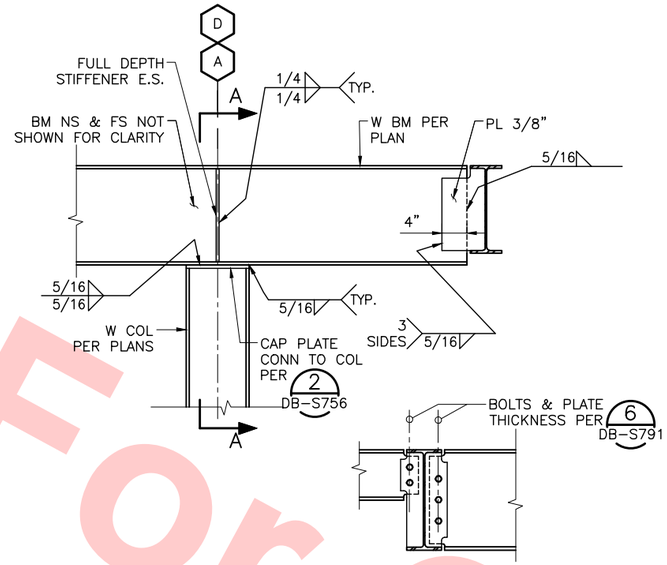

SECTION 2 DB-S682 DB-S141
SCALE: 1"=1'-0"

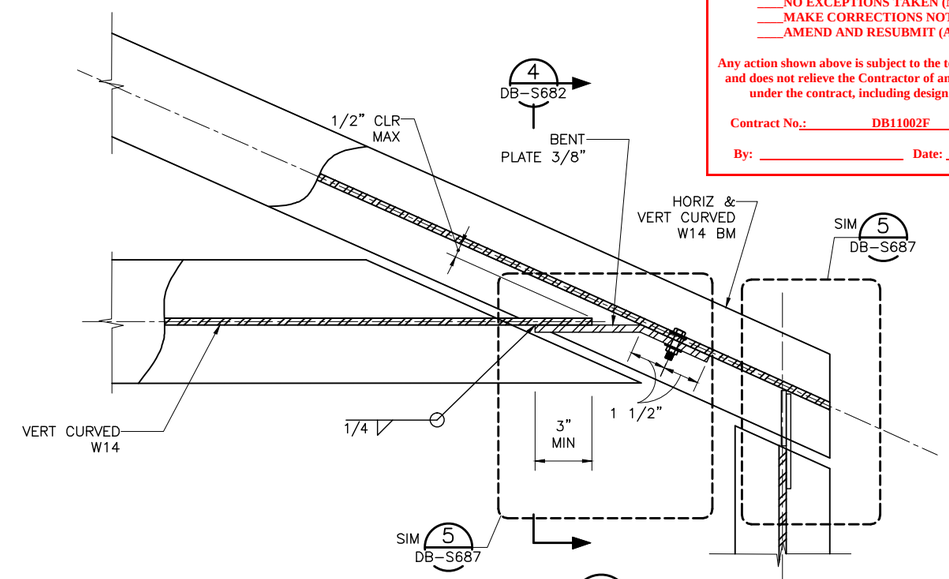

DETAIL 3 DB-S682 DB-S146
SCALE: 3"=1'-0"

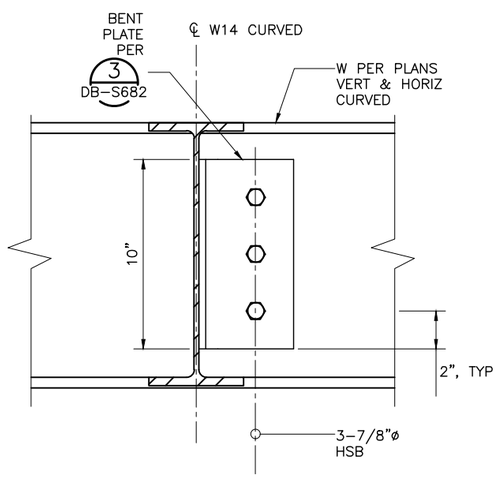

SECTION 4 DB-S682 DB-S682
SCALE: 3"=1'-0"

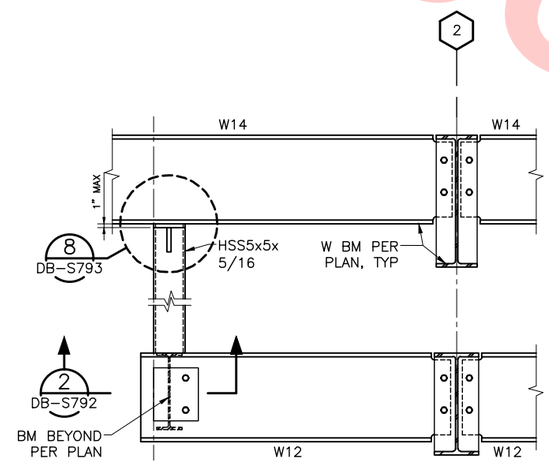

SECTION 5 DB-S682 DB-S141
SCALE: 1"=1'-0"

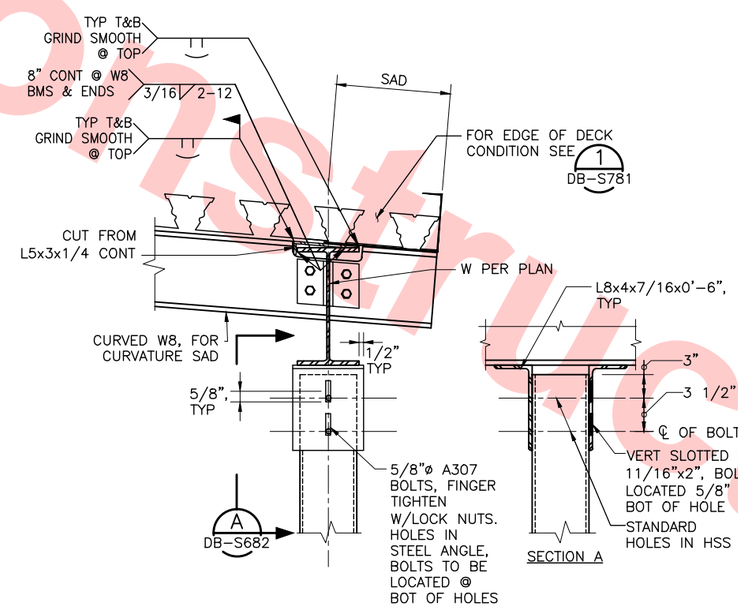

SECTION 7 DB-S682 DB-S141
SCALE: 1 1/2"=1'-0"

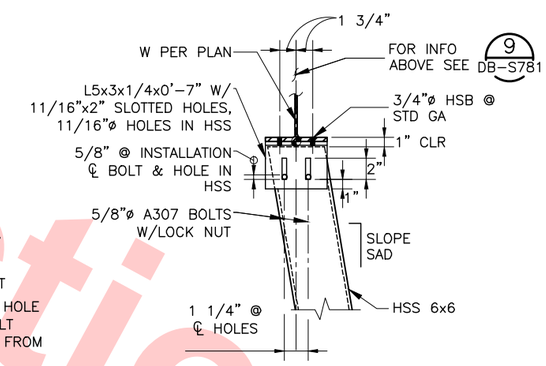

DETAIL 8 DB-S682 DB-S141 DB-S681
SCALE: 1 1/2"=1'-0"

Not For Construction

REV	DATE	BY	SUB	APP	DESCRIPTION
0	20130710				READINESS FOR CONSTRUCTION

DESIGNED BY J. REBER, S.E.
DRAWN BY P. DIAZ
CHECKED BY M. TARAZI
IN CHARGE M. TARAZI
DATE 20130710

REGISTERED PROFESSIONAL ENGINEER SOHAM FUAD TARAZI # S-3185 EXP. 6/30/14 STRUCTURAL STATE OF CALIFORNIA

Skanska Shimmick Herzog
1436 California Circle Milpitas, California 95035
A Joint Venture

MFT Consulting Engineers, Inc. Anil Verma Associates, Inc. 1773 San Pablo Ave., Suite A3 Pinole, CA 94564 (510) 222-4106 Fax (510) 222-5418
SUBMITTED

Lockwood, Andrews & Newnam, Inc. A LAN & BALT COMPANY
T-Y-LIN INTERNATIONAL
APPROVED

VTA. BART SILICON VALLEY
BART SILICON VALLEY BERRYESSA EXTENSION

LINE, TRACK, STATIONS AND SYSTEMS DESIGN UNIT 023
MILPITAS STATION
DETAILS
SHEET 2 OF 17

CADD FILENAME C700-S-DB-S682.dwg
SIZE D | SCALE AS NOTED
CONTRACT NO. C700 | REV. 0
AREA CODE DB | SHEET NO. S682 | PAGE NO. 0228

cad-02 Jul 05, 2013 - 1:55pm P:\BART Berryessa Extension Line\S - STRUCTURAL MILPITAS\WORK_6-10-2012\C700-S-DB-S682.dwg

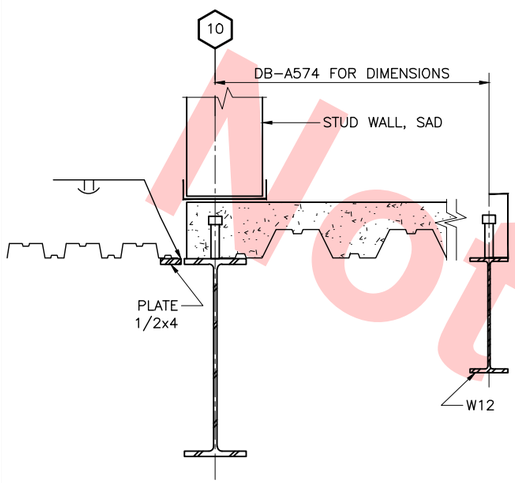

DETAIL 1 DB-S683 DB-S132
SCALE: 1 1/2"=1'-0"

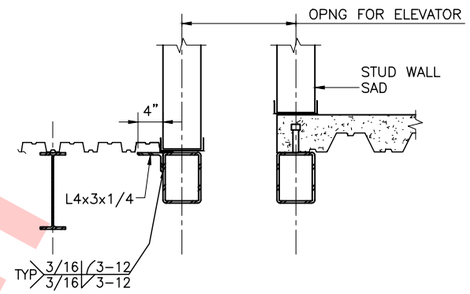

SECTION 2 DB-S683 DB-S132
SCALE: 1"=1'-0"

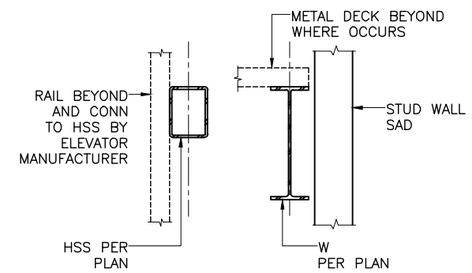

DETAIL 3 DB-S683 DB-S135
SCALE: 1"=1'-0"

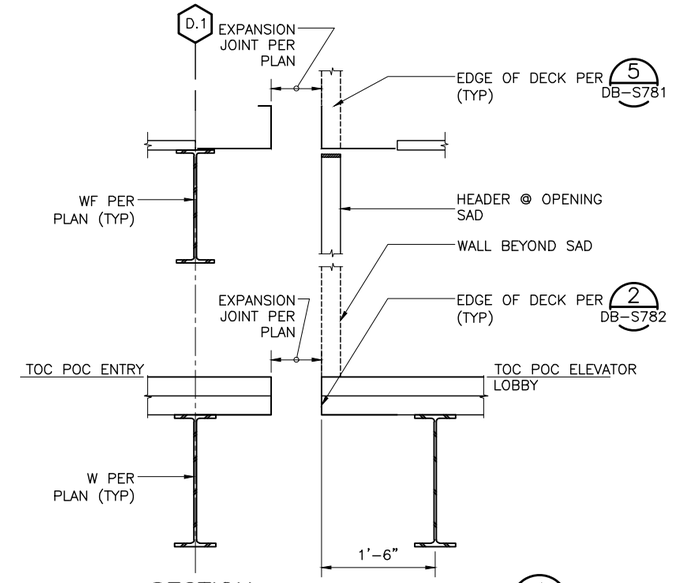

SECTION 4 DB-S683 DB-S132
SCALE: 1"=1'-0"

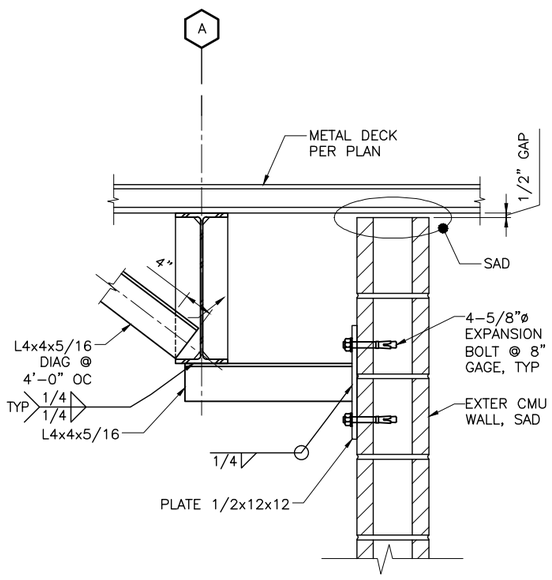

DETAIL 5 DB-S683 DB-S141
SCALE: 1 1/2"=1'-0"

Not For Construction

Santa Clara Valley Transportation Authority

____NO EXCEPTIONS TAKEN (NET)
____MAKE CORRECTIONS NOTED (MCN)
____AMEND AND RESUBMIT (A/R)

Any action shown above is subject to the terms of the contract and does not relieve the Contractor of any of its obligations under the contract, including design and detailing.

Contract No.: DB11002F

By: _____ Date: _____

REV	DATE	BY	SUB	APP	DESCRIPTION
0	20130710				READINESS FOR CONSTRUCTION

DESIGNED BY J. REBER, S.E.
DRAWN BY P. DIAZ
CHECKED BY M. TARAZI
IN CHARGE M. TARAZI
DATE 20130710

REGISTERED PROFESSIONAL ENGINEER SOHAIL FUAD ALI-TOMA S-3185 EXP. 6/30/14 STRUCTURAL STATE OF CALIFORNIA

Skanska Shimmick Herzog
1436 California Circle
Milpitas, California 95035
A Joint Venture

MFT Consulting Engineers, Inc. Anil Verma Associates, Inc.
1773 San Pablo Ave., Suite A3
Pinole, CA 94564
(510) 222-4106
Fax (510) 222-5415
SUBMITTED

Lockwood, Andrews & Newnam, Inc. A LEO A DALY COMPANY
T-Y-LIN INTERNATIONAL
APPROVED

BART SILICON VALLEY BERRYESSA EXTENSION

LINE, TRACK, STATIONS AND SYSTEMS
DESIGN UNIT 023
MILPITAS STATION
DETAILS

SHEET 3 OF 17

CADD FILENAME C700-S-DB-S683.dwg
SIZE D | SCALE AS NOTED
CONTRACT NO. C700 | REV. 0
AREA CODE DB | SHEET NO. S683 | PAGE NO. 0229

cad-02 Jul 05, 2013 - 1:55pm P:\BART Berryessa Extension Line\S - STRUCTURAL MILPITAS\WORK_6-10-2012\C700-S-DB-S683.dwg

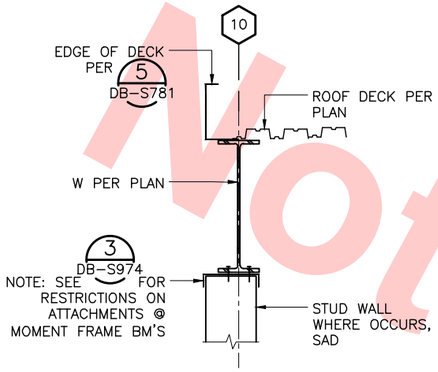

DETAIL 1 DB-S684 DB-S149
SCALE: 1"=1'-0"

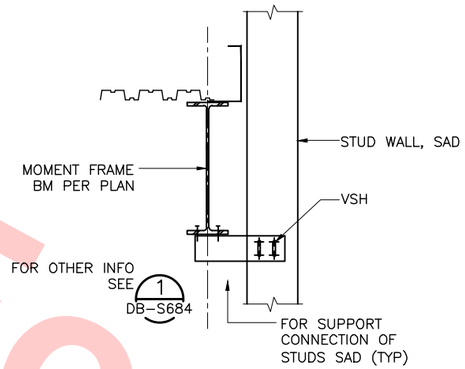

DETAIL 2 DB-S684 DB-S149
SCALE: 1"=1'-0"

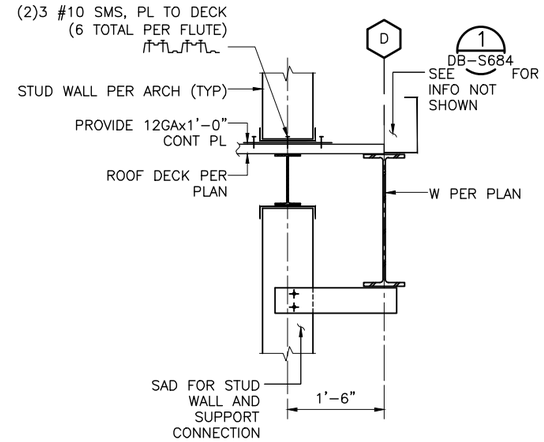

DETAIL 3 DB-S684 DB-S149
SCALE: 1"=1'-0"

Not For Construction

Santa Clara Valley Transportation Authority

____NO EXCEPTIONS TAKEN (NET)
____MAKE CORRECTIONS NOTED (MCN)
____AMEND AND RESUBMIT (A/R)

Any action shown above is subject to the terms of the contract and does not relieve the Contractor of any of its obligations under the contract, including design and detailing.

Contract No.: DB11002F

By: _____ Date: _____

REV	DATE	BY	SUB	APP	DESCRIPTION
0	20130710				READINESS FOR CONSTRUCTION

DESIGNED BY J. REBER, S.E.
DRAWN BY P. DIAZ
CHECKED BY M. TARAZI
IN CHARGE M. TARAZI
DATE 20130710

REGISTERED PROFESSIONAL ENGINEER SOHAN FUAD VERMA # S-3185 EXP. 6/30/14 STRUCTURAL STATE OF CALIFORNIA

Skanska Shimmick Herzog
1436 California Circle
Milpitas, California 95035
A Joint Venture

MFT CONSULTING ENGINEERS, INC. Anil Verma Associates, Inc.
1773 San Pablo Ave., Suite A3 (510) 222-4106
Pinole, CA 94564 Fax (510) 222-4116
SUBMITTED

Lockwood, Andrews & Newnam, Inc. A LEO A DALY COMPANY
T·Y·LIN INTERNATIONAL
APPROVED

BART SILICON VALLEY
BART SILICON VALLEY BERRYESSA EXTENSION

LINE, TRACK, STATIONS AND SYSTEMS
DESIGN UNIT 023
MILPITAS STATION
DETAILS

SHEET 4 OF 17

CADD FILENAME C700-S-DB-S684.dwg
SIZE D | SCALE AS NOTED
CONTRACT NO. C700 | REV. 0
AREA CODE DB | SHEET NO. S684 | PAGE NO. 0230

cad-02 Jul 05, 2013 - 1:55pm P:\BART Berryessa Extension Line\S - STRUCTURAL MILPITAS\WORK_6-10-2012\C700-S-DB-S684.dwg

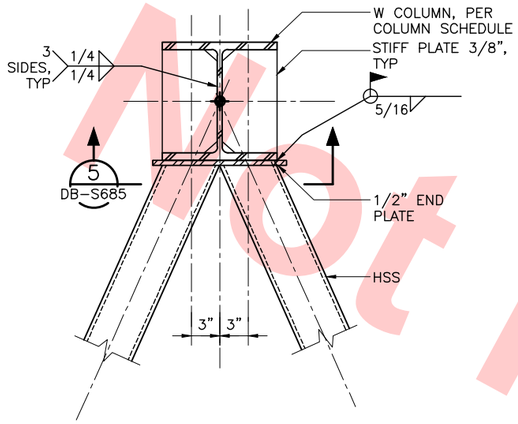

DETAIL PLAN 1 DB-S685 DB-S132
SCALE: 1 1/2"=1'-0"

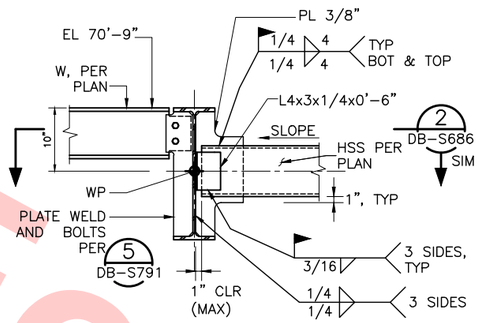

DETAIL 2 DB-S685 DB-S132
SCALE: 1"=1'-0"

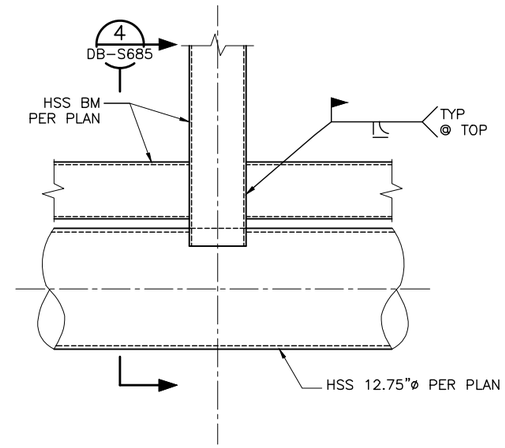

DETAIL PLAN 3 DB-S685 DB-S132
SCALE: 1 1/2"=1'-0"

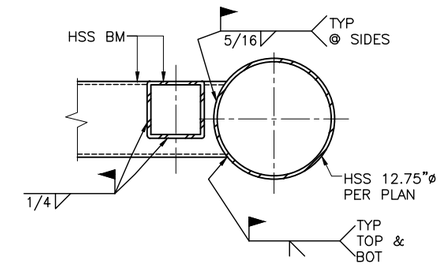

SECTION DETAIL 4 DB-S685 DB-S685
SCALE: 1 1/2"=1'-0"

Santa Clara Valley Transportation Authority

____NO EXCEPTIONS TAKEN (NET)
____MAKE CORRECTIONS NOTED (MCN)
____AMEND AND RESUBMIT (A/R)

Any action shown above is subject to the terms of the contract and does not relieve the Contractor of any of its obligations under the contract, including design and detailing.

Contract No.: DB11002F

By: _____ Date: _____

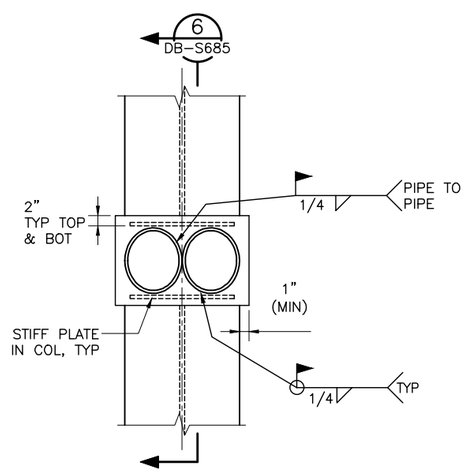

DETAIL 5 DB-S685 DB-S685
SCALE: 1 1/2"=1'-0"

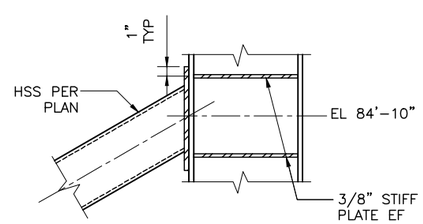

SECTION 6 DB-S685 DB-S685
SCALE: 1 1/2"=1'-0"

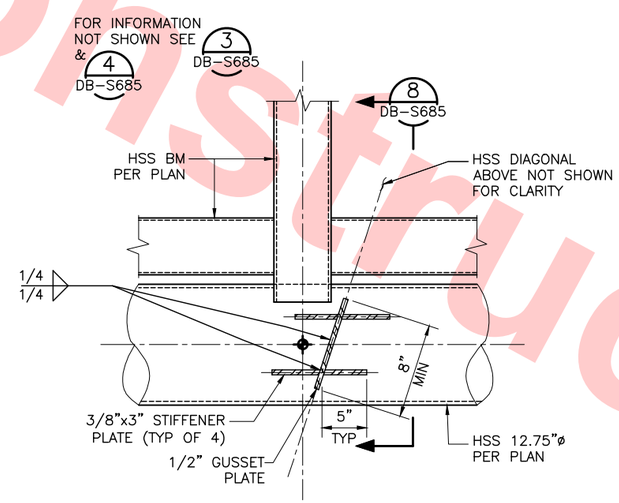

DETAIL PLAN 7 DB-S685 DB-S132
SCALE: 1 1/2"=1'-0"

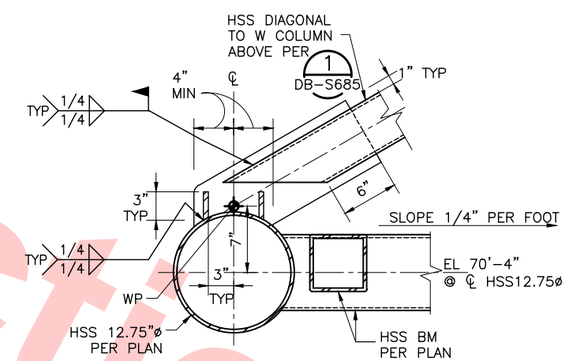

SECTION DETAIL 8 DB-S685 DB-S685
SCALE: 1 1/2"=1'-0"

Not For Construction

REV	DATE	BY	SUB	APP	DESCRIPTION
0	20130710				READINESS FOR CONSTRUCTION

DESIGNED BY J. REBER, S.E.
DRAWN BY P. DIAZ
CHECKED BY M. TARAZI
IN CHARGE M. TARAZI
DATE 20130710

REGISTERED PROFESSIONAL ENGINEER SOHAIL FUAD TAHA S-3185 EXP.6/30/14 STRUCTURAL STATE OF CALIFORNIA

Skanska Shimmick Herzog
1436 California Circle
Milpitas, California 95035
A Joint Venture

MFT Consulting Engineers, Inc. Anil Verma Associates, Inc.
1773 San Pablo Ave., Suite A3 (510) 222-4106
Pinole, CA 94564 Fax (510) 222-4618
SUBMITTED

Lockwood, Andrews & Newnam, Inc. A LINA A. RALY COMPANY
T-Y-LIN INTERNATIONAL
APPROVED

BART SILICON VALLEY
BART SILICON VALLEY BERRYESSA EXTENSION

LINE, TRACK, STATIONS AND SYSTEMS
DESIGN UNIT 023
MILPITAS STATION
DETAILS

SHEET 5 OF 17

CADD FILENAME C700-S-DB-S685.dwg
SIZE D SCALE AS NOTED
CONTRACT NO. C700 REV. 0
AREA CODE DB SHEET NO. S685 PAGE NO. 0231

cad-02 Jul 05, 2013 - 1:55pm P:\BART Berryessa Extension Line\S - STRUCTURAL MILPITAS\WORK_6-10-2012\C700-S-DB-S685.dwg

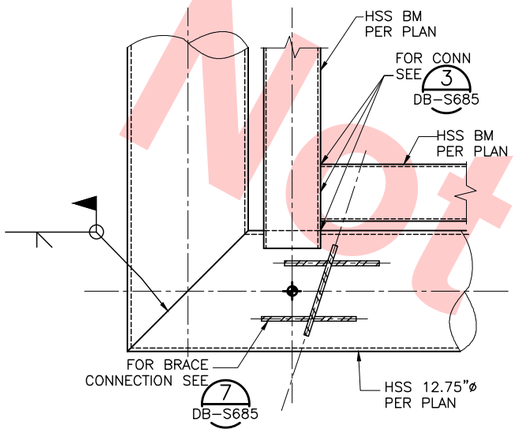

DETAIL PLAN (1 / DB-S686) — DB-S132
SCALE: 1 1/2"=1'-0"

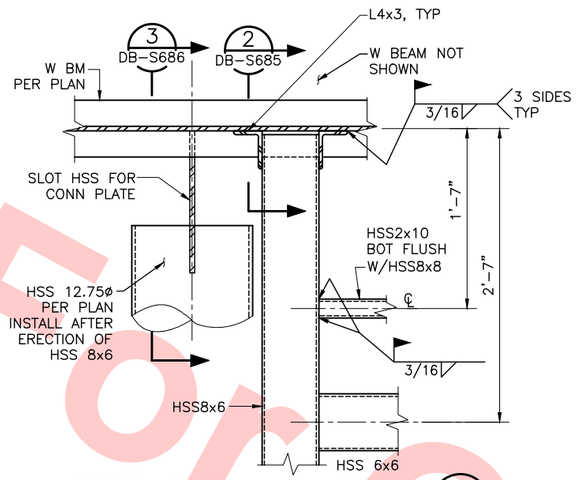

DETAIL PLAN (2 / DB-S686) — DB-S132, DB-S212, DB-S685
SCALE: 1 1/2"=1'-0"

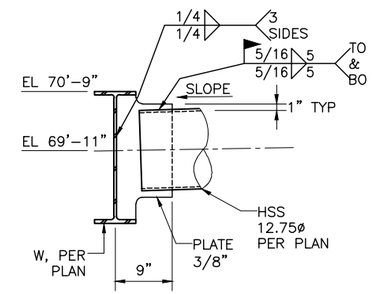

DETAIL (3 / DB-S686) — DB-S686
SCALE: 1"=1'-0"

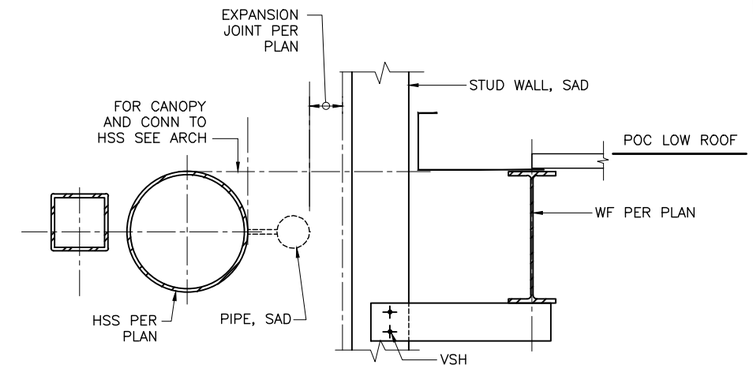

DETAIL (4 / DB-S686) — DB-S132
SCALE: 1 1/2"=1'-0"

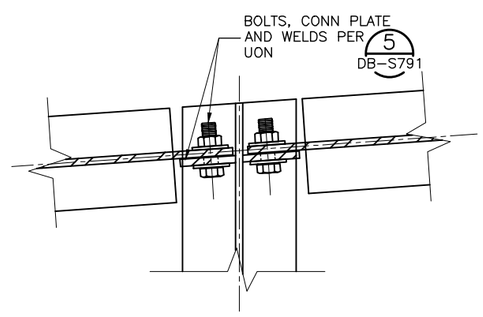

SECTION (6 / DB-S686) — DB-S141, DB-S142, DB-S131, DB-S132, DB-S686
SCALE: 3"=1'-0"

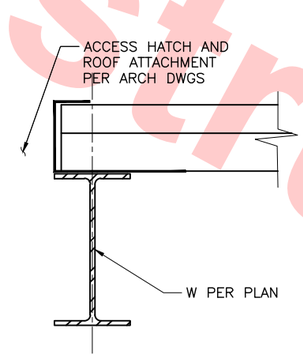

DETAIL (7 / DB-S686) — DB-S142, DB-S143, DB-S144, DB-S145
SCALE: 3"=1'-0"

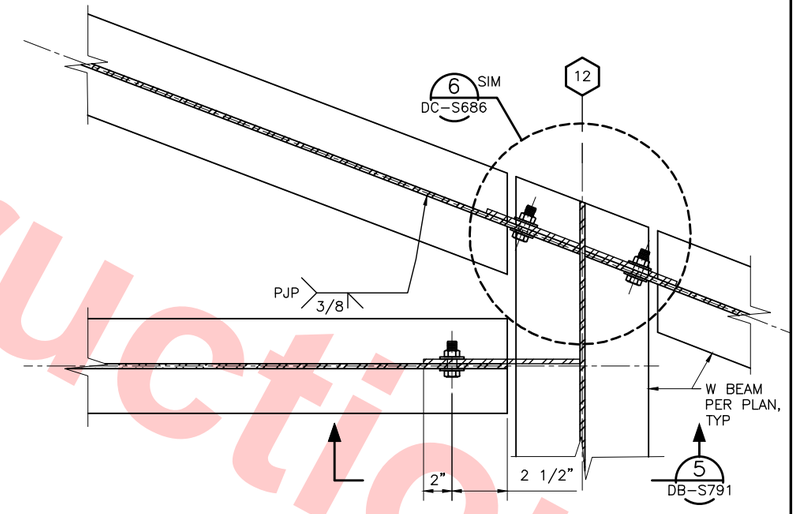

DETAIL (8 / DB-S686) — DB-S145, DB-S144
SCALE: 3"=1'-0"

Santa Clara Valley Transportation Authority

____NO EXCEPTIONS TAKEN (NET)
____MAKE CORRECTIONS NOTED (MCN)
____AMEND AND RESUBMIT (A/R)

Any action shown above is subject to the terms of the contract and does not relieve the Contractor of any of its obligations under the contract, including design and detailing.

Contract No.: DB11002F

By: _____ Date: _____

REV	DATE	BY	SUB	APP	DESCRIPTION
0	20130710				READINESS FOR CONSTRUCTION

DESIGNED BY J. REBER, S.E.
DRAWN BY P. DIAZ
CHECKED BY M. TARAZI
IN CHARGE M. TARAZI
DATE 20130710

PROFESSIONAL ENGINEER — SOHAM FUAD TARAZI — # S-3185 EXP. 6/30/14 — STRUCTURAL — STATE OF CALIFORNIA

Skanska Shimmick Herzog
1436 California Circle
Milpitas, California 95035
A Joint Venture

MFT Consulting Engineers, Inc. — 1773 San Pablo Ave., Suite A3, Pinole, CA 94564 — (510) 222-4106, Fax (510) 222-6418
Anil Verma Associates, Inc.
Leakwood, Andrews & Newnam, Inc. — A LAN & BALY COMPANY
T-Y-LIN INTERNATIONAL

SUBMITTED
APPROVED

BART SILICON VALLEY
BART SILICON VALLEY BERRYESSA EXTENSION

LINE, TRACK, STATIONS AND SYSTEMS
DESIGN UNIT 023
MILPITAS STATION
DETAILS

SHEET 6 OF 17

CADD FILENAME: C700-S-DB-S686.dwg
SIZE: D — SCALE: AS NOTED
CONTRACT NO.: C700 — REV.: 0
AREA CODE: DB — SHEET NO.: S686 — PAGE NO.: 0232

Not For Construction

cad-02 Jul 05, 2013 - 1:55pm P:\BART Berryessa Extension Line\S - STRUCTURAL MILPITAS\WORK_6-10-2012\C700-S-DB-S686.dwg

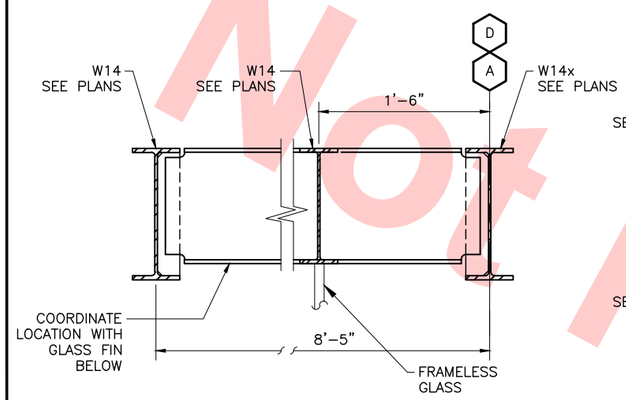

DETAIL 1 DB-S687
SCALE: 1 1/2"=1'-0"
DB-S142
DB-S143
DB-S144
DB-S145

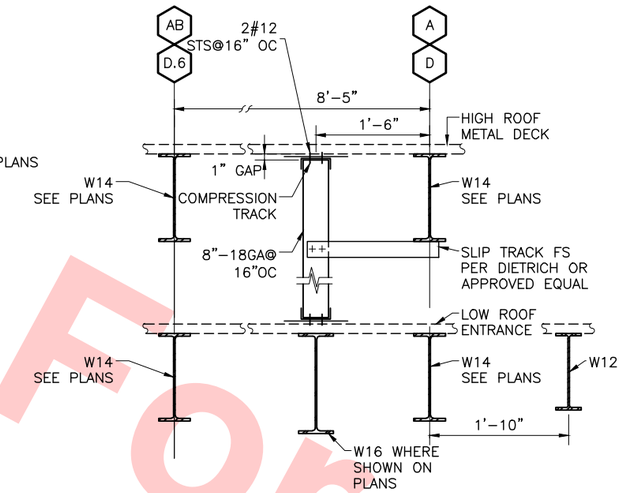

SECTION 2 DB-S687
SCALE: 1"=1'-0"
DB-S131
DB-S132
DB-S142
DB-S143
DB-S144
DB-S145

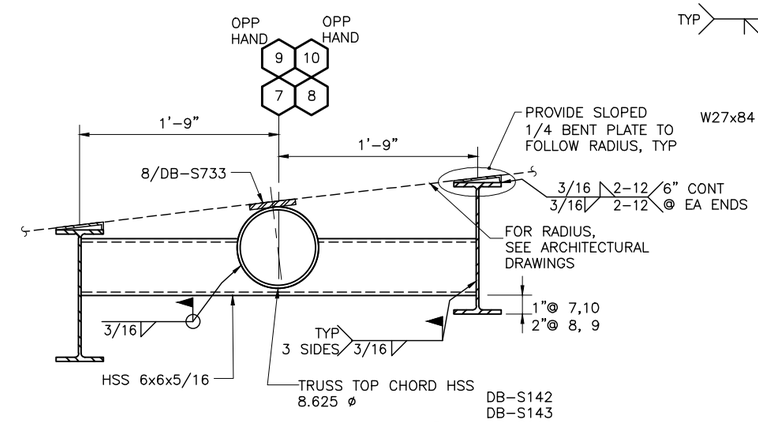

SECTION 3 DB-S687
SCALE: 1 1/2"=1'-0"
DB-S142
DB-S143
DB-S144
DB-S145
DB-S731

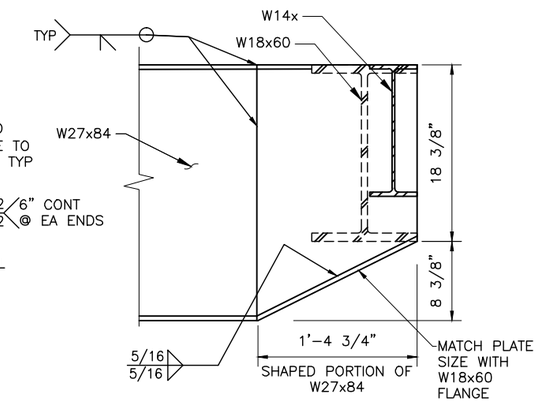

SECTION 4 DB-S687
SCALE: 1 1/2"=1'-0"
DB-S146

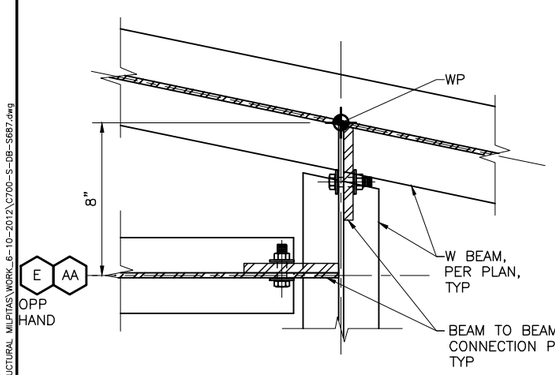

DETAIL 5 DB-S687
SCALE: 3"=1'-0"
DB-S131
DB-S132

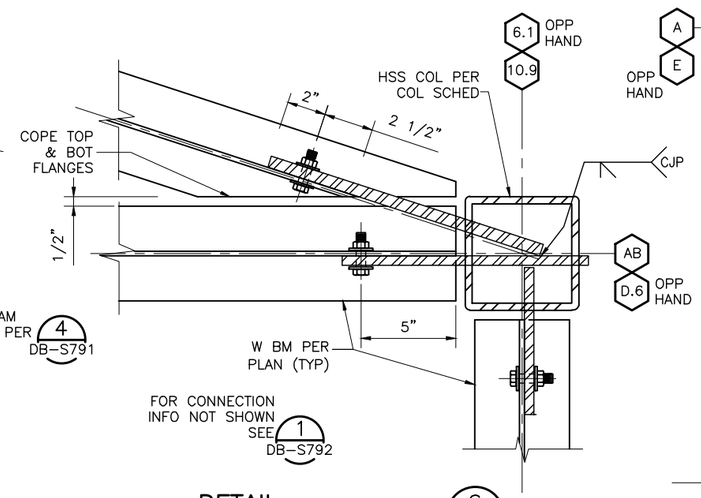

DETAIL 6 DB-S687
SCALE: 3"=1'-0"
DB-S131
DB-S132

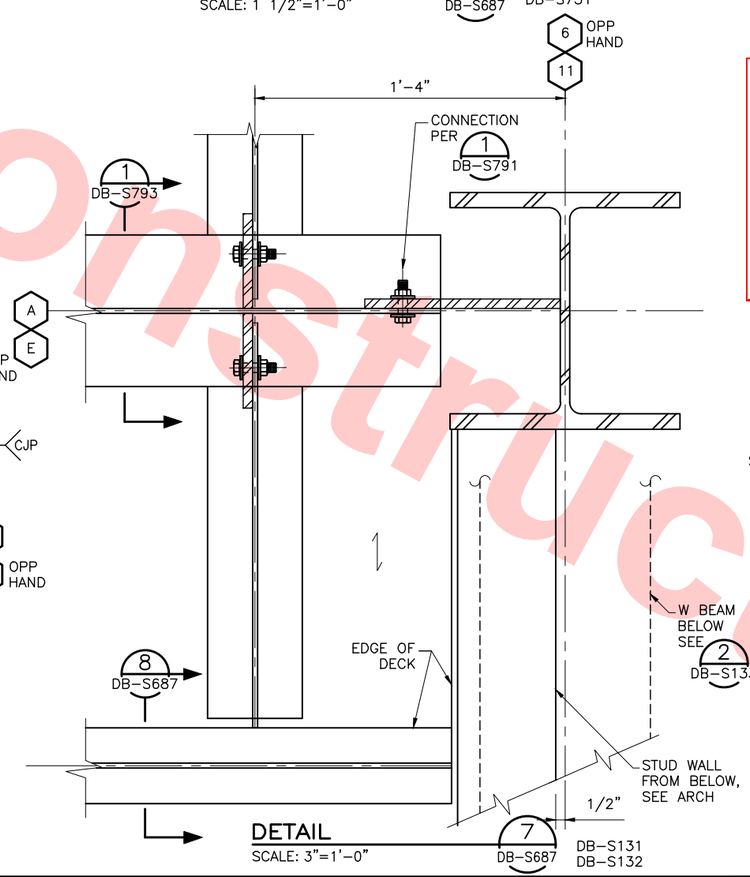

DETAIL 7 DB-S687
SCALE: 3"=1'-0"
DB-S131
DB-S132

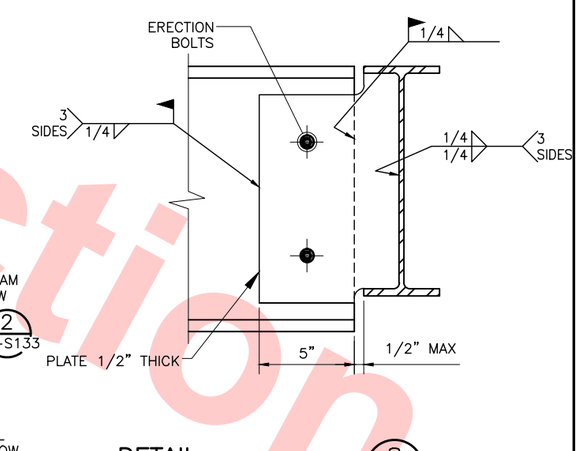

DETAIL 8 DB-S687
SCALE: 3"=1'-0"
DB-S687

Santa Clara Valley Transportation Authority

____NO EXCEPTIONS TAKEN (NET)
____MAKE CORRECTIONS NOTED (MCN)
____AMEND AND RESUBMIT (A/R)

Any action shown above is subject to the terms of the contract and does not relieve the Contractor of any of its obligations under the contract, including design and detailing.

Contract No.: DB11002F

By: _____ Date: _____

Not For Construction

REV	DATE	BY	SUB	APP	DESCRIPTION
0	20130710				READINESS FOR CONSTRUCTION

DESIGNED BY J. REBER, S.E.
DRAWN BY P. DIAZ
CHECKED BY M. TARAZI
IN CHARGE M. TARAZI
DATE 20130710

REGISTERED PROFESSIONAL ENGINEER SIGNAL FUAD # S-5185 EXP. 6/30/14 STRUCTURAL STATE OF CALIFORNIA

Skanska Shimmick Herzog
1436 California Circle
Milpitas, California 95035
A Joint Venture

MFT Consulting Engineers, Inc. Anil Verma Associates, Inc.
1773 San Pablo Ave., Suite A3 (510) 222-4106
Pinole, CA 94564 Fax (510) 222-5418

Lockwood, Andrews & Newnam, Inc. A LAN & NAV COMPANY
T·Y·LIN INTERNATIONAL

SUBMITTED _____ APPROVED _____

VTA BART SILICON VALLEY
BART SILICON VALLEY BERRYESSA EXTENSION

LINE, TRACK, STATIONS AND SYSTEMS
DESIGN UNIT 023
MILPITAS STATION
DETAILS

SHEET 7 OF 17

CADD FILENAME C700-S-DB-S687.dwg
SIZE D | SCALE AS NOTED
CONTRACT NO. C700 | REV. 0
AREA CODE DB | SHEET NO. S687 | PAGE NO. 0233

cad-02 Jul 05, 2013 - 1:55pm P:\BART Berryessa Extension Line\S - STRUCTURAL MILPITAS\WORK_6-10-2012\C700-S-DB-S687.dwg

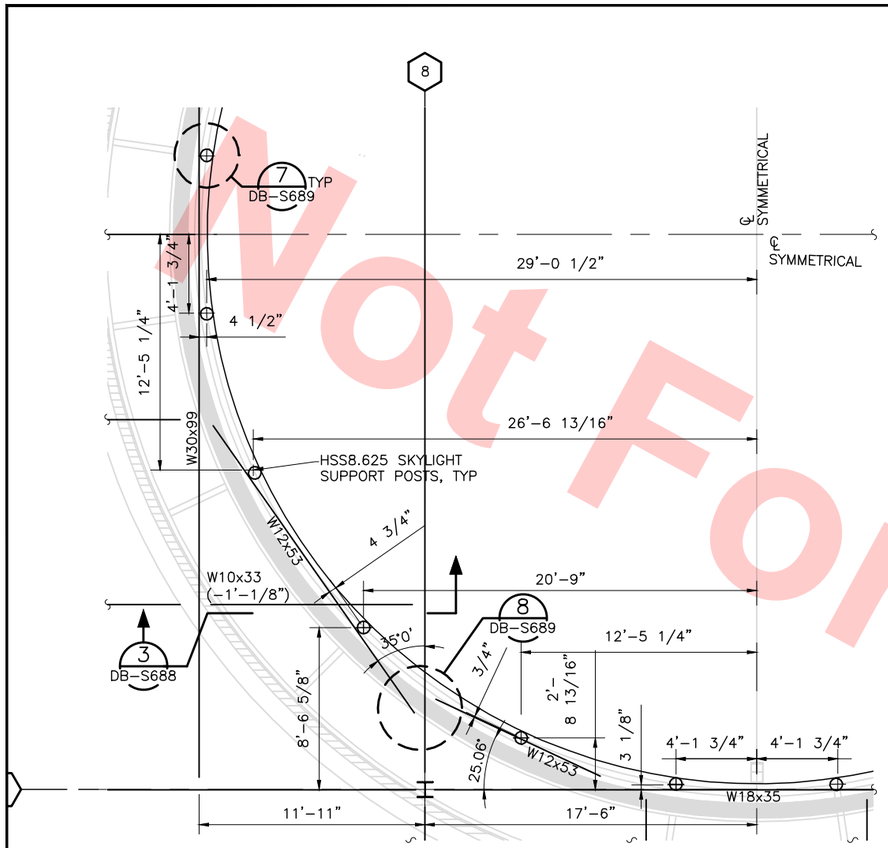

PLAN SKYLIGHT #2 (1 / DB-S688)
SCALE: 1/4"=1'-0"
DB-S144
DB-S145

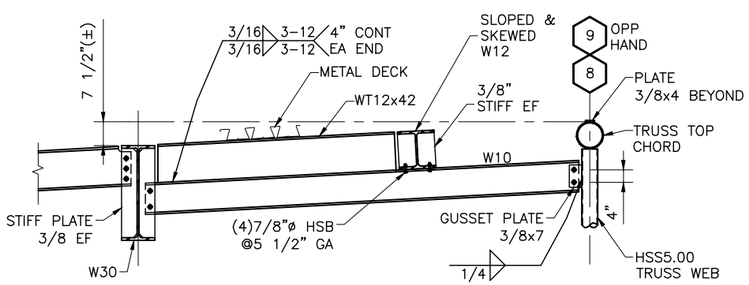

NOTE:
FOR TYPICAL BEAM CONNECTION SEE (5 / DB-S691)

SECTION (3 / DB-S688)
SCALE: 1/2"=1'-0"
DB-S144
DB-S688

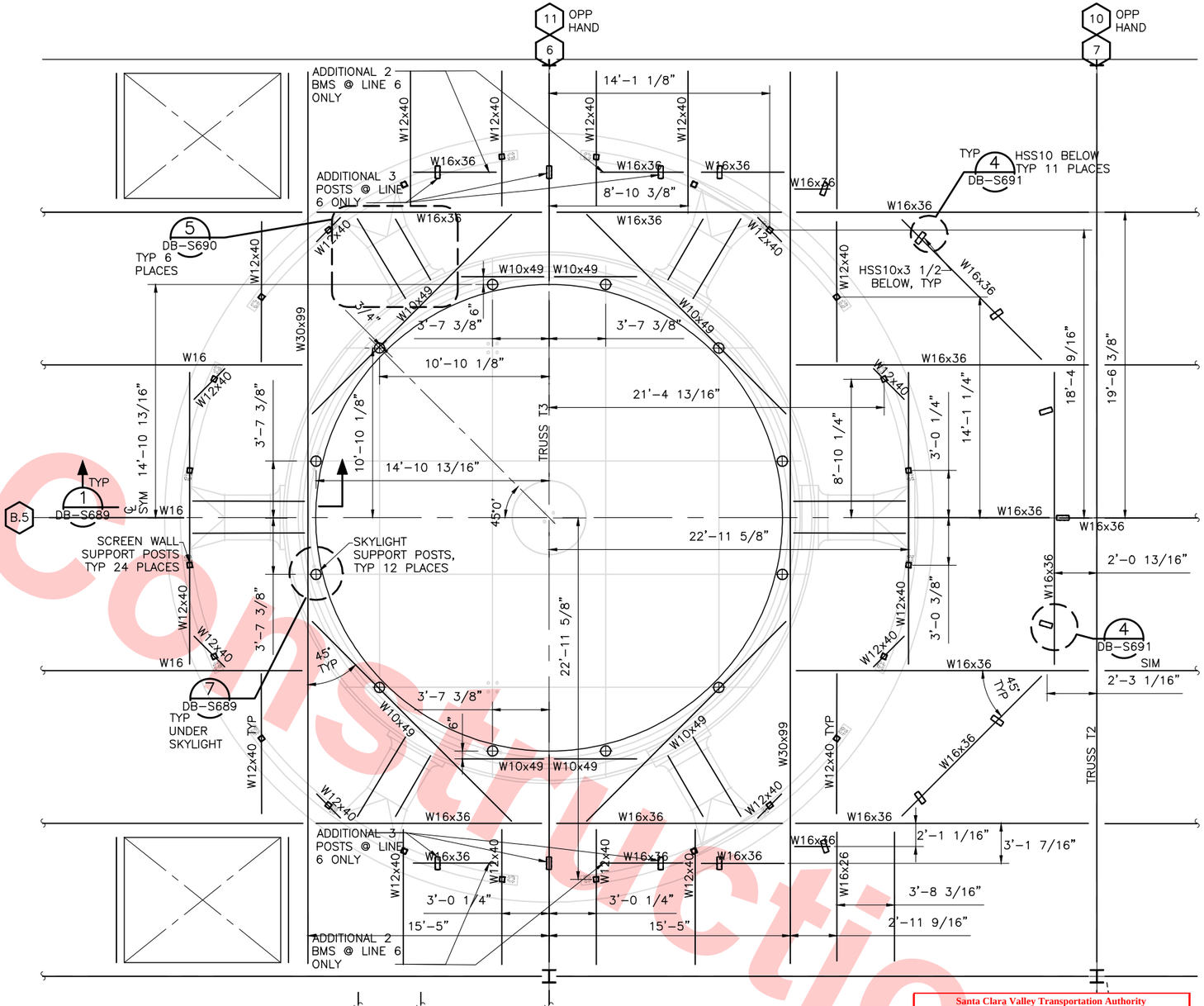

PLAN SKYLIGHT #1 & #3 (2 / DB-S688)
SCALE: 1/4"=1'-0"
DB-S142
DB-S143
DB-S144
DB-S145

Santa Clara Valley Transportation Authority

____NO EXCEPTIONS TAKEN (NET)
____MAKE CORRECTIONS NOTED (MCN)
____AMEND AND RESUBMIT (A/R)

Any action shown above is subject to the terms of the contract and does not relieve the Contractor of any of its obligations under the contract, including design and detailing.

Contract No.: DB11002F

By: _____ Date: _____

Not For Construction

REV	DATE	BY	SUB	APP	DESCRIPTION
0	20130710				READINESS FOR CONSTRUCTION

DESIGNED BY J. REBER, S.E.
DRAWN BY P. DIAZ
CHECKED BY M. TARAZI
IN CHARGE M. TARAZI
DATE 20130710

REGISTERED PROFESSIONAL ENGINEER SOHAIL FIJAD $-3185 EXP.6/30/14 STRUCTURAL STATE OF CALIFORNIA

Skanska Shimmick Herzog
1436 California Circle Milpitas, California 95035
A Joint Venture

MFT Consulting Engineers, Inc. Anil Verma Associates, Inc. 1773 San Pablo Ave., Suite A3 Pinole, CA 94564 (510) 222-4106 Fax (510) 222-6418
SUBMITTED

Lockwood, Andrews & Newnam, Inc. A LINA A. RAAT COMPANY T-Y-LIN INTERNATIONAL
APPROVED

VTA BART SILICON VALLEY
BART SILICON VALLEY BERRYESSA EXTENSION

LINE, TRACK, STATIONS AND SYSTEMS
DESIGN UNIT 023
MILPITAS STATION
DETAILS

SHEET 8 OF 17

CADD FILENAME C700-S-DB-S688.dwg
SIZE D | SCALE AS NOTED
CONTRACT NO. C700 | REV. 0
AREA CODE DB | SHEET NO. S688 | PAGE NO. 0234

cad-02 Jul 05, 2013 - 1:55pm P:\BART Berryessa Extension Line\S - STRUCTURAL, MILPITAS\WORK_6-10-2012\C700-S-DB-S688.dwg

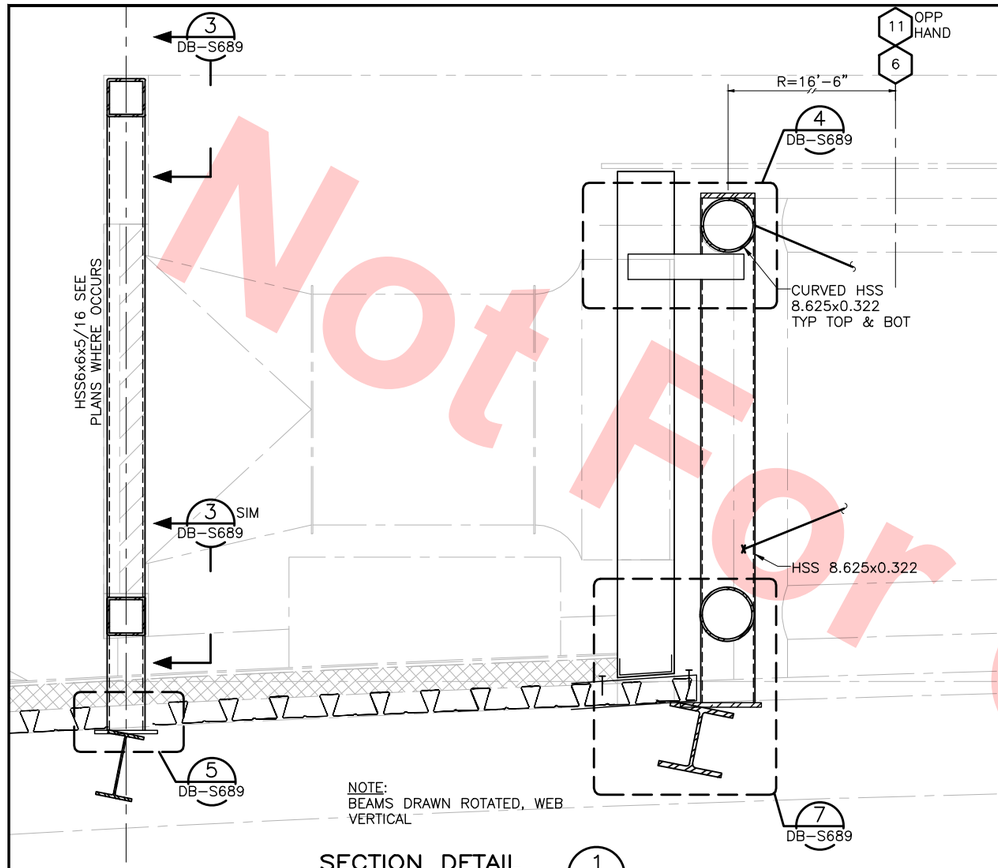

NOTE:
BEAMS DRAWN ROTATED, WEB VERTICAL

SECTION DETAIL 1 DB-S689
SCALE: 1"=1'-0"
DB-S142
DB-S143
DB-S144
DB-S145

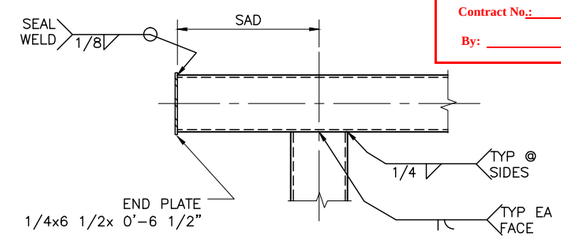

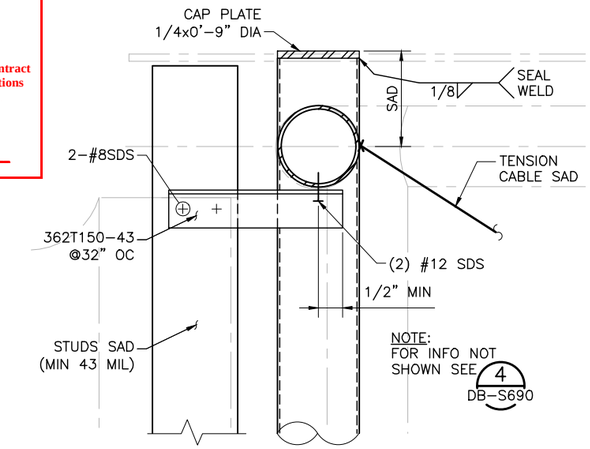

SECTION 3 DB-S689
SCALE: 1 1/2"=1'-0"
DB-S689

DETAIL 4 DB-S689
SCALE: 1 1/2"=1'-0"
DB-S689

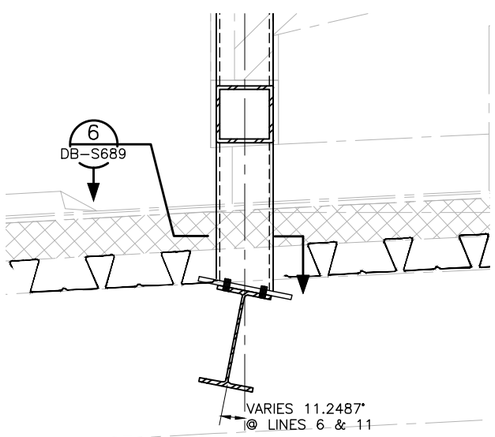

DETAIL 5 DB-S689
SCALE: 1 1/2"=1'-0"

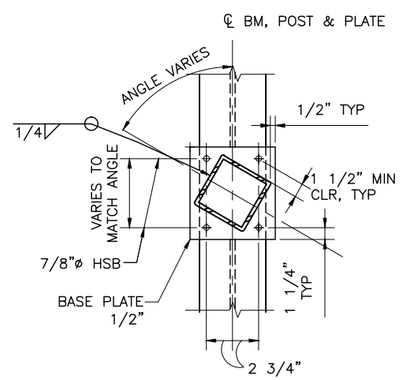

DETAIL 6 DB-S689
SCALE: 1 1/2"=1'-0"

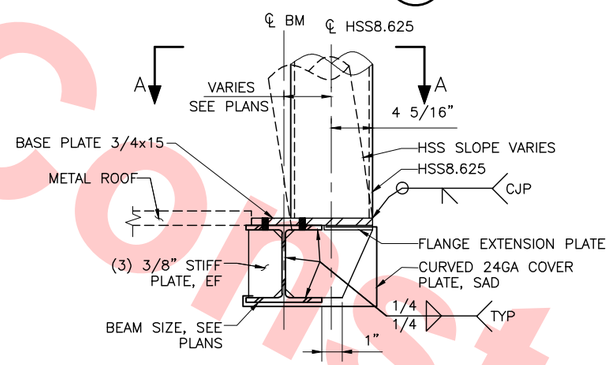

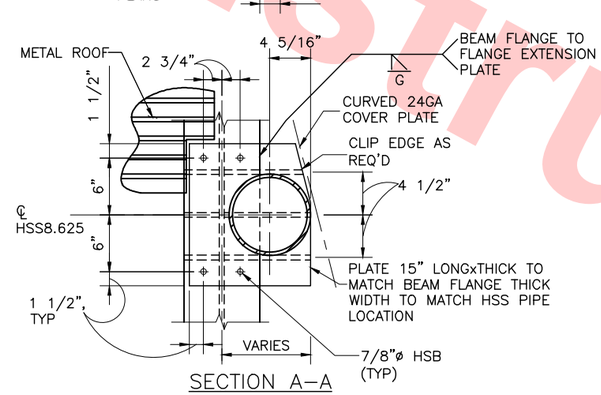

SECTION A-A

NOTE:
FOR INOF NOT SHOWN SEE 2 DB-S690

PLAN SKYLIGHT #1, #2 AND #3 7 DB-S689
SCALE: 1 1/2"=1'-0"
DB-S688

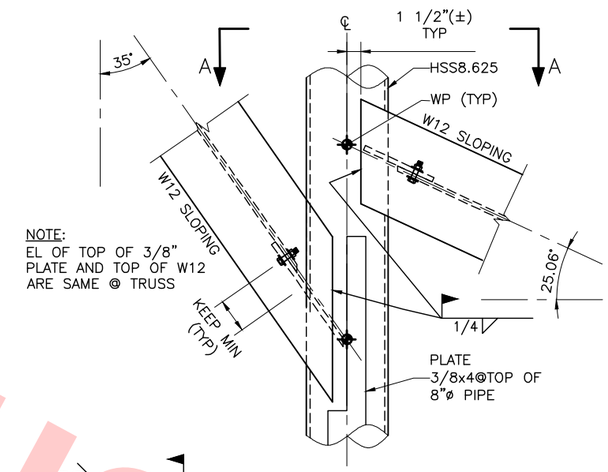

NOTE:
EL OF TOP OF 3/8" PLATE AND TOP OF W12 ARE SAME @ TRUSS

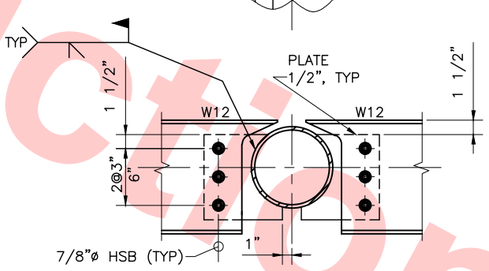

SECTION A-A

DETAIL 8 DB-S689
SCALE: 1 1/2"=1'-0"
DB-S688

Santa Clara Valley Transportation Authority

____NO EXCEPTIONS TAKEN (NET)
____MAKE CORRECTIONS NOTED (MCN)
____AMEND AND RESUBMIT (A/R)

Any action shown above is subject to the terms of the contract and does not relieve the Contractor of any of its obligations under the contract, including design and detailing.

Contract No.: DB11002F

By: _____ Date: _____

Not For Construction

REV	DATE	BY	SUB	APP	DESCRIPTION
0	20130710				READINESS FOR CONSTRUCTION

DESIGNED BY J. REBER, S.E.
DRAWN BY P. DIAZ
CHECKED BY M. TARAZI
IN CHARGE M. TARAZI
DATE 20130710

REGISTERED PROFESSIONAL ENGINEER SOHAM FUAD TARAZI # S-3185 EXP. 6/30/14 STRUCTURAL STATE OF CALIFORNIA

Skanska Shimmick Herzog
1436 California Circle
Milpitas, California 95035
A Joint Venture

MFT Consulting Engineers, Inc. Anil Verma Associates, Inc.
1773 San Pablo Ave., Suite A3 (510) 222-4106
Pinole, CA 94564 Fax (510) 222-5418
SUBMITTED

Lockwood, Andrews & Newnam, Inc. A LAN & BALY COMPANY
T-Y-LIN INTERNATIONAL
APPROVED

BART SILICON VALLEY
BART SILICON VALLEY BERRYESSA EXTENSION

LINE, TRACK, STATIONS AND SYSTEMS DESIGN UNIT 023
MILPITAS STATION
DETAILS
SHEET 9 OF 17

CADD FILENAME C700-S-DB-S689.dwg
SIZE D | SCALE AS NOTED
CONTRACT NO. C700 | REV. 0
AREA CODE DB | SHEET NO. S689 | PAGE NO. 0235

cad-02 Jul 05, 2013 - 1:55pm P:\BART Berryessa Extension Line\S - STRUCTURAL MILPITAS\WORK_6-10-2012\C700-S-DB-S689.dwg

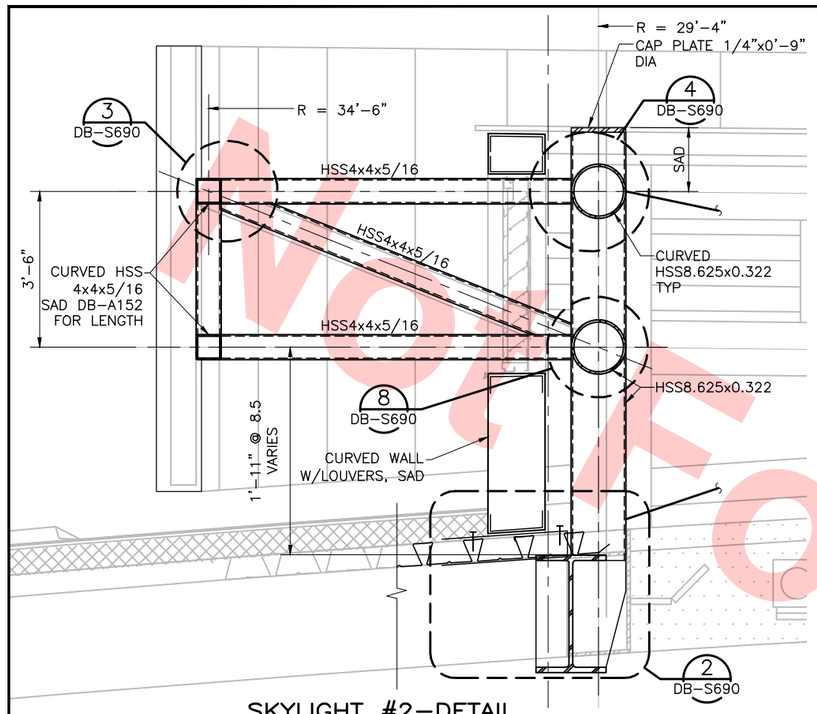

SKYLIGHT #2-DETAIL SECTION DETAIL (1 / DB-S690)
SCALE: 1"=1'-0"

DB-S142
DB-S143
DB-S144
DB-S145

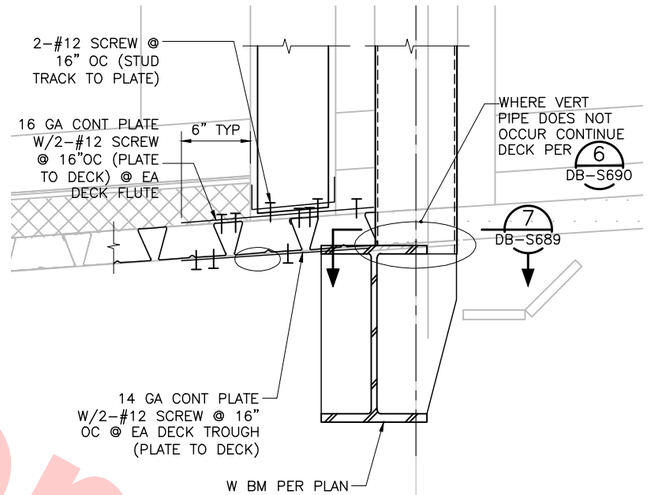

DETAIL @ BASE (2 / DB-S690) DB-S690
SCALE: 1 1/2"=1'-0"

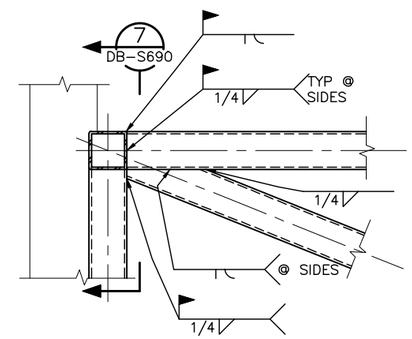

CONNECTION CURVED TOP & BOT HSS TO BRACKET (3 / DB-S690) DB-S690
SCALE: 1 1/2"=1'-0"

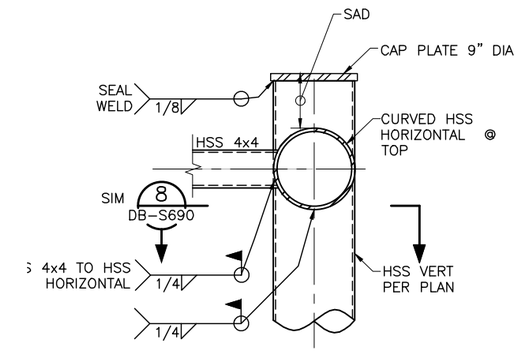

DETAIL @ TOP (4 / DB-S690) DB-S690
SCALE: 1 1/2"=1'-0"

Santa Clara Valley Transportation Authority

____NO EXCEPTIONS TAKEN (NET)
____MAKE CORRECTIONS NOTED (MCN)
____AMEND AND RESUBMIT (A/R)

Any action shown above is subject to the terms of the contract and does not relieve the Contractor of any of its obligations under the contract, including design and detailing.

Contract No.: DB11002F

By: _____ Date: _____

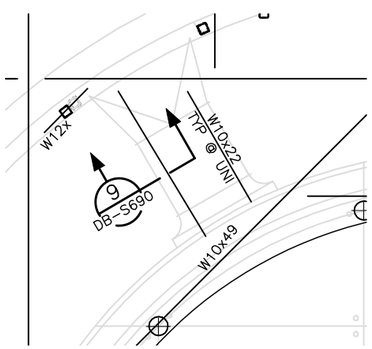

SECTION (5 / DB-S690) DB-S142
SCALE: 3/8"=1'-0"

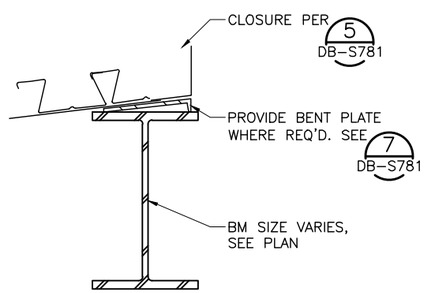

DETAIL (6 / DB-S690) DB-S690
SCALE: 1 1/2"=1'-0"

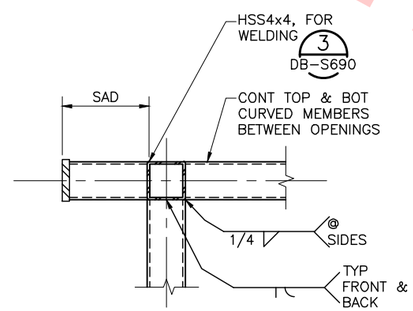

CONNECTION CURVED TOP & BOT HSS TO VERT (7 / DB-S690) DB-S690
SCALE: 1 1/2"=1'-0"

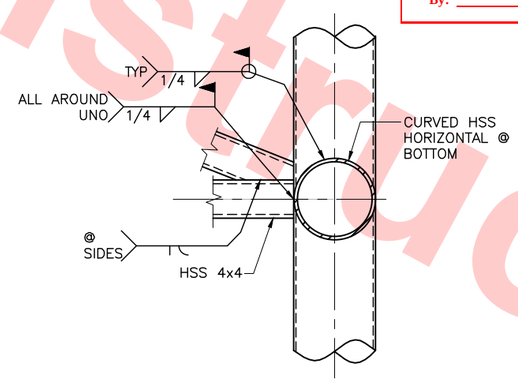

CONNECTION OF DIAGONAL @ BOTTOM (8 / DB-S690) DB-S690
SCALE: 1 1/2"=1'-0"

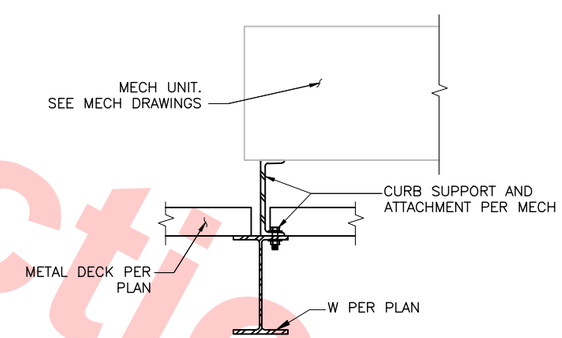

SECTION (9 / DB-S690) DB-S690
SCALE: 1 1/2"=1'-0"

Not For Construction

REV	DATE	BY	SUB	APP	DESCRIPTION
0	20130710				READINESS FOR CONSTRUCTION

DESIGNED BY J. REBER, S.E.
DRAWN BY P. DIAZ
CHECKED BY M. TARAZI
IN CHARGE M. TARAZI
DATE 20130710

REGISTERED PROFESSIONAL ENGINEER SOHAIL FUAD TAYEH # S-3185 EXP. 6/30/14 STRUCTURAL STATE OF CALIFORNIA

Skanska Shimmick Herzog
1436 California Circle Milpitas, California 95035
A Joint Venture

MFT Consulting Engineers, Inc. 1773 San Pablo Ave., Suite A3 Pinole, CA 94564 (510) 222-4106 Fax (510) 222-4115
SUBMITTED

Lockwood, Andrews & Newnam, Inc. A LEO A DALY COMPANY
T-Y-LIN INTERNATIONAL
APPROVED

BART SILICON VALLEY
BART SILICON VALLEY BERRYESSA EXTENSION

LINE, TRACK, STATIONS AND SYSTEMS
DESIGN UNIT 023
MILPITAS STATION
DETAILS

SHEET 10 OF 17

CADD FILENAME C700-S-DB-S690.dwg
SIZE D | SCALE AS NOTED
CONTRACT NO. C700 | REV. 0
AREA CODE DB | SHEET NO. S690 | PAGE NO. 0236

cad-02 Jul 05, 2013 - 1:55pm P:\BART Berryessa Extension Line\S - STRUCTURAL MILPITAS\WORK_6-10-2012\C700-S-DB-S690.dwg

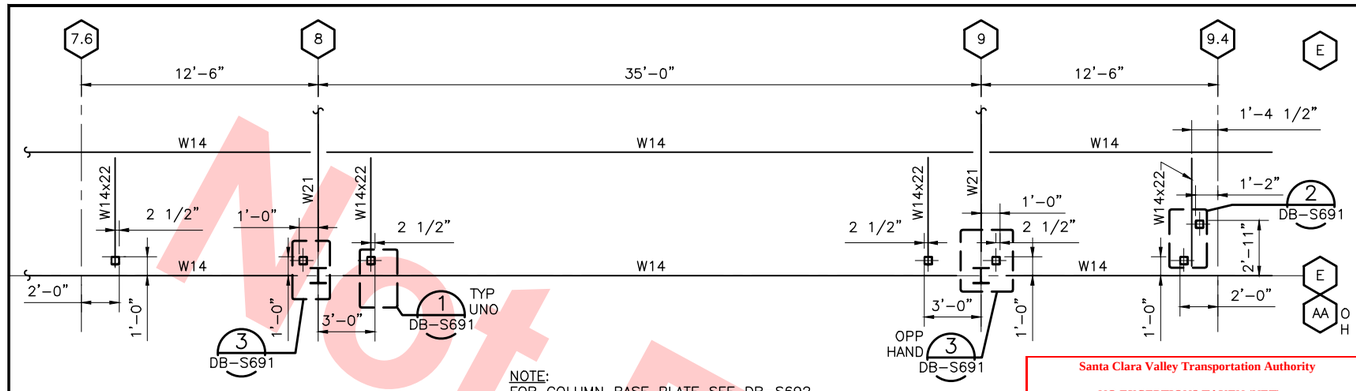

NOTE:
FOR COLUMN BASE PLATE SEE DB-S692

PLAN @ LOW ROOF (A) DB-S691

SCALE: 1/4"=1'-0"

DB-S132
DB-S131

Santa Clara Valley Transportation Authority

____NO EXCEPTIONS TAKEN (NET)
____MAKE CORRECTIONS NOTED (MCN)
____AMEND AND RESUBMIT (A/R)

Any action shown above is subject to the terms of the contract and does not relieve the Contractor of any of its obligations under the contract, including design and detailing.

Contract No.: DB11002F

By: _____ Date: _____

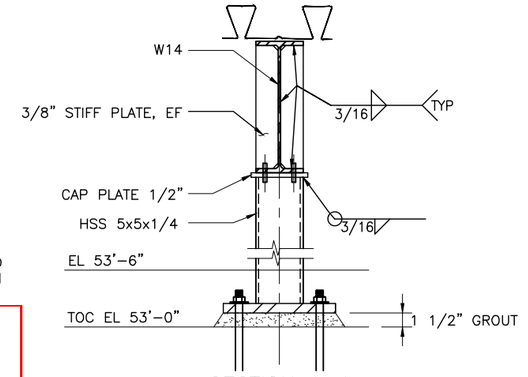

SECTION A-A

NOTE:
FOR BASE PLATE SEE DB-S692

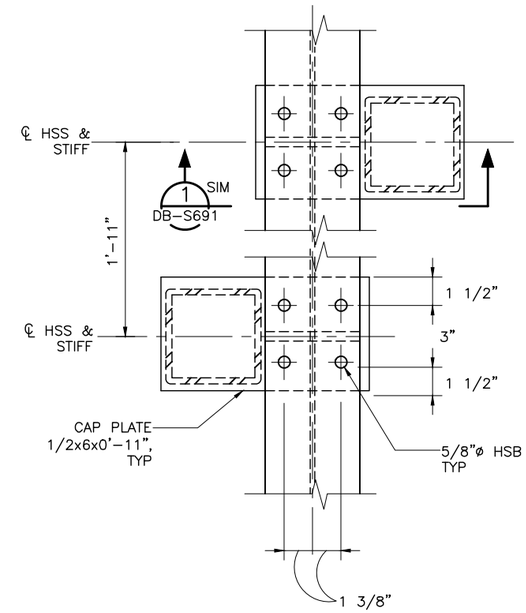

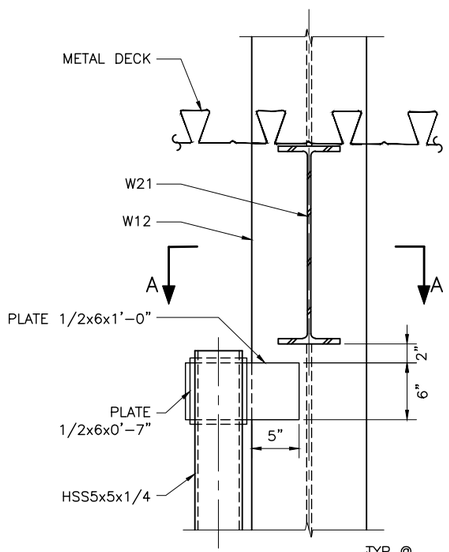

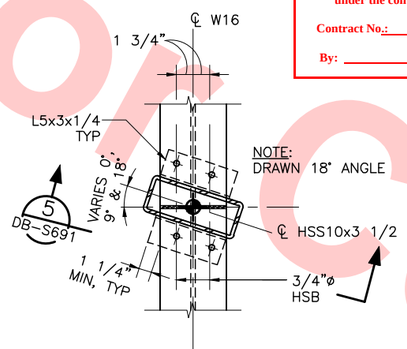

NOTE:
DRAWN 18" ANGLE

PLAN DETAIL (4) DB-S691

SCALE: 1 1/2"=1'-0"

DB-S688

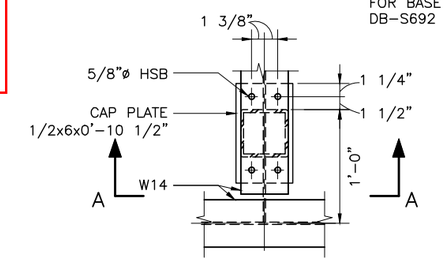

DETAIL (1) DB-S691

SCALE: 1 1/2"=1'-0"

DB-S691

DETAIL PLAN (2) DB-S691

SCALE: 3"=1'-0"

DB-S691

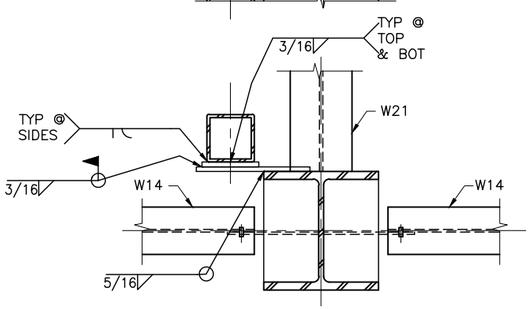

SECTION A-A

DETAIL (3) DB-S691

SCALE: 1 1/2"=1'-0"

DB-S691

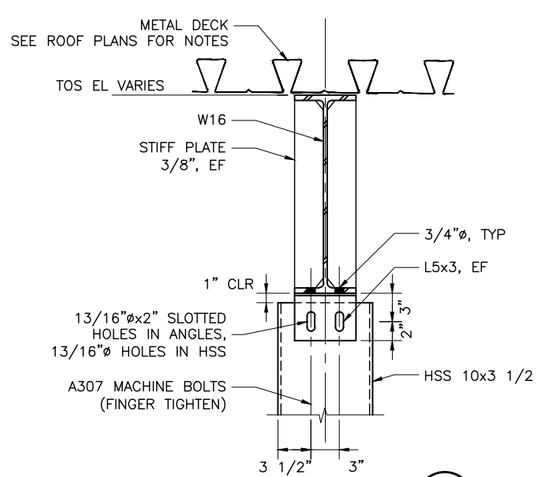

SECTION (5) DB-S691

SCALE: 1 1/2"=1'-0"

DB-S520
DB-S691

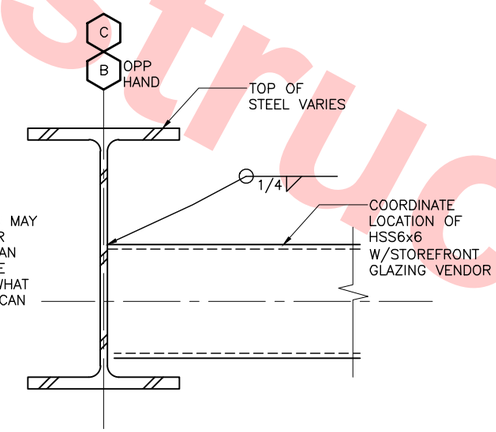

NOTE:
FABRICATOR MAY SUBMIT FOR APPROVAL AN ALTERNATIVE DETAIL IF WHAT IS SHOWN CAN NOT BE ACHIEVED

DETAIL (6) DB-S691

SCALE: 3"=1'-0"

DB-S520

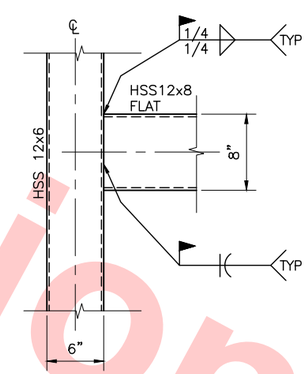

DETAIL (7) DB-S691

SCALE: 1 1/2"=1'-0"

DB-S520

Not For Construction

REV	DATE	BY	SUB	APP	DESCRIPTION
0	20130710				READINESS FOR CONSTRUCTION

DESIGNED BY J. REBER, S.E.
DRAWN BY P. DIAZ
CHECKED BY M. TARAZI
IN CHARGE M. TARAZI
DATE 20130710

REGISTERED PROFESSIONAL ENGINEER SOHAIL FUAD TAHA S-3185 EXP. 6/30/14 STRUCTURAL STATE OF CALIFORNIA

Skanska Shimmick Herzog
1436 California Circle
Milpitas, California 95035
A Joint Venture

MFT Consulting Engineers, Inc. 1773 San Pablo Ave., Suite A3 Pinole, CA 94564 (510) 222-4106 Fax (510) 222-5413
Anil Verma Associates, Inc.
Lockwood, Andrews & Newnam, Inc. A LAN & KAY COMPANY
T-Y-LIN INTERNATIONAL

SUBMITTED
APPROVED

VTA BART SILICON VALLEY
BART SILICON VALLEY BERRYESSA EXTENSION

LINE, TRACK, STATIONS AND SYSTEMS
DESIGN UNIT 023
MILPITAS STATION
DETAILS

SHEET 11 OF 17

CADD FILENAME C700-S-DB-S691.dwg
SIZE D | SCALE AS NOTED
CONTRACT NO. C700 | REV. 0
AREA CODE DB | SHEET NO. S691 | PAGE NO. 0237

cad-02 Jul 05, 2013 – 1:55pm P:\BART Berryessa Extension Line\S – STRUCTURAL, MILPITAS\WORK_6-10-2012\C700-S-DB-S691.dwg

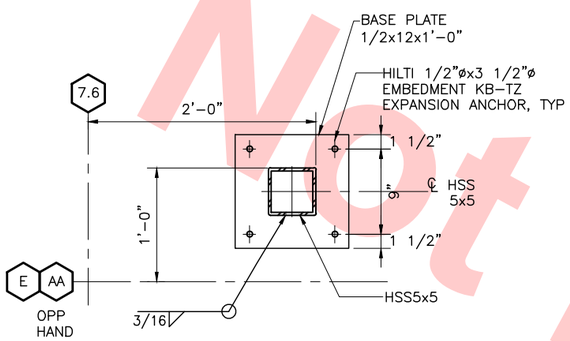

DETAIL PLAN@ BASE 1 / DB-S692
SCALE: 1 1/2"=1'-0"
DB-S122
DB-S123
DB-S124
DB-S125

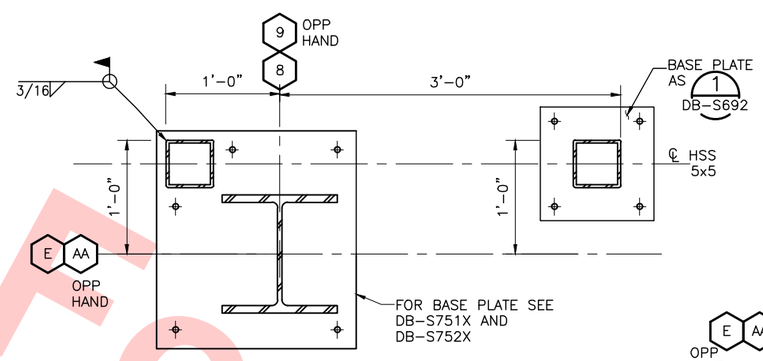

DETAIL PLAN@ BASE 2 / DB-S692
SCALE: 1 1/2"=1'-0"
DB-S122
DB-S123
DB-S124
DB-S125

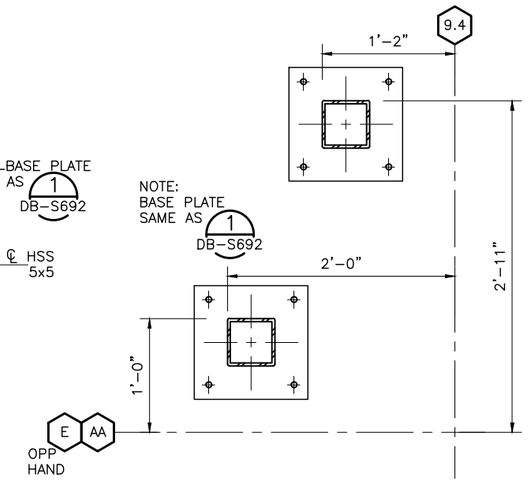

DETAIL PLAN@ BASE 3 / DB-S692
SCALE: 1 1/2"=1'-0"
DB-S122
DB-S123
DB-S124
DB-S125

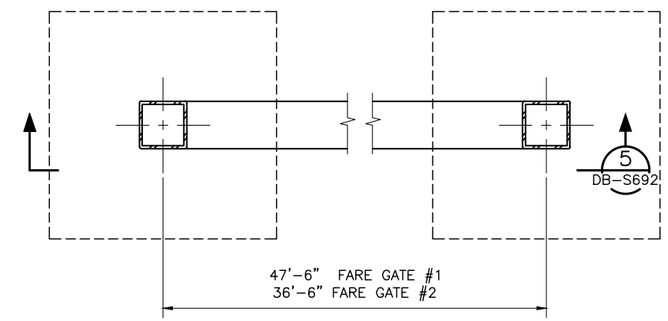

FARE GATE PLAN 4 / DB-S692
SCALE: 1"=1'-0"
DB-S122
DB-S123
DB-S124
DB-S125

Santa Clara Valley Transportation Authority

____NO EXCEPTIONS TAKEN (NET)
____MAKE CORRECTIONS NOTED (MCN)
____AMEND AND RESUBMIT (A/R)

Any action shown above is subject to the terms of the contract and does not relieve the Contractor of any of its obligations under the contract, including design and detailing.

Contract No.: DB11002F

By: _____ Date: _____

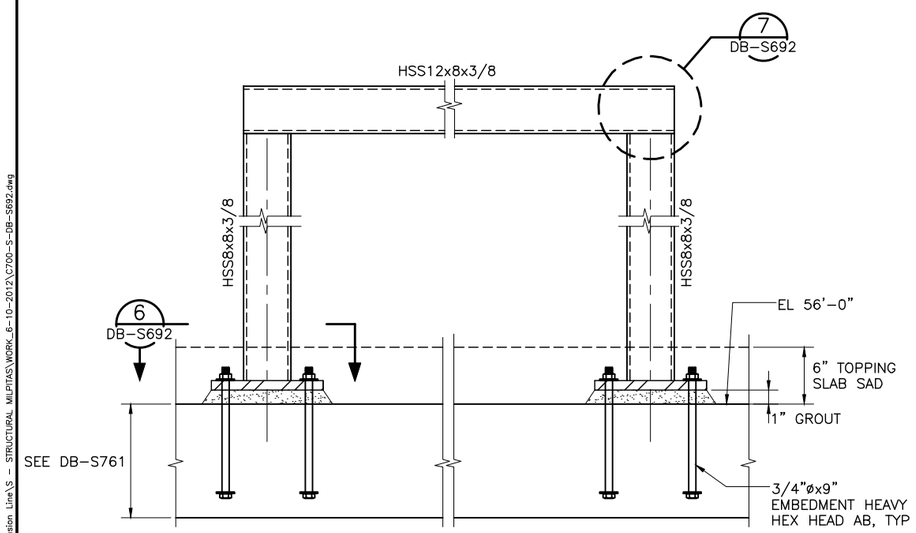

FARE GATE ELEV 5 / DB-S692
SCALE: 1 1/2"=1'-0"
DB-S122
DB-S123
DB-S124
DB-S125

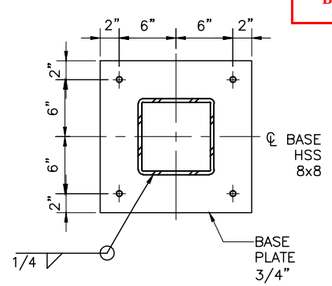

BASE PLATE 6 / DB-S692
SCALE: 1 1/2"=1'-0"
DB-S692

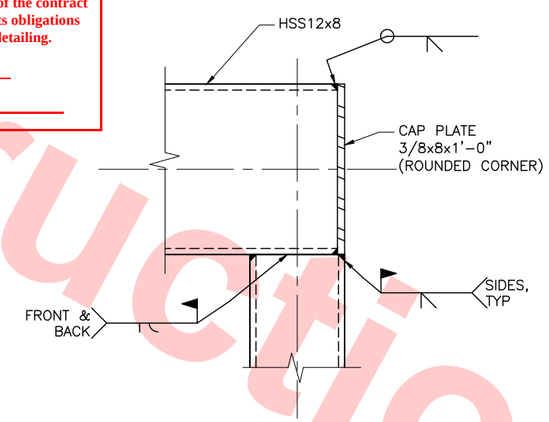

COL TO BM CONN 7 / DB-S692
SCALE: 3"=1'-0"
DB-S692

Not For Construction

REV	DATE	BY	SUB	APP	DESCRIPTION
0	20130710				READINESS FOR CONSTRUCTION

DESIGNED BY J. REBER, S.E.
DRAWN BY P. DIAZ
CHECKED BY M. TARAZI
IN CHARGE M. TARAZI
DATE 20130710

REGISTERED PROFESSIONAL ENGINEER SOHAIL FUAD TAZI # S-3185 EXP. 6/30/14 STATE OF CALIFORNIA STRUCTURAL

Skanska Shimmick Herzog
1436 California Circle
Milpitas, California 95035
A Joint Venture

MFT Consulting Engineers, Inc. Anil Verma Associates, Inc.
1773 San Pablo Ave., Suite A3 (510) 222-4106
Pinole, CA 94564 Fax (510) 222-5418

SUBMITTED

Lockwood, Andrews & Newnam, Inc. A LAN & NAV COMPANY
T·Y·LIN INTERNATIONAL

APPROVED

VTA BART SILICON VALLEY
BART SILICON VALLEY BERRYESSA EXTENSION

LINE, TRACK, STATIONS AND SYSTEMS
DESIGN UNIT 023
MILPITAS STATION
DETAILS

SHEET 12 OF 17

CADD FILENAME C700-S-DB-S692.dwg
SIZE D | SCALE 1 1/2" = 1'-0"
CONTRACT NO. C700 | REV. 0
AREA CODE DB | SHEET NO. S692 | PAGE NO. 0238

cad-02 Jul 05, 2013 - 1:55pm P:\BART Berryessa Extension Line\S - STRUCTURAL MILPITAS\WORK_6-10-2012\C700-S-DB-S692.dwg

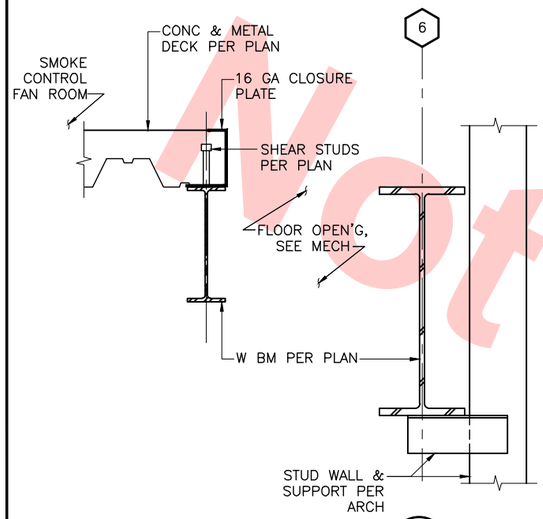

SECTION 1 DB-S693 DB-S133
SCALE: 1 1/2"=1'-0"

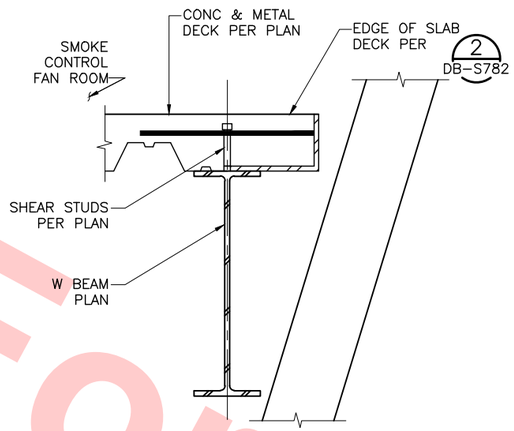

SECTION 2 DB-S693 DB-S133
SCALE: 1 1/2"=1'-0"

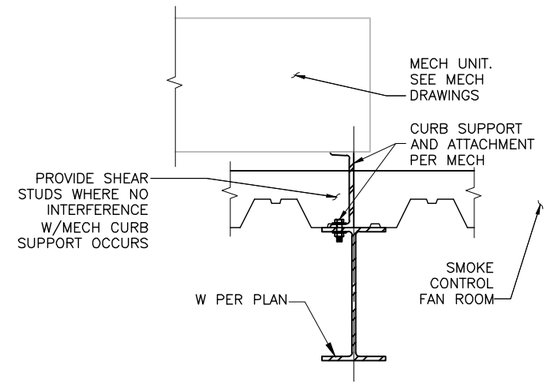

DETAIL 3 DB-S693 DB-S133
SCALE: 1 1/2"=1'-0"

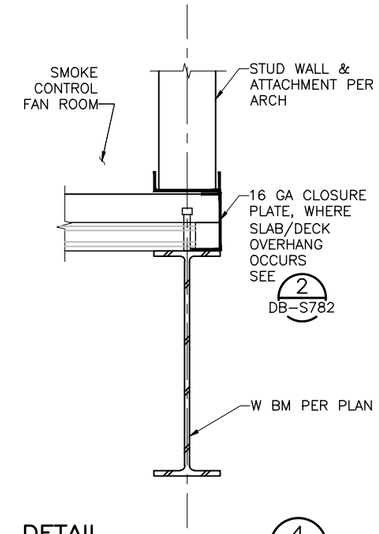

DETAIL 4 DB-S693 DB-S133
SCALE: 1 1/2"=1'-0"

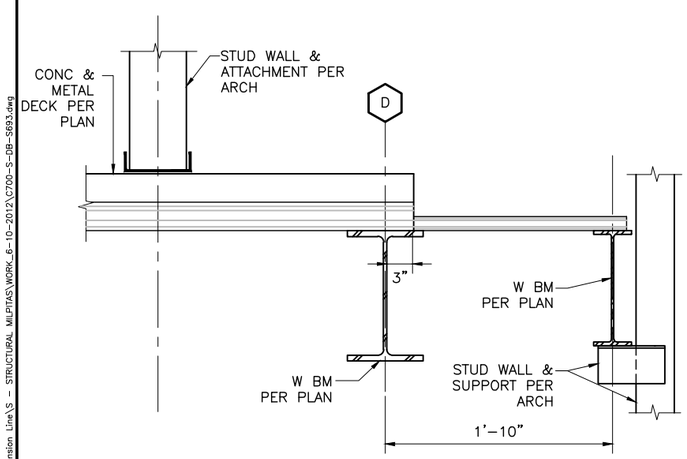

SECTION 5 DB-S693 DB-S132
SCALE: 1 1/2"=1'-0"

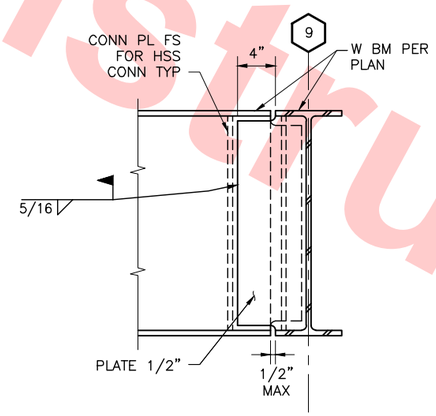

DETAIL 9 DB-S693 DB-S693
SCALE: 1 1/2"=1'-0"

Santa Clara Valley Transportation Authority

____NO EXCEPTIONS TAKEN (NET)
____MAKE CORRECTIONS NOTED (MCN)
____AMEND AND RESUBMIT (A/R)

Any action shown above is subject to the terms of the contract and does not relieve the Contractor of any of its obligations under the contract, including design and detailing.

Contract No.: DB11002F

By: _____ Date: _____

Not For Construction

REV	DATE	BY	SUB	APP	DESCRIPTION
0	20130710				READINESS FOR CONSTRUCTION

DESIGNED BY J. REBER, S.E.
DRAWN BY P. DIAZ
CHECKED BY M. TARAZI
IN CHARGE M. TARAZI
DATE 20130710

REGISTERED PROFESSIONAL ENGINEER SOHAIL FUAD VERMA C 3185 EXP. 6/30/14 STRUCTURAL STATE OF CALIFORNIA

Skanska Shimmick Herzog
1436 California Circle
Milpitas, California 95035
A Joint Venture

MFT CONSULTING ENGINEERS, INC. 1773 San Pablo Ave., Suite A3 Pinole, CA 94564 (510) 222-4106 Fax (510) 222-4116
Anil Verma Associates, Inc.
SUBMITTED

Lockwood, Andrews & Newnam, Inc. A LEO A DALY COMPANY
T-Y-LIN INTERNATIONAL
APPROVED

VTA BART SILICON VALLEY
BART SILICON VALLEY BERRYESSA EXTENSION

LINE, TRACK, STATIONS AND SYSTEMS
DESIGN UNIT 023
MILPITAS STATION
DETAILS

SHEET 13 OF 17

CADD FILENAME C700-S-DB-S693.dwg
SIZE D | SCALE AS NOTED
CONTRACT NO. C700 | REV. 0
AREA CODE DB | SHEET NO. S693 | PAGE NO. 0239

cad-02 Jul 05, 2013 - 1:56pm P:\BART Berryessa Extension Line\S - STRUCTURAL MILPITAS\WORK_6-10-2012\C700-S-DB-S693.dwg

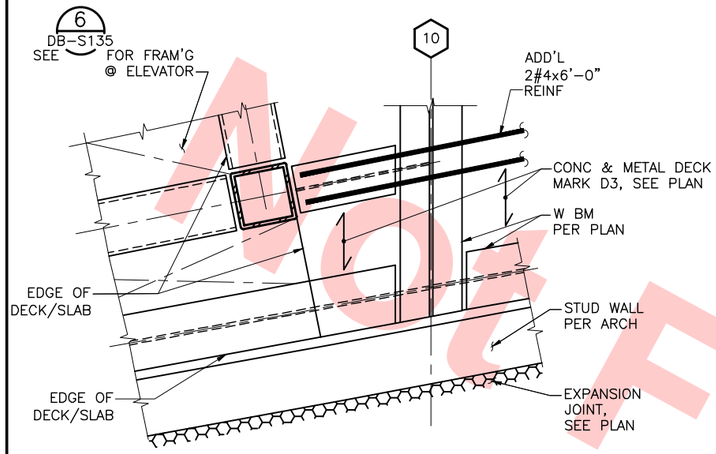

DETAIL PLAN 1 DB-S694 DB-S135
SCALE: 1 1/2"=1'-0"

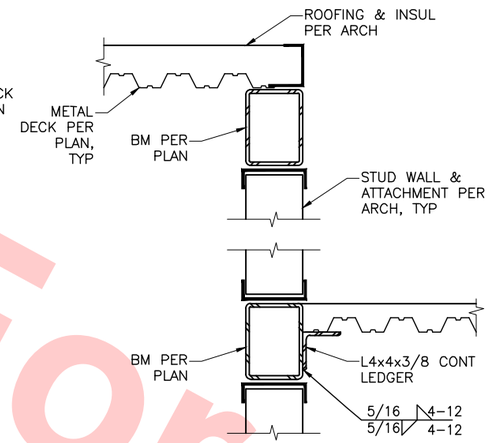

DETAIL PLAN 2 DB-S694 DB-S135
SCALE: 1 1/2"=1'-0"

Not For Construction

Santa Clara Valley Transportation Authority

____NO EXCEPTIONS TAKEN (NET)
____MAKE CORRECTIONS NOTED (MCN)
____AMEND AND RESUBMIT (A/R)

Any action shown above is subject to the terms of the contract and does not relieve the Contractor of any of its obligations under the contract, including design and detailing.

Contract No.: DB11002F

By: _____ Date: _____

REV	DATE	BY	SUB	APP	DESCRIPTION
0	20130710				READINESS FOR CONSTRUCTION

DESIGNED BY J. REBER, S.E.
DRAWN BY P. DIAZ
CHECKED BY M. TARAZI
IN CHARGE M. TARAZI
DATE 20130710

REGISTERED PROFESSIONAL ENGINEER SOHAN FUAD VERMA # S-3185 EXP. 6/30/14 STRUCTURAL STATE OF CALIFORNIA

Skanska Shimmick Herzog
1436 California Circle
Milpitas, California 95035
A Joint Venture

MFT CONSULTING ENGINEERS, INC. 1773 San Pablo Ave., Suite A3 Pinole, CA 94564 (510) 222-4106 Fax (510) 222-4118
Anil Verma Associates, Inc.
SUBMITTED

Lockwood, Andrews & Newnam, Inc. A LEO A DALY COMPANY
T-Y-LIN INTERNATIONAL
APPROVED

BART SILICON VALLEY
BART SILICON VALLEY BERRYESSA EXTENSION

LINE, TRACK, STATIONS AND SYSTEMS
DESIGN UNIT 023
MILPITAS STATION
DETAILS

SHEET 14 OF 17

CADD FILENAME C700-S-DB-S694.dwg
SIZE D | SCALE 1 1/2"= 1'-0"
CONTRACT NO. C700 | REV. 0
AREA CODE DB | SHEET NO. S694 | PAGE NO. 0240

cad-02 Jul 05, 2013 - 1:56pm P:\BART Berryessa Extension Line\S - STRUCTURAL MILPITAS\WORK_6-10-2012\C700-S-DB-S694.dwg

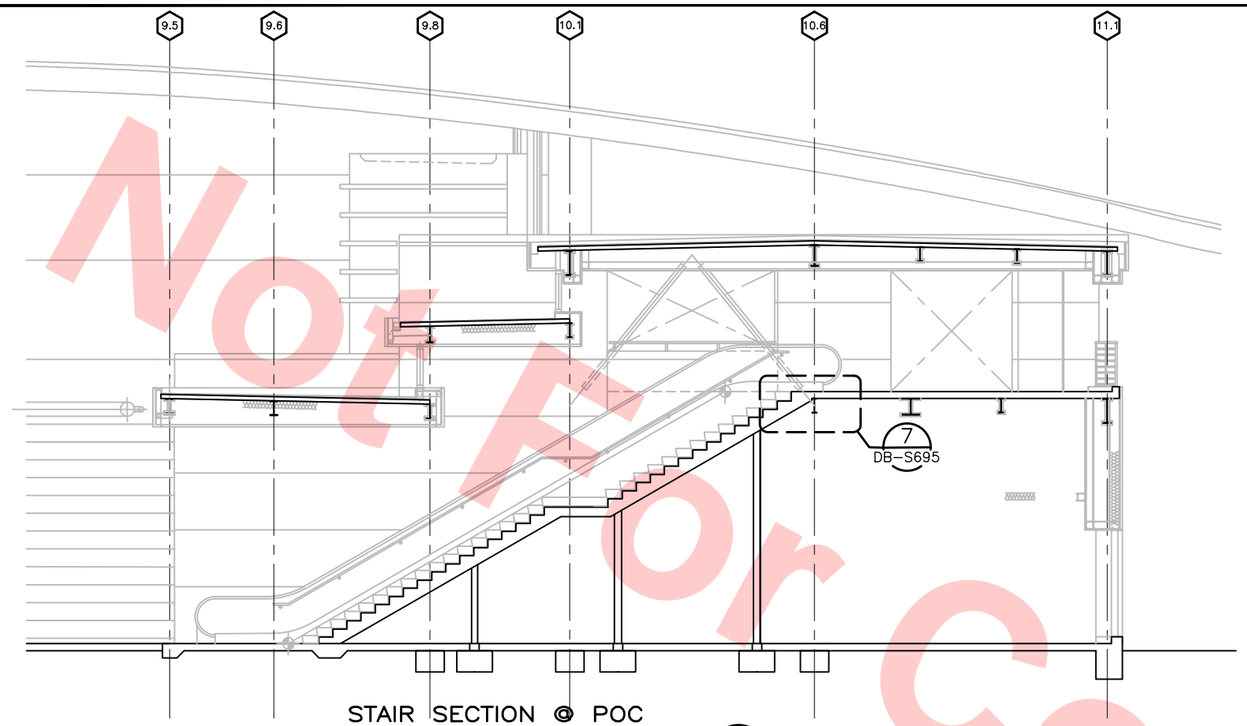

STAIR SECTION @ POC ENTRY
SCALE: 3/16"=1'-0"
1 DB-S695 DB-S125 DB-S134 DB-S149

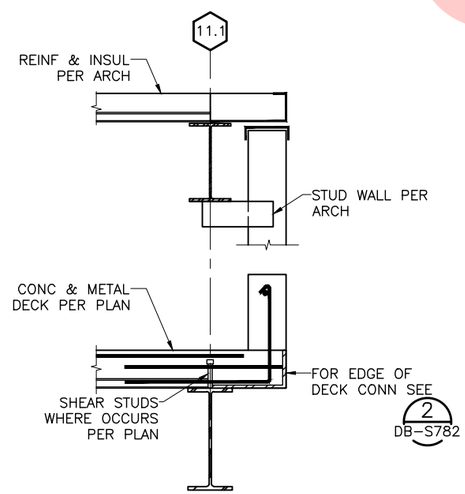

SECTION
SCALE: 1"=1'-0"
6 DB-S695 DB-S134 DB-S149

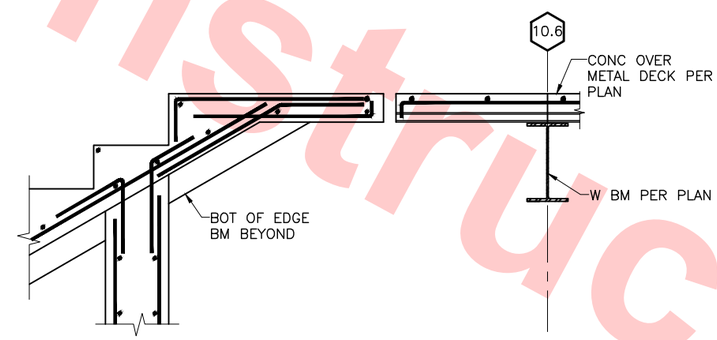

SECTION
SCALE: 1"=1'-0"
7 DB-S695 DB-S695

NOTES:

1. FOR CONCRETE STAIRS DETAILS, REFER TO DRAWING DB-S722 FOR DETAILED INFORMATION.

Santa Clara Valley Transportation Authority

____NO EXCEPTIONS TAKEN (NET)
____MAKE CORRECTIONS NOTED (MCN)
____AMEND AND RESUBMIT (A/R)

Any action shown above is subject to the terms of the contract and does not relieve the Contractor of any of its obligations under the contract, including design and detailing.

Contract No.: DB11002F

By: _____ Date: _____

Not For Construction

REV	DATE	BY	SUB	APP	DESCRIPTION
0	20130710				READINESS FOR CONSTRUCTION

DESIGNED BY J. REBER, S.E.
DRAWN BY P. DIAZ
CHECKED BY M. TARAZI
IN CHARGE M. TARAZI
DATE 20130710

REGISTERED PROFESSIONAL ENGINEER SOHAIL FUAD YAZJI S-3185 EXP. 6/30/14 STRUCTURAL STATE OF CALIFORNIA

Skanska Shimmick Herzog
1436 California Circle
Milpitas, California 95035
A Joint Venture

MFT CONSULTING ENGINEERS, INC. Anil Verma Associates, Inc.
1773 San Pablo Ave., Suite A3 (510) 222-4106
Pinole, CA 94564 Fax (510) 222-4110

SUBMITTED

Lockwood, Andrews & Newnam, Inc. A LEO A DALY COMPANY
T·Y·LIN INTERNATIONAL

APPROVED

BART SILICON VALLEY
BART SILICON VALLEY BERRYESSA EXTENSION

LINE, TRACK, STATIONS AND SYSTEMS
DESIGN UNIT 023
MILPITAS STATION
DETAILS

SHEET 15 OF 17

CADD FILENAME C700-S-DB-S695.dwg
SIZE D | SCALE AS NOTED
CONTRACT NO. C700 | REV. 0
AREA CODE DB | SHEET NO. S695 | PAGE NO. 0241

cad-02 Jul 05, 2013 - 1:56pm P:\BART Berryessa Extension Line\S - STRUCTURAL MILPITAS\WORK_6-10-2012\C700-S-DB-S695.dwg

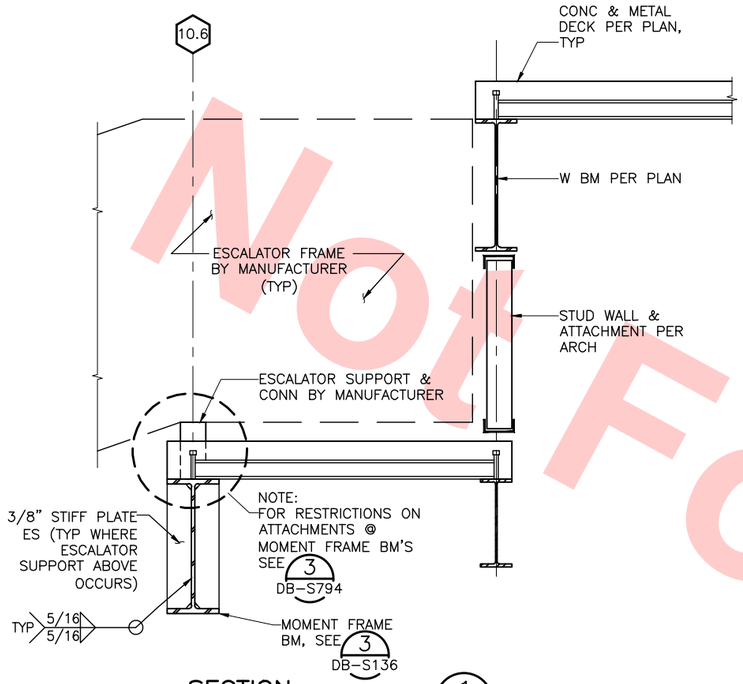

SECTION 1 DB-S696 DB-S134
SCALE: 1"=1'-0"

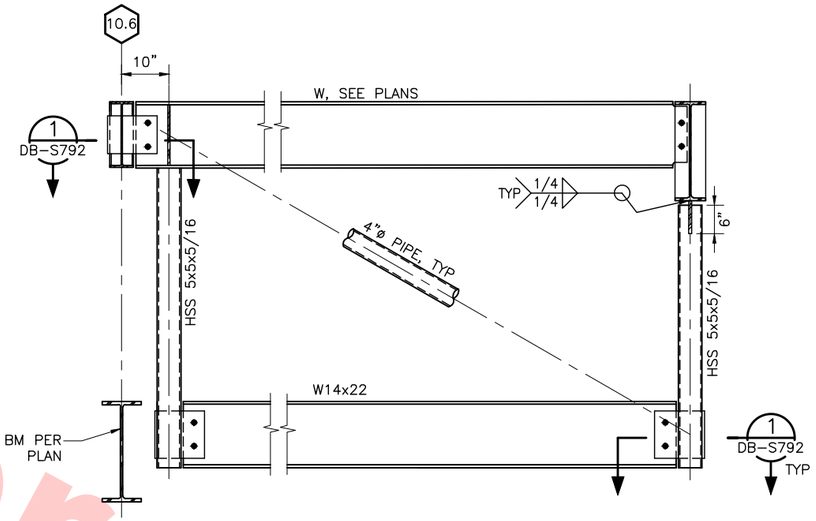

SECTION 2 DB-S696 DB-S134
SCALE: 3/4"=1'-0"

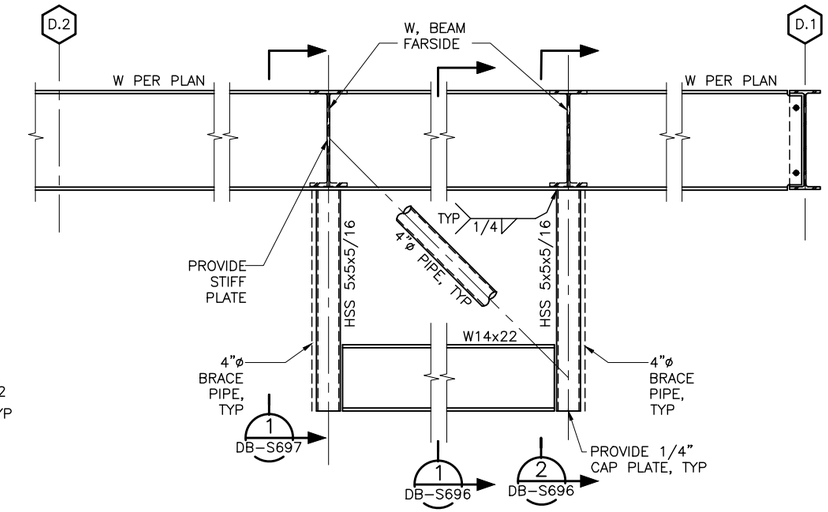

SECTION 3 DB-S696 DB-S134
SCALE: 3/4"=1'-0"

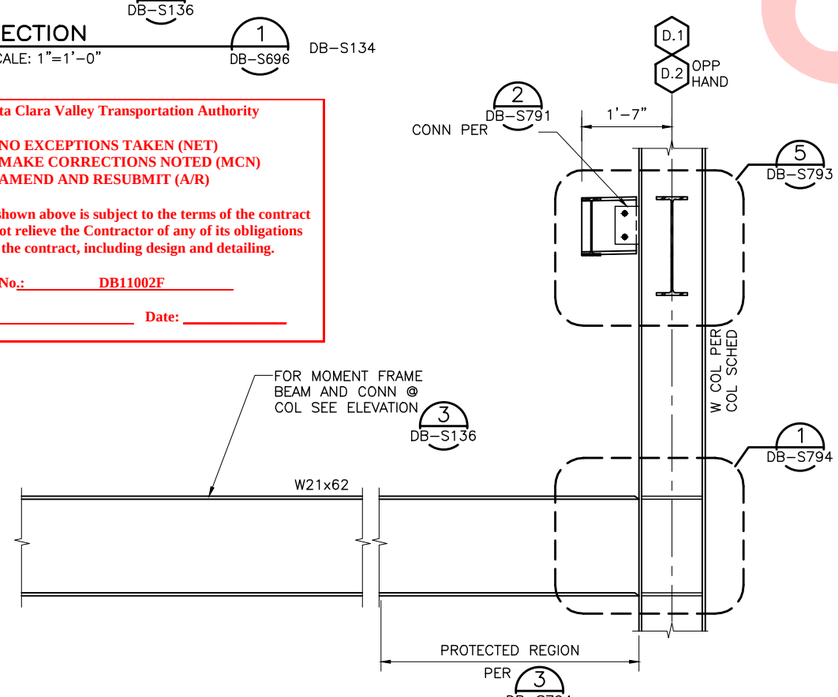

SECTION 4 DB-S696 DB-S136
SCALE: 3/4"=1'-0"

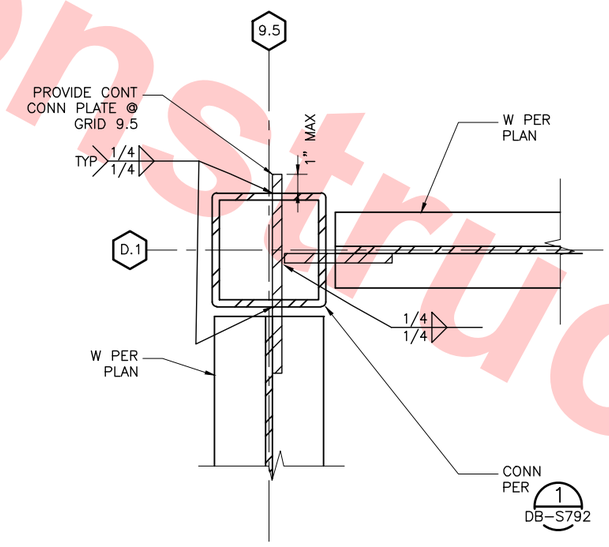

DETAIL PLAN 5 DB-S696 DB-S134
SCALE: 3"=1'-0"

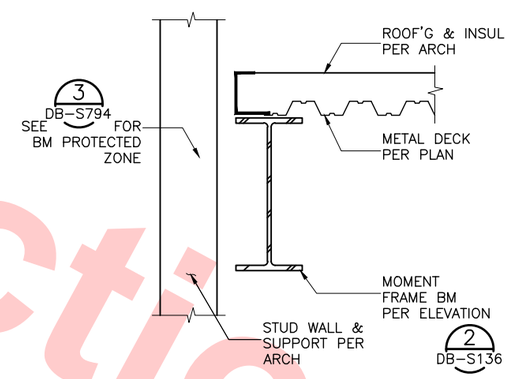

DETAIL 6 DB-S696 DB-S149
SCALE: 1 1/2"=1'-0"

Not For Construction

Santa Clara Valley Transportation Authority

____NO EXCEPTIONS TAKEN (NET)
____MAKE CORRECTIONS NOTED (MCN)
____AMEND AND RESUBMIT (A/R)

Any action shown above is subject to the terms of the contract and does not relieve the Contractor of any of its obligations under the contract, including design and detailing.

Contract No.: DB11002F

By: _____ Date: _____

REV	DATE	BY	SUB	APP	DESCRIPTION
0	20130710				READINESS FOR CONSTRUCTION

DESIGNED BY J. REBER, S.E.
DRAWN BY P. DIAZ
CHECKED BY M. TARAZI
IN CHARGE M. TARAZI
DATE 20130710

REGISTERED PROFESSIONAL ENGINEER SOHAIL FUAD VERMA # S-3185 EXP. 6/30/14 STRUCTURAL STATE OF CALIFORNIA

Skanska Shimmick Herzog
1436 California Circle Milpitas, California 95035
A Joint Venture

MFT Consulting Engineers, Inc. Anil Verma Associates, Inc. 1773 San Pablo Ave., Suite A3 (510) 222-4106 Fax (510) 222-4410 Pinole, CA 94564
SUBMITTED

Lockwood, Andrews & Newnam, Inc. A LEO A DALY COMPANY
T·Y·LIN INTERNATIONAL
APPROVED

VTA BART SILICON VALLEY
BART SILICON VALLEY BERRYESSA EXTENSION

LINE, TRACK, STATIONS AND SYSTEMS
DESIGN UNIT 023
MILPITAS STATION
DETAILS

SHEET 16 OF 17

CADD FILENAME C700-S-DB-S696.dwg
SIZE D | SCALE AS NOTED
CONTRACT NO. C700 | REV. 0
AREA CODE DB | SHEET NO. S696 | PAGE NO. 0242

cad-02 Jul 05, 2013 - 1:56pm P:\BART Berryessa Extension Line\S - STRUCTURAL MILPITAS\WORK_6-10-2012\C700-S-DB-S696.dwg

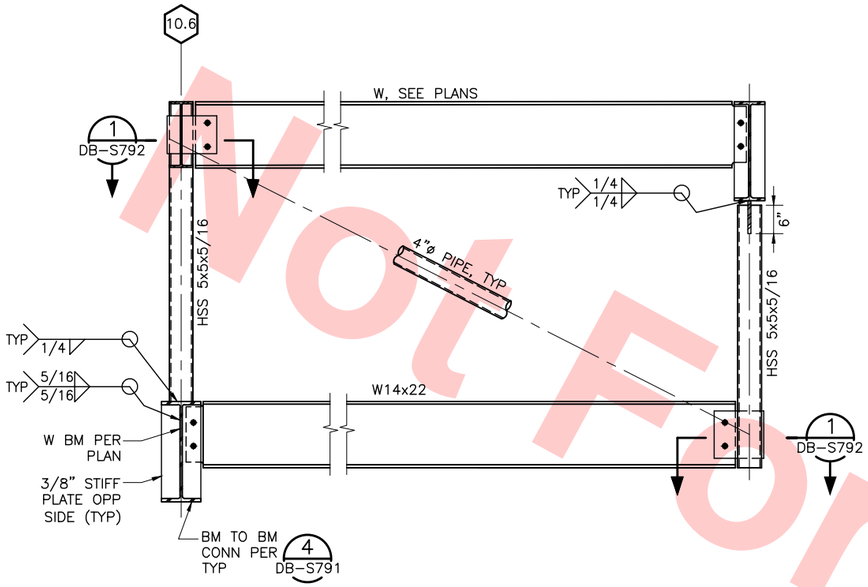

SECTION 1 DB-S697 DB-S134
SCALE: 3/4"=1'-0"

Not For Construction

Santa Clara Valley Transportation Authority

____NO EXCEPTIONS TAKEN (NET)
____MAKE CORRECTIONS NOTED (MCN)
____AMEND AND RESUBMIT (A/R)

Any action shown above is subject to the terms of the contract and does not relieve the Contractor of any of its obligations under the contract, including design and detailing.

Contract No.: DB11002F

By: _____ Date: _____

REV	DATE	BY	SUB	APP	DESCRIPTION
0	20130710				READINESS FOR CONSTRUCTION

DESIGNED BY J. REBER, S.E.
DRAWN BY P. DIAZ
CHECKED BY M. TARAZI
IN CHARGE M. TARAZI
DATE 20130710

PROFESSIONAL ENGINEER STRUCTURAL # S-3185 EXP. 6/30/14 STATE OF CALIFORNIA

Skanska Shimmick Herzog
1436 California Circle
Milpitas, California 95035
A Joint Venture

MFT Consulting Engineers, Inc. 1773 San Pablo Ave., Suite A3 Pinole, CA 94564 (510) 222-4106 Fax: (510) 222-4118
Anil Verma Associates, Inc.
Lockwood, Andrews & Newnam, Inc. A LAN & BALY COMPANY
T-Y-LIN INTERNATIONAL

SUBMITTED
APPROVED

BART SILICON VALLEY
BART SILICON VALLEY BERRYESSA EXTENSION

LINE, TRACK, STATIONS AND SYSTEMS
DESIGN UNIT 023
MILPITAS STATION
DETAILS

SHEET 17 OF 17

CADD FILENAME C700-S-DB-S697.dwg
SIZE D | SCALE AS NOTED
CONTRACT NO. C700 | REV. 0
AREA CODE DB | SHEET NO. S697 | PAGE NO. 0243

cad-02 Jul 05, 2013 - 1:56pm P:\BART Berryessa Extension Line\S - STRUCTURAL MILPITAS\WORK_6-10-2012\C700-S-DB-S697.dwg

NOTE:
FOR STAIR DIMENSIONS NOT SHOWN SEE DB–A565

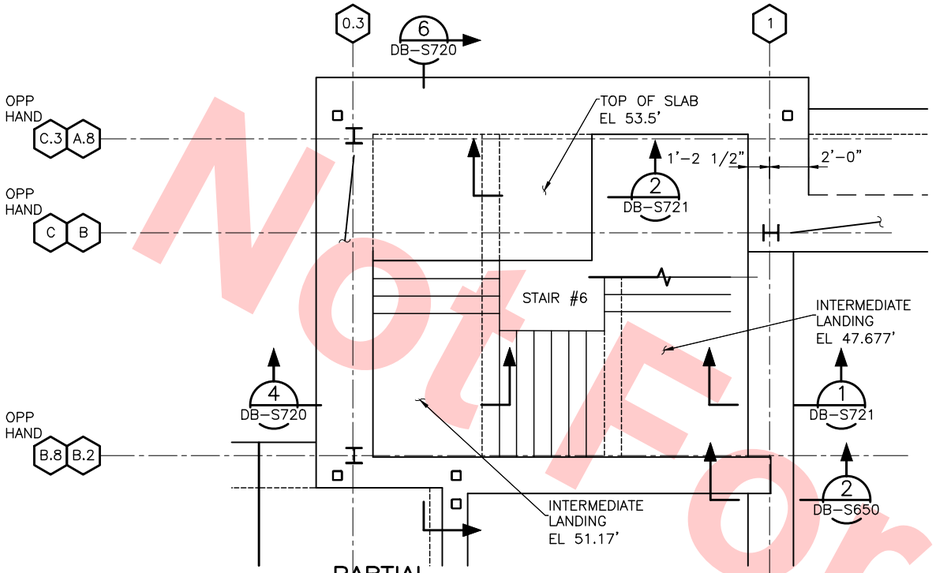

PARTIAL PLAN @ CONCOURSE STAIR #6 (#5 OPP HAND) 1 DB–S720 DB–S121
SCALE: 1/4"=1'–0"

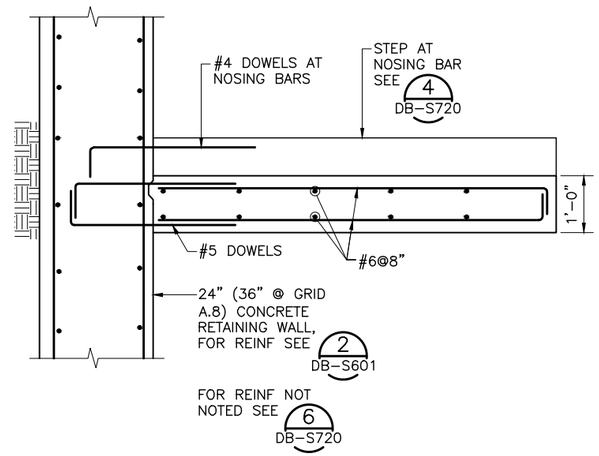

SECTION 3 DB–S720 DB–S720
SCALE: 3/4"=1'–0"

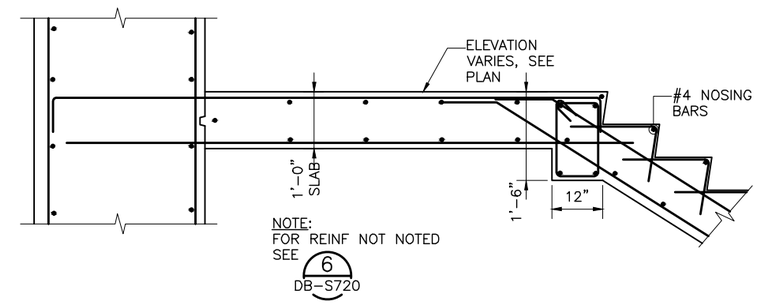

SECTION 4 DB–S720 DB–S720 DB–S721
SCALE: 3/4"=1'–0"

FOR REFERENCE ONLY AND NOT FOR REVIEW. THIS DRAWING WAS ALREADY SUBMITTED UNDER DU23-WP08 RFC TRENCH PACKAGE.

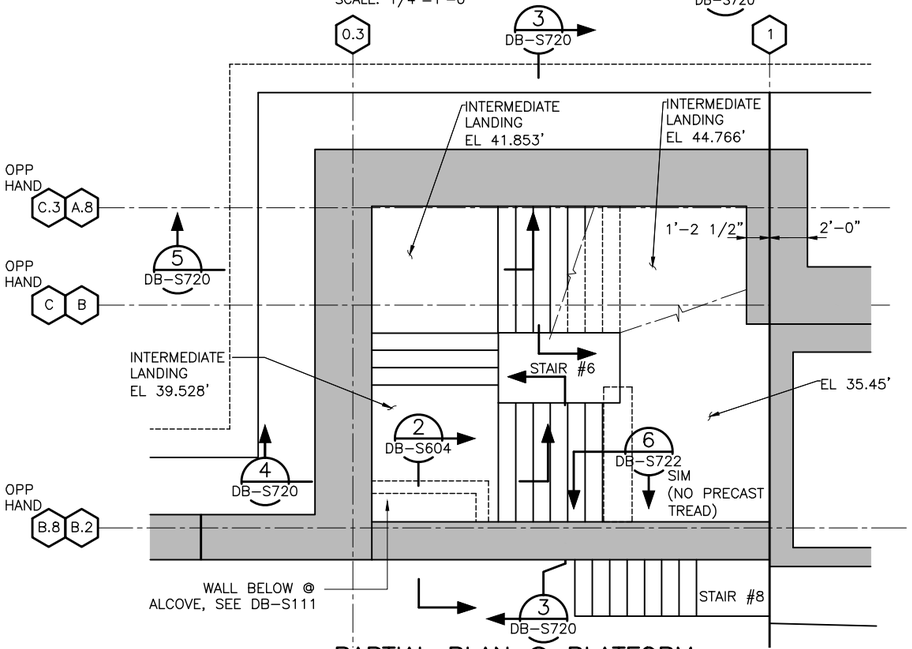

PARTIAL PLAN @ PLATFORM STAIR #6, STAIR #8 (#5 OPP HAND, #7 OPP HAND) 2 DB–S720 DB–S111 DB–S604
SCALE: 1/4"=1'–0"

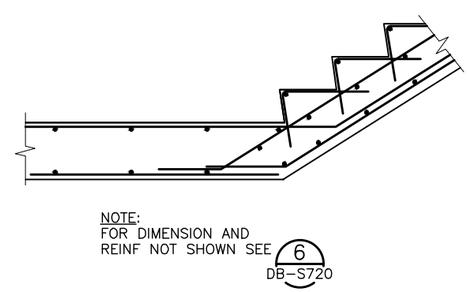

SECTION 5 DB–S720 DB–S720
SCALE: 3/4"=1'–0"

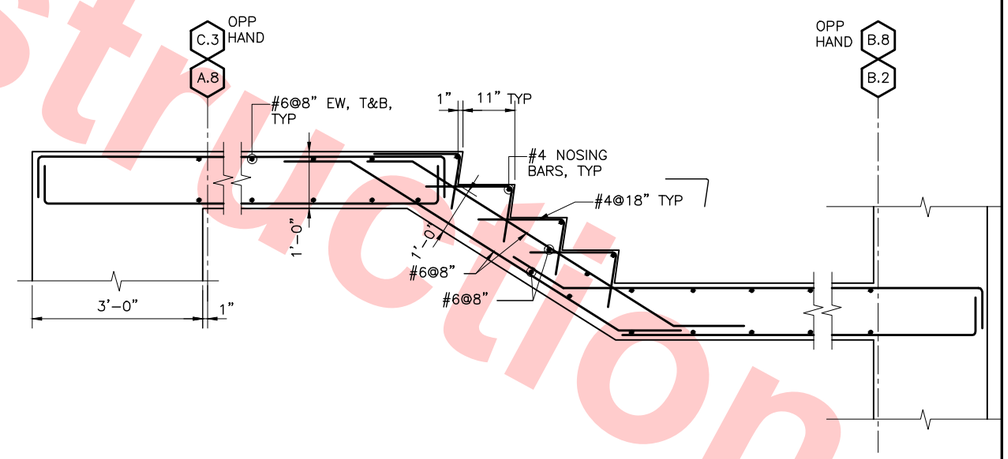

SECTION 6 DB–S720 DB–S720
SCALE: 3/4"=1'–0"

Not For Construction

REV	DATE	BY	SUB	APP	DESCRIPTION
0	20130531				READINESS FOR CONSTRUCTION

DESIGNED BY J. REBER, S.E.
DRAWN BY P. DIAZ
CHECKED BY M. TARAZI
IN CHARGE M. TARAZI
DATE 20130531

REGISTERED PROFESSIONAL ENGINEER NAWAR FUAD TARAZI # S 3185 EXP. 6/30/14 STRUCTURAL STATE OF CALIFORNIA

Skanska Shimmick Herzog
1436 California Circle Milpitas, California 95035
A Joint Venture

MFT Consulting Engineers, Inc. 1773 San Pablo Ave., Suite A3 Pinole, CA 94564 (510) 222-4106 Fax (510) 222-6418
Anil Verma Associates, Inc.
Lockwood, Andrews & Newnam, Inc. A LBG & BALT COMPANY
T-Y-LIN INTERNATIONAL

SUBMITTED
APPROVED

VTA BART SILICON VALLEY
BART SILICON VALLEY BERRYESSA EXTENSION

LINE, TRACK, STATIONS AND SYSTEMS DESIGN UNIT 023
MILPITAS STATION
STAIRS SECTIONS AND DETAILS
SHEET 1 OF 4

CADD FILENAME C700–S–DB–S720.dwg
SIZE D SCALE AS NOTED
CONTRACT NO. C700 REV. 0
AREA CODE DB SHEET NO. S720 PAGE NO. 0244

cad–02 Jul 05, 2013 – 1:56pm P:\BART Berryessa Extension Line\S – STRUCTURAL MILPITAS\WORK_6–10–2012\C700–S–DB–S720.dwg

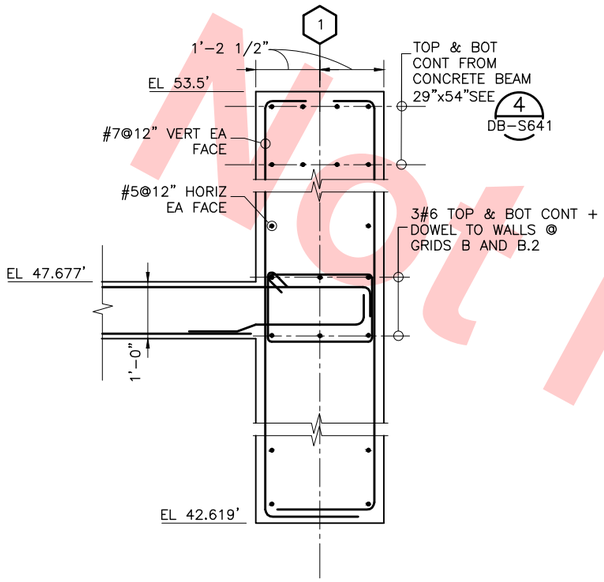

SECTION 1 DB-S721 DB-S720
SCALE: 3/4"=1'-0"

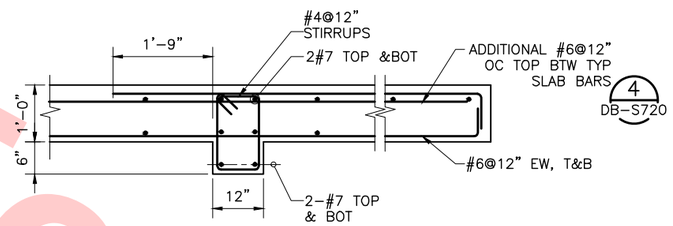

SECTION 2 DB-S721 DB-S720
SCALE: 3/4"=1'-0"

FOR REFERENCE ONLY AND NOT FOR REVIEW. THIS DRAWING WAS ALREADY SUBMITTED UNDER DU23-WP08 RFC TRENCH PACKAGE.

Not For Construction

REV	DATE	BY	SUB	APP	DESCRIPTION
0	20130531				READINESS FOR CONSTRUCTION

DESIGNED BY J. REBER, S.E.
DRAWN BY P. DIAZ
CHECKED BY M. TARAZI
IN CHARGE M. TARAZI
DATE 20130531

REGISTERED PROFESSIONAL ENGINEER HUMAN FUAD TARAZI # S 3185 EXP. 6/30/14 STRUCTURAL STATE OF CALIFORNIA

Skanska Shimmick Herzog
1436 California Circle
Milpitas, California 95035
A Joint Venture

MFT Consulting Engineers, Inc. Anil Verma Associates, Inc.
1773 San Pablo Ave., Suite A3 (510) 222-4106
Pinole, CA 94564 Fax (510) 222-6418

Lockwood, Andrews & Newnam, Inc. A LAN & BALY COMPANY
T-Y-LIN INTERNATIONAL

SUBMITTED _____ APPROVED _____

VTA BART SILICON VALLEY
BART SILICON VALLEY BERRYESSA EXTENSION

LINE, TRACK, STATIONS AND SYSTEMS
DESIGN UNIT 023
MILPITAS STATION
STAIRS SECTIONS
AND DETAILS
SHEET 2 OF 4

CADD FILENAME C700-S-DB-S721.dwg
SIZE D | SCALE 3/4" = 1'-0"
CONTRACT NO. C700 | REV. 0
AREA CODE DB | SHEET NO. S721 | PAGE NO. 0245

cad-02 Jul 05, 2013 - 1:56pm P:\BART Berryessa Extension Line\S - STRUCTURAL MILPITAS\WORK_6-10-2012\C700-S-DB-S721.dwg

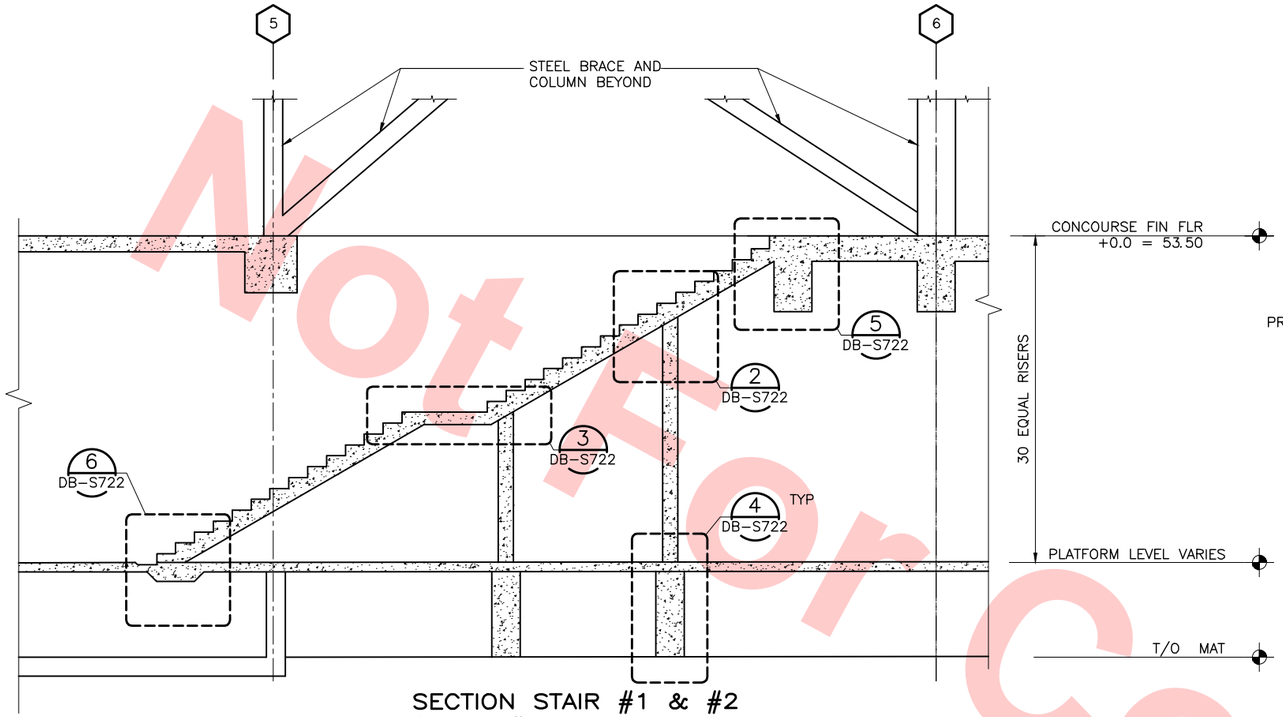

SECTION STAIR #1 & #2 (STAIR #3 & #4 SIM)
SCALE: 1/4"=1'-0" — 1 DB-S722 — DB-S072, DB-S112

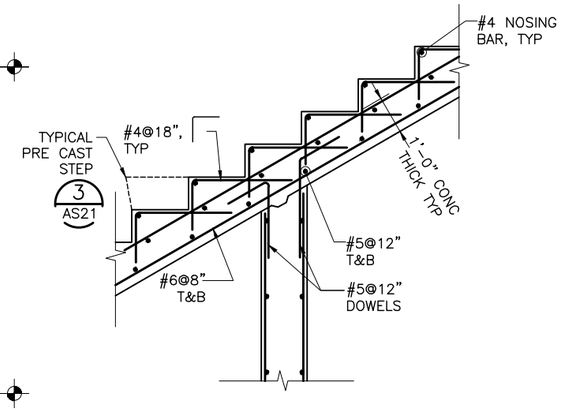

DETAIL
SCALE: 3/4"=1'-0" — 2 DB-S722 — DB-S722

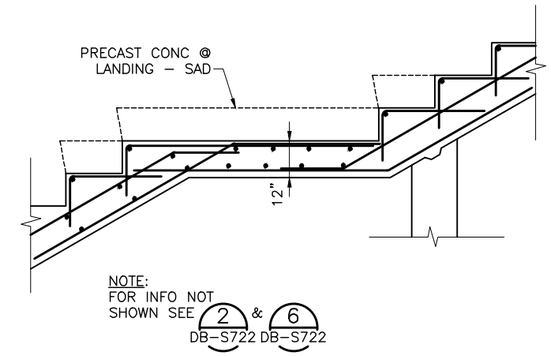

DETAIL
SCALE: 3/4"=1'-0" — 3 DB-S722 — DB-S722

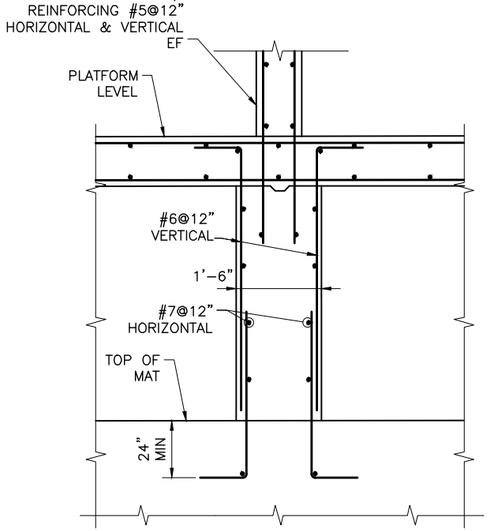

DETAIL
SCALE: 3/4"=1'-0" — 4 DB-S722 — DB-S722

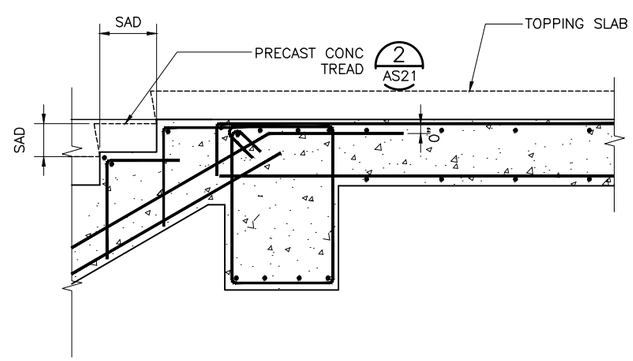

SECTION
SCALE: 3/4"=1'-0" — 5 DB-S722 — DB-S722

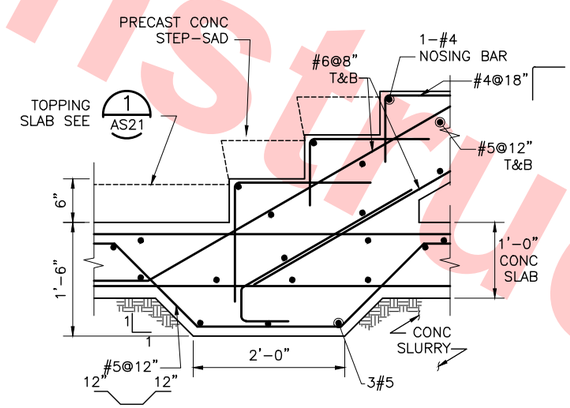

SECTION
SCALE: 1"=1'-0" — 6 DB-S722 — DB-S722, DB-S114

FOR REFERENCE ONLY AND NOT FOR REVIEW. THIS DRAWING WAS ALREADY SUBMITTED UNDER DU23-WP08 RFC TRENCH PACKAGE.

Not For Construction

REV	DATE	BY	SUB	APP	DESCRIPTION
0	20130531				READINESS FOR CONSTRUCTION

DESIGNED BY J. REBER, S.E.
DRAWN BY P. DIAZ
CHECKED BY M. TARAZI
IN CHARGE M. TARAZI
DATE 20130531

REGISTERED PROFESSIONAL ENGINEER NORMAN FUAD TARAZI # S 3185 EXP. 6/30/14 STRUCTURAL STATE OF CALIFORNIA

Skanska Shimmick Herzog
1436 California Circle
Milpitas, California 95035
A Joint Venture

MFT Consulting Engineers, Inc. Anil Verma Associates, Inc.
1773 San Pablo Ave., Suite A3 (510) 222-4106
Pinole, CA 94564 Fax (510) 222-6418

Lockwood, Andrews & Newnam, Inc. A LAN & HALF COMPANY
T·Y·LIN INTERNATIONAL

SUBMITTED _____
APPROVED _____

VTA BART SILICON VALLEY
BART SILICON VALLEY BERRYESSA EXTENSION

LINE, TRACK, STATIONS AND SYSTEMS
DESIGN UNIT 023
MILPITAS STATION
STAIRS SECTIONS AND DETAILS
SHEET 3 OF 4

CADD FILENAME C700-S-DB-S722.dwg
SIZE D | SCALE AS NOTED
CONTRACT NO. C700 | REV. 0
AREA CODE DB | SHEET NO. S722 | PAGE NO. 0246

cad-02 Jul 05, 2013 – 1:56pm P:\BART Berryessa Extension Line\S – STRUCTURAL MILPITAS\WORK_6-10-2012\C700-S-DB-S722.dwg

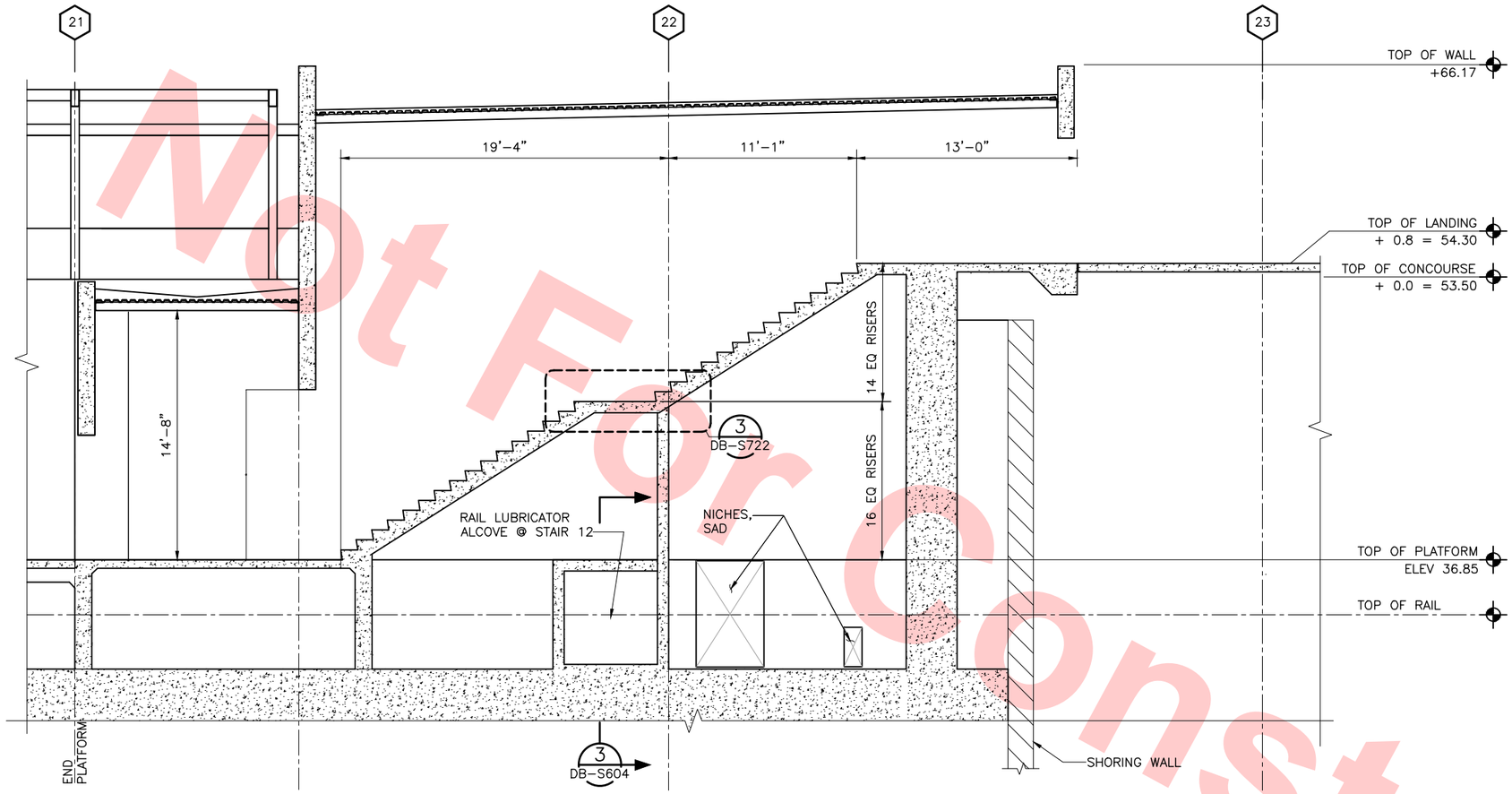

SECTION
SCALE: 1/4"=1'-0"

1
DB-S723

DB-S076
DB-S116
DB-S148

Not For Construction

FOR REFERENCE ONLY AND NOT FOR REVIEW. THIS DRAWING WAS already SUBMITTED UNDER DU23-WP08 RFC TRENCH PACKAGE.

REV	DATE	BY	SUB	APP	DESCRIPTION
0	20130710				READINESS FOR CONSTRUCTION
0	20130531				READINESS FOR CONSTRUCTION

DESIGNED BY J. REBER, S.E.
DRAWN BY P. DIAZ
CHECKED BY M. TARAZI
IN CHARGE M. TARAZI
DATE 20130710

REGISTERED PROFESSIONAL ENGINEER JONATHAN FUAD REBER S-3185 EXP. 6/30/14 STRUCTURAL STATE OF CALIFORNIA

Skanska Shimmick Herzog
1436 California Circle
Milpitas, California 95035
A Joint Venture

MFT Consulting Engineers, Inc. Anil Verma Associates, Inc.
1773 San Pablo Ave., Suite A3 (510) 222-4166
Pinole, CA 94564 Fax (510) 222-5418
SUBMITTED

Lockwood, Andrews & Newnam, Inc. A LIN A. KALY COMPANY
T·Y·LIN INTERNATIONAL
APPROVED

VTA. BART SILICON VALLEY
BART SILICON VALLEY BERRYESSA EXTENSION

LINE, TRACK, STATIONS AND SYSTEMS
DESIGN UNIT 023
MILPITAS STATION
STAIRS SECTIONS
AND DETAILS
SHEET 4 OF 4

CADD FILENAME C700-S-DB-S723.dwg
SIZE D | SCALE AS NOTED
CONTRACT NO. C700 | REV. 0
AREA CODE DB | SHEET NO. S723 | PAGE NO. 0247

cad-02 Jul 05, 2013 - 1:56pm P:\BART Berryessa Extension Line\S - STRUCTURAL MILPITAS\WORK_6-10-2012\C700-S-DB-S723.dwg

NOTE:

1. FOR GENERAL NOTES, SEE DWG NO DB–S001X, DB–S002X, AND DB–S003X.
2. BF–7 INDICATES BRACED FRAME. SEE STEEL FRAMING ELEVATIONS ON DB–S501, DB–S502 & DB–S503 SHEETS.

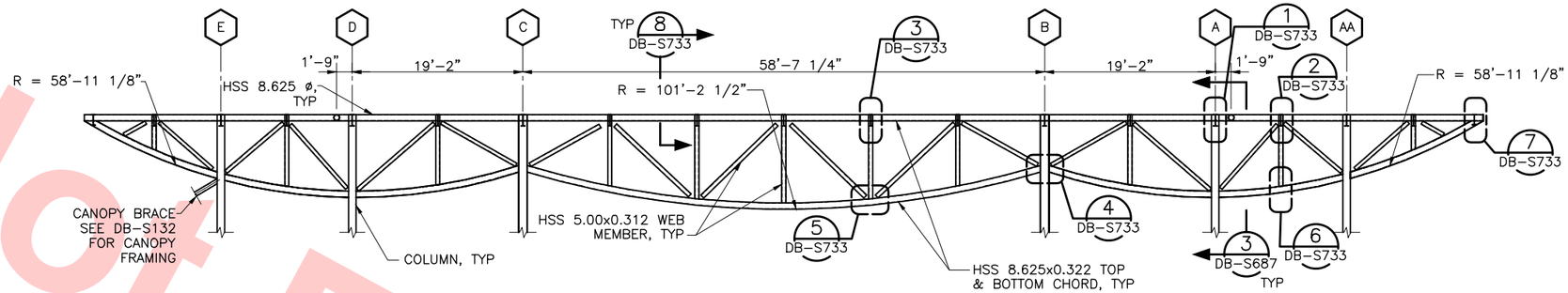

TRUSS – T1 (GRIDS 8 & 9)

SCALE: 1/8" = 1'–0"

DB–S142
DB–S143
DB–S144
DB–S145

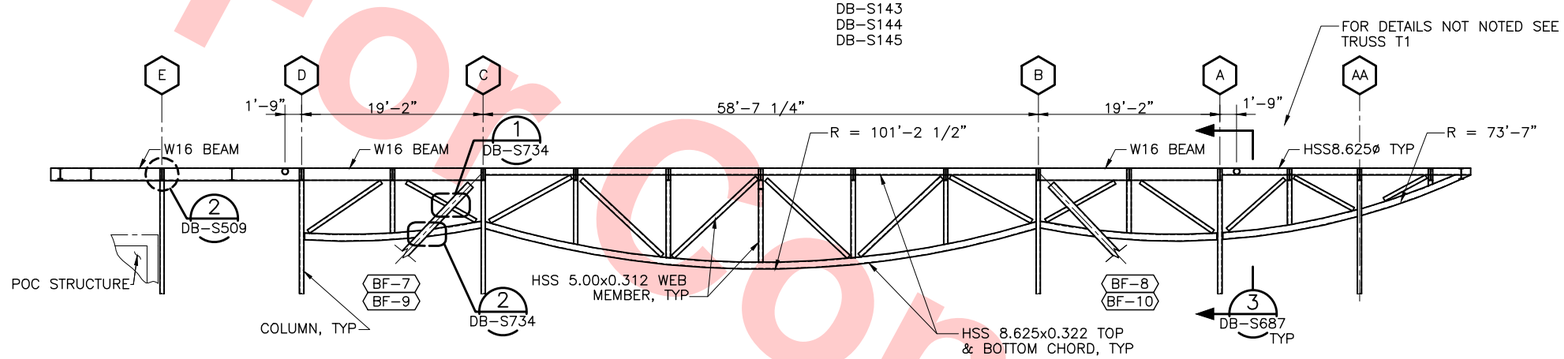

TRUSS – T2 (GRIDS 7 &10)

SCALE: 1/8" = 1'–0"

DB–S142
DB–S143
DB–S144
DB–S145

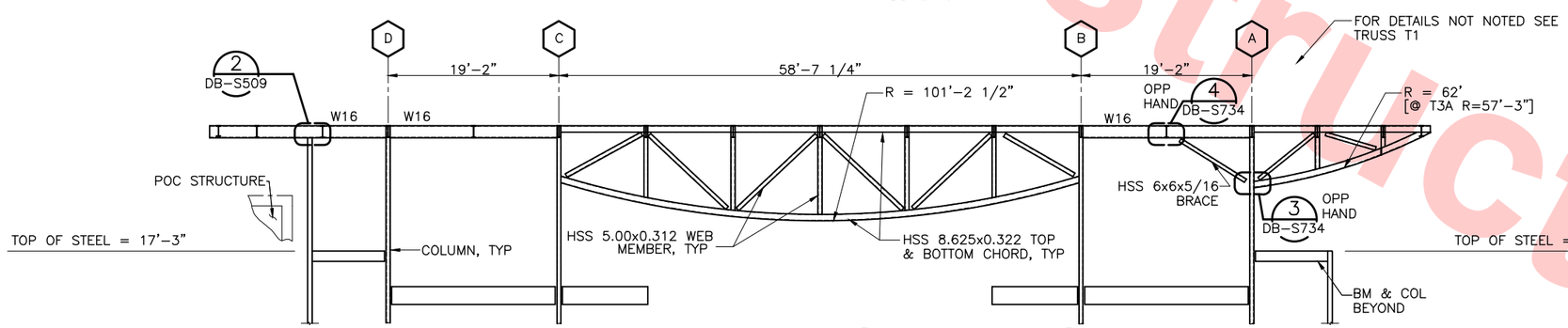

TRUSS – T3 (GRID 6) [T3A @ GRID 11]

SCALE: 1/8" = 1'–0"

DB–S142
DB–S143
DB–S144
DB–S145

Santa Clara Valley Transportation Authority

____NO EXCEPTIONS TAKEN (NET)
____MAKE CORRECTIONS NOTED (MCN)
____AMEND AND RESUBMIT (A/R)

Any action shown above is subject to the terms of the contract and does not relieve the Contractor of any of its obligations under the contract, including design and detailing.

Contract No.: DB11002F

By: _____ Date: _____

Not For Construction

REV	DATE	BY	SUB	APP	DESCRIPTION
0	20130710				READINESS FOR CONSTRUCTION

DESIGNED BY J. REBER, S.E.
DRAWN BY P. DIAZ
CHECKED BY M. TARAZI
IN CHARGE M. TARAZI
DATE 20130710

REGISTERED PROFESSIONAL ENGINEER SOHAIL FIAZ # S-3185 EXP.6/30/14 STRUCTURAL STATE OF CALIFORNIA

Skanska Shimmick Herzog
1436 California Circle
Milpitas, California 95035
A Joint Venture

MFT Consulting Engineers, Inc. Anil Verma Associates, Inc.
1773 San Pablo Ave., Suite A3 (510) 222-4106
Pinole, CA 94564 Fax (510) 222-4118

SUBMITTED

Lockwood, Andrews & Newnam, Inc. A LINA A RALY COMPANY
T-Y-LIN INTERNATIONAL

APPROVED

VTA. BART SILICON VALLEY
BART SILICON VALLEY BERRYESSA EXTENSION

LINE, TRACK, STATIONS AND SYSTEMS
DESIGN UNIT 023
MILPITAS STATION
ROOF TRUSS FRAMING
SECTIONS AND DETAILS
SHEET 1 OF 4

CADD FILENAME C700–S–DB–S731.dwg
SIZE D | SCALE 1/8" = 1'–0"
CONTRACT NO. C700 | REV. 0
AREA CODE DB | SHEET NO. S731 | PAGE NO. 0248

cad–02 Jul 05, 2013 – 1:56pm P:\BART Berryessa Extension Line\S – STRUCTURAL MILPITAS\WORK_6–10–2012\C700–S–DB–S731.dwg

NOTE:

1. FOR GENERAL NOTES, SEE DWG NO DB–S001X, DB–S002X, AND DB–S003X.
2. CLOUDED AREAS: DELETED TRUSS MEMBERS AND CHANGED TO WIDE FLANGE BEAMS AS THE TRUSS IS NOT EXPOSED TO THE PUBLIC.
3. BF–7 INDICATES BRACED FRAME. SEE STEEL FRAMING ELEVATIONS ON DB–S501, DB–S502 & DB–S503 SHEETS.

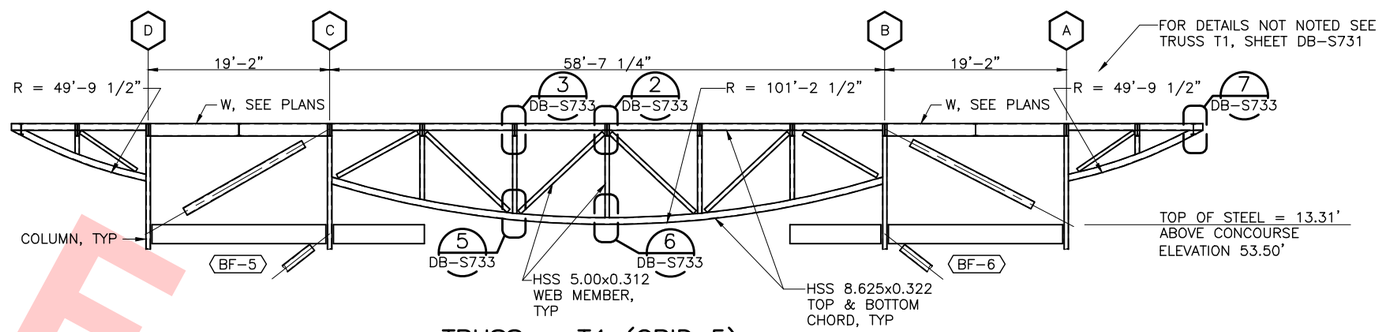

TRUSS – T4 (GRID 5)

SCALE: 1/8" = 1'–0"

DB–S142
DB–S143

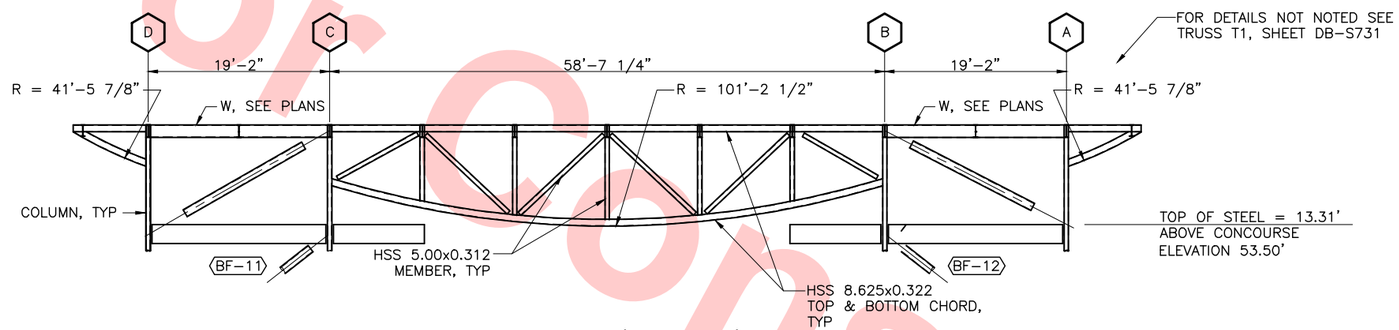

TRUSS – T5 (GRID 12)

SCALE: 1/8" = 1'–0"

DB–S144
DB–S145

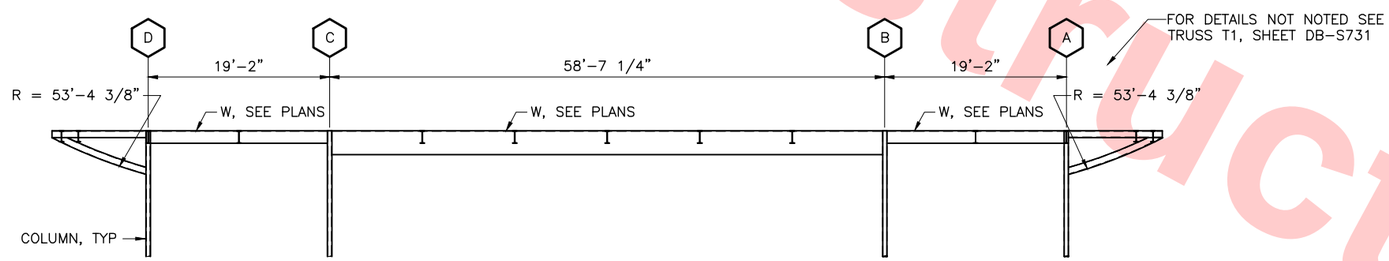

ELEVATION AT GRID 4

SCALE: 1/8" = 1'–0"

DB–S141

Santa Clara Valley Transportation Authority

____NO EXCEPTIONS TAKEN (NET)
____MAKE CORRECTIONS NOTED (MCN)
____AMEND AND RESUBMIT (A/R)

Any action shown above is subject to the terms of the contract and does not relieve the Contractor of any of its obligations under the contract, including design and detailing.

Contract No.: DB11002F

By: _____ Date: _____

Not For Construction

REV	DATE	BY	SUB	APP	DESCRIPTION
0	20130710				READINESS FOR CONSTRUCTION

DESIGNED BY J. REBER, S.E.
DRAWN BY P. DIAZ
CHECKED BY M. TARAZI
IN CHARGE M. TARAZI
DATE 20130710

REGISTERED PROFESSIONAL ENGINEER SOHAIL FUAD TAHA S-3185 EXP. 6/30/14 STRUCTURAL STATE OF CALIFORNIA

Skanska Shimmick Herzog
1436 California Circle
Milpitas, California 95035
A Joint Venture

MFT Consulting Engineers, Inc. Anil Verma Associates, Inc. 1773 San Pablo Ave., Suite A3 (510) 222-4106 Pinole, CA 94564 Fax (510) 222-5613
SUBMITTED

Lockwood, Andrews & Newnam, Inc. A CH2M HILL COMPANY | T·Y·LIN INTERNATIONAL
APPROVED

VTA BART SILICON VALLEY
BART SILICON VALLEY BERRYESSA EXTENSION

LINE, TRACK, STATIONS AND SYSTEMS
DESIGN UNIT 023
MILPITAS STATION
ROOF TRUSS FRAMING
SECTIONS AND DETAILS
SHEET 2 OF 4

CADD FILENAME C700–S–DB–S732.dwg
SIZE D | SCALE 1/8" = 1'–0"
CONTRACT NO. C700 | REV. 0
AREA CODE DB | SHEET NO. S732 | PAGE NO. 0249

cad–02 Jul 05, 2013 – 1:56pm P:\BART Berryessa Extension Line\S – STRUCTURAL, MILPITAS\WORK_6–10–2012\C700–S–DB–S732.dwg

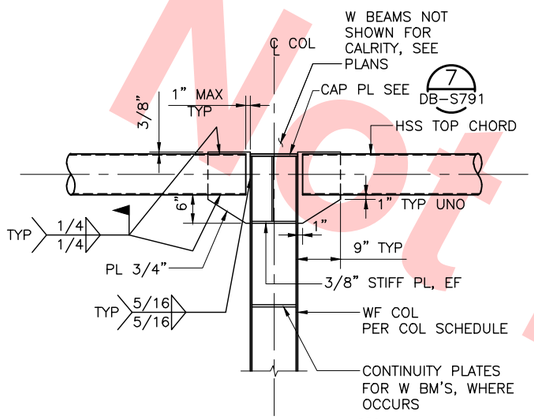

DETAIL 1 DB-S731 DB-S732 DB-S733
SCALE: 3/4" = 1'-0"

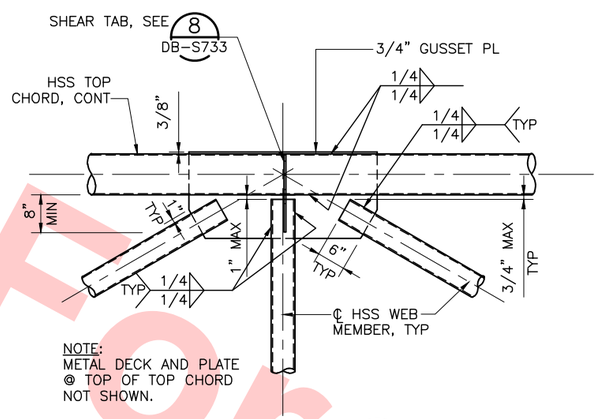

DETAIL 2 DB-S731 DB-S732 DB-S733
SCALE: 3/4" = 1'-0"

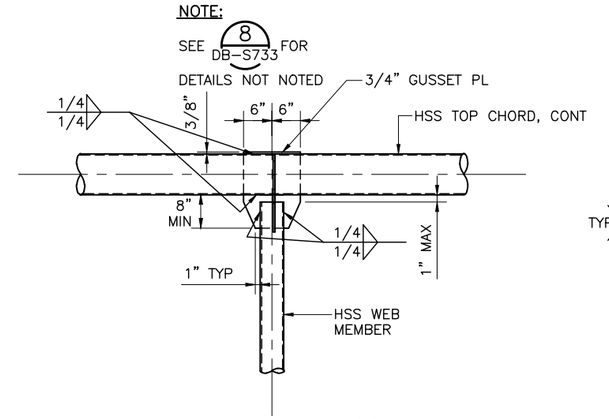

DETAIL 3 DB-S731 DB-S732 DB-S733
SCALE: 3/4" = 1'-0"

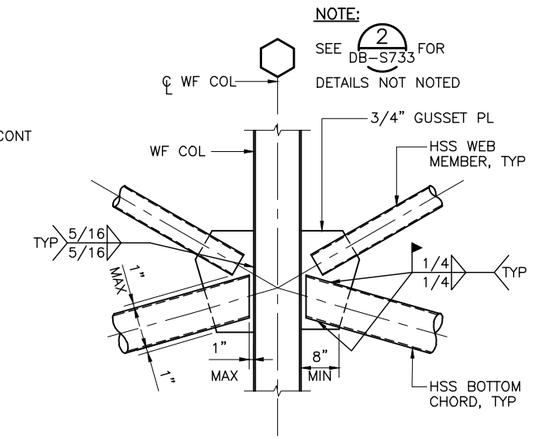

DETAIL 4 DB-S731 DB-S733
SCALE: 3/4" = 1'-0"

Not For Construction

Santa Clara Valley Transportation Authority

____NO EXCEPTIONS TAKEN (NET)
____MAKE CORRECTIONS NOTED (MCN)
____AMEND AND RESUBMIT (A/R)

Any action shown above is subject to the terms of the contract and does not relieve the Contractor of any of its obligations under the contract, including design and detailing.

Contract No.: DB11002F

By: _____ Date: _____

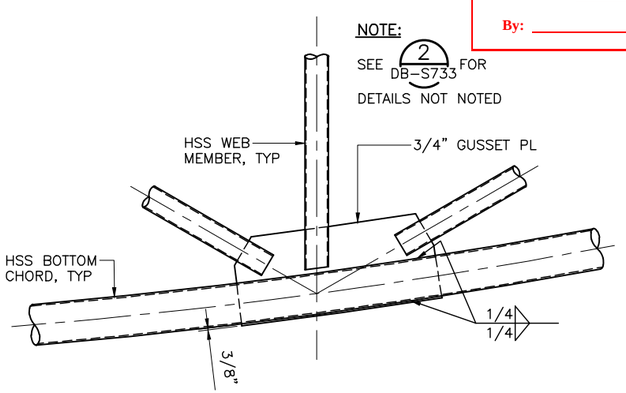

DETAIL 5 DB-S731 DB-S732 DB-S733
SCALE: 3/4" = 1'-0"

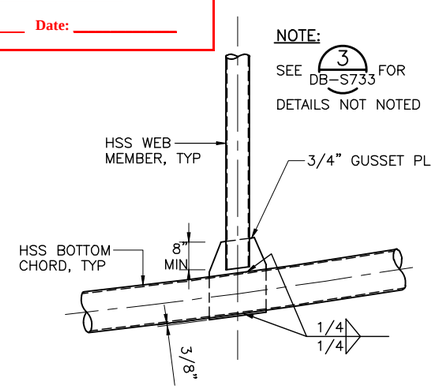

DETAIL 6 DB-S731 DB-S732 DB-S733
SCALE: 3/4" = 1'-0"

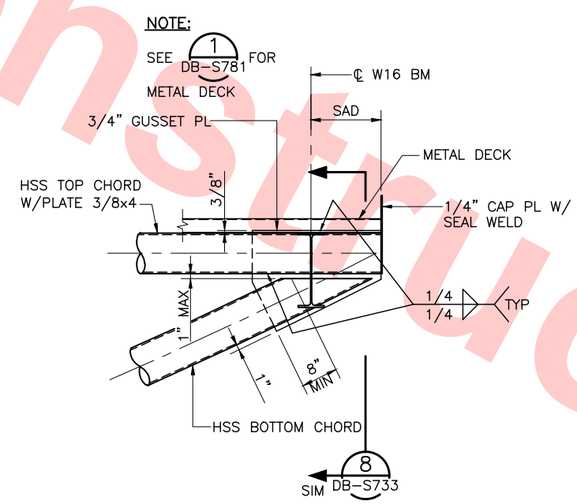

DETAIL 7 DB-S731 DB-S732 DB-S733
SCALE: 3/4" = 1'-0"

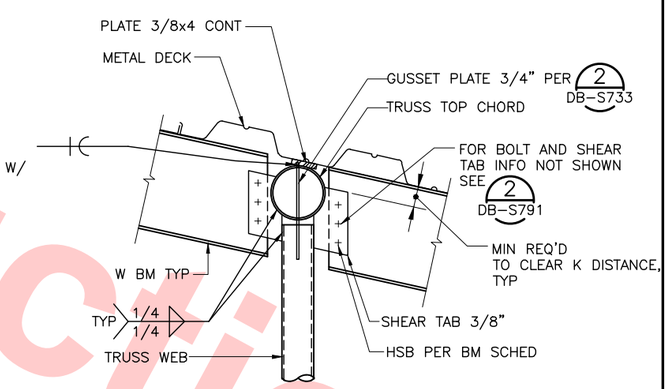

SECTION 8 DB-S731 DB-S733
SCALE: 1" = 1'-0"

REV	DATE	BY	SUB	APP	DESCRIPTION
0	20130710				READINESS FOR CONSTRUCTION

DESIGNED BY J. REBER, S.E.
DRAWN BY P. DIAZ
CHECKED BY M. TARAZI
IN CHARGE M. TARAZI
DATE 20130710

REGISTERED PROFESSIONAL ENGINEER SIGNAL FUAD RAMIZI # S-3185 EXP. 8/30/14 STRUCTURAL STATE OF CALIFORNIA

Skanska Shimmick Herzog
1436 California Circle
Milpitas, California 95035
A Joint Venture

MFT Consulting Engineers, Inc. Anil Verma Associates, Inc.
1773 San Pablo Ave., Suite A3 (510) 222-4106
Pinole, CA 94564 Fax (510) 222-5418

Lockwood, Andrews & Newnam, Inc. A LAN & NAV COMPANY
T·Y·LIN INTERNATIONAL

SUBMITTED _____ APPROVED _____

VTA BART SILICON VALLEY
BART SILICON VALLEY BERRYESSA EXTENSION

LINE, TRACK, STATIONS AND SYSTEMS
DESIGN UNIT 023
MILPITAS STATION
ROOF TRUSS FRAMING
SECTIONS AND DETAILS
SHEET 3 OF 4

CADD FILENAME C700-S-DB-S733.dwg
SIZE D | SCALE AS NOTED
CONTRACT NO. C700 | REV. 0
AREA CODE DB | SHEET NO. S733 | PAGE NO. 0250

cad-02 Jul 05, 2013 - 1:56pm P:\BART Berryessa Extension Line\S - STRUCTURAL MILPITAS\WORK_6-10-2012\C700-S-DB-S733.dwg

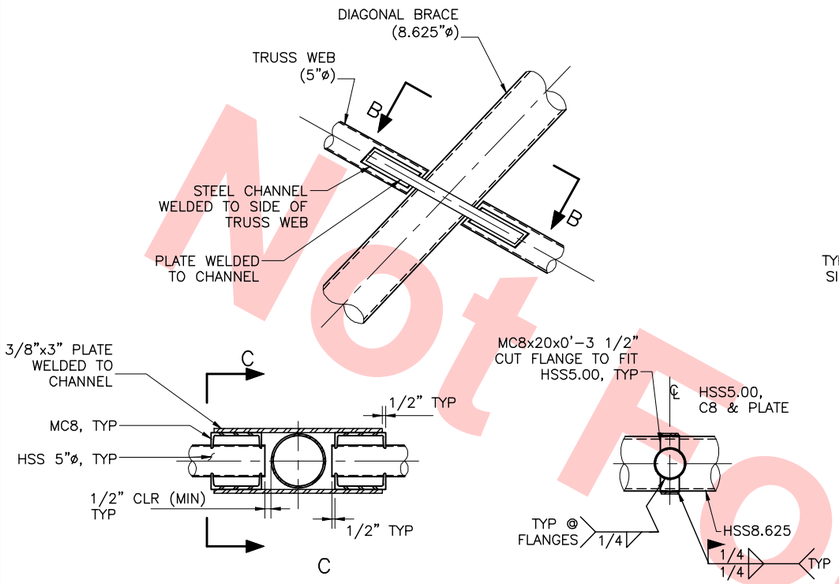

SECTION B–B

SECTION C–C

DETAIL 1 DB–S734 DB–S731 DB–S502
SCALE: 1"=1'–0"

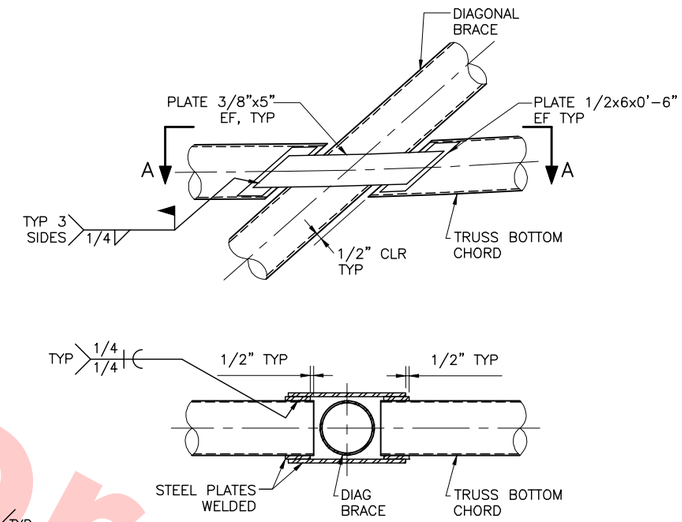

SECTION A–A

DETAIL 2 DB–S734 DB–S731 DB–S502
SCALE: 3/4"=1'–0"

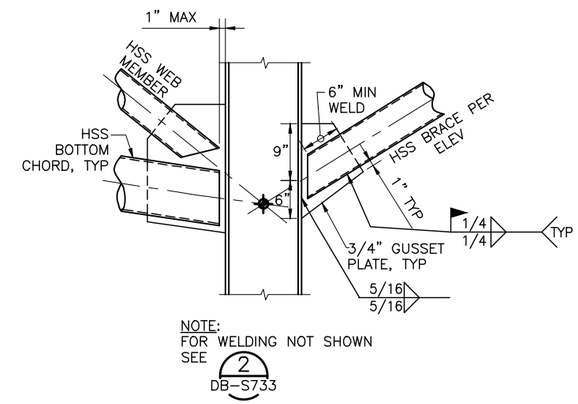

NOTE:
FOR WELDING NOT SHOWN SEE 2 DB–S733

DETAIL 3 DB–S734 DB–S731
SCALE: 1"=1'–0"

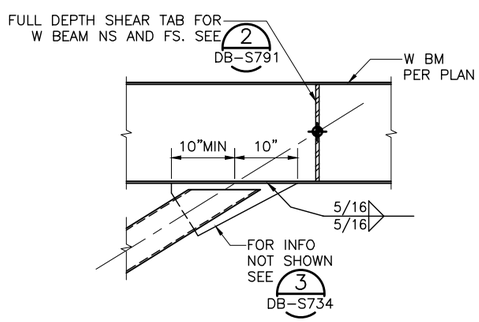

DETAIL 4 DB–S734 DB–S731
SCALE: 1"=1'–0"

Santa Clara Valley Transportation Authority

____NO EXCEPTIONS TAKEN (NET)
____MAKE CORRECTIONS NOTED (MCN)
____AMEND AND RESUBMIT (A/R)

Any action shown above is subject to the terms of the contract and does not relieve the Contractor of any of its obligations under the contract, including design and detailing.

Contract No.: DB11002F

By: _____ Date: _____

Not For Construction

REV	DATE	BY	SUB	APP	DESCRIPTION
0	20130710				READINESS FOR CONSTRUCTION

DESIGNED BY J. REBER, S.E.
DRAWN BY P. DIAZ
CHECKED BY M. TARAZI
IN CHARGE M. TARAZI
DATE 20130710

REGISTERED PROFESSIONAL ENGINEER SOHAN FUAD VERMA # S-3185 EXP. 6/30/14 STRUCTURAL STATE OF CALIFORNIA

Skanska Shimmick Herzog
1436 California Circle
Milpitas, California 95035
A Joint Venture

MFT CONSULTING ENGINEERS, INC. Anil Verma Associates, Inc.
1773 San Pablo Ave., Suite A3 (510) 222-4106
Pinole, CA 94564 Fax (510) 222-4118
SUBMITTED

Lockwood, Andrews & Newnam, Inc. A LEO A DALY COMPANY
T·Y·LIN INTERNATIONAL
APPROVED

BART SILICON VALLEY
BART SILICON VALLEY BERRYESSA EXTENSION

LINE, TRACK, STATIONS AND SYSTEMS
DESIGN UNIT 023
MILPITAS STATION
ROOF TRUSS FRAMING
SECTIONS AND DETAILS
SHEET 4 OF 4

CADD FILENAME C700–S–DB–S734.dwg
SIZE D | SCALE INDICATED
CONTRACT NO. C700 | REV. 0
AREA CODE DB | SHEET NO. S734 | PAGE NO. 0251

cad–02 Jul 05, 2013 – 1:56pm P:\BART Berryessa Extension Line\S – STRUCTURAL MILPITAS\WORK_6-10-2012\C700-S-DB-S734.dwg

FOOTING (F) SCHEDULE				
F#	SIZE (WXLXD)	BOT REBAR	TOP REBAR	REMARKS
F1	2'–6"x2'–6"x2'–0"	3#6		
F2	3'–0"x3'–0"x2'–0"	4#6		
F3	4'–0"x4'–0"x2'–0"	5#6		
F4	5'–0"x5'–0"x2'–0"	6#6		
F5	6'–0"x6'–0"x2'–0"	8#6		
F6	6'–6"x6'–6"x2'–0"	8#6		
F7	7'–0"x7'–0"x3'–0"	14#6		
F8	12'–6"x6'–0"x3'–0"	22#6 T 12#6 L	22#6 T 12#6 L	T=TRANSVERSAL L=LONGITUDINAL
F9	8'–0"x8'–0"x4'–0"	#7@10"OC EW	#7@10"OC EW	SEE SECTION 4/DB–S649
F10	13'–0"x8'–0"x7'–0"	#8@10"OC EW	#8@10"OC EW	SEE SECTION 1/DB–S649
F11	6'–0"xLENGTH PER PLANx4'–0"	#7@10"OC EW	#7@10"OC EW	SEE SECTION 3/DB–S649
F12	6'–0"xLENGTH PER PLANx7'–0"	#8@10"OC EW	#8@10"OC EW	SEE SECTION 4/DB–S650
F13	13'–0"x8'–0"x7'–0"	#8@10"OC EW	#8@10"OC EW	SEE SECTION 4/DB–S650
F14				
F15				
F16				
F17				

NOTE:
1. SEE 2 DB–S750 FOR FOOTING PROFILE AT STEEL COLUMN

FOOTING SCHEDULE
SCALE: NTS
1 DB–S750 DB–S121

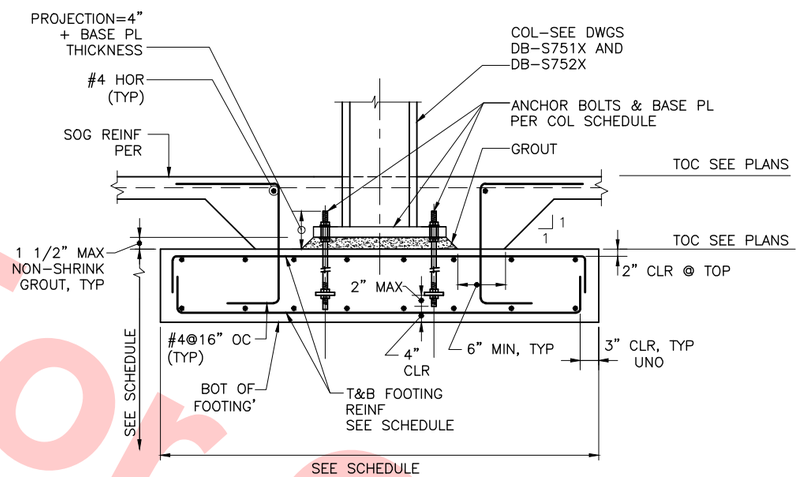

TYPICAL SPREAD FOOTING @ ST'L COL.
SCALE: NTS
2 DB–S750 DB–S750

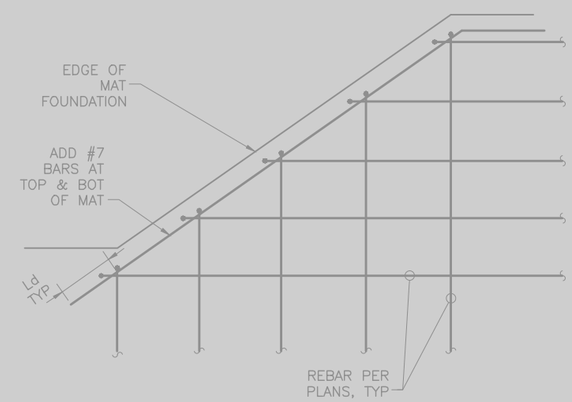

EDGE OF MAT SLANTED END CONDITION
SCALE: NTS
3 DB–S750 DB–S071

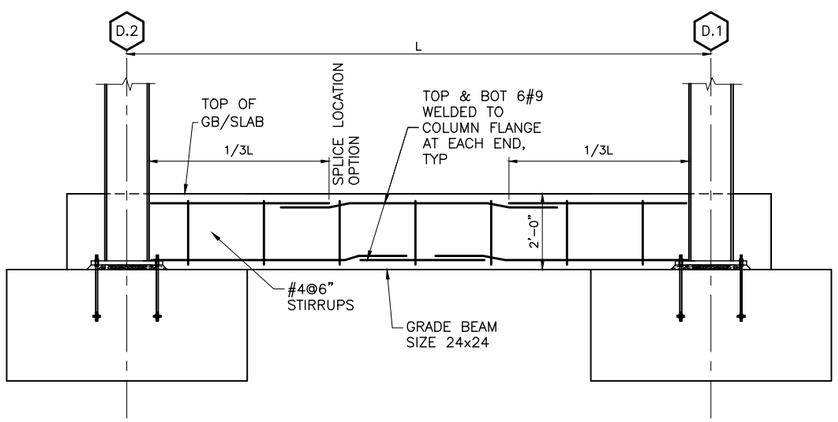

GRADE BEAM ELEVATION
SCALE: NTS
4 DB–S750 DB–S125

NOTE TO REVIEWER(S):
DO NOT REVIEW AREAS DESIGNATED AS

Santa Clara Valley Transportation Authority

____NO EXCEPTIONS TAKEN (NET)
____MAKE CORRECTIONS NOTED (MCN)
____AMEND AND RESUBMIT (A/R)

Any action shown above is subject to the terms of the contract and does not relieve the Contractor of any of its obligations under the contract, including design and detailing.

Contract No.: DB11002F

By: _____ Date: _____

Not For Construction

REV	DATE	BY	SUB	APP	DESCRIPTION
0	20130710				READINESS FOR CONSTRUCTION
0	20130531				READINESS FOR CONSTRUCTION

DESIGNED BY J. REBER, S.E.
DRAWN BY P. DIAZ
CHECKED BY M. TARAZI
IN CHARGE M. TARAZI
DATE 20130710

REGISTERED PROFESSIONAL ENGINEER SOHAIL FUAD TAYEH # S-5185 EXP. 6/30/14 STRUCTURAL STATE OF CALIFORNIA

Skanska Shimmick Herzog
1436 California Circle Milpitas, California 95035
A Joint Venture

MFT Consulting Engineers, Inc. Anil Verma Associates, Inc.
1773 San Pablo Ave., Suite A3 (510) 222-4106
Pinole, CA 94564 Fax (510) 222-4116
SUBMITTED

Lockwood, Andrews & Newnam, Inc. A LEO A DALY COMPANY
T-Y-LIN INTERNATIONAL
APPROVED

VTA BART SILICON VALLEY
BART SILICON VALLEY BERRYESSA EXTENSION

LINE, TRACK, STATIONS AND SYSTEMS
DESIGN UNIT 023
MILPITAS STATION
FOUNDATION SCHEDULE
AND DETAILS
SHEET 1 OF 1

CADD FILENAME C700–S–DB–S750.dwg
SIZE D | SCALE AS NOTED
CONTRACT NO. C700 | REV. 0
AREA CODE DB | SHEET NO. S750 | PAGE NO. 0252

cad–02 Jul 05, 2013 – 1:56pm P:\BART Berryessa Extension Line\S – STRUCTURAL MILPITAS\WORK_6–10–2012\C700–S–DB–S750.dwg

COLUMN GRID / LEVEL	AA7	AA8	AA9	AA10	AB/6.1	AB/10.9	A2	A3	A4	A5	A6	A7	A8	A9	A10	A11	A12	A.8/0.3	B1	B2	B2.5	B3	B3.5	B4	B5	B6	B7	B8	B9	B10	B11	B12	B13	B13.5	B14
ROOF								2 DB-S756 TYP																											
ENTRY LEVEL ROOF / CONCOURSE	W12x96	W12x72	W12x72	W12x96	HSS 6x6x1/4	HSS 6x6x1/4	W10x49	W10x68	W10x49	W12x96	W12x96	W12x96	W12x72	W12x72	W12x96	W12x96	W12x96	W10x68	W10x68	W10x68		W10x68		W10x49	W12x96	W12x96	W14x132	W14x99	W14x99	W14x132	W12x96	W12x96			
BASE PLATE INFO: BOTT OF BASE PL ELEVATION																																			
BASE PLATE INFO: TYPE (SEE 2/DB-S752X)	SEE NOTE 5			SEE NOTE 5	5 DB-S756		2B DB-S752X	SEE NOTE 5	2B DB-S752X	SEE NOTE 5	SEE NOTE 5	SEE NOTE 5			SEE NOTE 5	SEE NOTE 5	SEE NOTE 5	SEE NOTE 5	SEE NOTE 5	SEE NOTE 5		SEE NOTE 5		2B DB-S	SEE NOTE 5	SEE NOTE 5	SEE NOTE 5	2B DB-S752X		SEE NOTE 5	SEE NOTE 5	SEE NOTE 5			
BASE PLATE INFO: THICKNESSx WIDTHxLENGTH FOR BASE PL ORIENTATION)		PLATE 3/4"x 20"x 1'-8"	PLATE 3/4"x 20"x 1'-8"				PLATE 3/4"x 18"x 1'-6"		PLATE 1"x18" x1'-6"				PLATE 3/4"x 20"x 1'-8"	PLATE 3/4"x 20"x 1'-8"										PLATE 1"x18" x1'-6"				PLATE 3/4"x 22"x 1'-10"	PLATE 3/4"x 22"x 1'-10"						
ANCHOR BOLTS NO & SIZE FOR BOLT DETAIL)																																			
CONCOURSE LEVEL																																			
PLATFORM LEVEL										14#9&8#8	14#9&8#8					14#9&8#8	14#9&8#8		14#8&6#7	14#8&6#7	14#8&6#7	14#8&6#7	14#8&6#7	14#9&8#8	14#9&8#8	14#9&8#8	16#10&8#9	16#10&8#9	16#10&8#9	16#10&8#9	14#9&8#8	14#9&8#8	16#10&8#9	10#10&18#7	10#10&18#7
BOTTOM OF FOUNDATION																																			

COLUMN GRID / LEVEL	B14.5	B15	B15.5	B16	B16.5	B17	B.2/0.3	B.8/0.3	C1	C2	C2.5	C3	C3.5	C4	C5	C6	C7	C8	C9	C10	C11	C12	C13	C13.5	C14	C14.5
ROOF																										
CONCOURSE							W10x68	W10x68	W10x68	W10x68		W10x68		W10x49	W12x96	W12x96	W14x132	W14x99	W14x99	W14x132	W12x96	W12x96				
BASE PLATE INFO: BOTT OF BASE PL ELEVATION																										
BASE PLATE INFO: TYPE (SEE 2/DB-S752X)							SEE NOTE 5	SEE NOTE 5	SEE NOTE 5	SEE NOTE 5		SEE NOTE 5			SEE NOTE 5	SEE NOTE 5	SEE NOTE 5	2B DB-S752X		SEE NOTE 5	SEE NOTE 5	SEE NOTE 5			
BASE PLATE INFO: THICKNESSx WIDTHxLENGTH FOR BASE PL ORIENTATION)														PLATE 1"x18" x1'-6"				PLATE 3/4"x 22"x 1'-10"	PLATE 3/4"x 22"x 1'-10"							
ANCHOR BOLTS NO & SIZE FOR BOLT DETAIL)																										
CONCOURSE LEVEL																										
PLATFORM LEVEL	10#10&18#7	10#10&18#7	10#10&18#7	10#10&18#7	10#10&18#7	10#10&18#7			14#8&6#7	14#8&6#7	14#8&6#7	14#8&6#7	14#8&6#7	14#9&8#8	14#9&8#8	14#9&8#8	16#10&8#9	16#10&8#9	16#10&8#9	16#10&8#9	14#9&8#8	14#9&8#8	16#10&8#9	10#10&18#7	10#10&18#7	10#10&18#7
BOTTOM OF FOUNDATION																										

NOTES:

1. ALL WIDE FLANGE COLUMNS SHALL BE ASTM A992 GRADE 50.
2. IT IS OPTIONAL TO SPLICE THE WIDE FLANGE COLUMNS PER DETAIL 1/DB-S756. THE COLUMN SPLICES ARE LOCATED FOUR FEET ABOVE THE FLOOR LEVEL.
3. AT WIDE FLANGE COLUMNS ANCHOR BOLTS ARE ONE INCH DIAMETER ASTM A449 U.N.O. AT HSS COLUMNS ANCHOR BOLTS ARE 3/4 INCH DIAMETER ASTM A449 U.N.O. FOUR ANCHOR BOLTS FOR EACH BASE PLATE. PROVIDE EMBEDMENT INTO THE FOOTING SUCH THAT BOT. OF BOLT IS 4" CLR FROM BOTTOM OF FOOTING. THE ANCHOR BOLTS REQUIRE SPECIAL INSPECTION PER CONSTRUCTION SPECIFICATION.
4. ALL BASE PLATE MATERIAL SHALL BE Fy=50 KSI.
5. FOR BASE PLATE DETAILS AT BRACED FRAMES, SEE BRACED FRAME ELEVATIONS ON DWG DB-S501, DB-S502 & DB-S503.
6. REFER TO DRAWING DB-S755 DETAIL 1 FOR TYPICAL CONCRETE COLUMN ELEVATION

Santa Clara Valley Transportation Authority

___NO EXCEPTIONS TAKEN (NET)
___MAKE CORRECTIONS NOTED (MCN)
___AMEND AND RESUBMIT (A/R)

Any action shown above is subject to the terms of the contract and does not relieve the Contractor of any of its obligations under the contract, including design and detailing.

Contract No.: DB11002F

By: _____ Date: _____

Not for Construction

NOTE TO REVIEWER(S):
DO NOT REVIEW AREAS DESIGNATED AS

CONCRETE AND STEEL COLUMN SCHEDULE

SCALE: N.T.S.
DB-S751X

REV	DATE	BY	SUB	APP	DESCRIPTION
0	20130710				READINESS FOR CONSTRUCTION
0	20130531				READINESS FOR CONSTRUCTION
					REPLACED C700-S-DB-S751 REV P.

DESIGNED BY J. REBER, S.E.
DRAWN BY P. DIAZ
CHECKED BY M. TARAZI
IN CHARGE M. TARAZI
DATE 20130710

SUBMITTED

Skanska Shimmick Herzog
1436 California Circle
Milpitas, California 95035
A Joint Venture

MFT Consulting Engineers, Inc. 1773 San Pablo Ave., Suite A3 Pinole, CA 94564 (510) 222-4106 Fax (510) 222-4418
Anil Verma Associates, Inc.
Lockwood, Andrews & Newnam, Inc. A LEO A DALY COMPANY
T-Y-LIN INTERNATIONAL

APPROVED

BART SILICON VALLEY BERRYESSA EXTENSION

LINE, TRACK, STATIONS AND SYSTEMS
DESIGN UNIT 023
MILPITAS STATION
CONCRETE AND STEEL COLUMNS
SCHEDULE AND DETAILS
SHEET 1 OF 6

CADD FILENAME C700-S-DB-S751X.dwg
SIZE D | SCALE NONE
CONTRACT NO. C700 | REV. 0
AREA CODE DB | SHEET NO. S751X | PAGE NO. 0253

cad-02 Jul 05, 2013 - 1:56pm P:\BART Berryessa Extension Line\S - STRUCTURAL MILPITAS\WORK_6-10-2012\C700-S-DB-S751X.dwg

COLUMN GRID / LEVEL	C15	C15.5	C16	C16.5	C17	C.3/0.3	D2	D3	D4	D5	D6	D7	D8	D9	D10	D11	D12	D.6/6.1	D.6/11	D.1/9.5	D.1/9.6 *	D.1/9.8 *	D.1/10.1 *	D.1/10.6 *	D.1/11.1 *	D.2/9.6 *	D.2/9.8 *	D.2/10.1 *	D.2/10.6 *	D.2/11.1 *	D.3/10.6	D.3/11.1	E7	E8	E9	E10
ROOF																				HSS 6x6x5/16																
ENTRY LOW ROOF						W10x68	W10x49	W10x68	W10x49	W12x96	W12x96	W12x96	W12x72	W12x72	W12x96	W12x96	W12x96	HSS 6x6x1/4	W10x68		W12x50	W12x50	W14x82	W14x82	W12x50	W12x50	W12x50	W14x82	W14x82	W12x50	W14x159	W14x159	W12x96	W12x72	W12x72	W12x96
CONCOURSE																																				
BASE PLATE INFO: BOTT OF BASE PL ELEVATION																																				
BASE PLATE INFO: TYPE (SEE 2/DB-S752X)						SEE NOTE 5	2B DB-S752X	SEE NOTE 5	2B DB-S752X	SEE NOTE 5	SEE NOTE 5	SEE NOTE 5			SEE NOTE 5	SEE NOTE 5	SEE NOTE 5	5 DB-S756														SEE NOTE 5			SEE NOTE 5
BASE PLATE INFO: THICKNESSxWIDTH xLENGTH (FOR BASE PL ORIENTATION)							PLATE 3/4"x 18"x 1'-6"		PLATE 3/4"x 18"x 1'-6"				PLATE 3/4"x 20"x 1'-8"	PLATE 3/4"x 20"x 1'-8"																				PLATE 3/4"x 20"x 1'-8"	PLATE 3/4"x 20"x 1'-8"	
ANCHOR BOLTS NO & SIZE FOR BOLT DETAIL)																																				
CONCOURSE LEVEL																																				
PLATFORM LEVEL	10#10&18#7	10#10&18#7	10#10&18#7	10#10&18#7	10#10&18#7					14#9&8#8	14#9&8#8					14#9&8#8	14#9&8#8																			
BOTTOM OF FOUNDATION																																				

CONCRETE AND STEEL COLUMN SCHEDULE

SCALE: N.T.S.

DB-S752X

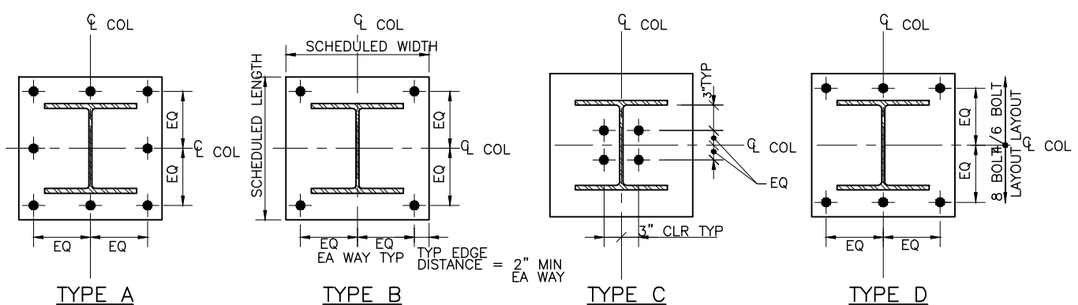

TYP COL PLATES (2) DB-S752X DB-S751X

SCALE: 1"=1'-0"

NOTES:

1. ALL WIDE FLANGE COLUMNS SHALL BE ASTM A992 GRADE 50.
2. IT IS OPTIONAL TO SPLICE THE WIDE FLANGE COLUMNS PER DETAIL 1/DB-S756. THE COLUMN SPLICES ARE LOCATED FOUR FEET ABOVE THE FLOOR LEVEL.
3. AT WIDE FLANGE COLUMNS ANCHOR BOLTS ARE ONE INCH DIAMETER ASTM A449 U.N.O. AT HSS COLUMNS ANCHOR BOLTS ARE 3/4 INCH DIAMETER ASTM A449 U.N.O. FOUR ANCHOR BOLTS FOR EACH BASE PLATE. PROVIDE EMBEDMENT INTO THE FOOTING SUCH THAT BOT. OF BOLT IS 3" CLR FROM BOTTOM OF FOOTING. THE ANCHOR BOLTS REQUIRE SPECIAL INSPECTION PER CBC 2010 SECTION 1704.4
4. ALL BASE PLATE MATERIAL SHALL BE Fy=50 KSI.
5. FOR BASE PLATE DETAILS AT BRACED FRAMES, SEE BRACED FRAME ELEVATIONS ON DB-S501, DB-S502 & DB-S503.

   WHERE INDICATED (*) ON SCHEDULES REFER TO STEEL FRAME ELEVATIONS DB-S136 AND DB-S137 FOR DOUBLER PLATE LOCATIONS.
6. REFER TO DRAWING DB-S755 DETAIL 1 FOR TYPICAL CONCRETE COLUMN ELEVATION

Santa Clara Valley Transportation Authority

____NO EXCEPTIONS TAKEN (NET)
____MAKE CORRECTIONS NOTED (MCN)
____AMEND AND RESUBMIT (A/R)

Any action shown above is subject to the terms of the contract and does not relieve the Contractor of any of its obligations under the contract, including design and detailing.

Contract No.: DB11002F

By: _____ Date: _____

NOTE TO REVIEWER(S):
DO NOT REVIEW AREAS DESIGNATED AS

Not For Construction

REV	DATE	BY	SUB	APP	DESCRIPTION
0	20130710				READINESS FOR CONSTRUCTION
0	20130531				READINESS FOR CONSTRUCTION
					REPLACED C700-S-DB-S752 REV P.

DESIGNED BY J. REBER, S.E.
DRAWN BY P. DIAZ
CHECKED BY M. TARAZI
IN CHARGE M. TARAZI
DATE 20130710

REGISTERED PROFESSIONAL ENGINEER SOHAIL FUAD TAHA # S-5185 EXP. 6/30/14 STRUCTURAL STATE OF CALIFORNIA

Skanska Shimmick Herzog
1436 California Circle
Milpitas, California 95035
A Joint Venture

MFT Consulting Engineers, Inc. Anil Verma Associates, Inc.
1773 San Pablo Ave., Suite A3 (510) 222-4106
Pinole, CA 94564 Fax (510) 222-5618

SUBMITTED

Lockwood, Andrews & Newnam, Inc. A LAN & NAV COMPANY
T-Y-LIN INTERNATIONAL

APPROVED

VTA BART SILICON VALLEY
BART SILICON VALLEY BERRYESSA EXTENSION

LINE, TRACK, STATIONS AND SYSTEMS
DESIGN UNIT 023
MILPITAS STATION
CONCRETE AND STEEL COLUMNS
SCHEDULE AND DETAILS
SHEET 2 OF 6

CADD FILENAME C700-S-DB-S752X.dwg
SIZE D | SCALE AS NOTED
CONTRACT NO. C700 | REV. 0
AREA CODE DB | SHEET NO. S752X | PAGE NO. 0254

cad-02 Jul 05, 2013 - 1:56pm P:\BART Berryessa Extension Line\S - STRUCTURAL MILPITAS\WORK_6-10-2012\C700-S-DB-S752X.dwg

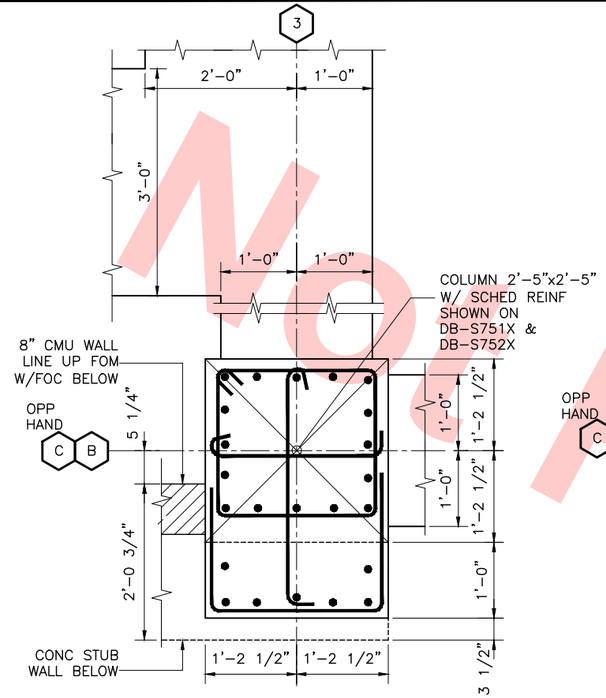

DETAIL @ PLATFORM LEVEL 1 DB-S753 DB-S111
SCALE: 1"=1'-0"

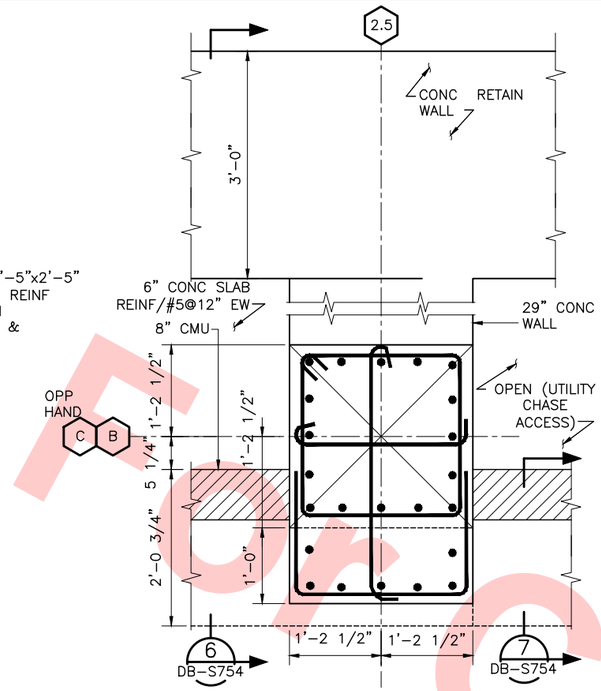

DETAIL @ PLATFORM LEVEL 2 DB-S753 DB-S111
SCALE: 1"=1'-0"

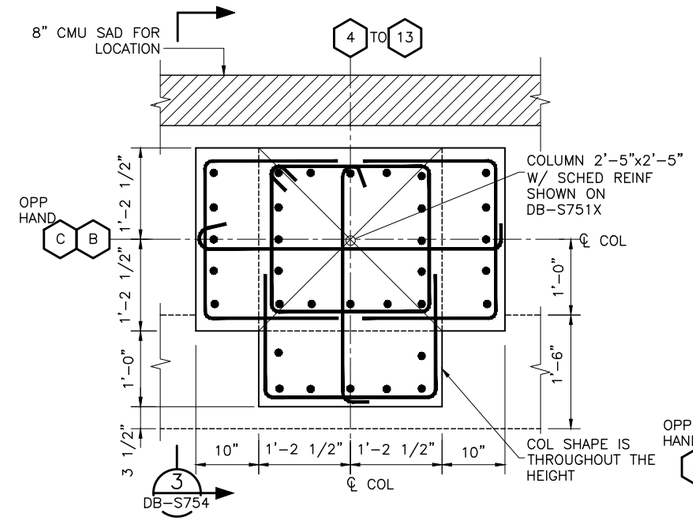

DETAIL @ PLATFORM 3 DB-S753 DB-S111 DB-S112 DB-S113 DB-S114
SCALE: 1"=1'-0"

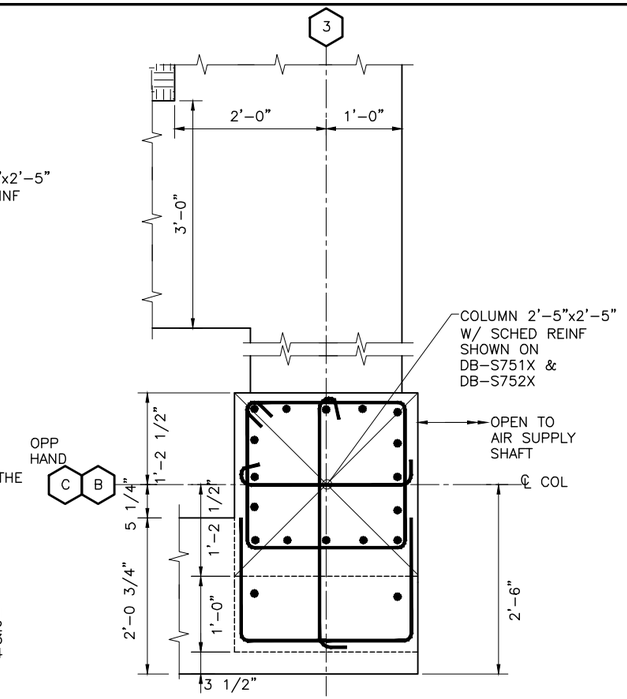

DETAIL @ MAT FOUNDATION 4 DB-S753 DB-S071
SCALE: 1"=1'-0"

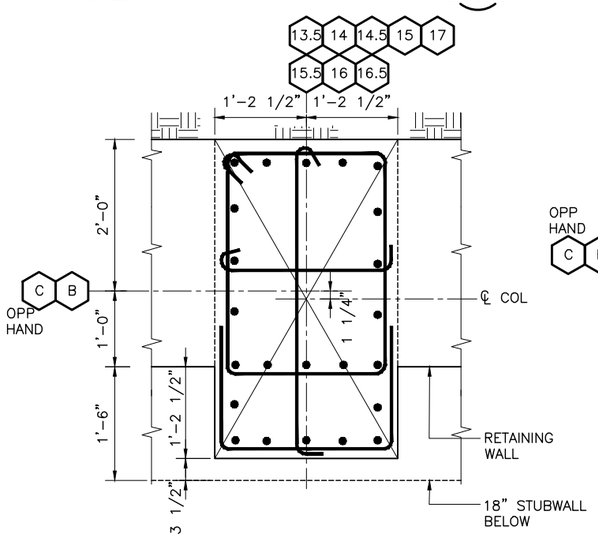

DETAIL @ PLATFORM LEVEL 5 DB-S753 DB-S114 DB-S115
SCALE: 1"=1'-0"

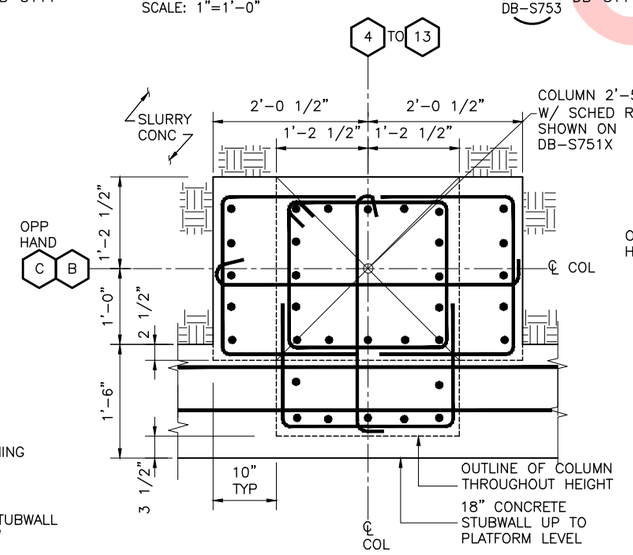

DETAIL @ MAT FOUNDATION 6 DB-S753 DB-S071 DB-S072 DB-S073 DB-S074
SCALE: 1"=1'-0"

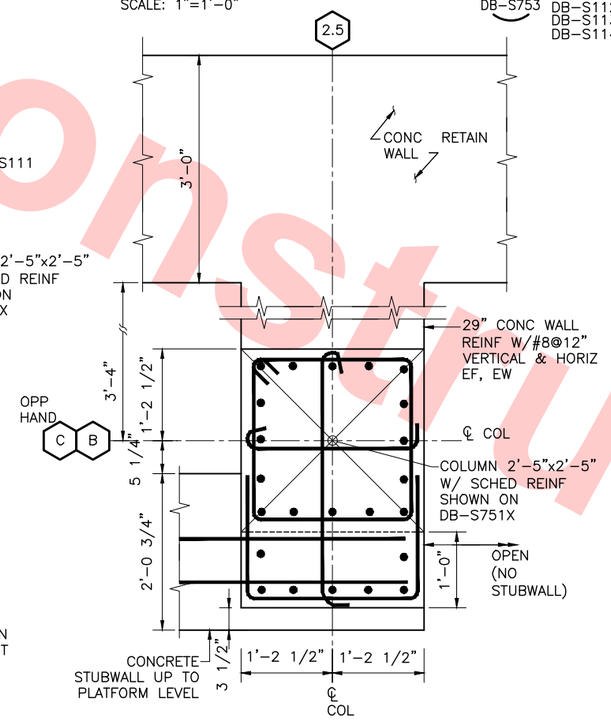

DETAIL @ MAT FOUNDATION 7 DB-S753 DB-S071
SCALE: 1"=1'-0"

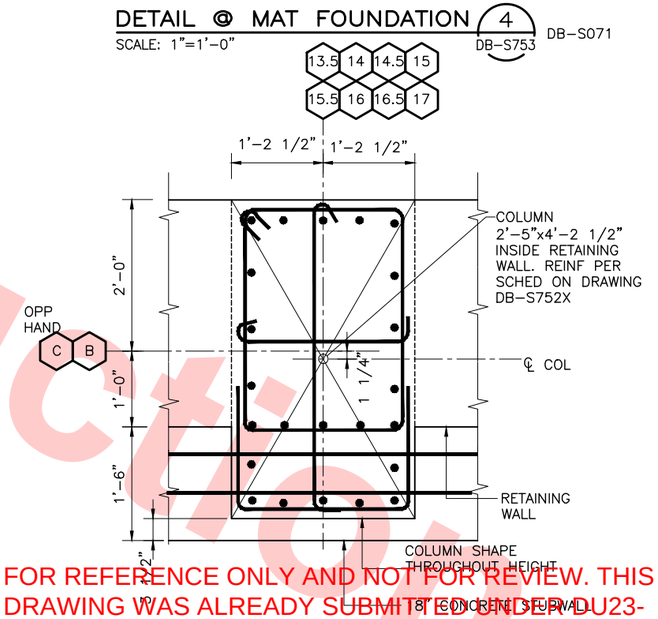

DETAIL @ MAT FOUNDATION 8 DB-S753 DB-S074 DB-S075
SCALE: 1"=1'-0"

Not For Construction

FOR REFERENCE ONLY AND NOT FOR REVIEW. THIS DRAWING WAS ALREADY SUBMITTED UNDER DU23-WP08 RFC TRENCH PACKAGE

REV	DATE	BY	SUB	APP	DESCRIPTION
0	20130531				READINESS FOR CONSTRUCTION

DESIGNED BY J. REBER, S.E.
DRAWN BY P. DIAZ
CHECKED BY M. TARAZI
IN CHARGE M. TARAZI
DATE 20130531

REGISTERED PROFESSIONAL ENGINEER WAHAB FUAD TARAZI # S 3185 EXP. 6/30/14 STRUCTURAL STATE OF CALIFORNIA

Skanska Shimmick Herzog
1436 California Circle Milpitas, California 95035
A Joint Venture

MFT Consulting Engineers, Inc. Anil Verma Associates, Inc.
1773 San Pablo Ave., Suite A3 (510) 222-4106
Pinole, CA 94564 Fax (510) 222-6418

Lockwood, Andrews & Newnam, Inc. A LEO A DALY COMPANY
T·Y·LIN INTERNATIONAL

SUBMITTED _____
APPROVED _____

VTA. BART SILICON VALLEY
BART SILICON VALLEY BERRYESSA EXTENSION

LINE, TRACK, STATIONS AND SYSTEMS
DESIGN UNIT 023
MILPITAS STATION
CONCRETE AND STEEL COLUMNS
SCHEDULE AND DETAILS
SHEET 3 OF 6

CADD FILENAME C700-S-DB-S753.dwg
SIZE D | SCALE AS NOTED
CONTRACT NO. C700 | REV. 0
AREA CODE DB | SHEET NO. S753 | PAGE NO. 0255

cad-02 Jul 05, 2013 - 3:37pm P:\BART Berryessa Extension Line\S - STRUCTURAL MILPITAS\WORK_6-10-2012\C700-S-DB-S753.dwg

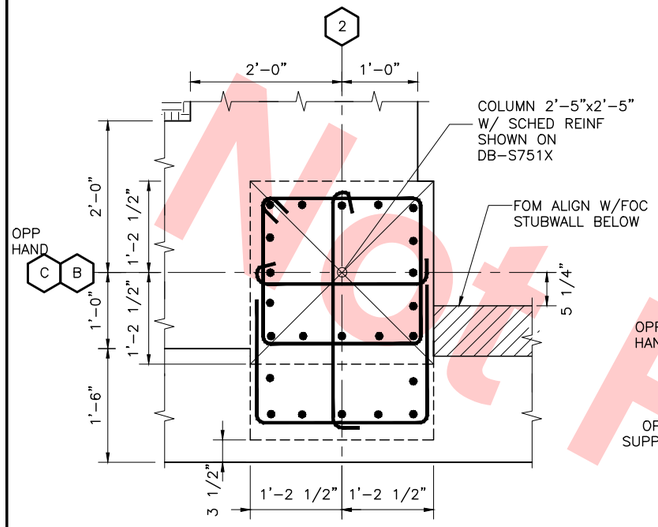

DETAIL @ PLATFORM 1 DB-S754 DB-S111
SCALE: 1"=1'-0"

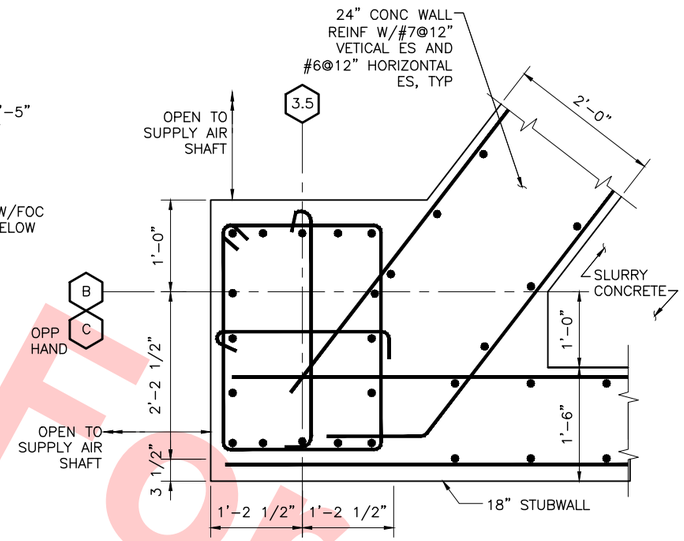

DETAIL @ MAT FOUNDATION 2 DB-S754 DB-S071
SCALE: 1"=1'-0"

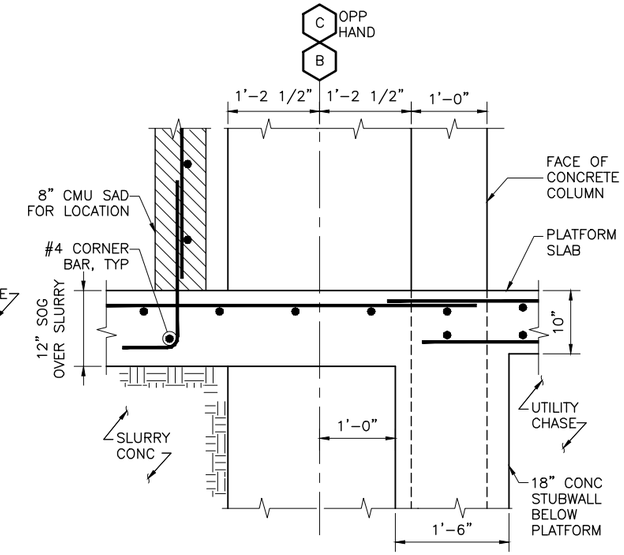

SECTION 3 DB-S754 DB-S753
SCALE: 1"=1'-0"

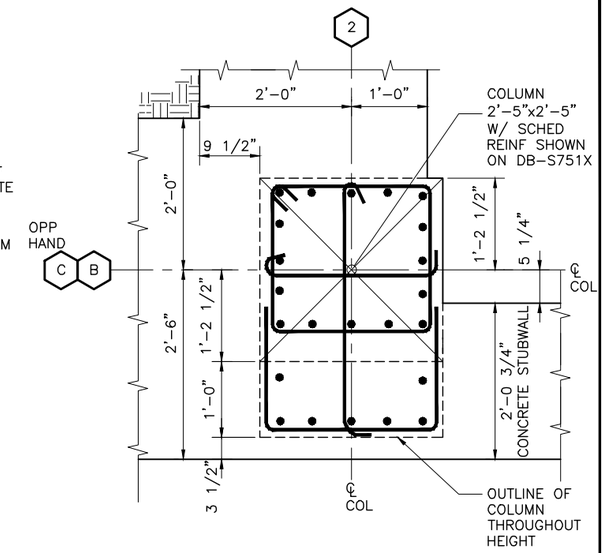

DETAIL @ MAT FOUNDATION 4 DB-S754 DB-S071
SCALE: 1"=1'-0"

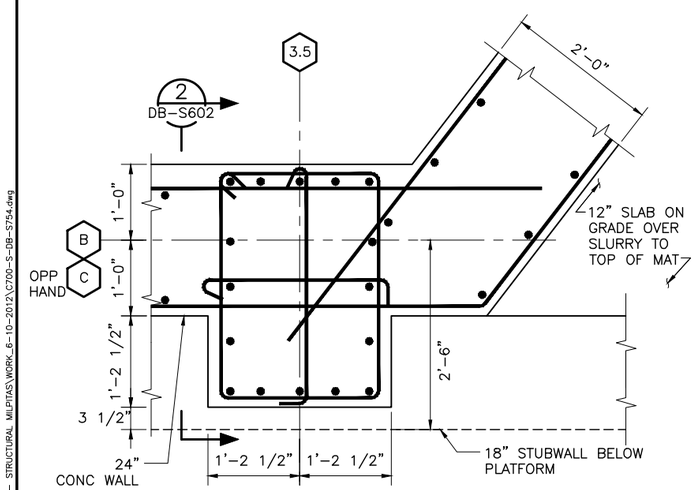

FOR REFERENCE ONLY AND NOT FOR REVIEW. THIS DRAWING WAS ALREADY SUBMITTED UNDER DU23-WP08 RFC TRENCH PACKAGE.

DETAIL @ PLATFORM 5 DB-S754 DB-S111
SCALE: 1"=1'-0"

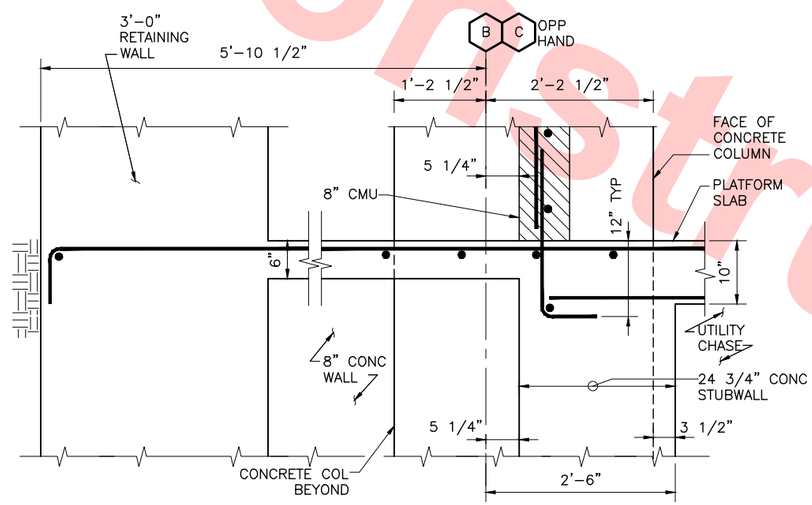

SECTION 6 DB-S754 DB-S753
SCALE: 1"=1'-0"

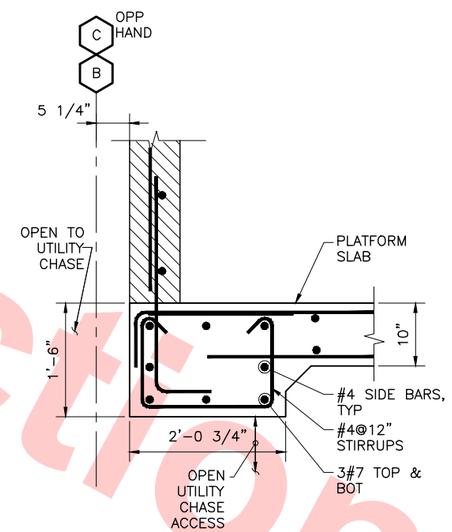

SECTION 7 DB-S754 DB-S753
SCALE: 1"=1'-0"

Not For Construction

REV	DATE	BY	SUB	APP	DESCRIPTION
0	20130531				READINESS FOR CONSTRUCTION

DESIGNED BY J. REBER, S.E.
DRAWN BY P. DIAZ
CHECKED BY M. TARAZI
IN CHARGE M. TARAZI
DATE 20130531

REGISTERED PROFESSIONAL ENGINEER HUMAN FUAD TARAZI # S 3185 EXP. 6/30/14 STRUCTURAL STATE OF CALIFORNIA

Skanska Shimmick Herzog
1436 California Circle
Milpitas, California 95035
A Joint Venture

MFT Consulting Engineers, Inc. Anil Verma Associates, Inc.
1773 San Pablo Ave., Suite A3 (510) 222-4106
Pinole, CA 94564 Fax (510) 222-6418

Lockwood, Andrews & Newnam, Inc. A LEO A DALY COMPANY | T·Y·LIN INTERNATIONAL

SUBMITTED
APPROVED

VTA BART SILICON VALLEY
BART SILICON VALLEY BERRYESSA EXTENSION

LINE, TRACK, STATIONS AND SYSTEMS
DESIGN UNIT 023
MILPITAS STATION
CONCRETE AND STEEL COLUMNS
SCHEDULE AND DETAILS
SHEET 4 OF 6

CADD FILENAME C700-S-DB-S754.dwg
SIZE D | SCALE NONE
CONTRACT NO. C700 | REV. 0
AREA CODE DB | SHEET NO. S754 | PAGE NO. 0256

cad-02 Jul 05, 2013 – 1:57pm P:\BART Berryessa Extension Line\S – STRUCTURAL MILPITAS\WORK_6-10-2012\C700-S-DB-S754.dwg

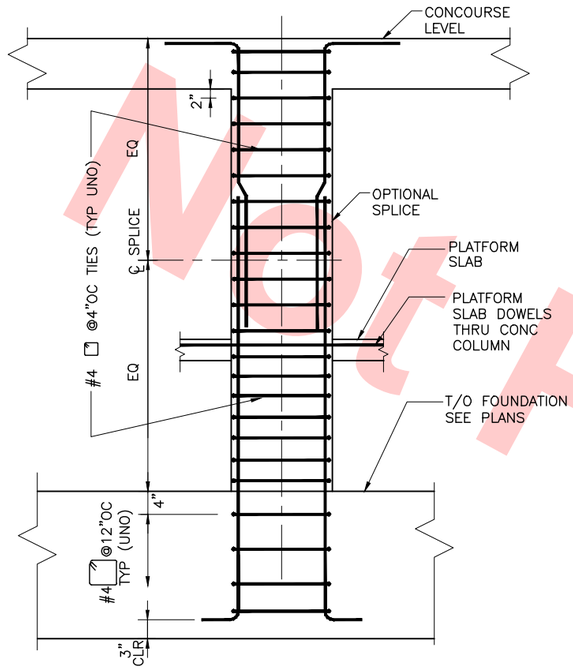

TYPICAL COLUMN (1 / DB-S755) — DB-S751X
SCALE: NTS

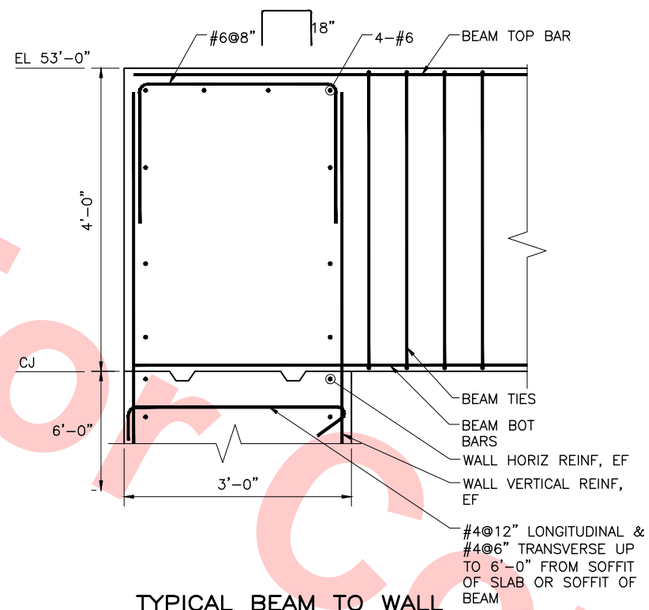

TYPICAL BEAM TO WALL CONNECTION (2 / DB-S755) — DB-S121, DB-S122, DB-S123, DB-S124, DB-S125, DB-S126, DB-S127
SCALE: NTS

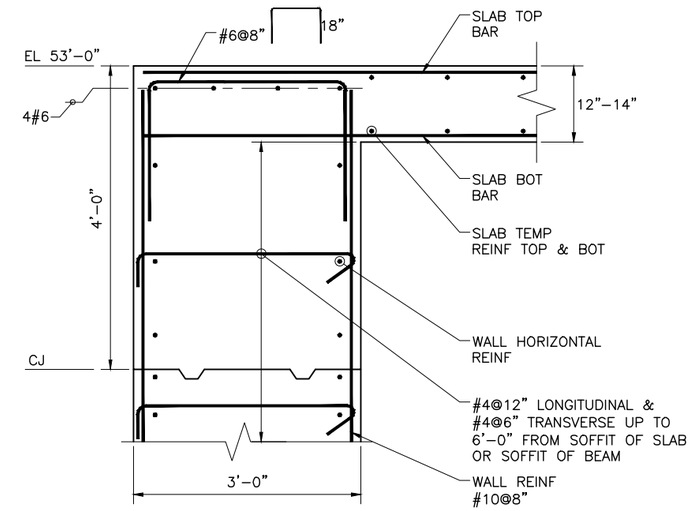

TYPICAL SLAB TO WALL CONNECTION (3 / DB-S755) — DB-S121, DB-S122, DB-S124, DB-S125, DB-S126, DB-S127, DB-S644
SCALE: NTS

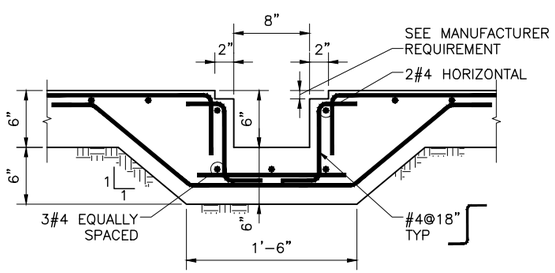

FOR REFERENCE ONLY AND NOT FOR REVIEW. THIS DRAWING WAS ALREADY SUBMITTED UNDER DU23-WP08 RFC TRENCH PACKAGE.

SECTION @ GUTTER (4 / DB-S755) — DB-S212
SCALE: 1 1/2"=1'-0"

Not For Construction

REV	DATE	BY	SUB	APP	DESCRIPTION
0	20130531				READINESS FOR CONSTRUCTION

DESIGNED BY J. REBER, S.E.
DRAWN BY P. DIAZ
CHECKED BY M. TARAZI
IN CHARGE M. TARAZI
DATE 20130531

REGISTERED PROFESSIONAL ENGINEER SOHAIL FUAD TAYEH # S-5185 EXP. 6/30/14 STRUCTURAL STATE OF CALIFORNIA

Skanska Shimmick Herzog
1436 California Circle Milpitas, California 95035
A Joint Venture

MFT Consulting Engineers, Inc. Anil Verma Associates, Inc. 1773 San Pablo Ave., Suite A3 Pinole, CA 94564 (510) 222-4106 Fax (510) 222-4116
SUBMITTED

Lockwood, Andrews & Newnam, Inc. A LEO A DALY COMPANY
T-Y-LIN INTERNATIONAL
APPROVED

VTA BART SILICON VALLEY
BART SILICON VALLEY BERRYESSA EXTENSION

LINE, TRACK, STATIONS AND SYSTEMS DESIGN UNIT 023
MILPITAS STATION
CONCRETE AND STEEL COLUMNS
SCHEDULE AND DETAILS
SHEET 5 OF 6

CADD FILENAME C700-S-DB-S755.dwg
SIZE D | SCALE NONE
CONTRACT NO. C700 | REV. 0
AREA CODE DB | SHEET NO. S755 | PAGE NO. 0257

cad-02 Jul 05, 2013 - 1:57pm P:\BART Berryessa Extension Line\S - STRUCTURAL MILPITAS\WORK_6-10-2012\C700-S-DB-S755.dwg

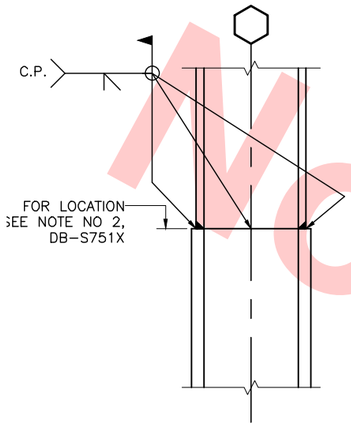

TYPICAL COLUMN SPLICE (1 / DB-S756) DB-S751X
SCALE: 3/4"=1'-0"

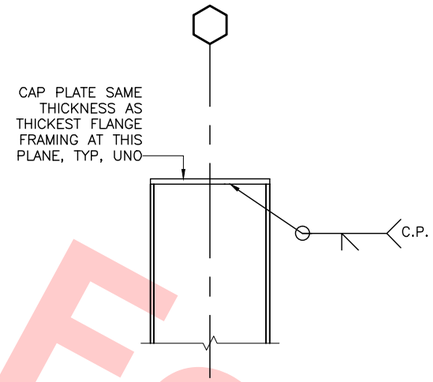

TYPICAL COLUMN CAP PLATE (2 / DB-S756) DB-S751X
SCALE: 3/4"=1'-0"

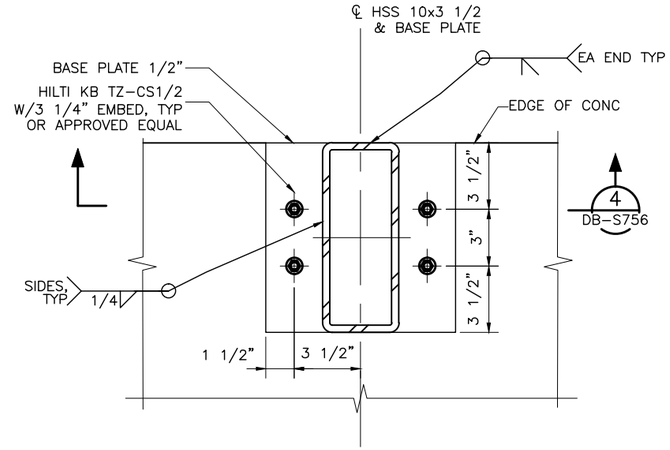

BASE PLATE PLAN DETAIL (3 / DB-S756) DB-S122 DB-S123 DB-S124 DB-S125
SCALE: 3"=1'-0"

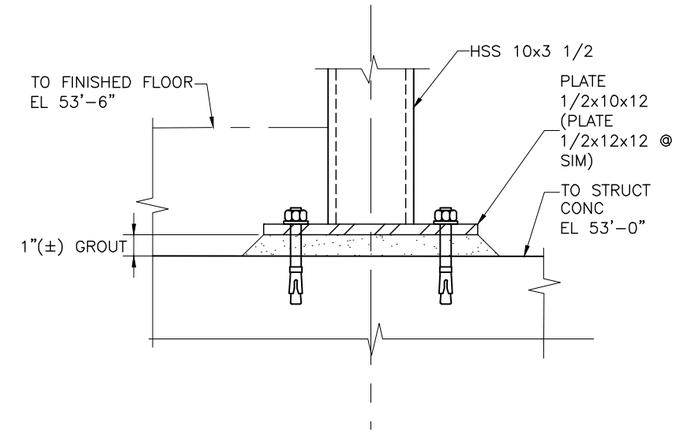

SECTION (4 / DB-S756) DB-S122 DB-S756 DB-S520
SCALE: 3"=1'-0"

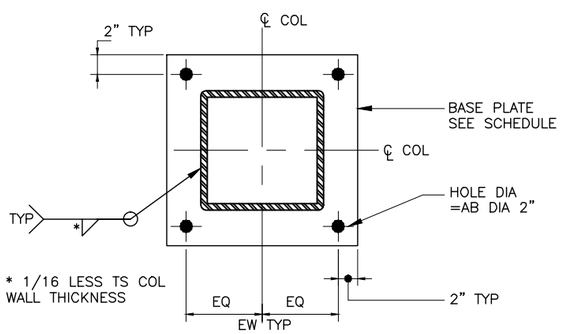

TYPICAL BASE PLATE
FOR HSS COLUMN (5 / DB-S756) DB-S751X
SCALE: 1"=1'-0"

Santa Clara Valley Transportation Authority

____NO EXCEPTIONS TAKEN (NET)
____MAKE CORRECTIONS NOTED (MCN)
____AMEND AND RESUBMIT (A/R)

Any action shown above is subject to the terms of the contract and does not relieve the Contractor of any of its obligations under the contract, including design and detailing.

Contract No.: DB11002F

By: _____ Date: _____

Not For Construction

REV	DATE	BY	SUB	APP	DESCRIPTION
0	20130710				READINESS FOR CONSTRUCTION

DESIGNED BY J. REBER, S.E.
DRAWN BY P. DIAZ
CHECKED BY M. TARAZI
IN CHARGE M. TARAZI
DATE 20130710

REGISTERED PROFESSIONAL ENGINEER SOHAM FUAD VORA # S-3185 EXP. 6/30/14 STRUCTURAL STATE OF CALIFORNIA

Skanska Shimmick Herzog
1436 California Circle
Milpitas, California 95035
A Joint Venture

MFT Consulting Engineers, Inc. Anil Verma Associates, Inc.
1773 San Pablo Ave., Suite A3 (510) 222-4106
Pinole, CA 94564 Fax (510) 222-4118
SUBMITTED

Lockwood, Andrews & Newnam, Inc. A LEO A DALY COMPANY
T·Y·LIN INTERNATIONAL
APPROVED

BART SILICON VALLEY BERRYESSA EXTENSION

LINE, TRACK, STATIONS AND SYSTEMS
DESIGN UNIT 023
MILPITAS STATION
CONCRETE AND STEEL COLUMNS
SCHEDULE AND DETAILS
SHEET 6 OF 6

CADD FILENAME C700-S-DB-S756.dwg
SIZE D | SCALE AS NOTED
CONTRACT NO. C700 | REV. 0
AREA CODE DB | SHEET NO. S756 | PAGE NO. 0258

cad-02 Jul 05, 2013 - 1:57pm P:\BART Berryessa Extension Line\S - STRUCTURAL MILPITAS\WORK_6-10-2012\C700-S-DB-S756.dwg

SLAB SCHEDULE

MARK	DIMENSIONS DEPTH (INCHES)	TYPE	REINFORCING BOTTOM BARS Ⓐ	BOTTOM BARS Ⓑ	TOP BARS Ⓒ	TOP BARS Ⓓ	TOP BARS Ⓔ	REMARKS
S1	10	E	#6@6" OC		#6@6" OC			
S2	10	I	#6@6" OC		#6@6" OC	#6@6" OC		
S3	10	E	#6@6" OC		#6@6" OC			WHERE CONTINUES EAST OF GRID B CONTINUE T AND B REINF AND TERMINATE W/ STANDARD HOOK @ "CONC RETAINING WALL BELOW"
S4	14	E	#6@6" OC		#6@6" OC			
S5	14	I	#6@6" OC		#7@6" OC	#7@6" OC		
S6	14	E	#7@6" OC		#6@6" OC			BTW GRID 3.5 AND 4 CONTINUE T AND B REINF EAST OF GRID B AND TERMINATE W/ STANDARD HOOK @ "CONC WALL BELOW"
S7	14	E	#6@6" OC		#6@6" OC		#6@6" OC	WHERE SLAB CONTINUES PAST CB-18, CONTINUE T AND B REINF AND TERMINATE W/ STANDARD HOOK @ BEAM BEYOND
S8	14	E	#6@6" OC		#6@6" OC			
S9	10	E	#5@6" OC		#5@6" OC		#6@6" OC	
S10	12	E	#6@6" OC		#6@6" OC			
S11	10	E	#5@6" OC		#5@6" OC			WHERE SLAB CONTINUES PAST CB-20, CONTINUE T+B REINF AND TERMINATE W/ STANDARD HOOK @ BEAM BEYOND
S12	12	I	#6@6" OC		#6@6" OC	#6@6" OC		
S13	12	E	#6@6" OC		#6@6" OC			
S14	12	E	#6@6" OC		#6@6" OC			
S15	12	I	#6@6" OC		#6@6" OC			
S16	12	I	#6@6" OC		#6@6" OC			
S17	12	I	#6@6" OC		#6@6" OC	#6@6" OC		
S18	12	E	#6@6" OC		#6@6" OC			
S19	12	E	#6@6" OC		#6@6" OC			
S20	12	I	#6@6" OC		#6@6" OC			
S21	12	I	#6@6" OC		#6@6" OC			
S22	12	I	#6@6" OC		#6@6" OC	#6@6" OC		
S23	12	E	#6@6" OC		#6@6" OC			
S24	12	E	#5@6" OC		#5@6" OC		#5@6" OC	EXTEND "A" AND "E" BARS TO BM SUPPORT BEYOND
S25	12	E	#6@10" OC		#6@10" OC			USE # 4 @ 12" OC LONGITUDINAL TOP & # 7 @ 8" OC LONGITUDINAL BOTTOM IN LIEU OF REINF SPECIFIED IN NOTE 3 ON DB-S762. SEE 1/DB-S763 FOR REINF CONFIG.
S26	12	E	#6@10" OC		#6@10" OC			
S27	12	E	#6@10" OC		#6@10" OC			
S28	12	I	#6@10" OC		#6@10" OC			
S29	12	I	#6@10" OC		#6@10" OC			
S30	12	E	#6@10" OC		#6@10" OC			
S100	10	S	#5@6"o.c.		#5@6"o.c.	#5@6"o.c.		SEE NOTE 2
S600	27	S	#10@6"o.c.		#8@6"o.c.			USE # 8 @ 12" TOP AND BOTTOM IN LIEU OF REINF SPECIFIED IN NOTE 3 ON DB-S762

NOTES:

1. SEE DRAWING DB-S762 FOR REINFORCEMENT LOCATION FOR SLAB TYPES
2. EXTEND BARS MARKED "A" AND "C" INTO CANTILEVER PORTION OF SLAB SIMILAR TO DETAIL 4/DB-S762.

Not For Construction

FOR REFERENCE ONLY AND NOT FOR REVIEW. THIS DRAWING WAS ALREADY SUBMITTED UNDER DU23-WP08 RFC TRENCH PACKAGE.

REV	DATE	BY	SUB	APP	DESCRIPTION
0	20130531				READINESS FOR CONSTRUCTION

DESIGNED BY J. REBER, S.E.
DRAWN BY P. DIAZ
CHECKED BY M. TARAZI
IN CHARGE M. TARAZI
DATE 20130531

REGISTERED PROFESSIONAL ENGINEER MINAH FUAD TARAZI # S 3185 EXP. 6/30/14 STRUCTURAL STATE OF CALIFORNIA

Skanska Shimmick Herzog
1436 California Circle
Milpitas, California 95035
A Joint Venture

MFT Consulting Engineers, Inc. 1773 San Pablo Ave., Suite A3 (510) 222-4106 Pinole, CA 94564 Fax (510) 222-6418
Anil Verma Associates, Inc.
Lockwood, Andrews & Newnam, Inc. A LAN & WALY COMPANY
T·Y·LIN INTERNATIONAL

SUBMITTED _____ APPROVED _____

VTA BART SILICON VALLEY
BART SILICON VALLEY BERRYESSA EXTENSION

LINE, TRACK, STATIONS AND SYSTEMS
DESIGN UNIT 023
MILPITAS STATION
CONCRETE SLAB
SCHEDULE AND DETAILS
SHEET 1 OF 3

CADD FILENAME C700-S-DB-S761.dwg
SIZE D | SCALE NONE
CONTRACT NO. C700 | REV. 0
AREA CODE DB | SHEET NO. S761 | PAGE NO. 0259

cad-02 Jul 05, 2013 – 1:57pm P:\BART Berryessa Extension Line\S – STRUCTURAL, MILPITAS\WORK_6-10-2012\C700-S-DB-S761.dwg

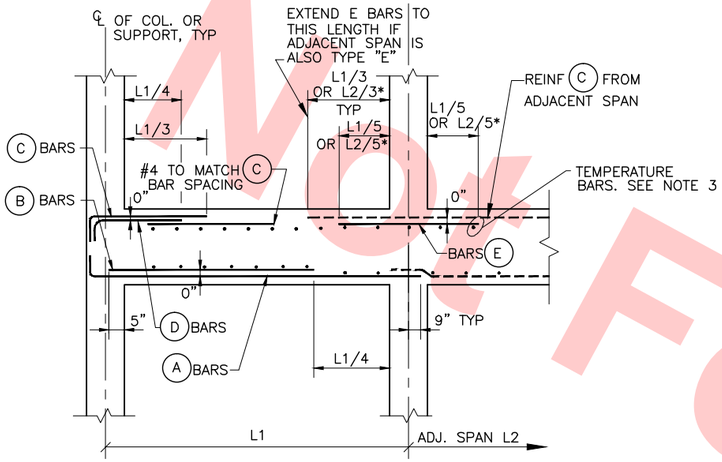

END SPAN (TYPE E) (1) DB-S762 DB-S761
SCALE: NTS *WHICH EVER IS GREATER

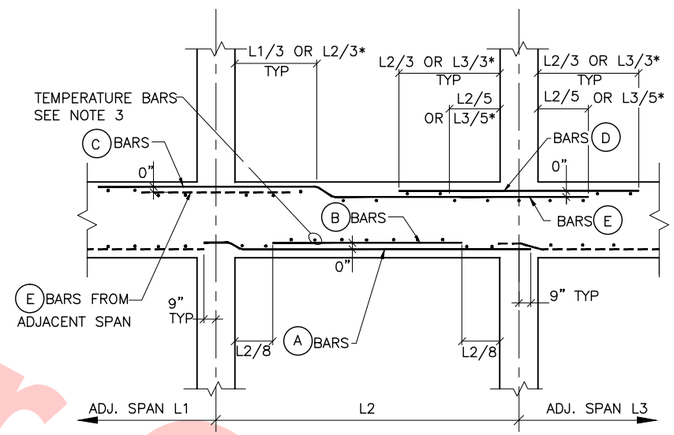

INTERIOR SPAN (TYPE I) (2) DB-S762 DB-S761
SCALE: NTS *WHICH EVER IS GREATER

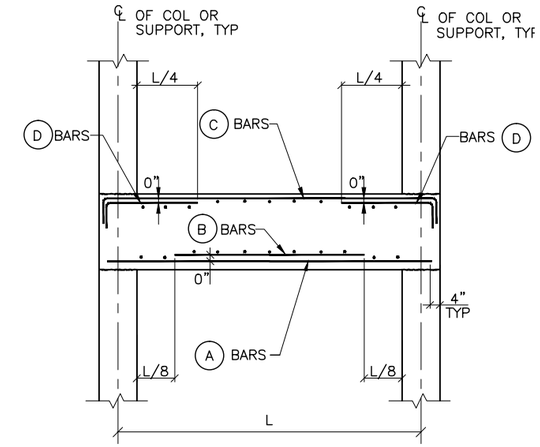

SIMPLE SPAN (TYPE S) (3) DB-S762 DB-S761
SCALE: NTS

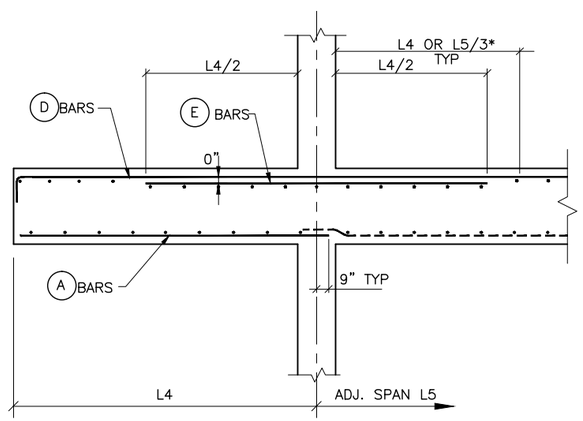

CANTILEVER SPAN (TYPE C) (4) DB-S762 DB-S761
SCALE: NTS *WHICH EVER IS GREATER

NOTES:

1. SLABS ARE MARKED ON THE FRAMING PLANS THUS. ⟵ S1 ⟶ ETC. FOR ONE-WAY SLABS. TO INDICATE THE DIRECTION OF THE MAIN REINFORCING.
2. SEE PLANS FOR SLAB ORIENTATION, END SPAN AND CANTILEVER CONDITIONS MAY BE OPPOSITE HAND WITHOUT SO BEING NOTED.
3. WHERE ONE WAY SLAB ARE SHOWN, UNLESS OTHERWISE NOTED, IN SCHEDULE PROVIDE TEMPERATURE BARS PERPENDICULAR TO SCHEDULE REINFORCEMENT THUS:
   - 6" THICK SLABS – #4 @ 16" OC
   - 8" THICK SLABS – #4 @ 16" OC T&B
   - 10" THICK SLABS – #4 @ 16" OC T&B
   - 12" THICK SLABS – #4 @ 16" OC T&B
   - 14" THICK SLABS – #4 @ 12" OC T&B

SLAB REINFORCEMENT NOTES (6) DB-S762
SCALE: N.T.S.

FOR REFERENCE ONLY AND NOT FOR REVIEW. THIS DRAWING WAS ALREADY SUBMITTED UNDER DU23-WP08 RFC TRENCH PACKAGE.

Not For Construction

REV	DATE	BY	SUB	APP	DESCRIPTION
0	20130531				READINESS FOR CONSTRUCTION

DESIGNED BY J. REBER, S.E.
DRAWN BY P. DIAZ
CHECKED BY M. TARAZI
IN CHARGE M. TARAZI
DATE 20130531

REGISTERED PROFESSIONAL ENGINEER MINAH FUAD TARAZI # S 3185 EXP.6/30/14 STRUCTURAL STATE OF CALIFORNIA

Skanska Shimmick Herzog
1436 California Circle Milpitas, California 95035
A Joint Venture

MFT Consulting Engineers, Inc. 1773 San Pablo Ave., Suite A3 Pinole, CA 94564 (510) 222-4106 Fax (510) 222-6418
Anil Verma Associates, Inc.
Lockwood, Andrews & Newnam, Inc. A LAN & RALY COMPANY
T·Y·LIN INTERNATIONAL

SUBMITTED _____
APPROVED _____

VTA BART SILICON VALLEY
BART SILICON VALLEY BERRYESSA EXTENSION

LINE, TRACK, STATIONS AND SYSTEMS
DESIGN UNIT 023
MILPITAS STATION
CONCRETE SLAB
SCHEDULE AND DETAILS
SHEET 2 OF 3

CADD FILENAME C700-S-DB-S762.dwg
SIZE D | SCALE NONE
CONTRACT NO. C700 | REV. 0
AREA CODE DB | SHEET NO. S762 | PAGE NO. 0260

cad-02 Jul 05, 2013 – 1:57pm P:\BART Berryessa Extension Line\S – STRUCTURAL, MILPITAS\WORK_6-10-2012\C700-S-DB-S762.dwg

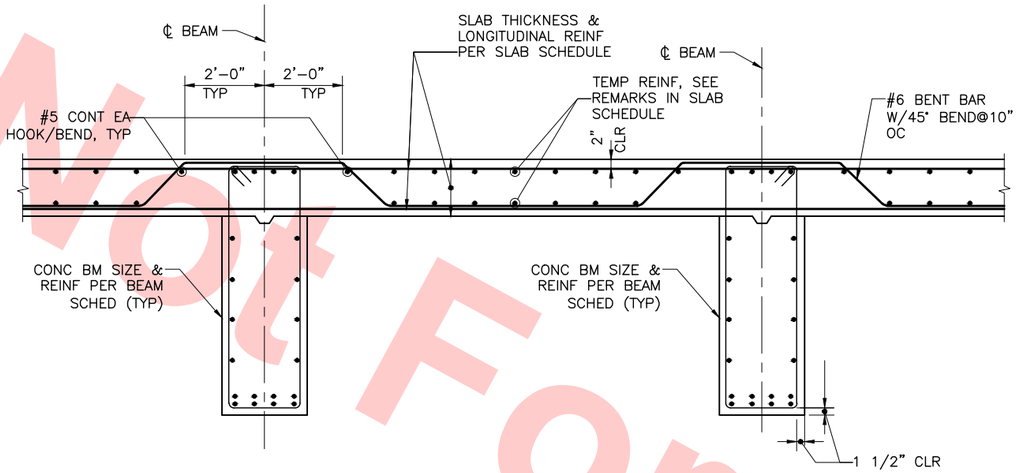

TYPICAL SLAB SHEAR REINF. @ S25 THRU S30 (1 / DB-S763) DB-S643

SCALE: NTS

Not For Construction

FOR REFERENCE ONLY AND NOT FOR REVIEW. THIS DRAWING WAS ALREADY SUBMITTED UNDER DU23-WP08 RFC TRENCH PACKAGE.

REV	DATE	BY	SUB	APP	DESCRIPTION
0	20130531				READINESS FOR CONSTRUCTION

DESIGNED BY J. REBER, S.E.
DRAWN BY P. DIAZ
CHECKED BY M. TARAZI
IN CHARGE M. TARAZI
DATE 20130531

REGISTERED PROFESSIONAL ENGINEER HUMAN FUAD TARAZI # S 3185 EXP. 6/30/14 STRUCTURAL STATE OF CALIFORNIA

Skanska Shimmick Herzog
1436 California Circle
Milpitas, California 95035
A Joint Venture

MFT Consulting Engineers, Inc. Anil Verma Associates, Inc.
1773 San Pablo Ave., Suite A3 (510) 222-4106
Pinole, CA 94564 Fax (510) 222-6418

Lockwood, Andrews & Newnam, Inc. A LEO A DALY COMPANY
T-Y-LIN INTERNATIONAL

SUBMITTED _____ APPROVED _____

VTA BART SILICON VALLEY
BART SILICON VALLEY BERRYESSA EXTENSION

LINE, TRACK, STATIONS AND SYSTEMS
DESIGN UNIT 023
MILPITAS STATION
CONCRETE SLAB
SCHEDULE AND DETAILS
SHEET 3 OF 3

CADD FILENAME C700-S-DB-S763.dwg
SIZE D | SCALE AS NOTED
CONTRACT NO. C700 | REV. 0
AREA CODE DB | SHEET NO. S763 | PAGE NO. 0261

cad-02 Jul 05, 2013 - 1:57pm P:\BART Berryessa Extension Line\S - STRUCTURAL MILPITAS\WORK_6-10-2012\C700-S-DB-S763.dwg

CONCRETE BEAM SCHEDULE CONCOURSE LEVEL

MARK	DIMENSIONS WIDTH	DIMENSIONS DEPTH	TYPE	REINFORCING BOTTOM BARS (A)	REINFORCING BOTTOM BARS (B)	REINFORCING TOP BARS (C)	REINFORCING TOP BARS (D)	REINFORCING TOP BARS (E)	(SEE NOTE 2) SIDE BARS E.F.	STIRRUPS SIZE & TYPE	STIRRUPS SPACING G1	STIRRUPS SPACING G2	STIRRUPS SPACING B	REMARKS
CB1	29	VARIES	S	7#9	4#9	7#9	4#9			4A			16"	ARCH BEAM. SEE B/DB-S768 FOR REINF LOCATION
CB2	29	24	E	5#8		5#8		5#8		4A			10"	"E" BARS OCCUR @ GRID 2.5.
CB3	18	40	E	4#9		4#8		2#8		4A	8@6"		10"	LOCATE "E" BARS IN 2ND LAYER.
CB4	18	40	I	4#8		4#9		2#8		4A	8@6"		10"	LOCATE "E" BARS IN 2ND LAYER.
CB5	18	40	I	4#8		4#9	4#9	2#8		4A	12@6"		10"	LOCATE "E" BARS IN 2ND LAYER.
CB6	18	40	I	4#8			4#9	2#8		4A	12@6"		10"	LOCATE "E" BARS IN 2ND LAYER/EXTEND "A", "D", & "E" BARS PAST GRID 4 TO END OF BEAM & TERMINATE W/STANDARD HOOK. STIRRUPS SOUTH OF GRID 4 TO BE #4, TYPE A @ 6" OC
CB7	29	54	S	6#9	6#9	6#11	6#11			4B	22@6"		12"	LOCATE "B" & "D" BARS IN 2ND LAYER. EXTEND "A", "C", & "D" BARS TO END OF BEAM AT GRIDS A.8 & C.3 & TERMINATE WITH STANDARD HOOK. USE TYPE D STIRRUPS WITH 6" SPACING BETWEEN GRIDS A.8 & B, C.3 & C.
CB8	29	VARIES	S	7#9	7#9	7#9	7#9			4A	14@6"		10"	ARCH BEAM. SEE B/DB-S768 FOR REINF LOCATION
CB9	29	48	S	7#9	7#9	7#10	7#10			4D	12@8"	12@12"	12"	
CB10	29	48												
CB11	29	VARIES												ARCH BEAM. SEE A/DB-S769 FOR REINFORCEMENT SIZE & LOCATION.
CB12	29	48												
CB13	29	VARIES	E	5#8		5#8				4A			16"	ARCH BEAM. SEE A/DB-S774 FOR REINFORCEMENT LOCATION
CB14	29	VARIES	I	5#9			5#9			4A			12"	ARCH BEAM. SEE A/DB-S774 FOR REINFORCEMENT LOCATION
CB15	29	VARIES	I	5#9			6#10	6#10		4A			12"	ARCH BEAM. SEE A/DB-S774 FOR REINFORCEMENT LOCATION. LOCATE "E" BARS IN 2ND LAYER.
CB16	29	VARIES	I	6#14	6#14	6#14	6#14	6#9		5C	16@6"		12"	ARCH BEAM. SEE A/DB-S774 FOR REINFORCEMENT LOCATION. LOCATE "B" AND "E" BARS IN 2ND LAYER. AT G1 AND G2 SPACING USE TYPE C STIRRUPS.
CB17	29	VARIES	E	5#8		6#9				4C			6"	
CB18	22	36	E	5#9	2#9	4#9		2#9		4A			10"	LOCATE "B" & "E" BARS IN 2ND LAYER.
CB19	22	36	I	4#8		4#9	4#9	2#9		4A			10"	LOCATE "E" BARS IN 2ND LAYER.
CB20	22	36	E	5#9	2#9	4#9				4A			10"	LOCATE "B" BARS IN 2ND LAYER.
CB21	24	42	I	5#10	2#10	5#8	5#11	2#11		4A	28@6"		16"	LOCATE "B" & "E" BARS IN 2ND LAYER. EXTEND "A" & "C" BARS PAST GRID 7 TO END OF BEAM & TERMINATE W/STANDARD HOOKS. AT G1 SPACING USE TYPE B STIRRUPS. STIRRUPS NORTH OF GRID 7 TO BE TYPE 4A@12" OC
CB22	24	42	I	5#9	2#9		5#11	2#11		4A	28@6"		16"	LOCATE "B" AND "E" BARS IN 2ND LAYER. AT G1 SPACING USE TYPE B STIRRUPS
CB23	24	42	I	5#10	2#10		5#8			4A	28@6"		16"	LOCATE "B" BARS IN 2ND LAYER. EXTEND "A" AND "D" BARS PAST GRID 10 TO END OF BEAM AND TERMINATE W/STANDARD HOOK. AT G1 SPACING USE TYPE B STIRRUPS. STIRRUPS SOUTH OF GRID 10 TO BE TYPE 4A @ 12" OC
CB24	29	32												
CB25	29	VARIES												ARCH BEAM. SEE B/DB-S768 FOR REINFORCEMENT SIZE & LOCATION.
CB26	29	32												

NOTES:

1. SEE DRAWING DB-S767 FOR REINFORCEMENT LOCATION FOR BEAM TYPES, AND STIRRUP TYPES.
2. SEE 7/DB-S767 FOR SIZE, QUANTITY AND LOCATION OF SIDE BARS.
3. SEE DRAWING DB-S766 FOR CONTINUATION OF CONCRETE BEAM SCHEDULE.

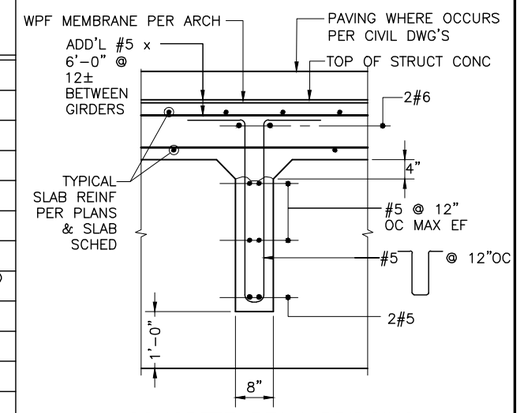

CONCRETE BEAM BRIDGING

SECTION 1 DB-S126
SCALE: 3/4"=1'-0" DB-S765

Not for Construction

FOR REFERENCE ONLY AND NOT FOR REVIEW. THIS DRAWING WAS ALREADY SUBMITTED UNDER DU23-WP08 RFC TRENCH PACKAGE.

REV	DATE	BY	SUB	APP	DESCRIPTION
0	20130531				READINESS FOR CONSTRUCTION

DESIGNED BY J. REBER, S.E.
DRAWN BY P. DIAZ
CHECKED BY M. TARAZI
IN CHARGE M. TARAZI
DATE 20130531

REGISTERED PROFESSIONAL ENGINEER NORMAN FUAD TARAZI # S 3185 EXP. 6/30/14 STRUCTURAL STATE OF CALIFORNIA

Skanska Shimmick Herzog
1436 California Circle
Milpitas, California 95035
A Joint Venture

MFT Consulting Engineers, Inc. Anil Verma Associates, Inc.
1773 San Pablo Ave., Suite A3 (510) 222-4106
Pinole, CA 94564 Fax (510) 222-6418

Lockwood, Andrews & Newnam, Inc. A LAN & WALT COMPANY
T-Y-LIN INTERNATIONAL

SUBMITTED _____
APPROVED _____

VTA BART SILICON VALLEY
BART SILICON VALLEY BERRYESSA EXTENSION

LINE, TRACK, STATIONS AND SYSTEMS
DESIGN UNIT 023
MILPITAS STATION
CONCRETE BEAM/GIRDER
SCHEDULE
SHEET 1 OF 2

CADD FILENAME C700-S-DB-S765.dwg
SIZE D | SCALE AS NOTED
CONTRACT NO. C700 | REV. 0
AREA CODE DB | SHEET NO. S765 | PAGE NO. 0262

cad-02 Jul 05, 2013 - 1:57pm P:\BART Berryessa Extension Line\S - STRUCTURAL MILPITAS\WORK_6-10-2012\C700-S-DB-S765.dwg

CONCRETE BEAM SCHEDULE CONCOURSE LEVEL

MARK	DIMENSIONS WIDTH	DIMENSIONS DEPTH	TYPE	REINFORCING BOTTOM BARS (A)	BOTTOM BARS (B)	TOP BARS (C)	TOP BARS (D)	TOP BARS (E)	(SEE NOTE 2) SIDE BARS E.F.	STIRRUPS SIZE & TYPE	SPACING G1	SPACING G2	SPACING B	REMARKS
CB27	24	38	S	5#8		4#8				4A			12"	
CB28	29	48												
CB29	29	VARIES												ARCH BEAM. SEE A/DB-S770 FOR REINFORCEMENT SIZE AND LOCATION.
CB30	29	48												
CB31	29	48												
CB32	29	VARIES												ARCH BEAM. SEE B/DB-S769 FOR REINFORCEMENT SIZE AND LOCATION.
CB33	29	48												
CB34	24	24	S											HOLD FOR ELEVATOR LOADS
CB35	24	38	S	5#9	2#9	4#8	2#8			4A			12"	EXTENDED "A" & "C" BARS TO FAR END AT BM MARK CB27 & TERMINATE W/ STANDARD HOOK. LOCATE "B" & "D" BARS IN 2ND LAYER.
CB36	29	32												
CB37	29	VARIES												ARCH BEAM. SEE B/DB-S770 FOR REINFORCEMENT SIZE & LOCATION.
CB38	29	32												
CB39	24	36	S	5#8		5#8				4A			12"	
CB40	26	54	E	4#10		4#10				4A			12"	
CB41	26	54	I	7#10	7#10	7#10	7#10	7#10		4C	24@6"		12"	LOCATE "B" & "E" BARS IN 2ND LAYER.
CB42	26	54	E	4#10		4#10				4A			12"	
CB43	26	54	E	4#10		4#10				4A			12"	
CB44	26	54	I	7#10	7#10	7#10	7#10	7#10		4C	24@6"		12"	LOCATE "B" & "E" BARS IN 2ND LAYER.
CB45	26	54	E	4#10		4#10				4A			12"	
CB46	26	54	E	4#10		4#10				4A			12"	
CB47	26	VARIES	I	7#10	4#8	8#10	8#10			4C	33@6"		12"	ARCH BEAM. SEE B/DB-S770. LOCATE "B" & "D" BARS IN SECOND LAYER.
CB48	26	54	E	4#10		4#10				4A			12"	
CB49	26	54	S	9#11	7#10	9#11	7#10			4C	24@6"		12"	
CB50	26	54	S	6#9	2#9	6#9	2#9			4A	14@6"		12"	LOCATE "B" & "E" BARS IN 2ND LAYER.
CB100	18	24	S	3#7		3#7				4A			12"	
CB101	18	38	S	3#7		3#7				4A			12"	
CB51	24	38	S	5#10	2#9	5#9				4A			10"	LOCATE "B" BARS IN 2ND LAYER.
CB52	20	24	S											HOLD FOR ELEVATOR LOADS
CB53	29	48												
CB54	29	VARIES												ARCH BEAM. SEE A/DB-S768 FOR REINFORCEMENT SIZE & LOCATION.
CB55	29	48												

NOTES:

1. SEE DRAWING DB-S767 FOR REINFORCEMENT LOCATION FOR BEAM TYPES, AND STIRRUP TYPES.
2. SEE DWG 7/DB-S767 FOR SIZE, QUANTITY AND LOCATION OF SIDE BARS.

FOR REFERENCE ONLY AND NOT FOR REVIEW. THIS DRAWING WAS ALREADY SUBMITTED UNDER DU23-WP08 RFC TRENCH PACKAGE.

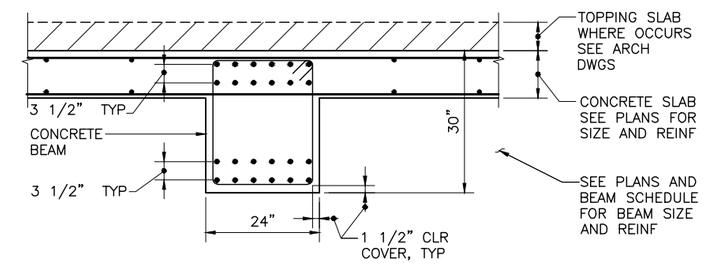

SECTION 1 DB-S766
SLAB TO BEAM CROSS-SECTION
SCALE: 3/4"=1'-0"

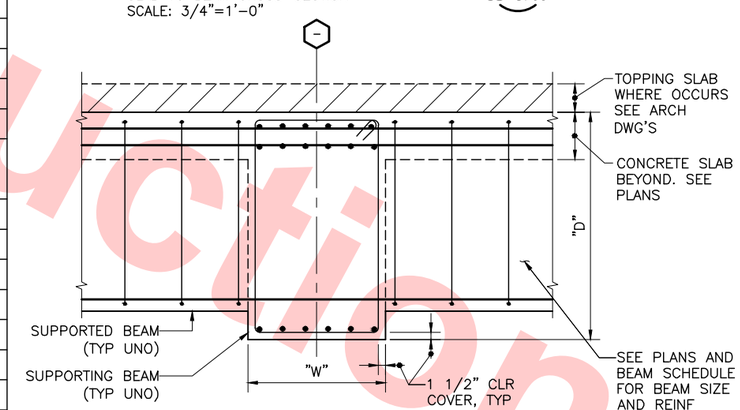

SECTION 2 DB-S766 DB-S641
BEAM TO BEAM CROSS-SECTION
SCALE: 3/4"=1'-0"

Not For Construction

REV	DATE	BY	SUB	APP	DESCRIPTION
0	20130531				READINESS FOR CONSTRUCTION

DESIGNED BY J. REBER, S.E.
DRAWN BY P. DIAZ
CHECKED BY M. TARAZI
IN CHARGE M. TARAZI
DATE 20130531

REGISTERED PROFESSIONAL ENGINEER NOMAN FUAD TARAZI # S 3185 EXP. 6/30/14 STRUCTURAL STATE OF CALIFORNIA

Skanska Shimmick Herzog
1436 California Circle Milpitas, California 95035
A Joint Venture

MFT Consulting Engineers, Inc. Anil Verma Associates, Inc. 1773 San Pablo Ave., Suite A3 (510) 222-4106 Pinole, CA 94564 Fax (510) 222-6418
Lockwood, Andrews & Newnam, Inc. A CH2M HILL COMPANY
T-Y-LIN INTERNATIONAL

SUBMITTED _____
APPROVED _____

VTA. BART SILICON VALLEY
BART SILICON VALLEY BERRYESSA EXTENSION

LINE, TRACK, STATIONS AND SYSTEMS
DESIGN UNIT 023
MILPITAS STATION
CONCRETE BEAM/GIRDER SCHEDULE
SHEET 2 OF 2

CADD FILENAME C700-S-DB-S766.dwg
SIZE D | SCALE AS NOTED
CONTRACT NO. C700 | REV. 0
AREA CODE DB | SHEET NO. S766 | PAGE NO. 0263

cad-02 Jul 05, 2013 - 3:42pm P:\BART Berryessa Extension Line\S - STRUCTURAL MILPITAS\WORK_6-10-2012\C700-S-DB-S766.dwg

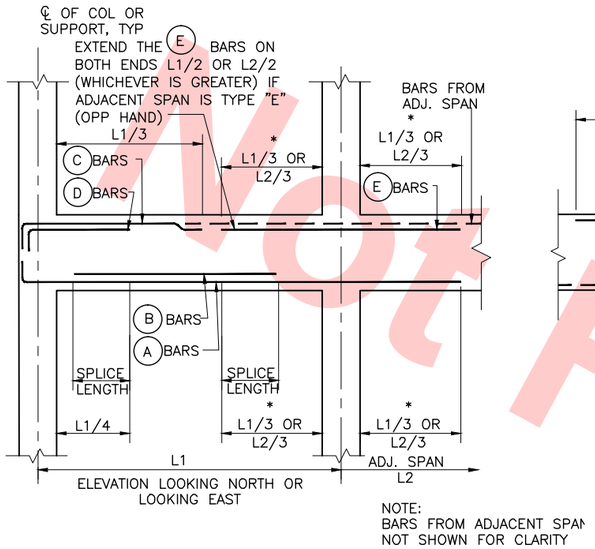

END SPAN (TYPE E) 1 DB-S767
SCALE: NTS

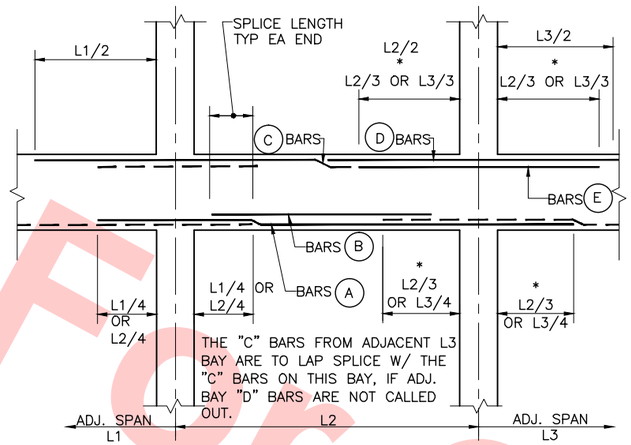

INTERIOR SPAN (TYPE I) 2 DB-S767
SCALE: NTS

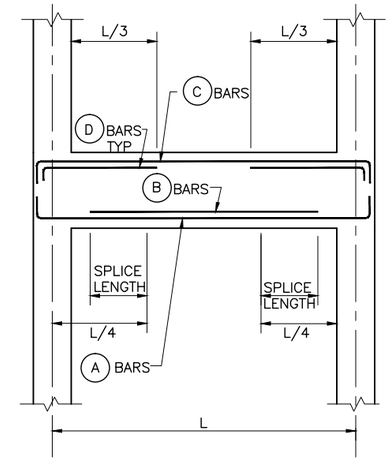

SIMPLE SPAN (TYPE S) 3 DB-S767
SCALE: NTS

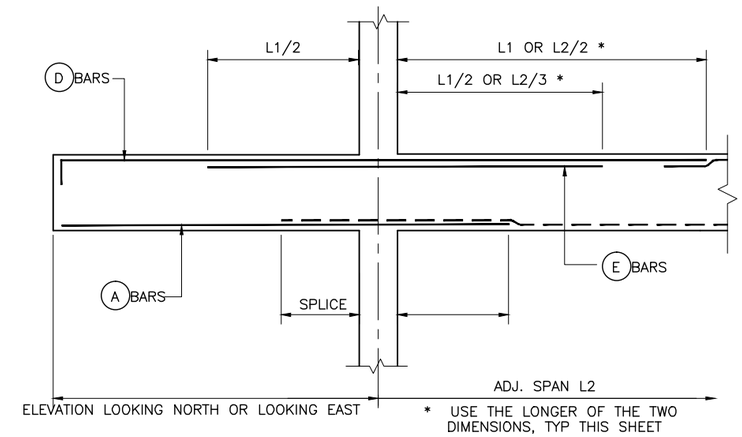

CANTILEVER SPAN (TYPE C) 4 DB-S767
SCALE: NTS

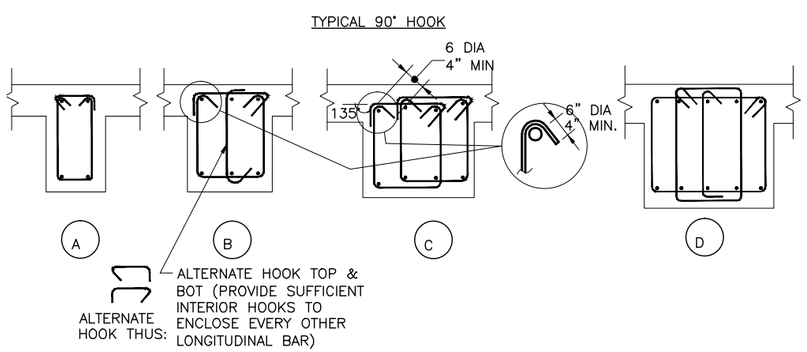

NOTE:
WHERE G1 SPACING IS SPECIFIED PROVIDE THAT SPACING 2" FROM FACE OF SUPPORT

STIRRUP TYPES 5 DB-S767
SCALE: NTS

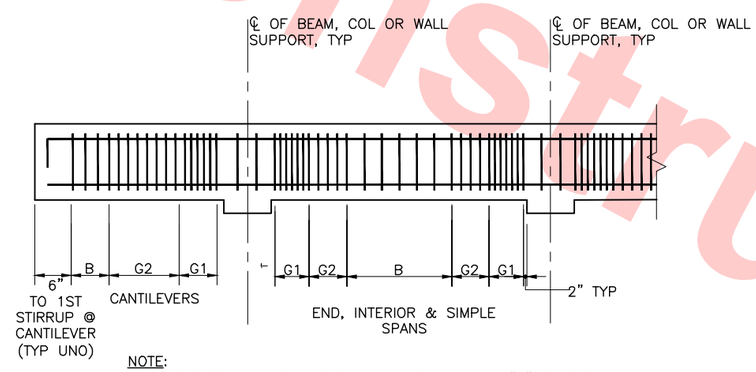

NOTE:
IF G1 OR G2 ARE NOT SPECIFIED, THEM USE USE "B" AS SPACING REQUIREMENTS THROUGHOUT THE SPAN

STIRRUP SPACING LAYOUT 6 DB-S767
SCALE: NTS

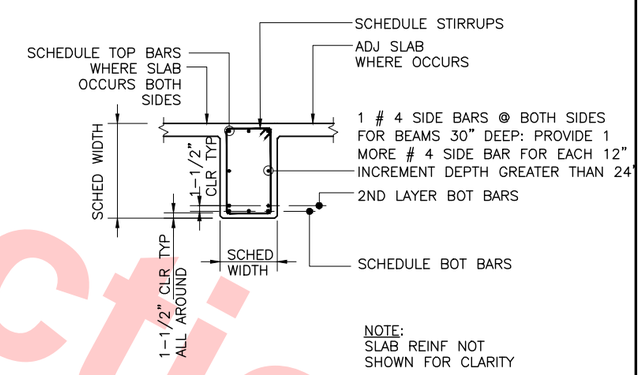

NOTE:
SLAB REINF NOT SHOWN FOR CLARITY

TYPICAL SECTION 7 DB-S767
SCALE: NTS

FOR REFERENCE ONLY AND NOT FOR REVIEW. THIS DRAWING WAS ALREADY SUBMITTED UNDER DU23-WP08 RFC TRENCH PACKAGE.

Not For Construction

REV	DATE	BY	SUB	APP	DESCRIPTION
0	20130710				READINESS FOR CONSTRUCTION

DESIGNED BY J. REBER, S.E.
DRAWN BY P. DIAZ
CHECKED BY M. TARAZI
IN CHARGE M. TARAZI
DATE 20130531

REGISTERED PROFESSIONAL ENGINEER NIMAN FUAD TARAZI # S 3185 EXP. 6/30/14 STRUCTURAL STATE OF CALIFORNIA

Skanska Shimmick Herzog
1436 California Circle
Milpitas, California 95035
A Joint Venture

MFT Consulting Engineers, Inc. Anil Verma Associates, Inc.
1773 San Pablo Ave., Suite A3 (510) 222-4106
Pinole, CA 94564 Fax (510) 222-6418

Lockwood, Andrews & Newnam, Inc. A LEO A DALY COMPANY
T-Y-LIN INTERNATIONAL

SUBMITTED
APPROVED

BART SILICON VALLEY
BART SILICON VALLEY BERRYESSA EXTENSION

LINE, TRACK, STATIONS AND SYSTEMS
DESIGN UNIT 023
MILPITAS STATION
CONCRETE BEAM/GIRDER
DETAILS
SHEET 1 OF 4

CADD FILENAME C700-S-DB-S767.dwg
SIZE D
SCALE NONE
CONTRACT NO. C700
REV. 0
AREA CODE DB
SHEET NO. S767
PAGE NO. 0264

cad-02 Jul 05, 2013 – 1:57pm P:\BART Berryessa Extension Line\S – STRUCTURAL MILPITAS\WORK_6-10-2012\C700-S-DB-S767.dwg

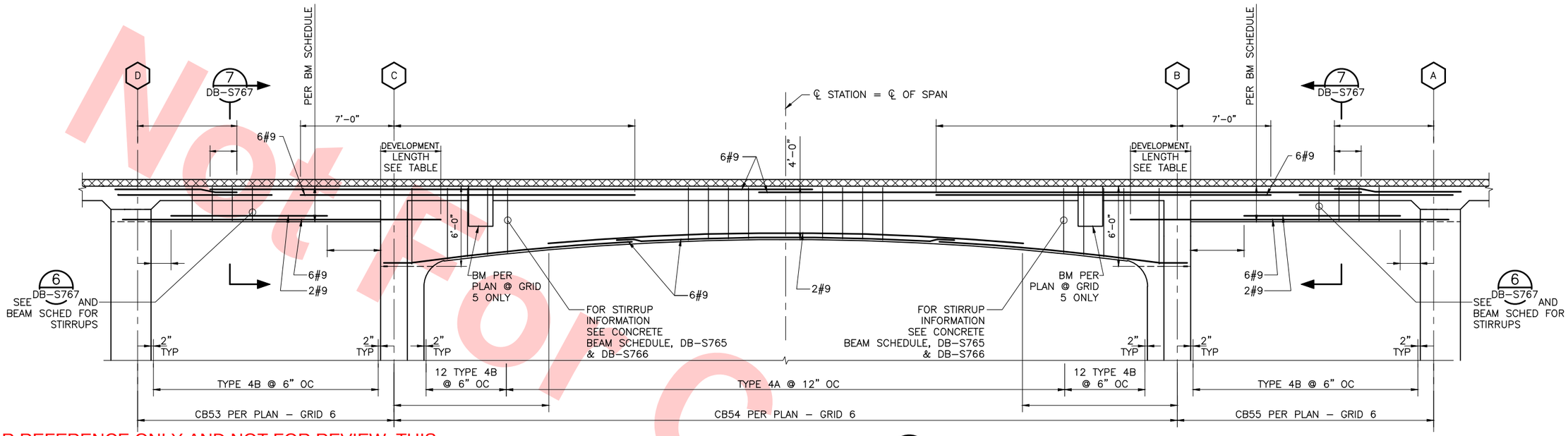

FOR REFERENCE ONLY AND NOT FOR REVIEW. THIS DRAWING WAS ALREADY SUBMITTED UNDER DU23-WP08 RFC TRENCH PACKAGE.

SECTION @ ARCH GRIDER GRID 6 (A DB–S768) DB–S766

CONCRETE GIRDER REINFORCEMENT DIAGRAM
SCALE: 1/4"=1'–0"

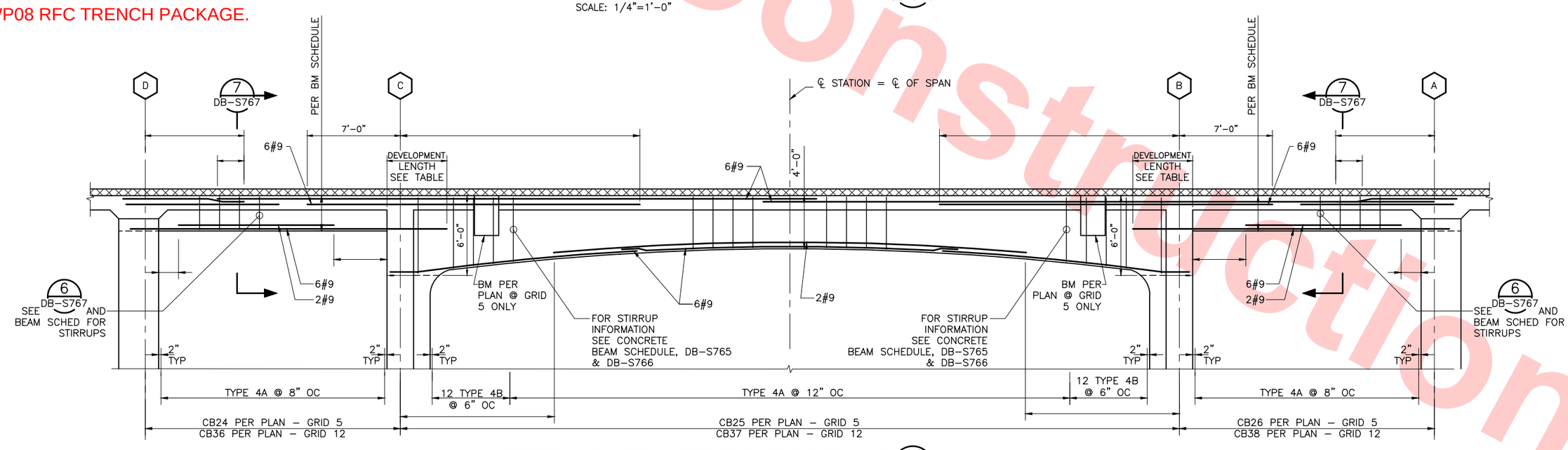

SECTION @ ARCH GIRDERS GRIDS 5 &12 (B DB–S768) DB–S766

CONCRETE GIRDER REINFORCEMENT DIAGRAM
SCALE: 1/4"=1'–0"

Not For Construction

REV	DATE	BY	SUB	APP	DESCRIPTION
0	20130710				READINESS FOR CONSTRUCTION

DESIGNED BY J. REBER, S.E.
DRAWN BY P. DIAZ
CHECKED BY M. TARAZI
IN CHARGE M. TARAZI
DATE 20130710

REGISTERED PROFESSIONAL ENGINEER NOMAN FUAD TARAZI # S 3185 EXP. 6/30/14 STRUCTURAL STATE OF CALIFORNIA

Skanska Shimmick Herzog
1436 California Circle
Milpitas, California 95035
A Joint Venture

MFT Consulting Engineers, Inc. Anil Verma Associates, Inc.
1773 San Pablo Ave., Suite A3 (510) 222-4106
Pinole, CA 94564 Fax (510) 222-6418

Lockwood, Andrews & Newnam, Inc. A CH2M HILL COMPANY | T-Y-LIN INTERNATIONAL

SUBMITTED _____
APPROVED _____

BART SILICON VALLEY
BART SILICON VALLEY BERRYESSA EXTENSION

LINE, TRACK, STATIONS AND SYSTEMS
DESIGN UNIT 023
MILPITAS STATION
CONCRETE BEAM/GIRDER
DETAILS
SHEET 2 OF 4

CADD FILENAME C700–S–DB–S768.dwg
SIZE D | SCALE 1/4" = 1'–0"
CONTRACT NO. C700 | REV. 0
AREA CODE DB | SHEET NO. S768 | PAGE NO. 0265

cad–02 Jul 05, 2013 – 1:57pm P:\BART Berryessa Extension Line\S – STRUCTURAL MILPITAS\WORK_6–10–2012\C700–S–DB–S768.dwg

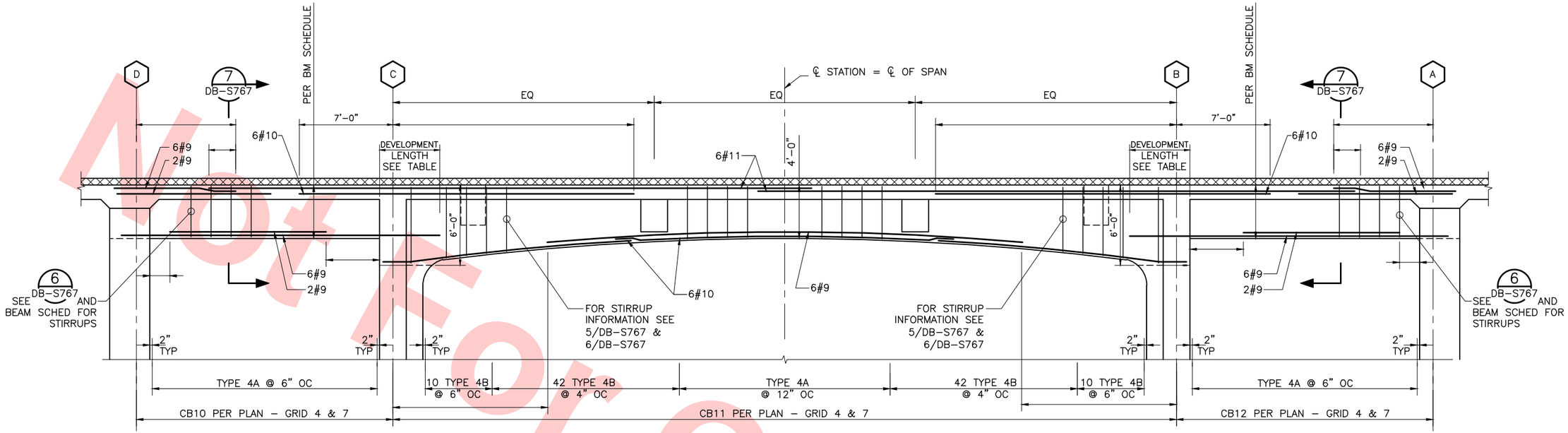

FOR REFERENCE ONLY AND NOT FOR REVIEW. THIS DRAWING WAS ALREADY SUBMITTED UNDER DU23-WP08 RFC TRENCH PACKAGE.

SECTION @ ARCH GIRDERS GRIDS 4 & 7 (A / DB–S769) DB–S765

CONCRETE GIRDER REINFORCEMENT DIAGRAM
SCALE: 1/4"=1'–0"

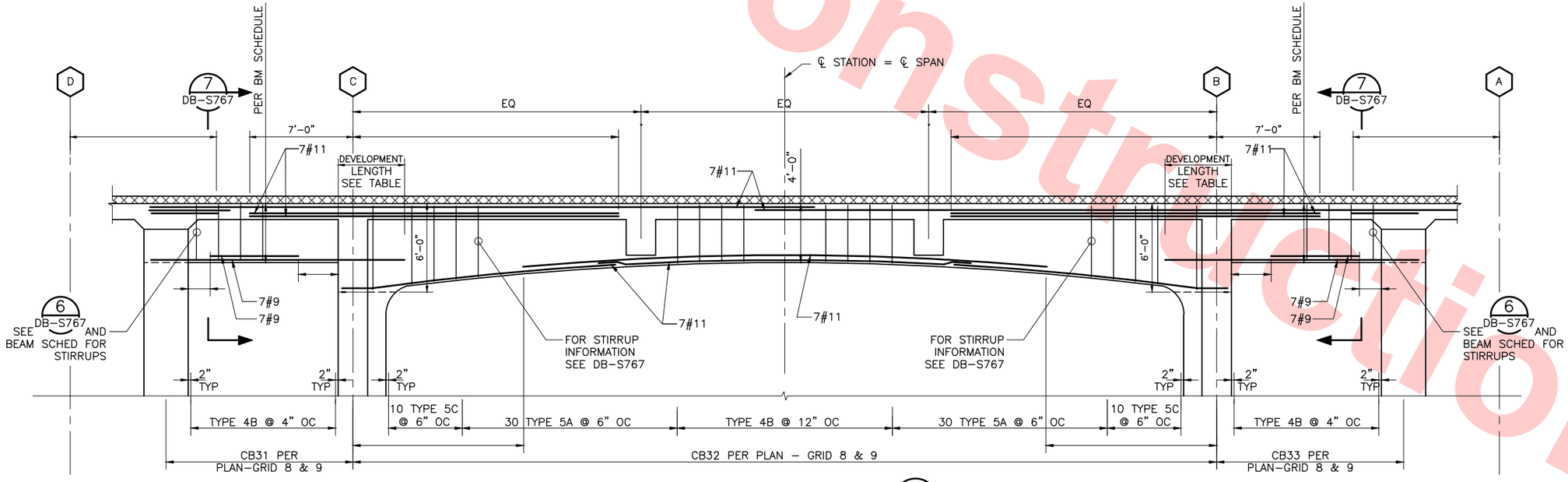

SECTION @ ARCH GIRDERS GRIDS 8 & 9 (B / DB–S769) DB–S766

CONCRETE GIRDER REINFORCEMENT DIAGRAM
SCALE: 1/4"=1'–0"

Not For Construction

REV	DATE	BY	SUB	APP	DESCRIPTION
0	20130710				READINESS FOR CONSTRUCTION

DESIGNED BY J. REBER, S.E.
DRAWN BY P. DIAZ
CHECKED BY M. TARAZI
IN CHARGE M. TARAZI
DATE 20130710

REGISTERED PROFESSIONAL ENGINEER HUMAN FUAD TARAZI # S 3185 EXP. 6/30/14 STRUCTURAL STATE OF CALIFORNIA

Skanska Shimmick Herzog
1436 California Circle
Milpitas, California 95035
A Joint Venture

MFT Consulting Engineers, Inc. Anil Verma Associates, Inc.
1773 San Pablo Ave., Suite A3 (510) 222-4106
Pinole, CA 94564 Fax (510) 222-6418

Lockwood, Andrews & Newnam, Inc. A LNA & BALY COMPANY | T·Y·LIN INTERNATIONAL

SUBMITTED _____ APPROVED _____

BART SILICON VALLEY
BART SILICON VALLEY BERRYESSA EXTENSION

LINE, TRACK, STATIONS AND SYSTEMS
DESIGN UNIT 023
MILPITAS STATION
CONCRETE BEAM/GIRDER
DETAILS
SHEET 3 OF 4

CADD FILENAME C700–S–DB–S769.dwg
SIZE D | SCALE 1/4" = 1'–0"
CONTRACT NO. C700 | REV. 0
AREA CODE DB | SHEET NO. S769 | PAGE NO. 0266

cad–02 Jul 05, 2013 – 1:57pm P:\BART Berryessa Extension Line\S – STRUCTURAL MILPITAS\WORK_6–10–2012\C700–S–DB–S769.dwg

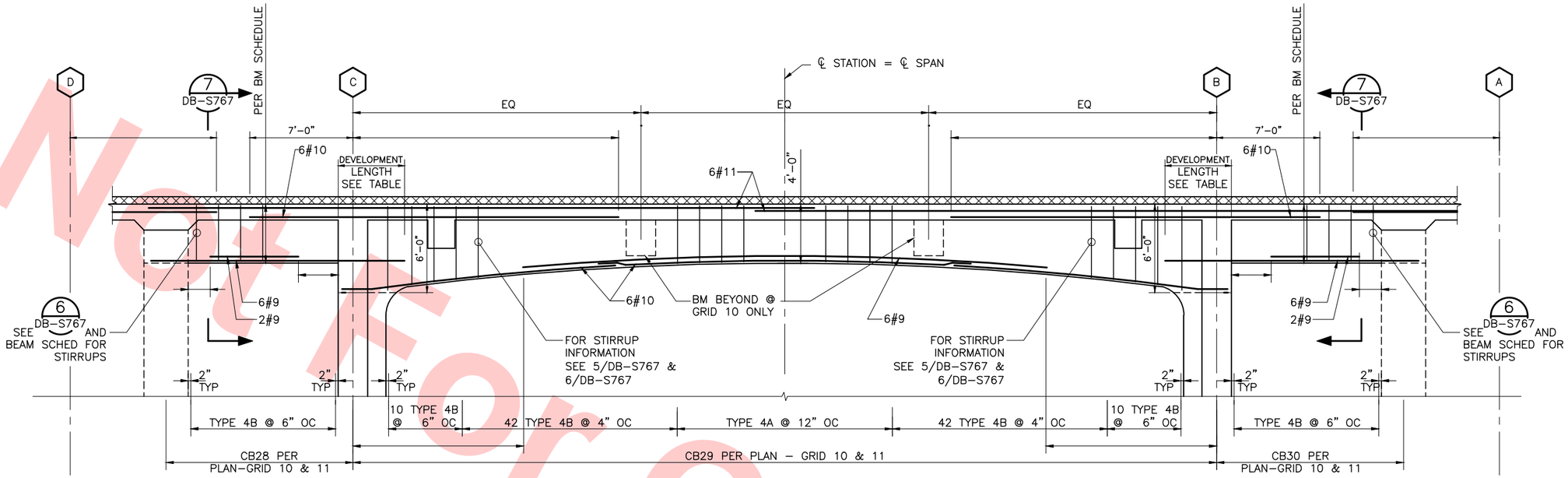

SECTION @ ARCH GIRDERS GRIDS 10 & 11 (A / DB-S770) DB-S766

CONCRETE GIRDER REINFORCEMENT DIAGRAM
SCALE: 1/4"=1'-0"

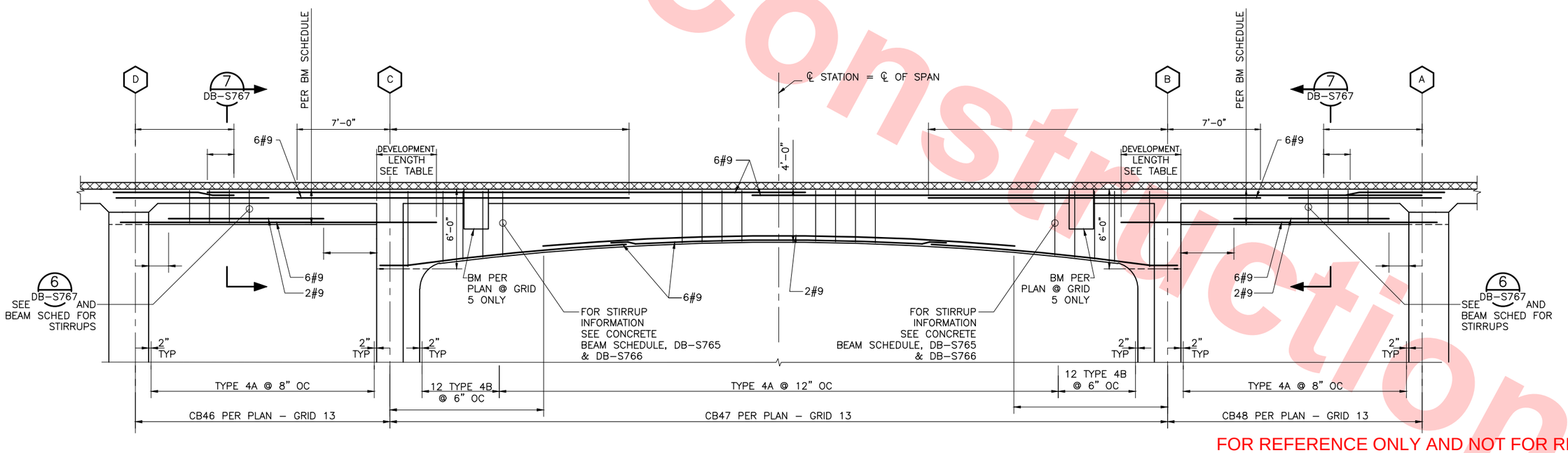

SECTION @ ARCH GIRDER GRIDS 13 (B / DB-S770) DB-S766

CONCRETE GIRDER REINFORCEMENT DIAGRAM
SCALE: 1/4"=1'-0"

Not For Construction

FOR REFERENCE ONLY AND NOT FOR REVIEW. THIS DRAWING WAS ALREADY SUBMITTED UNDER DU23-WP08 RFC TRENCH PACKAGE.

REV	DATE	BY	SUB	APP	DESCRIPTION
0	20130710				READINESS FOR CONSTRUCTION

DESIGNED BY J. REBER, S.E.
DRAWN BY P. DIAZ
CHECKED BY M. TARAZI
IN CHARGE M. TARAZI
DATE 20130710

REGISTERED PROFESSIONAL ENGINEER — MINAH FUAD TARAZI — # S 3185 — EXP. 6/30/14 — STRUCTURAL — STATE OF CALIFORNIA

Skanska Shimmick Herzog
1436 California Circle
Milpitas, California 95035
A Joint Venture

MFT Consulting Engineers, Inc. — Anil Verma Associates, Inc.
1773 San Pablo Ave., Suite A3 (510) 222-4106
Pinole, CA 94564 Fax (510) 222-6418

Lockwood, Andrews & Newnam, Inc. — A LINA A BALY COMPANY — T·Y·LIN INTERNATIONAL

SUBMITTED _____ APPROVED _____

VTA BART SILICON VALLEY
BART SILICON VALLEY BERRYESSA EXTENSION

LINE, TRACK, STATIONS AND SYSTEMS
DESIGN UNIT 024
MILPITAS STATION
CONCRETE BEAM/GIRDER
DETAILS
SHEET 4 OF 4

CADD FILENAME C700-S-DB-S770.dwg
SIZE D | SCALE 1/4" = 1'-0"
CONTRACT NO. C700 | REV. 0
AREA CODE DB | SHEET NO. S770 | PAGE NO. 0267

cad-02 Jul 05, 2013 – 1:57pm P:\BART Berryessa Extension Line\S – STRUCTURAL MILPITAS\WORK_6-10-2012\C700-S-DB-S770.dwg

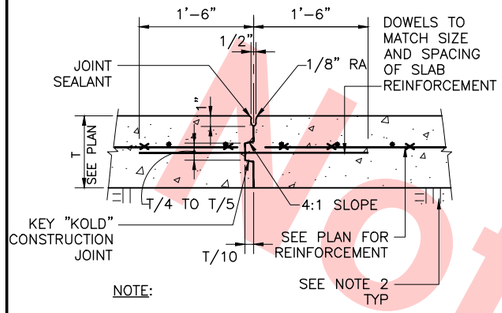

NOTE:

1. CONSTRUCTION JOINTS SHALL BE LOCATED AT 40'-0" CENTER TO CENTER EACH WAY
2. SEE GEOTECHNICAL REPORT FOR SUBGRADE REQUIREMENTS

SLAB ON GRADE CONSTRUCTION JOINT (1 / DB-S771)

SCALE: NTS

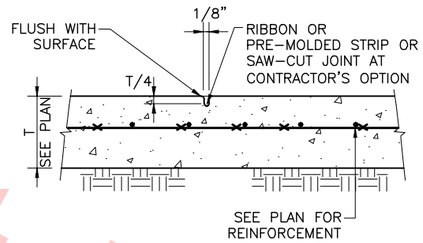

NOTE:

1. CONTROL JOINTS SHALL BE LOCATED AT 10'-0" CENTER TO CENTER EACH WAY AND SHALL BE LOCATED BETWEEN CONSTRUCTION JOINTS.

SLAB ON GRADE CONTROL JOINT (2 / DB-S771)

SCALE: NTS

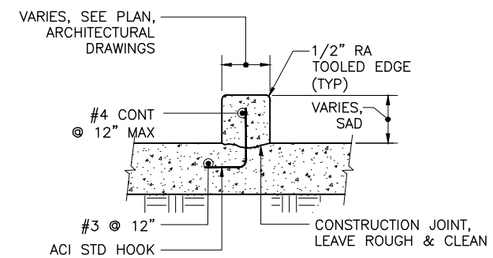

NOTE:

1. AT CONTRACTOR'S OPTION, #3 DOWELS MAY BE EPOXY GROUTED INTO SLAB, DEPTH=2/3 OF SLAB THICKNESS.

CLEAN DIRT, OIL, FORM RELEASE AGENT, ETC., OUT OF FORM TIE HOLE. FILL WITH NON-SHRINK GROUT

CONCRETE CURB (3 / DB-S771)

SCALE: NTS

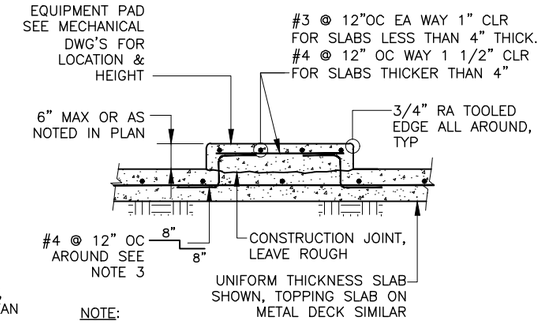

NOTE:

1. PAD SIZE SHALL BE MINIMUM AS NOTED ON THE PLANS OR AS INDICATED BY THE EQUIPMENT MFR. AND APPROVED BY THE ENGINEER.
2. EQUIPMENT BASES SHALL BE INSTALLED LEVEL UNLESS SPECIFIED OTHERWISE.
3. AT CONTRACTOR'S OPINION, #4 DOWELS MAY EPOXY GROUTED INTO THE SLAB (DEPTH=2/3 OF SLAB THICKNESS OR TOPPING SLAB THICKNESS) AT DECK FLUTE.

EQUIPMENT PAD (4 / DB-S771)

SCALE: NTS

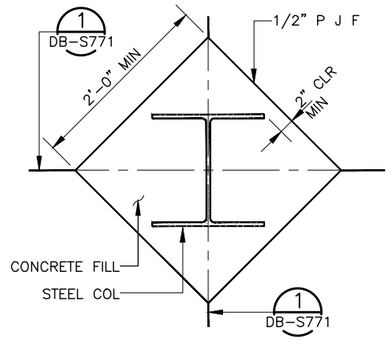

NOTE:

HOLD PJF 1/2" BELOW TOC @ JOINTS REQUIREMENTS SEALANT

ISOLATION JONT @ COLUMN (5 / DB-S771)

SCALE: NTS

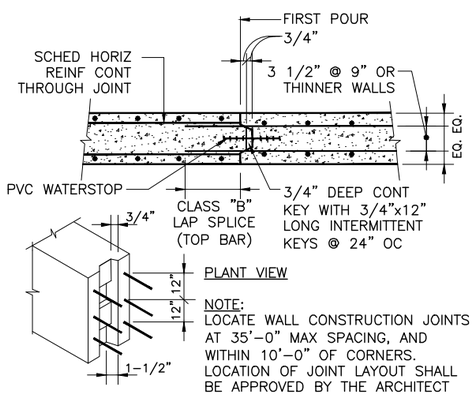

NOTE:
LOCATE WALL CONSTRUCTION JOINTS AT 35'-0" MAX SPACING, AND WITHIN 10'-0" OF CORNERS. LOCATION OF JOINT LAYOUT SHALL BE APPROVED BY THE ARCHITECT

TYPICAL VERTICAL CONSTRUCTION JOINT IN CONCRETE WALL (MAT FOUNDATION SIM) (6 / DB-S771)

SCALE: NTS

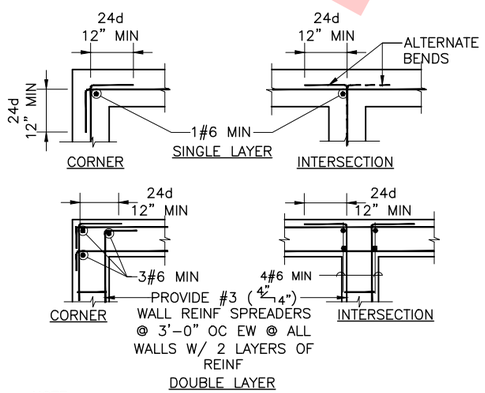

NOTE:
1. SEE OTHER DETAILS & NOTES FOR SIZE & SPACING OF REINF
2. LAP & HOOK FTG BARS AT CORNERS & INTERSECTIONS SAME AS FOR WALLS, EXCEPT THAT ADDED VERTICALS AT CORNERS ARE NOT REQUIRED

TYPICAL DETAILS OF CONCRETE WALLS REINFORCEMENT (7 / DB-S771)

SCALE: NTS

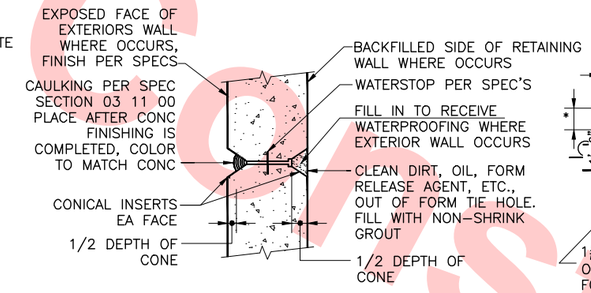

NOTE:
1. THE SPACING OF FORM TIES ON EXPOSED PORTIONS OF WALLS SHALL BE PROXIMATELY EQUAL HORIZONTALLY & VERTICALLY & SHALL BE UNIFORM IN EACH DIRECTION
2. WHERE CAULKING IS NOT SPECIFIED OR SHOWN, CLEAN FORM TIE HOLES AS NOTED FOR NON-SHRINK GROUT AND DRY PACK WITH PATCHING MORTAR PER SPECS WITH COLOR MORTAR TO MATCH COLOR OF CONCRETE.
3. DRY PACK METHOD SHALL BE AS SPECIFIED USING STEEL TOOLS.

FORM SNAP-TIE HOLE (8 / DB-S771)

SCALE: NTS

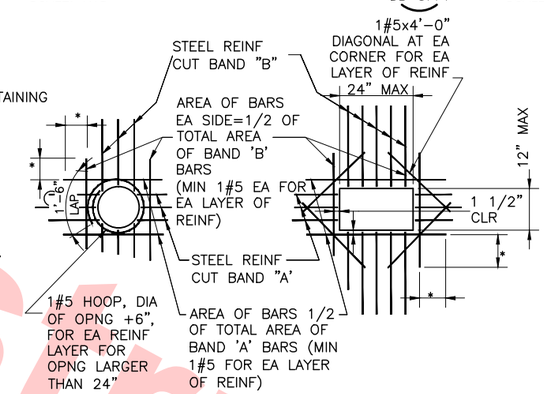

NOTE:
1. TYPICAL FOR ALL OPENINGS IN CONCRETE WALLS, SLABS AND FOOTINGS UNLESS INDICATED OTHERWISE ON PLANS
2. DO NOT WELD REINFORCEMENT TO PIPE SLEEVES AND INSERTS
3. OPENING SLEEVES AND FORMS PER SPECIFICATIONS
4. * DIMENSION IS ACI CLASS 'B' SPLICE LENGTH FOR LARGEST BAR SIZE USED. 2'-0" MINIMUM
5. REINFORCEMENT SHOWN FOR ROUND OPENING IS FOR 24"ø OR LARGER. FOR OPENING LESS THAN 24"ø PROVIDE REINFORCEMENT SIMILAR TO OPENINGS WITH CORNERS AS SHOWN

OPENING REINFORCEMENT (9 / DB-S771)

SCALE: NTS

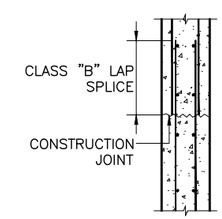

NOTE:
1. JOINT SURFACE SHALL BE CLEAN AND FREE OF LAITANCE AND ROUGHENED TO EXPOSE AGGREGATE TO FULL 1/4" AMPLITUDE
2. JOINT OF WALL TO FOOTING AND JOINT OF CONC SLAB TO WALL ARE SIMILAR

TYPICAL HORIZONTAL CONSTRUCTION JOINT IN CONCRETE WALL (10 / DB-S771)

SCALE: NTS

FOR REFERENCE ONLY AND NOT FOR REVIEW. THIS DRAWING WAS ALREADY SUBMITTED UNDER DU23-WP08 RFC TRENCH PACKAGE.

Not For Construction

REV	DATE	BY	SUB	APP	DESCRIPTION
0	20130531				READINESS FOR CONSTRUCTION

DESIGNED BY J. REBER, S.E.
DRAWN BY P. DIAZ
CHECKED BY M. TARAZI
IN CHARGE M. TARAZI
DATE 20130531

REGISTERED PROFESSIONAL ENGINEER NOMAN FUAD TARAZI # S 3185 EXP. 6/30/14 STRUCTURAL STATE OF CALIFORNIA

Skanska Shimmick Herzog
1436 California Circle
Milpitas, California 95035
A Joint Venture

MFT Consulting Engineers, Inc. Anil Verma Associates, Inc.
1773 San Pablo Ave., Suite A3 (510) 222-4106
Pinole, CA 94564 Fax (510) 222-6418

Lockwood, Andrews & Newnam, Inc. A LAN & MAY COMPANY | T-Y-LIN INTERNATIONAL

SUBMITTED _____ APPROVED _____

VTA. BART SILICON VALLEY
BART SILICON VALLEY BERRYESSA EXTENSION

LINE, TRACK, STATIONS AND SYSTEMS
DESIGN UNIT 023
MILPITAS STATION
TYPICAL CONCRETE SECTIONS AND DETAILS
SHEET 1 OF 3

CADD FILENAME C700-S-DB-S771.dwg
SIZE D | SCALE NONE
CONTRACT NO. C700 | REV. 0
AREA CODE DB | SHEET NO. S771 | PAGE NO. 0268

cad-02 Jul 05, 2013 - 1:57pm P:\BART Berryessa Extension Line\S - STRUCTURAL MILPITAS\WORK_6-10-2012\C700-S-DB-S771.dwg

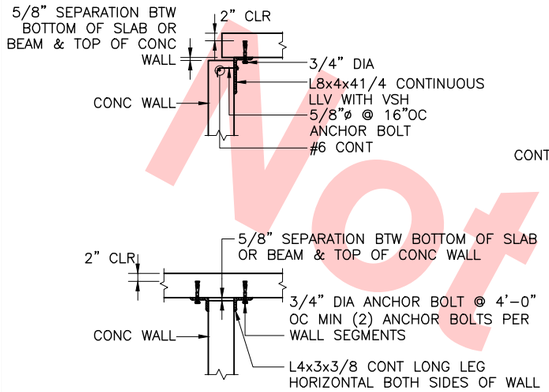

TYPICAL TOP OF CONCRETE WALL WITH SEPARATION JOINTS (1 / DB-S772)

SCALE: NTS

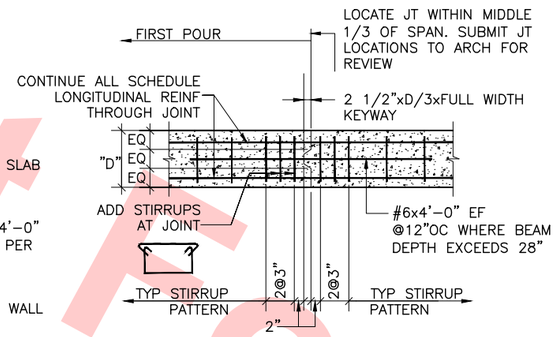

TYPICAL CONSTRUCTION JOINT IN CONCRETE BEAM OR GRADE BEAM OR CONT. FOOTING (2 / DB-S772)

SCALE: NTS

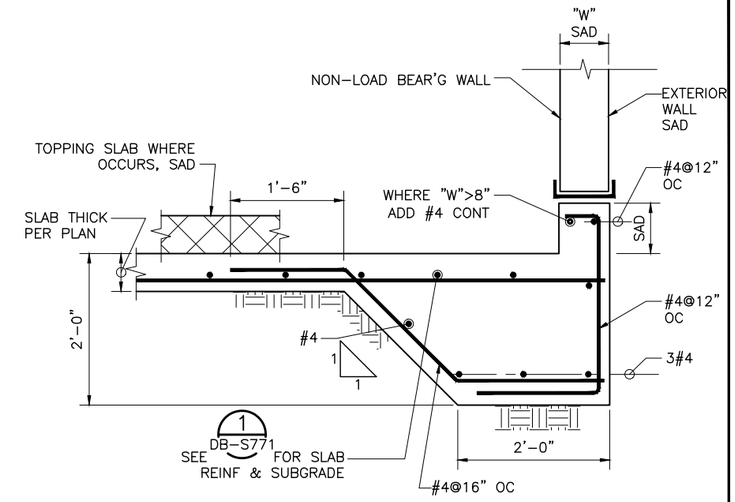

SLAB ON GRADE @ EDGE (4 / DB-S772) DB-S121

SCALE: 3/4" = 1'-0"

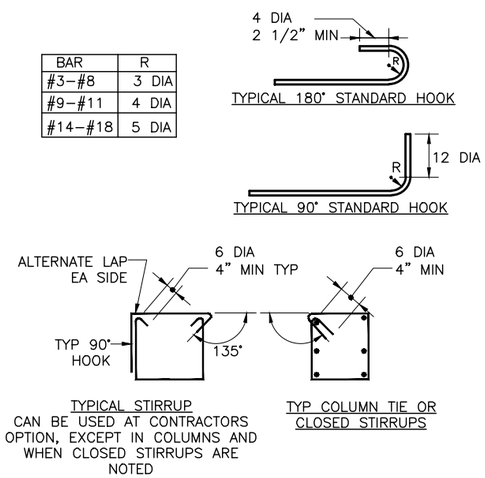

BAR	R
#3–#8	3 DIA
#9–#11	4 DIA
#14–#18	5 DIA

TYP. REINFORCMENT BAR HOOKS BENDS, STIRRUPS AND TIES (6 / DB-S772)

SCALE: NTS

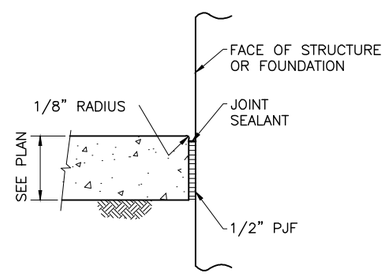

SLAB ON GRADE EXPANSION (7 / DB-S772)

SCALE: NTS

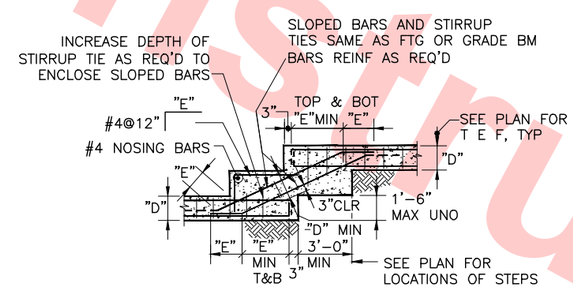

NOTE: "E" = DEVELOPMENT LENGTH l_d HOOK, AS REQ'D TO PROVIDE SPEC'S EMBEDMENT

TYP. STEPPED FTG. OR GRADE BEAM (8 / DB-S772)

SCALE: NTS

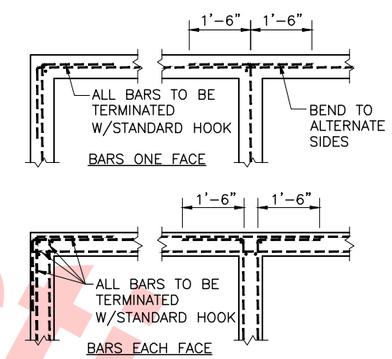

NOTE:
TYPICAL FOOTING BARS RUN CONTINUOUS WITH LAPS PER THE GENERAL NOTES. PROVIDE ADDITIONAL BARS AT STEP-DOWN CONDITIONS

CONC. FOOTING AND WALL (9 / DB-S772)

SCALE: NTS

Not For Construction

FOR REFERENCE ONLY AND NOT FOR REVIEW. THIS DRAWING WAS ALREADY SUBMITTED UNDER DU23-WP08 RFC TRENCH PACKAGE.

REV	DATE	BY	SUB	APP	DESCRIPTION
0	20130531				READINESS FOR CONSTRUCTION

DESIGNED BY J. REBER, S.E.
DRAWN BY P. DIAZ
CHECKED BY M. TARAZI
IN CHARGE M. TARAZI
DATE 20130531

REGISTERED PROFESSIONAL ENGINEER NUMAN FUAD TARAZI # S 3185 EXP. 6/30/14 STRUCTURAL STATE OF CALIFORNIA

Skanska Shimmick Herzog
1436 California Circle Milpitas, California 95035
A Joint Venture

MFT Consulting Engineers, Inc. Anil Verma Associates, Inc.
1773 San Pablo Ave., Suite A3 (510) 222-4106
Pinole, CA 94564 Fax (510) 222-6418

Leslewood, Andrews & Newnam, Inc. A LAN & BALL COMPANY
T-Y-LIN INTERNATIONAL

SUBMITTED
APPROVED

BART SILICON VALLEY
BART SILICON VALLEY BERRYESSA EXTENSION

LINE, TRACK, STATIONS AND SYSTEMS
DESIGN UNIT 023
MILPITAS STATION
TYPICAL CONCRETE SECTIONS AND DETAILS
SHEET 2 OF 3

CADD FILENAME C700-S-DB-S772.dwg
SIZE D | SCALE AS NOTED
CONTRACT NO. C700 | REV. 0
AREA CODE DB | SHEET NO. S772 | PAGE NO. 0269

cad-02 Jul 05, 2013 – 1:57pm P:\BART Berryessa Extension Line\S – STRUCTURAL MILPITAS\WORK_6-10-2012\C700-S-DB-S772.dwg

DEVELOPMENT LENGTH ld AND SPLICE LENGTH FOR GRADE 60, UNCOATED IN NORMAL WEIGHT CONCRETE									
	f'c PSI	DEVELOPMENT LENGTH				SPLICE LENGTH			
		No 6 AND SMALLER BARS AND DEFORMED WIRES		No 7 AND LARGER BARS		No 6 AND SMALLER BARS		No 7 AND LARGER BARS	
		TOP	BOT.	TOP	BOT.	TOP	BOT.	TOP	BOT.
CASE 1	3,000	$58d_b$	$44d_b$	$72d_b$	$55d_b$	$75d_b$	$58d_b$	$93d_b$	$72d_b$
	4,000	$50d_b$	$38d_b$	$62d_b$	$47d_b$	$65d_b$	$50d_b$	$80d_b$	$62d_b$
	5,000	$45d_b$	$34d_b$	$55d_b$	$42d_b$	$58d_b$	$45d_b$	$71d_b$	$55d_b$
	6,000	$41d_b$	$31d_b$	$51d_b$	$39d_b$	$53d_b$	$41d_b$	$66d_b$	$51d_b$
	8,000	$36d_b$	$27d_b$	$45d_b$	$34d_b$	$46d_b$	$36d_b$	$58d_b$	$45d_b$
	10,000	$32d_b$	$24d_b$	$39d_b$	$30d_b$	$41d_b$	$32d_b$	$51d_b$	$39d_b$
CASE 2	3,000	$86d_b$	$66d_b$	$106d_b$	$82d_b$	$112d_b$	$86d_b$	$139d_b$	$107d_b$
	4,000	$75d_b$	$57d_b$	$93d_b$	$71d_b$	$97d_b$	$75d_b$	$120d_b$	$93d_b$
	5,000	$66d_b$	$51d_b$	$83d_b$	$64d_b$	$86d_b$	$66d_b$	$108d_b$	$83d_b$
	6,000	$60d_b$	$46d_b$	$76d_b$	$58d_b$	$78d_b$	$60d_b$	$98d_b$	$76d_b$
	8,000	$52d_b$	$40d_b$	$65d_b$	$50d_b$	$68d_b$	$52d_b$	$85d_b$	$65d_b$
	10,000	$47d_b$	$36d_b$	$59d_b$	$45d_b$	$61d_b$	$47d_b$	$76d_b$	$59d_b$

DEVELOPMENT LENGTH ld AND SPLICE LENGTH FOR GRADE 60, EPOXY COATED BARS IN NORMAL WEIGHT CONCRETE									
	f'c PSI	DEVELOPMENT LENGTH				SPLICE LENGTH			
		No 6 AND SMALLER BARS		No 7 AND LARGER BARS		No 6 AND SMALLER BARS		No 7 AND LARGER BARS	
		TOP	BOT.	TOP	BOT.	TOP	BOT.	TOP	BOT.
CASE 1	4,000	$61d_b$	$54d_b$	$77d_b$	$68d_b$	$80d_b$	$71d_b$	$101d_b$	$89d_b$
CASE 2	4,500	$92d_b$	$81d_b$	$115d_b$	$88d_b$	$120d_b$	$106d_b$	$150d_b$	$115d_b$

NOTES:

1. AT WALLS, COLUMNS, BEAMS, AND SLABS, USE EMBEDMENT SHOWN ABOVE FOR ALL UNCOATED BARS IN NORMAL WEIGHT CONCRETE WITH CLEAR SPACING BETWEEN BARS GREATER THAN OR EQUAL TO 4 BAR DIAMETERS.
2. TOP BARS ARE HORIZONTAL BARS WITH 12" OR MORE OF CONCRETE CAST BELOW THEM.
3. CASE 1

   CONCRETE COVER NOT LESS THAN d_b,
   & CLEAR SPACING NOT LESS THAN $2d_b$

   OR

   CONCRETE COVER NOT LESS THAN d_b AND
   CLEAR SPACING OF BARS NOT LESS THAN d_b &
   WITH STIRRUPS OR TIES THROUGHOUT l_d NOT
   LESS THAN THE CODE MINIMUM.
4. CASE 2

   WHEN BAR SPACING AND COVER DO NOT
   MEET CASE 1 REQUIREMENTS
5. SEE CBC 2010 FOR OTHER CONDITIONS

TYPICAL REINFORCEMENT BAR DEVELOPMENT LENGTH AND SPLICES (1)

SCALE: NTS — DB-S773

DEVELOPMENT LENGTH l_{dh} (INCHES) OF STANDARD HOOKS FOR UNCOATED GRADE 60 BARS						
BAR SIZE #	f'c (NORMAL WEIGHT CONCRETE), PSI					
	3,000	4,000	5,000	6,000	8,000	10,000
3	9	8	7	6	6	5
4	12	10	9	8	7	7
5	14	12	11	10	9	8
6	17	15	13	12	11	9
7	20	17	15	14	12	11
8	22	20	18	16	14	12
9	25	22	20	18	16	14
10	28	25	22	20	18	16
11	31	27	24	22	19	17
14	38	33	29	27	23	21
18	50	43	39	35	31	28

DEVELOPMENT LENGTH l_{dh} (INCHES) OF STANDARD HOOKS FOR EPOXY COATED GRADE 60 BARS						
BAR SIZE #	f'c (NORMAL WEIGHT CONCRETE), PSI					
	4,500					
3	11					
4	14					
5	17					
6	21					
7	24					
8	27					
9	31					
10	35					
11	38					
14	46					
18	61					

TYPICAL REINFORCEMENT BAR DEVELOPMENT LENGTH FOR STANDARD HOOKS (2)

SCALE: NTS — DB-S773

DEVELOPMENT LENGTH l_{dt} (INCHES) OF HEADED DEFORMED BARS FOR UNCOATED 60 BARS				
BAR SIZE #	f'c (NORMAL WEIGHT CONCRETE), PSI			
	3,000	4,000	5,000	6,000 OR LARGER
3	7	6	6	5
4	9	8	7	7
5	11	10	9	8
6	14	12	11	10
7	16	14	12	11
8	18	16	14	13
9	20	18	16	15
10	23	20	18	16
11	25	22	20	18

TYPICAL REINFORCEMENT BAR DEVELOPMENT LENGTH FOR HEADED STUDS (3)

SCALE: NTS — DB-S773

CONCRETE WALL REINFORCEMENT SCHEDULE			
WALL THICKNESS	# OF LAYERS	VERTICAL REINFORCEMENT @ EACH LAYER	HORIZONTAL REINFORCEMENT @ EACH LAYER
24"	2	#7@12"	#8@12"
18"	2	#6@12"	#7@12"
12"	2	#5@12"	#6@12"
10"	2	#5@12"	#5@12"
8"	1	#5@12"	#7@12"
6"	1	#5@12"	#7@12"

TYPICAL CONCRETE WALL REINFORCEMENT SCHEDULE (4)

SCALE: NTS — DB-S773

Santa Clara Valley Transportation Authority

___NO EXCEPTIONS TAKEN (NET)
___MAKE CORRECTIONS NOTED (MCN)
___AMEND AND RESUBMIT (A/R)

Any action shown above is subject to the terms of the contract and does not relieve the Contractor of any of its obligations under the contract, including design and detailing.

Contract No.: DB11002F

By: _____ Date: _____

Not For Construction

REV	DATE	BY	SUB	APP	DESCRIPTION
0	20130710				READINESS FOR CONSTRUCTION
0	20130531				READINESS FOR CONSTRUCTION

DESIGNED BY J. REBER, S.E.
DRAWN BY P. DIAZ
CHECKED BY M. TARAZI
IN CHARGE M. TARAZI
DATE 20130531

REGISTERED PROFESSIONAL ENGINEER — SOHAIL FUAD TARAZI — S-3185 EXP. 6/30/14 — STRUCTURAL — STATE OF CALIFORNIA

Skanska Shimmick Herzog — 1436 California Circle, Milpitas, California 95035 — A Joint Venture

MFT Consulting Engineers, Inc. — 1773 San Pablo Ave., Suite A3, Pinole, CA 94564 — (510) 222-4106, Fax (510) 222-4616 — Anil Verma Associates, Inc.

SUBMITTED

Lockwood, Andrews & Newnam, Inc. — A LAN & BALT COMPANY — T-Y-LIN INTERNATIONAL

APPROVED

VTA BART SILICON VALLEY — BART SILICON VALLEY BERRYESSA EXTENSION

LINE, TRACK, STATIONS AND SYSTEMS DESIGN UNIT 023
MILPITAS STATION
TYPICAL CONCRETE
SECTIONS AND DETAILS
SHEET 3 OF 3

CADD FILENAME C700-S-DB-S773.dwg
SIZE D — SCALE NONE
CONTRACT NO. C700 — REV. 0
AREA CODE DB — SHEET NO. S773 — PAGE NO. 0270

cad-02 Jul 05, 2013 - 1:57pm P:\BART Berryessa Extension Line\S - STRUCTURAL MILPITAS\WORK_6-10-2012\C700-S-DB-S773.dwg

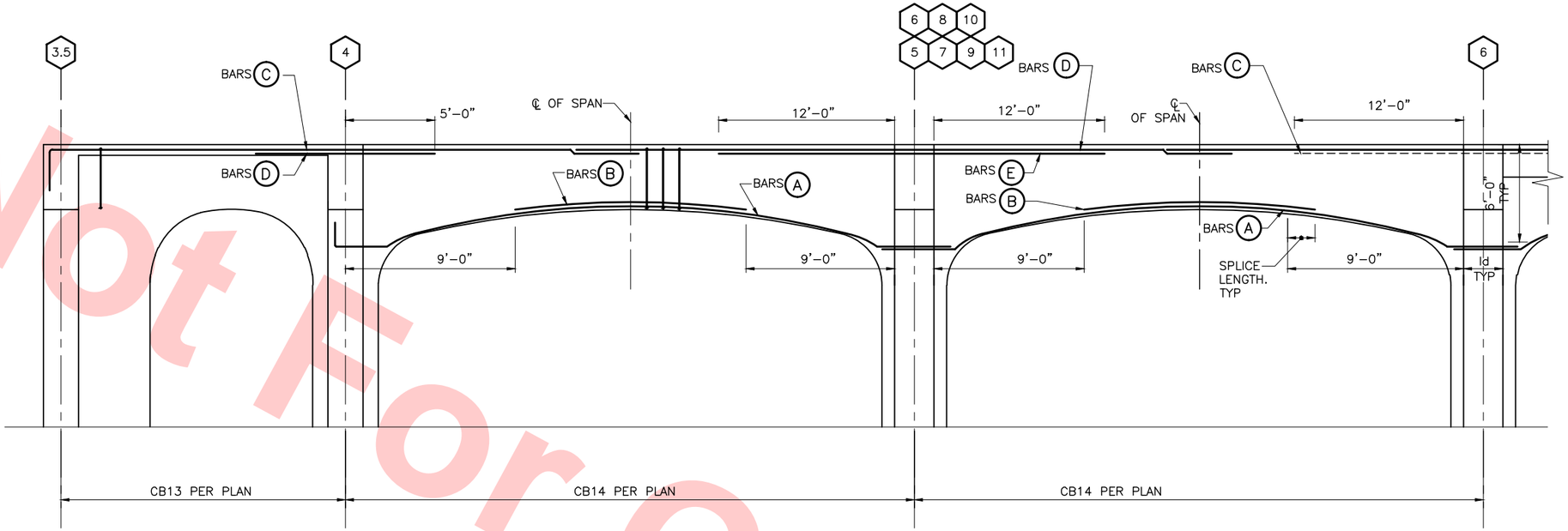

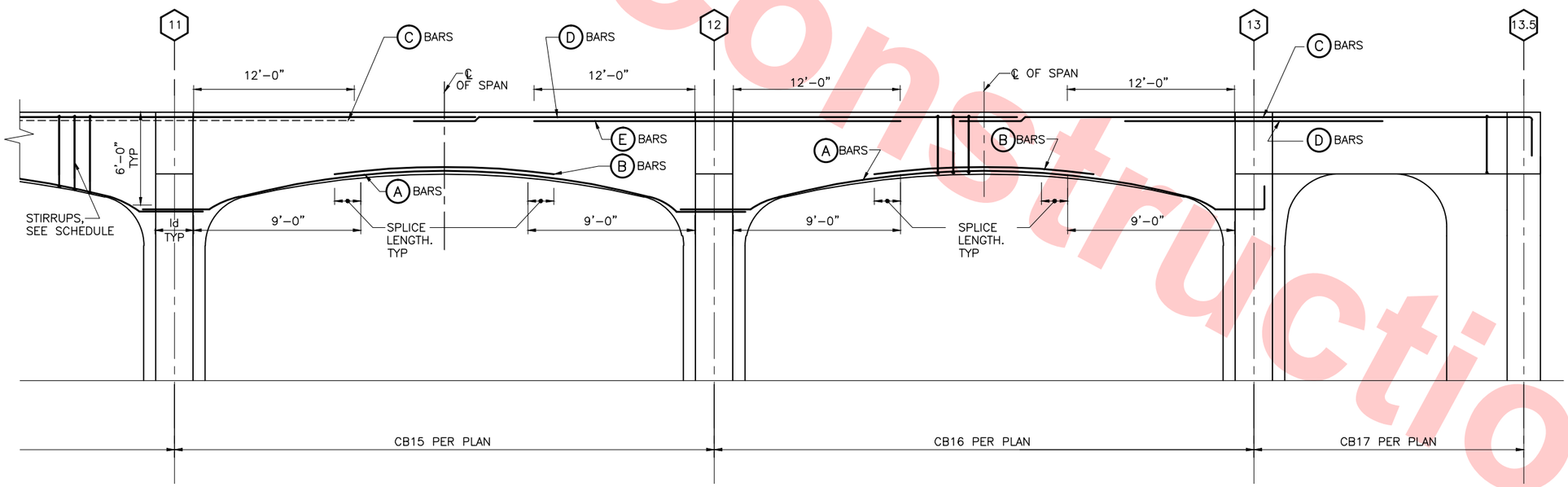

FOR REFERENCE ONLY AND NOT FOR REVIEW. THIS DRAWING WAS ALREADY SUBMITTED UNDER DU23-WP08 RFC TRENCH PACKAGE.

SECTION @ ARCH GIRDERS GRIDS B & C

CONCRETE GIRDER REINFORCEMENT DIAGRAM
SCALE: 1/4"=1'-0"

A DB-S774 DB-S765

Not For Construction

REV	DATE	BY	SUB	APP	DESCRIPTION
0	20130710				READINESS FOR CONSTRUCTION

DESIGNED BY J. REBER, S.E.
DRAWN BY P. DIAZ
CHECKED BY M. TARAZI
IN CHARGE M. TARAZI
DATE 20130710

REGISTERED PROFESSIONAL ENGINEER NOMAN FUAD TARAZI # S 3185 EXP. 6/30/14 STRUCTURAL STATE OF CALIFORNIA

Skanska Shimmick Herzog
1436 California Circle
Milpitas, California 95035
A Joint Venture

MFT Consulting Engineers, Inc. Anil Verma Associates, Inc.
1773 San Pablo Ave., Suite A3 (510) 222-4106
Pinole, CA 94564 Fax (510) 222-6418

Lockwood, Andrews & Newnam, Inc. A LAN & MAY COMPANY | T·Y·LIN INTERNATIONAL

SUBMITTED _____ APPROVED _____

VTA BART SILICON VALLEY
BART SILICON VALLEY BERRYESSA EXTENSION

LINE, TRACK, STATIONS AND SYSTEMS
DESIGN UNIT 023
MILPITAS STATION
CONCRETE BEAM/GIRDER
DETAILS
SHEET 1 OF 1

CADD FILENAME C700-S-DB-S774.dwg
SIZE D | SCALE 1/4" = 1'-0"
CONTRACT NO. C700 | REV. 0
AREA CODE DB | SHEET NO. S774 | PAGE NO. 0271

cad-02 Jul 08, 2013 – 10:16am P:\BART Berryessa Extension Line\S – STRUCTURAL MILPITAS\WORK_6-10-2012\C700-S-DB-S774.dwg

CONTROL JOINTS SHALL OCCUR AT 40'–0" OC (MAXIMUM) OR AS SHOWN ON PLANS. JOINT SHALL BE CONTINUOUS FROM TOP OF FOOTING TO TOP OF WALL. CHORD STEEL SHALL PASS THROUGH JOINT WITHOUT INTERRUPTION. CHORD STEEL LAPS SHALL NOT OCCUR WITHIN 4'–0" OF A MASONRY CONTROL JOINT. VERIFY THE LOCATION OF ALL JOINTS WITH THE ARCHITECTURAL DRAWINGS PRIOR TO THE COMMENCEMENT OF WORK.

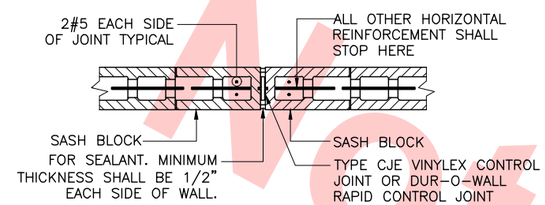

ALSO REFERENCE SPECIFICATIONS FOR ACCEPTABLE MANUFACTURERS AND ALTERNATES. SEE OTHER DETAILS FOR HORIZONTAL REINFORCING REQUIREMENTS, SPACING(S), ETC

MASONRY CONTROL JOINTS (1)
SCALE: NTS — DB–S775

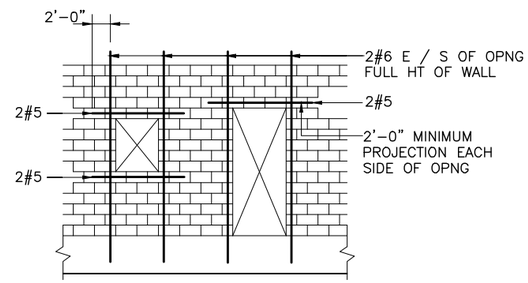

VERTICAL STELL SHALL BE FULL HEIGHT EACH SIDE OF OPNG. PROVIDE FOOTING DOWELS TO MATCH VERTICAL STEEL. HORIZONTAL STEEL SHALL BE IN BOND BEAMS OR LINTEL UNITS OR BOTH AND SHALL PROJECT 2'–0" MINIMUM BEYOND THE EDGES OF THE OPENINGS UNO

MIN. REINF. AROUND OPEN'G (2)
SCALE: NTS — DB–S775

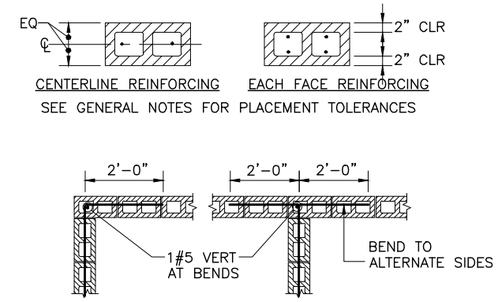

ALL MASONRY WALLS SHALL BE GROUTED SOLID UNLESS SPECIFICALLY NOTED OTHERWISE ON THE FOUNDATION PLAN. AT LEAST ONE #5 SHALL BE PLACED AT ALL CORNERS AND INTERSECTIONS IN ADDITION TO THE REGULAR WALL STEEL. SEE CONCRETE WALL INTERSECTION DETAIL FOR DOUBLE CURTAIN REINFORCING CONDITION, DO SIMILAR.

MASONRY WALL REINF. (3)
SCALE: NTS — DB–S775

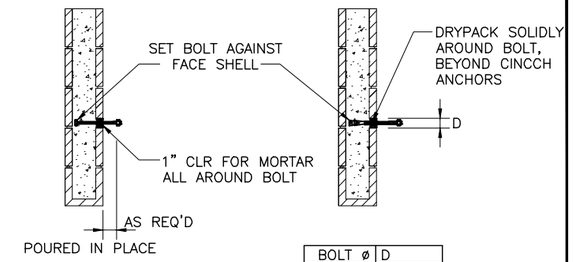

BOLT ø	D
1/2"	1"
3/8"	1–1/8"
3/4"	1–3/8"
7/8"	1–1/2"

IN EXPANSION ANCHORS

BOLTS IN CONCRETE BLOCK (4)
SCALE: NTS — DB–S775

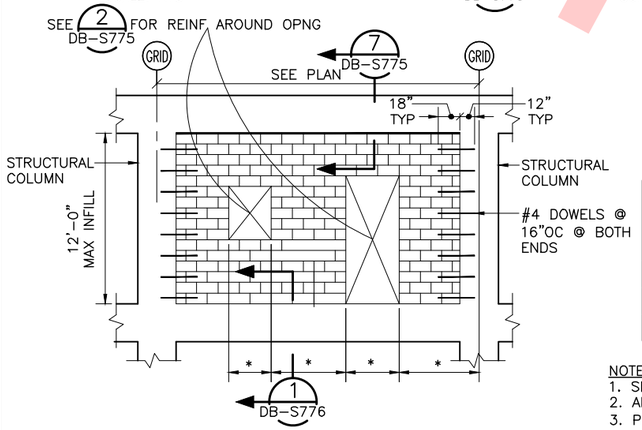

*–SEE ARCHITECTURAL PLANS FOR OPENING SIZES AND LOCATIONS

TYP. INFILL MASONRY WALLS (5)
SCALE: NTS — DB–S775

SYMBOL	NOMINAL THICKNESS OF WALL (INCHES)	MAX DESIGN HT FLOOR TO ROOF (FEET)	VERTICAL REINF STEEL	HOR REINF STEEL	SPEC INSP REQ'D PER CBC	COMMENTS SEE NOTES
W1						
W2						
W3						

NOTE:
1. SEE FOUNDATION PLAN FOR LOCATION OF WALL TYPE SYMBOLS
2. ALL WALLS SHALL BE GROUTED SOLID.
3. PROVIDE MASONRY CONTROL JOINTS @ 40'–0" OC MAX SPACING. SEE 1 DB–S775

CMU WALL REINF. SCHEDULE (6)
SCALE: NTS — DB–S775

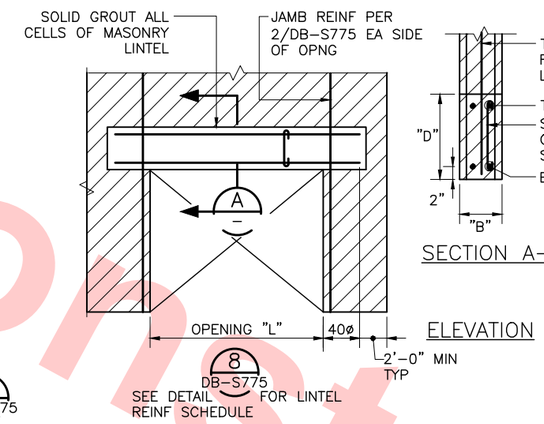

FOR REFERENCE ONLY AND NOT FOR REVIEW. THIS DRAWING WAS ALREADY SUBMITTED UNDER DU23-WP08 RFC TRENCH PACKAGE.

LINTEL DETAIL (7)
SCALE: NTS — DB–S775

MARK	MASONRY ROUGH OPENING	NORMAL LINTEL SIZE	REINFORCING			COMMENTS
	MAX "L"	"B" x "D"	BOT BARS	STIRRUPS	STOP BARS	
L1						
L2						
L3						

NOTES:
1. SEE DETAIL 7 FOR DEFINITION OF "L", "B", "D" & STANDARD LINTEL DETAIL GROUT ALL LINTELS SOLID.
2. STIRRUPS MAY BE SINGLE LEG W/180 HOOK EA END

MASONRY LINTEL SCHEDULE (8)
SCALE: N.T.S. — DB–S775

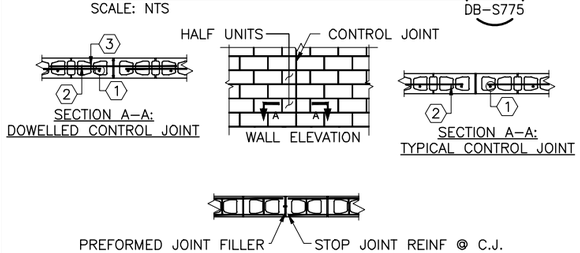

SECTION A–A: TYPICAL CONTROL JOINT W/JOINT REINF

(1) ADDITIONAL VERT BARS ON EA SIDE OF ALL C.J.

(2) TERMINATE ALL NON–STRUCTURAL REINF 2" FROM C.J.

(3) PROVIDE 4'–0" LONG SMOOTH DOWELS ACROSS THE JOINT. PREVENT BOND BTW BAR & GROUT W/GREASE OR A PLASTIC SLEEVE. CAP ALL DOWELS TO ALLOW 1" OF MOVEMENT

TYP. C.J. IN CONCRETE MASONRY WALLS (9)
SCALE: NTS — DB–S775

CONTROL JOINTS SHALL OCCUR AT 40'–0" OC (MAXIMUM) OR AS SHOWN ON PLANS. JOINT SHALL BE CONTINUOUS FROM TOP OF FOOTING TO TOP OF WALL. CHORD STEEL SHALL PASS THROUGH JOINT WITHOUT INTERRUPTION. CHORD STEEL LAPS SHALL NOT OCCUR WITHIN 4'–0" OF A MASONRY CONTROL JOINT. VERIFY THE LOCATION OF ALL JOINTS WITH THE ARCHITECTURAL DRAWINGS PRIOR TO THE COMMENCEMENT OF WORK.

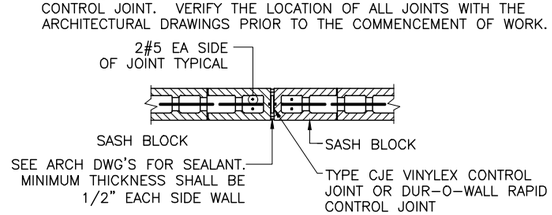

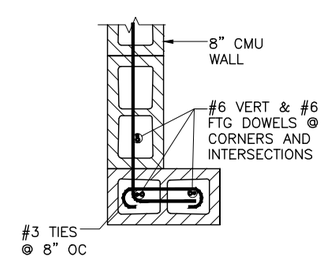

PLAN DETAIL (10)
SCALE: NTS — DB–S775

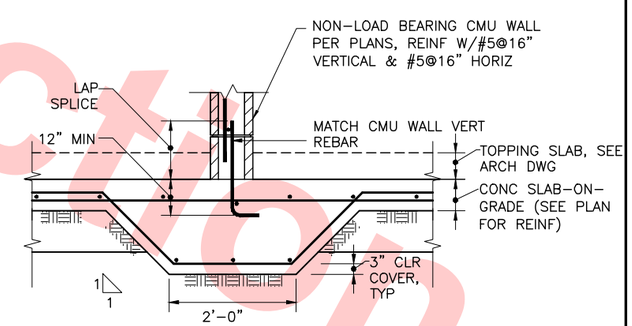

CMU WALL FOOTING (11)
SCALE: NTS — DB–S775

REV	DATE	BY	SUB	APP	DESCRIPTION
0	20130531				READINESS FOR CONSTRUCTION

DESIGNED BY J. REBER, S.E.
DRAWN BY P. DIAZ
CHECKED BY M. TARAZI
IN CHARGE M. TARAZI
DATE 20130531

REGISTERED PROFESSIONAL ENGINEER NOMAN FUAD TARAZI # S 3185 EXP. 6/30/14 STRUCTURAL STATE OF CALIFORNIA

Skanska Shimmick Herzog
1436 California Circle Milpitas, California 95035
A Joint Venture

MFT Consulting Engineers, Inc. Anil Verma Associates, Inc. 1773 San Pablo Ave., Suite A3 (510) 222-4106 Pinole, CA 94564 Fax (510) 222-6418
Lockwood, Andrews & Newnam, Inc. A CH2M HILL COMPANY
T-Y-LIN INTERNATIONAL

SUBMITTED _____ APPROVED _____

VTA BART SILICON VALLEY
BART SILICON VALLEY BERRYESSA EXTENSION

LINE, TRACK, STATIONS AND SYSTEMS
DESIGN UNIT 023
MILPITAS STATION
TYPICAL MASONRY
SECTIONS AND DETAILS
SHEET 1 OF 2

CADD FILENAME C700–S–DB–S775.dwg
SIZE D — SCALE NONE
CONTRACT NO. C700 — REV. 0
AREA CODE DB — SHEET NO. S775 — PAGE NO. 0272

cad–02 Jul 05, 2013 – 1:57pm P:\BART Berryessa Extension Line\S – STRUCTURAL MILPITAS\WORK_6–10–2012\C700–S–DB–S775.dwg

Not For Construction

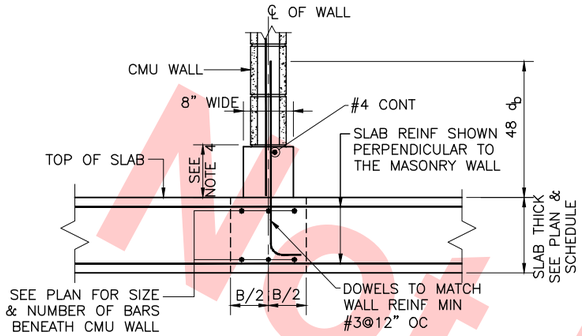

NOTE:

1. IF SLAB REINF ARE PARALLEL TO THESE BARS, PLACE @ 1" CLEARANCE FROM SLAB SURFACES TOP & BOT.
2. BAR LENGTH ARE THE WALL LENGTH SHOWN ONT HE PLAN PLUS AN EMBEDMENT LENGTH WHENEVER POSSIBLE; OTHERWISE PROVIDE A STANDARD HOOK @ THE ENDS.
3. WHEN THE DISTANCE "B" ARE NOT CALLED OUT ON PLAN THESE DIMENSION APPLIES B=12" FOR 3 BARS (AS SHOWN HERE) B=18" FOR 4 BARS
4. HEIGHT OF CURB AS REQUIRED TO MAINTAIN A HORIZONTAL SURFACE TO PLACE THE CMU BLOCK; BUT MAY NOT EXCEED CMU BLOCK PLUS GROUP HEIGHT

TYP. CMU WALL ON TOP OF SLAB W/O BM. UNDERNEATH

1 DB-S776 — DB-S775

SCALE: NTS

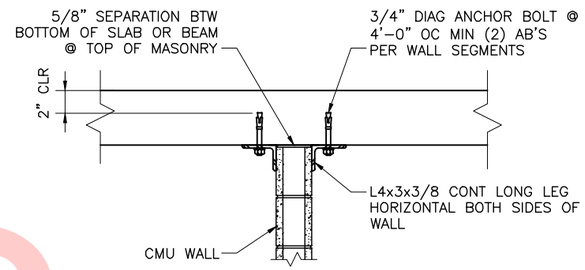

TYPICAL TOP OF CMU WALL WITH SEPARATION JOINTS

2 DB-S776 — DB-S603

SCALE: NTS

Not For Construction

FOR REFERENCE ONLY AND NOT FOR REVIEW. THIS DRAWING WAS ALREADY SUBMITTED UNDER DU23-WP08 RFC TRENCH PACKAGE.

REV	DATE	BY	SUB	APP	DESCRIPTION
0	20130531				READINESS FOR CONSTRUCTION

DESIGNED BY J. REBER, S.E.
DRAWN BY P. DIAZ
CHECKED BY M. TARAZI
IN CHARGE M. TARAZI
DATE 20130531

REGISTERED PROFESSIONAL ENGINEER HUMAN FUAD TARAZI # S 3185 EXP. 6/30/14 STRUCTURAL STATE OF CALIFORNIA

Skanska Shimmick Herzog
1436 California Circle
Milpitas, California 95035
A Joint Venture

MFT Consulting Engineers, Inc. Anil Verma Associates, Inc.
1773 San Pablo Ave., Suite A3 (510) 222-4106
Pinole, CA 94564 Fax (510) 222-6418

Lockwood, Andrews & Newnam, Inc. A LAN & BALY COMPANY | T·Y·LIN INTERNATIONAL

SUBMITTED _____ APPROVED _____

BART SILICON VALLEY BERRYESSA EXTENSION

LINE, TRACK, STATIONS AND SYSTEMS DESIGN UNIT 023
MILPITAS STATION
TYPICAL MASONRY
SECTIONS AND DETAILS
SHEET 2 OF 2

CADD FILENAME C700-S-DB-S776.dwg
SIZE D | SCALE NONE
CONTRACT NO. C700 | REV. 0
AREA CODE DB | SHEET NO. S776 | PAGE NO. 0273

cad-02 Jul 05, 2013 - 1:57pm P:\BART Berryessa Extension Line\S - STRUCTURAL MILPITAS\WORK_6-10-2012\C700-S-DB-S776.dwg

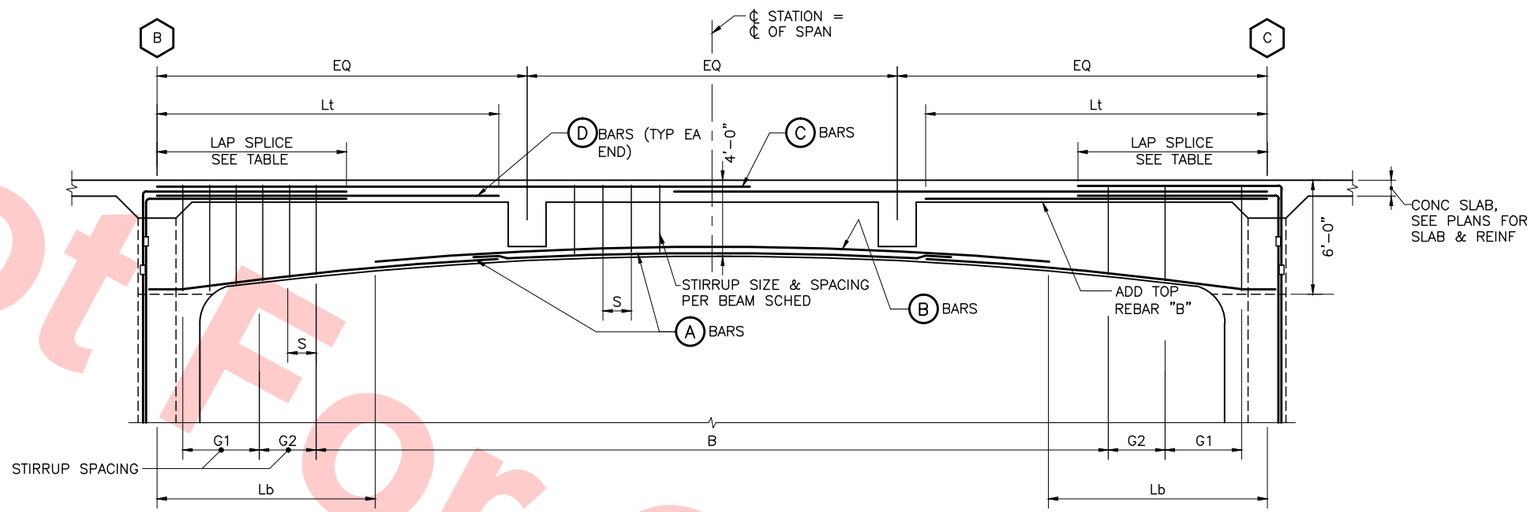

SECTION @ ARCH GIRDERS GRIDS 2 & 3 (A / DB-S777) DB-S766

CONCRETE GIRDER REINFORCEMENT DIAGRAM
SCALE: 1/4"=1'-0"

Not For Construction

FOR REFERENCE ONLY AND NOT FOR REVIEW. THIS DRAWING WAS ALREADY SUBMITTED UNDER DU23-WP08 RFC TRENCH PACKAGE.

REV	DATE	BY	SUB	APP	DESCRIPTION
0	20130710				READINESS FOR CONSTRUCTION

DESIGNED BY J. REBER, S.E.
DRAWN BY P. DIAZ
CHECKED BY M. TARAZI
IN CHARGE M. TARAZI
DATE 20130710

REGISTERED PROFESSIONAL ENGINEER HUMAN FUAD TARAZI # S 3185 EXP. 6/30/14 STRUCTURAL STATE OF CALIFORNIA

Skanska Shimmick Herzog
1436 California Circle
Milpitas, California 95035
A Joint Venture

MFT Consulting Engineers, Inc. Anil Verma Associates, Inc.
1773 San Pablo Ave., Suite A3 (510) 222-4106
Pinole, CA 94564 Fax (510) 222-6418

Lockwood, Andrews & Newnam, Inc. A LAN & BALY COMPANY | T-Y-LIN INTERNATIONAL

SUBMITTED _____ APPROVED _____

VTA BART SILICON VALLEY
BART SILICON VALLEY BERRYESSA EXTENSION

LINE, TRACK, STATIONS AND SYSTEMS
DESIGN UNIT 024
MILPITAS STATION
CONCRETE BEAM/GIRDER
DETAILS
SHEET 1 OF 1

CADD FILENAME C700-S-DB-S777.dwg
SIZE D | SCALE 1/4" = 1'-0"
CONTRACT NO. C700 | REV. 0
AREA CODE DB | SHEET NO. S777 | PAGE NO. 0274

cad-02 Jul 05, 2013 - 1:57pm P:\BART Berryessa Extension Line\S - STRUCTURAL MILPITAS\WORK_6-10-2012\C700-S-DB-S777.dwg

Santa Clara Valley Transportation Authority

____NO EXCEPTIONS TAKEN (NET)
____MAKE CORRECTIONS NOTED (MCN)
____AMEND AND RESUBMIT (A/R)

Any action shown above is subject to the terms of the contract and does not relieve the Contractor of any of its obligations under the contract, including design and detailing.

Contract No.: DB11002F

By: _____ Date: _____

(A) DECK WELDING SCHEDULE

MK	DECK TYPE	DEPTH & GAUGE	PERPENDICULAR SUPPORTS	PARALLEL SUPPORTS	SIDE LAPS	DIAPHRAGM SHEAR CAPACITY
D1	VERSA-DECK 3.5 LS ACOUSTICAL ROOF DECK	3 1/2"x 18GA	6 PW PER SHEET	PW @ 12" CC	SSW @ 12" CC	988 #/ft AT 10'-0" SPAN
D2	PLB-36 ROOF DECK	1 1/2" x 18" GA	7 PW PER SHEET	PW @ 12" CC	VSC @ 12" CC	977 #/ft AT 10'-0" SPAN
D3	W3 FORMLOK FLOOR DECK	3"x18" GA	4 PW PER SHEET	PW @ 8" CC	TSW @ 12" OC	2080#/ft AT 10'-0" SPAN

1. PW = 3/4" DIAMETER (1/2" EFFECTIVE DIA) PUDDLE WELD; TSW = 1 1/2" MIN TOP SEAM WELD; BP = BUTTON PUNCH: VSV= VERCO SIDE LAP CONNECTION (PUNCHLOK) OR EQUIVALENT: X-ENP = HILTI X-ENP-19-L15: #10=#10 SCREWS: FW=1 1/2" LONG FILLET WELDS
2. METAL DECK D1 SHALL BE CONSOLIDATED SYSTEMS, INC OR APPROVED EQUAL, OF TYPE AND GAUGE SHOWN ON PLANS AND WELDED AS SHOWN ABOVE.
3. METAL DECK D2 & D3 SHALL BE VERCO OR APPROVED EQUAL, OF TYPE AND GAUGE SHOWN ON PLANS AND WELDED AS SHOWN ABOVE.
4. SEE B DB-S781 FOR TYPICAL WELD PATTERNS.
5. FOR METAL DECK WELDING AT STRUCTURAL STEEL SUPPORT SEE 1 DB-S781 AND 7 DB-S781 FOR DECK D1 AND D2, 1 DB-S784 FOR D3
6. ALL METAL DECK SHALL HAVE TWO SPANS MINIMUM.
7. PROVIDE SHORING AS REQUIRED AT ALL DECKS PER MFR RECOMMENDATIONS.

(B) METAL DECK WELD PATTERNS

DECK TYPE	DECK PROFILE AND WELD	NO 3/4" ø PW PER SHEET
VERSA-DECK 3.5LS ACOUSTICAL	24"	6
PLB-36	36"	7
W3 FORMLOK	36"	4

(C) MINIMUM STRUCTURAL PROPERTIES OF METAL DECK

DECK TYPE (DEPTH & GAUGE)	I (in^4) (PER FOOT)	+S (in^3) (PER FOOT)	- S (in^3) (PER FOOT)
VERSA-DECK 3.5LS ACOUSTICAL	2.48	1.08	1.181
PLB-36	0.302	0.322	0.335
W3 FORMLOK	1.203	0.767	0.767

NOTE:
1. SEE "METAL DECK NOTES" ON DB-S001X FOR TYPICAL MATERIAL PROPERTIES (Fy) & FINISHES.

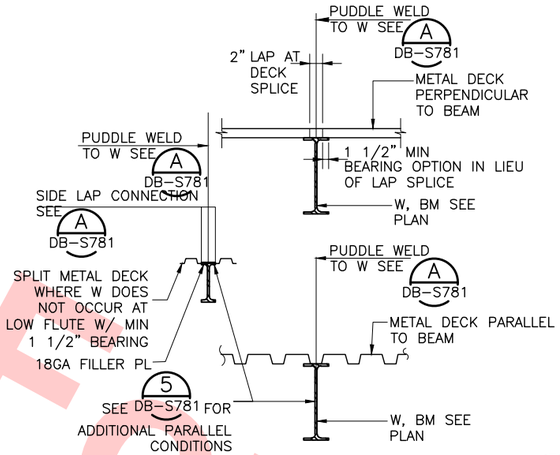

METAL DECK WITHOUT CONC TO WF BM. (1 DB-S781)
SCALE: NTS

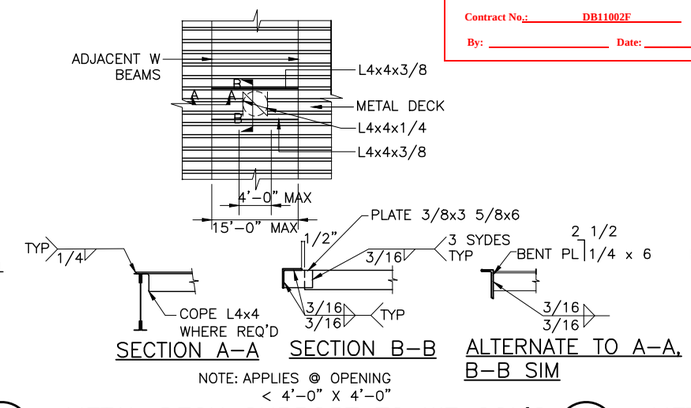

NOTE: APPLIES @ OPENING < 4'-0" X 4'-0"

METAL DECK SUPPORT TO WF COL'S. (2 DB-S781)
SCALE: NTS

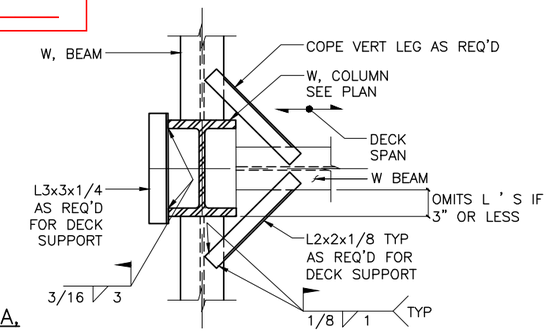

METAL DECK SUPPORT TO WF COL'S. (3 DB-S781)
SCALE: NTS

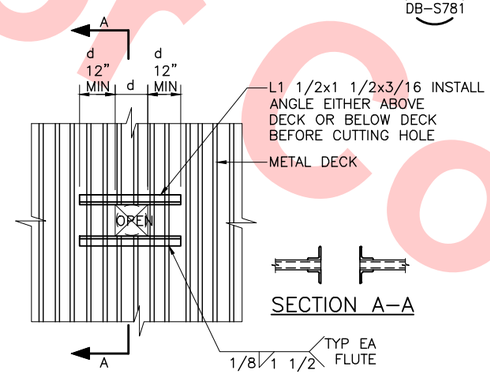

NOTE: APPLIES AT HOLES FROM 6" TO 24" WIDE IN METAL DECK WITHOUT CONCRETE. (SEE 1 DB-S783 FOR OPENINGS UP TO 4'-0"x4'-0")

DETAIL (4 DB-S781)
SCALE: NTS

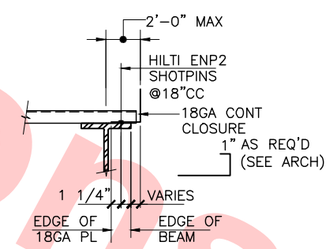

BEAM PERPENDICULAR TO DECK

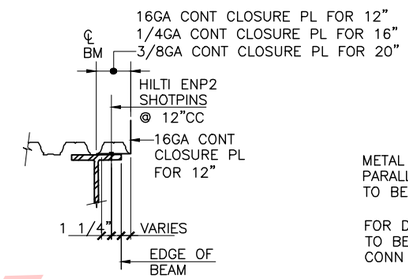

BEAM PARALLEL TO DECK

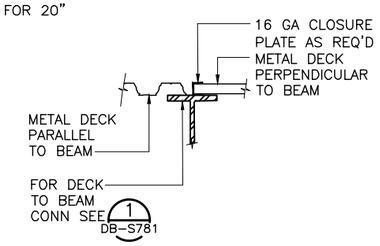

BEAM PARALLEL TO DECK

METAL DECK WITHOUT CONC. EDGE (5 DB-S781)
SCALE: NTS

DETAIL (6 DB-S781)
SCALE: NTS

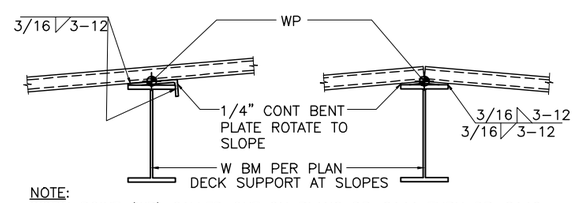

NOTE:
WORK POINT (WP) CALLED OUT ON PLANS DB-S141 THRU DB-S146 REFERS TO ELEVATION OF BOTTOM OF METAL DECK/TOP OF BENT PLATE @ ℄ OF BEAM, SEE 9 DB-S781

DETAIL (7 DB-S781)
SCALE: NTS

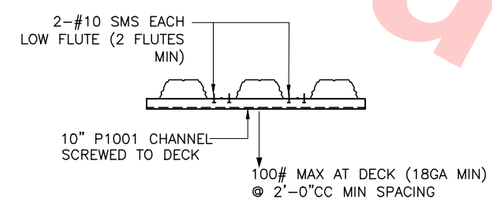

METAL DECK W/O CONCRETE

DETAIL (8 DB-S781)
SCALE: NTS

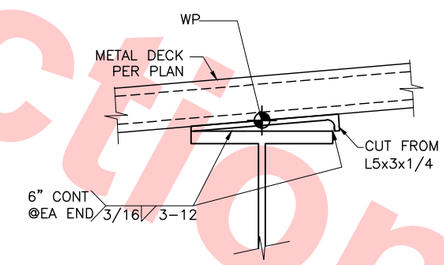

DETAIL (9 DB-S781)
SCALE: NTS

REV	DATE	BY	SUB	APP	DESCRIPTION
0	20130710				READINESS FOR CONSTRUCTION

DESIGNED BY J. REBER, S.E.
DRAWN BY P. DIAZ
CHECKED BY M. TARAZI
IN CHARGE M. TARAZI
DATE 20130710

REGISTERED PROFESSIONAL ENGINEER SHAH FUAD YAZDANI # S-3185 EXP. 6/30/14 STRUCTURAL STATE OF CALIFORNIA

Skanska Shimmick Herzog
1436 California Circle Milpitas, California 95035
A Joint Venture

MFT CONSULTING ENGINEERS, INC. 1773 San Pablo Ave., Suite A3 Pinole, CA 94564 (510) 222-4106 Fax (510) 222-5613
Anil Verma Associates, Inc.
Lockwood, Andrews & Newnam, Inc. A LINA & BALT COMPANY
T-Y-LIN INTERNATIONAL

SUBMITTED
APPROVED

VTA BART SILICON VALLEY
BART SILICON VALLEY BERRYESSA EXTENSION

LINE, TRACK, STATIONS AND SYSTEMS
DESIGN UNIT 023
MILPITAS STATION
TYPICAL METAL DECK SECTIONS AND DETAILS
SHEET 1 OF 4

CADD FILENAME C700-S-DB-S781.dwg
SIZE D | SCALE NONE
CONTRACT NO. C700 | REV. 0
AREA CODE DB | SHEET NO. S781 | PAGE NO. 0275

cad-02 Jul 05, 2013 - 1:58pm P:\BART Berryessa Extension Line\S - STRUCTURAL MILPITAS\WORK_6-10-2012\C700-S-DB-S781.dwg

Not For Construction

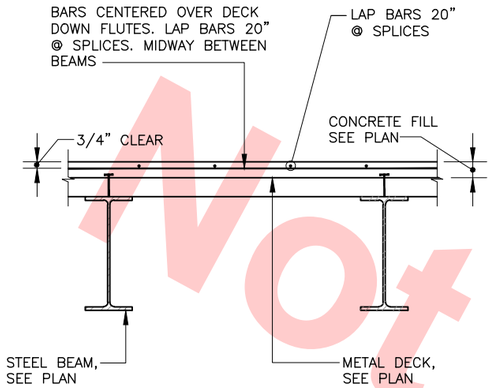

NOTE:
STAGGER SPLICES IN ADJACENT BARS

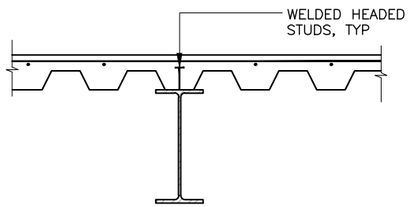

TYPICAL SECTION

TYP. REINFORCEMENT FOR CONC. FILL OVER METAL DECK (1)

SCALE: 1"=1'-0" DB-S782

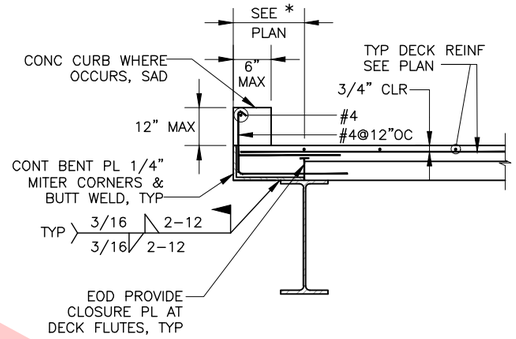

DECK PERPENDICULAR TO EDGE

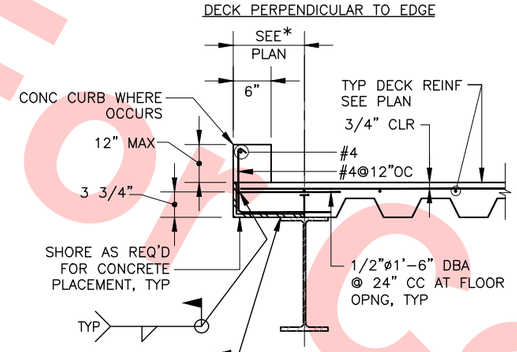

DECK PARALLEL TO EDGE

* USE WHERE DECK OVERHANG IS 1'-6" OR LESS. SEE ALSO 3/DB-S782

TYP. EDGE OF DECK DETAILS (2)

SCALE: 1"=1'-0" DB-S782

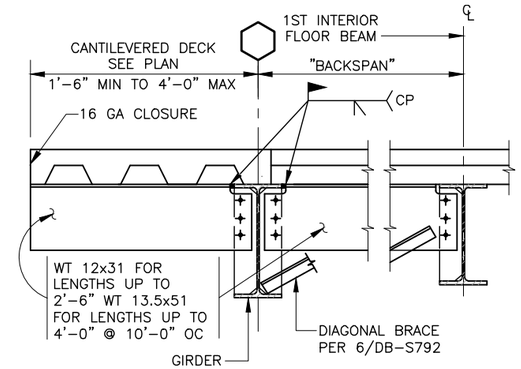

NOTE:
FOR CONDITION W/ INTERIOR FLOOR DECK PARALLEL TO GIRDER (& FLOOR BEAMS PERPENDICULAR TO GIRDER) DELETE "BACKSPAN" WT'S

TYP. EDGE OF DECK (3)

SCALE: 1"=1'-0" DB-S782

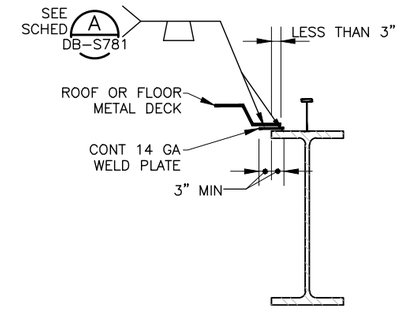

TYP. WELDS PARALLEL TO DECK WHERE SIDE BEARING IS LESS THAN 3" (4)

SCALE: 1"=1'-0" DB-S782

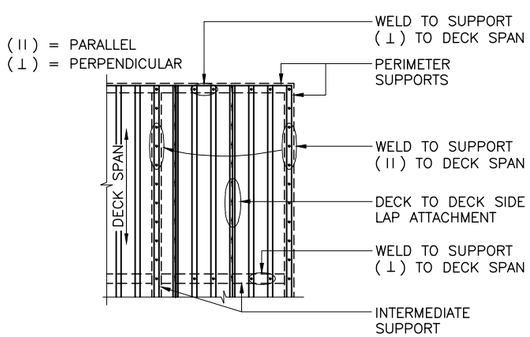

TYP. WELDS PARALLEL TO DECK WHERE SIDE BEARING IS LESS THAN 2" (6)

SCALE: 1"=1'-0" DB-S782

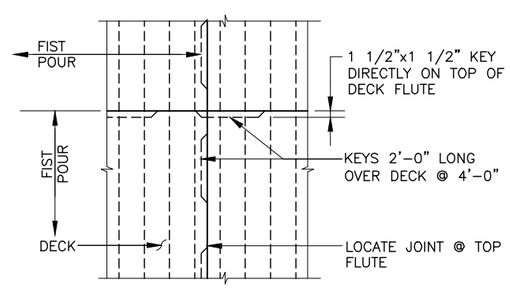

NOTES:
1. SLAB REINF CONT THRU JOINT UN
2. SEE PLAN FOR LOCATION OF CJ

CONSTRUCTION JOINT IN CONCRETE FILL OVER DECK (7)

SCALE: 1"=1'-0" DB-S782

Santa Clara Valley Transportation Authority

____NO EXCEPTIONS TAKEN (NET)
____MAKE CORRECTIONS NOTED (MCN)
____AMEND AND RESUBMIT (A/R)

Any action shown above is subject to the terms of the contract and does not relieve the Contractor of any of its obligations under the contract, including design and detailing.

Contract No.: DB11002F

By: _____ Date: _____

Not For Construction

REV	DATE	BY	SUB	APP	DESCRIPTION
0	20130710				READINESS FOR CONSTRUCTION

DESIGNED BY J. REBER, S.E.
DRAWN BY P. DIAZ
CHECKED BY M. TARAZI
IN CHARGE M. TARAZI
DATE 20130710

REGISTERED PROFESSIONAL ENGINEER SOHAM FUAD TAHER S-3185 EXP. 6/30/14 STRUCTURAL STATE OF CALIFORNIA

Skanska Shimmick Herzog
1436 California Circle
Milpitas, California 95035
A Joint Venture

MFT Consulting Engineers, Inc. 1773 San Pablo Ave., Suite A3 Pinole, CA 94564 (510) 222-4106 Fax (510) 222-4118
Anil Verma Associates, Inc.
Leslewood, Andrews & Newnam, Inc. A LAN & BALY COMPANY
T-Y-LIN INTERNATIONAL
SUBMITTED
APPROVED

BART SILICON VALLEY
BART SILICON VALLEY BERRYESSA EXTENSION

LINE, TRACK, STATIONS AND SYSTEMS DESIGN UNIT 023
MILPITAS STATION
TYPICAL METAL DECK SECTIONS AND DETAILS
SHEET 2 OF 4

CADD FILENAME C700-S-DB-S782.dwg
SIZE D | SCALE AS NOTED
CONTRACT NO. C700 | REV. 0
AREA CODE DB | SHEET NO. S782 | PAGE NO. 0276

cad-02 Jul 05, 2013 - 1:58pm P:\BART Berryessa Extension Line\S - STRUCTURAL MILPITAS\WORK_6-10-2012\C700-S-DB-S782.dwg

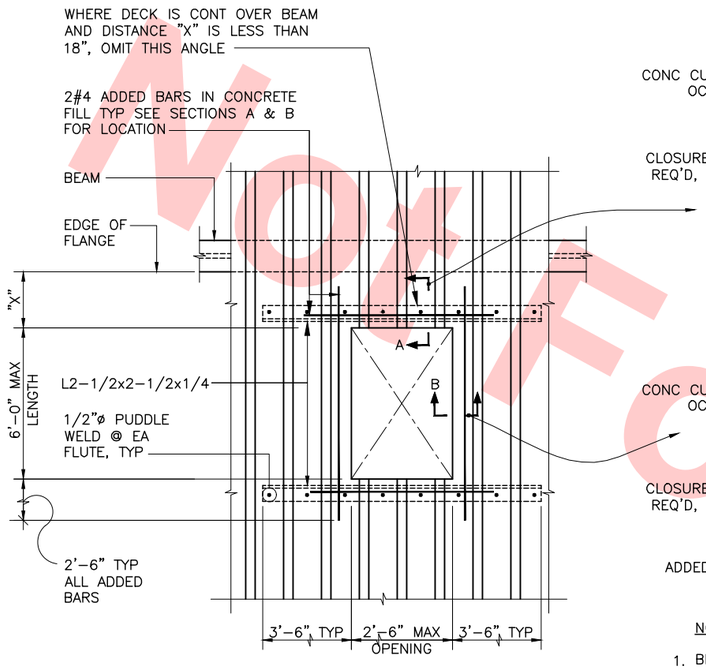

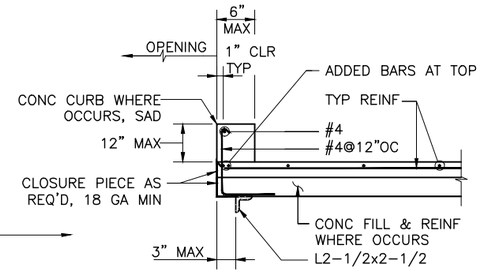

SECTION A

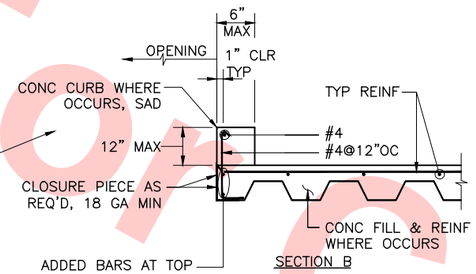

SECTION B

NOTES:

1. BLOCK OPENING AND CUT DECK AFTER CONC HAS REACHED DESIGN STRENGTH. IF OPENING IS CUT PRIOR TO THE FILL PLACEMENT, CONTRACTOR TO PROVIDE CLOSURE PIECES AND SHORING AS REQUIRED.
2. HOLES LESS THAN 6" IN DIAMETER AND CUTTING NO MORE THAN 1 WEB NEED NO REINFORCEMENT.
3. HOLES FOR MULTIPLE OPENINGS WITH A CLEAR DISTANCE LESS THAN 3x THE SIZE OF THE LARGER OPENING SHALL BE CONSIDERED AS A SINGLE OPENING

SMALL OPENING IN METAL DECK (1)

SCALE: 1"=1'-0" DB-S783

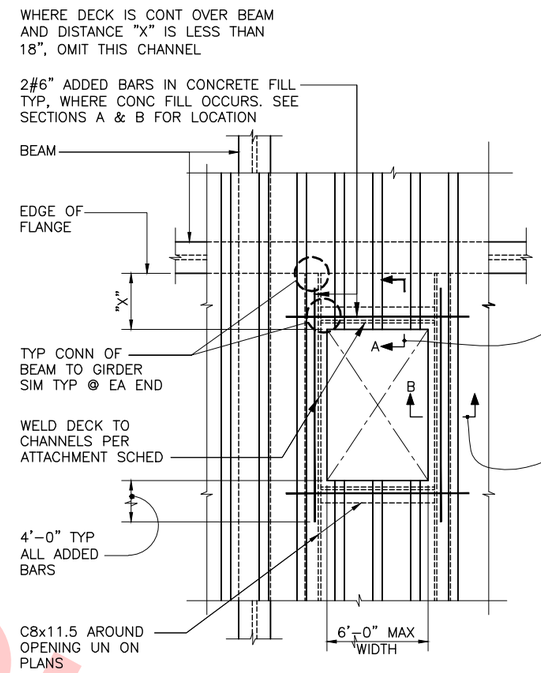

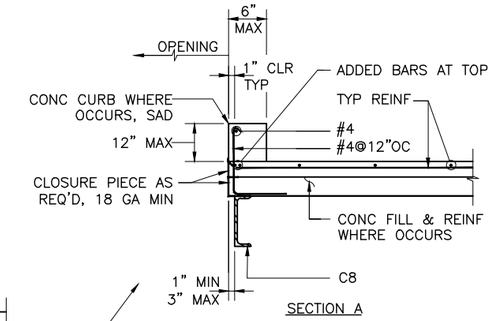

SECTION A

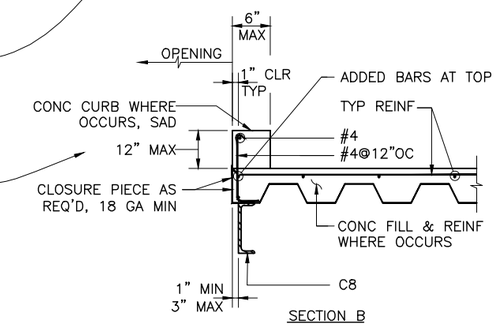

SECTION B

NOTE:
SEE PLANS FOR REINFORCEMENT AT LARGER OPENINGS

LARGE OPENING IN METAL DECK (2)

SCALE: 1"=1'-0" DB-S783

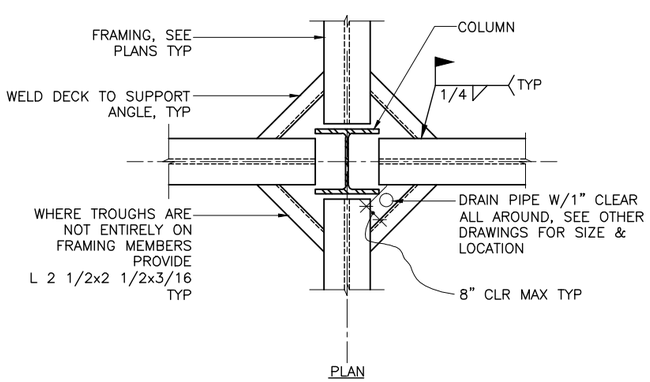

PLAN

DECK SUPPORT AT COLUMN (3)

SCALE: 1"=1'-0" DB-S783

Santa Clara Valley Transportation Authority

____NO EXCEPTIONS TAKEN (NET)
____MAKE CORRECTIONS NOTED (MCN)
____AMEND AND RESUBMIT (A/R)

Any action shown above is subject to the terms of the contract and does not relieve the Contractor of any of its obligations under the contract, including design and detailing.

Contract No.: DB11002F

By: _____ Date: _____

NOTES:

1. FOR ADDITIONAL INFORMATION SEE GENERAL NOTES AND SPECIFICATIONS.
2. SEE PLANS FOR THICKNESS OF CONCRETE FILL OVER DECK
3. UNLESS NOTED ON PLANS OR IN DECK SPECIFICATIONS, THE DETAILS AND NOTES ON THIS SHEET SHALL BE INCORPORATED INTO THE PROJECT AT ALL LOCATIONS WHERE METAL DECK IS USED, WHETHER SPECIFICALLY CALLED OUT OR NOT.
4. WHEREVER POSSIBLE, DECK LAYOUT SHALL, PROVIDE SHEETS OF SUFFICIENT LENGTH TO CONTINUOUSLY SPAN AT LEAST THREE SPANS.
5. SHORING MAY BE REQUIRED FOR METAL DECK. CONTRACTOR MAY USE A HEAVIER GAGE AS REQUIRED BY APPROVED MANUFACTURER TO AVOID SHORING.
6. DECK SHALL HAVE A MINIMUM OF 2" BEARING AT ALL SUPPORTING MEMBERS PERPENDICULAR AND PARALLEL TO DECK SPAN.
7. WHERE TWO ADJACENT DECK SHEETS ARE SUPPORTED BY ONE FRAMING MEMBER, EACH SHEET SHALL INDIVIDUALLY SATISFY THE REQUIREMENTS OF NOTE 6 AND OF THE ATTACHMENT REQUIREMENTS PER THESE NOTES.
8. SEE DETAIL 8/DB-S781 SUSPENDING CEILING, PIPING, LIGHT, FIXTURES, CONDUITS OR OTHER UTILITIES FROM DECK, AND DO NOT PLACE CONDUITS OR OTHER PIPES IN CONCRETE FILL OVER DECK.
9. ALL HEADED STUDS ARE 3/4" DIA WITH A HEIGHT OF TOTAL SLAB THICKNESS MINUS ONE INCH COVER, UNO.
10. DO NOT PROVIDE SHEAR STUDS @ GUSSET PLATES OF BRACED FRAMES.

Not For Construction

REV	DATE	BY	SUB	APP	DESCRIPTION
0	20130710				READINESS FOR CONSTRUCTION

DESIGNED BY J. REBER, S.E.
DRAWN BY P. DIAZ
CHECKED BY M. TARAZI
IN CHARGE M. TARAZI
DATE 20130710

REGISTERED PROFESSIONAL ENGINEER SOHAIL FUAD RAZZAQ # S-5185 EXP. 8/30/14 STRUCTURAL STATE OF CALIFORNIA

Skanska Shimmick Herzog
1436 California Circle Milpitas, California 95035
A Joint Venture

MFT Consulting Engineers, Inc. Anil Verma Associates, Inc. 1773 San Pablo Ave., Suite A3 (510) 222-4106 Pinole, CA 94564 Fax (510) 222-5418
Lockwood, Andrews & Newnam, Inc. A LAN & NAV COMPANY
T·Y·LIN INTERNATIONAL

SUBMITTED _____ APPROVED _____

VTA BART SILICON VALLEY
BART SILICON VALLEY BERRYESSA EXTENSION

LINE, TRACK, STATIONS AND SYSTEMS
DESIGN UNIT 023
MILPITAS STATION
TYPICAL METAL DECK
SECTIONS AND DETAILS
SHEET 3 OF 4

CADD FILENAME C700-S-DB-S783.dwg
SIZE D | SCALE AS NOTED
CONTRACT NO. C700 | REV. 0
AREA CODE DB | SHEET NO. S783 | PAGE NO. 0277

cad-02 Jul 05, 2013 - 1:58pm P:\BART Berryessa Extension Line\S - STRUCTURAL MILPITAS\WORK_6-10-2012\C700-S-DB-S783.dwg

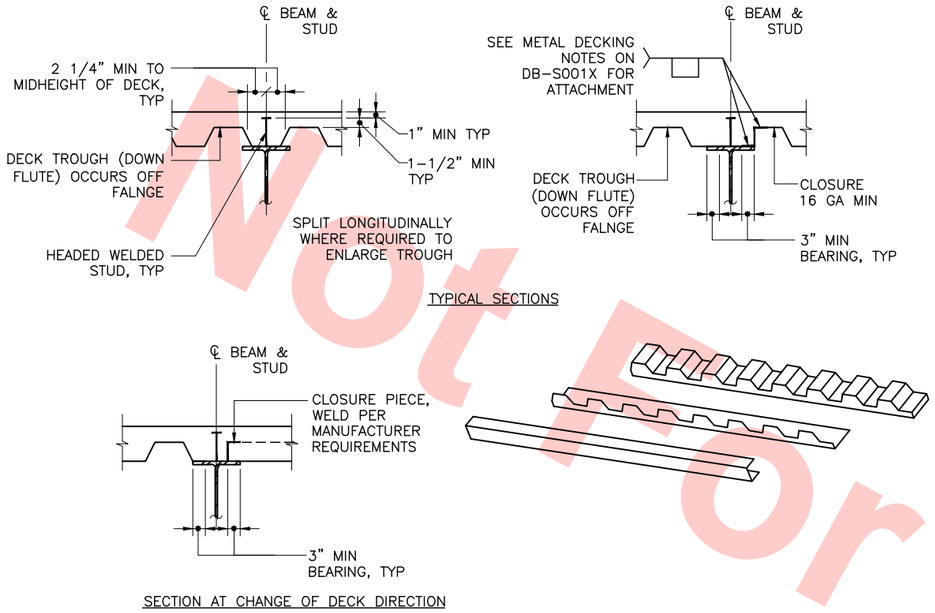

DECK AND SHEAR STUD PLACEMENT (1)

SCALE: 1"=1'-0"

DB-S784

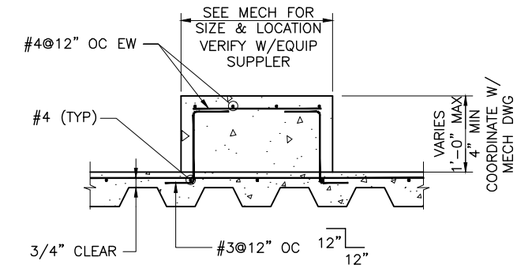

NOTE:
PLACE PAD AFTER SLAB HAS REACHED STRENGTH DESIGN

HOUSE KEEPING CONCRETE PAD (3)

SCALE: NTS

DB-784

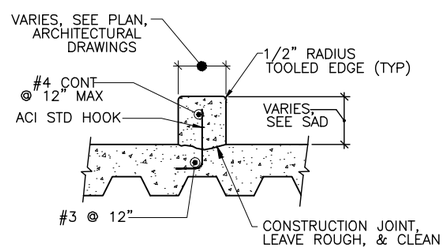

NOTES:
1. AT CONTRACTOR'S OPTION, #3 DOWELS MAY BE EPOXY GROUTED INTO SLAB, DEPTH=2/3 OF TOPPING SLAB THICKNESS AT DECK FLUTE.

CONCRETE CURB (4)

SCALE: NTS

DB-S784

Not For Construction

Santa Clara Valley Transportation Authority

____NO EXCEPTIONS TAKEN (NET)
____MAKE CORRECTIONS NOTED (MCN)
____AMEND AND RESUBMIT (A/R)

Any action shown above is subject to the terms of the contract and does not relieve the Contractor of any of its obligations under the contract, including design and detailing.

Contract No.: DB11002F

By: _____ Date: _____

REV	DATE	BY	SUB	APP	DESCRIPTION
0	20130710				READINESS FOR CONSTRUCTION

DESIGNED BY J. REBER, S.E.
DRAWN BY P. DIAZ
CHECKED BY M. TARAZI
IN CHARGE M. TARAZI
DATE 20130710

REGISTERED PROFESSIONAL ENGINEER SOHAIL FUAD VERMA # S-3185 EXP. 6/30/14 STRUCTURAL STATE OF CALIFORNIA

Skanska Shimmick Herzog
1436 California Circle
Milpitas, California 95035
A Joint Venture

MFT CONSULTING ENGINEERS, INC. 1773 San Pablo Ave., Suite A3 Pinole, CA 94564 (510) 222-4106 Fax (510) 222-4110
Anil Verma Associates, Inc.
SUBMITTED

Lockwood, Andrews & Newnam, Inc. A LEO A DALY COMPANY
T-Y-LIN INTERNATIONAL
APPROVED

BART SILICON VALLEY
BART SILICON VALLEY BERRYESSA EXTENSION

LINE, TRACK, STATIONS AND SYSTEMS DESIGN UNIT 023
MILPITAS STATION
TYPICAL METAL DECK SECTIONS AND DETAILS
SHEET 4 OF 4

CADD FILENAME C700-S-DB-S784.dwg
SIZE D | SCALE AS NOTED
CONTRACT NO. C700 | REV. 0
AREA CODE DB | SHEET NO. S784 | PAGE NO. 0278

cad-02 Jul 05, 2013 - 1:58pm P:\BART Berryessa Extension Line\S - STRUCTURAL MILPITAS\WORK_6-10-2012\C700-S-DB-S784.dwg

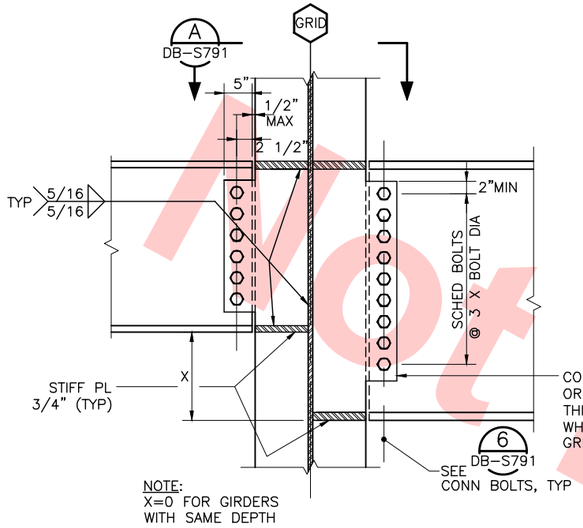

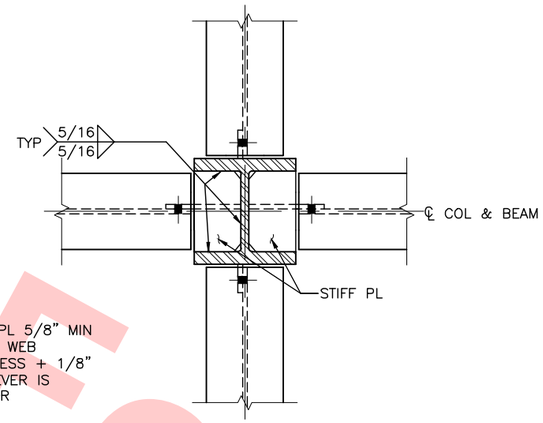

SECTION "A"

TYPICAL CONNECTION GIRDER TO COLUMN WEB (NON-MOMENT) 1 DB-S791

SCALE: 1"=1'-0"

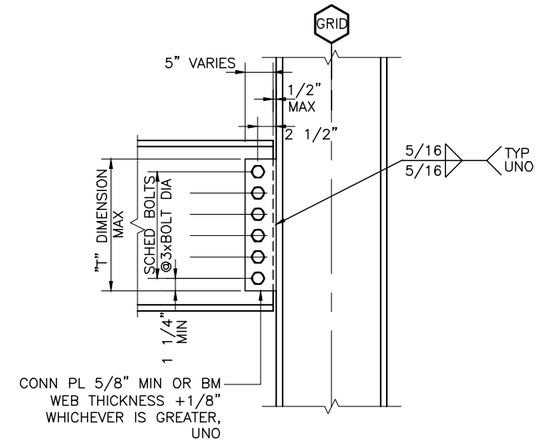

TYPICAL GIRDER TO COLUMN FLANGE (NON-MOMENT) 2 DB-S791

SCALE: 1"=1'-0"

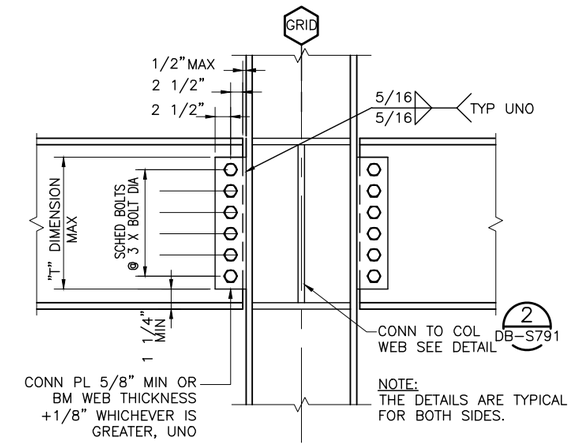

TYPICAL GIRDER TO COLUMN FLANGE CONN. (NON-MOMENT) TWO SIDES 3 DB-S791

SCALE: 1"=1'-0"

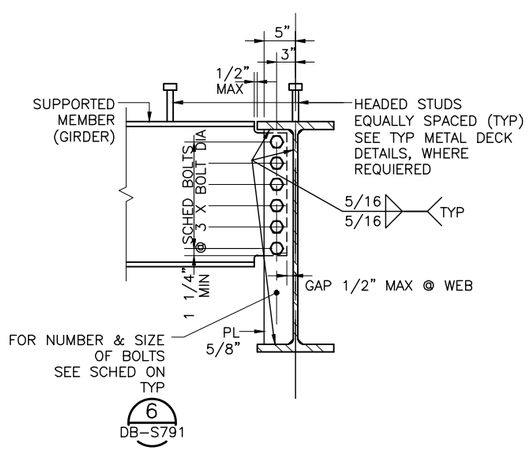

TYPICAL BEAM TO GIRDER ONE SIDE (NON-MOMENT) 4 DB-S791

SCALE: 1"=1'-0"

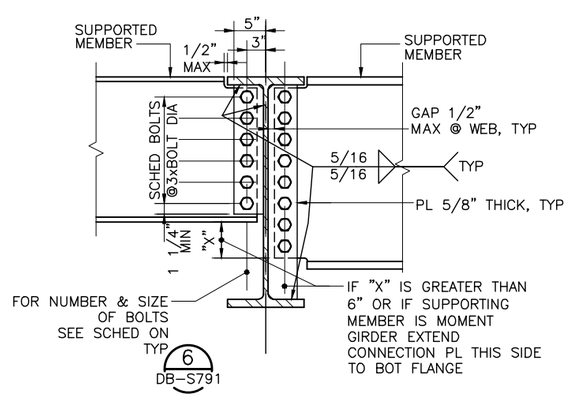

TYPICAL BEAM TO GIRDER TWO SIDES (NON-MOMENT) 5 DB-S791

SCALE: 1"=1'-0"

DEPTH OF GIRDER	NUMBER OF 7/8" BOLT DIAMETER A325N
W36 (UP TO W36x256)	11
W33	10
W30	9
W27	8
W24	7
W21	6
W18	5
W16	4
W14	3
W12	3
W10	2
W8, W6	2 – 3/4" ø

BOLT SCHEDULE FOR NON-MOMENT CONNS. 6 DB-S791

SCALE: NTS

Santa Clara Valley Transportation Authority

____NO EXCEPTIONS TAKEN (NET)
____MAKE CORRECTIONS NOTED (MCN)
____AMEND AND RESUBMIT (A/R)

Any action shown above is subject to the terms of the contract and does not relieve the Contractor of any of its obligations under the contract, including design and detailing.

Contract No.: DB11002F

By: _____ Date: _____

Not For Construction

REV	DATE	BY	SUB	APP	DESCRIPTION
0	20130710				READINESS FOR CONSTRUCTION

DESIGNED BY J. REBER, S.E.
DRAWN BY P. DIAZ
CHECKED BY M. TARAZI
IN CHARGE M. TARAZI
DATE 20130710

REGISTERED PROFESSIONAL ENGINEER SOHAN FUAD VERMA # S-3185 EXP. 6/30/14 STRUCTURAL STATE OF CALIFORNIA

Skanska Shimmick Herzog
1436 California Circle
Milpitas, California 95035
A Joint Venture

MFT CONSULTING ENGINEERS, INC. 1773 San Pablo Ave., Suite A3 Pinole, CA 94564 (510) 222-4106 Fax (510) 222-4116
Anil Verma Associates, Inc.
Lockwood, Andrews & Newnam, Inc. A LEO A DALY COMPANY
T-Y-LIN INTERNATIONAL

SUBMITTED
APPROVED

BART SILICON VALLEY
BART SILICON VALLEY BERRYESSA EXTENSION

LINE, TRACK, STATIONS AND SYSTEMS DESIGN UNIT 023
MILPITAS STATION
TYPICAL STEEL
SECTIONS AND DETAILS
SHEET 1 OF 8

CADD FILENAME C700-S-DB-S791.dwg
SIZE D | SCALE AS NOTED
CONTRACT NO. C700 | REV. 0
AREA CODE DB | SHEET NO. S791 | PAGE NO. 0279

cad-02 Jul 05, 2013 – 1:58pm P:\BART Berryessa Extension Line\S – STRUCTURAL MILPITAS\WORK_6-10-2012\C700-S-DB-S791.dwg

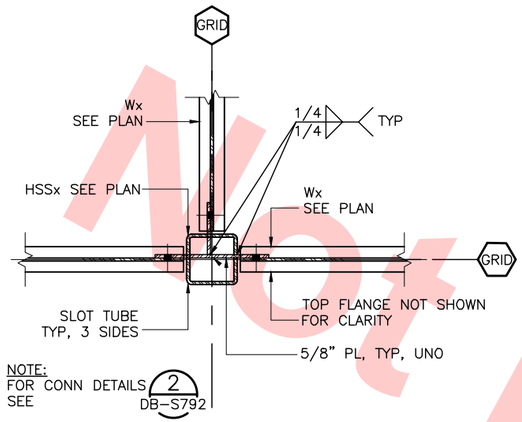

TYPICAL TUBE CONNECTION (1 / DB-S792)

SCALE: 1"=1'-0"

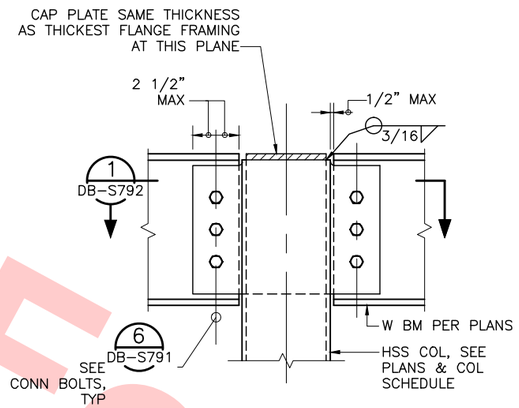

TYPICAL WF BEAM TO HSS COLUMN (2 / DB-S792)

SCALE: NTS

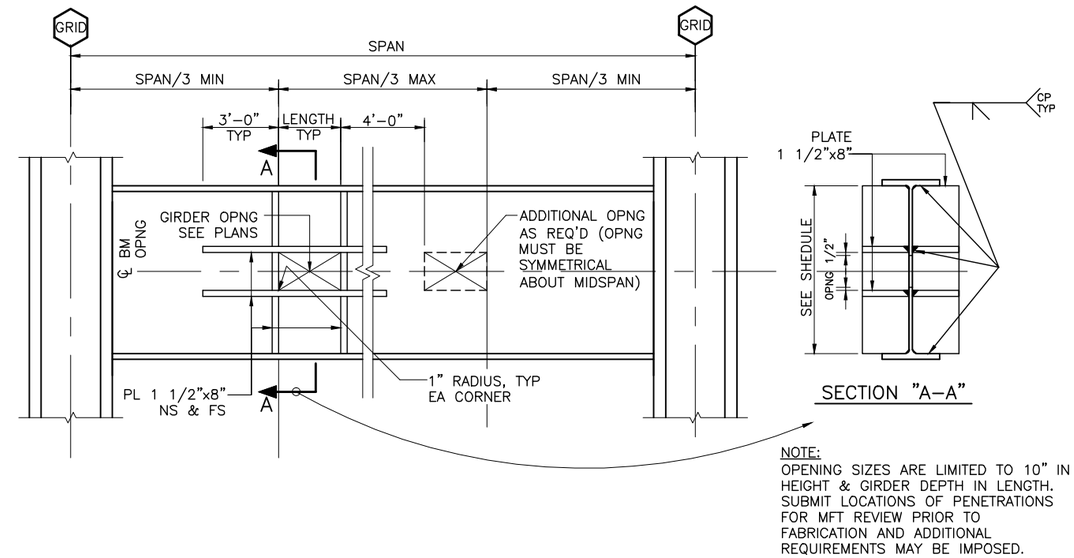

NOTE:
OPENING SIZES ARE LIMITED TO 10" IN HEIGHT & GIRDER DEPTH IN LENGTH. SUBMIT LOCATIONS OF PENETRATIONS FOR MFT REVIEW PRIOR TO FABRICATION AND ADDITIONAL REQUIREMENTS MAY BE IMPOSED.

TYPICAL OPENING IN GIRDER (4 / DB-S792)

SCALE: 1"=1'-0"

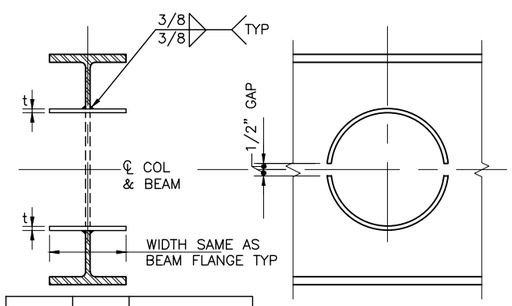

BEAM SIZE	OPNG ø DIA	CIRCULAR PLATE REINF "t" THICKNESS
W12	6"	1/2"
W14	7"	1/2"
W16	8"	1/2"
W18	9"	1/2"
W21	10"	5/8"
W24	12"	5/8"
W27	13"	5/8"
W30	15"	5/8"
W33	16"	5/8"
W36	17"	5/8"

NOTES:

1. PIPE SLEEVES SHALL BE INSTALLED WHERE PLUMBING LINES PENETRATE THE STEEL BEAMS. PROVIDE SLEEVE OPNG PER SCHED IN MIDDLE 1/3 SPAN ONLY.
2. FOR MILTIPLE SLEEVES THE CLEAR OUTSIDE DIMENSION BETWEEN SLEEVES, SHALL BE THE LARGEST SLEEVE DIAMETER.

TYPICAL SLEEVE DETAIL (3 / DB-S792)

SCALE: NTS

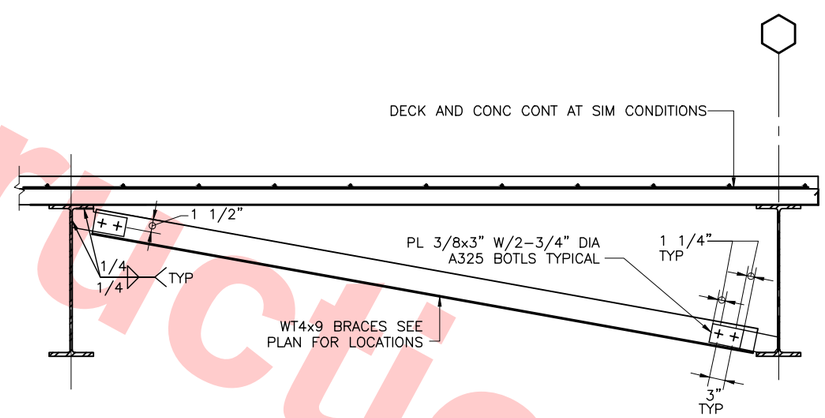

TYPICAL DIAGONAL BRACING (7 / DB-S792)

SCALE: 1"=1'-0"

Santa Clara Valley Transportation Authority

____NO EXCEPTIONS TAKEN (NET)
____MAKE CORRECTIONS NOTED (MCN)
____AMEND AND RESUBMIT (A/R)

Any action shown above is subject to the terms of the contract and does not relieve the Contractor of any of its obligations under the contract, including design and detailing.

Contract No.: DB11002F

By: _____ **Date:** _____

Not For Construction

REV	DATE	BY	SUB	APP	DESCRIPTION
0	20130710				READINESS FOR CONSTRUCTION

DESIGNED BY J. REBER, S.E.
DRAWN BY P. DIAZ
CHECKED BY M. TARAZI
IN CHARGE M. TARAZI
DATE 20130710

PROFESSIONAL ENGINEER SOHAM FUAD # S-3185 EXP. 8/30/14 STRUCTURAL STATE OF CALIFORNIA

Skanska Shimmick Herzog
1436 California Circle
Milpitas, California 95035
A Joint Venture

MFT Consulting Engineers, Inc. 1773 San Pablo Ave., Suite A3 Pinole, CA 94564 (510) 222-4106 Fax (510) 222-4616
SUBMITTED

Lockwood, Andrews & Newnam, Inc. A LAN & BALY COMPANY
T-Y-LIN INTERNATIONAL
APPROVED

BART SILICON VALLEY
BART SILICON VALLEY BERRYESSA EXTENSION

LINE, TRACK, STATIONS AND SYSTEMS
DESIGN UNIT 023
MILPITAS STATION
TYPICAL STEEL
SECTIONS AND DETAILS
SHEET 2 OF 8

CADD FILENAME C700-S-DB-S792.dwg
SIZE D | SCALE AS NOTED
CONTRACT NO. C700 | REV. 0
AREA CODE DB | SHEET NO. S792 | PAGE NO. 0280

cad-02 Jul 05, 2013 - 1:58pm P:\BART Berryessa Extension Line\S - STRUCTURAL MILPITAS\WORK_6-10-2012\C700-S-DB-S792.dwg

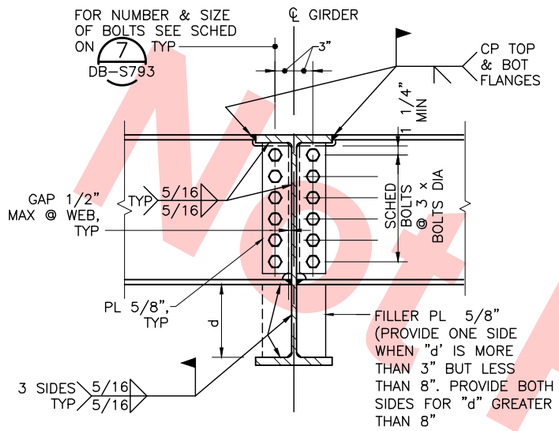

TYPICAL BEAM TO GIRDER MOMENT CONNECTION (1 / DB-S793)

SCALE: 1"=1'-0"

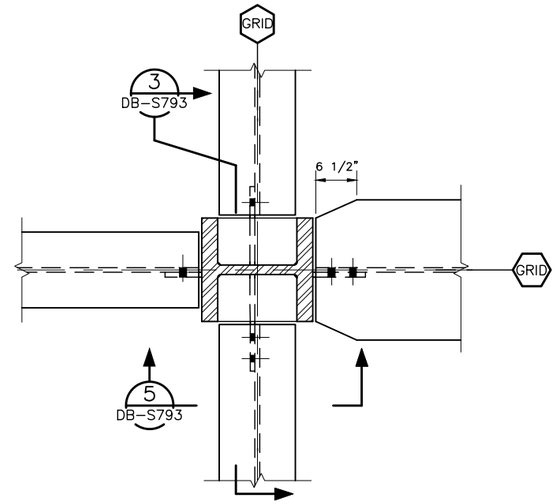

PLAN DETAIL TYPICAL MOMENT CONNECTION (2 / DB-S793)

SCALE: 1"=1'-0"

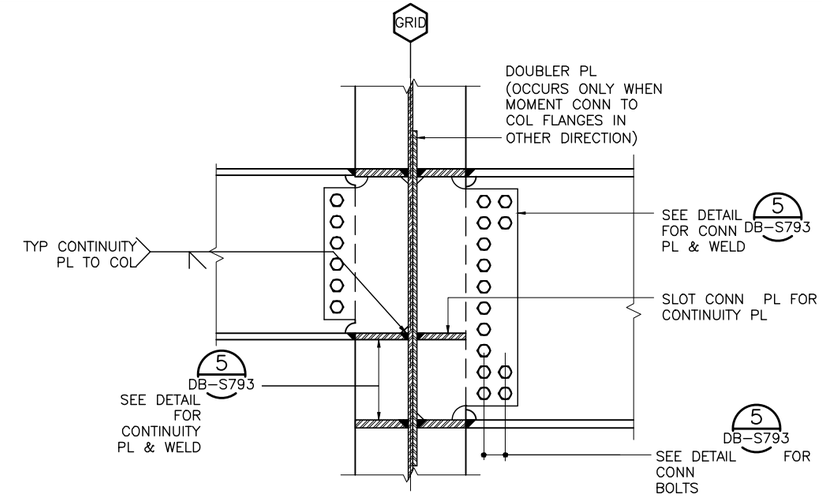

TYPICAL MOMENT CONNECTION—GIRDER TO COLUMN WEB (3 / DB-S793)

SCALE: 1"=1'-0"

Santa Clara Valley Transportation Authority

____NO EXCEPTIONS TAKEN (NET)
____MAKE CORRECTIONS NOTED (MCN)
____AMEND AND RESUBMIT (A/R)

Any action shown above is subject to the terms of the contract and does not relieve the Contractor of any of its obligations under the contract, including design and detailing.

Contract No.: DB11002F

By: _____ Date: _____

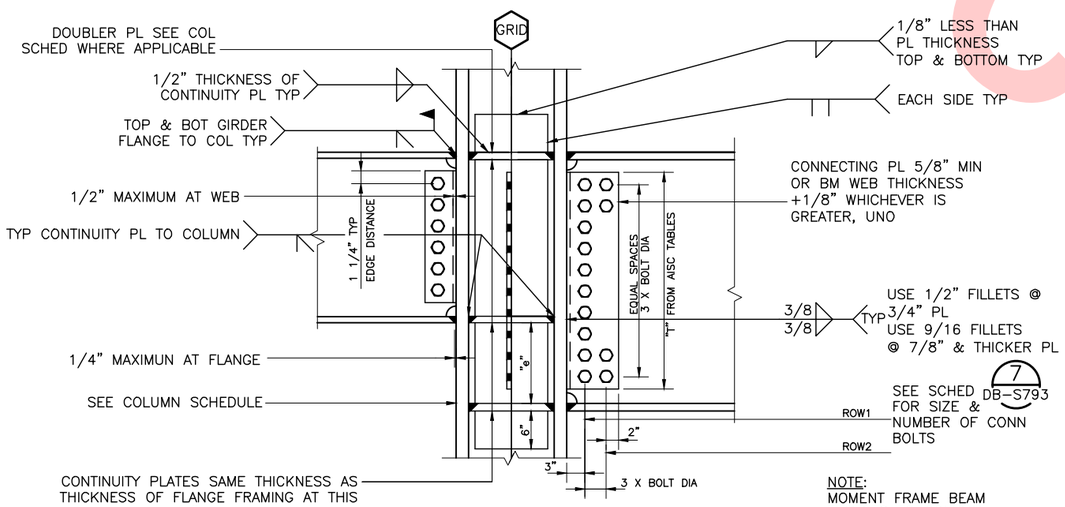

NOTE:
MOMENT FRAME BEAM FLANGES TO COLUMN WELDS SHALL BE MADE BEFORE BOLTS ARE TENSIONED

TYPICAL MOMENT CONNECTION GIRDER TO COLUMN FLANGE (5 / DB-S793)

SCALE: 1"=1'-0"

MAXIMUM SIZE OF GIRDER	NUMBER OF 7/8" BOLT DIAMETER A325X
W36x256	11
W33x367	10
W30x391	9
W27x539	8
W24x370	7
W21x201	6
W18x311	5
W16x100	4
W14x145	3
W12X65	3
W10X112	2

BOLT SCHEDULE FOR MOMENT CONNECTIONS (7 / DB-S793)

SCALE: NTS

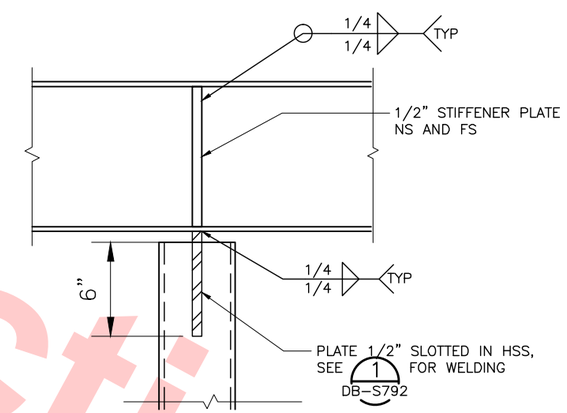

DETAIL (8 / DB-S793)

SCALE: NTS

Not For Construction

REV	DATE	BY	SUB	APP	DESCRIPTION
0	20130710				READINESS FOR CONSTRUCTION

DESIGNED BY J. REBER, S.E.
DRAWN BY P. DIAZ
CHECKED BY M. TARAZI
IN CHARGE M. TARAZI
DATE 20130710

SUBMITTED

Skanska Shimmick Herzog
1436 California Circle
Milpitas, California 95035
A Joint Venture

MFT Consulting Engineers, Inc. Anil Verma Associates, Inc.
1773 San Pablo Ave., Suite A3 (510) 222-4106
Pinole, CA 94564 Fax (510) 222-4410

APPROVED

Lockwood, Andrews & Newnam, Inc. A LEO A DALY COMPANY
T-Y-LIN INTERNATIONAL

BART SILICON VALLEY
BART SILICON VALLEY BERRYESSA EXTENSION

LINE, TRACK, STATIONS AND SYSTEMS
DESIGN UNIT 023
MILPITAS STATION
TYPICAL STEEL
SECTIONS AND DETAILS
SHEET 3 OF 8

CADD FILENAME C700-S-DB-S793.dwg
SIZE D | SCALE AS NOTED
CONTRACT NO. C700 | REV. 0
AREA CODE DB | SHEET NO. S793 | PAGE NO. 0281

cad-02 Jul 05, 2013 – 1:58pm P:\BART Berryessa Extension Line\S – STRUCTURAL MILPITAS\WORK_6-10-2012\C700-S-DB-S793.dwg

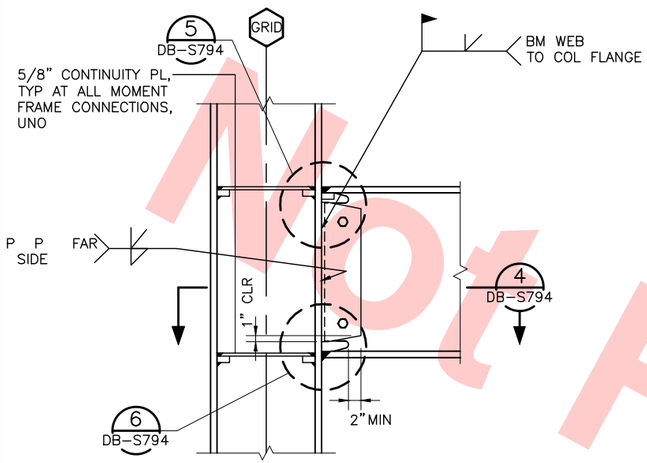

WUF–W MOMENT CONNECTION ONE SIDE (1 / DB–S794)
SCALE: 1"=1'–0"

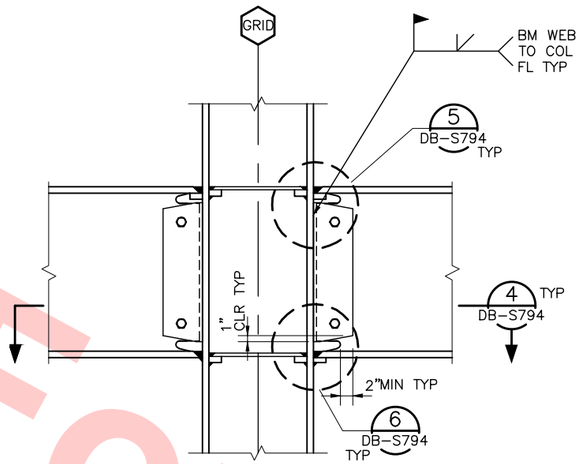

WUF–W MOMENT CONNECTION TWO SIDE (2 / DB–S794)
SCALE: 1"=1'–0"

Santa Clara Valley Transportation Authority

____NO EXCEPTIONS TAKEN (NET)
____MAKE CORRECTIONS NOTED (MCN)
____AMEND AND RESUBMIT (A/R)

Any action shown above is subject to the terms of the contract and does not relieve the Contractor of any of its obligations under the contract, including design and detailing.

Contract No.: DB11002F

By: _____ Date: _____

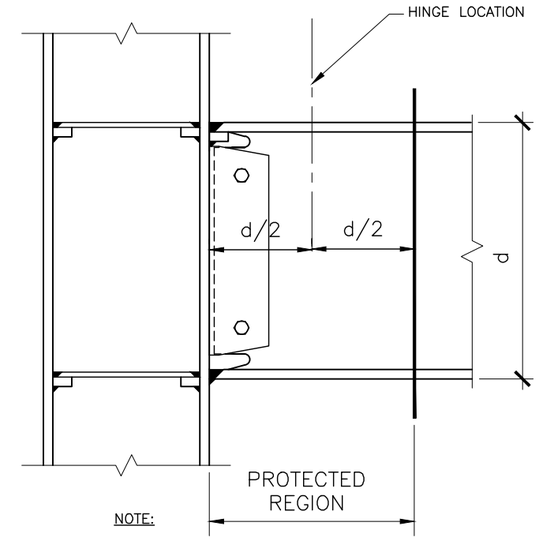

NOTE:

PER SECTION 3.3.3.4 OF FEMA 350, WELDED OR BOLTED ATTACHMENT FOR EXTERIOR FACADES, PARTITIONS, DUCTWORK, PIPING, OR OTHER CONSTRUCTION SHOULD NOT BE PLACED IN THE HINGING AREA OF MOMENT FRAME BEAMS. THE HINGING AREA IS THE PROTECTED REGION LOCATED ONE BEAM DEPTH (d) FROM THE COLUMN FACE.

THIS NOTE IS APPLICABLE TO ALL DRAWINGS.

PROTECTED REGION/HINGING AREA OF WUF–W MOMENT CONNECTION BMS (3 / DB–S794)
SCALE: 1 1/2"=1'–0"

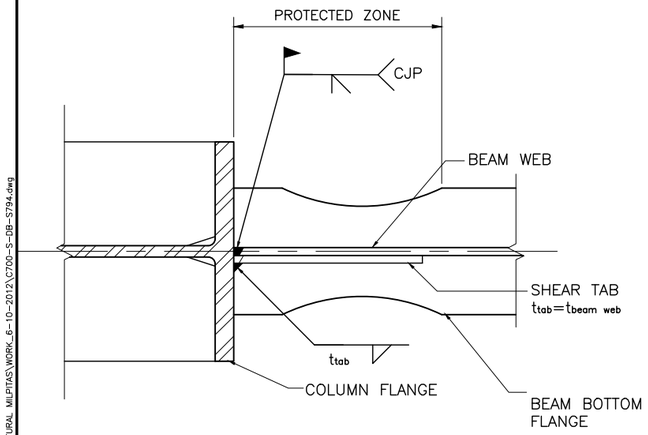

TYPICAL BM. WEB TO COLUMN FLANGE CONNECTION (4 / DB–S794)
SCALE: NTS

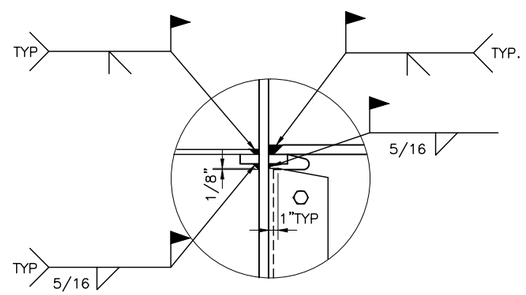

WUF–W MOMENT CONNECTION (5 / DB–S794)
SCALE: 1 1/2"=1'–0"

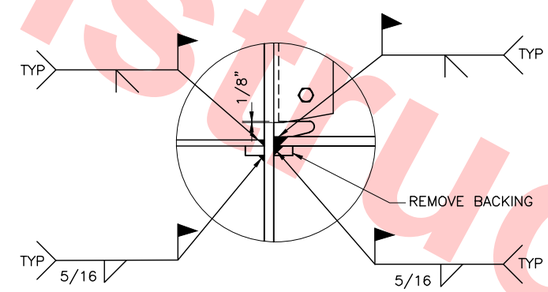

WUF–W MOMENT CONNECTION (6 / DB–S794)
SCALE: 1 1/2"=1'–0"

NOTES:

1. SEE 7/DB–S795 FOR FEMA 350 REQUIREMENTS FOR WUF–W MOMENT CONNECTIONS.
2. USE TWO 1" DIAMETER A307 ERECTION BOLTS IN WUF–W MOMENT CONNECTIONS. REFER TO ITEM 7, DETAIL 7/DB–S795
3. THE WUF–W MOMENT CONNECTIONS SHALL BE COMPLETED, INCLUDING WELDING, PER FEMA 350, FIGURE 3–8 (SHOWN IN 7/DB–S795).

Not For Construction

REV	DATE	BY	SUB	APP	DESCRIPTION
0	20130710				READINESS FOR CONSTRUCTION

DESIGNED BY J. REBER, S.E.
DRAWN BY P. DIAZ
CHECKED BY M. TARAZI
IN CHARGE M. TARAZI
DATE 20130710

PROFESSIONAL ENGINEER SOHAM FUAD PARIKH # S-3185 EXP. 6/30/14 STRUCTURAL STATE OF CALIFORNIA

Skanska Shimmick Herzog
1436 California Circle
Milpitas, California 95035
A Joint Venture

MFT Consulting Engineers, Inc. 1773 San Pablo Ave., Suite A3, Pinole, CA 94564, (510) 222-4106, Fax (510) 222-4418
Anil Verma Associates, Inc.
Leakwood, Andrews & Newnam, Inc. A LAN & BALY COMPANY
T-Y-LIN INTERNATIONAL

SUBMITTED _____ APPROVED _____

BART SILICON VALLEY
BART SILICON VALLEY BERRYESSA EXTENSION

LINE, TRACK, STATIONS AND SYSTEMS
DESIGN UNIT 023
MILPITAS STATION
TYPICAL STEEL
SECTIONS AND DETAILS
SHEET 4 OF 8

CADD FILENAME C700–S–DB–S794.dwg
SIZE D | SCALE AS NOTED
CONTRACT NO. C700 | REV. 0
AREA CODE DB | SHEET NO. S794 | PAGE NO. 0282

cad–02 Jul 05, 2013 – 1:58pm P:\BART Berryessa Extension Line\S – STRUCTURAL MILPITAS\WORK_6–10–2012\C700–S–DB–S794.dwg

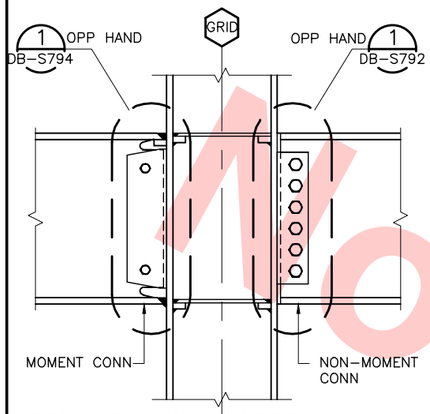

TYP. WUF-W MOMENT CONNECTION AND NON-MOMENT CONN. (1 / DB-S795)

SCALE: 1"=1'-0"

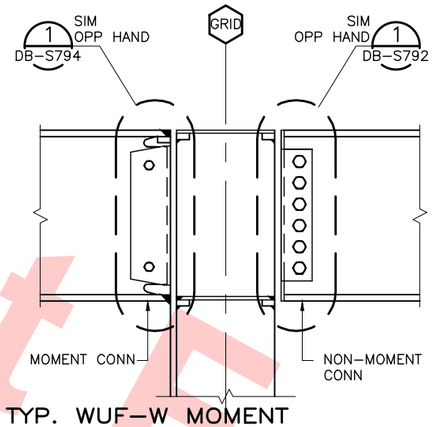

TYP. WUF-W MOMENT CONNECTION AND NON-MOMENT CONN. AT TOP COLUMN (2 / DB-S795)

SCALE: 1"=1'-0"

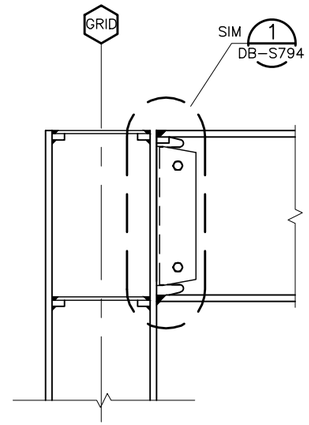

TYPICAL WUF-W MOMENT CONN. AT TOP OF COL. ONE SIDE (3 / DB-S795)

SCALE: 1"=1'-0"

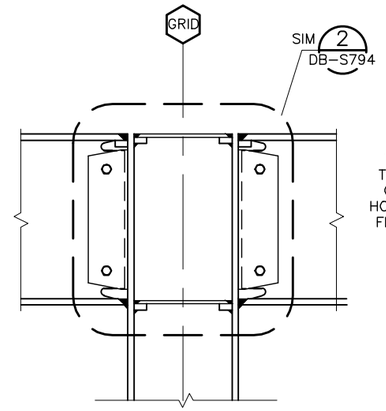

TYPICAL WUF-W MOMENT CONN. AT TOP OF COL. TWO SIDES (4 / DB-S795)

SCALE: 1"=1'-0"

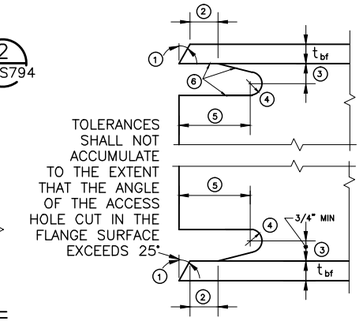

NOTES:

1. BEVEL AS REQUIRED BY AWS DI.I FOR SELECTED GROOVE WELD PROCEDURE.
2. LARGER OF t_{bf} OR $\frac{1}{2}$". (PLUS $\frac{1}{2}$ t_{bf} , OR MINUS $\frac{1}{4}$ t_{bf})
3. $\frac{3}{4}$ t_{bf} TO t_{bf} , $\frac{3}{4}$" MINIMUM ($\pm$ $\frac{1}{4}$ INCH)
4. $\frac{3}{8}$" MINIMUM RADIUS (PLUS NOT LIMITED, OR MINUS 0)
5. 3 t_{bf} . ($\pm$ $\frac{1}{2}$ INCH)
6. SEE FEMA-353, RECOMMENDED SPECIFICATIONS AND QUAILTY ASSURANCE GUIDELINES FOR STEEL MOMENT-FRAME CONSTRUCTION FOR SEISMIC APPLICATIONS, FOR FABRICATION DETAILS INCLUDING CUTTING METHODS AND SMOOTHNESS REQUIREMENTS.

FEMA 350, RECOMENDED WELD ACCESS HOLE DETAIL (5 / DB-S795)

SCALE: NTS

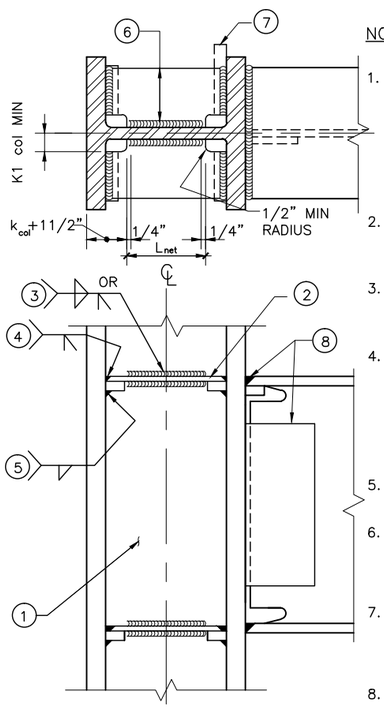

NOTES:

1. WEB DOUBLER PLATE WHERE REQUIRED BY SECTION 3.3.3.2. OF FEMA 350 SEE 2005 AISC SEISMIC PROVISIONS SECTION 9.3c, COMMENTARY C9.3, AND FIGURES C-I-9.2 AND C-I-9.3 FOR OPTIONS AND CONNECTION REQUIREMENTS. WELD QC/QA CATEGORY BL/L FOR ALL WELDS.
2. CONTINUITY PLATE SHALL BE EQUAL TO THICKEST OF BEAM FLANGE + 1/4" BUT NOT LESS THAN 3/4"
3. REQUIRED TOTAL WELD STRENGTH = $0.6t_{pl}(L_{net})F_{y\,pl}$. QC/QA CATEGORY BL/L.
4. CJP TYPICAL. QC/QA CATEGORY BM/T. FOR EXTERIOR BEAN-COLUMN CONNECTIONS (BEAM ONE SIDE ONLY), WELD OF CONTINUITY PLATE TO COLUMN FLANGE AT FREE SIDE MAY BE FILLET WELDS AT TOP AND BOTTOM FACE OF PLATE.
5. AISC MINIMUM CONTINUOUS FILLET WELD UNDER BACKING.
6. MINIMUM WIDTH TO MATCH BEAM FLANGE. PREFERRED ALTERNATIVE: EXTEND PLATE FLUSH WITH COLUMN FLANGES.
7. REMOVE WELD TABS TO 1/4" MAXIMUM FROM EDGE OF CONTINUITY PLATE. GRIND END OF WELD SMOOTH (500 μ-in), NOT FLUSH. DO NOT GOUGE COLUMN FLANGE.
8. BEAM CONNECTION, SEE DETAIL 7, THIS SHEET

FEMA 350, RECOMMENDED TYPICAL CONTINUITY AND DOUBLER PLATES (6 / DB-S795)

SCALE: NTS

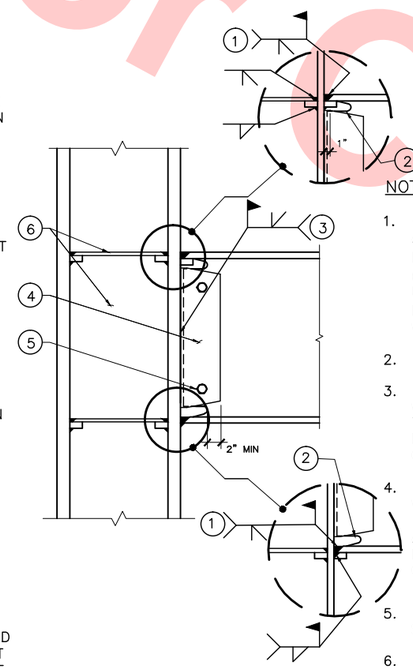

NOTES:

1. CJP GROOVE WELD AT TOP AND BOTTOM FLANGES. AT TOP FLANGE, EITHER (1) REMOVE WELD BACKING, BACKGOUGE, AND ADD $\frac{5}{16}$" MINIMUM FILLETWELD, OR (2) LEAVE BACKING IN PLACE AND ADD $\frac{5}{16}$" FILLET UNDER BACKING. AT BOTTOM FLANGE, REMOVE WELD BACKING, BACKGOUGE, AND ADD $\frac{5}{16}$" MINIMUM FILLET WELD. WELD: QC/QA CATEGORY AH/T.
2. FOR WELD ACCESS HOLE, SEE DETAIL 5, THIS SHEET.
3. CJP GROOVE WELD FULL LENGTH OF WEB BETWEEN WELD ACCESS HOLES. PROVIDE NON-FUSIBLE WELD TABS. REMOVE WELD TABS AFTER WELDING AND GRIND END OF WELD SMOOTH AT WELD ACCESS HOLE. WELD: QC/QA CATEGORY BH/T.
4. SHEAR TAB OF THICKNESS EQUAL TO THAT OF BEAM WEB. SHEAR TAB LENGTH SHALL BE SO AS TO ALLOW 1/8" OVERLAP WITH THE WELD ACCESS HOLE AT TOP AND BOTTOM, AND THE WIDTH SHALL EXTEND 2" MINIMUM BACK ALONG THE BEAM, BEYOND THE END OF THE WELD ACCESS HOLE.
5. ERECTION BOLTS: NUMBER, TYPE, AND SIZE SELECTED FOR ERECTION LOADS.
6. FOR CONTINUITY PLATES AND WEB DOUBLER PLATES SEE DETAIL 6, THIS SHEET.

FEMA 350, RECOMMENDED WELDED UNREINFORCED FLANGE-WELDED (WUF-W) CONNECTION (7 / DB-S795)

SCALE: NTS

Santa Clara Valley Transportation Authority

____NO EXCEPTIONS TAKEN (NET)
____MAKE CORRECTIONS NOTED (MCN)
____AMEND AND RESUBMIT (A/R)

Any action shown above is subject to the terms of the contract and does not relieve the Contractor of any of its obligations under the contract, including design and detailing.

Contract No.: DB11002F

By: _____ Date: _____

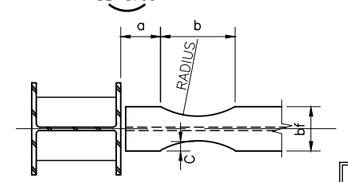

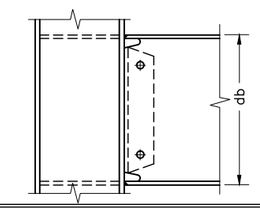

RBS DIMENSIONAL DETERMINATION

a =	0.6	bf
b =	0.750	db
c =	0.1	bf
RADIUS =	$\frac{4c^2+b^2}{8c}$	

NOTES:

1. NO HOLES MAY BE DRILLED OR PUNCHED IN EITHER FLANGE OF THE BEAM WITHIN THE LENGTH THAT HAS RECEIVED THE RADIUS CUT, OR BETWEEN THE RBS CUT AND THE COLUMN. SHEAR STUDS AND MECAHNICAL DECK FASTENER TO THE BEAM FLANGE WITHIN THE LENGTH OF THE RADIUS CUT ARE PROHIBITED.
2. THE TOLERANCE ON THE DEPTH OF EACH RBS CUT IS PLUS OR MINUS 1/4 INCH. THE LENGTH OF THE CUT SHALL BE WITHIN PLUS OR MINUS 15% OF THE SPECIFIED LENGTH. THE DEPTH OF CUT IN EACH SIDE SHALL BE BALANCED, WITH NO MORE THAN 3/8 INCH TOTAL VARIATION IN DEPTH OF CUT FROM ONE SIDE TO THE OTHER. (EXAMPLE: PLUS 1/8 INCH IN ONE SIDE, MINUS 1/4 INCH ON THE OTHER SIDE) THE BALANCE OF REMAINING SIDE FLANGE WIDTH ABOUT THE WEB OF THE BEAMS IS NOT A CONSIDERATION
3. AFTER THERMAL CUTTING, THE RBS SURFACE SHALL HAVE A SURFACE ROUGHNESS OF NO MORE THAN 500 MICROINCHES (AWS SAMPLE 3). GRINDING ON THERMALLY CUT EDGES SHALL BE PROVIDED ONLY AS NECESSARY TO MEET THIS CRITERIA. (GRINDING SHALL ONLY BE IN THE DIRECTION OF THE FLANGE LENGTH). CORNERS BETWEEN THE CUT RBS SURFACE AND THE TOP AND BOTTOM OF THE FLANGES SHALL BE GROUND TO REMOVE SHARP EDGES, BUT A MINIMUM RADIUS OR CHAMFER IS NOT REQUIRED.
4. GOUGES AND NOTCHES THAT OCCUR IN THERMAL CUT RBS SURFACE MAY BE REPAIRED BY GRINDING IF NOT MORE THAN 1/4 INCH DEEP. THE GOUGED OR NOTCHED AREA SHALL BE FAIRED BY GRINDING SO THAT A SMOOTH TRANSITION EXISTS, AND THE TOTAL LENGTH OF THE AREA GROUND FOR THE TRANSITION SHALL BE NO LESS THAN 10 TIMES THE DEPTH OF THE REMOVED GOUGE. IF A SHARP NOTCH EXIST, THE AREA SHALL BE INSPECTED BY MT AFTER GRINDING TO ENSURE THAT ENTIRE DEPTH OF GOUGE OR NOTCH HAS BEEN REMOVED. GRINDING MAY NOT INCREASE THE DEPTH OF THE RBS CUT SECTION MORE THAN 1/4 INCH BEYOND THE SPECIFIED DEPTH OF CUT.
5. GOUGES AND NOTCHES THAT EXCEED 1/4 INCH IN DEPTH, BUT NOT TO EXCEED 1/2 INCH INDEPTH, AND THOSE NOTCHES AND GOUGES WHERE REPAIR BY GRINDING WOULD INCREASE THE EFFECTIVE DEPTH OF THE RBS CUT BEYOND TOLERANCE, MAY BE REPAIRED BY WELDING. NOTCHES AND GOUGES EXCEEDING 1/2 INCH IN DEPTH MAY BE REPAIRED ONLY WITH THE APPROVAL OF ENGINEER. THE NOTCH OR GOUGE SHALL BE REMOVED AND GROUND TO PROVIDE A SMOOTH RADIUS OF NOT LESS THAN 3/8 INCH FOR WELDING. THE REPAIR AREA SHALL BE PREHEATED TO A TEMPERATURE BETW'N 400°F AND 500°F, MEASURED AT THE LOCATION OF THE WELD REPAIR APPROXIMATELY ONE MINUTE AFTER REMOVAL OF THE HEATING SOURCE. REPAIR WELDING SHALL BE DONE WITH NOTCH-TOUGH ELECTRODES MEETING THE REQUIREMENTS IN FEMA 353 (JULY 2000) PART I, SECTION 2.4. A REPAIR WPS IS REQUIRED. FOLLOWING WELDING, THE REPAIR WELD WILL BE GROUND TO A SMOOTH CONTOUR MEETING THE RBS REQUIREMENTS, WITH A SURFACE ROUGHNESS NOT TO EXCEED 500 MICROINCHES. THE WELDED REPAIR AREA SHALL BE INSPECTED USING MAGNETIC PARTICLE TESTING.
6. WELDED DECK STUDS, BEAM PIPE HANGERS, EXTERIOR SUPPORT, ETC. SHALL NOT OCCUR WITHIN THE AREA OF THE BEAM FLANGE BETWEEN THE COLUMN FACE AND 6" BEYOND THE EXTREME END OF THE RBS.

REDUCED BEAM SECTON NOTES (11 / DB-S795)

SCALE: NTS

Not For Construction

REV	DATE	BY	SUB	APP	DESCRIPTION
0	20130710				READINESS FOR CONSTRUCTION

DESIGNED BY J. REBER, S.E.
DRAWN BY P. DIAZ
CHECKED BY M. TARAZI
IN CHARGE M. TARAZI
DATE 20130710

REGISTERED PROFESSIONAL ENGINEER — SOHAIL FIAZ — # S-3185 EXP.6/30/14 — STRUCTURAL — STATE OF CALIFORNIA

Skanska Shimmick Herzog
1436 California Circle
Milpitas, California 95035
A Joint Venture

MFT Consulting Engineers, Inc. Anil Verma Associates, Inc.
1773 San Pablo Ave., Suite A3 (510) 222-4106
Pinole, CA 94564 Fax (510) 222-4618

SUBMITTED

Lockwood, Andrews & Newnam, Inc. — A LAN A RAY COMPANY
T·Y·LIN INTERNATIONAL

APPROVED

BART SILICON VALLEY BERRYESSA EXTENSION

LINE, TRACK, STATIONS AND SYSTEMS
DESIGN UNIT 023
MILPITAS STATION
TYPICAL STEEL
SECTIONS AND DETAILS
SHEET 5 OF 8

CADD FILENAME C700-S-DB-S795.dwg
SIZE D | SCALE AS NOTED
CONTRACT NO. C700 | REV. 0
AREA CODE DB | SHEET NO. S795 | PAGE NO. 0283

cad-02 Jul 05, 2013 - 1:58pm P:\BART Berryessa Extension Line\S - STRUCTURAL, MILPITAS\WORK_6-10-2012\C700-S-DB-S795.dwg

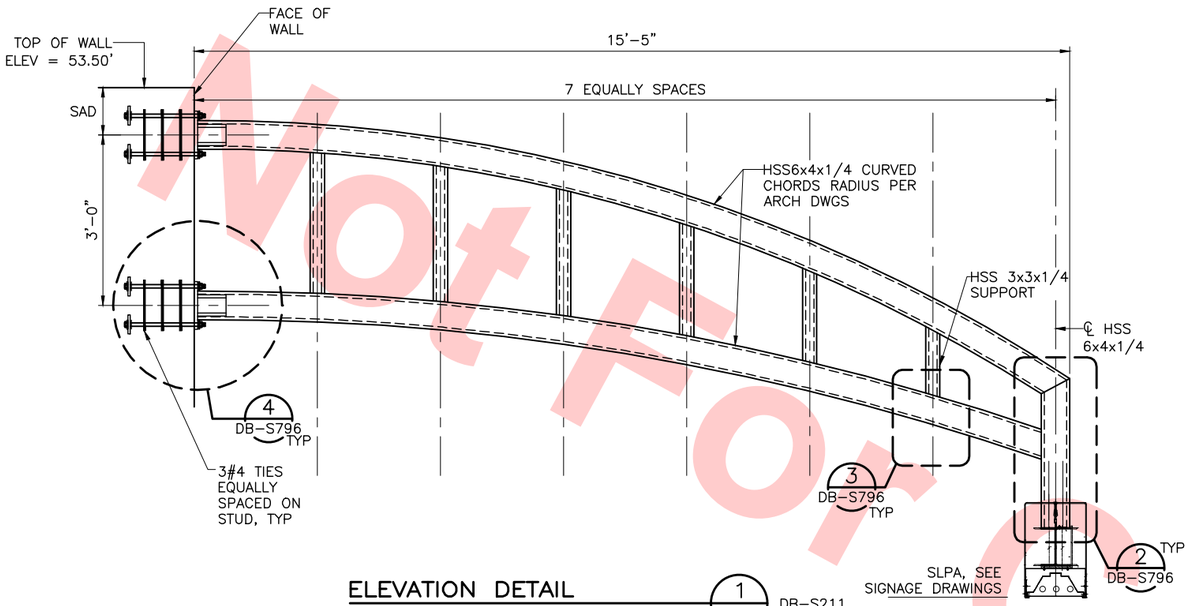

ELEVATION DETAIL
SCALE: 3/4"=1'-0"
1 DB-S796 DB-S211

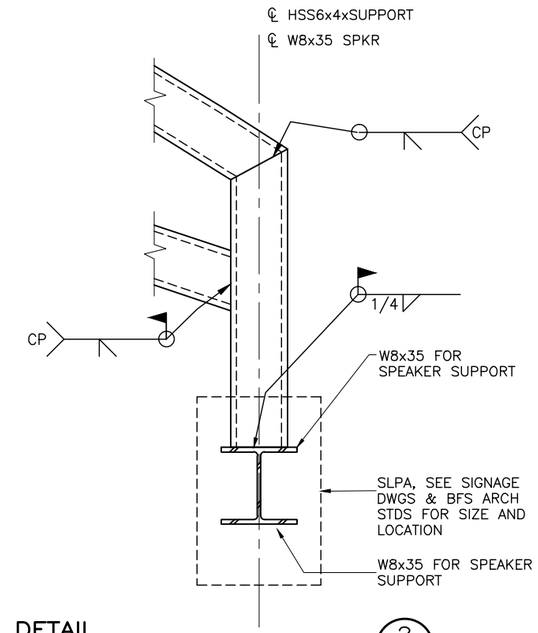

DETAIL
SCALE: 1 1/2"=1'-0"
2 DB-S796 DC-S796

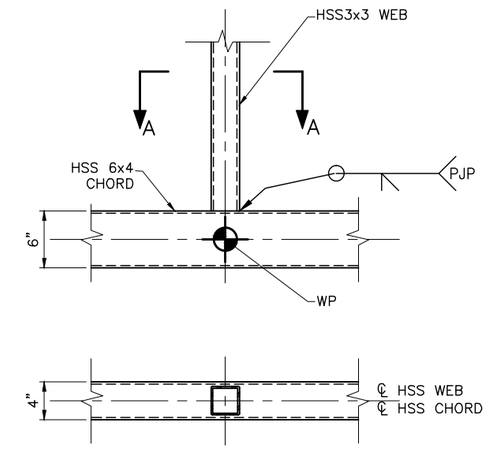

SECTION A-A

SECTION AND PLAN
SCALE: 1 1/2"=1'-0"
3 DB-S796 DB-S796

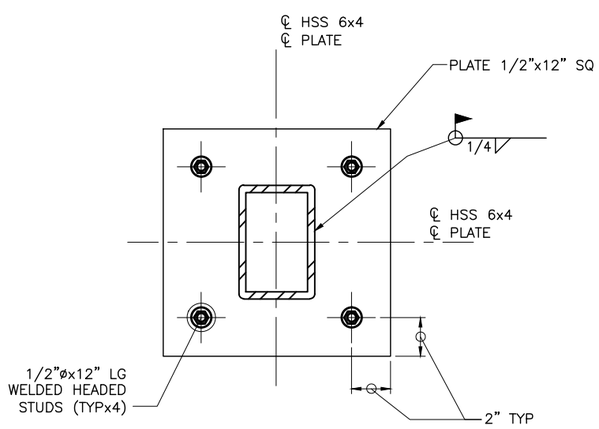

ELEVATION DETAIL
SCALE: 3"=1'-0"
4 DB-S796 DB-S796

Santa Clara Valley Transportation Authority

____NO EXCEPTIONS TAKEN (NET)
____MAKE CORRECTIONS NOTED (MCN)
____AMEND AND RESUBMIT (A/R)

Any action shown above is subject to the terms of the contract and does not relieve the Contractor of any of its obligations under the contract, including design and detailing.

Contract No.: DB11002F

By: _____ Date: _____

Not For Construction

REV	DATE	BY	SUB	APP	DESCRIPTION
0	20130710				READINESS FOR CONSTRUCTION
0	20130531				READINESS FOR CONSTRUCTION

DESIGNED BY C. BRADBURY
DRAWN BY P. DIAZ
CHECKED BY M. TARAZI
IN CHARGE M. TARAZI
DATE 20130710

REGISTERED PROFESSIONAL ENGINEER SOHAIL FUAD VERMA S-3185 EXP. 6/30/14 STRUCTURAL STATE OF CALIFORNIA

Skanska Shimmick Herzog
1436 California Circle
Milpitas, California 95035
A Joint Venture

MFT CONSULTING ENGINEERS, INC. Anil Verma Associates, Inc.
1773 San Pablo Ave., Suite A3 (510) 222-4106
Pinole, CA 94564 Fax (510) 222-4110
SUBMITTED

Lockwood, Andrews & Newnam, Inc. A LEO A DALY COMPANY
T-Y-LIN INTERNATIONAL
APPROVED

BART SILICON VALLEY
BART SILICON VALLEY BERRYESSA EXTENSION

LINE, TRACK, STATIONS AND SYSTEMS
DESIGN UNIT 023
MILPITAS STATION
TYPICAL STEEL
SECTIONS AND DETAILS
SHEET 6 OF 8

CADD FILENAME C700-S-DB-S796.dwg
SIZE D | SCALE AS NOTED
CONTRACT NO. C700 | REV. 0
AREA CODE DB | SHEET NO. S796 | PAGE NO. 0284

cad-02 Jul 05, 2013 - 1:58pm P:\BART Berryessa Extension Line\S - STRUCTURAL MILPITAS\WORK_6-10-2012\C700-S-DB-S796.dwg

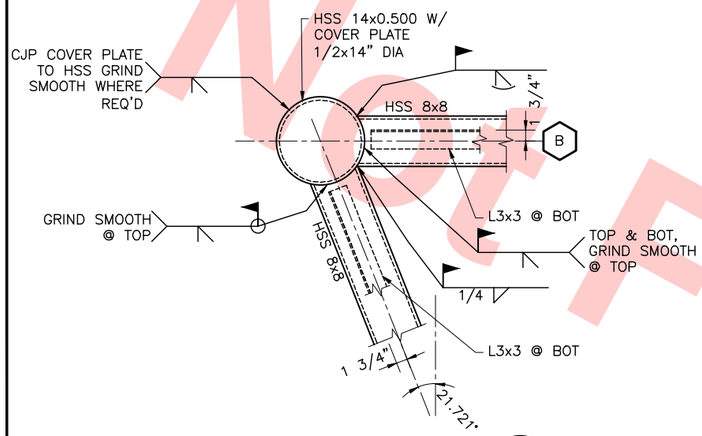

PLAN DETAIL 1 DB-S798 DB-S147
SCALE: 1"=1'-0"

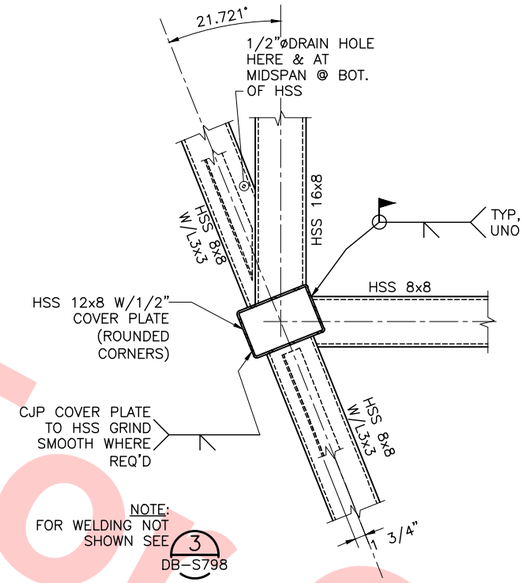

PLAN DETAIL 2 DB-S798 DB-S147
SCALE: 1"=1'-0"

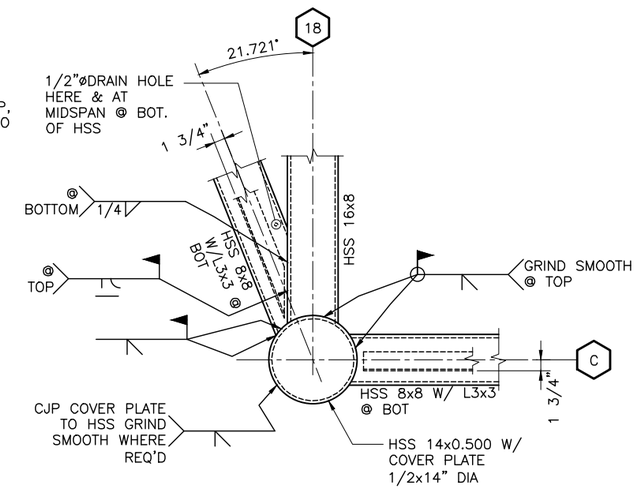

PLAN DETAIL 3 DB-S798 DB-S147
SCALE: 1"=1'-0"

Not For Construction

Santa Clara Valley Transportation Authority

____NO EXCEPTIONS TAKEN (NET)
____MAKE CORRECTIONS NOTED (MCN)
____AMEND AND RESUBMIT (A/R)

Any action shown above is subject to the terms of the contract and does not relieve the Contractor of any of its obligations under the contract, including design and detailing.

Contract No.: DB11002F

By: _____ Date: _____

REV	DATE	BY	SUB	APP	DESCRIPTION
0	20130710				READINESS FOR CONSTRUCTION

DESIGNED BY C. BRADBURY
DRAWN BY P. DIAZ
CHECKED BY M. TARAZI
IN CHARGE M. TARAZI
DATE 20130710

REGISTERED PROFESSIONAL ENGINEER SOHAIL FUAD VERMA # S-3185 EXP. 6/30/14 STRUCTURAL STATE OF CALIFORNIA

Skanska Shimmick Herzog
1436 California Circle
Milpitas, California 95035
A Joint Venture

MFT CONSULTING ENGINEERS, INC. Anil Verma Associates, Inc.
1773 San Pablo Ave., Suite A3 (510) 222-4106
Pinole, CA 94564 Fax (510) 222-4110
SUBMITTED

Lockwood, Andrews & Newnam, Inc. A LEO A DALY COMPANY
T·Y·LIN INTERNATIONAL
APPROVED

BART SILICON VALLEY
BART SILICON VALLEY BERRYESSA EXTENSION

LINE, TRACK, STATIONS AND SYSTEMS
DESIGN UNIT 023
MILPITAS STATION
TYPICAL STEEL
SECTIONS AND DETAILS
SHEET 7 OF 8

CADD FILENAME C700-S-DB-S798.dwg
SIZE D SCALE 1" =1'-0"
CONTRACT NO. C700 REV. 0
AREA CODE DB SHEET NO. S798 PAGE NO. 0285

cad-02 Jul 05, 2013 - 1:58pm P:\BART Berryessa Extension Line\S - STRUCTURAL MILPITAS\WORK_6-10-2012\C700-S-DB-S798.dwg

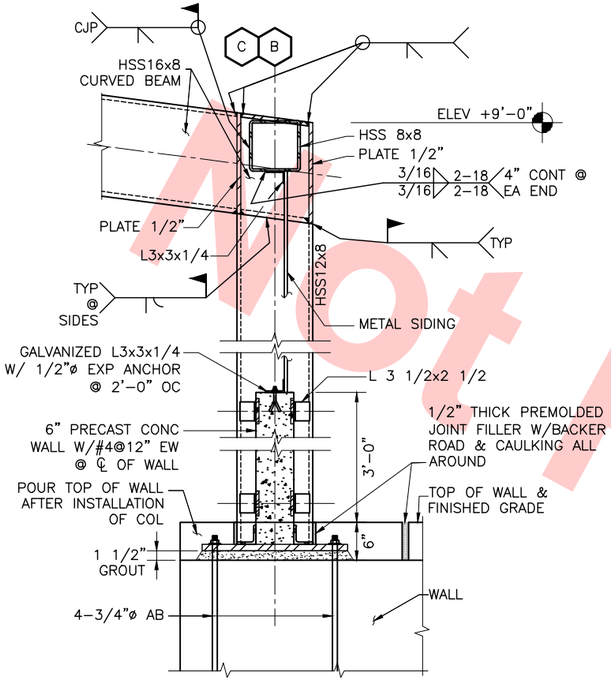

NOTE:
ERECT STRUCTURAL STEEL FRAMING AFTER BACKFILL OF RETAINING WALL

BIRD SCREEN ELEVATION DETAIL

SCALE: 1"=1'-0"

1 DB-S799 — DB-S127, DB-S128, DB-S147, DB-S148, DB-S211

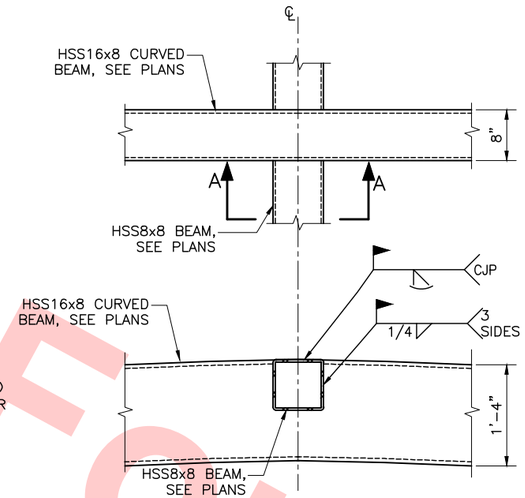

SECTION A-A

ELEVATION & SECTION DETAIL

SCALE: 1"=1'-0"

2 DB-S799 — DB-S127, DB-S128, DB-S147, DB-S148, DB-S211

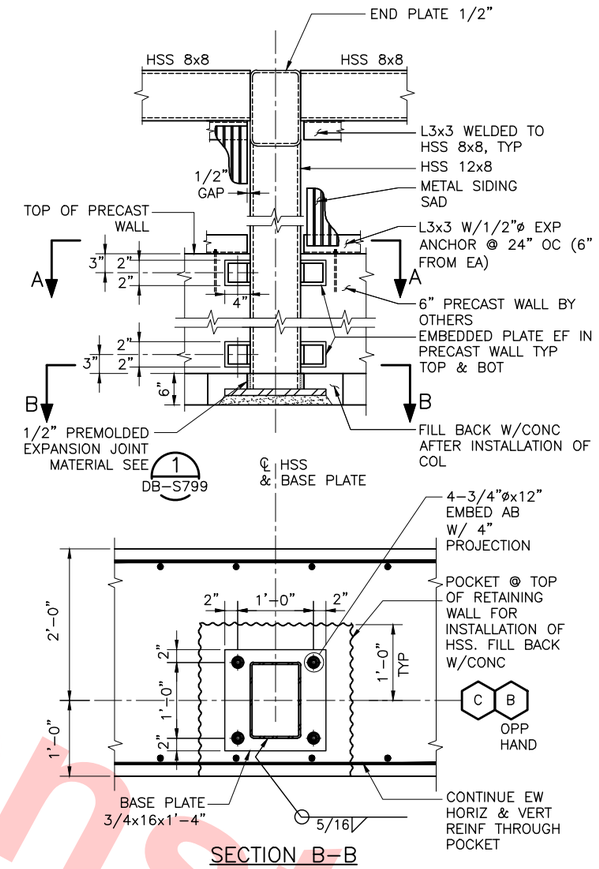

SECTION B-B

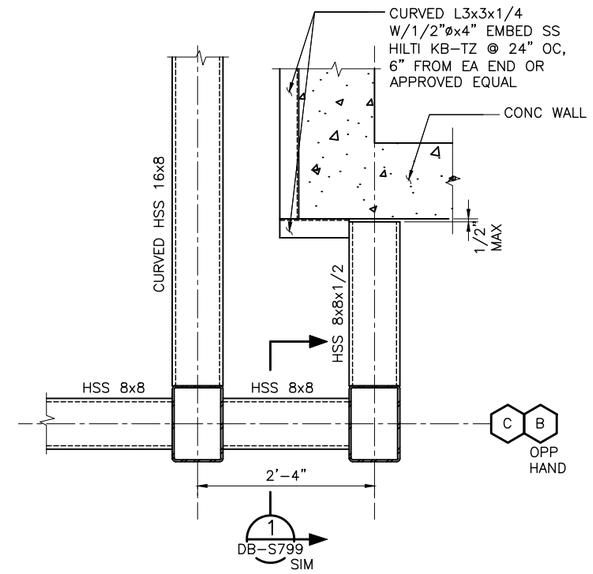

BIRD FRAME AT SOUTH END PLAN DETAIL

SCALE: 1"=1'-0"

4 DB-S799 — DB-S128, DB-S147, DB-S148

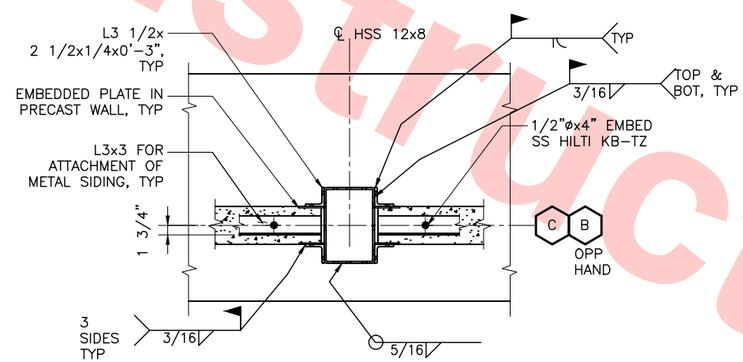

SECTION A-A

DETAIL SECTION AND PLAN

SCALE: 1"=1'-0"

3 DB-S799 — DB-S127, DB-S128, DB-S147, DB-S148, DB-S211

Santa Clara Valley Transportation Authority

____NO EXCEPTIONS TAKEN (NET)
____MAKE CORRECTIONS NOTED (MCN)
____AMEND AND RESUBMIT (A/R)

Any action shown above is subject to the terms of the contract and does not relieve the Contractor of any of its obligations under the contract, including design and detailing.

Contract No.: DB11002F

By: _____ Date: _____

Not For Construction

REV	DATE	BY	SUB	APP	DESCRIPTION
0	20130710				READINESS FOR CONSTRUCTION

DESIGNED BY C. BRADBURY
DRAWN BY P. DIAZ
CHECKED BY M. TARAZI
IN CHARGE M. TARAZI
DATE 20130710

REGISTERED PROFESSIONAL ENGINEER SOHAIL FUAD TAYEH # S-5185 EXP. 6/30/14 STRUCTURAL STATE OF CALIFORNIA

Skanska Shimmick Herzog
1436 California Circle Milpitas, California 95035
A Joint Venture

MFT Consulting Engineers, Inc. Anil Verma Associates, Inc. 1773 San Pablo Ave., Suite A3 Pinole, CA 94564 (510) 222-4106 Fax (510) 222-4116
SUBMITTED

Lockwood, Andrews & Newnam, Inc. A LEO A DALY COMPANY
T-Y-LIN INTERNATIONAL
APPROVED

BART SILICON VALLEY
BART SILICON VALLEY BERRYESSA EXTENSION

LINE, TRACK, STATIONS AND SYSTEMS
DESIGN UNIT 023
MILPITAS STATION
TYPICAL STEEL
SECTIONS AND DETAILS
SHEET 8 OF 8

CADD FILENAME C700-S-DB-S799.dwg
SIZE D | SCALE 1" = 1'-0"
CONTRACT NO. C700 | REV. 0
AREA CODE DB | SHEET NO. S799 | PAGE NO. 0286

cad-02 Jul 05, 2013 - 1:58pm P:\BART Berryessa Extension Line\S - STRUCTURAL MILPITAS\WORK_6-10-2012\C700-S-DB-S799.dwg

GENERAL NOTES FOR ANCILLARY BUILDING

1. INTENT OF DRAWINGS

   A. THE GENERAL NOTES APPLY TO ALL STRUCTURAL WORK EXCEPT WHERE THEY CONFLICT WITH DETAILS AND NOTES SPECIFICALLY SHOWN AND NOTED.

   B. ITEMS IN THE CONSTRUCTION SPECIFICATIONS, BUT NOT SHOWN ON THE DRAWINGS, SHALL BE CONSIDERED AS BEING PART OF THE DRAWINGS.

   C. RESOLVE ALL CONFLICTS AND AMBIGUITIES ON THE PLANS AND SPECIFICATIONS WITH THE VTA BEFORE PROCEEDING WITH CONSTRUCTION.

   D. ALL REQUIRED DETAILS OR DIMENSIONS NOT SHOWN SPECIFICALLY SHALL BE OF SIMILAR CHARACTER AS SHOWN FOR SIMILAR CONDITIONS.

   E. THE STRUCTURAL DRAWINGS SHOW ONLY A PRELIMINARY DESIGN. THE DB CONTRACTOR SHALL REVIEW AND FINALIZE THE DESIGN AND STRUCTURAL DRAWINGS. REFER TO ARCHITECTURAL, CIVIL, MECHANICAL, ELECTRICAL AND COMMUNICATIONS/SYSTEMS DRAWINGS FOR ITEMS WHICH REQUIRE COORDINATION DURING THE DESIGN AND CONSTRUCTION OF THE STRUCTURE.

2. BASIS OF DESIGN

   A. BART FACILITIES STANDARDS (BFS), RELEASE 2.1A

   B. BART FACILITIES DESIGN GUIDELINES, RELEASE 2.1A

   C. BART FACILITIES DESIGN CRITERIA, RELEASE 2.1A

   D. BART STANDARD PLANS, RELEASE 2.1A

   E. BART FACILITIES SPECIFICATIONS, RELEASE 2.1A

   F. BUILDING CODE REQUIREMENTS FOR MASONRY STRUCTURES, ACI 530-05/ASCE 6-05/TMS 602-05

   G. CALIFORNIA BUILDING CODE, 2010

   H. AMERICAN CONCRETE INSTITUTE, BUILDING CODE AND COMMENTARY, 318-05

   I. AMERICAN INSTITUTE OF STEEL CONSTRUCTION, MANUAL OF STEEL CONSTRUCTION, 13th EDITION.

   J. AMERICAN WELDING SOCIETY: ANSI/AWS D1.1 2004

3. EXISTING CONDTIIONS

   THE CONTRACTOR SHALL FIELD VERIFY EXISTING CONDITIONS PERTINENT TO THE WORK PRIOR TO MATERIAL FABRICATION AND/OR CONSTRUCTION. FIELD CONDITIONS DIFFERENT FROM THOSE NOTED ON THE CONSTRUCTION DRAWINGS SHALL BE PROMPTLY BROUGHT TO THE ATTENTION OF THE VTA. ITEMS TO BE FIELD VERIFIED INCLUDE BUT ARE NOT LIMITED TO:

   A. LOCATION, DIMENSIONS, AND ELEVATIONS OF EXISTING STRUCTURES, STRUCTURAL ELEMENTS, EQUIPMENT AND UTILITIES, WHICH HAVE BEEN SHOWN AS REFERENCE ON THE DRAWINGS AND MAY AFFECT NEW CONSTRUCTION.

   B. HORIZONTAL AND VERTICAL CLEARANCES.

   C. HORIZONTAL AND VERTICAL TIE-IN POINTS.

4. DESIGN LOADS

   A. ROOF DEAD LOAD = 17 PSF

   B. ROOF LIVE LOAD = 20 PSF (REDUCIBLE)

   C. WIND LOAD
      - WIND SPEED = 85 MPH
      - EXPOSURE = C
      - IMPORTANCE FACTOR = 1.15

   D. SEISMIC LOAD
      - REDUNDANCE FACTOR = 85 MPH
      - IMPORTANCE FACTOR = 1.25
      - SEISMIC DESIGN CATEGORY = C

5. MATERIAL STRENGTHS:

   A. CONCRETE:
      1. f'c = 3,000 PSI (TYPICAL)
      2. f'c = 60,000 PSI

   B. MASONRY:
      1. f'm = 1,500 PSI
      2. f'g = 2,500 PSI
      3. fy = 60,000 PSI

   C. STRUCTURAL STEEL:
      1. WF AND WT SHAPES, ASTM A992 GRADE 50
      2. C, MC, L AND 2L SHAPES, ASTM A36
      3. HSS SHAPES, ASTM A500 GRADE B

REINFORCED MASONRY NOTES:

A. CONCRETE MASONRY UNITS (CMU) SHALL CONFORM TO ASCM C90.

B. ALL MORTAR MATERIALS SHALL CONFORM TO ASTM C 270.

C. TYPE M OR S GROUT SHALL CONFORM TO ASTM C476.

D. ALL CELLS IN CONCRETE BLOCK CONSTRUCTION SHALL BE GROUTED SOLID.

E. CONCRETE BLOCK CONSTRUCTION SHALL BE RUNNING BOND WITH OPEN ENDED BLOCKS.

F. CONTINOUS INSPECTION IS REQUIRED DURING CONSTRUCTION OF MASONRY.

G. ALL BOLTS EMBEDDED IN CONCRETE BLOCK SHALL HAVE A MINIMUM OF 1" OF GROUT BETWEEN THE BOLT AND THE CONCRET BLOCK ON ALL SIDES.

STRUCTURAL LEGEND:

	INDICATES OPENING
	INDICATES BLOCKOUT
6"	INDICATES GRADE BREAK
	INDICATES CMU WALL
	INDICATES DIRECTION OF RIBS IN METAL DECK
-1%	INDICATES CROSS SLOPE
	INDICATES SLOPED SURFACE
BF-1	INDICATES BRACED FRAME
W24x	INDICATES STRUCTURAL STEEL WIDE FLANGE BEAM AND SIZE
COL	INDICATES STRUCTURAL STEEL COLUMN
	INDICATES BRACE DIRECTION
L3x3x	INDICATES STRUCTURAL STEEL ANGLE AND SIZE
DO	INDICATES BEAM IDENTICAL TO ADJACENT MEMBER

STRUCTURAL ABBREVIATIONS:

BFS	BART FACILITY STANDARDS
BTWN	BETWEEN
℄	CENTERLINE
CIP	CAST-IN-PLACE
CMU	CONCRETE MASONRY UNIT
EQ	EQUAL
EW	EACH WAY
f'c	SPECIFIED COMPRESSIVE STRENGTH OF STRUCTURAL CONCRETE AT 28 DAYS
fy	SPECIFIED YIELD STRENGTH OF REINFORCEMENT
fu	ULTIMATE STRENGTH OF STEEL
f'm	SPECIFIED COMPRESSIVE STRENGTH OF MASONRY AT 28 DAYS
f'g	SPECIFIED COMPRESSIVE STRENGTH OF CMU GROUT
KSI	KIPS PER SQUARE INCH
LBS	POUNDS
PCF	POUNDS PER CUBIC FOOT
PSF	POUNDS PER SQUARE FOOT
PSI	POUNDS PER SQUARE INCH
P/S	PRESTRESSED
ø	DIAMETER
NIC	NOT IN CONTRACT
@	AT

Santa Clara Valley Transportation Authority

____NO EXCEPTIONS TAKEN (NET)
____MAKE CORRECTIONS NOTED (MCN)
____AMEND AND RESUBMIT (A/R)

Any action shown above is subject to the terms of the contract and does not relieve the Contractor of any of its obligations under the contract, including design and detailing.

Contract No.: DB11002F

By: _____ Date: _____

Not For Construction

REV	DATE	BY	SUB	APP	DESCRIPTION
0	20130710				READINESS FOR CONSTRUCTION

DESIGNED BY E. MAMOYAC
DRAWN BY S. DE GUZMAN
CHECKED BY S. SENGUPTA
IN CHARGE R. BARLAAN
DATE 20130710

REGISTERED PROFESSIONAL ENGINEER — EDGARDO R. MAMOYAC # 6409 EXP. 6/30/14 — STRUCTURAL — STATE OF CALIFORNIA

Skanska Shimmick Herzog
1436 California Circle
Milpitas, California 95035
A Joint Venture

Anil Verma Associates, Inc.
1970 Broadway, Suite 525, Oakland, CA 94612
Phone: (510) 835-2537 Fax: (510) 835-2339

Lockwood, Andrews & Newnam, Inc. — A LEO A DALY COMPANY
T·Y·LIN INTERNATIONAL

SUBMITTED _____ APPROVED _____

BART SILICON VALLEY
BART SILICON VALLEY BERRYESSA EXTENSION

LINE, TRACK, STATIONS AND SYSTEMS DESIGN UNIT 023
ANCILLARY BUILDING

STRUCTURAL GENERAL NOTES

CADD FILENAME C700-S-DB-S809.dwg
SIZE D | SCALE NONE
CONTRACT NO. C700 | REV. 0
AREA CODE DB | SHEET NO. S809 | PAGE NO. 0287

JosephG Jun 26, 2013 - 4:29pm G:\Current Projects\VTA-Berryessa Extension Project\Station - Milpitas\CAD\Drawings Out\13-0710 C700 Milpitas Station - RFC Submit\C700-S-DB-S809.dwg

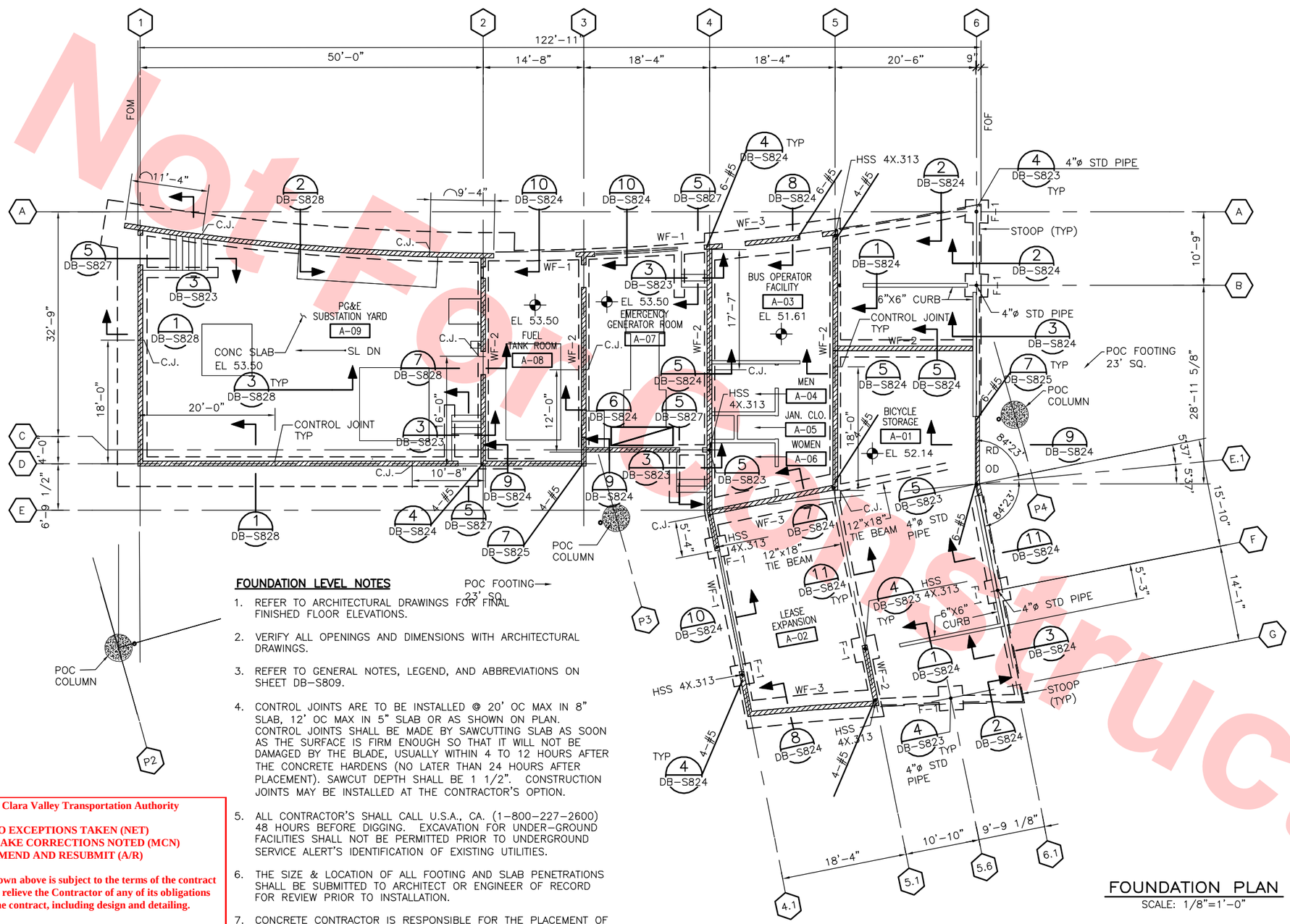

FOUNDATION PLAN

SCALE: 1/8"=1'-0"

FOUNDATION LEVEL NOTES

1. REFER TO ARCHITECTURAL DRAWINGS FOR FINAL FINISHED FLOOR ELEVATIONS.
2. VERIFY ALL OPENINGS AND DIMENSIONS WITH ARCHITECTURAL DRAWINGS.
3. REFER TO GENERAL NOTES, LEGEND, AND ABBREVIATIONS ON SHEET DB–S809.
4. CONTROL JOINTS ARE TO BE INSTALLED @ 20' OC MAX IN 8" SLAB, 12' OC MAX IN 5" SLAB OR AS SHOWN ON PLAN. CONTROL JOINTS SHALL BE MADE BY SAWCUTTING SLAB AS SOON AS THE SURFACE IS FIRM ENOUGH SO THAT IT WILL NOT BE DAMAGED BY THE BLADE, USUALLY WITHIN 4 TO 12 HOURS AFTER THE CONCRETE HARDENS (NO LATER THAN 24 HOURS AFTER PLACEMENT). SAWCUT DEPTH SHALL BE 1 1/2". CONSTRUCTION JOINTS MAY BE INSTALLED AT THE CONTRACTOR'S OPTION.
5. ALL CONTRACTOR'S SHALL CALL U.S.A., CA. (1–800–227–2600) 48 HOURS BEFORE DIGGING. EXCAVATION FOR UNDER–GROUND FACILITIES SHALL NOT BE PERMITTED PRIOR TO UNDERGROUND SERVICE ALERT'S IDENTIFICATION OF EXISTING UTILITIES.
6. THE SIZE & LOCATION OF ALL FOOTING AND SLAB PENETRATIONS SHALL BE SUBMITTED TO ARCHITECT OR ENGINEER OF RECORD FOR REVIEW PRIOR TO INSTALLATION.
7. CONCRETE CONTRACTOR IS RESPONSIBLE FOR THE PLACEMENT OF ALL EMBEDDED ITEMS.
8. ALL DIMENSIONS ARE TO CENTERLINE OF COLUMNS OR FACE OF CONCRETE, TYP UNLESS NOTED OTHERWISE.

Santa Clara Valley Transportation Authority

____NO EXCEPTIONS TAKEN (NET)
____MAKE CORRECTIONS NOTED (MCN)
____AMEND AND RESUBMIT (A/R)

Any action shown above is subject to the terms of the contract and does not relieve the Contractor of any of its obligations under the contract, including design and detailing.

Contract No.: DB11002F

By: _____ **Date:** _____

NOTES

1. CONCRETE SLAB SHALL BE 5" THICK WITH #4 @ 18" O.C. AT MID DEPTH
2. CMU WALLS:
   A. INTERIOR AND EXTERIOR WALLS– 8" CMU WITH ONE ROW OF #5 @ 24" O.C. VERTICAL BARS AND #5 @ 32" O.C. HORIZONTAL BARS

   B. SUBSTATION WALLS (EXCEPT LINE 2) – 8" CMU WITH TWO ROWS OF #5 @ 24" O.C. VERTICAL BARS AND #5 @ 32" O.C. HORIZONTAL BARS
3. PROVIDE 2–#5 JAMB BARS PER 12/DB–S824 @ ALL WALL ENDS U.N.O.

WALL FOOTING SCHEDULE

MARK	WIDTH	THICKNESS	REINFORCEMENT	
			LONGITUDINAL	TRANSVERSE
WF–1	1'–6"	12"	2 – #5	#4 @ 12" BOTTOM ONLY
WF–2	2'–6"	18"	2 – #5	#4 @ 12" TOP & BOTTOM
WF–3	4'–0"	12"	2 – #5	#4 @ 12" TOP & BOTTOM

FOOTING SCHEDULE

MARK	WIDTH	LENGTH	THICKNESS	REINFORCEMENT
F–1	3'–0"	3'–0"	12"	4–#5

8' 0' 8' 16'

GRAPHIC SCALE

KEY PLAN

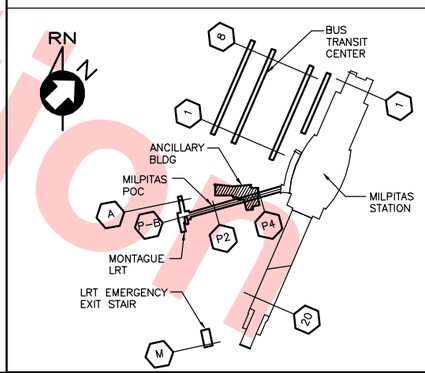

Not For Construction

REV	DATE	BY	SUB	APP	DESCRIPTION
0	20130710				READINESS FOR CONSTRUCTION

DESIGNED BY E. MAMOYAC
DRAWN BY H. ANGELES
CHECKED BY S. SENGUPTA
IN CHARGE R. BARLAAN
DATE 20130710

REGISTERED PROFESSIONAL ENGINEER EDGARDO R. MAMOYAC # E 9409 EXP. 6/30/14 STRUCTURAL STATE OF CALIFORNIA

Skanska Shimmick Herzog
1436 California Circle
Milpitas, California 95035
A Joint Venture

Anil Verma Associates, Inc.
1970 Broadway, Suite 525, Oakland, CA 94612
Phone: (510) 835-2537 Fax: (510) 835-2339
SUBMITTED

Lockwood, Andrews & Newnam, Inc. A CH2M HILL COMPANY
T·Y·LIN INTERNATIONAL
APPROVED

VTA BART SILICON VALLEY
BART SILICON VALLEY BERRYESSA EXTENSION

LINE, TRACK, STATIONS AND SYSTEMS
DESIGN UNIT 023
ANCILLARY BUILDING

FOUNDATION PLAN

CADD FILENAME C700–S–DB–810.dwg
SIZE D | SCALE 1/8"=1'–0"
CONTRACT NO. C700 | REV. 0
AREA CODE DB | SHEET NO. S810 | PAGE NO. 0288

JosephG Jun 26, 2013 – 4:30pm G:\Current Projects\VTA–Berryessa Extension Project\Station – Milpitas\CAD\Drawings Out\13–0710 C700 Milpitas Station – RFC Submittal\C700–S–DB–S810.dwg

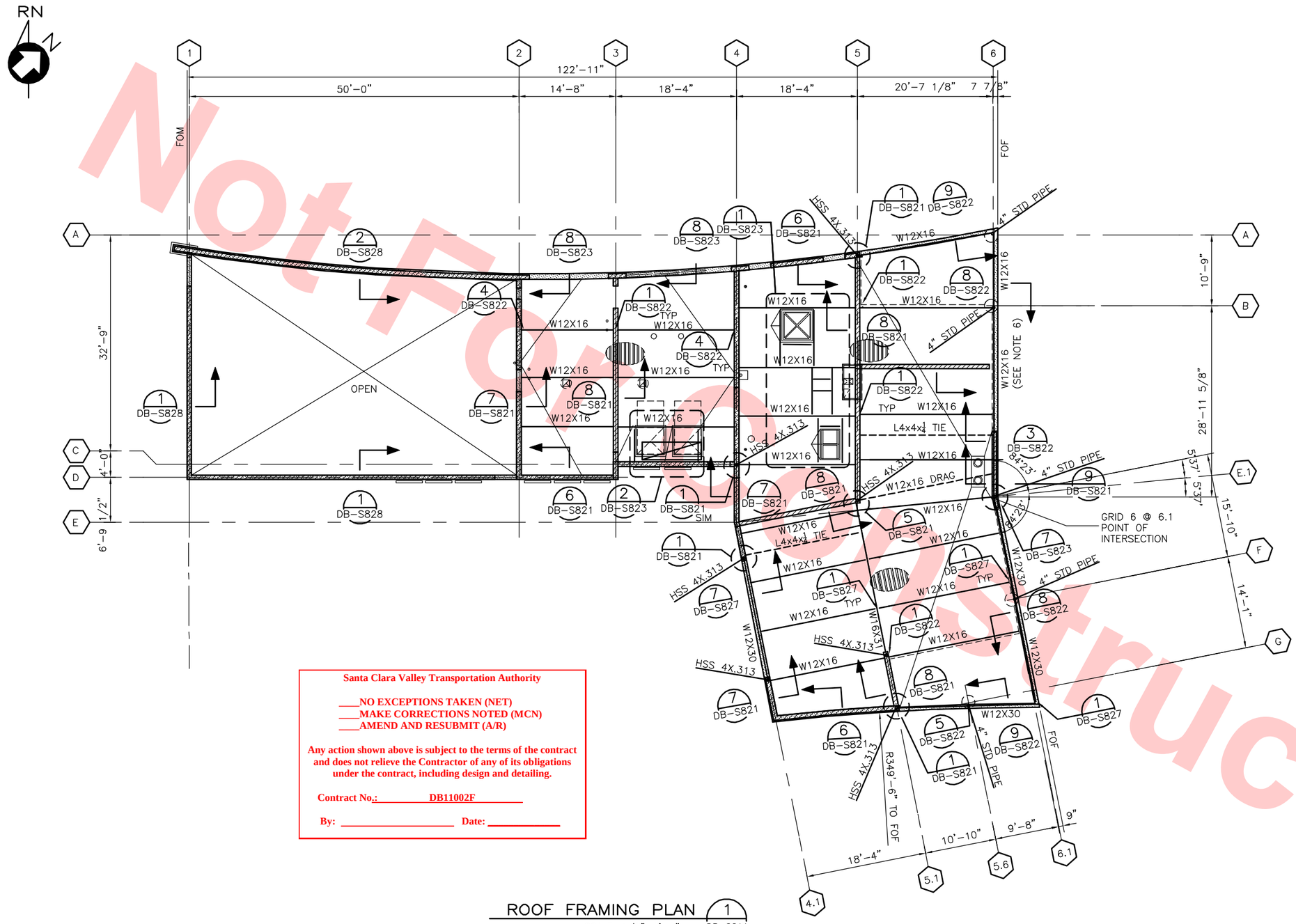

ROOF FRAMING PLAN (1 / DB-S811)

SCALE: 1/8"=1'-0"

Not For Construction

Santa Clara Valley Transportation Authority

____NO EXCEPTIONS TAKEN (NET)
____MAKE CORRECTIONS NOTED (MCN)
____AMEND AND RESUBMIT (A/R)

Any action shown above is subject to the terms of the contract and does not relieve the Contractor of any of its obligations under the contract, including design and detailing.

Contract No.: DB11002F

By: _____ Date: _____

NOTES

1. REFER TO GENERAL NOTES, LEGEND AND ABBREVIATIONS ON SHEET DB-S003.
2. CONTRACTOR TO VERIFY ALL DIMENSIONS & ELEVATIONS SHOWN WITH ARCH DWGS AND INFORM ARCHITECT AND/OR ENGINEER OF RECORD OF ANY DISREPANCY.
3. SEE ARCH DWGS FOR SIZE & LOCATION OF DECK PENETRATIONS.
4. NO MECH EQUIP, DUCTWORK, PIPING, ETC SHALL BE HUNG FROM METAL DECKING UNLESS APPROVED BY THE ARCHITECT OR ENGINEER OF RECORD.
5. SEE ARCH DWGS FOR EDGE OF DECK LOCATIONS.
6. DRAG BEAM SHALL BE CONTINUOUS FROM GRID E.1 TO B

LEGEND

GA 16 CORR. METAL DECK MODEL "N FORMLOK" BY VERCO DECKING, INC. (ICC ESR-1735P) CONTINUOUS OVER INTERIOR BEAMS OR SUPPORTS.

ROOF DRAIN

8' 0' 8' 16'

GRAPHIC SCALE

KEY PLAN

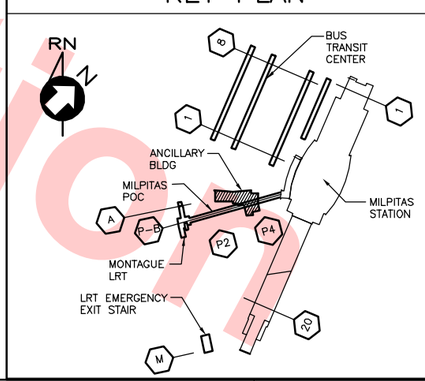

REV	DATE	BY	SUB	APP	DESCRIPTION
0	20130710				READINESS FOR CONSTRUCTION

DESIGNED BY E. MAMOYAC
DRAWN BY H. ANGELES
CHECKED BY S. SENGUPTA
IN CHARGE R. BARLAAN
DATE 20130710

REGISTERED PROFESSIONAL ENGINEER — EDGARDO R. MAMOYAC — # 6409 — EXP. 6/30/14 — STRUCTURAL — STATE OF CALIFORNIA

Skanska Shimmick Herzog
1436 California Circle
Milpitas, California 95035
A Joint Venture

Anil Verma Associates, Inc.
1970 Broadway, Suite 555, Oakland, CA 94612
Phone: (510) 835-2537 Fax: (510) 835-2339

SUBMITTED

Lackowicz, Andrews & Newmark, Inc. — A LEO A DALY COMPANY
T.Y. LIN INTERNATIONAL

APPROVED

VTA BART SILICON VALLEY
BART SILICON VALLEY BERRYESSA EXTENSION

LINE, TRACK, STATIONS AND SYSTEMS
DESIGN UNIT 023
ANCILLARY BUILDING

ROOF FRAMING PLAN

CADD FILENAME C700-S-DB-811.dwg
SIZE D | SCALE 1/8"=1'-0"
CONTRACT NO. C700 | REV. 0
AREA CODE DB | SHEET NO. S811 | PAGE NO. 0289

JosephG Jun 26, 2013 - 4:31pm G:\Current Projects\VTA-Berryessa Extension Project\Station - Milpitas\CAD\Drawings Out\13-0710 C700 Milpitas Station - RFC Submittl\C700-S-DB-S811.dwg

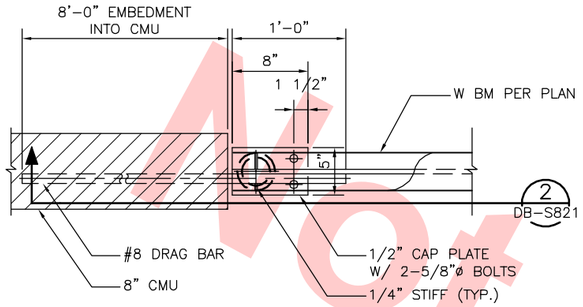

DRAG STRUT DETAIL (1 / DB-S821)

SCALE: 1 1/2" = 1'-0"

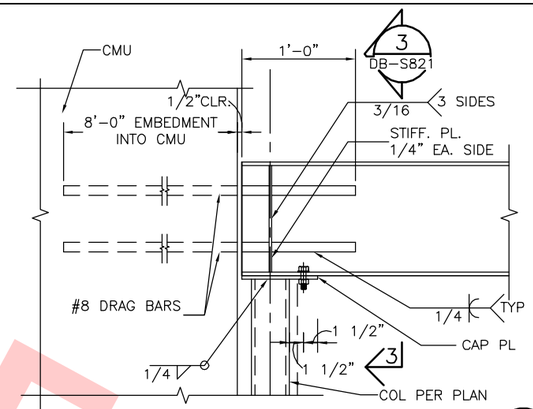

SECTION (2 / DB-S821)

SCALE: 1 1/2" = 1'-0"

DB-S810

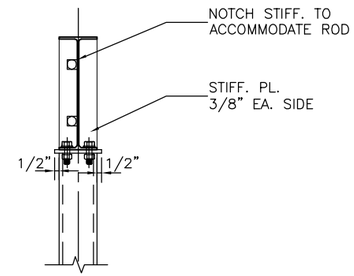

SECTION (3 / DB-S821)

SCALE: 1 1/2" = 1'-0"

METAL DECK WELDING SCHEDULE

LOCATION	MEMBERS PERPENDICULAR TO DECK SPAN * (PUDDLE WELDS)			MEMBERS PARALLEL TO DECK SPAN * (PUDDLE WELDS)		SEAM ATTACHMENT (1-1/2 TOP SEAM WELDS)
	EFFECTIVE DIAMETER (INCH)	NO OF WELDS PER UNIT EA SUPPORT	LOCATION (FLUTE NO PER UNIT)	EFFECTIVE DIAMETER (INCH)	SPACING (INCH)	SPACING (INCH)
ROOF	1/2	4	1,2,3,4	1/2	12	24

* METAL DECKING SHALL BE ATTACHED TO ALL SUPPORTING FRAMING MEMBERS

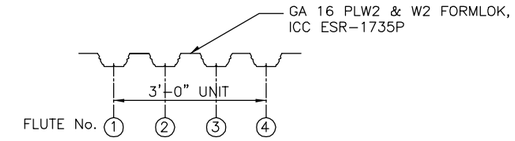

TYP. ROOF DECK CONSTRUCTION (4 / DB-S821)

SCALE: 1 1/2" = 1'-0"

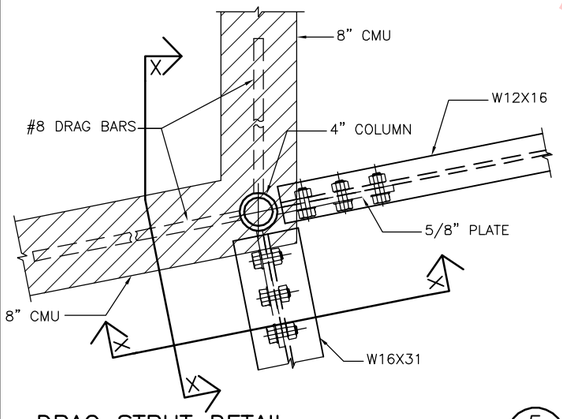

DRAG STRUT DETAIL (5 / DB-S821)

SCALE: 1 1/2" = 1'-0"

DB-S811

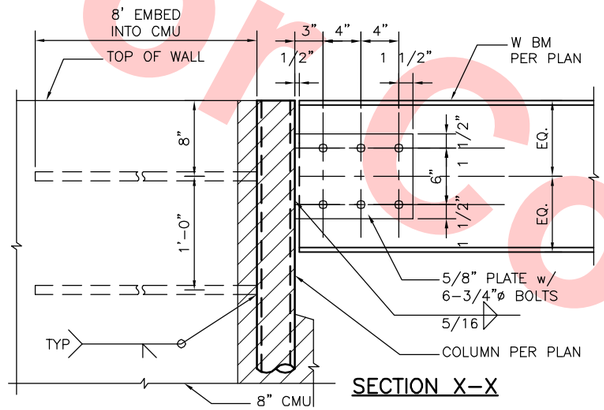

SECTION X-X

Santa Clara Valley Transportation Authority

____NO EXCEPTIONS TAKEN (NET)
____MAKE CORRECTIONS NOTED (MCN)
____AMEND AND RESUBMIT (A/R)

Any action shown above is subject to the terms of the contract and does not relieve the Contractor of any of its obligations under the contract, including design and detailing.

Contract No.: DB11002F

By: _____ Date: _____

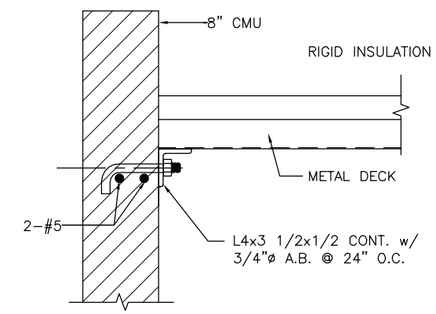

TYPICAL DETAIL (6 / DB-S821)

SCALE: 1 1/2"=1'-0"

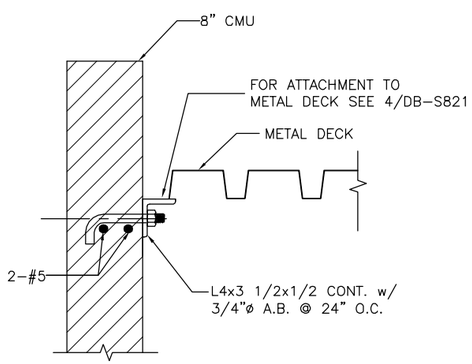

TYPICAL DETAIL (7 / DB-S821)

SCALE: 1 1/2" = 1'-0"

DB-S811

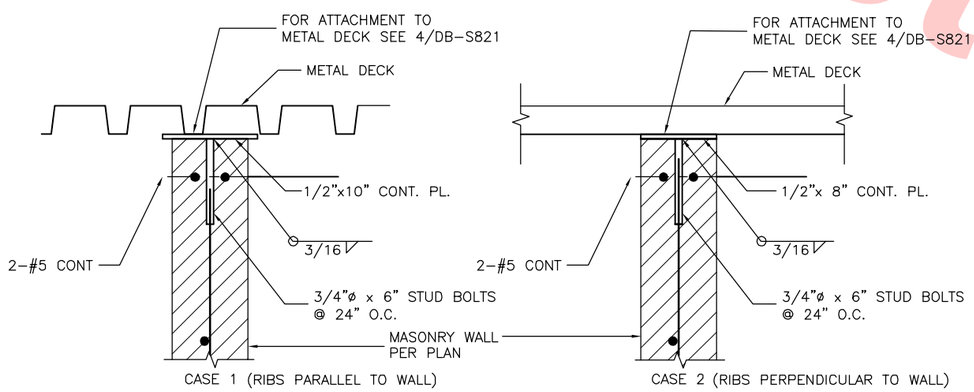

TYPICAL MASONRY WALL TOP (8 / DB-S821)

SCALE: 1 1/2" = 1'-0"

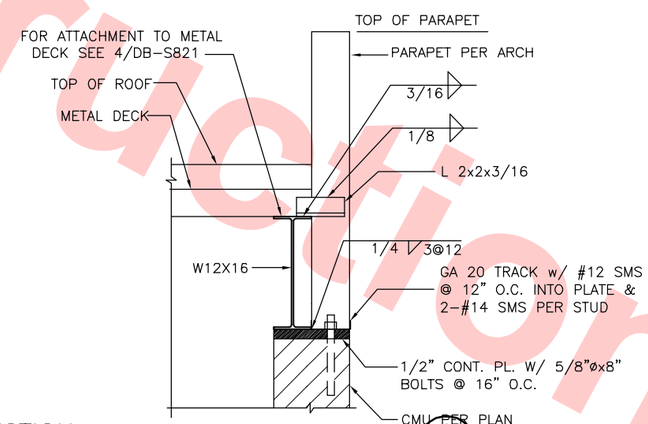

SECTION (9 / DB-S821)

SCALE: 1 1/2" = 1'-0"

DB-S811

REV	DATE	BY	SUB	APP	DESCRIPTION
0	20130710				READINESS FOR CONSTRUCTION

DESIGNED BY E. MAMOYAC
DRAWN BY R. COLLADO
CHECKED BY S. SENGUPTA
IN CHARGE R. BARLAAN
DATE 20130710

REGISTERED PROFESSIONAL ENGINEER — CLAUDIO R. MAMOYAC — # E 9409 — EXP. 6/30/14 — STRUCTURAL — STATE OF CALIFORNIA

SUBMITTED: Skanska Shimmick Herzog — 1436 California Circle, Milpitas, California 95035 — A Joint Venture; Anil Verma Associates, Inc. — 1970 Broadway, Suite 525, Oakland, CA 94612, Phone: (510) 835-2537, Fax: (510) 535-2339

APPROVED: Lockwood, Andrews & Newnam, Inc. — A LAN & BALY COMPANY; T·Y·LIN INTERNATIONAL

VTA BART SILICON VALLEY — BART SILICON VALLEY BERRYESSA EXTENSION

LINE, TRACK, STATIONS, AND SYSTEMS
DESIGN UNIT 023
ANCILLARY BUILDING

MISCELLANEOUS DETAILS

CADD FILENAME C700-S-DB-S821.dwg
SIZE D | SCALE AS NOTED
CONTRACT NO. C700 | REV. 0
AREA CODE DB | SHEET NO. S821 | PAGE NO. 0290

JosephG Jun 26, 2013 - 4:32pm G:\Current Projects\VTA-Berryessa Extension Project\Station - Milpitas\CAD\Drawings Out\13-0710 C700 Milpitas Station - RFC Submit\C700-S-DB-S821.dwg

Not For Construction

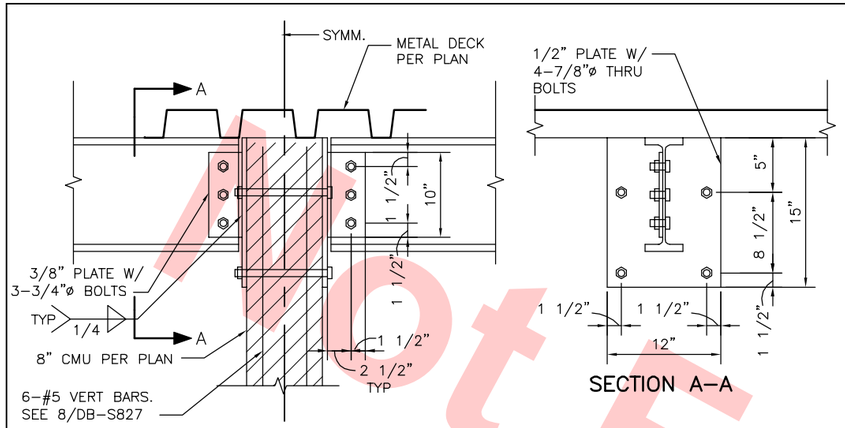

STEEL BEAM TO MASONRY DETAIL (1) DB-S822
SCALE: 1 1/2" = 1'-0"

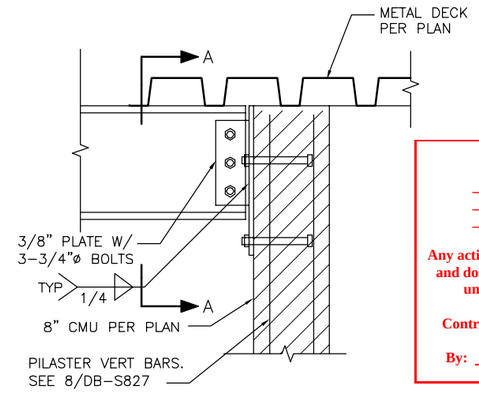

STEEL BEAM TO MASONRY DETAIL (2) DB-S822
SCALE: 1 1/2" = 1'-0"

Santa Clara Valley Transportation Authority

____NO EXCEPTIONS TAKEN (NET)
____MAKE CORRECTIONS NOTED (MCN)
____AMEND AND RESUBMIT (A/R)

Any action shown above is subject to the terms of the contract and does not relieve the Contractor of any of its obligations under the contract, including design and detailing.

Contract No.: DB11002F

By: _____ Date: _____

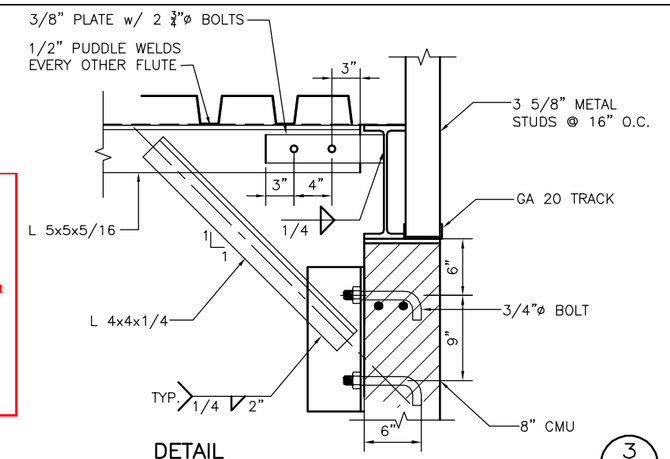

DETAIL (3) DB-S822
SCALE: 1 1/2" = 1'-0"

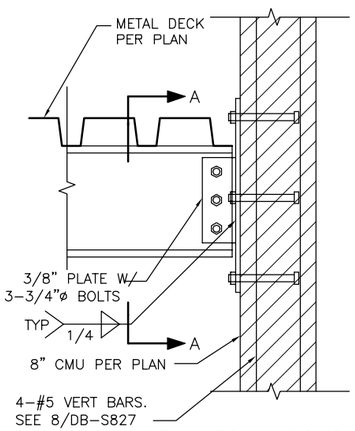

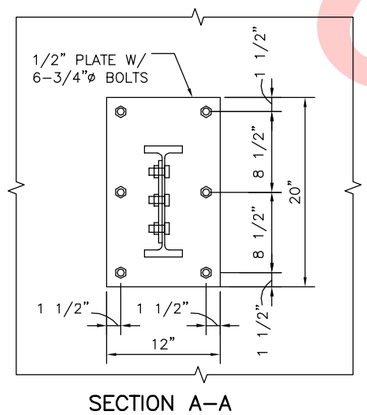

STEEL BEAM TO MASONRY DETAIL (4) DB-S822
SCALE: 1 1/2" = 1'-0"

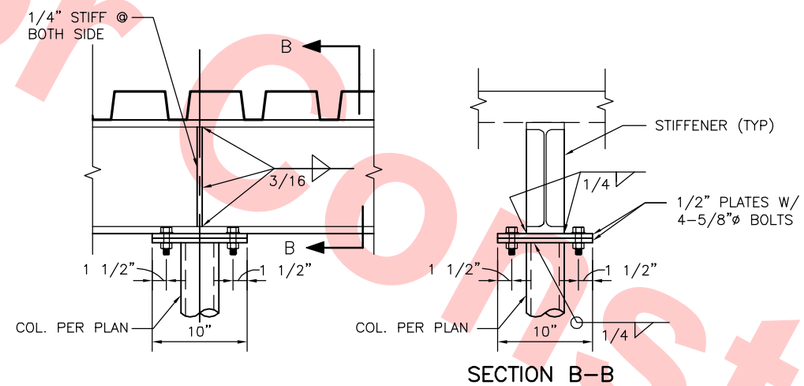

CONTINOUS BEAM AT STEEL COLUMN (5) DB-S822
SCALE: 1 1/2" = 1'-0"

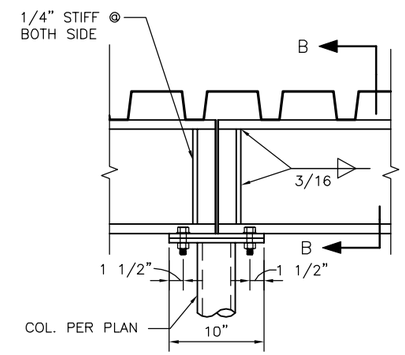

SIMPLE BEAM AT STEEL COLUMN (6) DB-S822
SCALE: 1 1/2" = 1'-0"

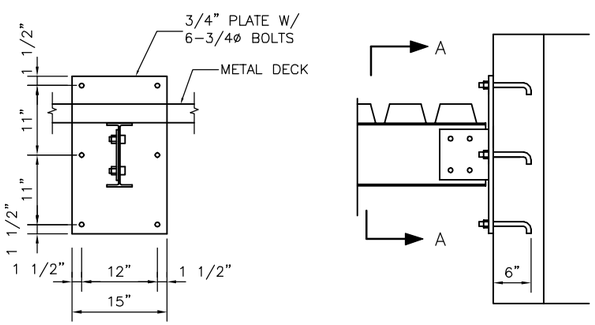

STEEL BEAM TO MASONRY DETAIL (7) DB-S822
SCALE: 1" = 1'-0"

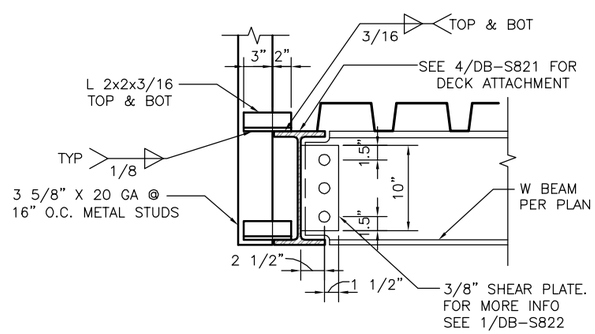

PARAPET PERPENDICULAR TO DECK RIBS (8) DB-S822
SCALE: 1 1/2" = 1'-0"

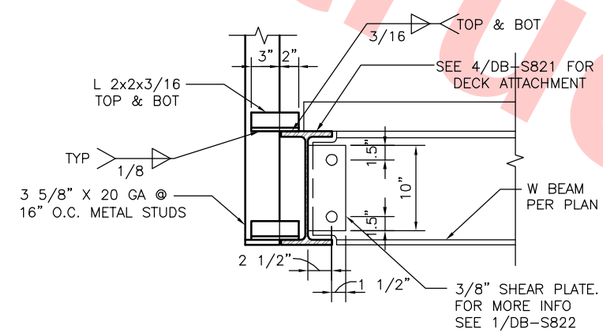

PARAPET PERPENDICULAR TO DECK RIBS (9) DB-S822
SCALE: 1 1/2" = 1'-0"

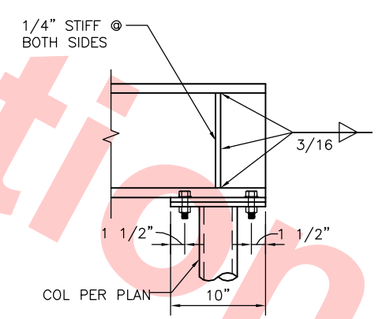

DETAIL (10) DB-S822
SCALE: 1 1/2" = 1'-0"

REV	DATE	BY	SUB	APP	DESCRIPTION
0	20130710				READINESS FOR CONSTRUCTION

DESIGNED BY E. MAMOYAC
DRAWN BY S. DE GUZMAN
CHECKED BY S. SENGUPTA
IN CHARGE R. BARLAAN
DATE 20130710

REGISTERED PROFESSIONAL ENGINEER — EDGARDO R. MAMOYAC — # 6 9409 — EXP. 6/30/14 — STRUCTURAL — STATE OF CALIFORNIA

Skanska Shimmick Herzog
1436 California Circle, Milpitas, California 95035
A Joint Venture

Anil Verma Associates, Inc.
1970 Broadway, Suite 525, Oakland, CA 94612
Phone: (510) 835-2537 Fax: (510) 835-2339
SUBMITTED

Lockwood, Andrews & Newnam, Inc. — A CH2M HILL COMPANY
T-Y-LIN INTERNATIONAL
APPROVED

VTA BART SILICON VALLEY
BART SILICON VALLEY BERRYESSA EXTENSION

LINE, TRACK, STATIONS, AND SYSTEMS
DESIGN UNIT 023
ANCILLARY BUILDING

MISCELLANEOUS DETAILS

CADD FILENAME C700-S-DB-S822.dwg
SIZE D | SCALE AS NOTED
CONTRACT NO. C700 | REV. 0
AREA CODE DB | SHEET NO. S822 | PAGE NO. 0291

JosephG Jun 26, 2013 – 4:33pm G:\Current Projects\VTA-Berryessa Extension Project\Station – Milpitas\040\Drawings Out\13-0710 C700 Milpitas Station – RFC Submittal\C700-S-DB-S822.dwg

Not For Construction

Not For Construction

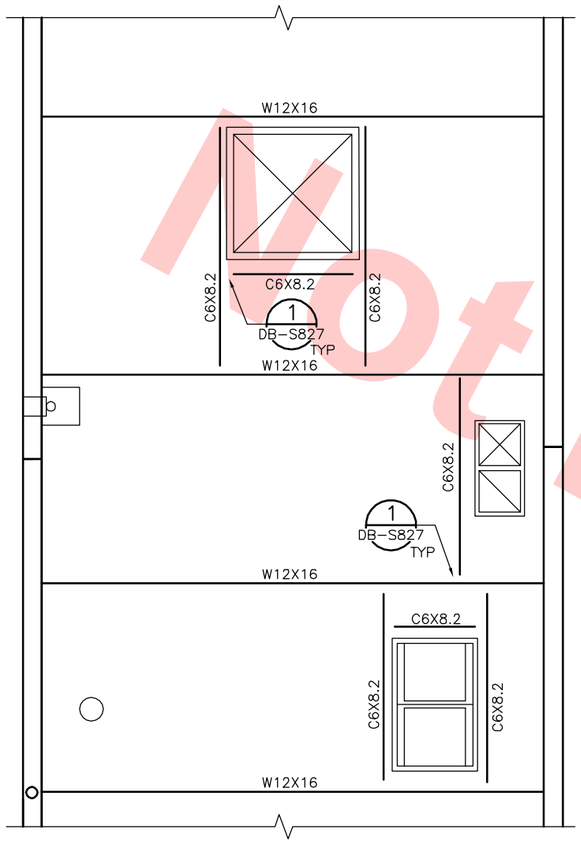

INTERIOR ROOF OPENING (1 / DB-S823)

SCALE: 3/8" = 1'-0"

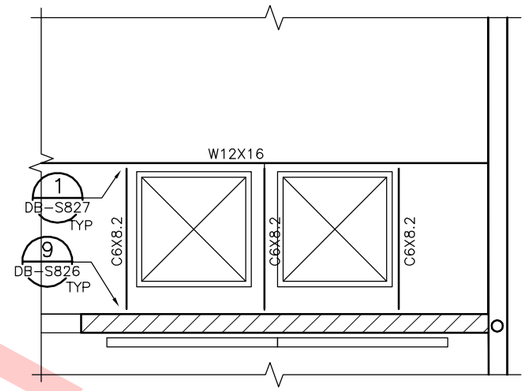

ROOF OPENING AT OR NEAR CMU WALL (2 / DB-S823)

SCALE: 3/8" = 1'-0"

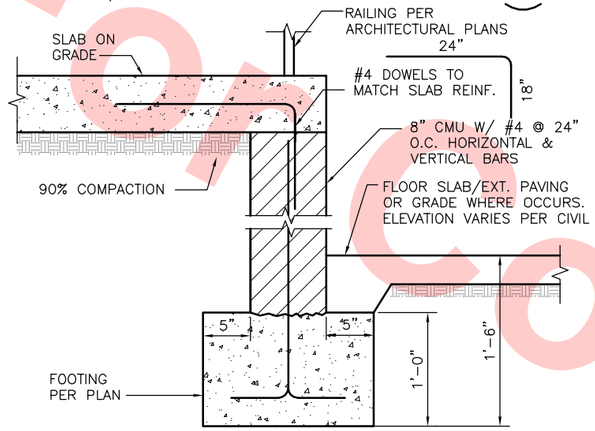

DETAIL (3 / DB-S823)

SCALE: 1 1/2" = 1'-0"

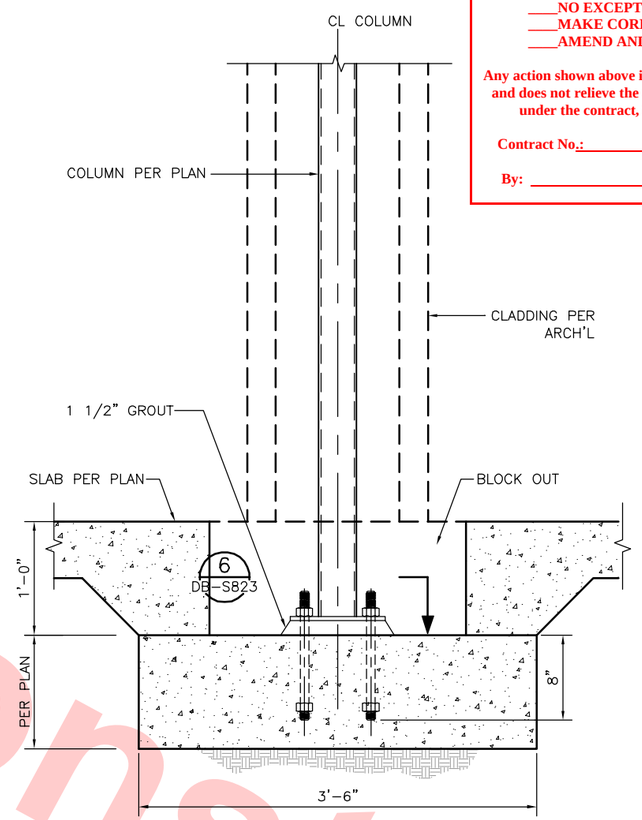

TYPICAL COLUMN DETAIL (4 / DB-S823, DB-S810)

SCALE: 1 1/2" = 1'-0"

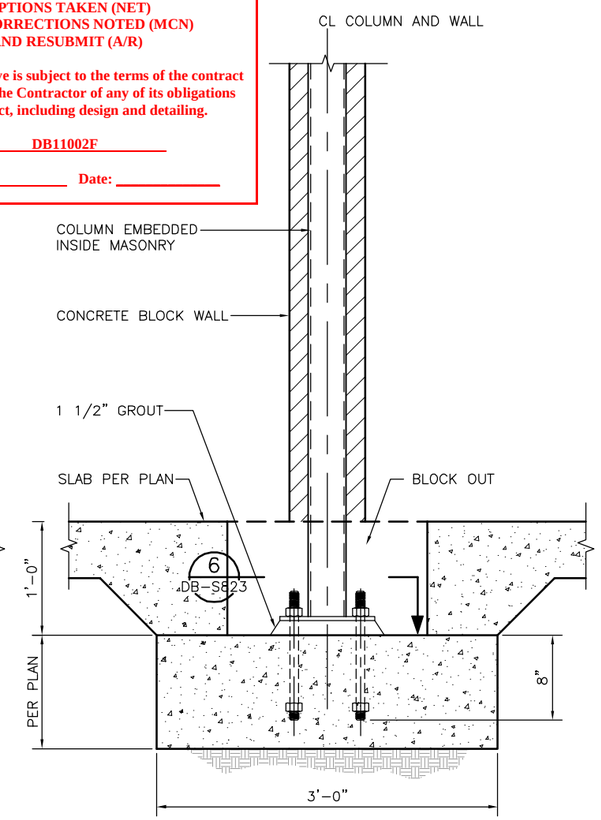

TYPICAL COLUMN INSIDE MASONRY (5 / DB-S823, DB-S810)

SCALE: 1 1/2" = 1'-0"

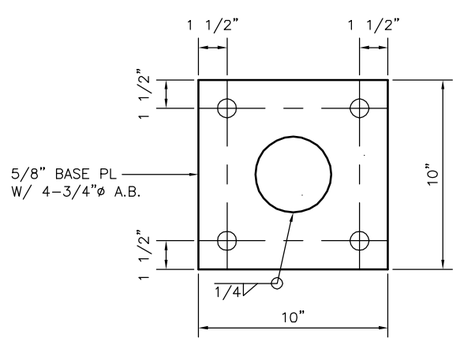

BASE PLATE DETAIL (6 / DB-S823)

SCALE: 3" = 1'-0"

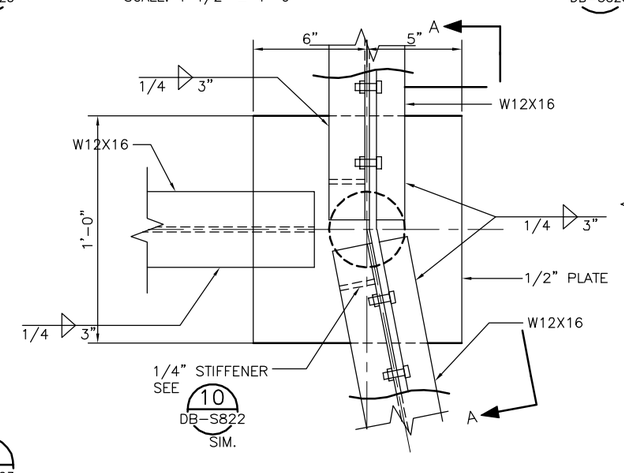

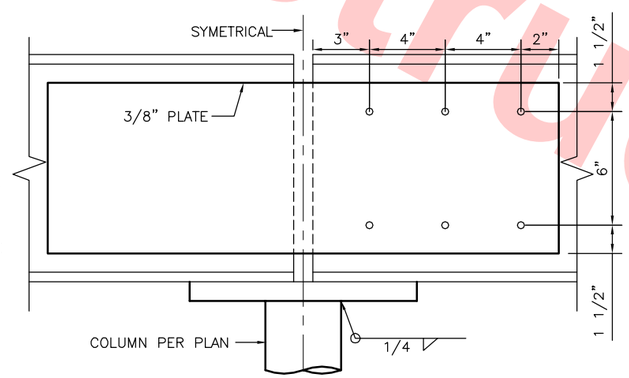

SECTION A-A DETAIL (7 / DB-S823)

SCALE: 3" = 1'-0"

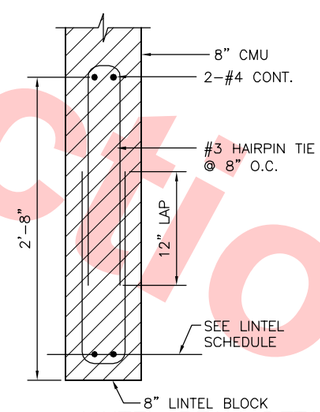

LINTEL SCHEDULE	
OPENING WIDTH	REINFORCEMENT
4'-0" OR LESS	2 - #4
8'	2 - #5
12'	2 - #5
16'	2 - #6
20'	2 - #7

NOTE:

OMIT 2-#4 TOP BARS AND INVERTED HAIRPINS FOR 4'-0" OR LESS OPENINGS

LINTEL BEAM DETAIL (8 / DB-S823)

SCALE: 3" = 1'-0"

Santa Clara Valley Transportation Authority

____NO EXCEPTIONS TAKEN (NET)
____MAKE CORRECTIONS NOTED (MCN)
____AMEND AND RESUBMIT (A/R)

Any action shown above is subject to the terms of the contract and does not relieve the Contractor of any of its obligations under the contract, including design and detailing.

Contract No.: DB11002F

By: _____ Date: _____

REV	DATE	BY	SUB	APP	DESCRIPTION
0	20130710				READINESS FOR CONSTRUCTION

DESIGNED BY E. MAMOYAC
DRAWN BY P. NG
CHECKED BY S. SENGUPTA
IN CHARGE R. BARLAAN
DATE 20130710

REGISTERED PROFESSIONAL ENGINEER ELIJAH R. MAMOYAC C 49409 EXP. 6/30/14 STRUCTURAL STATE OF CALIFORNIA

Skanska Shimmick Herzog
1436 California Circle
Milpitas, California 95035
A Joint Venture

SUBMITTED: Anil Verma Associates, Inc. 1970 Broadway, Suite 225 Oakland, CA 94612 Phone: (510) 835-2537 Fax: (510) 835-2339

APPROVED: Lockwood, Andrews & Newnam, Inc. A LEO A DALY COMPANY; T·Y·LIN INTERNATIONAL

BART SILICON VALLEY BERRYESSA EXTENSION

LINE, TRACK, STATIONS, AND SYSTEMS
DESIGN UNIT 023
ANCILLARY BUILDING

MISCELLANEOUS DETAILS

CADD FILENAME C700-S-DB-S823.dwg
SIZE D | SCALE AS NOTED
CONTRACT NO. C700 | REV. 0
AREA CODE DB | SHEET NO. S823 | PAGE NO. 0292

JosephG Jun 26, 2013 - 4:34pm G:\Current Projects\VTA-Berryessa Extension Project\Station - Milpitas\CAD\Drawings Out\13-0710 C700 Milpitas Station - RFC Submit\C700-S-DB-S823.dwg

Not For Construction

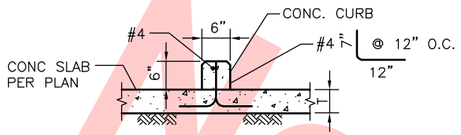

CONCRETE CURB 1 DB-S824
SCALE: 3/4" = 1'-0"

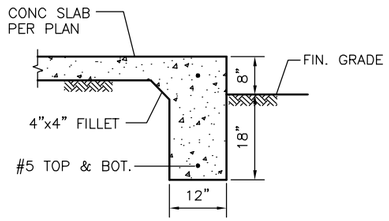

DETAIL 2 DB-S824
SCALE: 3/4" = 1'-0"

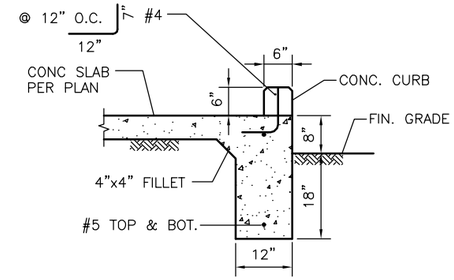

DETAIL 3 DB-S824
SCALE: 3/4" = 1'-0"

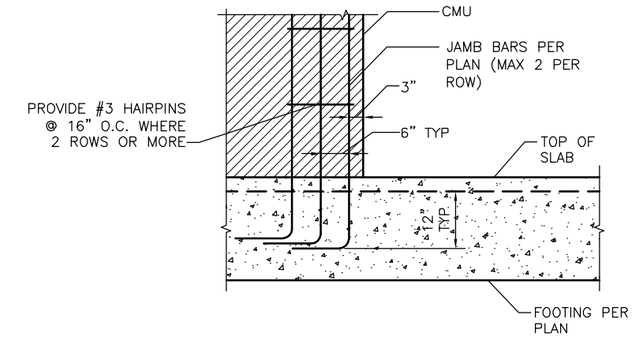

JAMB BAR DETAIL 4 DB-S824
SCALE: 3/4" = 1'-0"

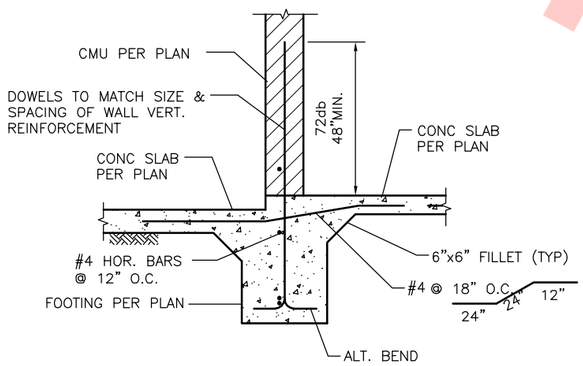

INTERIOR WALL FOOTING DETAIL 5 DB-S824
SCALE: 3/4" = 1'-0"

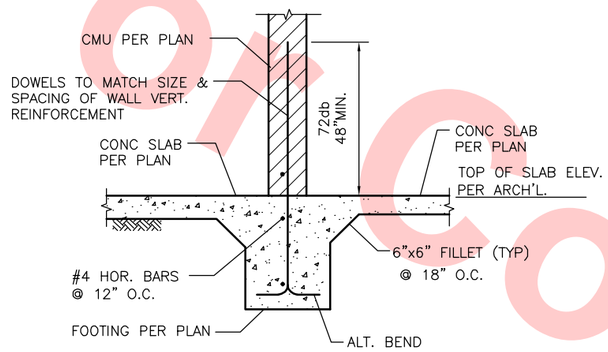

INTERIOR WALL FOOTING DETAIL 6 DB-S824
SCALE: 3/4" = 1'-0"

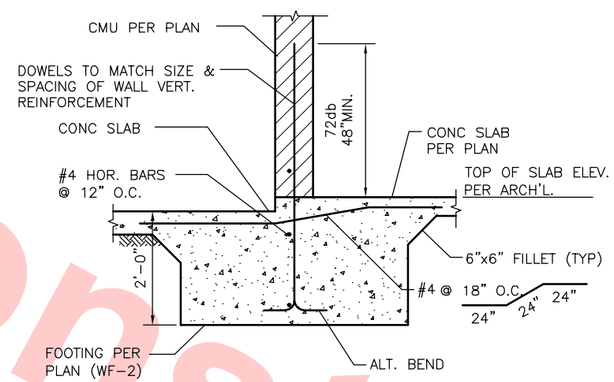

INTERIOR WALL FOOTING DETAIL AT SHEAR WALL 7 DB-S824
SCALE: 3/4" = 1'-0"

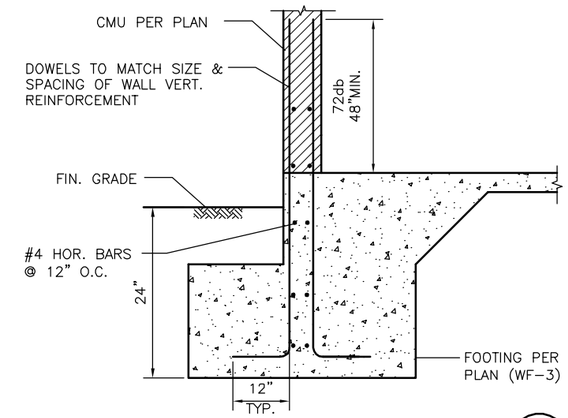

EXTERIOR WALL FOOTING DETAIL 8 DB-S824
SCALE: 3/4" = 1'-0"

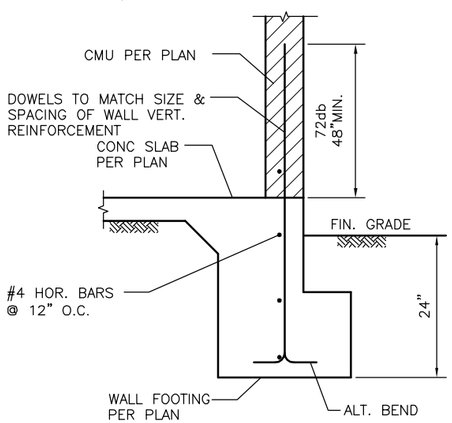

EXTERIOR WALL FOOTING DETAIL 9 DB-S824
SCALE: 3/4" = 1'-0"

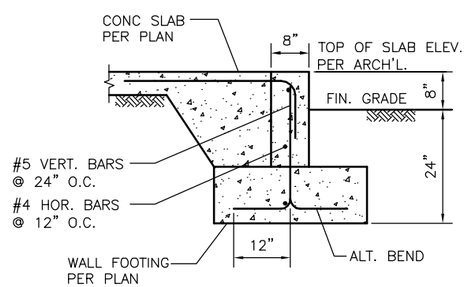

EXTERIOR WALL FOOTING DETAIL 10 DB-S824
SCALE: 3/4" = 1'-0"

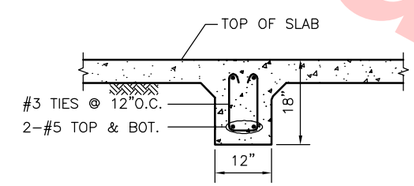

TIE BEAM 11 DB-S824
SCALE: 3/4" = 1'-0"

Santa Clara Valley Transportation Authority

____NO EXCEPTIONS TAKEN (NET)
____MAKE CORRECTIONS NOTED (MCN)
____AMEND AND RESUBMIT (A/R)

Any action shown above is subject to the terms of the contract and does not relieve the Contractor of any of its obligations under the contract, including design and detailing.

Contract No.: DB11002F

By: _____ **Date:** _____

REV	DATE	BY	SUB	APP	DESCRIPTION
0	20130710				READINESS FOR CONSTRUCTION

DESIGNED BY E. MAMOYAC
DRAWN BY S. DE GUZMAN
CHECKED BY S. SENGUPTA
IN CHARGE R. BARLAAN
DATE 20130710

REGISTERED PROFESSIONAL ENGINEER EUGENIO R. MAMOYAC # 6 9409 EXP. 6/30/14 STRUCTURAL STATE OF CALIFORNIA

Skanska Shimmick Herzog
1436 California Circle
Milpitas, California 95035
A Joint Venture

Anil Verma Associates, Inc.
1970 Broadway, Suite 525, Oakland, CA 94612
Phone: (510) 835-2537 Fax: (510) 835-2339
SUBMITTED

Lockwood, Andrews & Newnam, Inc. A LEO A DALY COMPANY
T·Y·LIN INTERNATIONAL
APPROVED

BART SILICON VALLEY
BART SILICON VALLEY BERRYESSA EXTENSION

LINE, TRACK, STATIONS, AND SYSTEMS
DESIGN UNIT 023
ANCILLARY BUILDING

MISCELLANEOUS DETAILS

CADD FILENAME C700-S-DB-S824.dwg
SIZE D | SCALE 3/4"=1'-0"
CONTRACT NO. C700 | REV. 0
AREA CODE DB | SHEET NO. S824 | PAGE NO. 0293

JosephG Jun 26, 2013 – 4:34pm G:\Current Projects\VTA-Berryessa Extension Project\Station – Milpitas\CAD\Drawings Out\13-0710 C700 Milpitas Station – RFC Submit\C700-S-DB-S824.dwg

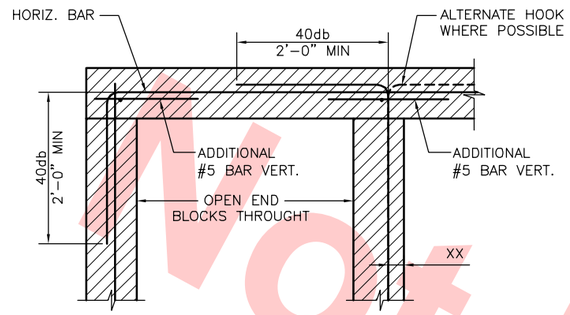

CORNER PLAN

INTERSECTION PLAN

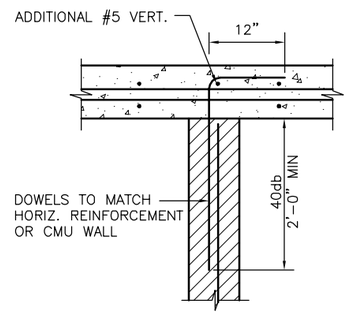

INTERSECTION AT CONCRETE PLAN

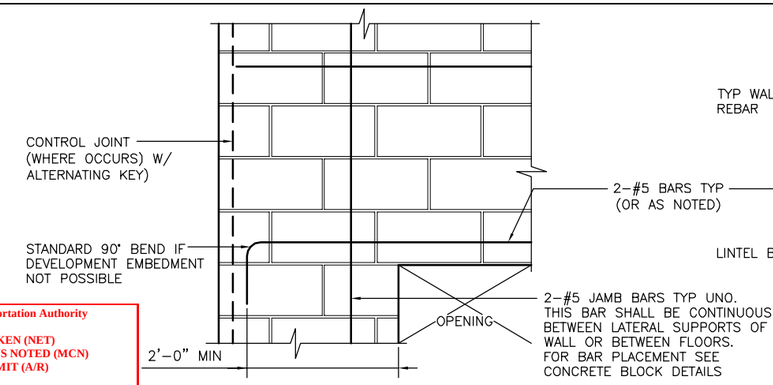

ELEVATION

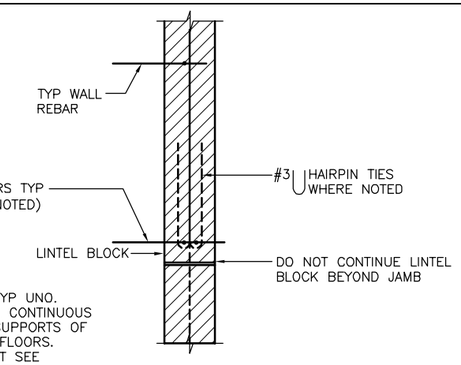

SECTION

REBAR AT CMU WALL OPENING DETAIL (2) DB-S825

SCALE: 1"=1'-0"

Santa Clara Valley Transportation Authority

____NO EXCEPTIONS TAKEN (NET)
____MAKE CORRECTIONS NOTED (MCN)
____AMEND AND RESUBMIT (A/R)

Any action shown above is subject to the terms of the contract and does not relieve the Contractor of any of its obligations under the contract, including design and detailing.

Contract No.: DB11002F

By: _____ Date: _____

NOTE:

PLACE VERT. REBAR AT CENTER LINE OF WALL UNLESS NOTED OTHERWISE (UNO)

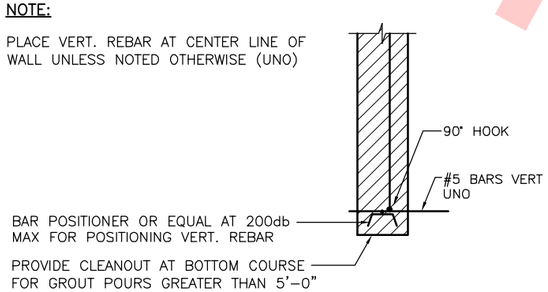

JAMB OR WALL END
PLAN

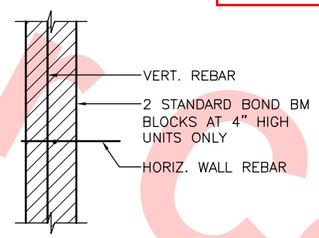

BOND BEAM BLOCK
SECTION
(AT ALL HORIZ. REBAR)

CONCRETE BLOCK WALL DETAILS (1) DB-S825

SCALE: 1"=1'-0"

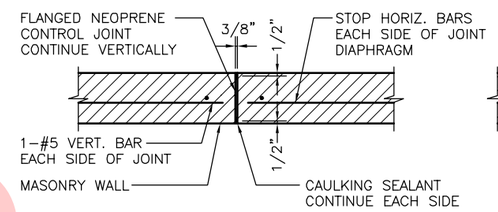

WALL CONTROL JOINT W/ FLANGED NEOPRENE

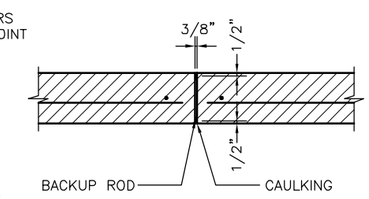

WALL CONTROL JOINT

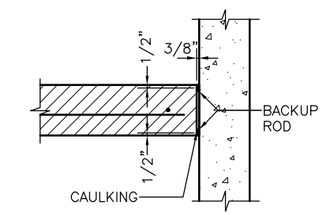

WALL ABUTMENT JOINT

MASONRY CONTROL JOINT DETAILS (3) DB-S825

SCALE: 1"=1'-0"

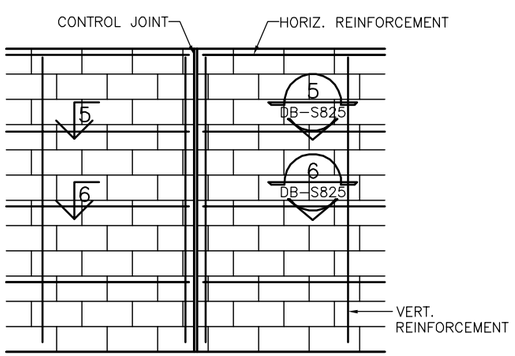

MASONRY WALL WITH CONTROL JOINT
ELEVATION

CONTROL JOINT DETAIL (4) DB-S825

SCALE: 1/2"=1'-0"

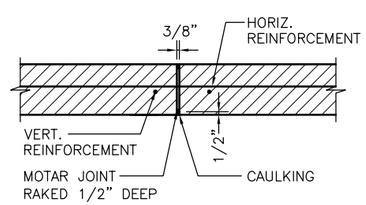

(HORIZ. REINFORCEMENT CONTINUES THROUGH JOINT ONLY AT LEDGER OR LINTEL)

SECTION (5) DB-S825

SCALE: 1"=1'-0"

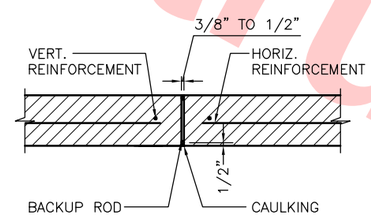

(HORIZ. REINFORCEMENT DOES NOT CROSS JOINT)

SECTION (6) DB-S825

SCALE: 1"=1'-0"

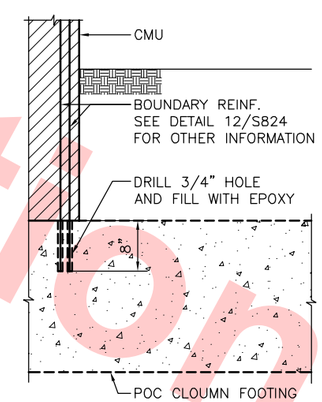

BOUNDARY BARS ON EXIST. CONC. (7) DB-S825

SCALE: 1"=1'-0"

Not For Construction

REV	DATE	BY	SUB	APP	DESCRIPTION
0	20130710				READINESS FOR CONSTRUCTION

DESIGNED BY E. MAMOYAC
DRAWN BY P. NG
CHECKED BY S. SENGUPTA
IN CHARGE R. BARLAAN
DATE 20130710

REGISTERED PROFESSIONAL ENGINEER ELADIO R. MAMOYAC # 6 9409 EXP. 6/30/14 STRUCTURAL STATE OF CALIFORNIA

Skanska Shimmick Herzog
1436 California Circle
Milpitas, California 95035
A Joint Venture

Anil Verma Associates, Inc.
1970 Broadway, Suite 525, Oakland, CA 94612
Phone: (510) 835-2537 Fax: (510) 835-2339

SUBMITTED

Lockwood, Andrews & Newnam, Inc. A LEO A DALY COMPANY
T·Y·LIN INTERNATIONAL

APPROVED

VTA BART SILICON VALLEY

BART SILICON VALLEY BERRYESSA EXTENSION

LINE, TRACK, STATIONS, AND SYSTEMS
DESIGN UNIT 023
ANCILLARY BUILDING

MISCELLANEOUS DETAILS

CADD FILENAME C700-S-DB-S825.dwg
SIZE D | SCALE AS NOTED
CONTRACT NO. C700 | REV. 0
AREA CODE DB | SHEET NO. S825 | PAGE NO. 0294

JosephG Jun 26, 2013 - 4:35pm G:\Current Projects\VTA-Berryessa Extension Project\Station - Milpitas\CAD\Drawings Out\13-0710 C700 Milpitas Station - RFC Submit\C700-S-DB-S825.dwg

BOLT DIAMETER	VERT BOLT EMBEDMENT LENGTH	HORIZ BOLT EMBEDMENT LENGTH	HEADED STUD FILLET WELD SIZE, "S".
1/2"	6"	4"	1/4"
5/8"	6"	4"	5/16"
3/4"	7"	5"	5/16"
7/8"	8"	6"	5/16"
1"	9"	7"	3/8"
1 1/8"	10"	8"	-----
1 1/4"	11"	9"	-----

NOTES:

1. PROVIDE ANCHORS, ANCHOR BOLTS AND EXPANSION BOLTS PER THIS SCHEDULE UNLESS NOTED ON PLANS OR DETAILS.
2. EXPANSION OR ADHESIVE BOLTS USED IN MASONRY SHALL HAVE I.C.C APPROVAL IN MASONRY.
3. AT "ANCHORS" USE 3/16" FILLET WELD("S").
4. THICKNESS OF DRYPACK DOES NOT APPLY TOWARDS EMBEDMENT.

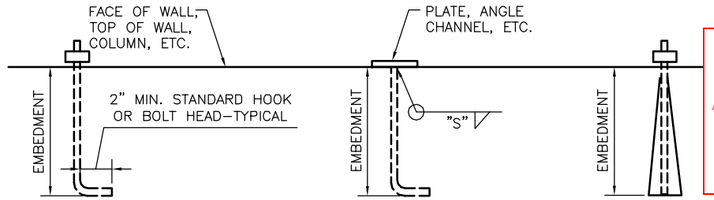

ANCHOR BOLT

ANCHOR
(HEADED STUD SIMILAR)

EXPANSION BOLT
(EPOXY BOLT SIMILAR)

TYP. ANCHOR, ANCHOR BOLT & EXPANSION BOLT SCEDULE (UNO) (1 / DB-S826)
SCALE: NTS

Santa Clara Valley Transportation Authority

____NO EXCEPTIONS TAKEN (NET)
____MAKE CORRECTIONS NOTED (MCN)
____AMEND AND RESUBMIT (A/R)

Any action shown above is subject to the terms of the contract and does not relieve the Contractor of any of its obligations under the contract, including design and detailing.

Contract No.: DB11002F

By: _____ Date: _____

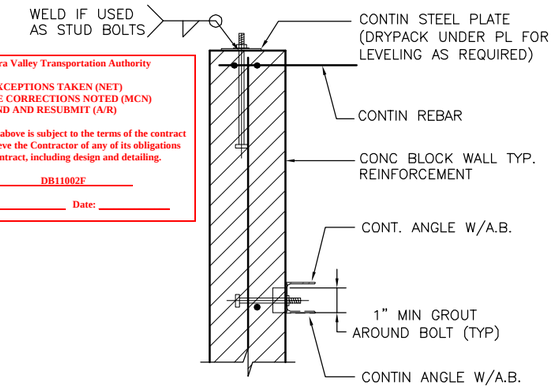

ANCHOR BOLTS AT BLOCK WALLS (2 / DB-S826)
SCALE: 1 1/2"=1'-0"

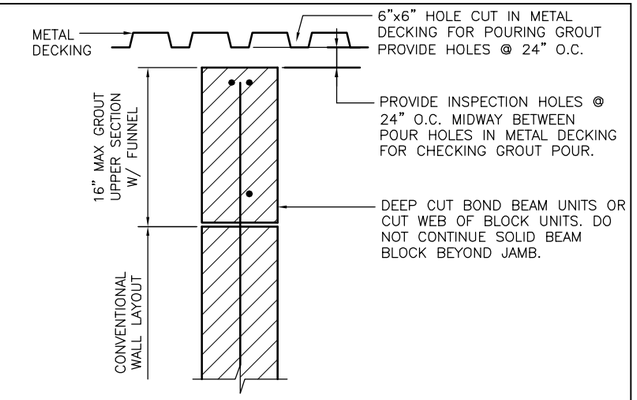

GROUT POUR AT TOP OF WALL (3 / DB-S825)
SCALE: 1 1/2"=1'-0"

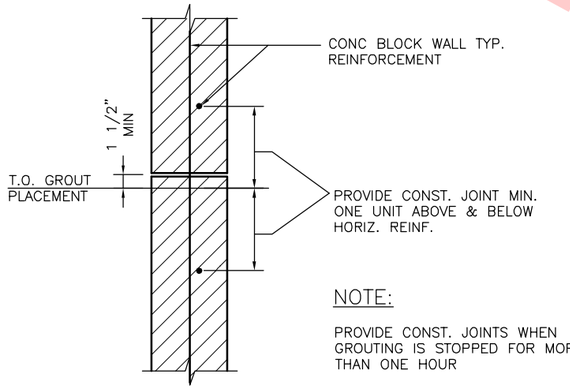

NOTE:

PROVIDE CONST. JOINTS WHEN GROUTING IS STOPPED FOR MORE THAN ONE HOUR

TYPICAL HORIZ. CONSTRUCTION JOINT (4 / DB-S826)
SCALE: 1 1/2"=1'-0"

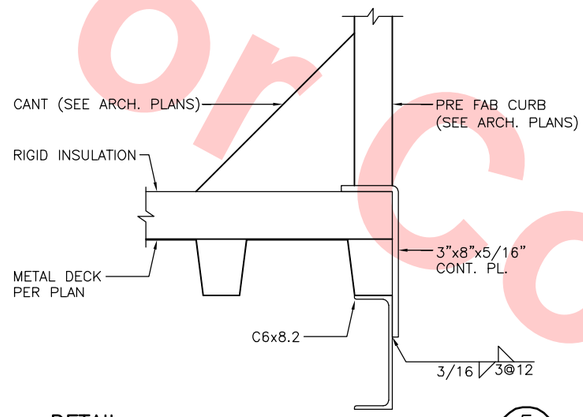

DETAIL (5 / DB-S826)
SCALE: 3"=1'-0"

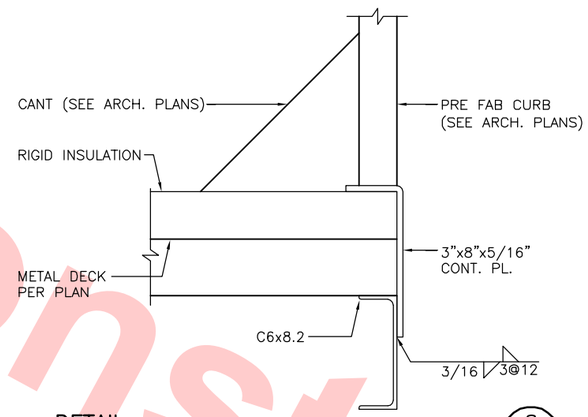

DETAIL (6 / DB-S826)
SCALE: 3"=1'-0"

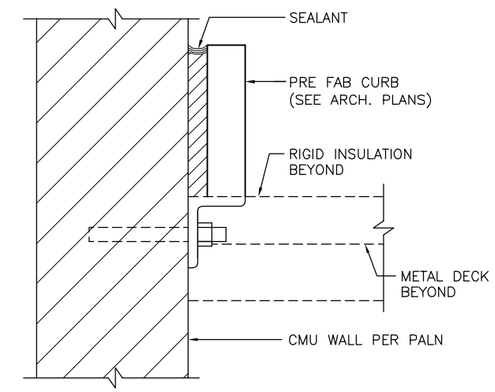

DETAIL (7 / DB-S826)
SCALE: 3"=1'-0"

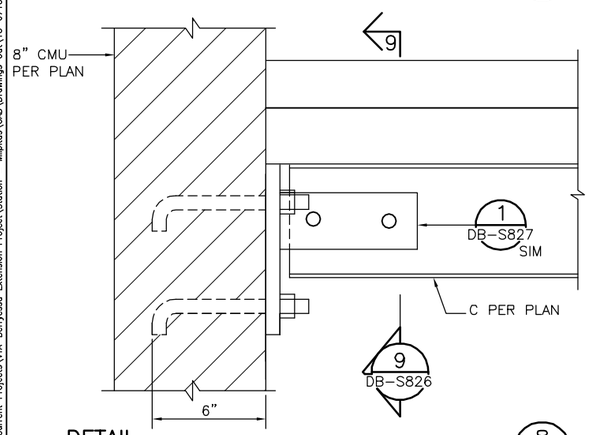

DETAIL (8 / DB-S826)
SCALE: 3"=1'-0"

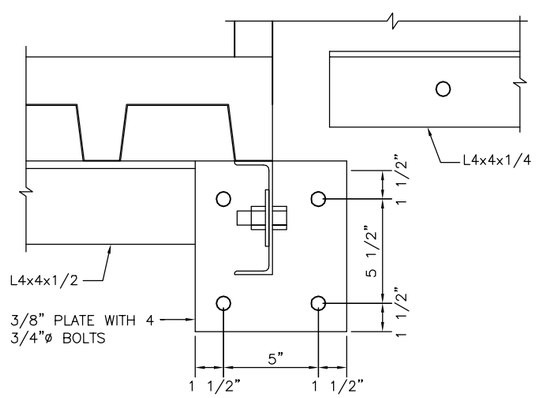

SECTION (9 / DB-S826)
SCALE: 3"=1'-0"

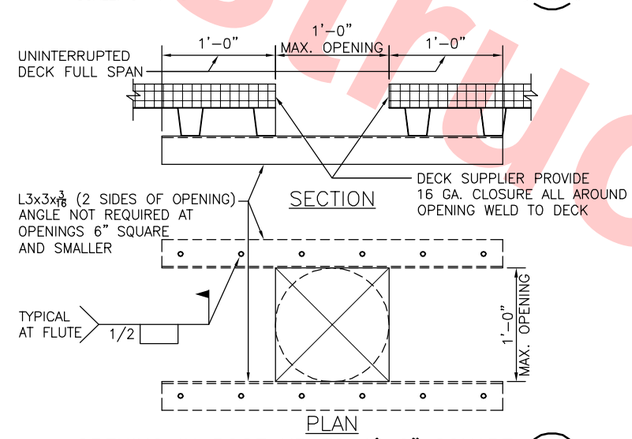

OPENING IN ROOF UP TO 1'-0" SQUARE (10 / DB-S826)
SCALE: 1 1/2"=1'-0"

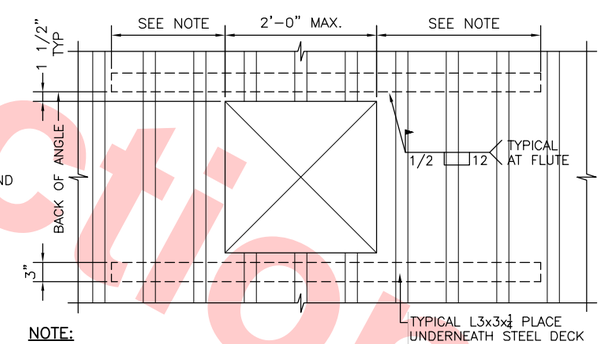

NOTE:

LENGTH OF TUBE OR ANGLE IS DETERMINED BY THE NUMBER OF WELDS PROVIDED AT BEARING FLUTES PAST EDGE OF OPENING. PROVIDE THE MINIMUM NUMBER OF WELDS PAST THE EDGE OF OPENINGS AS FOLLOWS
A. 3" DECK.....2 WELDS / B. 1 1/2" AND 2" DECK.....3 WELDS

OPENING IN ROOF (1'-0" – 2'-0" MAX.) (11 / DB-S826)
SCALE: 1"=1'-0"

Not For Construction

REV	DATE	BY	SUB	APP	DESCRIPTION
0	20130710				READINESS FOR CONSTRUCTION

DESIGNED BY E. MAMOYAC
DRAWN BY P. NG
CHECKED BY S. SENGUPTA
IN CHARGE R. BARLAAN
DATE 20130710

REGISTERED PROFESSIONAL ENGINEER EUGENIO R. MAMOYAC # 19409 EXP. 6/30/14 STRUCTURAL STATE OF CALIFORNIA

Skanska Shimmick Herzog
1436 California Circle Milpitas, California 95035
A Joint Venture

Anil Verma Associates, Inc. 1970 Broadway, Suite 525, Oakland, CA 94612 Phone: (510) 835-2537 Fax: (510) 835-2339
SUBMITTED

Lockwood, Andrews & Newnam, Inc. A CH2M HILL COMPANY
T·Y·LIN INTERNATIONAL
APPROVED

VTA BART SILICON VALLEY
BART SILICON VALLEY BERRYESSA EXTENSION

LINE, TRACK, STATIONS, AND SYSTEMS
DESIGN UNIT 023
ANCILLARY BUILDING

MISCELLANEOUS DETAILS

CADD FILENAME C700-S-DB-S826.dwg
SIZE D | SCALE AS NOTED
CONTRACT NO. C700 | REV. 0
AREA CODE DB | SHEET NO. S826 | PAGE NO. 0295

JosephG Jun 26, 2013 – 4:36pm G:\Current Projects\VTA-Berryessa Extension Project\Station – Milpitas\CAD\Drawings Out\13-0710 C700 Milpitas Station – RFC Submittal\C700-S-DB-S826.dwg

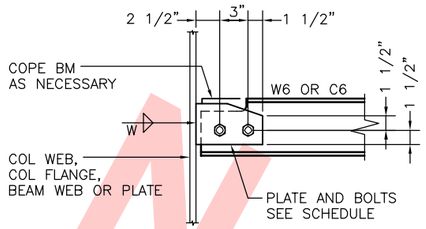

TYPICAL CONNECTION @ W6 AND C6

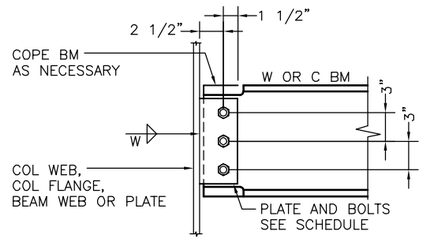

TYPICAL BEAM CONNECTION

AISC BEAM SIZE	A-325 N CONNECTORS	STIFFNER PL THICKNESS	FILLET WELD SIZE "W"
W6, 5 / C7, 6, 5	2 – 3/4" ø	3/8"	1/4"
W10, 8 / C10, 9	2 – 3/4" ø	3/8"	1/4"
W16, 14, 12 / C15, 13, 12	3 – 3/4" ø	3/8"	1/4"

BEAM SINGLE PLATE SHEAR CONNECTION 1 DB-S827
SCALE: 1 1/2"=1'-0"

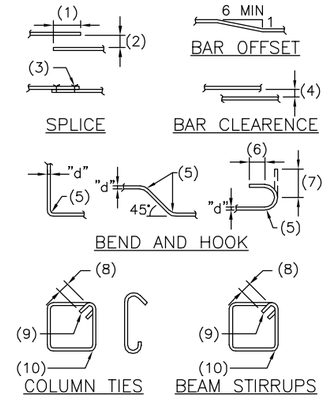

NOTES:

1. LAP – SEE GEN. STRUCT. NOTES
2. MAXIMUM 1/5 LAP BUT NOT MORE THAN 6"
3. WIRE TIES
4. 1d (1" MINIMUM)
5. RADIUS=3d FOR BARS NOT OVER #8; 4d FOR #9, #10 AND #11 BARS; 5d FOR #14 AND #18 BARS. 5d FOR ALL GRADE 40 BARS W/180 DEGREE HOOK.
6. 4d (4" MINIMUM).
7. 12d (90 DEGREE HOOK).
8. 6d (4" MINIMUM).
9. 135 DEGREE BEND.
10. BEND AROUND 1 1/2" PIN FOR #3 BARS. BEND AROUND 2" PIN FOR #4 BARS. BEND AROUND 2 1/2" PIN FOR #5 BARS.

REINFORCING BAR DETAILS 2 DB-S827
SCALE: NTS

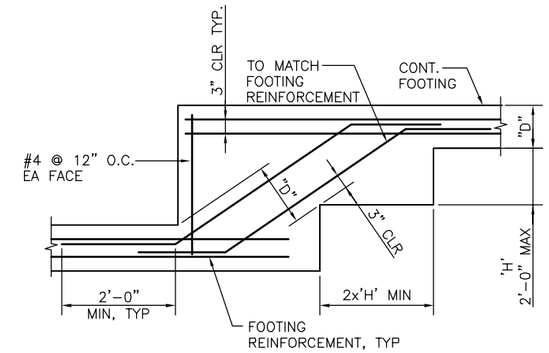

STEPPED FOOTING DETAIL 3 DB-S827
SCALE: 3/4"=1'-0"

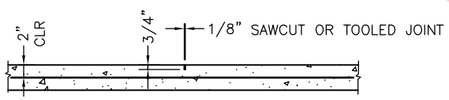

NOTE:

SAWCUTS TO SUBDIVIDE ALL FLOOR SLABS ON GRADE INTO AREAS OF 400 SQ. FT. OR LESS, AREAS TO BE SQUARE OR APPROX. SQUARE.

SAWCUT

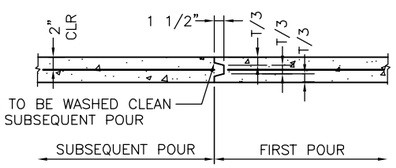

NOTE:

KEYED JOINT ADJACENT POURS TO BE MADE 8 HOURS APART.

KEYED JOINT – COLD JOINT

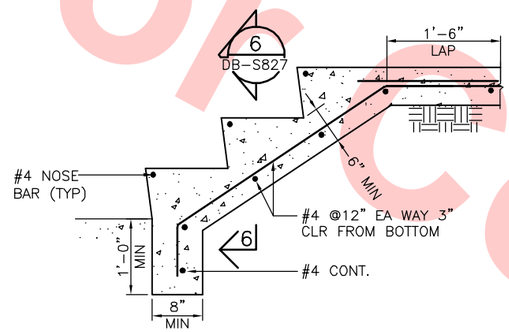

TYPICAL STAIR ON GRADE 5 DB-S827
SCALE: 1"=1'-0"

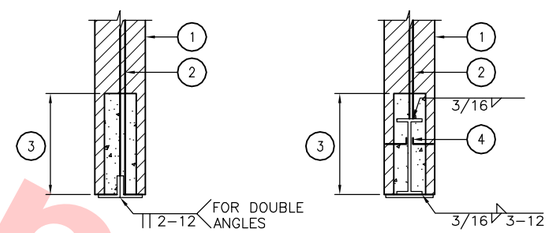

TYPE "A"
(DOUBLE ANGLE OR WT SHAPE)

TYPE "B"
(W SHAPE AND STEEL PLATE)

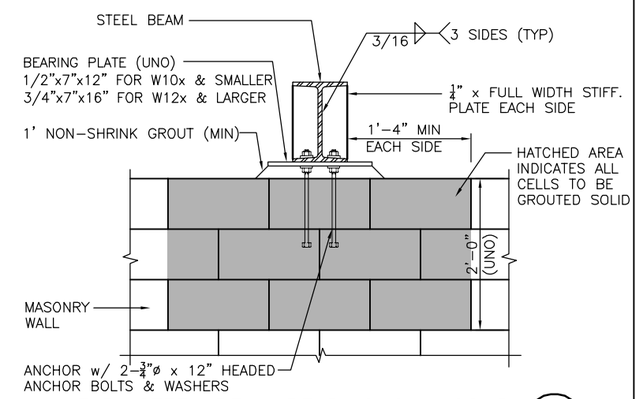

TYP. STEEL BEAM BEARING @ MASONRY 8 DB-S827
SCALE: 1"=1'-0"

Santa Clara Valley Transportation Authority

____NO EXCEPTIONS TAKEN (NET)
____MAKE CORRECTIONS NOTED (MCN)
____AMEND AND RESUBMIT (A/R)

Any action shown above is subject to the terms of the contract and does not relieve the Contractor of any of its obligations under the contract, including design and detailing.

Contract No.: DB11002F

By: _____ Date: _____

KEY NOTES:

1. MASONRY WALL – SEE PLAN FOR REINFORCING
2. DOWELS TO MATCH AND LAP VERTICAL BARS – WELD TO LINTEL AS SHOWN
3. SOLID GROUT FULL LENGTH OF LINTEL. GROUT DEPTH TO BE GREATER OF 1'-4" OR DEPTH OF LINTEL PLUS 4"
4. VENEER TIES @ 16" O.C. – TACK WELD TO LINTEL WEB

NOTES:

1. WHEN SPAN EXCEEDS 6'-0", SHORE LINTEL AT MIDSPAN
2. SEE LINTEL SCHEDULE FOR SIZE OF STEEL LINTELS
3. PROVIDE MIN. 5' BEARING EACH END.

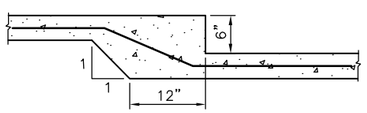

STEP

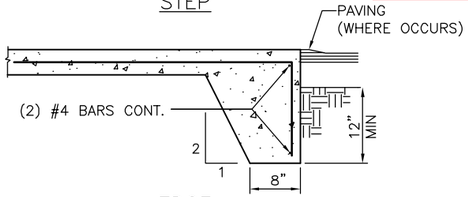

EDGE

SLAB ON GRADE DETAILS 4 DB-S827
SCALE: 1"=1'-0"

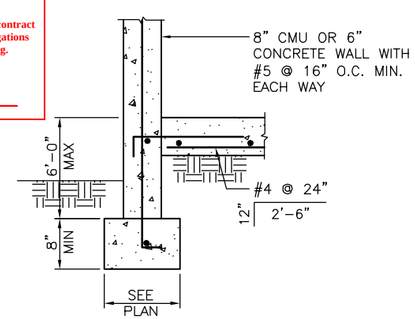

SECTION 6 DB-S827
SCALE: 1"=1'-0"

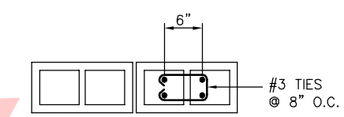

4 VERT BARS

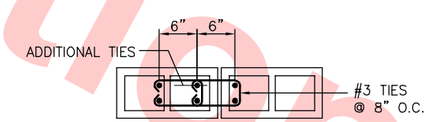

6 VERT BARS

TYPICAL STEEL LINTELS 7 DB-S827
SCALE: 1"=1'-0"

FLUSH PILASTER DETAIL 9 DB-S827
SCALE: 1"=1'-0"

Not For Construction

REV	DATE	BY	SUB	APP	DESCRIPTION
0	20130710				READINESS FOR CONSTRUCTION

DESIGNED BY E. MAMOYAC
DRAWN BY P. NG
CHECKED BY S. SENGUPTA
IN CHARGE R. BARLAAN
DATE 20130710

REGISTERED PROFESSIONAL ENGINEER EMPIRIO R. MAMOYAC # 6 9409 EXP.6/30/14 STRUCTURAL STATE OF CALIFORNIA

Skanska Shimmick Herzog
1436 California Circle
Milpitas, California 95035
A Joint Venture

Anil Verma Associates, Inc.
1970 Broadway, Suite 525, Oakland, CA 94612
Phone: (510) 835-2537 Fax: (510) 835-2339
SUBMITTED

Lockwood, Andrews & Newnam, Inc. A LEO A DALY COMPANY
T·Y·LIN INTERNATIONAL
APPROVED

VTA BART SILICON VALLEY
BART SILICON VALLEY BERRYESSA EXTENSION

LINE, TRACK, STATIONS, AND SYSTEMS
DESIGN UNIT 023
ANCILLARY BUILDING

MISCELLANEOUS DETAILS

CADD FILENAME C700-S-DB-S87.dwg
SIZE D | SCALE AS NOTED
CONTRACT NO. C700 | REV. 0
AREA CODE DB | SHEET NO. S827 | PAGE NO. 0296

JosephG Jun 26, 2013 – 4:37pm G:\Current Projects\VTA-Berryessa Extension Project\Station – Milpitas\CAD\Drawings Out\13-0710 C700 Milpitas Station – RFC Submit\C700-S-DB-S827.dwg

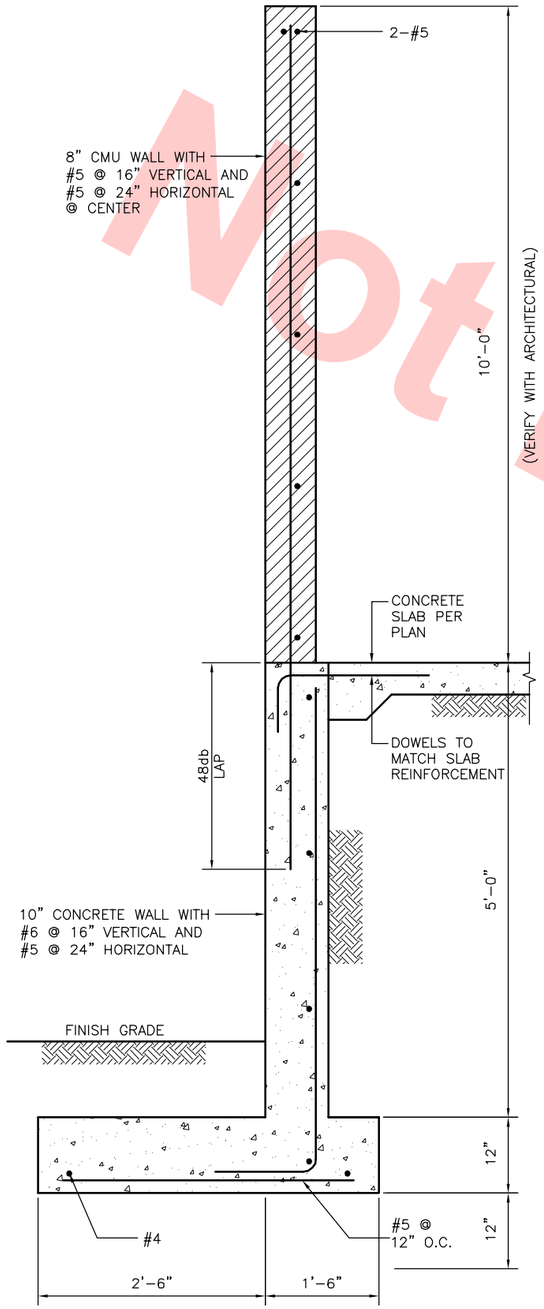

DETAIL 1
SCALE: 1"=1'-0"
DB-S828

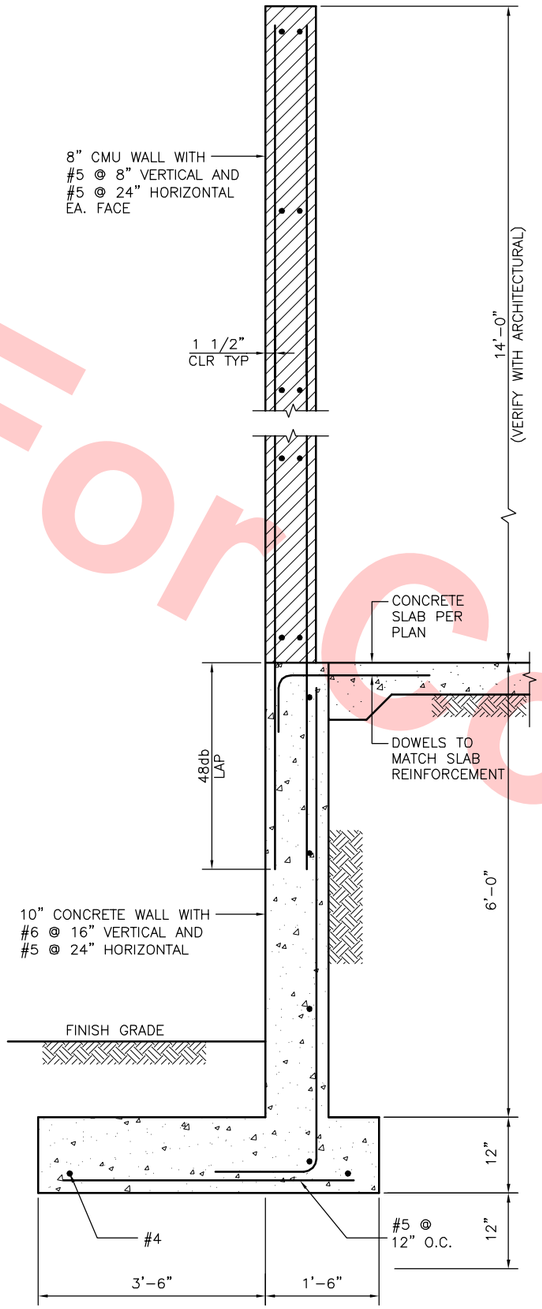

DETAIL 2
SCALE: 1"=1'-0"
DB-S828

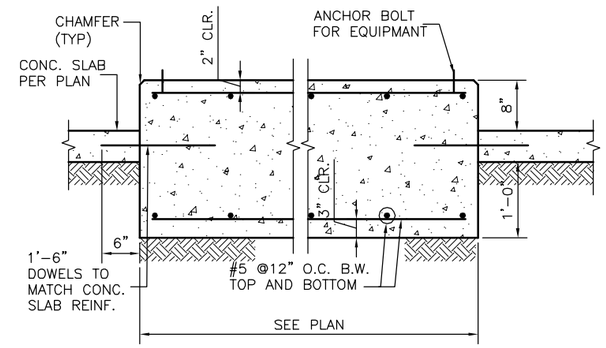

EQUIPMENT FOUNDATION 3
SCALE: 1"=1'-0"
DB-S828

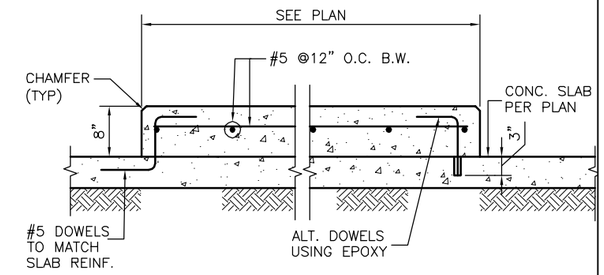

HOUSEKEEPING PAD 4
SCALE: 1"=1'-0"
DB-S828

Santa Clara Valley Transportation Authority

____NO EXCEPTIONS TAKEN (NET)
____MAKE CORRECTIONS NOTED (MCN)
____AMEND AND RESUBMIT (A/R)

Any action shown above is subject to the terms of the contract and does not relieve the Contractor of any of its obligations under the contract, including design and detailing.

Contract No.: DB11002F

By: _____ **Date:** _____

Not For Construction

REV	DATE	BY	SUB	APP	DESCRIPTION
0	20130710				READINESS FOR CONSTRUCTION

DESIGNED BY E. MAMOYAC
DRAWN BY P. NG
CHECKED BY S. SENGUPTA
IN CHARGE R. BARLAAN
DATE 20130710

REGISTERED PROFESSIONAL ENGINEER EMILIO R. MAMOYAC # 6 9409 EXP. 6/30/14 STRUCTURAL STATE OF CALIFORNIA

Skanska Shimmick Herzog
1436 California Circle
Milpitas, California 95035
A Joint Venture

Anil Verma Associates, Inc.
1970 Broadway, Suite 525 Oakland, CA 94612
Phone: (510) 835-2537 Fax: (510) 835-2339
SUBMITTED

Lockwood, Andrews & Newnam, Inc. A LEO A DALY COMPANY
T·Y·LIN INTERNATIONAL
APPROVED

BART SILICON VALLEY
BART SILICON VALLEY BERRYESSA EXTENSION

LINE, TRACK, STATIONS, AND SYSTEMS
DESIGN UNIT 023
ANCILLARY BUILDING

MISCELLANEOUS DETAILS

CADD FILENAME C700-S-DB-S828.dwg
SIZE D | SCALE AS NOTED
CONTRACT NO. C700 | REV. 0
AREA CODE DB | SHEET NO. S828 | PAGE NO. 0297

Jun 26, 2013 – 4:37pm G:\Current Projects\VTA-Berryessa Extension Project\Station – Milpitas\CAD\Drawings Out\13-0710 C700 Milpitas Station – RFC Submit\C700-S-DB-S828.dwg
JosephG

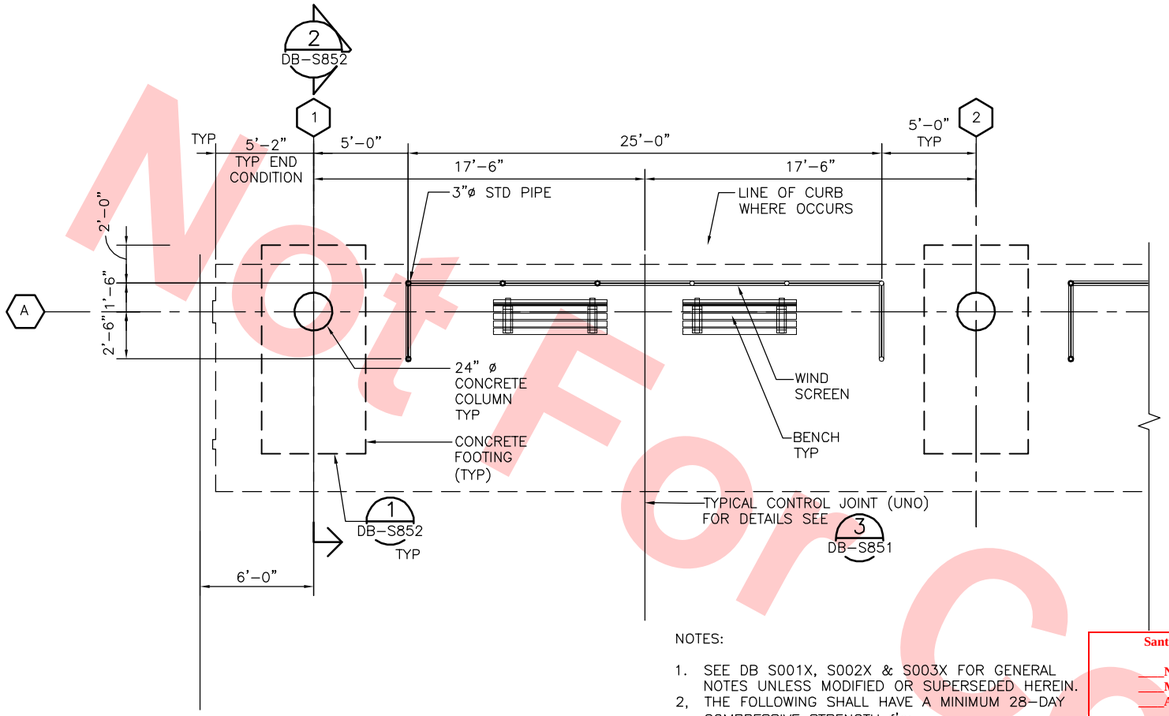

TYPICAL FOUNDATION PLAN 1 DB-S851

SCALE: 1/4"=1'-0"

NOTES:

1. SEE DB S001X, S002X & S003X FOR GENERAL NOTES UNLESS MODIFIED OR SUPERSEDED HEREIN.
2. THE FOLLOWING SHALL HAVE A MINIMUM 28-DAY COMPRESSIVE STRENGTH f'c:
   A. COLUMN 4,000 PSI
   B. FOUNDATION 3,000 PSI
   C. SLAB 2,000 PSI
3. ANCHOR BOLTS AT TOP OF CONC. SHALL BE ASTM 1554 GR 36
4. BASE PLATE AND OTHER STEEL PLATES SHALL BE ASTM A572 GR 50

Santa Clara Valley Transportation Authority

____NO EXCEPTIONS TAKEN (NET)
____MAKE CORRECTIONS NOTED (MCN)
____AMEND AND RESUBMIT (A/R)

Any action shown above is subject to the terms of the contract and does not relieve the Contractor of any of its obligations under the contract, including design and detailing.

Contract No.: DB11002F

By: _____ Date: _____

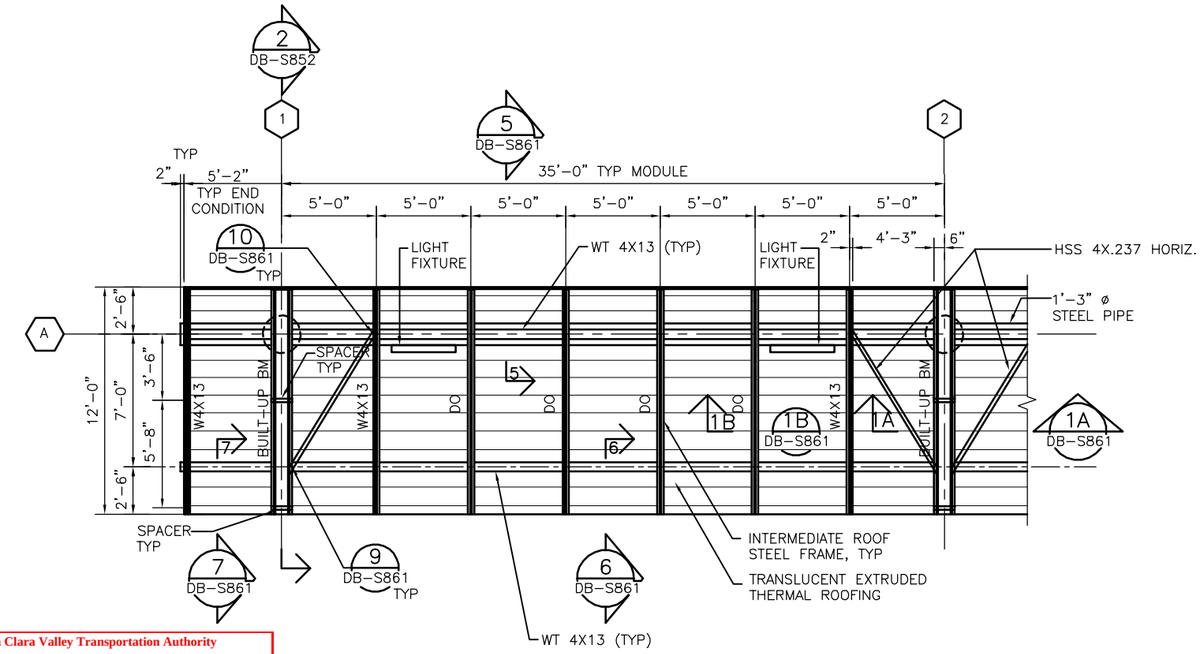

TYPICAL PARTIAL ROOF FRAMING PLAN 2 DB-S851

SCALE: 1/4"=1'-0"

1. CONCRETE STRENGTH AT 28 DAYS SHALL BE 2500 PSI. MAXIMUM SLUMP SHALL BE 4 INCHES.

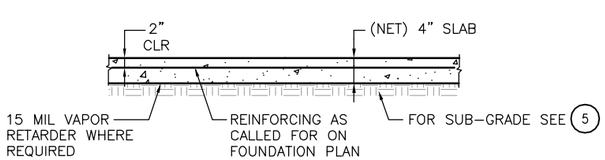

2 SLAB POUR SEQUENCE

POUR SLAB IN STRIPS 12'-0" WIDE OR IF LARGER STRIPS USED THEN PROVIDE ADDITIONAL CONTROL JOINTS PER 4

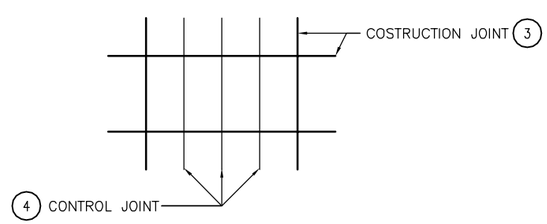

3 CONSTRUCTION JOINT

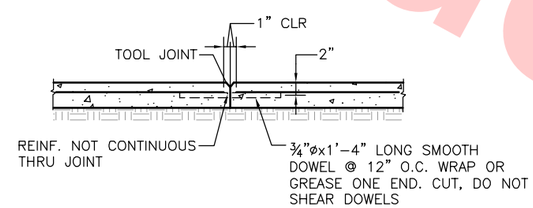

4 CONTROL JOINTS

PROVIDE CONTROL JOINTS AT A MAXIMUM OF 12 FT. CONTROL JOINTS SHALL BE PLACED PERPENDICULAR TO CONSTRUCTION JOINTS. 3/4" TO 1" 'SOFT-CUT' SAW CUT FILLED WITH A CEMENT GROUT AFTER 28 DAYS DRYING SAW CUT WITH A DIAMOND, WET BLADE.

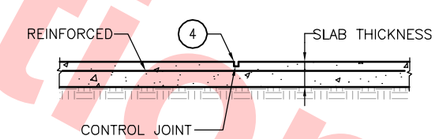

5. SLAB SUB GRADE SHALL BE COMPACTED TO A MINIMUM OF 90% WITH NO LOOSE SOIL ON TOP.
6. DO NOT PLACE CONCRETE WHEN THE TEMPERATURE EXCEEDS 90°F.
7. SLABS SHALL BE WET CURED FOR 7 DAYS MINIMUM.

TYP. CONC. SLAB ON GRADE 3 DB-S851

SCALE: NTS

Not For Construction

REV	DATE	BY	SUB	APP	DESCRIPTION
0	20130710				READINESS FOR CONSTRUCTION

DESIGNED BY E. MAMOYAC
DRAWN BY K. STEPANIAN
CHECKED BY S. SENGUPTA
IN CHARGE R. BARLAAN
DATE 20130710

REGISTERED PROFESSIONAL ENGINEER EUGENIO R. MAMOYAC # 6409 EXP. 6/30/14 STRUCTURAL STATE OF CALIFORNIA

Skanska Shimmick Herzog
1436 California Circle
Milpitas, California 95035
A Joint Venture

Anil Verma Associates, Inc.
1970 Broadway, Suite 525, Oakland, CA 94612
Phone: (510) 835-2537 Fax: (510) 835-2339

SUBMITTED

Lockwood, Andrews & Newnam, Inc. A LEO A DALY COMPANY
T·Y·LIN INTERNATIONAL

APPROVED

BART SILICON VALLEY
BART SILICON VALLEY BERRYESSA EXTENSION

LINE, TRACK, STATIONS, AND SYSTEMS
DESIGN UNIT 023
TRANSIT CENTER BUS SHELTER

BUS CANOPY
FOUNDATION AND ROOF FRAMING PLAN

CADD FILENAME C700-S-DB-S851.dwg
SIZE D | SCALE AS NOTED
CONTRACT NO. C700 | REV. 0
AREA CODE DB | SHEET NO. S851 | PAGE NO. 0298

JosephG Jun 26, 2013 – 4:48pm G:\Current Projects\VTA-Berryessa Extension Project\Station – Milpitas\CAD\Drawings Out\13-0710 C700 Milpitas Station – RFC Submit\C700-S-DB-S851.dwg

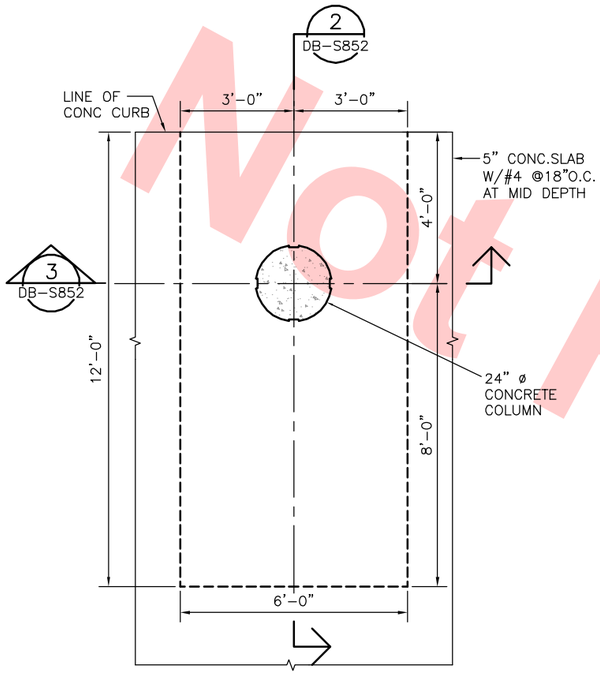

CANOPY FOUNDATION DETAIL (1 / DB-S852)

SCALE: 1/2" = 1'-0"

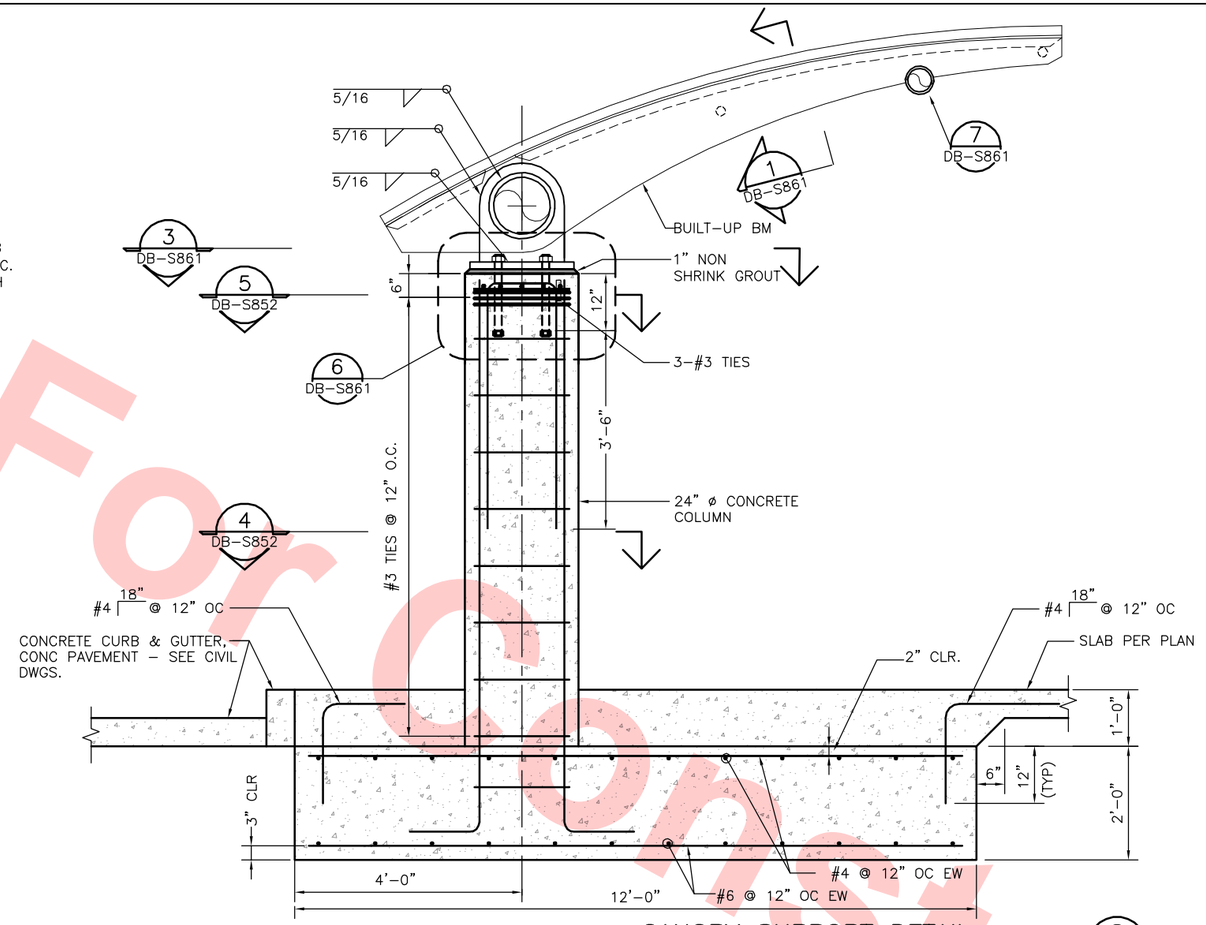

CANOPY SUPPORT DETAIL (2 / DB-S852)

SCALE: 3/4" = 1'-0"

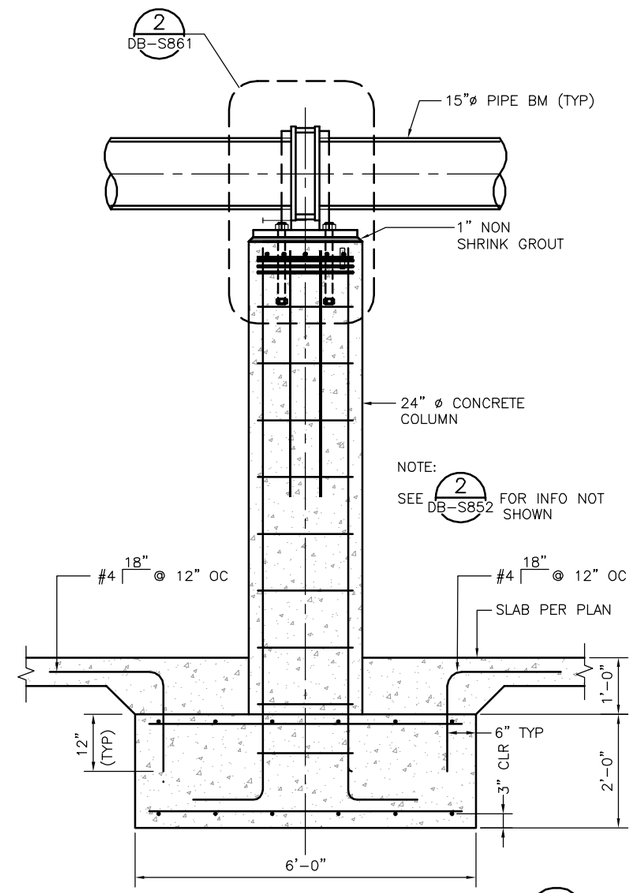

SECTION (3 / DB-S852)

SCALE: 3/4" = 1'-0"

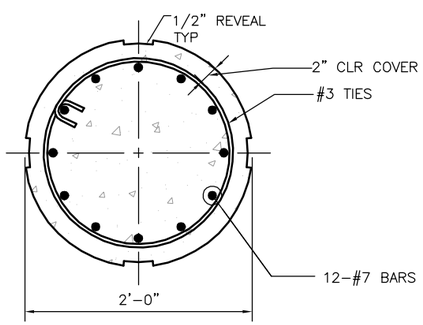

SECTION (4 / DB-S852)

SCALE: 1 1/2" = 1'-0"

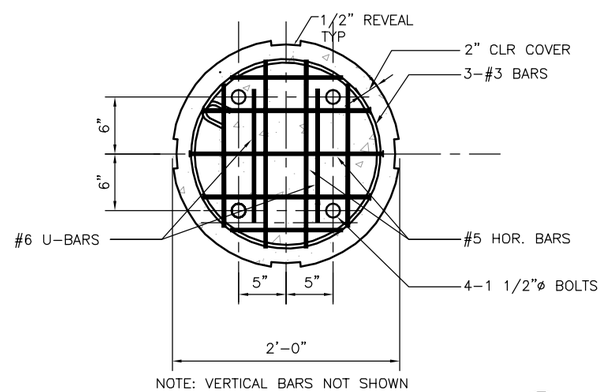

SECTION (5 / DB-S852)

SCALE: 1 1/2" = 1'-0"

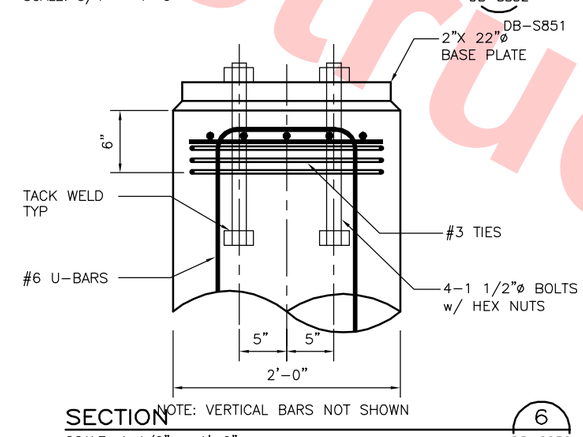

SECTION (6 / DB-S852)

SCALE: 1 1/2" = 1'-0"

Santa Clara Valley Transportation Authority

____NO EXCEPTIONS TAKEN (NET)
____MAKE CORRECTIONS NOTED (MCN)
____AMEND AND RESUBMIT (A/R)

Any action shown above is subject to the terms of the contract and does not relieve the Contractor of any of its obligations under the contract, including design and detailing.

Contract No.: DB11002F

By: _____ Date: _____

Not For Construction

REV	DATE	BY	SUB	APP	DESCRIPTION
0	20130710				READINESS FOR CONSTRUCTION

DESIGNED BY E. MAMOYAC
DRAWN BY S. DE GUZMAN
CHECKED BY S. SENGUPTA
IN CHARGE R. BARLAAN
DATE 20130710

REGISTERED PROFESSIONAL ENGINEER EDGARDO R. MAMOYAC # 6409 EXP. 6/30/14 STRUCTURAL STATE OF CALIFORNIA

Skanska Shimmick Herzog
1436 California Circle
Milpitas, California 95035
A Joint Venture

Anil Verma Associates, Inc.
1970 Broadway, Suite 525, Oakland, CA 94612
Phone: (510) 835-2537 Fax: (510) 835-2339
SUBMITTED

Lockwood, Andrews & Newnam, Inc. A LEO A DALY COMPANY
T·Y·LIN INTERNATIONAL
APPROVED

NOT FOR CONSTRUCTION

VTA BART SILICON VALLEY
BART SILICON VALLEY BERRYESSA EXTENSION

LINE, TRACK, STATIONS, AND SYSTEMS DESIGN UNIT 023
TRANSIT CENTER BUS SHELTER

BUS CANOPY
FOUNDATION AND SECTION DETAILS

CADD FILENAME C700-S-DB-S852.dwg
SIZE D | SCALE AS NOTED
CONTRACT NO. C700 | REV. 0
AREA CODE DB | SHEET NO. S852 | PAGE NO. 0299

JosephG Jun 26, 2013 - 4:49pm G:\Current Projects\VTA-Berryessa Extension Project\Station - Milpitas\CAD\Drawings Out\13-0710 C700 Milpitas Station - RFC Submittal\C700-S-DB-S852.dwg

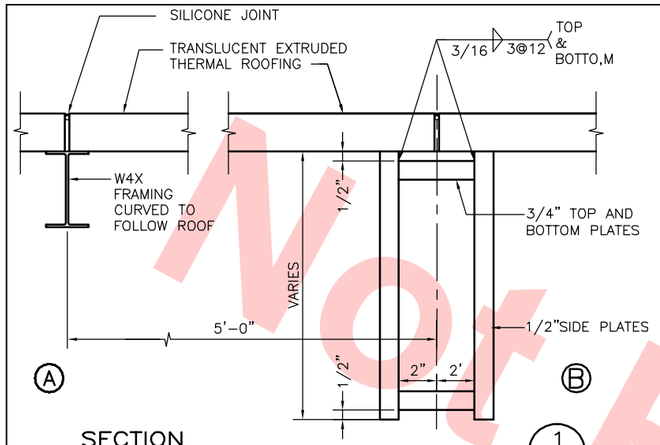

SECTION 1 DB-S861 DB-S851
SCALE: 3" = 1'-0"

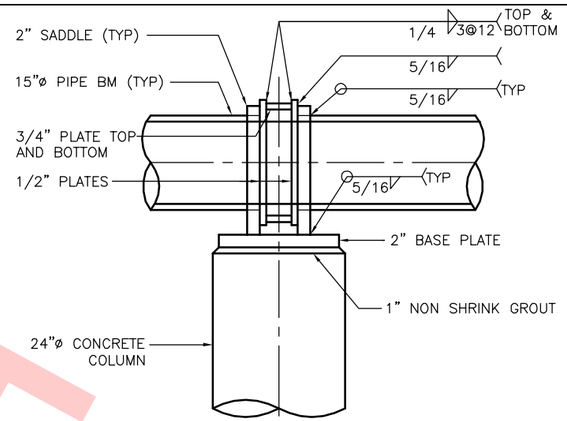

DETAIL 2 DB-S861 DB-S852
SCALE: 1 1/2" = 1'-0"

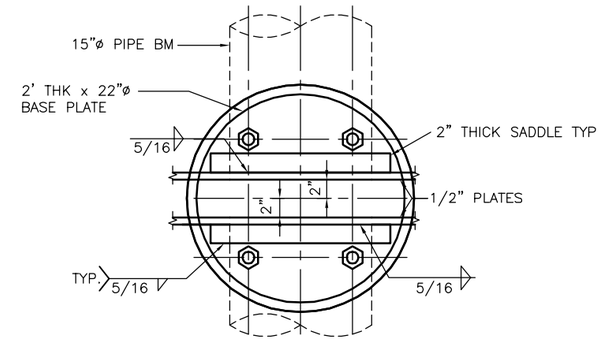

PLAN 3 DB-S861 DB-S852
SCALE: 1 1/2" = 1'-0"

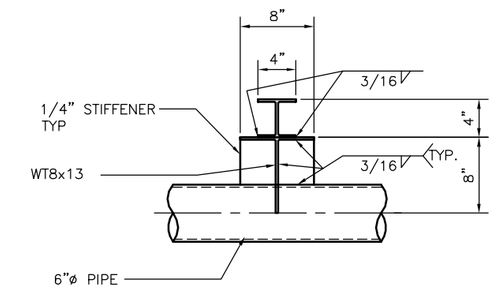

DETAIL 4 DB-S861
SCALE: 1 1/2" = 1'-0"

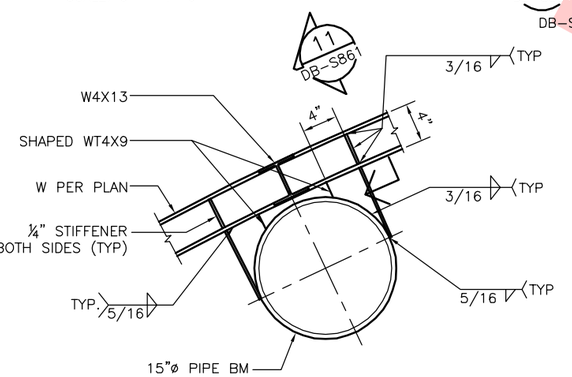

SECTION 5 DB-S861 DB-S851
SCALE: 1 1/2" = 1'-0"

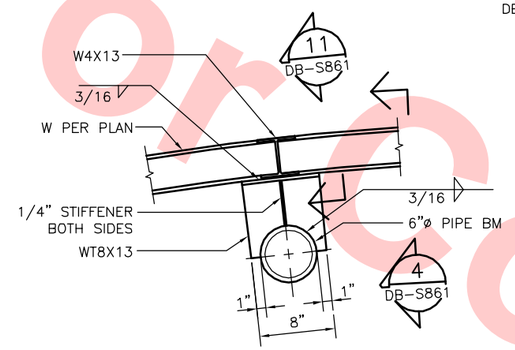

SECTION 6 DB-S861 DB-S851
SCALE: 1 1/2" = 1'-0"

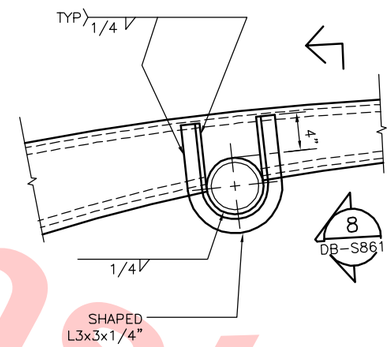

SECTION 7 DB-S861 DB-S851
SCALE: 1 1/2" = 1'-0"

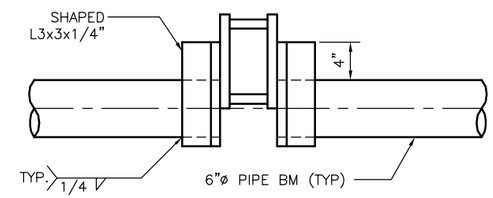

SECTION 8 DB-S861
SCALE: 1 1/2" = 1'-0"

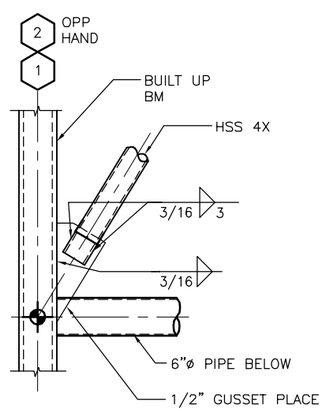

DETAIL 9 DB-S861
SCALE: 1" = 1'-0"

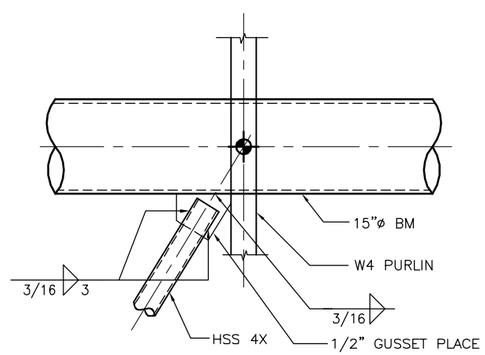

DETAIL 10 DB-S861
SCALE: 1" = 1'-0"

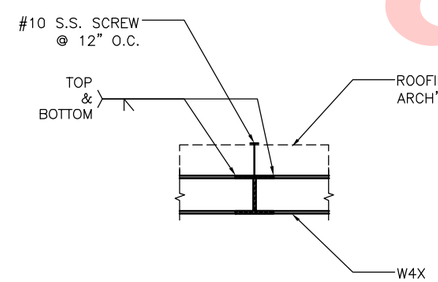

DETAIL 11 DB-S861
SCALE: 1" = 1'-0"

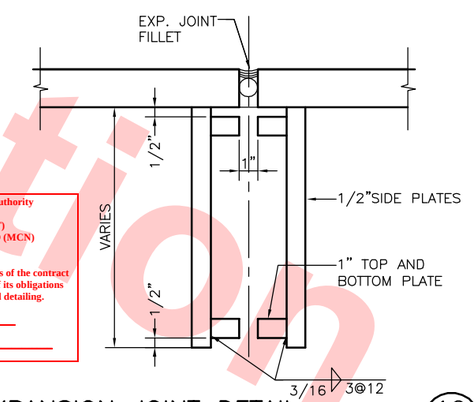

EXPANSION JOINT DETAIL 12 DB-S861
SCALE: 3" = 1'-0"

Santa Clara Valley Transportation Authority

___NO EXCEPTIONS TAKEN (NET)
___MAKE CORRECTIONS NOTED (MCN)
___AMEND AND RESUBMIT (A/R)

Any action shown above is subject to the terms of the contract and does not relieve the Contractor of any of its obligations under the contract, including design and detailing.

Contract No.: DB11002F

By: _____ Date: _____

Not For Construction

REV	DATE	BY	SUB	APP	DESCRIPTION
0	20130710				READINESS FOR CONSTRUCTION

DESIGNED BY E. MAMOYAC
DRAWN BY K. STEPANIAN
CHECKED BY S. SENGUPTA
IN CHARGE R. BARLAAN
DATE 20130710

REGISTERED PROFESSIONAL ENGINEER EUGENIO R. MAMOYAC # 6409 EXP. 6/30/14 STRUCTURAL STATE OF CALIFORNIA

Skanska Shimmick Herzog
1436 California Circle
Milpitas, California 95035
A Joint Venture

Anil Verma Associates, Inc.
1970 Broadway, Suite 535 Oakland, CA 94612
Phone: (510) 835-2537 Fax: (510) 535-2339

Lockwood, Andrews & Newnam, Inc. A LAN & BALY COMPANY
T·Y·LIN INTERNATIONAL

SUBMITTED _____
APPROVED _____

VTA BART SILICON VALLEY
BART SILICON VALLEY BERRYESSA EXTENSION

LINE, TRACK, STATIONS, AND SYSTEMS
DESIGN UNIT 023
TRANSIT CENTER BUS SHELTER

BUS CANOPY
MISCELLANEOUS DETAILS

CADD FILENAME C700-S-DB-S861.dwg
SIZE D | SCALE AS NOTED
CONTRACT NO. C700 | REV. 0
AREA CODE DB | SHEET NO. S861 | PAGE NO. 0300

JosephG Jun 26, 2013 - 4:49pm G:\Current Projects\VTA-Berryessa Extension Project\Station - Milpitas\CAD\Drawings Out\13-0710 C700 Milpitas Station - RFC Submit\C700-S-DB-S861.dwg

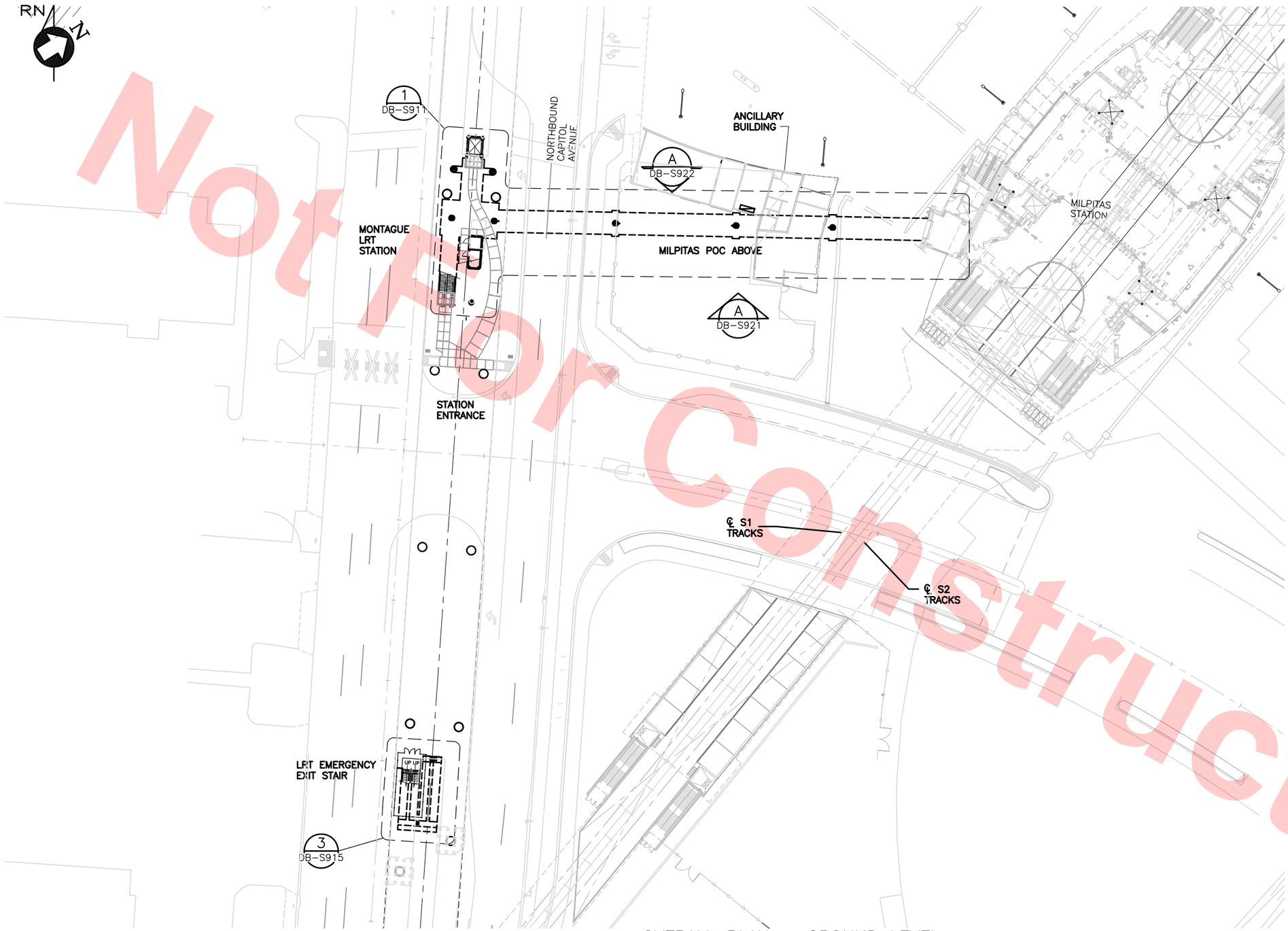

OVERALL PLAN – GROUND LEVEL

SCALE: 1/32"=1'-0"

Not For Construction

Santa Clara Valley Transportation Authority

____NO EXCEPTIONS TAKEN (NET)
____MAKE CORRECTIONS NOTED (MCN)
____AMEND AND RESUBMIT (A/R)

Any action shown above is subject to the terms of the contract and does not relieve the Contractor of any of its obligations under the contract, including design and detailing.

Contract No.: DB11002F

By: _____ Date: _____

32' 0' 32' 64'

GRAPHIC SCALE

KEY PLAN

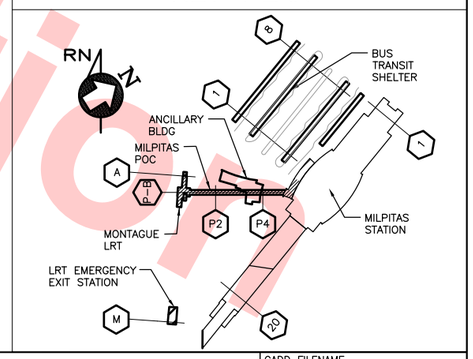

REV	DATE	BY	SUB	APP	DESCRIPTION
0	20130710				READINESS FOR CONSTRUCTION

DESIGNED BY J. DUNLEA
DRAWN BY J. DUNLEA
CHECKED BY S. DEBNATH
IN CHARGE R. BARLAAN
DATE 20130710

REGISTERED PROFESSIONAL ENGINEER JOHN W. DUNLEA No. S 2932 Exp. 6-30-14 STRUCTURAL STATE OF CALIFORNIA

Skanska Shimmick Herzog
1436 California Circle
Milpitas, California 95035
A Joint Venture

Anil Verma Associates, Inc.
1970 Broadway, Suite 525 Oakland, CA 94612
Phone: (510) 835-2537 Fax: (510) 835-2339

Lockwood, Andrews & Newnam, Inc. A LEO A DALY COMPANY
T·Y·LIN INTERNATIONAL

SUBMITTED _____
APPROVED _____

VTA BART SILICON VALLEY

BART SILICON VALLEY BERRYESSA EXTENSION

LINE, TRACK, STATIONS AND SYSTEMS
DESIGN UNIT 023
MONTAGUE LRT AND MILPITAS POC

OVERALL PLAN
GROUND LEVEL

CADD FILENAME C700-S-DB-S900.dwg
SIZE D | SCALE 1/32"=1'-0"
CONTRACT NO. C700 | REV. 0
AREA CODE DB | SHEET NO. S900 | PAGE NO. 0301

lurnar Jun 28, 2013 – 12:27pm C:\projectwise\copy of copy of mbx-template (5) (1)\dms60946\C700-S-DB-S900.dwg

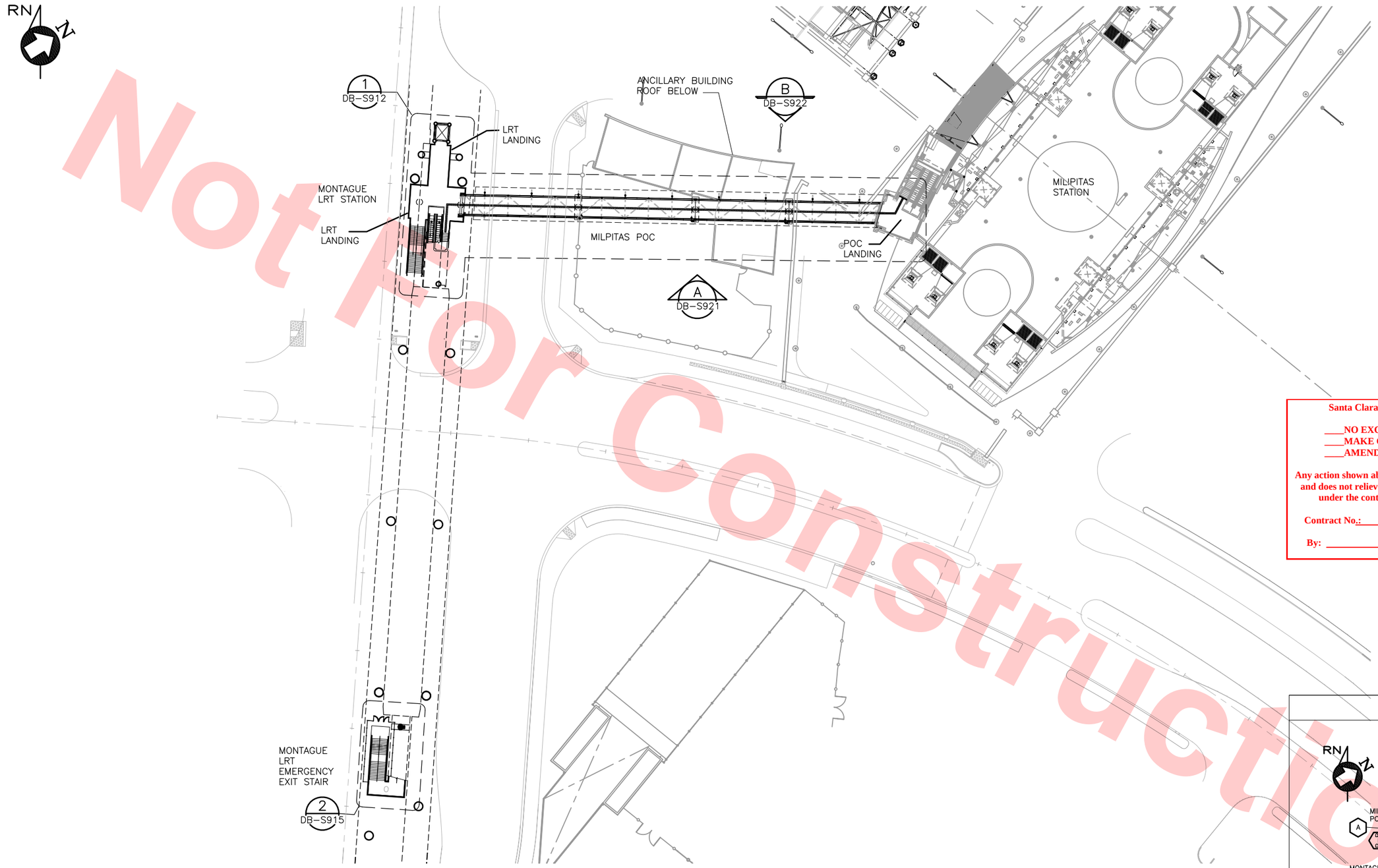

OVERALL PLAN – POC LEVEL

SCALE: 1/32"=1'-0"

32' 0' 32' 64'

GRAPHIC SCALE

Not For Construction

Santa Clara Valley Transportation Authority

____NO EXCEPTIONS TAKEN (NET)
____MAKE CORRECTIONS NOTED (MCN)
____AMEND AND RESUBMIT (A/R)

Any action shown above is subject to the terms of the contract and does not relieve the Contractor of any of its obligations under the contract, including design and detailing.

Contract No.: DB11002F

By: _____ Date: _____

KEY PLAN

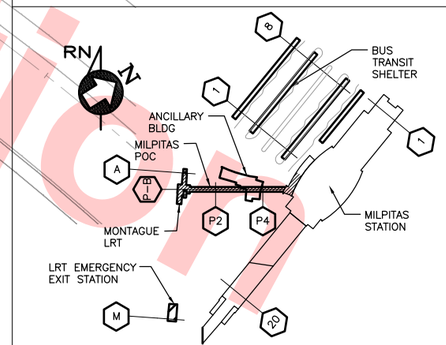

REV	DATE	BY	SUB	APP	DESCRIPTION
0	20130710				READINESS FOR CONSTRUCTION

DESIGNED BY J. DUNLEA
DRAWN BY J. DUNLEA
CHECKED BY S. DEBNATH
IN CHARGE R. BARLAAN
DATE 20130710

REGISTERED PROFESSIONAL ENGINEER JOHN H. DUNLEA No. S 4932 Exp. 6-30-14 STRUCTURAL STATE OF CALIFORNIA

Skanska Shimmick Herzog
1436 California Circle
Milpitas, California 95035
A Joint Venture

Anil Verma Associates, Inc.
1970 Broadway, Suite 225 Oakland, CA 94612
Phone: (510) 835-2537 Fax: (510) 835-2339

Lockwood, Andrews & Newnam, Inc. A LEO A DALY COMPANY
T·Y·LIN INTERNATIONAL

SUBMITTED _____ APPROVED _____

VTA BART SILICON VALLEY

BART SILICON VALLEY BERRYESSA EXTENSION

LINE, TRACK, STATIONS AND SYSTEMS
DESIGN UNIT 023
MONTAGUE LRT AND MILPITAS POC

OVERALL PLAN
POC LEVEL

CADD FILENAME C700-S-DB-S901.dwg
SIZE D | SCALE 1/32"=1'-0"
CONTRACT NO. C700 | REV. 0
AREA CODE DB | SHEET NO. S901 | PAGE NO. 0302

lumar Jun 28, 2013 – 12:31pm C:\projectwise\copy of copy of mbx-template (5) (1)\dms60946\C700-S-DB-S901.dwg

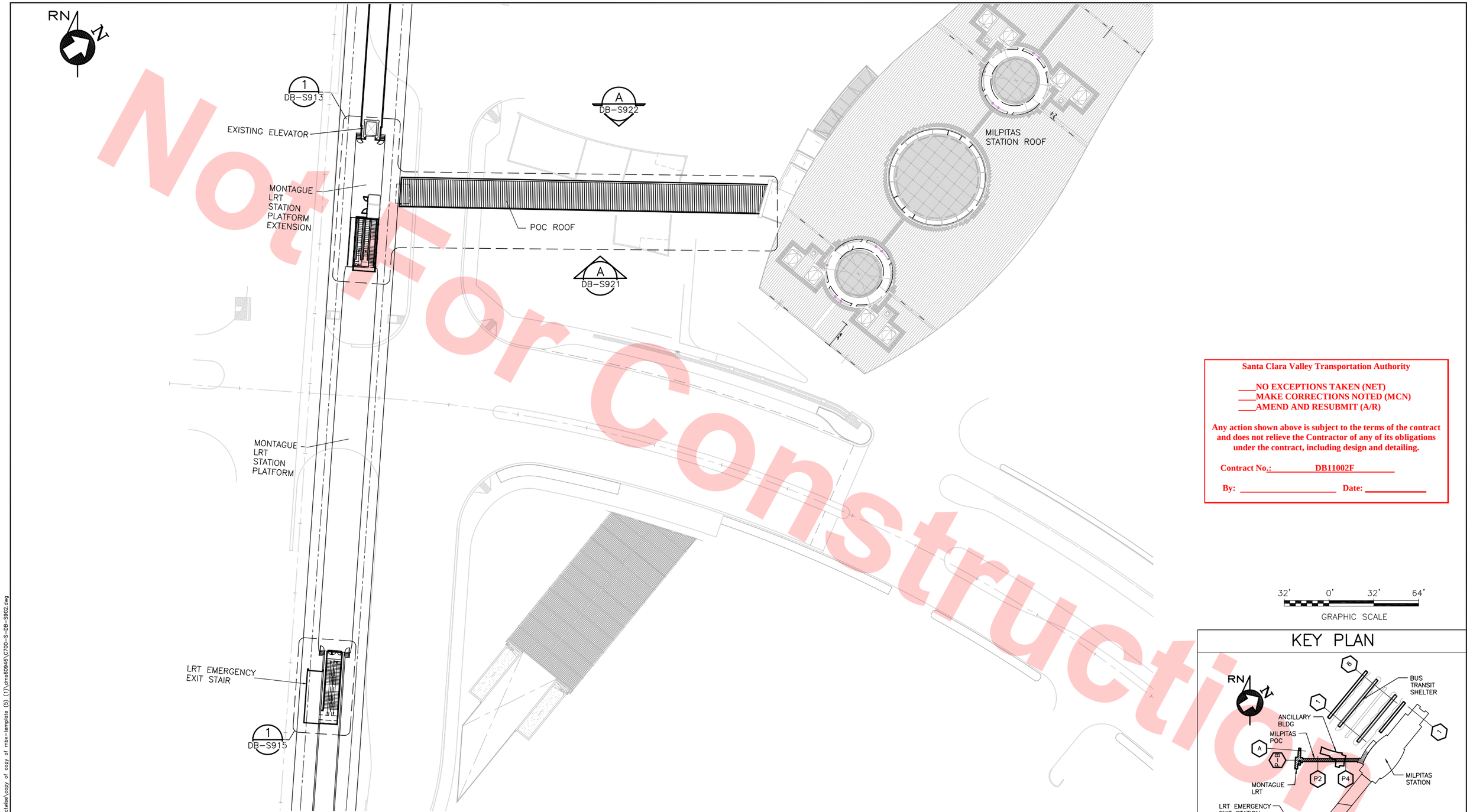

Not For Construction

Santa Clara Valley Transportation Authority

____NO EXCEPTIONS TAKEN (NET)
____MAKE CORRECTIONS NOTED (MCN)
____AMEND AND RESUBMIT (A/R)

Any action shown above is subject to the terms of the contract and does not relieve the Contractor of any of its obligations under the contract, including design and detailing.

Contract No.: DB11002F

By: _____ Date: _____

OVERALL PLAN – LRT PLATFORM / POC ROOF LEVEL PLAN

SCALE: 1/32"=1'-0"

REV	DATE	BY	SUB	APP	DESCRIPTION
0	20130710				READINESS FOR CONSTRUCTION

DESIGNED BY J. DUNLEA
DRAWN BY J. DUNLEA
CHECKED BY S. DEBNATH
IN CHARGE R. BARLAAN
DATE 20130710

REGISTERED PROFESSIONAL ENGINEER JOHN H. DUNLEA No. S 2932 Exp. 6-30-14 STRUCTURAL STATE OF CALIFORNIA

Skanska Shimmick Herzog
1436 California Circle
Milpitas, California 95035
A Joint Venture

Anil Verma Associates, Inc.
1970 Broadway, Suite 525 Oakland, CA 94612
Phone: (510) 835-2537 Fax: (510) 835-2339

SUBMITTED

Lockwood, Andrews & Newnam, Inc. A CH2M HILL COMPANY
T·Y·LIN INTERNATIONAL

APPROVED

VTA BART SILICON VALLEY

BART SILICON VALLEY BERRYESSA EXTENSION

LINE, TRACK, STATIONS AND SYSTEMS
DESIGN UNIT 023
MONTAGUE LRT AND MILPITAS POC

OVERALL PLAN
LRT PLATFORM /POC ROOF LEVEL

CADD FILENAME C700-S-DB-S902.dwg
SIZE D | SCALE 1/32"=1'-0"
CONTRACT NO. C700 | REV. 0
AREA CODE DB | SHEET NO. S902 | PAGE NO. 0303

lunar Jun 28, 2013 – 12:32pm C:\projectwise\copy of copy of mbx-template (5) (1)\dms60946\C700-S-DB-S902.dwg

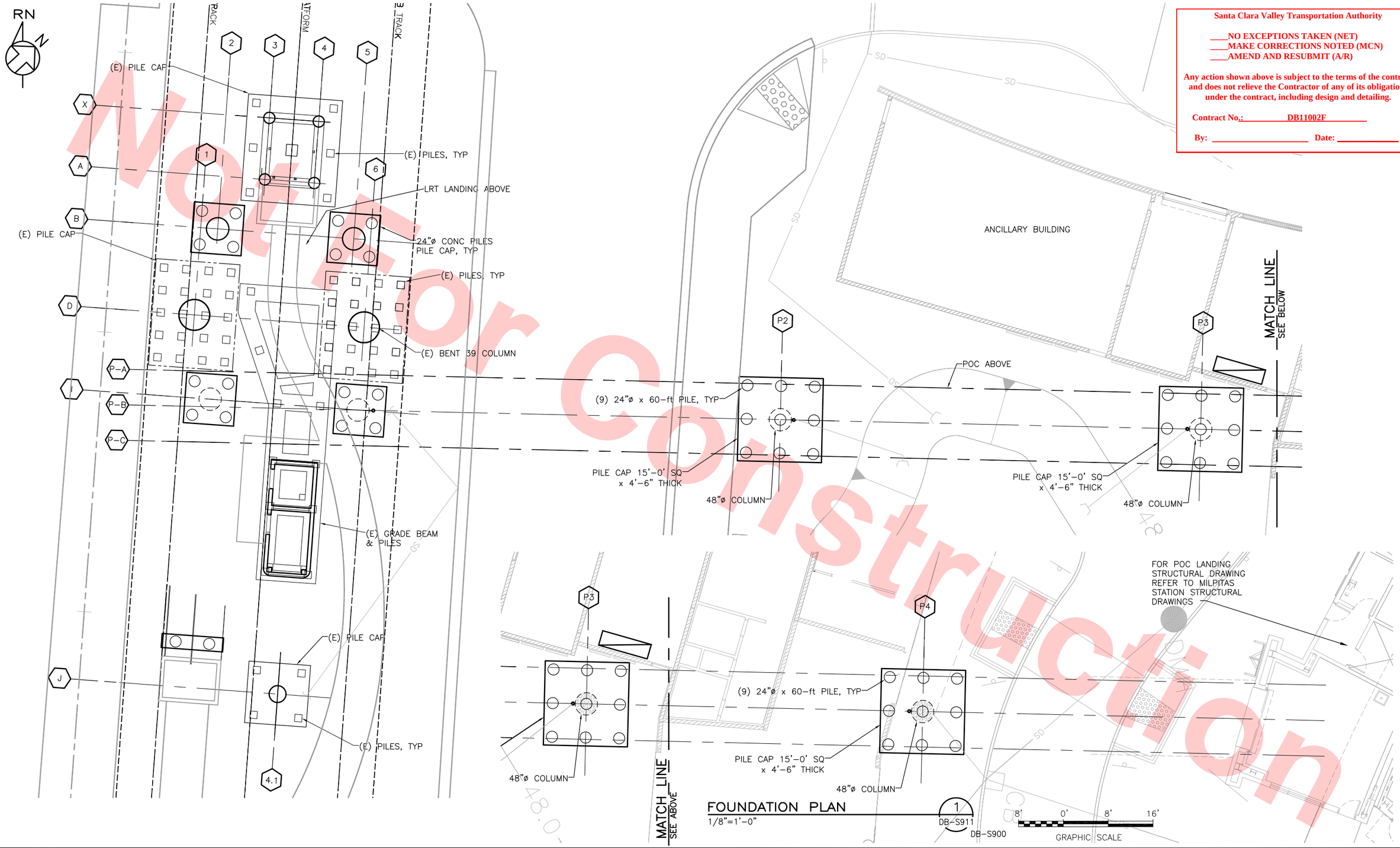

Not For Construction

Santa Clara Valley Transportation Authority

____NO EXCEPTIONS TAKEN (NET)
____MAKE CORRECTIONS NOTED (MCN)
____AMEND AND RESUBMIT (A/R)

Any action shown above is subject to the terms of the contract and does not relieve the Contractor of any of its obligations under the contract, including design and detailing.

Contract No.: DB11002F

By: _____ Date: _____

FOUNDATION PLAN

1/8"=1'-0"

1 / DB-S911 / DB-S900

REV	DATE	BY	SUB	APP	DESCRIPTION
0	20130710				READINESS FOR CONSTRUCTION

DESIGNED BY J. DUNLEA
DRAWN BY J. DUNLEA
CHECKED BY S. DEBNATH
IN CHARGE R. BARLAAN
DATE 20130710

REGISTERED PROFESSIONAL ENGINEER JOHN H. DUNLEA NO. S 2932 Exp. 6-30-14 STRUCTURAL STATE OF CALIFORNIA

Skanska Shimmick Herzog
1436 California Circle
Milpitas, California 95035
A Joint Venture

Anil Verma Associates, Inc.
1970 Broadway, Suite 525
Oakland, CA 94612
Phone: (510) 835-2537 Fax: (510) 535-2339

Lockwood, Andrews & Newnam, Inc. A LEO A DALY COMPANY
T·Y·LIN INTERNATIONAL

SUBMITTED _____ APPROVED _____

VTA BART SILICON VALLEY
BART SILICON VALLEY BERRYESSA EXTENSION

LINE, TRACK, STATIONS AND SYSTEMS
DESIGN UNIT 023
MONTAGUE LRT AND MILPITAS POC

FOUNDATION PLAN

CADD FILENAME		
C700-S-DB-S911.dwg		
SIZE D	SCALE 1/8"=1'-0"	
CONTRACT NO. C700		REV. 0
AREA CODE DB	SHEET NO. S911	PAGE NO. 0304

lumar Jun 28, 2013 - 12:35pm C:\projectwise\copy of copy of mbx-template (5) (1)\dms60946\C700-S-DB-S911.dwg

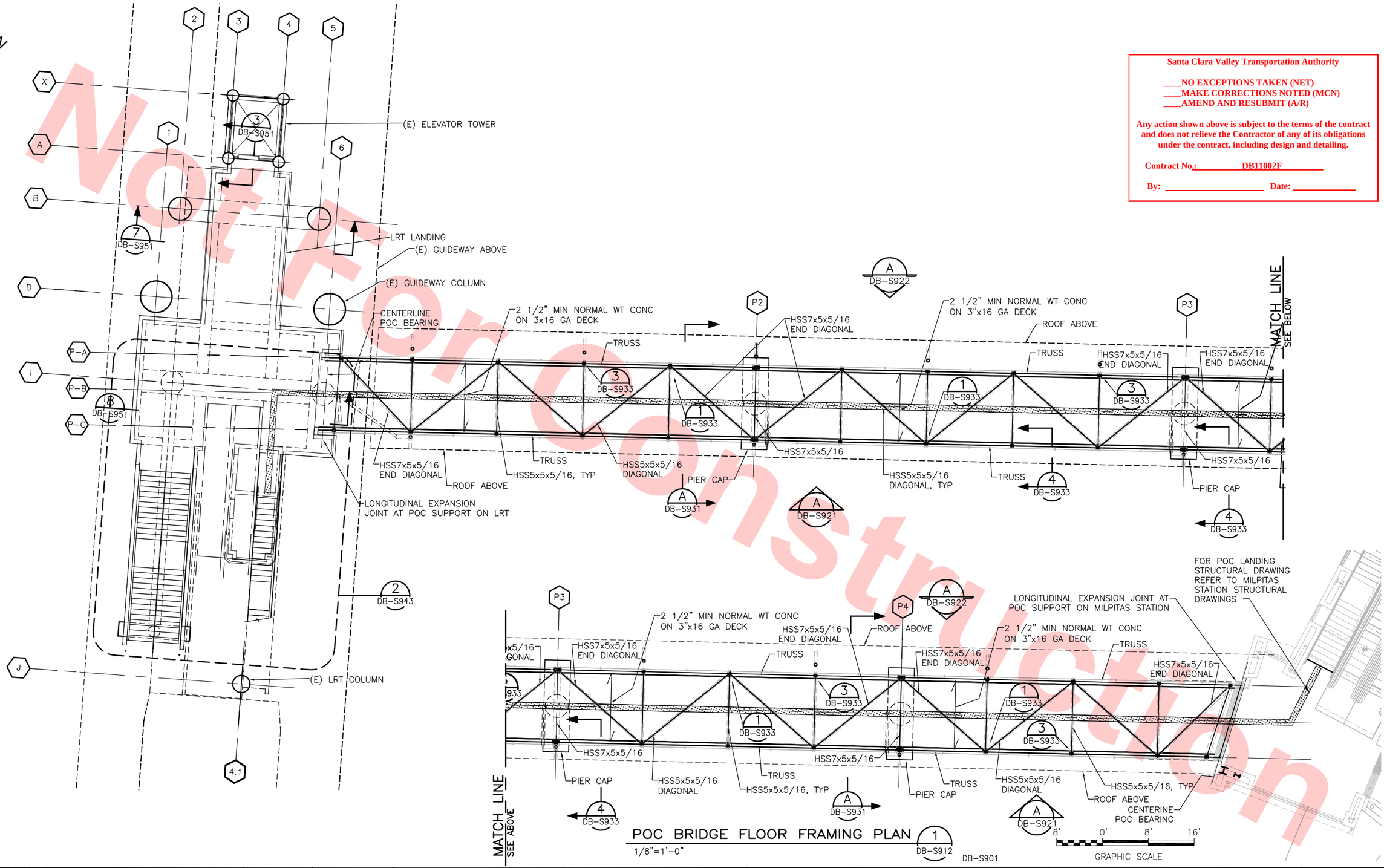

POC BRIDGE FLOOR FRAMING PLAN (1 / DB-S912)

1/8"=1'-0"

DB-S901

Not For Construction

Santa Clara Valley Transportation Authority

____NO EXCEPTIONS TAKEN (NET)
____MAKE CORRECTIONS NOTED (MCN)
____AMEND AND RESUBMIT (A/R)

Any action shown above is subject to the terms of the contract and does not relieve the Contractor of any of its obligations under the contract, including design and detailing.

Contract No.: DB11002F

By: _____ Date: _____

REV	DATE	BY	SUB	APP	DESCRIPTION
0	20130710				READINESS FOR CONSTRUCTION

DESIGNED BY J. DUNLEA
DRAWN BY J. DUNLEA
CHECKED BY S. DEBNATH
IN CHARGE R. BARLAAN
DATE 20130710

REGISTERED PROFESSIONAL ENGINEER — PHIL H. DINLEA — No. S 2932 — Exp. 6-30-14 — STRUCTURAL — STATE OF CALIFORNIA

Skanska Shimmick Herzog
1436 California Circle
Milpitas, California 95035
A Joint Venture

Anil Verma Associates, Inc.
1970 Broadway, Suite 535 Oakland, CA 94612
Phone: (510) 835-2537 Fax: (510) 835-2339

SUBMITTED

Lockwood, Andrews & Newnam, Inc. — A LAN & RALY COMPANY
T·Y·LIN INTERNATIONAL

APPROVED

VTA BART SILICON VALLEY
BART SILICON VALLEY BERRYESSA EXTENSION

LINE, TRACK, STATIONS AND SYSTEMS
DESIGN UNIT 023
MONTAGUE LRT AND MILPITAS POC

POC BRIDGE FLOOR FRAMING PLAN

CADD FILENAME C700-S-DB-S912.dwg
SIZE D | SCALE 1/8"=1'-0"
CONTRACT NO. C700 | REV. 0
AREA CODE DB | SHEET NO. S912 | PAGE NO. 0305

lunar Jun 28, 2013 – 12:37pm C:\projectwise\copy of copy of mbx-template (5) (1)\dms60946\C700-S-DB-S912.dwg

Santa Clara Valley Transportation Authority

____NO EXCEPTIONS TAKEN (NET)
____MAKE CORRECTIONS NOTED (MCN)
____AMEND AND RESUBMIT (A/R)

Any action shown above is subject to the terms of the contract and does not relieve the Contractor of any of its obligations under the contract, including design and detailing.

Contract No.: DB11002F

By: _____ Date: _____

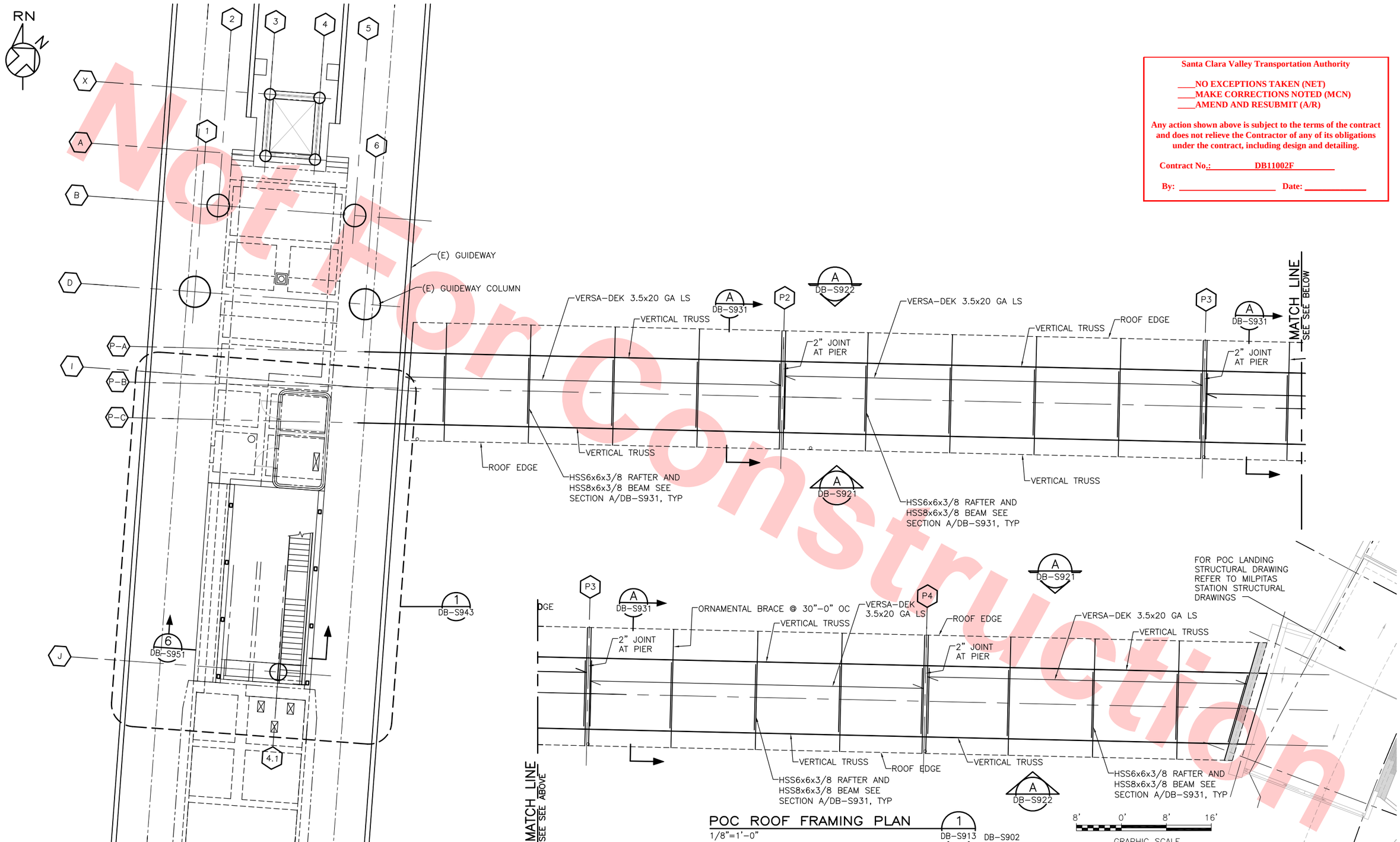

POC ROOF FRAMING PLAN
1/8"=1'-0"

Not For Construction

REV	DATE	BY	SUB	APP	DESCRIPTION
0	20130710				READINESS FOR CONSTRUCTION

DESIGNED BY J. DUNLEA
DRAWN BY J. DUNLEA
CHECKED BY S. DEBNATH
IN CHARGE R. BARLAAN
DATE 20130710

REGISTERED PROFESSIONAL ENGINEER JOHN M. DUNLEA No. S 2932 Exp. 6-30-14 STRUCTURAL STATE OF CALIFORNIA

Skanska Shimmick Herzog
1436 California Circle
Milpitas, California 95035
A Joint Venture

Anil Verma Associates, Inc.
1970 Broadway, Suite 525, Oakland, CA 94612
Phone: (510) 835-2537 Fax: (510) 835-2339

Lockwood, Andrews & Newnam, Inc. A CH2M HILL COMPANY

T·Y·LIN INTERNATIONAL

SUBMITTED

APPROVED

VTA BART SILICON VALLEY

BART SILICON VALLEY BERRYESSA EXTENSION

LINE, TRACK, STATIONS AND SYSTEMS DESIGN UNIT 023
MONTAGUE LRT AND MILPITAS POC

POC ROOF FRAMING PLAN

CADD FILENAME C700-S-DB-S913.dwg
SIZE D | SCALE 1/8"=1'-0"
CONTRACT NO. C700 | REV. 0
AREA CODE DB | SHEET NO. S913 | PAGE NO. 0306

lumor Jun 28, 2013 - 12:37pm C:\projectwise\copy of copy of mbx-template (5) (1)\dms60946\C700-S-DB-S913.dwg

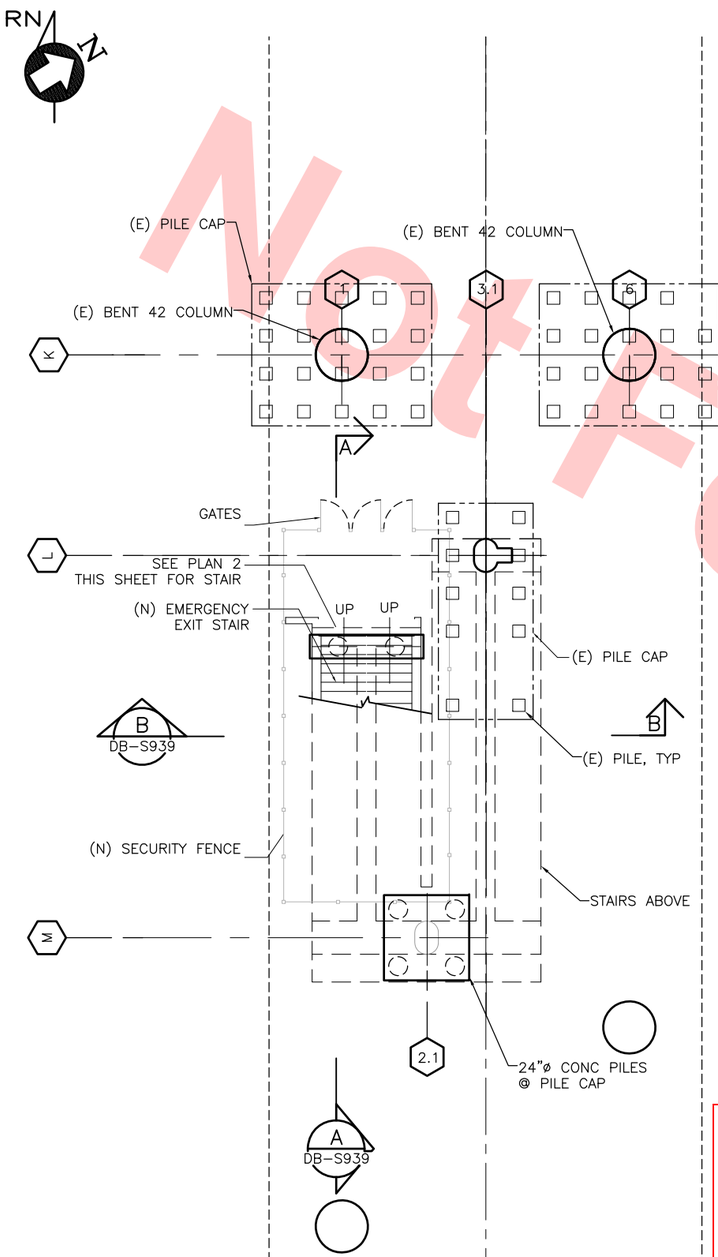

PLAN @ GROUND LEVEL 3
SCALE: 1/8"=1'-0"
DB-S915 DB-S900

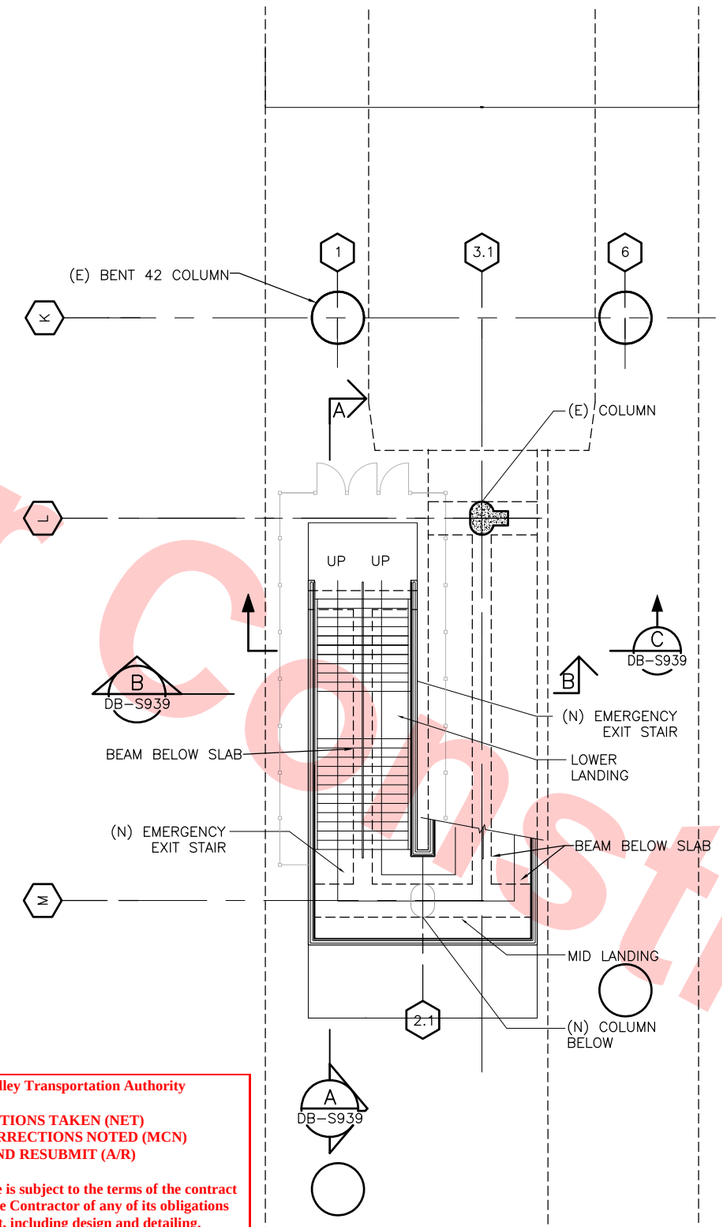

PLAN @ MID LANDING 2
SCALE: 1/8"=1'-0"
DB-S915 DB-S901

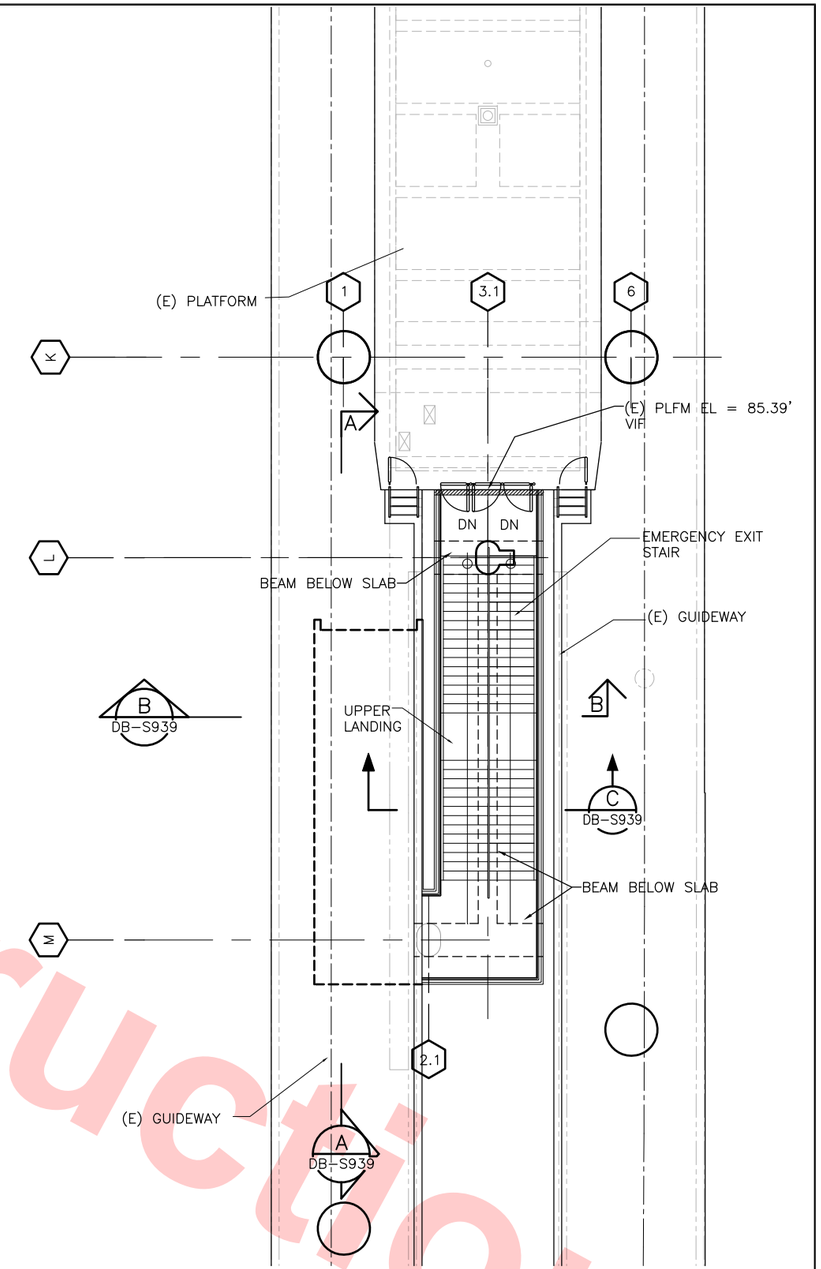

PLAN @ LRT PLATFORM LEVEL 1
SCALE: 1/8"=1'-0"
DB-S915 DB-S902

8' 0' 8' 16'
GRAPHIC SCALE

Santa Clara Valley Transportation Authority

____NO EXCEPTIONS TAKEN (NET)
____MAKE CORRECTIONS NOTED (MCN)
____AMEND AND RESUBMIT (A/R)

Any action shown above is subject to the terms of the contract and does not relieve the Contractor of any of its obligations under the contract, including design and detailing.

Contract No.: DB11002F

By: _____ Date: _____

Not For Construction

REV	DATE	BY	SUB	APP	DESCRIPTION
0	20130710				READINESS FOR CONSTRUCTION

DESIGNED BY J. DUNLEA
DRAWN BY J. DUNLEA
CHECKED BY S. DEBNATH
IN CHARGE R. BARLAAN
DATE 20130710

REGISTERED PROFESSIONAL ENGINEER JOHN M. DUNLEA No. S 2932 Exp. 6-30-14 STRUCTURAL STATE OF CALIFORNIA

Skanska Shimmick Herzog
1436 California Circle
Milpitas, California 95035
A Joint Venture

Anil Verma Associates, Inc.
1970 Broadway, Suite 525, Oakland, CA 94612
Phone: (510) 835-2537 Fax: (510) 835-2339
SUBMITTED

Lockwood, Andrews & Newnam, Inc. A LEO A DALY COMPANY
T·Y·LIN INTERNATIONAL
APPROVED

VTA BART SILICON VALLEY
BART SILICON VALLEY BERRYESSA EXTENSION

LINE, TRACK, STATIONS AND SYSTEMS
DESIGN UNIT 023
MONTAGUE LRT AND MILPITAS POC

LRT EMERGENCY EXIT STAIRS PLANS

CADD FILENAME C700-S-DB-S915.dwg
SIZE D | SCALE 1/8"=1'-0"
CONTRACT NO. C700 | REV. 0
AREA CODE DB | SHEET NO. S915 | PAGE NO. 0307

lumor Jun 28, 2013 - 12:39pm C:\projectwise\copy of copy of mbx-template (5) (1)\dms60946\C700-S-DB-S915.dwg

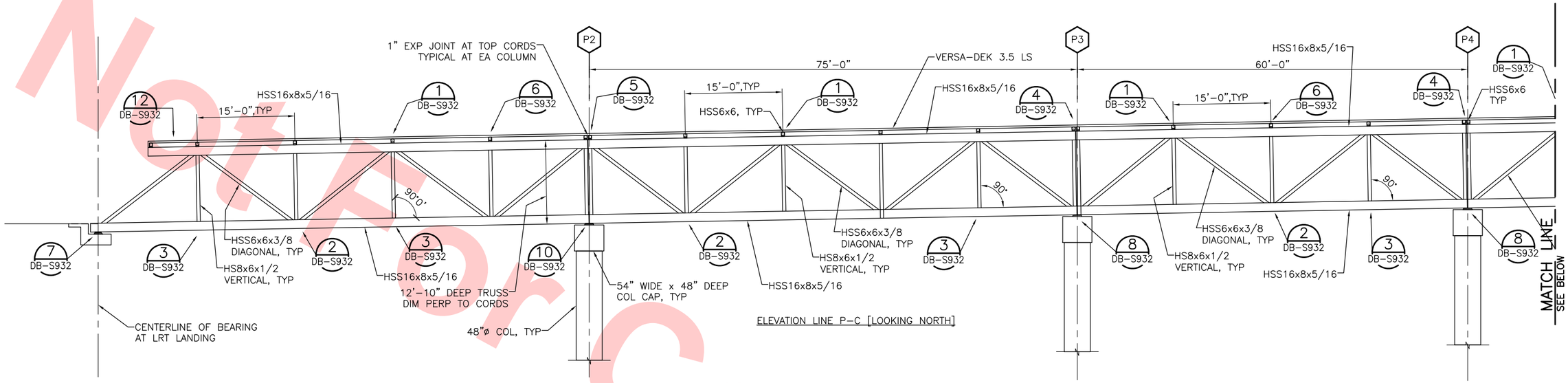

ELEVATION LINE P-C [LOOKING NORTH]

NOTES:

1. TRUSS CONNECTION DETAILS ON THIS SHEET ARE DRAWN OPPOSITE HAND ON DB-S932.

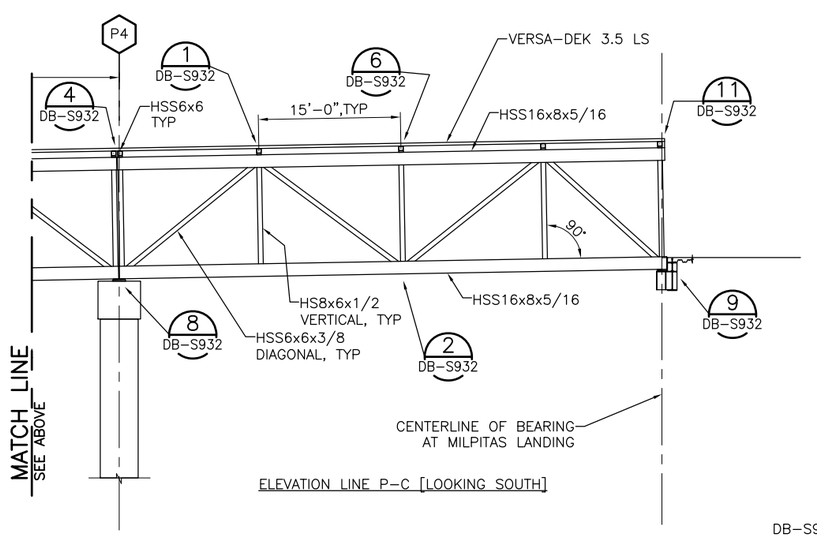

ELEVATION LINE P-C [LOOKING SOUTH]

ELEVATION TRUSSES LINE P-C LOOKING NORTH (A / DB-S921)

1/8"=1'-0"

DB-S900
DB-S901
DB-S902
DB-S912
DB-S913

Santa Clara Valley Transportation Authority

____NO EXCEPTIONS TAKEN (NET)
____MAKE CORRECTIONS NOTED (MCN)
____AMEND AND RESUBMIT (A/R)

Any action shown above is subject to the terms of the contract and does not relieve the Contractor of any of its obligations under the contract, including design and detailing.

Contract No.: DB11002F

By: _____ Date: _____

8' 0' 8' 16'
GRAPHIC SCALE

Not For Construction

REV	DATE	BY	SUB	APP	DESCRIPTION
0	20130710				READINESS FOR CONSTRUCTION

DESIGNED BY J. DUNLEA
DRAWN BY J. DUNLEA
CHECKED BY S. DEBNATH
IN CHARGE R. BARLAAN
DATE 20130710

REGISTERED PROFESSIONAL ENGINEER JOHN M. DUNLEA No. S 2932 Exp. 6-30-14 STRUCTURAL STATE OF CALIFORNIA

Skanska Shimmick Herzog
1436 California Circle
Milpitas, California 95035
A Joint Venture

Anil Verma Associates, Inc.
1970 Broadway, Suite 525 Oakland, CA 94612
Phone: (510) 835-2537 Fax: (510) 835-2339
SUBMITTED

Lockwood, Andrews & Newnam, Inc. A LEO A DALY COMPANY
T·Y·LIN INTERNATIONAL
APPROVED

VTA BART SILICON VALLEY
BART SILICON VALLEY BERRYESSA EXTENSION

LINE, TRACK, STATIONS AND SYSTEMS
DESIGN UNIT 023
MONTAGUE LRT AND MILPITAS POC

ELEVATION TRUSSES LINE P-C

CADD FILENAME C700-S-DB-S921.dwg
SIZE D | SCALE 1/8"=1'-0"
CONTRACT NO. C700 | REV. 0
AREA CODE DB | SHEET NO. S921 | PAGE NO. 0308

lumar Jun 28, 2013 - 12:41pm C:\projects\ekel\copy of copy of mbx-template (5) (1)\dms60946\C700-S-DB-S921.dwg

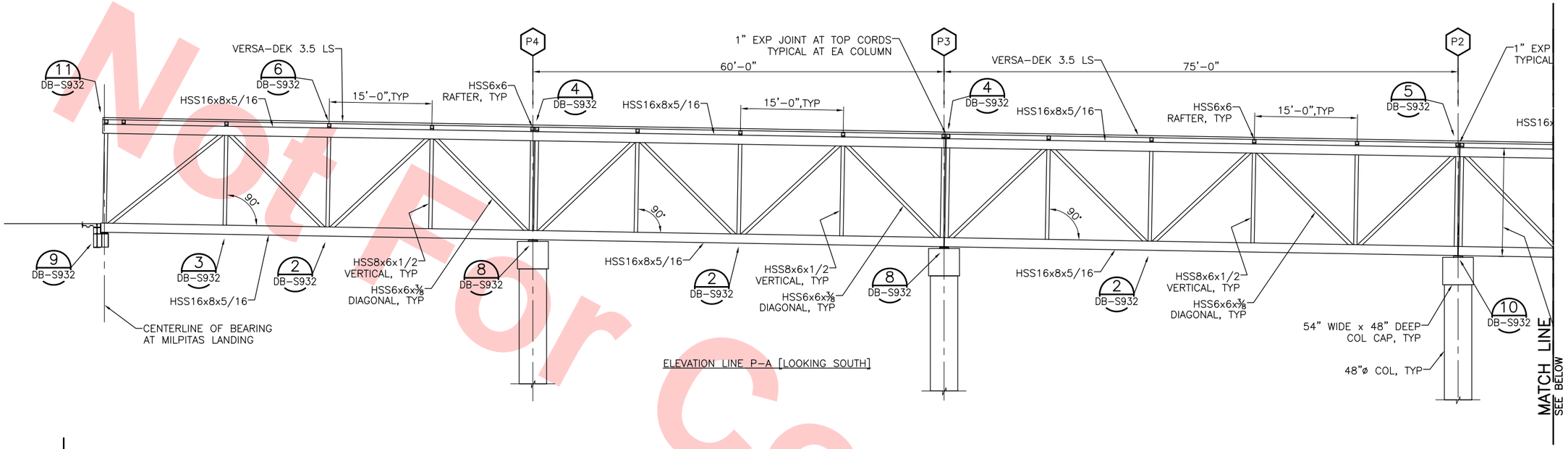

ELEVATION LINE P-A [LOOKING SOUTH]

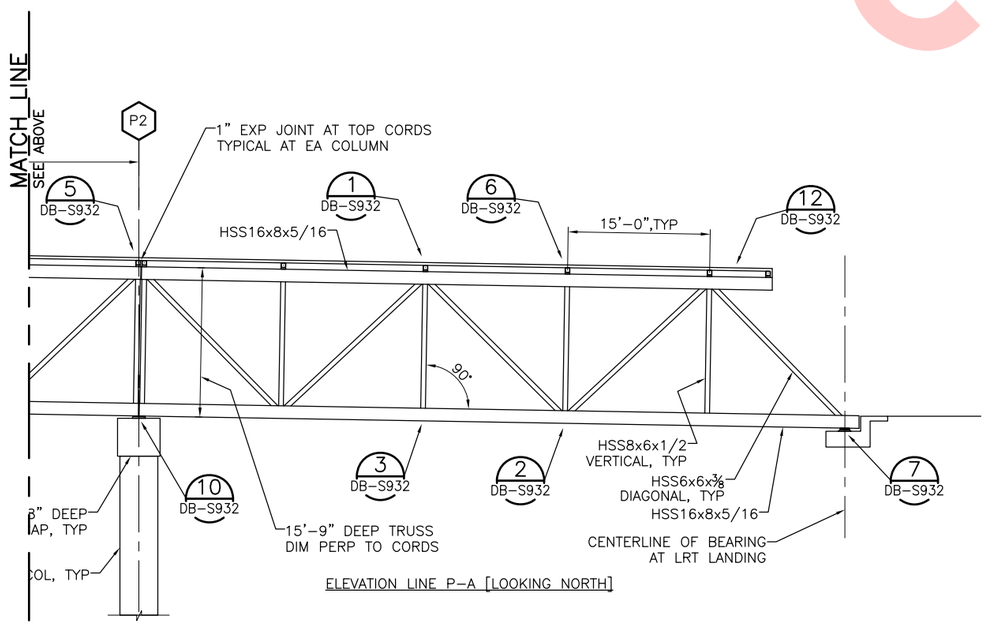

ELEVATION LINE P-A [LOOKING NORTH]

ELEVATION TRUSSES LINE P-A LOOKING SOUTH

1/8"=1'-0"

A DB-S922

DB-S900
DB-S901
DB-S902
DB-S912
DB-S913

Santa Clara Valley Transportation Authority

____NO EXCEPTIONS TAKEN (NET)
____MAKE CORRECTIONS NOTED (MCN)
____AMEND AND RESUBMIT (A/R)

Any action shown above is subject to the terms of the contract and does not relieve the Contractor of any of its obligations under the contract, including design and detailing.

Contract No.: DB11002F

By: _____ Date: _____

8' 0' 8' 16'
GRAPHIC SCALE

REV	DATE	BY	SUB	APP	DESCRIPTION
0	20130710				READINESS FOR CONSTRUCTION

DESIGNED BY J. DUNLEA
DRAWN BY J. DUNLEA
CHECKED BY S. DEBNATH
IN CHARGE R. BARLAAN
DATE 20130710

REGISTERED PROFESSIONAL ENGINEER JOHN M. DUNLEA No. S 2932 Exp. 6-30-14 STRUCTURAL STATE OF CALIFORNIA

Skanska Shimmick Herzog
1436 California Circle
Milpitas, California 95035
A Joint Venture

Anil Verma Associates, Inc.
1970 Broadway, Suite 525 Oakland, CA 94612
Phone: (510) 835-2537 Fax: (510) 835-2339
SUBMITTED

Lockwood, Andrews & Newnam, Inc. A LEO A DALY COMPANY
T·Y·LIN INTERNATIONAL
APPROVED

VTA BART SILICON VALLEY
BART SILICON VALLEY BERRYESSA EXTENSION

LINE, TRACK, STATIONS AND SYSTEMS DESIGN UNIT 023
MONTAGUE LRT AND MILPITAS POC

ELEVATION TRUSSES LINE P-A

CADD FILENAME C700-S-DB-S922.dwg
SIZE D | SCALE 1/8"=1'-0"
CONTRACT NO. C700 | REV. 0
AREA CODE DB | SHEET NO. S922 | PAGE NO. 0309

Not For Construction

lumar Jun 28, 2013 - 12:42pm C:\projectwise\copy of copy of mbx-template (5) (1)\dms60946\C700-S-DB-S922.dwg

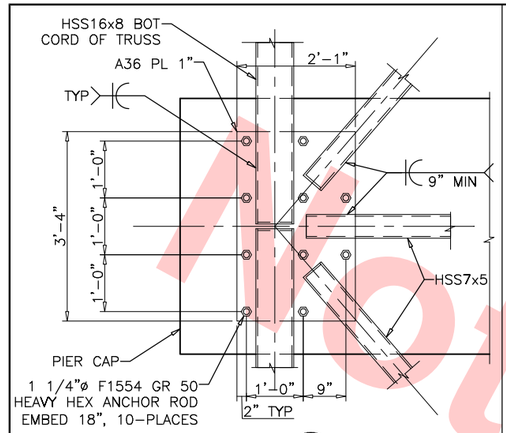

PLAN DETAIL 1 (DB-S931)
SCALE: 3/4"=1'-0"

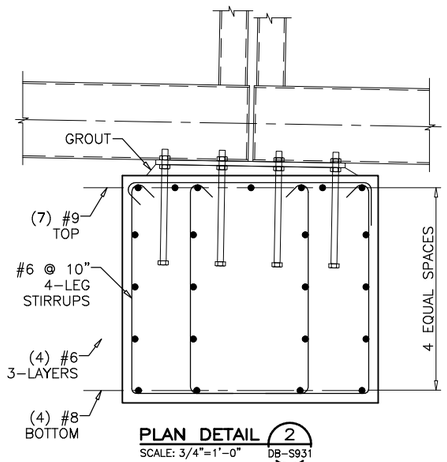

PLAN DETAIL 2 (DB-S931)
SCALE: 3/4"=1'-0"

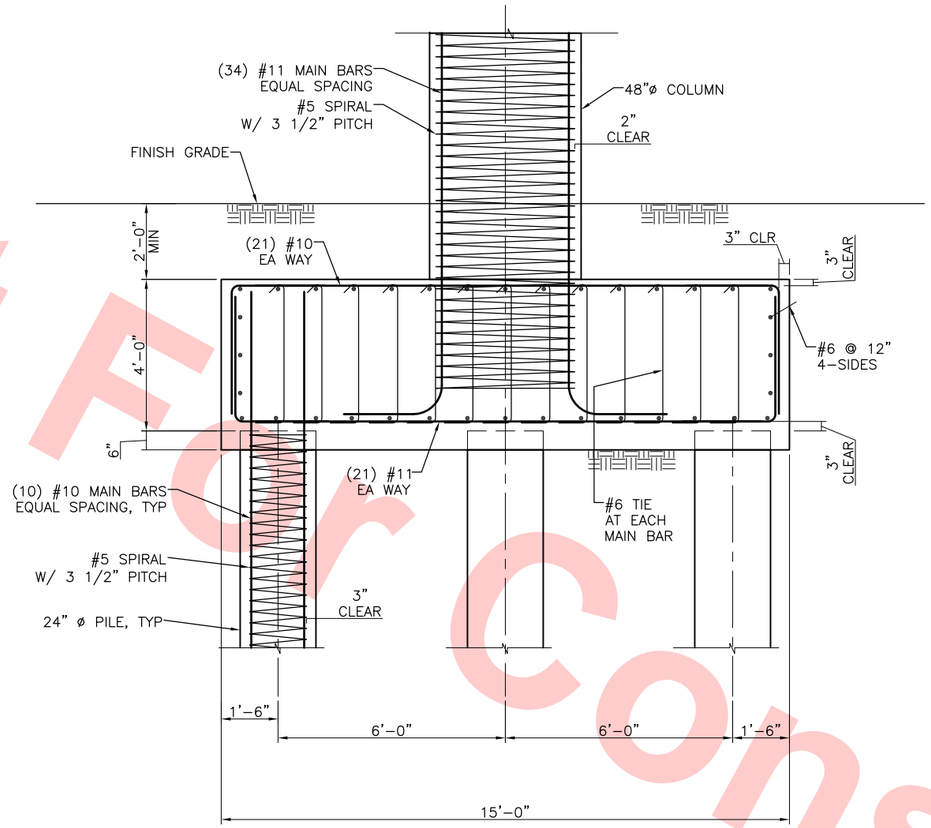

POC FOOTING SECTION B (DB-S931)
SCALE: 1/2"=1'-0"

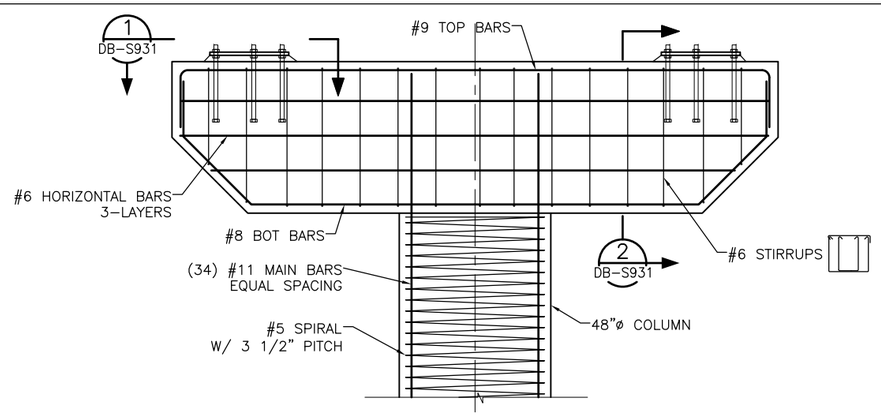

COLUMN CAP DETAIL C (DB-S931)
SCALE: 1/2"=1'-0"

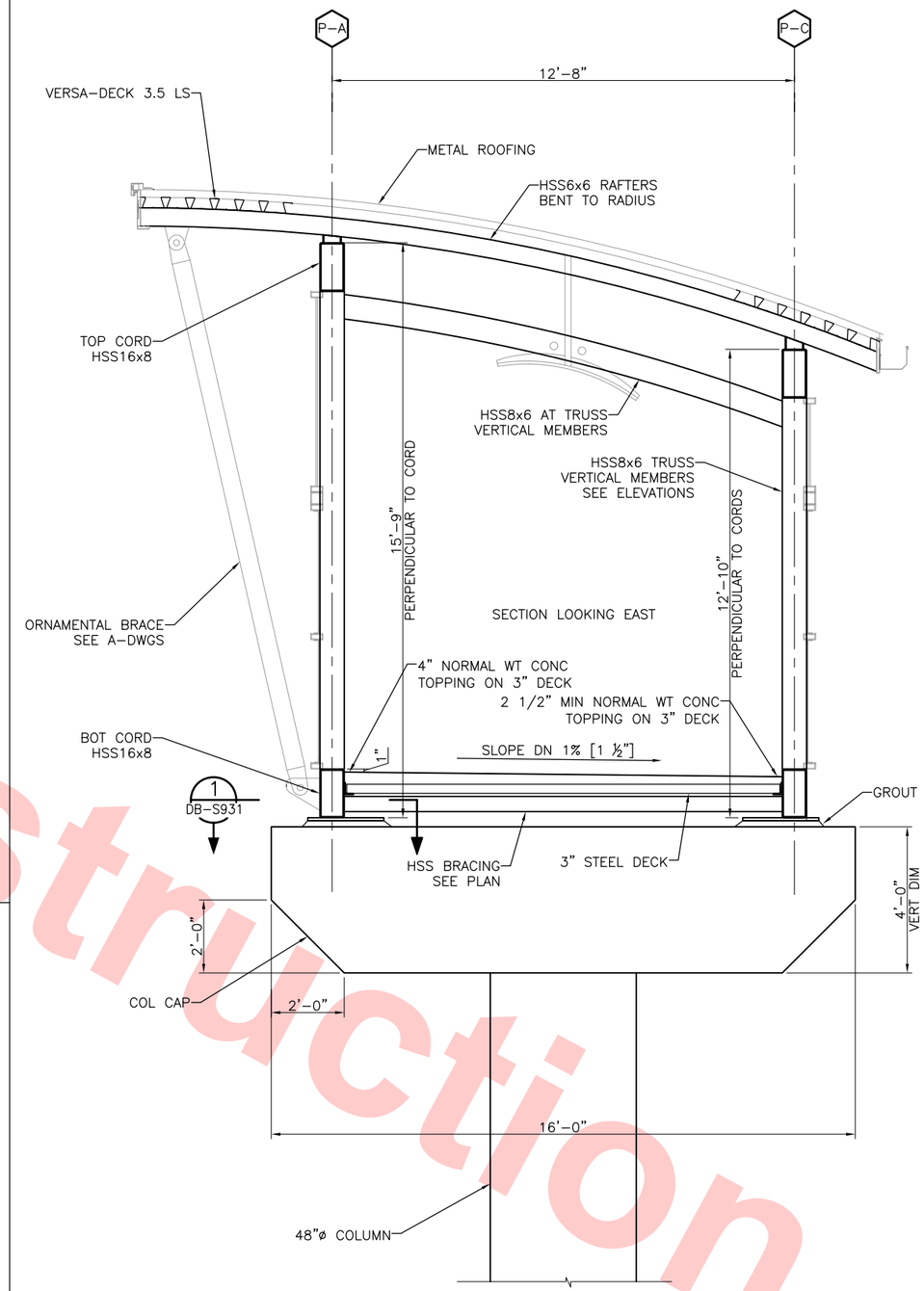

POC SECTION A (DB-S931) DB-S912 DB-S913
SCALE: 1/2"=1'-0"

Santa Clara Valley Transportation Authority

____NO EXCEPTIONS TAKEN (NET)
____MAKE CORRECTIONS NOTED (MCN)
____AMEND AND RESUBMIT (A/R)

Any action shown above is subject to the terms of the contract and does not relieve the Contractor of any of its obligations under the contract, including design and detailing.

Contract No.: DB11002F

By: _____ Date: _____

Not For Construction

REV	DATE	BY	SUB	APP	DESCRIPTION
0	20130710				READINESS FOR CONSTRUCTION

DESIGNED BY J. DUNLEA
DRAWN BY J. DUNLEA
CHECKED BY S. DEBNATH
IN CHARGE R. BARLAAN
DATE 20130710

REGISTERED PROFESSIONAL ENGINEER ANIL K. DINH No. S 2932 Exp. 6-30-14 STRUCTURAL STATE OF CALIFORNIA

Skanska Shimmick Herzog
1436 California Circle Milpitas, California 95035
A Joint Venture

Anil Verma Associates, Inc.
1970 Broadway, Suite 525 Oakland, CA 94612
Phone: (510) 835-2537 Fax: (510) 535-2339
SUBMITTED

Lockwood, Andrews & Newnam, Inc. A CH2M HILL COMPANY
T·Y·LIN INTERNATIONAL
APPROVED

VTA BART SILICON VALLEY
BART SILICON VALLEY BERRYESSA EXTENSION

LINE, TRACK, STATIONS AND SYSTEMS
DESIGN UNIT 023
MONTAGUE LRT AND MILPITAS POC

SECTIONS
SHEET 1 OF 2

CADD FILENAME C700-S-DB-S931.dwg
SIZE D | SCALE 1/8"=1'-0"
CONTRACT NO. C700 | REV. 0
AREA CODE DB | SHEET NO. S931 | PAGE NO. 0310

lumor Jun 28, 2013 - 12:44pm C:\projectwise\copy of copy of mbx-template (5) (1)\dms60946\C700-S-DB-S931.dwg

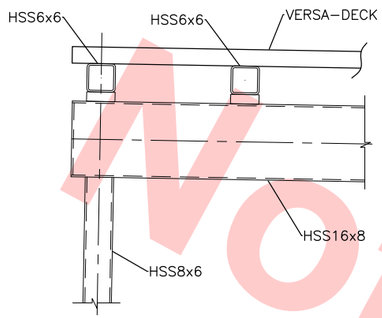

DETAIL 11 DB-S932 — DB-S921 DB-S922
SCALE: 3/4"=1'-0"

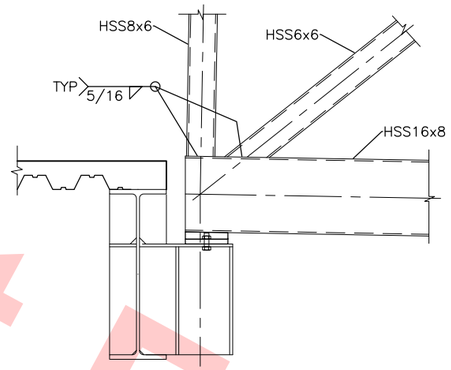

DETAIL 9 DB-S932 — DB-S921 DB-S922
SCALE: 3/4"=1'-0"

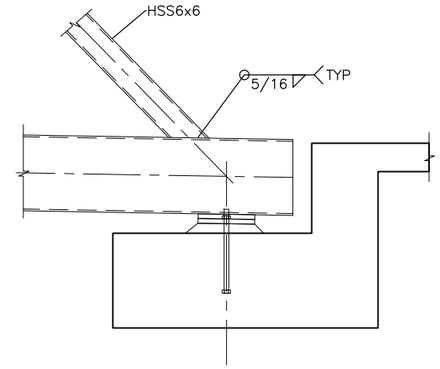

DETAIL 7 DB-S932 — DB-S921 DB-S922
SCALE: 3/4"=1'-0"

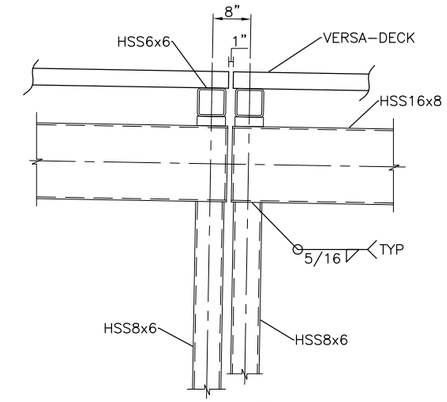

DETAIL 4 DB-S932 — DB-S921 DB-S922
SCALE: 3/4"=1'-0"

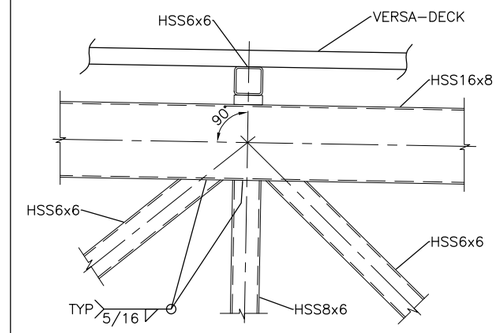

DETAIL 1 DB-S932 — DB-S921 DB-S922
SCALE: 3/4"=1'-0"

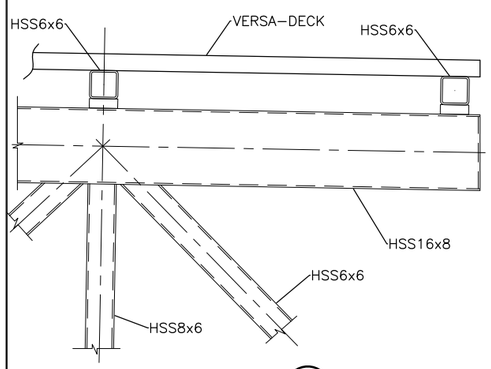

DETAIL 12 DB-S932 — DB-S921 DB-S922
SCALE: 3/4"=1'-0"

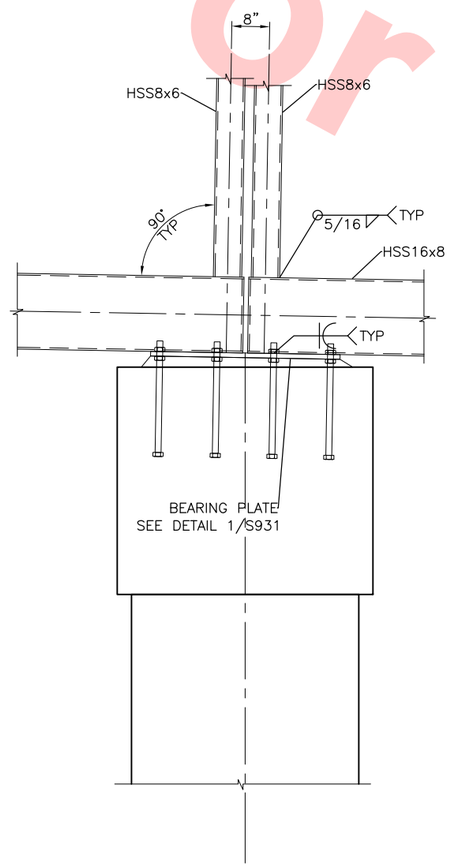

DETAIL 10 DB-S932 — DB-S921 DB-S922
SCALE: 3/4"=1'-0"

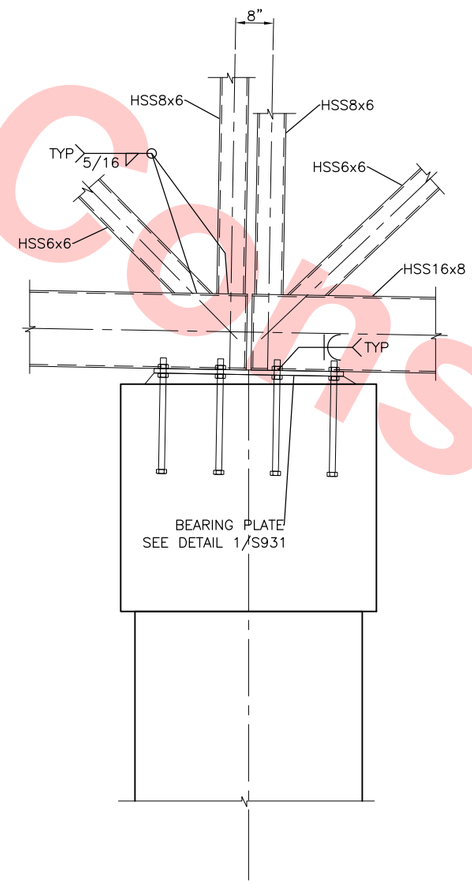

DETAIL 8 DB-S932 — DB-S921 DB-S922
SCALE: 3/4"=1'-0"

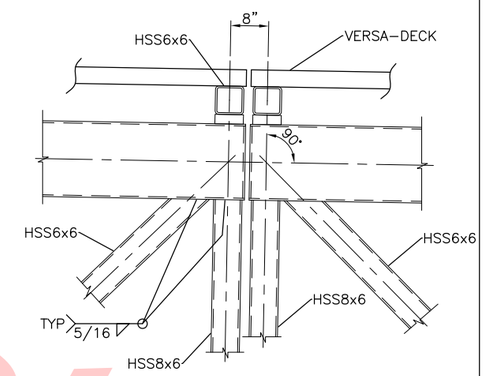

DETAIL 5 DB-S932 — DB-S921 DB-S922
SCALE: 3/4"=1'-0"

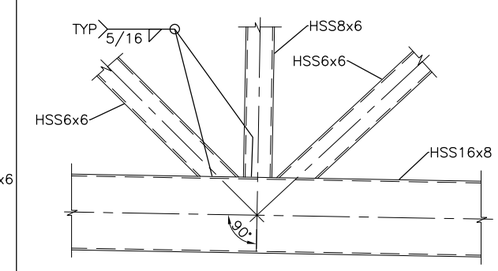

DETAIL 2 DB-S932 — DB-S921 DB-S922
SCALE: 3/4"=1'-0"

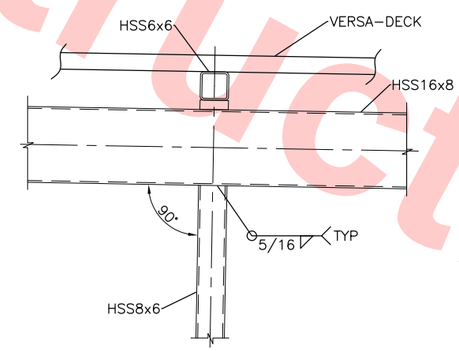

DETAIL 6 DB-S932 — DB-S921 DB-S922
SCALE: 3/4"=1'-0"

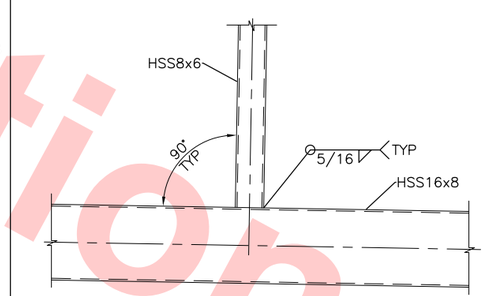

DETAIL 3 DB-S932 — DB-S921 DB-S922
SCALE: 3/4"=1'-0"

Santa Clara Valley Transportation Authority

____NO EXCEPTIONS TAKEN (NET)
____MAKE CORRECTIONS NOTED (MCN)
____AMEND AND RESUBMIT (A/R)

Any action shown above is subject to the terms of the contract and does not relieve the Contractor of any of its obligations under the contract, including design and detailing.

Contract No.: DB11002F

By: _____ **Date:** _____

REV	DATE	BY	SUB	APP	DESCRIPTION
0	20130710				READINESS FOR CONSTRUCTION

DESIGNED BY J. DUNLEA
DRAWN BY J. DUNLEA
CHECKED BY S. DEBNATH
IN CHARGE R. BARLAAN
DATE 20130710

REGISTERED PROFESSIONAL ENGINEER JOHN M. DUNLEA No. S 2932 Exp. 6-30-14 STRUCTURAL STATE OF CALIFORNIA

Skanska Shimmick Herzog
1436 California Circle
Milpitas, California 95035
A Joint Venture

Anil Verma Associates, Inc.
1970 Broadway, Suite 555, Oakland, CA 94612
Phone: (510) 835-2537 Fax: (510) 835-2339

SUBMITTED

Lockwood, Andrews & Newnam, Inc. A LEO A DALY COMPANY
T·Y·LIN INTERNATIONAL

APPROVED

VTA BART SILICON VALLEY
BART SILICON VALLEY BERRYESSA EXTENSION

LINE, TRACK, STATIONS AND SYSTEMS
DESIGN UNIT 023
MONTAGUE LRT AND MILPITAS POC

SECTIONS, SHEET 2 OF 2

CADD FILENAME C700-S-DB-S932.dwg
SIZE D | SCALE 3/4"=1'-0"
CONTRACT NO. C700 | REV. 0
AREA CODE DB | SHEET NO. S932 | PAGE NO. 0311

Not For Construction

lumar Jun 25, 2013 – 12:45pm C:\projectwise\copy of copy of mbx-template (5) (1)\dms60946\C700-S-DB-S932.dwg

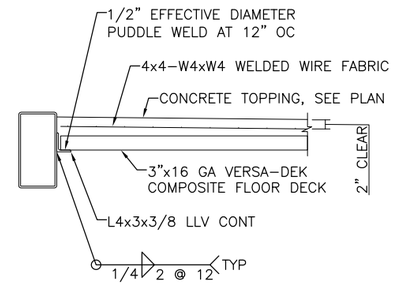

SECTION 4 DB-S933 DB-S912
SCALE: 3/4"=1'-0"

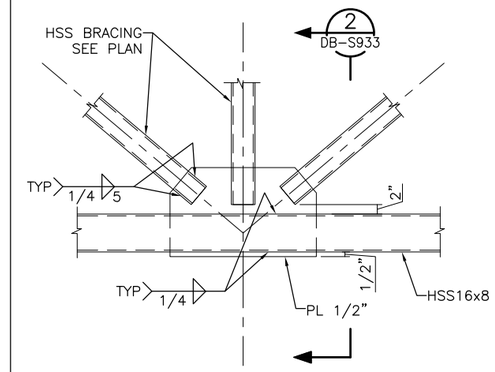

PLAN DETAIL 1 DB-S933 DB-S912
SCALE: 3/4"=1'-0"

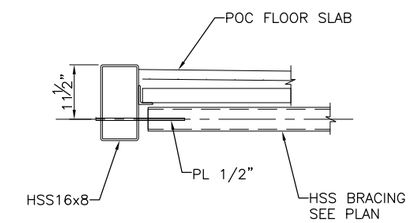

SECTION 2 DB-S933
SCALE: 3/4"=1'-0"

Santa Clara Valley Transportation Authority

____NO EXCEPTIONS TAKEN (NET)
____MAKE CORRECTIONS NOTED (MCN)
____AMEND AND RESUBMIT (A/R)

Any action shown above is subject to the terms of the contract and does not relieve the Contractor of any of its obligations under the contract, including design and detailing.

Contract No.: DB11002F

By: _____ Date: _____

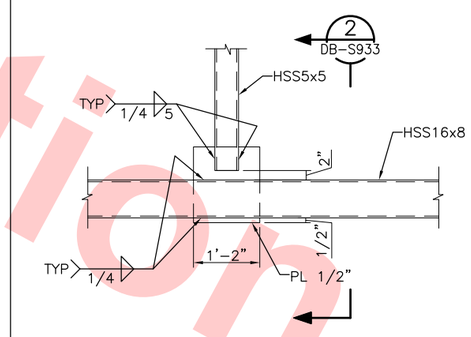

PLAN DETAIL 3 DB-S933 DB-S912
SCALE: 3/4"=1'-0"

Not For Construction

REV	DATE	BY	SUB	APP	DESCRIPTION
0	20130710				READINESS FOR CONSTRUCTION

DESIGNED BY J. DUNLEA
DRAWN BY J. DUNLEA
CHECKED BY S. DEBNATH
IN CHARGE R. BARLAAN
DATE 20130710

REGISTERED PROFESSIONAL ENGINEER JOHN M. DUNLEA No. S 2932 Exp. 6-30-14 STRUCTURAL STATE OF CALIFORNIA

Skanska Shimmick Herzog
1436 California Circle
Milpitas, California 95035
A Joint Venture

Anil Verma Associates, Inc.
1970 Broadway, Suite 325 Oakland, CA 94612
Phone: (510) 835-2537 Fax: (510) 835-2339

Lockwood, Andrews & Newnam, Inc. A LEO A DALY COMPANY
T·Y·LIN INTERNATIONAL

SUBMITTED _____
APPROVED _____

VTA BART SILICON VALLEY
BART SILICON VALLEY BERRYESSA EXTENSION

LINE, TRACK, STATIONS AND SYSTEMS
DESIGN UNIT 023
MONTAGUE LRT AND MILPITAS POC

POC DETAILS

CADD FILENAME C700-S-DB-S932.dwg
SIZE D | SCALE 3/4"=1'-0"
CONTRACT NO. C700 | REV. 0
AREA CODE DB | SHEET NO. S933 | PAGE NO. 0312

lumar Jun 28, 2013 - 12:46pm C:\projectwise\copy of copy of mbx-template (5) (1)\dms60946\C700-S-DB-S933.dwg

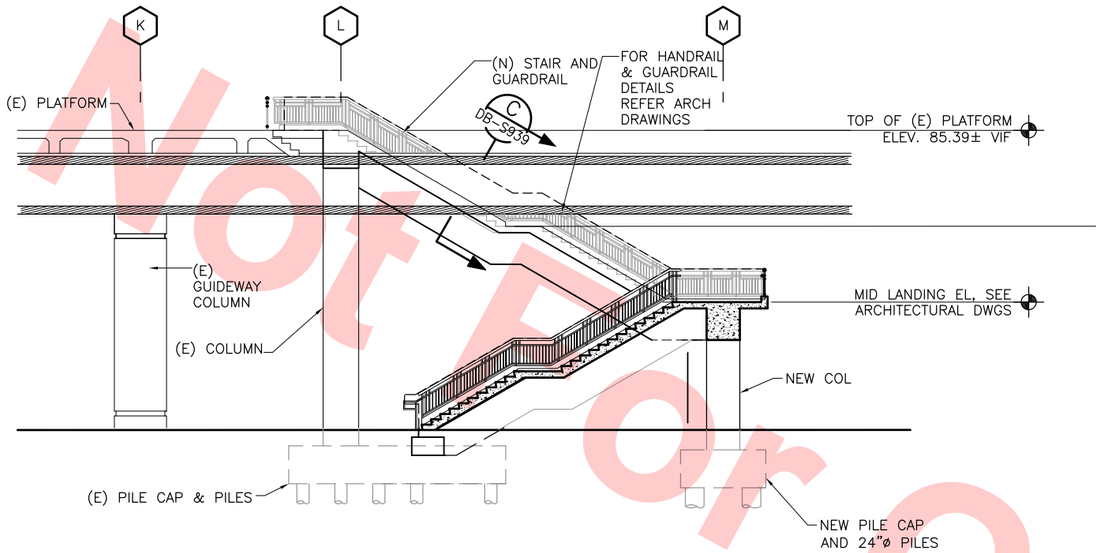

LRT EMERGENCY EXIT STAIR SECTION (A)

SCALE: 1/8"=1'-0"

DB-S939 / DB-S915

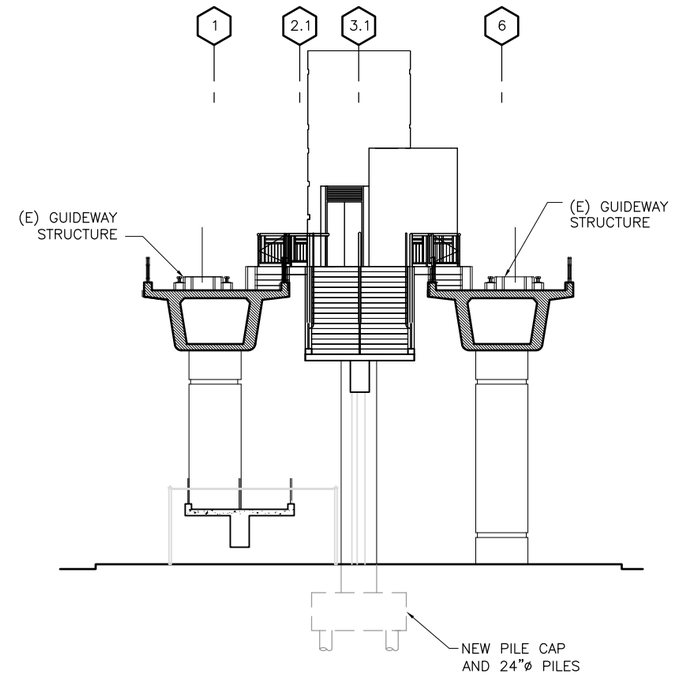

LRT EMERGENCY EXIT STAIR SECTION (B)

SCALE: 1/8"=1'-0"

DB-S939 / DB-S915

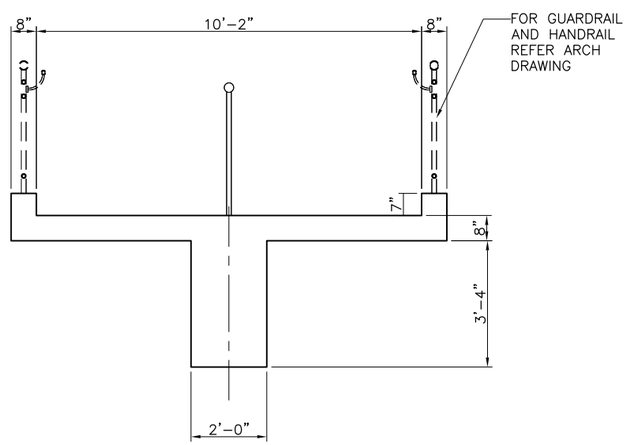

LRT EMERGENCY EXIT STAIR SECTION (C)

SCALE: 1/2"=1'-0"

DB-S939 / DB-S915

Santa Clara Valley Transportation Authority

____NO EXCEPTIONS TAKEN (NET)
____MAKE CORRECTIONS NOTED (MCN)
____AMEND AND RESUBMIT (A/R)

Any action shown above is subject to the terms of the contract and does not relieve the Contractor of any of its obligations under the contract, including design and detailing.

Contract No.: DB11002F

By: _____ **Date:** _____

8' 0' 8' 16'

GRAPHIC SCALE

Not For Construction

REV	DATE	BY	SUB	APP	DESCRIPTION
0	20130710				READINESS FOR CONSTRUCTION

DESIGNED BY J. DUNLEA
DRAWN BY J. DUNLEA
CHECKED BY S. DEBNATH
IN CHARGE R. BARLAAN
DATE 20130710

REGISTERED PROFESSIONAL ENGINEER JOHN W. DUNLEA No. S 2932 Exp. 6-30-14 STRUCTURAL STATE OF CALIFORNIA

Skanska Shimmick Herzog
1436 California Circle
Milpitas, California 95035
A Joint Venture

Anil Verma Associates, Inc.
1970 Broadway, Suite 525 Oakland, CA 94612
Phone: (510) 835-2537 Fax: (510) 835-2339

Lockwood, Andrews & Newnam, Inc. A LEO A DALY COMPANY
T·Y·LIN INTERNATIONAL

SUBMITTED _____ APPROVED _____

BART SILICON VALLEY BERRYESSA EXTENSION

LINE, TRACK, STATIONS AND SYSTEMS DESIGN UNIT 023
MONTAGUE LRT AND MILPITAS POC

LRT EMERGENCY EXIT STAIR SECTIONS

CADD FILENAME C700-S-DB-S939.dwg
SIZE D | SCALE 1/8"=1'-0"
CONTRACT NO. C700 | REV. 0
AREA CODE DB | SHEET NO. S939 | PAGE NO. 0313

lumar Jun 28, 2013 - 12:47pm C:\projectwise\copy of copy of mbx-template (5) (1)\dms60946\C700-S-DB-S939.dwg

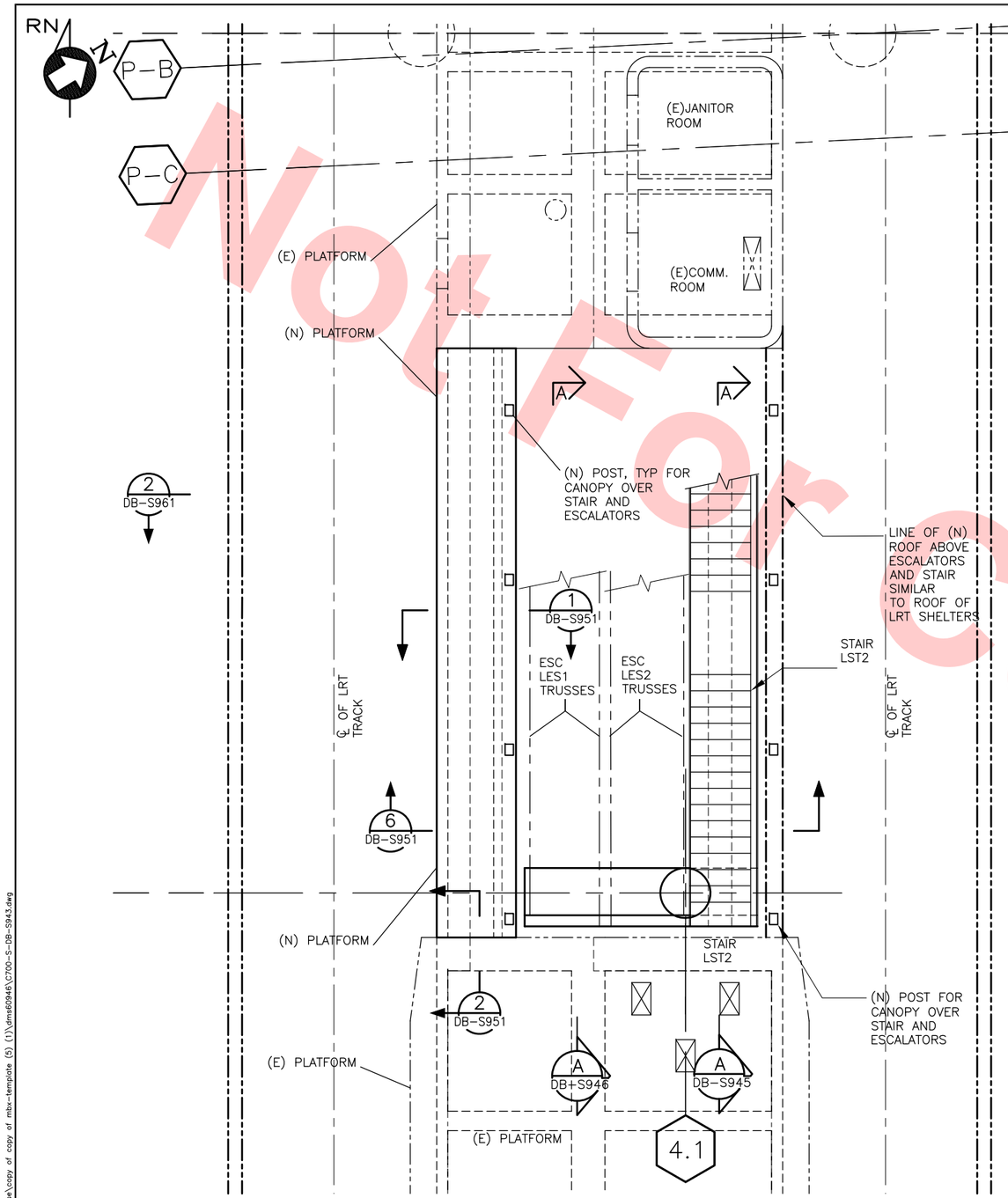

DETAIL LRT PLATFORM LEVEL PLAN (1 / DB-S943)

SCALE: 1/4"=1'-0"

DB-S913

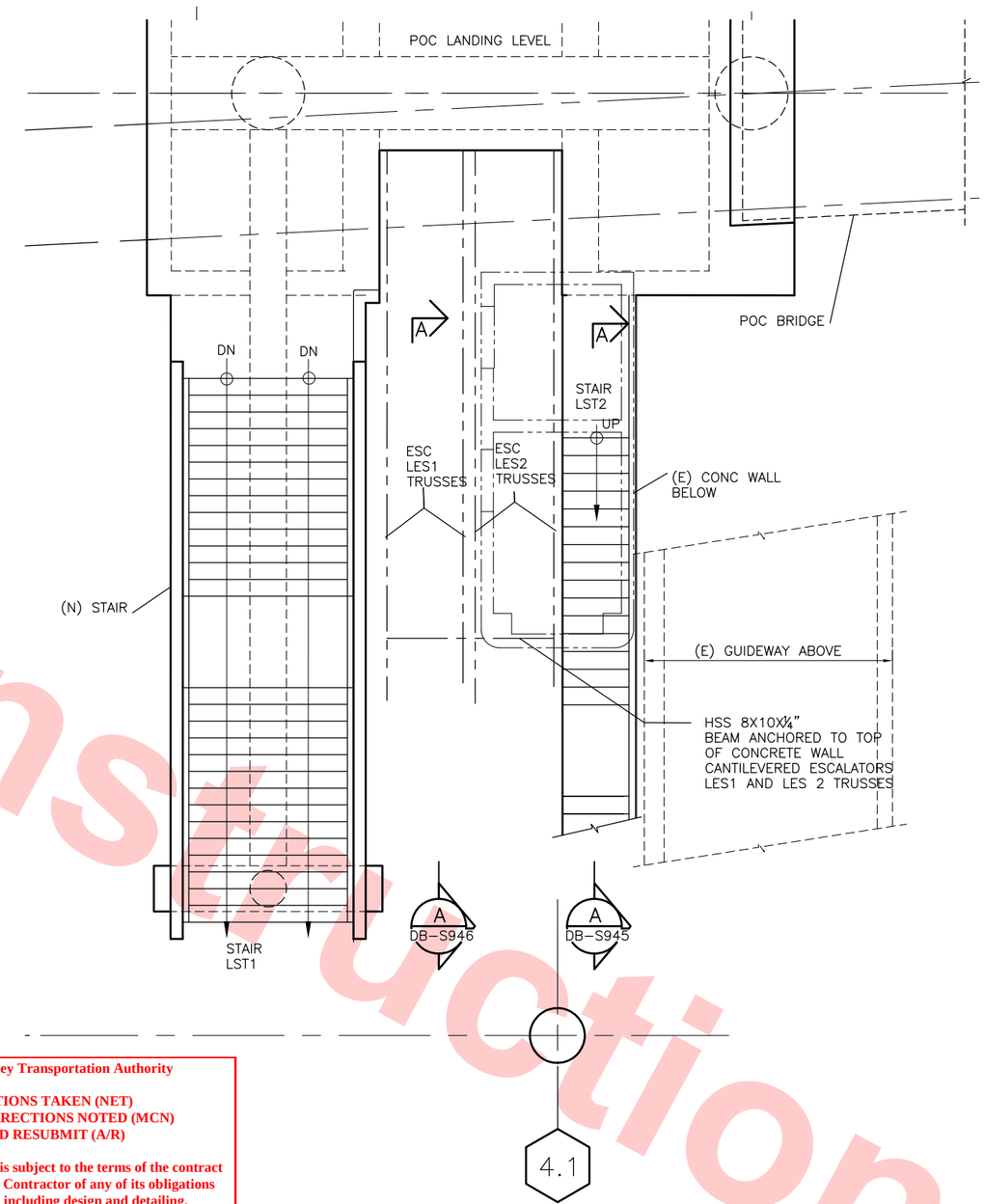

DETAIL LRT BRIDGE LEVEL PLAN (2 / DB-S943)

SCALE: 1/4"=1'-0"

DB-S912

4' 0' 4' 8'

GRAPHIC SCALE

Santa Clara Valley Transportation Authority

____NO EXCEPTIONS TAKEN (NET)
____MAKE CORRECTIONS NOTED (MCN)
____AMEND AND RESUBMIT (A/R)

Any action shown above is subject to the terms of the contract and does not relieve the Contractor of any of its obligations under the contract, including design and detailing.

Contract No.: DB11002F

By: _____ **Date:** _____

Not For Construction

REV	DATE	BY	SUB	APP	DESCRIPTION
0	20130710				READINESS FOR CONSTRUCTION

DESIGNED BY J. DUNLEA
DRAWN BY J. DUNLEA
CHECKED BY S. DEBNATH
IN CHARGE R. BARLAAN
DATE 20130710

REGISTERED PROFESSIONAL ENGINEER JOHN DUNLEA No. S 2932 Exp. 6-30-14 STRUCTURAL STATE OF CALIFORNIA

Skanska Shimmick Herzog
1436 California Circle
Milpitas, California 95035
A Joint Venture

Anil Verma Associates, Inc.
1970 Broadway, Suite 525, Oakland, CA 94612
Phone: (510) 835-2537 Fax: (510) 835-2339

SUBMITTED

Lockwood, Andrews & Newnam, Inc. A LAN & BALY COMPANY
T·Y·LIN INTERNATIONAL

APPROVED

VTA BART SILICON VALLEY

BART SILICON VALLEY BERRYESSA EXTENSION

LINE, TRACK, STATIONS AND SYSTEMS
DESIGN UNIT 023
MONTAGUE LRT AND MILPITAS POC

LRT STAIR AND ESCALATORS
PLATFORM & BRIDGE LEVEL DETAIL PLANS

CADD FILENAME C700-S-DB-S943.dwg
SIZE D | SCALE 1/4"=1'-0"
CONTRACT NO. C700 | REV. 0
AREA CODE DB | SHEET NO. S943 | PAGE NO. 0314

lumor Jun 28, 2013 - 1:03pm C:\projectwise\copy of copy of mbx-template (5) (1)\dms60946\C700-S-DB-S943.dwg

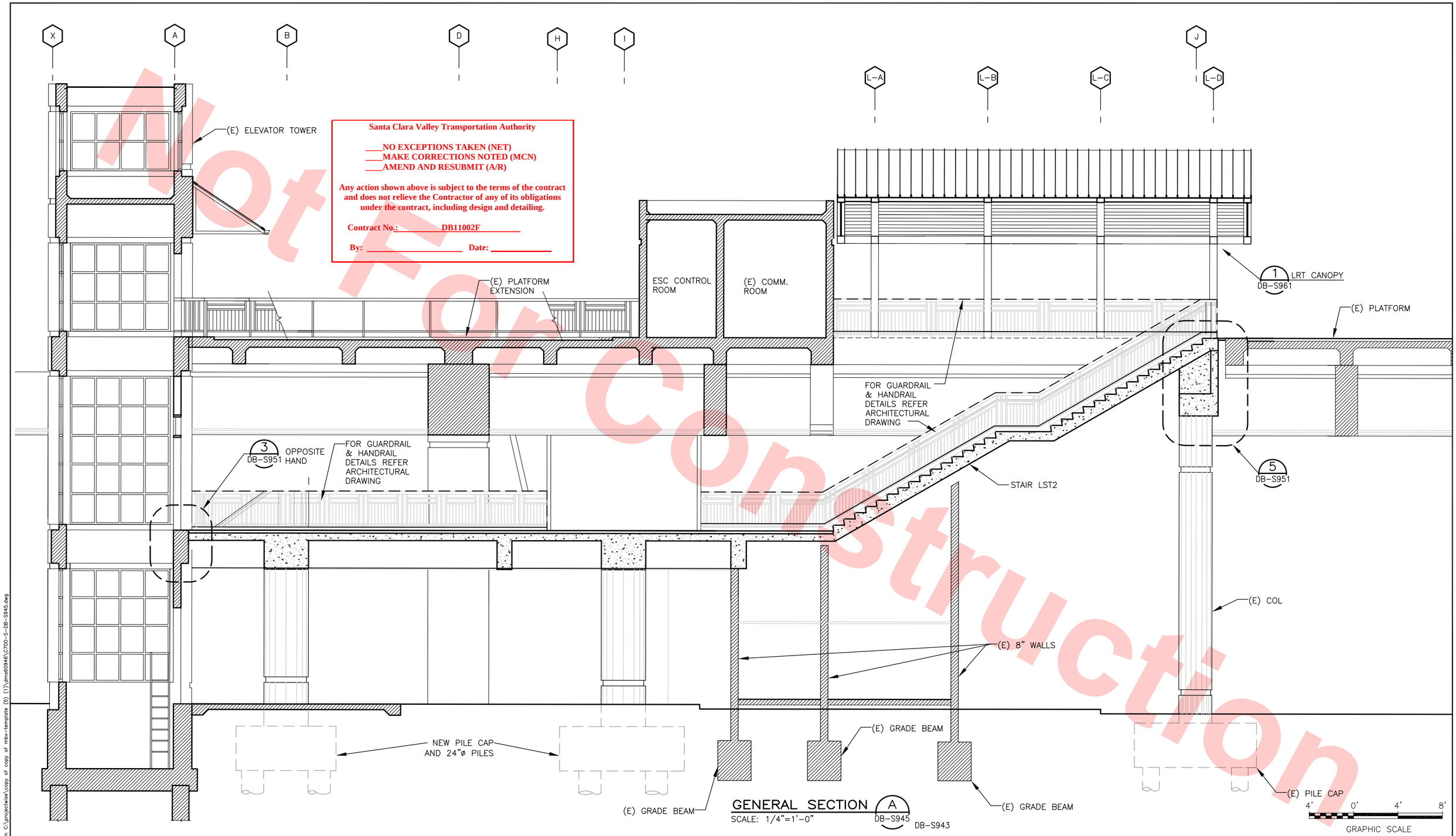

GENERAL SECTION A DB-S945 DB-S943
SCALE: 1/4"=1'-0"

Santa Clara Valley Transportation Authority

____NO EXCEPTIONS TAKEN (NET)
____MAKE CORRECTIONS NOTED (MCN)
____AMEND AND RESUBMIT (A/R)

Any action shown above is subject to the terms of the contract and does not relieve the Contractor of any of its obligations under the contract, including design and detailing.

Contract No.: DB11002F

By: _____ Date: _____

Not For Construction

REV	DATE	BY	SUB	APP	DESCRIPTION
0	20130710				READINESS FOR CONSTRUCTION

DESIGNED BY J. DUNLEA
DRAWN BY J. DUNLEA
CHECKED BY S. DEBNATH
IN CHARGE R. BARLAAN
DATE 20130710

REGISTERED PROFESSIONAL ENGINEER JOHN H. DUNLEA No. S 2932 Exp. 6-30-14 STRUCTURAL STATE OF CALIFORNIA

Skanska Shimmick Herzog
1436 California Circle
Milpitas, California 95035
A Joint Venture

Anil Verma Associates, Inc.
1970 Broadway, Suite 325 Oakland, CA 94612
Phone: (510) 835-2537 Fax: (510) 835-2339

Lockwood, Andrews & Newnam, Inc. A LEO A DALY COMPANY
T·Y·LIN INTERNATIONAL

SUBMITTED _____ APPROVED _____

VTA BART SILICON VALLEY
BART SILICON VALLEY BERRYESSA EXTENSION

LINE, TRACK, STATIONS AND SYSTEMS
DESIGN UNIT 023
MONTAGUE LRT AND MILPITAS POC

LRT STAIR LST 2
DETAIL SECTION

CADD FILENAME C700-S-DB-S945.dwg
SIZE D | SCALE 1/4"=1'-0"
CONTRACT NO. C700 | REV. 0
AREA CODE DB | SHEET NO. S945 | PAGE NO. 0315

lumar Jun 28, 2013 - 1:02pm C:\projectwise\copy of copy of mbx-template (5) (1)\dms60946\C700-S-DB-S945.dwg

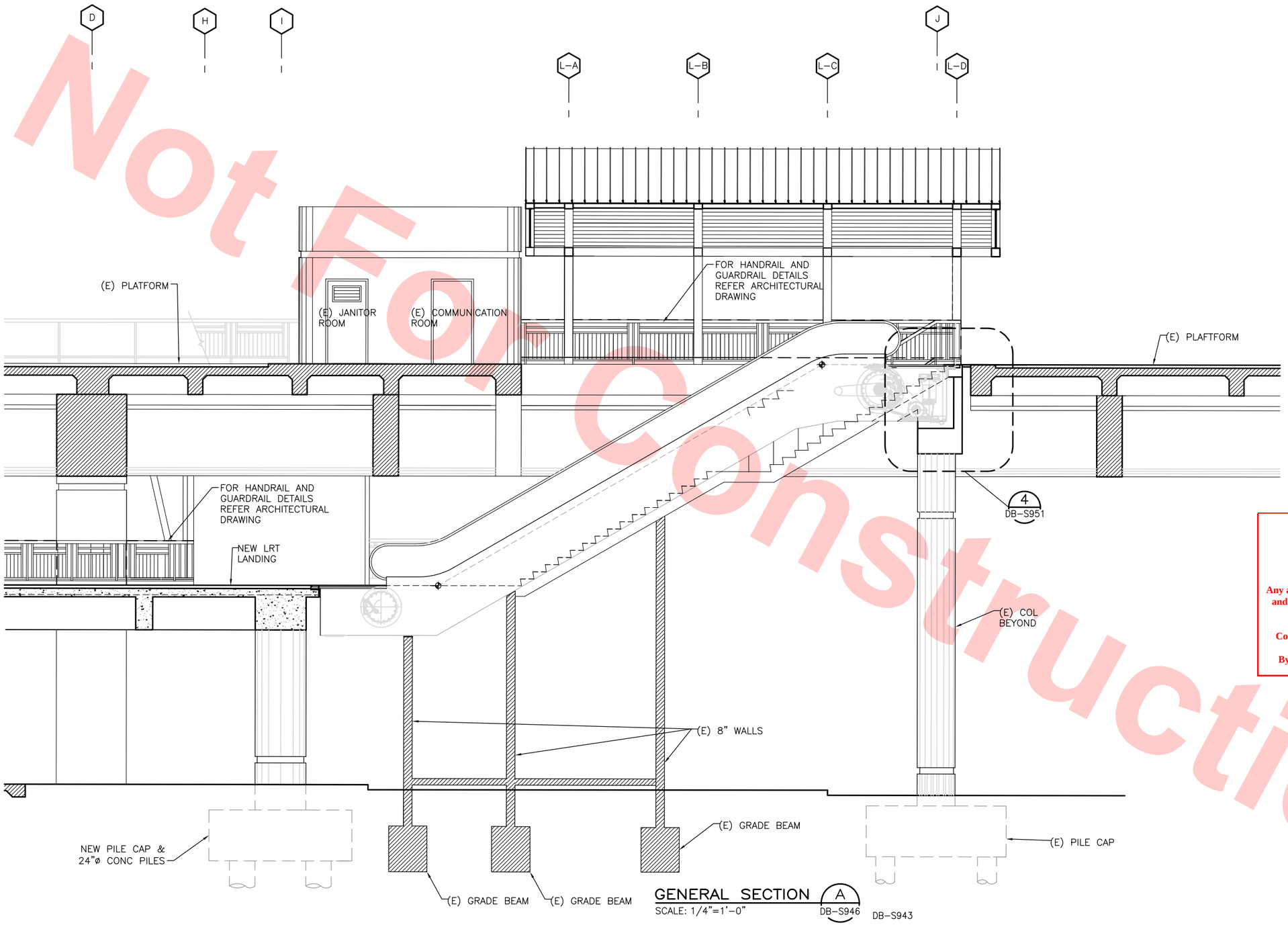

GENERAL SECTION (A) DB-S946 DB-S943
SCALE: 1/4"=1'-0"

Not For Construction

Santa Clara Valley Transportation Authority

____NO EXCEPTIONS TAKEN (NET)
____MAKE CORRECTIONS NOTED (MCN)
____AMEND AND RESUBMIT (A/R)

Any action shown above is subject to the terms of the contract and does not relieve the Contractor of any of its obligations under the contract, including design and detailing.

Contract No.: DB11002F

By: _____ Date: _____

REV	DATE	BY	SUB	APP	DESCRIPTION
0	20130710				READINESS FOR CONSTRUCTION

DESIGNED BY J. DUNLEA
DRAWN BY J. DUNLEA
CHECKED BY S. DEBNATH
IN CHARGE R. BARLAAN
DATE 20130710

REGISTERED PROFESSIONAL ENGINEER JOHN H. DUNLEA No. S 2932 Exp. 6-30-14 STRUCTURAL STATE OF CALIFORNIA

Skanska Shimmick Herzog
1436 California Circle
Milpitas, California 95035
A Joint Venture

Anil Verma Associates, Inc.
1970 Broadway, Suite 525
Oakland, CA 94612
Phone: (510) 835-2537 Fax: (510) 535-2339

Lockwood, Andrews & Newnam, Inc. A LEO A DALY COMPANY
T·Y·LIN INTERNATIONAL

SUBMITTED _____
APPROVED _____

VTA BART SILICON VALLEY
BART SILICON VALLEY BERRYESSA EXTENSION

LINE, TRACK, STATIONS AND SYSTEMS
DESIGN UNIT 023
MONTAGUE LRT AND MILPITAS POC

LRT ESCALATOR LES 1
DETAIL SECTION

CADD FILENAME C700-S-DB-S946.dwg
SIZE D | SCALE 1/4"=1'-0"
CONTRACT NO. C700 | REV. 0
AREA CODE DB | SHEET NO. S946 | PAGE NO. 0316

lumar Jun 28, 2013 - 1:01pm C:\projectwise\copy of copy of mbx-template (5) (1)\dms60946\C700-S-DB-S946.dwg

Santa Clara Valley Transportation Authority

____NO EXCEPTIONS TAKEN (NET)
____MAKE CORRECTIONS NOTED (MCN)
____AMEND AND RESUBMIT (A/R)

Any action shown above is subject to the terms of the contract and does not relieve the Contractor of any of its obligations under the contract, including design and detailing.

Contract No.: DB11002F

By: _____ Date: _____

Not For Construction

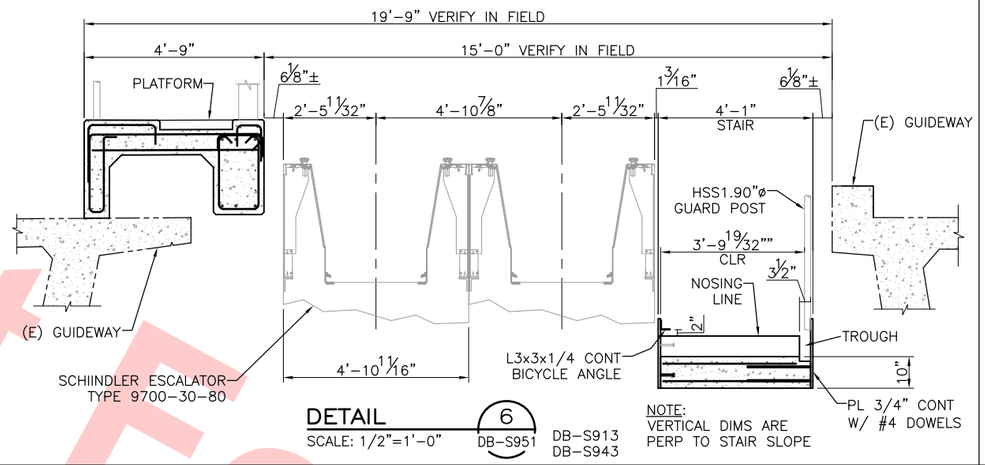

NOTE: VERTICAL DIMS ARE PERP TO STAIR SLOPE

DETAIL 6 — SCALE: 1/2"=1'-0" — DB-S951 — DB-S913, DB-S943

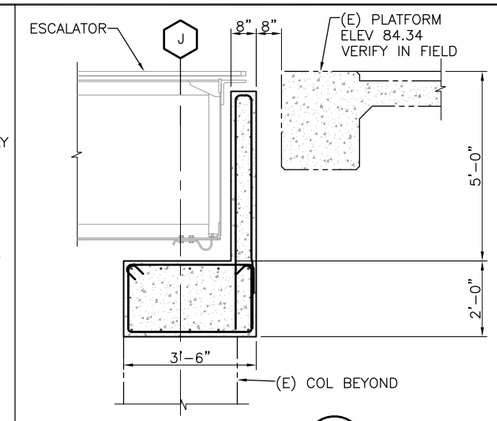

DETAIL 4 — SCALE: 1/2"=1'-0" — DB-S951 — DB-S946

NOTES:

1. XXX.

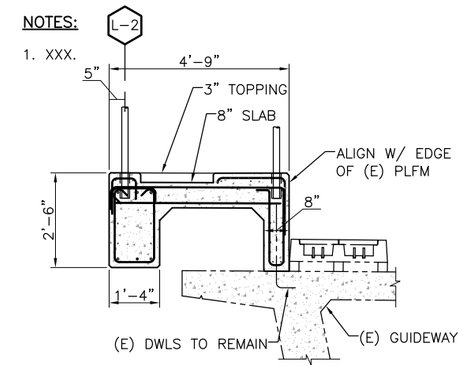

DETAIL 1 — SCALE: 1/2"=1'-0" — DB-S951 — DB-S943

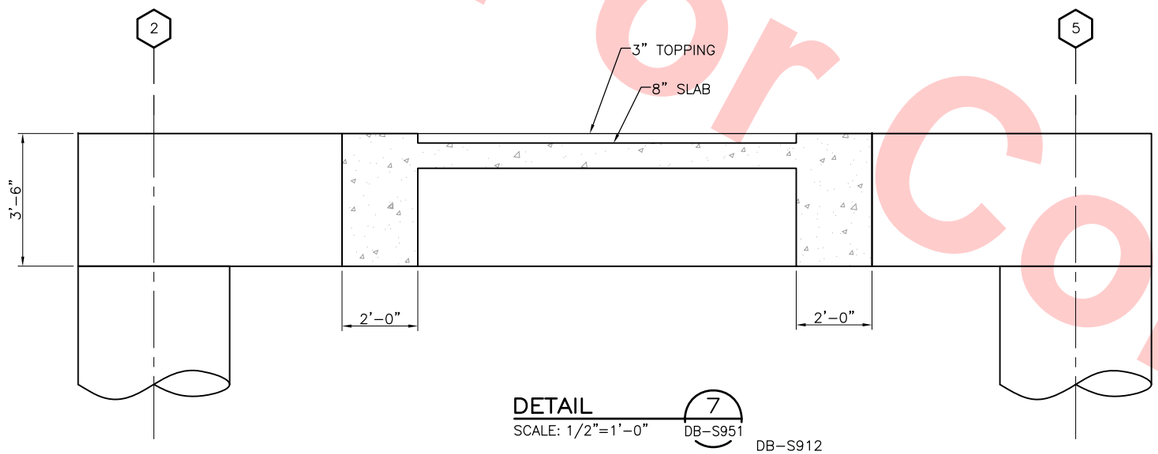

DETAIL 7 — SCALE: 1/2"=1'-0" — DB-S951 — DB-S912

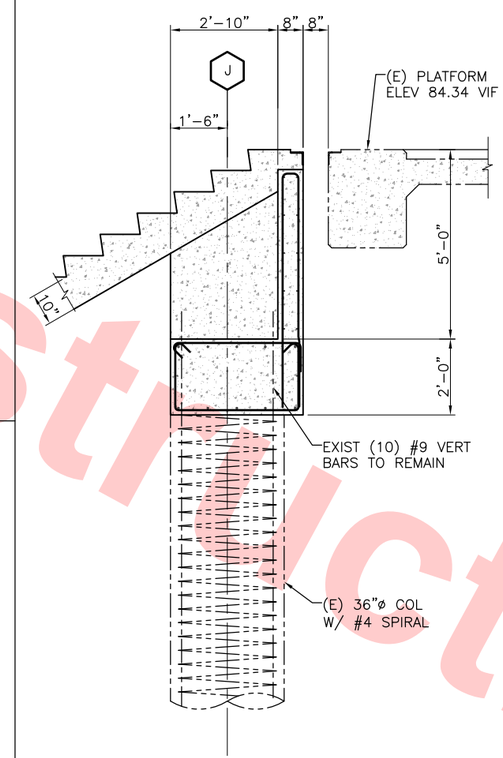

DETAIL 5 — SCALE: 1/2"=1'-0" — DB-S951 — DB-S945

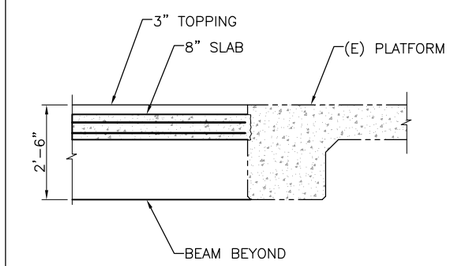

DETAIL 2 — SCALE: 1/2"=1'-0" — DB-S951 — DB-S943

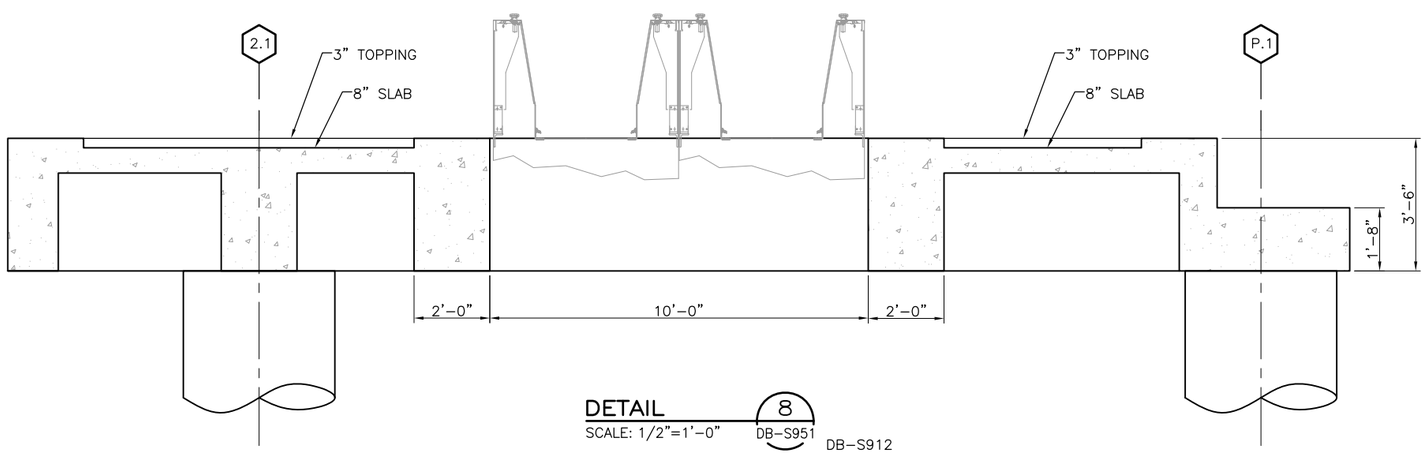

DETAIL 8 — SCALE: 1/2"=1'-0" — DB-S951 — DB-S912

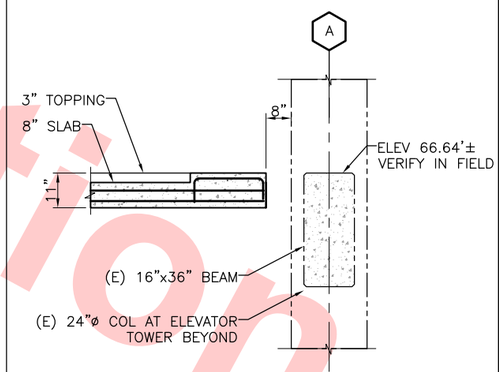

DETAIL 3 — SCALE: 1/2"=1'-0" — DB-S951 — DB-S912, DB-S945

REV	DATE	BY	SUB	APP	DESCRIPTION
0	20130710				READINESS FOR CONSTRUCTION

DESIGNED BY J. DUNLEA
DRAWN BY J. DUNLEA
CHECKED BY S. DEBNATH
IN CHARGE R. BARLAAN
DATE 20130710

REGISTERED PROFESSIONAL ENGINEER — JOHN H. DUNLEA — No. S 2932 — Exp. 6-30-14 — STRUCTURAL — STATE OF CALIFORNIA

Skanska Shimmick Herzog — 1436 California Circle, Milpitas, California 95035 — A Joint Venture

Anil Verma Associates, Inc. — 1970 Broadway, Suite 525, Oakland, CA 94612 — Phone: (510) 835-2537 — Fax: (510) 535-2339

Lockwood, Andrews & Newnam, Inc. — A LEO A DALY COMPANY — T·Y·LIN INTERNATIONAL

SUBMITTED _____ APPROVED _____

VTA BART SILICON VALLEY — BART SILICON VALLEY BERRYESSA EXTENSION

LINE, TRACK, STATIONS AND SYSTEMS DESIGN UNIT 023
MONTAGUE LRT AND MILPITAS POC

LRT PLATFORM & LANDING DETAILS, SHEET 1 OF 2

CADD FILENAME C700-S-DB-S951.dwg
SIZE D — SCALE AS NOTED
CONTRACT NO. C700 — REV. 0
AREA CODE DB — SHEET NO. S951 — PAGE NO. 0317

lumar Jun 28, 2013 – 1:01pm C:\projectwise\copy of copy of mbx-template (5) (1)\dms60946\C700-S-DB-S951.dwg

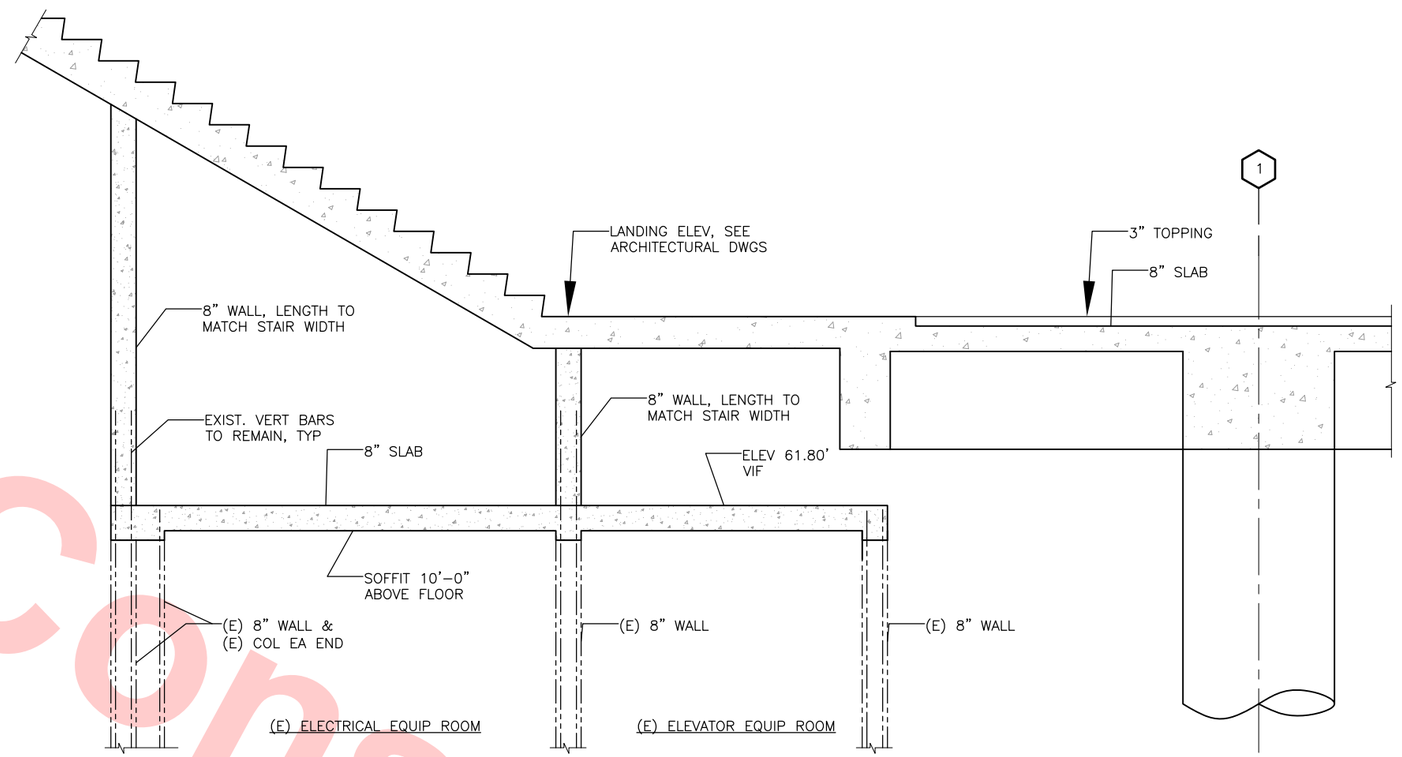

DETAIL 1 DB-S952
SCALE: 1/2"=1'-0"

Santa Clara Valley Transportation Authority

____NO EXCEPTIONS TAKEN (NET)
____MAKE CORRECTIONS NOTED (MCN)
____AMEND AND RESUBMIT (A/R)

Any action shown above is subject to the terms of the contract and does not relieve the Contractor of any of its obligations under the contract, including design and detailing.

Contract No.: DB11002F

By: _____ Date: _____

Not For Construction

REV	DATE	BY	SUB	APP	DESCRIPTION
0	20130710				READINESS FOR CONSTRUCTION

DESIGNED BY J. DUNLEA
DRAWN BY J. DUNLEA
CHECKED BY S. DEBNATH
IN CHARGE R. BARLAAN
DATE 20130710

REGISTERED PROFESSIONAL ENGINEER JOHN H. DUNLEA No. S 2932 Exp. 6-30-14 STRUCTURAL STATE OF CALIFORNIA

Skanska Shimmick Herzog
1436 California Circle
Milpitas, California 95035
A Joint Venture

Anil Verma Associates, Inc.
1970 Broadway, Suite 525 Oakland, CA 94612
Phone: (510) 835-2537 Fax: (510) 835-2339

Lockwood, Andrews & Newnam, Inc. A CH2M HILL COMPANY
T·Y·LIN INTERNATIONAL

SUBMITTED _____
APPROVED _____

VTA BART SILICON VALLEY
BART SILICON VALLEY BERRYESSA EXTENSION

LINE, TRACK, STATIONS AND SYSTEMS
DESIGN UNIT 023
MONTAGUE LRT AND MILPITAS POC

LRT PLATFORM & LANDING
DETAILS, SHEET 2 OF 2

CADD FILENAME C700-S-DB-S952.dwg
SIZE D | SCALE AS NOTED
CONTRACT NO. C700 | REV. 0
AREA CODE DB | SHEET NO. S952 | PAGE NO. 0318

lumar Jun 28, 2013 - 12:49pm C:\projectwise\copy of copy of mbx-template (5) (1)\dms60946\C700-S-DB-S952.dwg

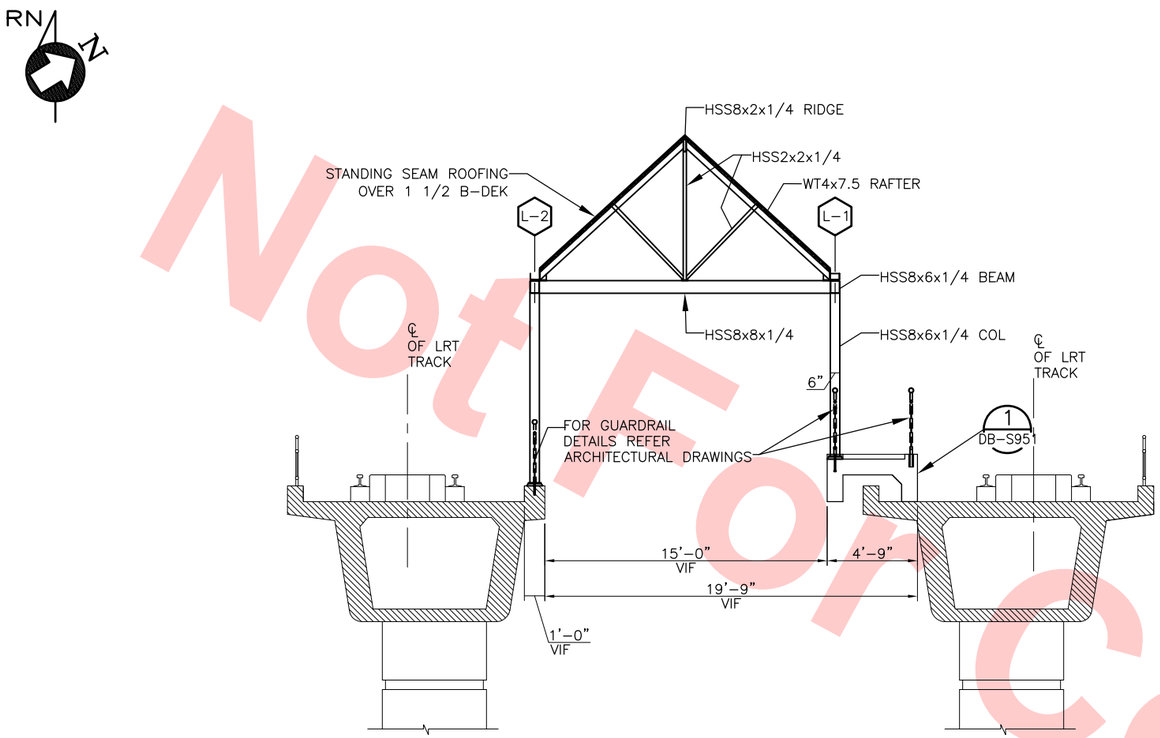

LRT CANOPY SECTION (2 / DB-S961)
SCALE: 1/4"=1'-0"
DB-S943
DB-S945

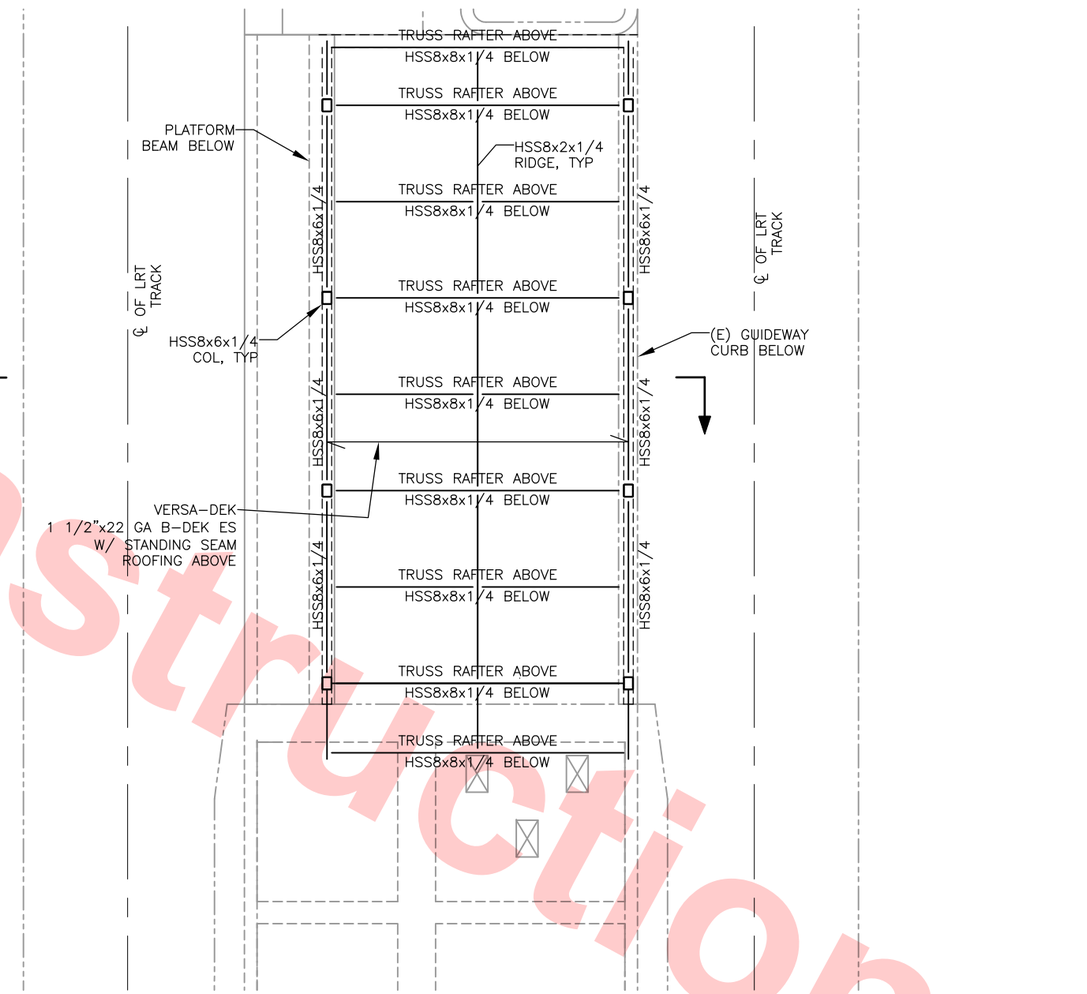

LRT CANOPY ROOF PLAN (1 / DB-S961)
SCALE: 1/4"=1'-0"
DB-S945

4' 0' 4' 8'
GRAPHIC SCALE

Santa Clara Valley Transportation Authority

____NO EXCEPTIONS TAKEN (NET)
____MAKE CORRECTIONS NOTED (MCN)
____AMEND AND RESUBMIT (A/R)

Any action shown above is subject to the terms of the contract and does not relieve the Contractor of any of its obligations under the contract, including design and detailing.

Contract No.: DB11002F

By: _____ **Date:** _____

Not For Construction

REV	DATE	BY	SUB	APP	DESCRIPTION
0	20130710				READINESS FOR CONSTRUCTION

DESIGNED BY J. DUNLEA
DRAWN BY J. DUNLEA
CHECKED BY S. DEBNATH
IN CHARGE R. BARLAAN
DATE 20130710

REGISTERED PROFESSIONAL ENGINEER JOHN M. DUNLEA No. S 2932 Exp. 6-30-14 STRUCTURAL STATE OF CALIFORNIA

Skanska Shimmick Herzog
1436 California Circle
Milpitas, California 95035
A Joint Venture

Anil Verma Associates, Inc.
1970 Broadway, Suite 525 Oakland, CA 94612
Phone: (510) 835-2537 Fax: (510) 535-2339

Lockwood, Andrews & Newnam, Inc. A LEO A DALY COMPANY
T·Y·LIN INTERNATIONAL

SUBMITTED _____
APPROVED _____

VTA BART SILICON VALLEY
BART SILICON VALLEY BERRYESSA EXTENSION

LINE, TRACK, STATIONS AND SYSTEMS
DESIGN UNIT 023
MONTAGUE LRT AND MILPITAS POC

LRT CANOPY
PLAN AND DETAILS

CADD FILENAME C700-S-DB-S961.dwg
SIZE D | SCALE 1/4"=1'-0"
CONTRACT NO. C700 | REV. 0
AREA CODE DB | SHEET NO. S961 | PAGE NO. 0319

lurnar Jun 25, 2013 - 12:48pm C:\projectwise\copy of copy of mbx-template (5) (1)\dms60946\C700-S-DB-S961.dwg