DU-023

Skanska Shimmick Herzog
A Joint Venture in Association with LAN | TY Lin

SSH JV

Milpitas Station
Design Unit 023
Readiness for Construction
Architectural

SVBX C700

Wednesday, July 10, 2013

HALF SIZE
COPY

Lockwood, Andrews & Newnam, Inc.
A LEO A DALY COMPANY

TY·LIN INTERNATIONAL
engineers | planners | scientists

Not For Construction

Not For Construction

Santa Clara Valley Transportation Authority
____NO EXCEPTIONS TAKEN (NET)
____MAKE CORRECTIONS NOTED (MCN)
____AMEND AND RESUBMIT (A/R)
Any action shown above is subject to the terms of the contract and does not relieve the Contractor of any of its obligations under the contract, including design and detailing.
Contract No.: DB11002F
By: ____________ Date: ____________

ABBREVIATIONS

AC	ASPHALTIC CONCRETE
ACOUS	ACOUSTICAL
ACT	ACOUSTICAL CEILING TILE
ACTR	ACOUSTICAL TREATMENT
AD	AREA DRAIN
ADJ	ADJUSTABLE
AFC	AUTOMATIC FARE COLLECTION
AFF	ABOVE FINISH FLOOR
AFM	ADD FARE MACHINE
AG	ABOVE GROUND
ALUM	ALUMINUM
ALT	ALTERNATE
AP	ACCESS PANEL
APPROX	APPROXIMATE
APT	ACOUSTICAL PANEL CEILING
ARA	AREA OF RESCUE ASSISTANCE
ARCH	ARCHITECTURAL
ASPH	ASPHALT
AUX	AUXILIARY
AVE	AVENUE
BC	BOTTOM OF CURB
BCM	BILL CHANGE MACHINE
BD	BOARD
BFS	BART FACILITIES STANDARDS
BITUM	BITUMINOUS
BLDG	BUILDING
BLKG	BLOCKING
BLS	BLUE LIGHT SWITCH STATION
BLVD	BOULEVARD
BM	BEAM
B/O	BOTTOM OF
BOS	BOTTOM OF SLAB
BOT	BOTTOM
BS	BOTTOM OF SLOPE
BSS	BUS SIGNAL SYSTEM
BTM	BUS TRANSFER MACHINE
CAB	CABINET
CAL	CALIPER
CB	CATCH BASIN
CCTV	CLOSED CIRCUIT TV CAMERA
CEM	CEMENT
CER	CERAMIC
CF	CUBIC FEET
CI	CAST IRON
CJ	CONTROL JOINT
℄	CENTER LINE
CLG	CEILING
CLKG	CAULKING
CLO	CLOSET
CLR	CLEAR
CMU	CONCRETE MASONRY UNIT
CO	CLEAN OUT
CNTR	COUNTER
COL	COLUMN
COMM	COMMUNICATION(S)
COMP	COMPOSITE
CONC	CONCRETE
COND	CONDENSING
CONN	CONNECTION
CONST	CONSTRUCTION
CONT	CONTINUOUS
CORR	CORRIDOR
CPT	CARPET
CR	CARD READER
CSB	CUSTOMER SERVICE BUILDING
CT	CERAMIC TILE
CTR	CENTER
CTSK	COUNTERSUNK
DBL	DOUBLE
DEPT	DEPARTMENT
DET	DETAIL
DF	DRINKING FOUNTAIN
DIA	DIAMETER

DIM	DIMENSION
DIS	DISPENSER
DN	DOWN
DR	DOOR
DS	DOWNSPOUT
DSU	DESTINATION SIGN UNIT
DWG	DRAWING
E	EAST
(E)	EXISTING
EA	EACH
EE	EMERGENCY EXIT
EJ	EXPANSION JOINT
EL	ELEVATION
ELEC	ELECTRICAL
ELEV	ELEVATOR OR ELEVATION
EMER	EMERGENCY
EMP	EMERGENCY MANAGEMENT PANEL
ENCL	ENCLOSURE
ENGR	ENGINEER
EPXY	EPOXY
EQ	EQUAL
EQPT	EQUIPMENT
ESC	ESCALATOR
ESC	EMERGENCY SUPPLY CLOSET
EW	EACH WAY
EXH	EXHAUST
EXP	EXPANSION
EXPO	EXPOSED
EXT	EXTERIOR
FA	FIRE ALARM
FAI	FRESH AIR INTAKE
FAFM	FUTURE ADD FARE MACHINE
FB	FLAT BAR
FD	FLOOR DRAIN
FDN	FOUNDATION
FE(C)	FIRE EXTINGUISHER (CABINET)
FF	FINISH FLOOR
FG	FINISHED GRADE
FH	FIRE HYDRANT, FLAT HEAD
FHC	FIRE HOSE CABINET
FIN	FINISH
FL/FLR	FLOOR
FOC	FACE OF CONCRETE
FOF	FACE OF FINISH
FOM	FACE OF MASONRY
FOS	FACE OF STUDS
FPRF	FIREPROOF
FRP	FIBER REINFORCED PLASTIC
FS	FULL SIZE OR FLOOR SINK
FT	FOOT OR FEET
FTG	FOOTING
FR,FRMG	FRAME, FRAMING
FURR	FURRING
FUT	FUTURE
GA	GAUGE
GAL	GALLON
GALV	GALVANIZED
GB	GYPSUM BOARD OR GRAB BAR
GD	GRADE
GFRC	GLASS FIBER REINFORCED CONCRETE PANELS
GL	GLASS
GLAZ	GLAZING
GMU	GLASS MASONRY UNIT
GND/GRD	GROUND OR GRADE
GYP	GYPSUM
HB	HOSE BIBB
HDR	HEADER
HDPE	HIGH DENSITY POLYETHYLENE MEMBRANE
HDW	HARDWARE
HM	HOLLOW METAL
HORIZ	HORIZONTAL
HP	HIGH POINT
HR	HOUR
HT	HEIGHT

HWY	HIGHWAY
ID	INSIDE DIAMETER
IE	INVERT ELEVATION
INCL	INCLUDING
INSUL	INSULATION
INT	INTERIOR OR INTAKE
INV	INVERT
JAN	JANITOR (CLOSET)
JT(S)	JOINT(S)
KOP	KNOCKOUT PANEL
LA	LANDSCAPE ARCHITECT
LAM	LAMINATE
LAV	LAVATORY
LC	LANDSCAPE CONTRACTOR
LF	LINEAL FEET
LKR	LOCKER
LP	LOW POINT
LRT	LIGHT RAIL TRANSIT
LT	LIGHT
LTG	LIGHTING
LWP	LOWER WORKING POINT
MACH	MACHINE
MAINT	MAINTENANCE
MAR	MARBLE
MAT	MATERIAL
MAX	MAXIMUM
MEM	MEMBRANE
MECH	MECHANICAL
MET	METAL
MFR	MANUFACTURER
MH	MANHOLE
MIN	MINIMUM
MISC	MISCELLANEOUS
MO	MASONRY OPENING
MTD	MOUNTED
MTL	METAL
MUL	MULLION
N	NORTH
N/A	NOT APPLICABLE
NIC	NOT IN CONTRACT
NO/#	NUMBER
NOM	NOMINAL
N/R	NON-RELATED
NTS	NOT-TO-SCALE
O/	OVER
OA	OVERALL
OC	ON CENTER
OD	OUTSIDE DIAMETER
OFCI	OWNER-FURNISHED CONTRACTOR-INSTALLED
OH	OPPOSITE HAND
OPNG	OPENING
OPP	OPPOSITE
OTE	OVER TRACK EXHAUST
P	PAINT
PABX	PRIVATE AUTOMATIC BRANCH EXCHANGE
PART	PARTIAL
PCC	PRECAST CONCRETE
PERF	PERFORATED
PL	PLATE/PROPERTY LINE
PLAS	PLASTER
PLAM	PLASTIC LAMINATE
PLUM	PLUMBING
PLYWD	PLYWOOD
PNT	POINT
POC	PEDESTRIAN OVERCROSSING
PR	PAIR
PRKG	PARKING
PROP	PROPERTY
PT	PORCELAN TILE
PTD/R	PAPER TOWEL DISPENSER & RECEPTACLE
PVC	POLYVINYL CHLORIDE

QS	QUEUING SPACE
QT	QUARRY TILE
R	RISER
RA	RADIUS
RB	RESILIENT/RUBBER BASE
RD	ROOF DRAIN
REF	REFERENCE
REINF	REINFORCED
REQ'D	REQUIRED
REV	REVISION(S)
RN	REFERENCE NORTH
RM	ROOM
RO	ROUGH OPENING
ROW	RIGHT OF WAY
RT	RESILIENT TILE OR RIGHT
RT'G	RATING
RWL	RAIN WATER LEADER
S	SOUTH OR SLOPE
SC	SOLID CORE
SCD	SEAT COVER DISPENSER
SCHED	SCHEDULE
SD	SOAP DISPENSER
SEC	SECTION
SF	SQUARE FEET
SHT	SHEET
SHTS	SHEETS
SIM	SIMILAR
SLPA	SIGNAGE/LIGHTING/PUBLIC ADDRESS STRUCTURE
SLR	SEALER
SMD	SEE MECHANICAL DRAWINGS
SND	SANITARY NAPKIN DISPENSER
SNR	SANITARY NAPKIN RECEPTACLE
SPD	SEE PLUMBING DRAWINGS
SPEC	SPECIFICATION
SPKR	SPEAKER
SQ	SQUARE
SS/ ST STL	STAINLESS STEEL
ST	STONE TILE
STA	STATION
STC	SOUND TRANSMISSION CLASS
STD	STANDARD
STL	STEEL
STR	STAIR
STOR	STORAGE
STRL/ STRUCT	STRUCTURE/STRUCTURAL
SUSP	SUSPENDED
SV	SHEET VINYL
SYM	SYMMETRICAL
T	TREAD
TBD	TO BE DETERMINED
TC	TOP OF CURB
TC/C	TRAIN CONTROL AND COMMUNICATIONS
TD	TRENCH DRAIN
TEL	TELEPHONE
TER	TERAZZO
TERM	TERMINATION
THK	THICK
TI	TENANT IMPROVEMENT
TIM	TRAIN INFORMATION MONITOR
TN	TRUE NORTH
T/O	TOP OF
TOC	TOP OF CONCRETE
TOD	TRANSIT ORIENTED DEVELOPMENT
T/R, TOR	TOP OF RAIL
TOS	TOP OF STRUCTURE/STEEL OR SLAB

TOW	TOP OF WALL
TP	TOP OF PAVEMENT
TPD	TOILET PAPER DISPENSER
TPSS	TRACTION POWER SUB STATION
TV	TELEVISION
TVM(S)	TICKET VENDING MACHINE(S)
TVS	TUNNEL VENT SHAFT
TWA	TRANSPARENT WALL ASSEMBLY
TYP	TYPICAL
TS	TUBE STEEL
UG	UNDERGROUND
UL	UNDERWRITERS LABORATORIES
UNF	UNFINISHED
UON	UNLESS OTHERWISE NOTED
UR	URINAL
UWP	UPPER WORKING POINT
VCN	VERTICAL CIRCULATION NODE
VCT	VINYL COMPOSITION TILE
VCTB	VINYL COVERED TACKBOARD
VENT	VENTILATION
VERT	VERTICAL
VEST	VESTIBULE
VMS	VARIABLE MESSAGE SIGN
VWC	VINYL WALL COVERING
W	WEST
W/	WITH
WC	WATER CLOSET
WDW	WINDOW
WD	WOOD
WGT	WEIGHT
WO	WHERE OCCURS
W/O	WITHOUT
WP	WORKING POINT
WPF	WATERPROOF
WSP	WET STAND PIPE
WT	WEIGHT
WWF	WELDED WIRE FABRIC
WH	WATER HEATER

LEGEND

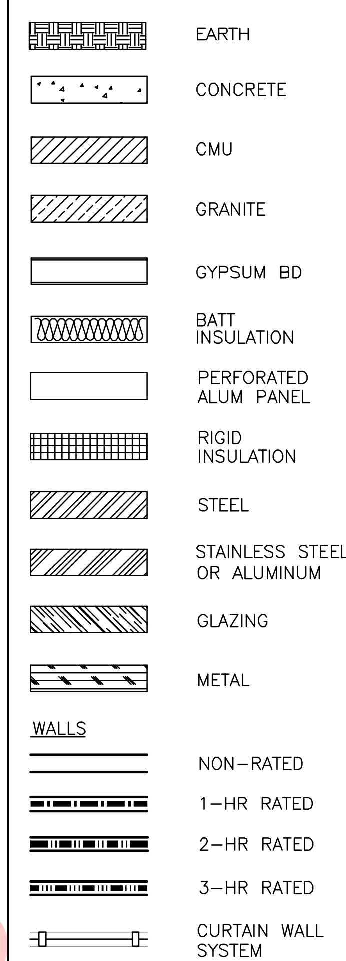

GENERAL NOTES

1. DIMENSIONS ARE TO CENTER OF STRUCTURAL GRID OR FACE OF FINISH, UON.
2. SEE DWG NO DB-A601, DB-A602 & DB-A603 FOR INTERIOR PARTITION SCHEDULE.
3. FOR TYPICAL EXTERIOR WALL ASSEMBLY, SEE A521 & A523.
4. FOR STRUCTURAL MEMBERS, HVAC EQUIPMENT, PLUMBING FIXTURES, PUBLIC ADDRESS EQUIPMENT, CCTV, AND ALL OTHER STRUCTURAL, MECHANICAL, PLUMBING, ELECTRICAL, COMMUNICATIONS, AND SECURITY WORK, REFER TO STRUCTURAL, MECHANICAL, PLUMBING, ELECTRICAL, AND COMMUNICATION DRAWINGS FOR FURTHER INFORMATION. ANY ELEMENTS FROM THESE DISCIPLINES SHOWN ON THE ARCHITECTURAL DRAWINGS ARE FOR REFERENCE ONLY.
5. "LIGHTING DESIGN BASIS" AS NOTED ON THE DRAWINGS REFERS TO THE "SVBX STATIONS DESIGN STATIONS LIGHTING DESIGN BASIS".
6. FOR LOUVER TYPES AND WINDOW SCHEDULE, SEE DWG NO DB-A721, DB-A722 & DB-A723.
7. FOR DOOR SCHEDULE, SEE DWG NO DB-A711, DB-A712 & DB-A713.
8. FOR FINISH SCHEDULE, SEE DWG NO DB-A701, DB-A702 & DB-A703.
9. FOR SITE LIGHTING, SEE DWG NO DB-E550, DB-E551, DB-E552 & DB-E553.
10. ALL EXPOSED STRUCTURAL MEMBERS TO VIEW SHALL BE PAINTED WITH INTUMESCENT FIREPROOFING.

ARCHITECTURAL SYMBOLS

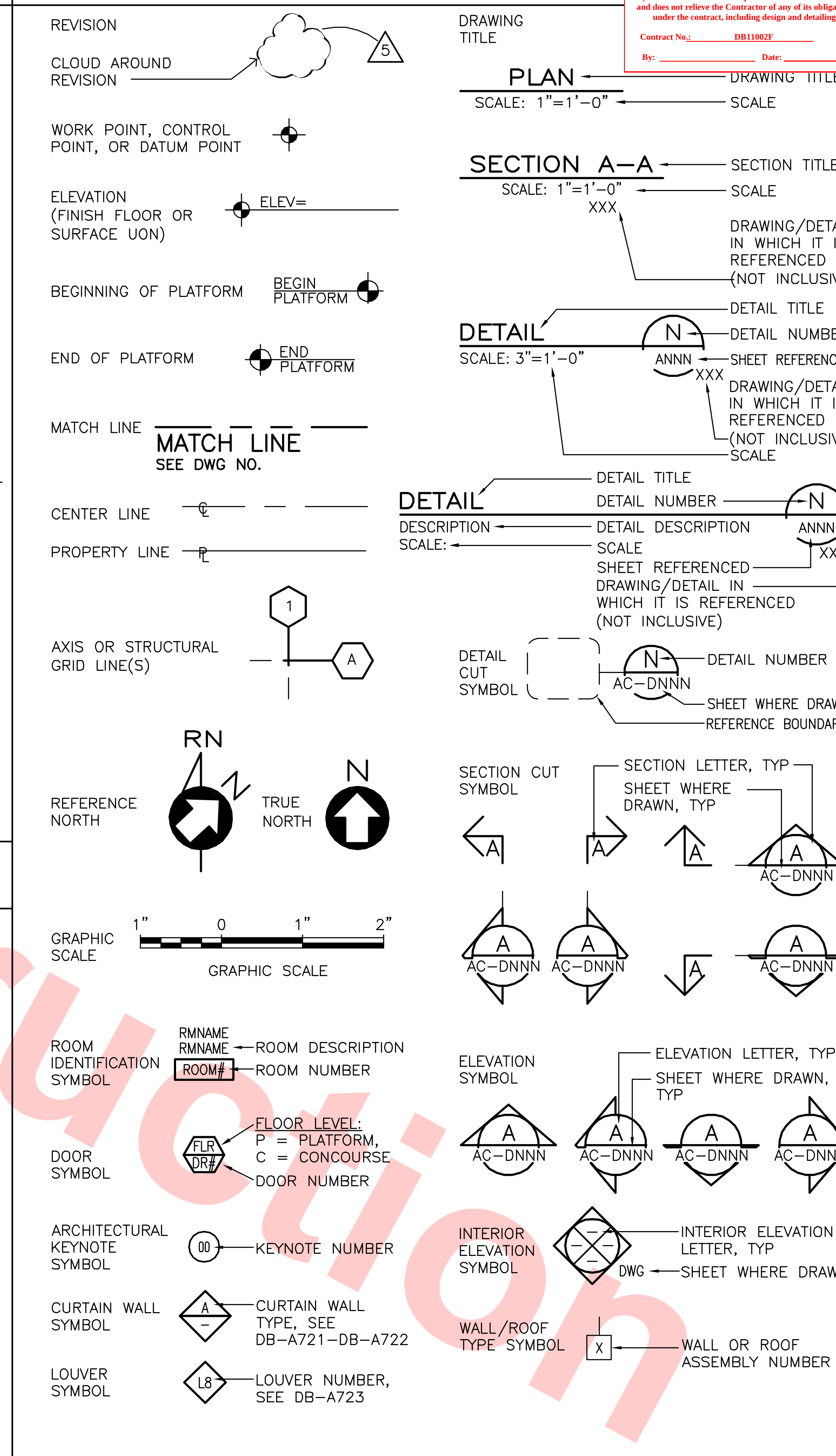

REV	DATE	BY	SUB	APP	DESCRIPTION
0	20130710				READINESS FOR CONSTRUCTION

DESIGNED BY	S. DEBNATH
DRAWN BY	R. COLLADO
CHECKED BY	E. BALLADA
IN CHARGE	R. BARLAAN
DATE	20130710

LICENSED ARCHITECT SOMESH DEBNATH No. C21523 Ren. 3/31/2015 STATE OF CALIFORNIA

Skanska Shimmick Herzog
1436 California Circle
Milpitas, California 95035
A Joint Venture

Anil Verma Associates, Inc.
1970 Broadway, Suite 525 Oakland, CA 94612
Phone: (510) 535-2537 Fax: (510) 535-2339
SUBMITTED

Lockwood, Andrews & Newnam, Inc. A LEO A DALY COMPANY
T·Y·LIN INTERNATIONAL
APPROVED

VTA BART SILICON VALLEY
BART SILICON VALLEY BERRYESSA EXTENSION

LINE, TRACK, STATIONS AND SYSTEMS
DESIGN UNIT 023
MILPITAS STATION

ARCHITECTURAL GENERAL NOTES, ABBREVIATIONS AND SYMBOLS

CADD FILENAME	C700-S-DB-A010.dwg
SIZE	D
SCALE	NONE
CONTRACT NO.	C700
REV.	0
AREA CODE	DB
SHEET NO.	A010
PAGE NO.	0320

JosephG Jun 26, 2013 - 1:18pm G:\Current Projects\VTA-Berryessa Extension Project\Station - Milpitas\CAD\Drawings Out\13-0710 C700 Milpitas Station - RFC SubmittC700-S-DB-A010.dwg

MASTER KEY NOTES

01 MAP CASE – WALL MOUNTED, BFS DET 4/AS83
02 AIR SHAFT
03 INFO KIOSK, THREE-SIDED, BFS DET 1/AS85
04 SMOKE EVACUATION FAN
05 NOT USED
06 BENCH
07 HVAC UNIT
08 TRASH RECEPTACLE
09 NEWSPAPER RECYCLING RECEPTACLE, NIC
10 NEWSPAPER RACK
11 LOCKERS
12 KITCHEN CASEWORK & FIXTURES
13 UTILITY SINK
14 SLPA AND SUPPORT (ABOVE/BELOW)
15 LIGHT FIXTURE
16 REMOVABLE LOUVERS
17 LINEAR FLUORESCENT DOWNLIGHT INTEGRAL WITH SLPA, SEE ELECTRICAL DRAWINGS
18 SPEAKER INTEGRAL WITH SLPA
19 PUBLIC PAY PHONE(S)
20 PLATFORM TRIP STATION, SEE SYSTEMS DWGS.
21 DESTINATION SIGN UNIT, SEE SYSTEMS DWGS.
22 SIGN (REFER TO SIGNAGE DRAWINGS)
23 TACTILE WARNING BAND, BFS DET 5/AS42
24 TACTILE DOOR INDICATOR, BFS DET 4/AS42
25 TACTILE (HAZARD WARNING) TILE, BFS DET 4/AS42
26 CEMENT PLASTER CONTROL JOINT
27 FINISH FLOORING – SEE FLOOR PATTERN DWGS.
28 FUTURE AFM, PER BFS
29 CONCRETE COLUMN
30 STRUCTURAL BEAM
31 STRUCTURAL MEMBER
32 FARE GATES, BFS SHT J005 & J006
33 ACCESSIBLE FARE GATE , PER BFS
34 FUTURE FARE GATES, PER BFS
35 BILL TO BILL CHANGER (BBC), PER BFS
36 TICKET VENDING MACHINE, BFS SHEET J001–J004
37 FUTURE TVM, PER BFS
38 ADD FARE/PARKING MACHINES, SEE BFS SHTS J001–J004
39 FUTURE ADD FARE/PARKING MACHINES
40 TRAIN INFORMATION MONITOR
41 BUS TRANSFER MACHINE, PER BFS
42 SERVICE GATE, BFS DET 1/AS70
43 END–OF–PLATFORM GATE, SEE BFS DET 1/AS70 – SIM.
44 REMOVABLE GUARDRAIL
45 GUARDRAIL ASSEMBLY – GLASS
46 STRUCTURAL COLUMN
47 ACOUSTICAL LOUVER
48 HANDRAIL – METAL
49 OVERHEAD COILING GRILLE
50 OVERHEAD COILING DOOR
51 ACCESS HATCH
52 DRINKING FOUNTAIN
53 BICYCLE RACK(S)
54 REMOVABLE GRATING COVER ABOVE
55 EMERGENCY EYE WASH
56 METAL COLUMN COVER TO MATCH COMPOSITE WALL PANEL WP–1
57 ARCH PROFILE, REFER TO SHEET DB–A505
58 GLASS WALL SYSTEM – TYPE 2
59 GLASS WALL SYSTEM – TYPE 3
60 GLASS WALL SYSTEM – TYPE 1
61 ART GLASS PANE (OWNER PROVIDED CONTRACTOR INSTALLED)
62 LOUVER
63 CATCH BASIN
64 METAL GUARDRAIL
65 CONCRETE BARRIER WALL
66 6" HIGH CONTAINMENT CURB AT ALL SIDES OF ROOM
67 FIRE EXTINGUISHER CABINET
68 FIRE HOSE CABINET WITH DELUGE VALVE – SEE FIRE PROTECTION DWGS & BFS SHEETS AS65 & AS67
69 SUSPENDED ACOUSTICAL TILE CEILING SYSTEM
70 CEILING TYPE 1– SUSPENDED LINEAR METAL CEILING SYSTEM
71 CEILING HATCH
72 GYPSUM BOARD CEILING
73 EXTERIOR WING WALL, COMPOSITE WALL PANEL WP–1 BOTH SIDES OF 8" STUDS
74 EXPOSED METAL DECK
75 HORIZONTAL STRUCTURAL POINT SUPPORTED GLASS SKYLIGHT SYSTEM
76 STRUCTURAL BRACING
77 MEMBRANE ROOFING
78 METAL ROOFING
79 SHORING WALL
80 PRE–CAST ARCHITECTURAL CONCRETE WALL PANEL, WP–3
81 COMPOSITE WALL PANEL WP–1, SEE DWG. DB–A701
82 CONCRETE SLAB ABOVE
83 EDGE OF MAT SLAB, SEE STRUCTURAL DWG. NO. DB–S076
84 TRENCH INVERT SLAB
85 RETAINING WALL
86 SUPPLY RISER FROM CONCOURSE LEVEL
87 ALUMINUM CLADDING FILL IN SECTION, SEE SIGNAGE DWGS.
88 4"X8" ALUMINUM TUBE
89 ROOF WALK PAD
90 INSULATED ROLL–UP COUNTER DOOR
91 TILE – OFCI
92 THERMAL INSULATION R–13
93 RAILING – STAINLESS STEEL
94 PROVIDE PIPE SLEEVES IN THE FLOOR SLAB. SIZE, SPACING AND NO. AS REQUIRED. REFER TO COMMUNICATION DRAWINGS
95 BIRD/SAFETY NETTING
96 GUTTER
97 DOWNSPOUT/RAINWATER LEADER
98 TRENCH DRAIN
99 ROOF DRAIN AND OVERFLOW DRAIN
100 SMOKE DRAFT STOP
101 FIXED LADDER
102 DECORATIVE SS MESH
103 STATION AGENT'S BOOTH, PER BFS
104 WATER HEATER ABOVE CEILING
105 PERSONNEL LIFT
106 BLUE LIGHT ALCOVE
107 STAIR PLATFORM
108 PERFORATED PERIMETER DRAIN
109 WATER PROOFING MEMBRANE
110 S.S. HANDRAIL – LED LIGHTED
111 METAL PANEL
112 FLOOR CLEANING MACHINE (NIC)
113 METAL WALL PANEL WP–2, SEE DWG. NO. DB–A701
114 METAL WALL PANEL – TYPE 2
115 FLOOR CLEANING MACHINE (NIC)
116 ARCHITECTURAL METAL FASCIA, RF–1, SEE DWG. DB–A701
117 SMOKE CONTROL LOUVERS
118 KNOCK–OUT CONCRETE SLAB – SEE STRUCTURAL DRAWINGS
119 FIRE EXTINGUISHER NICHE
120 FUTURE BTM
121 GLASS WALL SYSTEM – TYPE 4
122 SHAFT
123 WIRE FENCE
124 BUS SCHEDULE RACK
125 NOT USED
127 FIRE ALARM PULL STATION
131 GLASS BARRIER
133 FM200 FIRE SUPPRESSION SYSTEM – SEE FIRE PROTECTION DRAWINGS
134 FIRE EXTINGUISHER
135 METAL COVER
139 PABX & EMERGENCY TELEPHONE LOCKED BOX, SEE COMM DWGS.
140 FIRE TELEPHONE LOCKED BOX, SEE COMM DRAWINGS
141 RECESSED DEFIBRILLATOR CABINET
144 WIND FENCE
145 SMOKE CONTROL FAN & DUCT
146 DECORATIVE STAINLESS STEEL MESH
147 METAL PANEL ACCENT BAND WP–1A, SEE DWG. DB–A701
149 CONCRETE TOPPING
150 COLORED GLASS BLOCK INSERT
151 ADVERTISEMENT FRAME SPACE
152 BICYCLE CHANNEL @ STAIRS #3 & #4 PER BFS
153 CEILING TYPE 2– SUSPENDED 24"x60" METAL PLANK CEILING SYSTEM
154 CEMENT PLASTER CEILING
155 CEMENT PLASTER FINISH
156 CORRECTIONAL GRADE LIGHT FIXTURE
157 LIGHT FIXTURE WITH OPEN CONDUIT
158 METAL VALANCE
159 VARIABLE MESSAGE SIGN (TRAIN INFORMATION MONITOR)
161 LOW WALL VENT AND VENT DUCT
163 SKYLIGHT SMOKE EVACUATION FAN
164 24" SQ X 12" DEEP SUMP PIT
165 PARKING VALIDATION MACHINE (PVM)
166 RAIL LUBRICATOR ALCOVE
168 FARE GATE COMPRESSOR
169 MAINTENANCE CATWALK
171 EQUIPMENT ACCESS ROOF HATCH
172 PERFORATED CORRUGATED STAINLESS STEEL PANEL
173 EMERGENCY FAN DAMPER MONITORING WINDOW
174 EMERGENCY FAN CONTROL PANEL
175 FIRE HOSE CONNECTION – SEE FIRE PROTECTION DWGS.
180 8" WALL EXPANSION JOINT COVER
181 SAFETY CHAIN (3 ROWS)
184 ART TILE–PROVIDED & INSTALLED BY OTHERS
185 REMOVABLE FLOOR GRATING
187 PUMP EXTRACTION EQUIPMENT HOIST ABOVE
188 VENT DUCT
189 8" WALL EXPANSION JOINT
190 8" FLOOR EXPANSION JOINT
191 SCUPPER DRAIN
192 8" ROOF EXPANSION JOINT

Santa Clara Valley Transportation Authority

____NO EXCEPTIONS TAKEN (NET)
____MAKE CORRECTIONS NOTED (MCN)
____AMEND AND RESUBMIT (A/R)

Any action shown above is subject to the terms of the contract and does not relieve the Contractor of any of its obligations under the contract, including design and detailing.

Contract No.: DB11002F

By: _____ **Date:** _____

Not For Construction

REV	DATE	BY	SUB	APP	DESCRIPTION
0	20130710				READINESS FOR CONSTRUCTION

DESIGNED BY S. DEBNATH
DRAWN BY B. ITURALDE
CHECKED BY E. BALLADA
IN CHARGE R. BARLAAN
DATE 20130710

LICENSED ARCHITECT SOMESH DEBNATH No. C21523 STATE OF CALIFORNIA

Skanska Shimmick Herzog
1436 California Circle
Milpitas, California 95035
A Joint Venture

Anil Verma Associates, Inc.
1970 Broadway, Suite 535 Oakland, CA 94612
Phone: (510) 835-2537 Fax: (510) 535-2339

Lockwood, Andrews & Newnam, Inc. A LAN & BALLY COMPANY

T·Y·LIN INTERNATIONAL

SUBMITTED _____
APPROVED _____

VTA BART SILICON VALLEY
BART SILICON VALLEY BERRYESSA EXTENSION

LINE, TRACK, STATIONS AND SYSTEMS
DESIGN UNIT 023
MILPITAS STATION

MASTER KEY NOTES

CADD FILENAME C700–S–DB–A011.dwg
SIZE D | SCALE NONE
CONTRACT NO. C700 | REV. 0
AREA CODE DB | SHEET NO. A011 | PAGE NO. 0321

JosephG Jun 26, 2013 – 1:18pm G:\Current Projects\VTA–Berryessa Extension Project\Station – Milpitas\CAD\Drawings Out\13–0710 C700 Milpitas Station – RFC Submit\C700–S–DB–A011.dwg

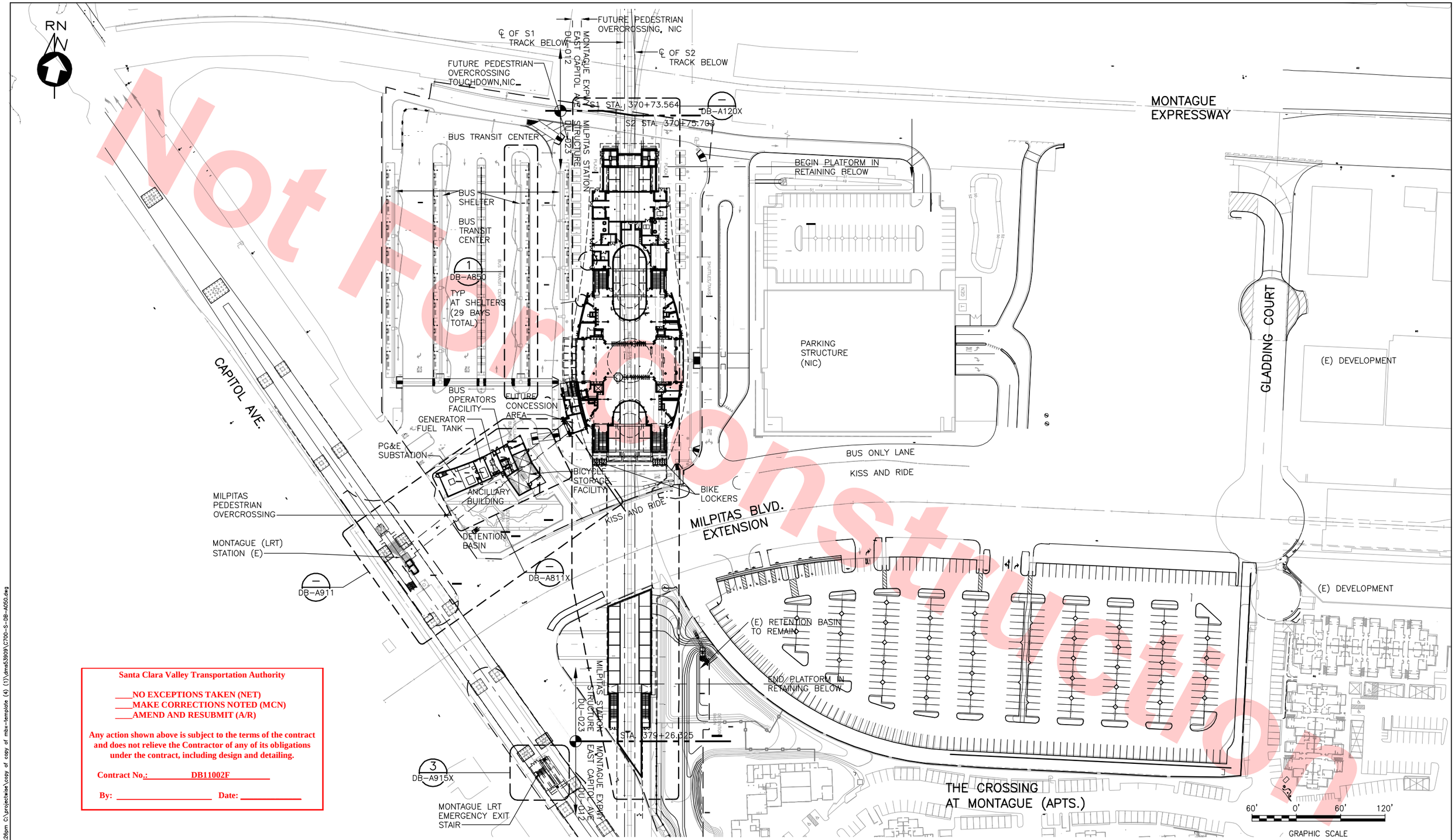

Not For Construction

Santa Clara Valley Transportation Authority

____NO EXCEPTIONS TAKEN (NET)
____MAKE CORRECTIONS NOTED (MCN)
____AMEND AND RESUBMIT (A/R)

Any action shown above is subject to the terms of the contract and does not relieve the Contractor of any of its obligations under the contract, including design and detailing.

Contract No.: DB11002F

By: _____ Date: _____

REV	DATE	BY	SUB	APP	DESCRIPTION
0	20130710				READINESS FOR CONSTRUCTION

DESIGNED BY S. DEBNATH
DRAWN BY R. COLLADO
CHECKED BY E. BALLADA
IN CHARGE R. BARLAAN
DATE 20130710

LICENSED ARCHITECT SOMESH DEBNATH No. C21523 STATE OF CALIFORNIA

Skanska Shimmick Herzog
1436 California Circle
Milpitas, California 95035
A Joint Venture

Anil Verma Associates, Inc.
1970 Broadway, Suite 555, Oakland, CA 94612
Phone: (510) 835-2537 Fax: (510) 835-2339

Lockwood, Andrews & Newnam, Inc. A LEO A DALY COMPANY

T·Y·LIN INTERNATIONAL

SUBMITTED

APPROVED

VTA BART SILICON VALLEY
BART SILICON VALLEY BERRYESSA EXTENSION

LINE, TRACK, STATIONS AND SYSTEMS
DESIGN UNIT 023
MILPITAS STATION

ARCHITECTURAL SITE KEY PLAN

CADD FILENAME C700-S-DB-A050.dwg
SIZE D
SCALE 1"=60'-0"
CONTRACT NO. C700
REV. 0
AREA CODE DB
SHEET NO. A050
PAGE NO. 0322

JosephG Jun 26, 2013 – 4:26pm C:\projectwise\copy of copy of mbx-template (4) (1)\dms53909\C700-S-DB-A050.dwg

Santa Clara Valley Transportation Authority

____NO EXCEPTIONS TAKEN (NET)
____MAKE CORRECTIONS NOTED (MCN)
____AMEND AND RESUBMIT (A/R)

Any action shown above is subject to the terms of the contract and does not relieve the Contractor of any of its obligations under the contract, including design and detailing.

Contract No.: DB11002F

By: _____ Date: _____

Not for Construction

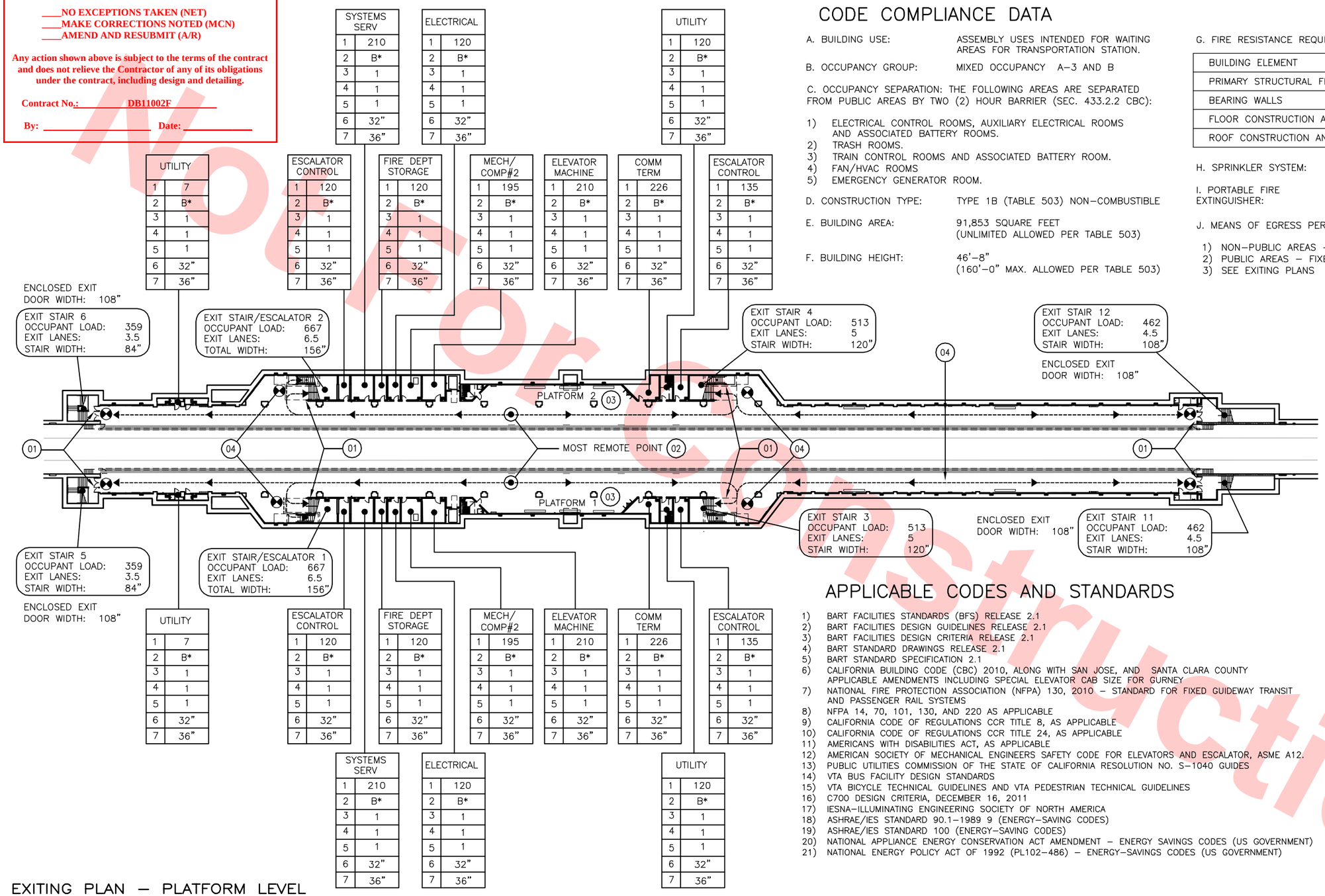

EXITING PLAN – PLATFORM LEVEL

SCALE: 1/32"=1'-0"

CODE COMPLIANCE DATA

A. BUILDING USE: ASSEMBLY USES INTENDED FOR WAITING AREAS FOR TRANSPORTATION STATION.

B. OCCUPANCY GROUP: MIXED OCCUPANCY A–3 AND B

C. OCCUPANCY SEPARATION: THE FOLLOWING AREAS ARE SEPARATED FROM PUBLIC AREAS BY TWO (2) HOUR BARRIER (SEC. 433.2.2 CBC):

1) ELECTRICAL CONTROL ROOMS, AUXILIARY ELECTRICAL ROOMS AND ASSOCIATED BATTERY ROOMS.
2) TRASH ROOMS.
3) TRAIN CONTROL ROOMS AND ASSOCIATED BATTERY ROOM.
4) FAN/HVAC ROOMS
5) EMERGENCY GENERATOR ROOM.

D. CONSTRUCTION TYPE: TYPE 1B (TABLE 503) NON–COMBUSTIBLE

E. BUILDING AREA: 91,853 SQUARE FEET (UNLIMITED ALLOWED PER TABLE 503)

F. BUILDING HEIGHT: 46'–8" (160'–0" MAX. ALLOWED PER TABLE 503)

G. FIRE RESISTANCE REQUIREMENTS PER TABLE 601

BUILDING ELEMENT	RATING
PRIMARY STRUCTURAL FRAME	2 HOUR
BEARING WALLS	2 HOUR
FLOOR CONSTRUCTION AND SECONDARY ELEMENTS	2 HOUR
ROOF CONSTRUCTION AND SECONDARY ELEMENTS	1 HOUR

H. SPRINKLER SYSTEM: PROVIDED (SEE FIRE PROTECTION DRAWINGS)

I. PORTABLE FIRE EXTINGUISHER: PROVIDED PER TABLE 906.3(1)

J. MEANS OF EGRESS PER THE FOLLOWING:

1) NON–PUBLIC AREAS – PER CHAPTER 10 CBC
2) PUBLIC AREAS – FIXED GUIDEWAY TRANSIT SYSTEM, SECTION 433.3 CBC
3) SEE EXITING PLANS

KEYNOTES

(01) TIME TO EVACUATE STATION PLATFORM TO EXIT POINT AT PEAK HOURS: 2.93 MIN (< 4 MIN, SEC. 433.3.2.2.2 CBC)

(02) MOST REMOTE POINT IS MEASURED AT <300 FEET TO POINT OF SAFETY AT CONCOURSE LEVEL. (SEC. 433.3.5 CBC)

(03) PLATFORM OCCUPANT LOAD = 2,000 BASED ON THE NUMBER OF PASSENGERS ON TRAINS SIMULTANEOUSLY ENTERING THE STATION ON ALL TRACKS IN NORMAL TRAFFIC TRAFFIC DIRECTION DURING PEAK 15 MIN PERIOD. SEC. 433.3.1.1 CBC

(04) OVERHEAD ILLUMINATED DIRECTIONAL EXIT SIGNS THROUGHOUT THE LENGTH OF STATION PLATFORM REFER TO SIGNAGE DRAWINGS.

APPLICABLE CODES AND STANDARDS

1) BART FACILITIES STANDARDS (BFS) RELEASE 2.1
2) BART FACILITIES DESIGN GUIDELINES RELEASE 2.1
3) BART FACILITIES DESIGN CRITERIA RELEASE 2.1
4) BART STANDARD DRAWINGS RELEASE 2.1
5) BART STANDARD SPECIFICATION 2.1
6) CALIFORNIA BUILDING CODE (CBC) 2010, ALONG WITH SAN JOSE, AND SANTA CLARA COUNTY APPLICABLE AMENDMENTS INCLUDING SPECIAL ELEVATOR CAB SIZE FOR GURNEY
7) NATIONAL FIRE PROTECTION ASSOCIATION (NFPA) 130, 2010 – STANDARD FOR FIXED GUIDEWAY TRANSIT AND PASSENGER RAIL SYSTEMS
8) NFPA 14, 70, 101, 130, AND 220 AS APPLICABLE
9) CALIFORNIA CODE OF REGULATIONS CCR TITLE 8, AS APPLICABLE
10) CALIFORNIA CODE OF REGULATIONS CCR TITLE 24, AS APPLICABLE
11) AMERICANS WITH DISABILITIES ACT, AS APPLICABLE
12) AMERICAN SOCIETY OF MECHANICAL ENGINEERS SAFETY CODE FOR ELEVATORS AND ESCALATOR, ASME A12.
13) PUBLIC UTILITIES COMMISSION OF THE STATE OF CALIFORNIA RESOLUTION NO. S–1040 GUIDES
14) VTA BUS FACILITY DESIGN STANDARDS
15) VTA BICYCLE TECHNICAL GUIDELINES AND VTA PEDESTRIAN TECHNICAL GUIDELINES
16) C700 DESIGN CRITERIA, DECEMBER 16, 2011
17) IESNA–ILLUMINATING ENGINEERING SOCIETY OF NORTH AMERICA
18) ASHRAE/IES STANDARD 90.1–1989 9 (ENERGY–SAVING CODES)
19) ASHRAE/IES STANDARD 100 (ENERGY–SAVING CODES)
20) NATIONAL APPLIANCE ENERGY CONSERVATION ACT AMENDMENT – ENERGY SAVINGS CODES (US GOVERNMENT)
21) NATIONAL ENERGY POLICY ACT OF 1992 (PL102–486) – ENERGY–SAVINGS CODES (US GOVERNMENT)

LEGEND

EXIT PATH OF TRAVEL (PER SECTION 433.3 CBC) ----------→

ROOM NAME →		STORAGE
FLOOR AREA (SQ. FT.) →	1	250
OCCUPANCY GROUP →	2	B
NO. OF OCCUPANT LOAD →	3	25
NO. OF EXITS REQUIRED →	4	1
NO. OF EXITS PROVIDED →	5	1
EXIT WIDTH REQUIRED (IN.) →	6	5"
EXIT WIDTH PROVIDED (IN.) →	7	36"

* INDICATES ACCESSORY TO BUILDING PRIMARY OCCUPANCY GROUP.

⊗ EXIT SIGN

32' 0' 32' 64'

GRAPHIC SCALE

REV	DATE	BY	SUB	APP	DESCRIPTION
0	20130710				READINESS FOR CONSTRUCTION

DESIGNED BY S. DEBNATH
DRAWN BY R. COLLADO
CHECKED BY E. BALLADA
IN CHARGE R. BARLAAN
DATE 20130710

LICENSED ARCHITECT SOMESH DEBNATH No. C21523 STATE OF CALIFORNIA

Skanska Shimmick Herzog
1436 California Circle
Milpitas, California 95035
A Joint Venture

Anil Verma Associates, Inc.
1970 Broadway, Suite 555, Oakland, CA 94612
Phone: (510) 835-2537 Fax: (510) 835-2339
SUBMITTED

Lockwood, Andrews & Newnam, Inc. A LEO A DALY COMPANY
T·Y·LIN INTERNATIONAL
APPROVED

VTA BART SILICON VALLEY
BART SILICON VALLEY BERRYESSA EXTENSION

LINE, TRACK, STATIONS AND SYSTEMS DESIGN UNIT 023
MILPITAS STATION

EXITING PLAN – PLATFORM LEVEL
CODE COMPLIANCE DATA

CADD FILENAME C700–S–DB–A051.dwg
SIZE D | SCALE 1/32"=1'–0"
CONTRACT NO. C700 | REV. 0
AREA CODE DB | SHEET NO. A051 | PAGE NO. 0323

JosephG Jun 26, 2013 – 4:13pm G:\Current Projects\VTA–Berryessa Extension Project\Station – Milpitas\CAD\Drawings Out\13–0710 C700 Milpitas Station – RFC Submittl\C700–S–DB–A051.dwg

TC/C HVAC	
1	240
2	B
3	1
4	1
5	1
6	32"
7	72"

BATTERY	
1	252
2	B*
3	1
4	1
5	1
6	32"
7	72"

STORAGE #1	
1	213
2	B*
3	1
4	1
5	1
6	32"
7	36"

COMM. TERM. #1	
1	214
2	B*
3	1
4	1
5	1
6	32"
7	36"

TR CONTROL /COMM	
1	2,748
2	B
3	28
4	1
5	2
6	32"
7	144"

HVAC	
1	219
2	B*
3	1
4	1
5	1
6	32"
7	72"

BREAK	
1	700
2	B
3	7
4	1
5	2
6	32"
7	72"

ELECTRICAL	
1	643
2	B*
3	3
4	1
5	2
6	32"
7	108"

TREASURY VAULT	
1	171
2	B
3	2
4	1
5	2
6	32"
7	108"

EMP	
1	201
2	B*
3	1
4	1
5	1
6	32"
7	36"

LOST & FOUND	
1	341
2	B
3	2
4	1
5	1
6	32"
7	36"

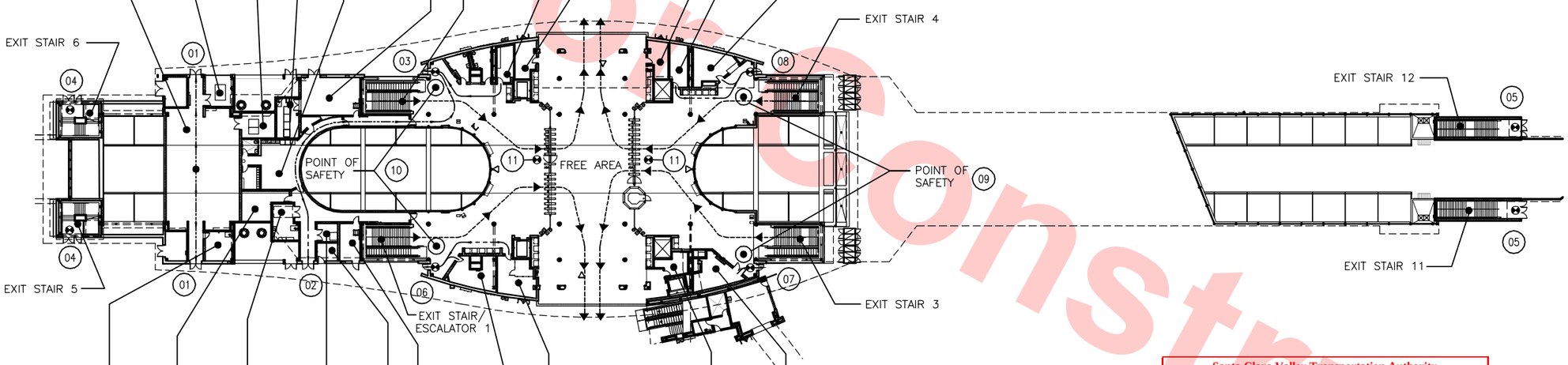

TC/ BATTERY	
1	240
2	B*
3	1
4	1
5	1
6	32"
7	36"

JANITOR	
1	235
2	B
3	2
4	1
5	1
6	32"
7	72"

TELCO	
1	107
2	B*
3	1
4	1
5	1
6	32"
7	36"

VALVE	
1	221
2	B*
3	1
4	1
5	1
6	32"
7	72"

POLICE/ INTERVIEW	
1	377
2	B
3	4
4	1
5	1
6	32"
7	36"

VTA COMM	
1	160
2	B
3	2
4	1
5	1
6	32"
7	36"

ELECTRICAL ROOM #1	
1	314
2	B*
3	1
4	1
5	1
6	32"
7	72"

ELEV/ESC STORAGE	
1	322
2	B*
3	2
4	1
5	2
6	32"
7	36"

STORAGE #2	
1	109
2	B*
3	1
4	1
5	1
6	32"
7	36"

MAINT. ENGR OFFICE	
1	391
2	B
3	4
4	1
5	1
6	32"
7	36"

EXIT DISCHARGE KEYNOTES

(01) EXIT DOOR WIDTH: 72"
OCCUPANT LOAD: 15

(02) EXIT DOOR WIDTH: 72"
OCCUPANT LOAD: 7

(03) EXIT DOOR WIDTH: 36"
OCCUPANT LOAD: 9

(04) EXIT DOOR WIDTH: 108"
OCCUPANT LOAD: 358 @ PEAK

(05) EXIT DOOR WIDTH: 108"
OCCUPANT LOAD: 462 @ PEAK

(06) EXIT DOOR WIDTH: 36"
OCCUPANT LOAD: 8

(07) EXIT DOOR WIDTH: 36"
OCCUPANT LOAD: 1

(08) EXIT DOOR WIDTH: 36"
OCCUPANT LOAD: 3

(09) WEST CONCOURSE
OCCUPANT LOAD: 1,479 PEOPLE

EVACUATION TIME TO POINT OF SAFETY FROM MOST REMOTE POINT AT PLATFORM AT PEAK HOURS: 3.86 MINUTES
(< 6 MIN, SEC. 433.2.2.3 CBC)

DISTANCE FROM MOST REMOTE POINT: 300 FT

(10) EAST CONCOURSE
OCCUPANT LOAD: 1,405 PEOPLE

EVACUATION TIME TO POINT OF SAFETY FROM MOST REMOTE POINT AT PLATFORM AT PEAK HOURS: 3.86 MINUTES
(< 6 MIN, SEC. 433.2.2.3 CBC)

DISTANCE FROM MOST REMOTE POINT: 300 FT

(11) ILLUMINATED DIRECTIONAL EXIT SIGN PER SIGNAGE DRAWINGS.

LEGEND

EXIT PATH OF TRAVEL (PER CHAPTER 10 CBC)

EXIT PATH OF TRAVEL (PER SECTION 433.3 CBC)

ROOM NAME		STORAGE
FLOOR AREA (SQ. FT.)	1	250
OCCUPANCY GROUP	2	B
NO. OF OCCUPANT LOAD	3	25
NO. OF EXITS REQUIRED	4	1
NO. OF EXITS PROVIDED	5	1
EXIT WIDTH REQUIRED (IN.)	6	5"
EXIT WIDTH PROVIDED (IN.)	7	36"

* INDICATES ACCESSORY TO BUILDING PRIMARY OCCUPANCY GROUP.

EXIT SIGN

32' 0' 32' 64'
GRAPHIC SCALE

Santa Clara Valley Transportation Authority

___NO EXCEPTIONS TAKEN (NET)
___MAKE CORRECTIONS NOTED (MCN)
___AMEND AND RESUBMIT (A/R)

Any action shown above is subject to the terms of the contract and does not relieve the Contractor of any of its obligations under the contract, including design and detailing.

Contract No.: DB11002F

By: _____ Date: _____

Not for Construction

EXITING PLAN – CONCOURSE LEVEL

SCALE: 1/32"=1'-0"

REV	DATE	BY	SUB	APP	DESCRIPTION
0	20130710				READINESS FOR CONSTRUCTION

DESIGNED BY S. DEBNATH
DRAWN BY R. COLLADO
CHECKED BY E. BALLADA
IN CHARGE R. BARLAAN
DATE 20130710

LICENSED ARCHITECT SANJEEV DEBNATH No. C21523 STATE OF CALIFORNIA

Skanska Shimmick Herzog
1436 California Circle
Milpitas, California 95035
A Joint Venture

Anil Verma Associates, Inc.
1970 Broadway, Suite 525, Oakland, CA 94612
Phone: (510) 835-2537 Fax: (510) 835-2339
SUBMITTED

Lockwood, Andrews & Newnam, Inc. A CH2M HILL COMPANY
T·Y·LIN INTERNATIONAL
APPROVED

VTA BART SILICON VALLEY
BART SILICON VALLEY BERRYESSA EXTENSION

LINE, TRACK, STATIONS AND SYSTEMS
DESIGN UNIT 023
MILPITAS STATION

EXITING PLAN
CONCOURSE LEVEL

CADD FILENAME C700-S-DB-A052.dwg
SIZE D | SCALE 1/32"=1'-0"
CONTRACT NO. C700 | REV. 0
AREA CODE DB | SHEET NO. A052 | PAGE NO. 0324

JosephG Jun 26, 2013 – 4:18pm G:\Current Projects\VTA-Berryessa Extension Project\Station – Milpitas\CAD\Drawings Out\13-0710 C700 Milpitas Station – RFC Submit\C700-S-DB-A052.dwg

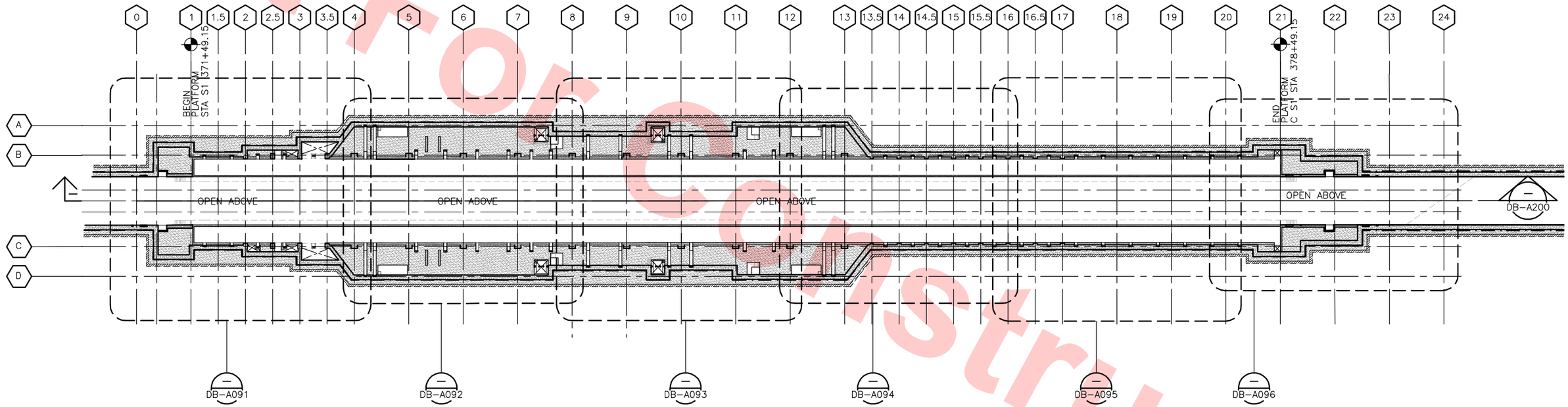

KEY PLAN —TRACK LEVEL

SCALE: 1/32"=1'-0"

Santa Clara Valley Transportation Authority

____NO EXCEPTIONS TAKEN (NET)
____MAKE CORRECTIONS NOTED (MCN)
____AMEND AND RESUBMIT (A/R)

Any action shown above is subject to the terms of the contract and does not relieve the Contractor of any of its obligations under the contract, including design and detailing.

Contract No.: DB11002F

By: _____ **Date:** _____

32' 0' 32' 64'

GRAPHIC SCALE

Not For Construction

REV	DATE	BY	SUB	APP	DESCRIPTION
0	20130710				READINESS FOR CONSTRUCTION

DESIGNED BY S. DEBNATH
DRAWN BY R. COLLADO
CHECKED BY E. BALLADA
IN CHARGE R. BARLAAN
DATE 20130710

LICENSED ARCHITECT SOMESH DEBNATH No. C21523 STATE OF CALIFORNIA

Skanska Shimmick Herzog
1436 California Circle
Milpitas, California 95035
A Joint Venture

Anil Verma Associates, Inc.
1970 Broadway, Suite 525 Oakland, CA 94612
Phone: (510) 835-2537 Fax: (510) 835-2339
SUBMITTED

Lockwood, Andrews & Newnam, Inc. A LEO A DALY COMPANY
T·Y·LIN INTERNATIONAL
APPROVED

VTA BART SILICON VALLEY
BART SILICON VALLEY BERRYESSA EXTENSION

LINE, TRACK, STATIONS AND SYSTEMS
DESIGN UNIT 023
MILPITAS STATION

KEY PLAN
TRACK LEVEL

CADD FILENAME C700-S-DB-A090.dwg
SIZE D | SCALE 1/32"=1'-0"
CONTRACT NO. C700 | REV. 0
AREA CODE DB | SHEET NO. A090 | PAGE NO. 0326

JosephG Jun 26, 2013 – 1:19pm G:\Current Projects\VTA-Berryessa Extension Project\Station – Milpitas\CAD\Drawings Out\13-0710 C700 Milpitas Station – RFC Submittt C700-S-DB-A090.dwg

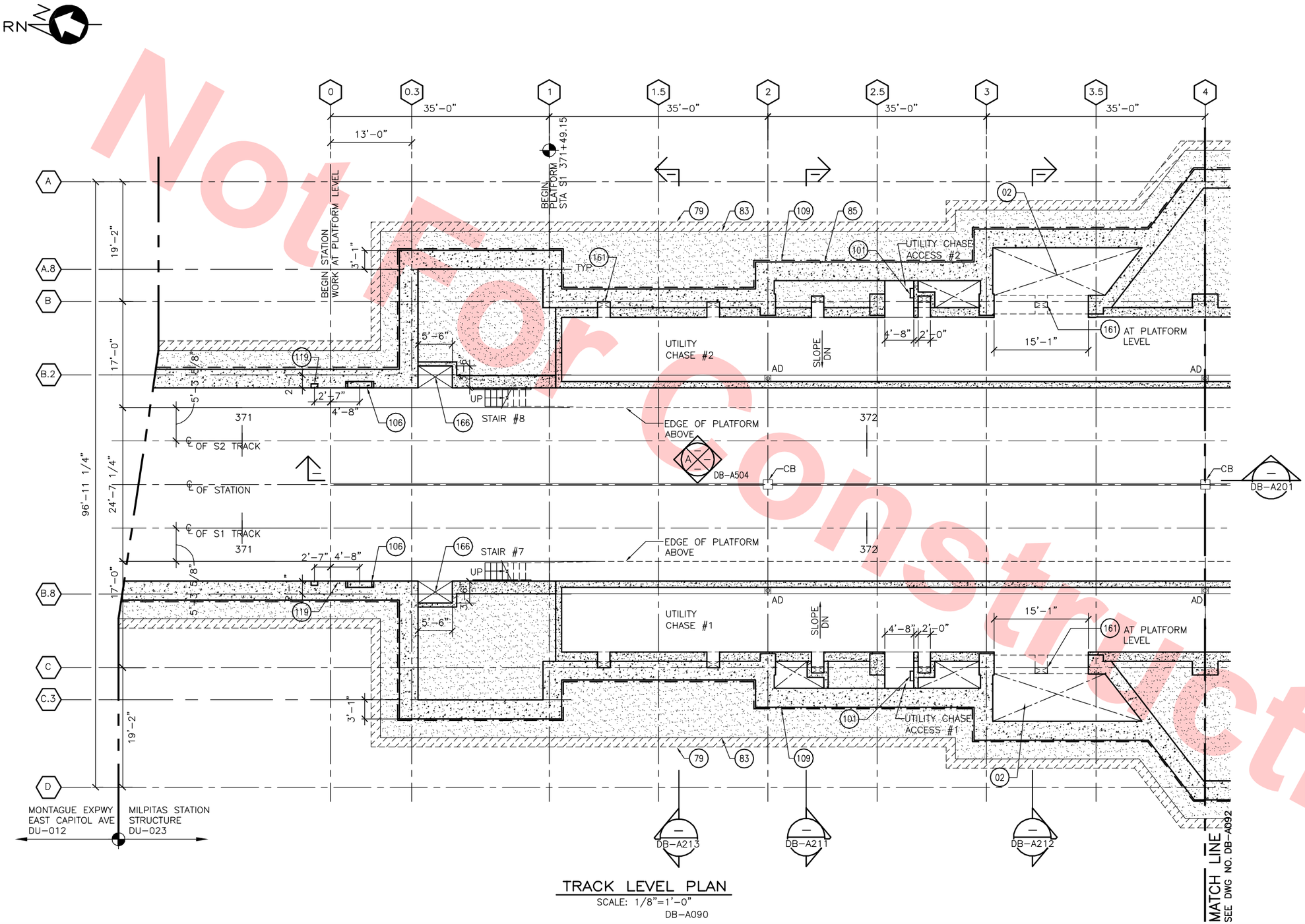

TRACK LEVEL PLAN

SCALE: 1/8"=1'-0"

DB-A090

KEY NOTES

- (02) AIR SHAFT
- (79) SHORING WALL
- (83) EDGE OF MAT SLAB SEE STRUCT DWG NO. DB-S071
- (85) RETAINING WALL
- (101) FIXED LADDER
- (106) BLUE LIGHT ALCOVE
- (109) WATER PROOFING MEMBRANE
- (119) FIRE EXTINGUISHER NICHE
- (161) LOW WALL VENT – FOR LOCATION REFER TO DWG NO. DB-A111X – DB-A116X
- (166) RAIL LUBRICATOR ALCOVE

NOTES

1. FLOOR PLAN IS SYMMETRICAL ABOUT THE CENTER LINE OF STATION. UNLESS INDICATED OTHERWISE, ELEMENTS, DIMENSIONS AND DETAILS ON ONE SIDE OF THE CENTERLINE ARE SAME AS THOSE ON THE OPPOSITE SIDE OF THE CENTERLINE.

Santa Clara Valley Transportation Authority

____NO EXCEPTIONS TAKEN (NET)
____MAKE CORRECTIONS NOTED (MCN)
____AMEND AND RESUBMIT (A/R)

Any action shown above is subject to the terms of the contract and does not relieve the Contractor of any of its obligations under the contract, including design and detailing.

Contract No.: DB11002F

By: _____ Date: _____

8' 0' 8' 16'

GRAPHIC SCALE

KEY PLAN

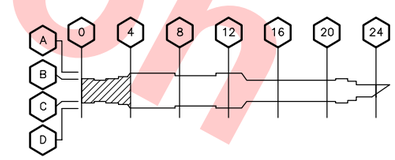

Not For Construction

REV	DATE	BY	SUB	APP	DESCRIPTION
0	20130710				READINESS FOR CONSTRUCTION

DESIGNED BY S. DEBNATH
DRAWN BY R. COLLADO
CHECKED BY E. BALLADA
IN CHARGE R. BARLAAN
DATE 20130710

LICENSED ARCHITECT SAMESH DEBNATH No. C21523 STATE OF CALIFORNIA

Skanska Shimmick Herzog
1436 California Circle
Milpitas, California 95035
A Joint Venture

Anil Verma Associates, Inc.
1970 Broadway, Suite 535 Oakland, CA 94612
Phone: (510) 835-2537 Fax: (510) 535-2339

SUBMITTED

Lockwood, Andrews & Newnam, Inc. A LAN & BALY COMPANY
T·Y·LIN INTERNATIONAL

APPROVED

VTA BART SILICON VALLEY

BART SILICON VALLEY BERRYESSA EXTENSION

LINE, TRACK, STATIONS AND SYSTEMS
DESIGN UNIT 023
MILPITAS STATION

TRACK LEVEL PLAN
SHEET 1 OF 6

CADD FILENAME C700-S-DB-A091.dwg
SIZE D | SCALE 1/8"=1'-0"
CONTRACT NO. C700 | REV. 0
AREA CODE DB | SHEET NO. A091 | PAGE NO. 0327

JosephG Jun 26, 2013 – 1:19pm G:\Current Projects\VTA-Berryessa Extension Project\Station – Milpitas\CAD\Drawings Out\13-0710 C700 Milpitas Station – RFC Submit\C700-S-DB-A091.dwg

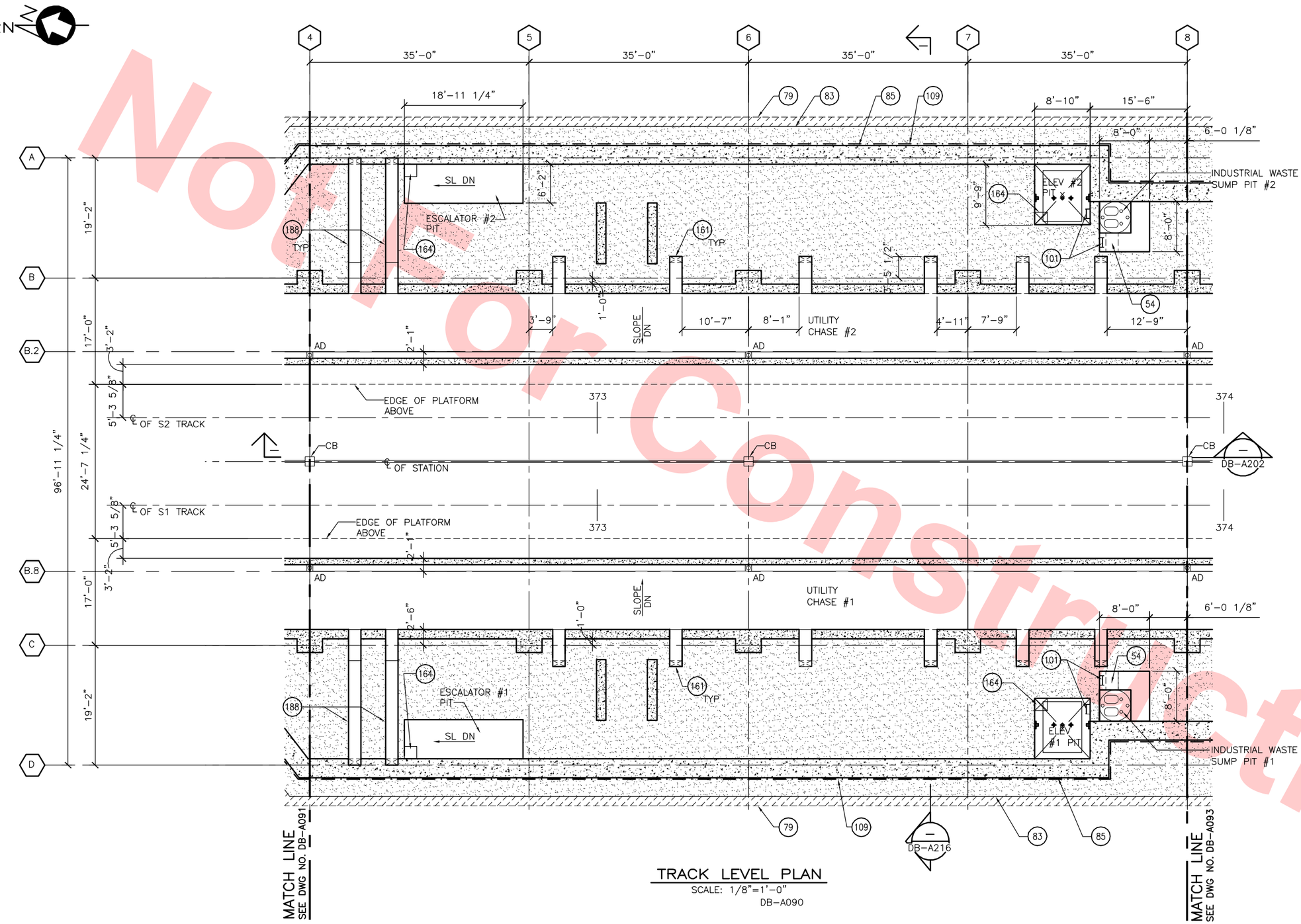

TRACK LEVEL PLAN

SCALE: 1/8"=1'-0"

DB-A090

KEY NOTES

- (54) REMOVABLE GRATING COVER ABOVE
- (79) SHORING WALL
- (83) EDGE OF MAT SLAB SEE STRUCT DWG NO DB-S072
- (85) RETAINING WALL
- (101) FIXED LADDER
- (109) WATER PROOFING MEMBRANE
- (161) LOW WALL VENT – FOR LOCATION REFER TO DWG NO. DB-A111X – DB-A116X
- (164) 24" SQ X 12" DEEP SUMP PIT
- (188) VENT DUCTS

NOTES

1. FLOOR PLAN IS SYMMETRICAL ABOUT THE CENTER LINE OF STATION. UNLESS INDICATED OTHERWISE, ELEMENTS, DIMENSIONS AND DETAILS ON ONE SIDE OF THE CENTERLINE ARE SAME AS THOSE ON THE OPPOSITE SIDE OF THE CENTERLINE.

Santa Clara Valley Transportation Authority

____NO EXCEPTIONS TAKEN (NET)
____MAKE CORRECTIONS NOTED (MCN)
____AMEND AND RESUBMIT (A/R)

Any action shown above is subject to the terms of the contract and does not relieve the Contractor of any of its obligations under the contract, including design and detailing.

Contract No.: DB11002F

By: _____ **Date:** _____

8' 0' 8' 16'

GRAPHIC SCALE

KEY PLAN

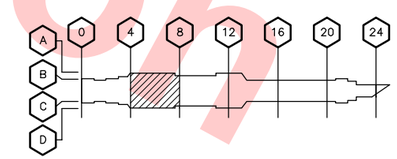

Not For Construction

REV	DATE	BY	SUB	APP	DESCRIPTION
0	20130710				READINESS FOR CONSTRUCTION

DESIGNED BY S. DEBNATH
DRAWN BY R. COLLADO
CHECKED BY E. BALLADA
IN CHARGE R. BARLAAN
DATE 20130710

LICENSED ARCHITECT SOMESH DEBNATH No. C21523 STATE OF CALIFORNIA

Skanska Shimmick Herzog
1436 California Circle
Milpitas, California 95035
A Joint Venture

Anil Verma Associates, Inc.
1970 Broadway, Suite 555, Oakland, CA 94612
Phone: (510) 835-2537 Fax: (510) 835-2339

Lockwood, Andrews & Newnam, Inc. A LBG & BALV COMPANY
T·Y·LIN INTERNATIONAL

SUBMITTED _____ APPROVED _____

VTA BART SILICON VALLEY
BART SILICON VALLEY BERRYESSA EXTENSION

LINE, TRACK, STATIONS AND SYSTEMS
DESIGN UNIT 023
MILPITAS STATION

TRACK LEVEL PLAN
SHEET 2 OF 6

CADD FILENAME C700-S-DB-A092.dwg
SIZE D | SCALE 1/8"=1'-0"
CONTRACT NO. C700 | REV. 0
AREA CODE DB | SHEET NO. A092 | PAGE NO. 0328

JosephG Jun 26, 2013 – 1:20pm G:\Current Projects\VTA-Berryessa Extension Project\Station – Milpitas\CAD\Drawings Out\13-0710 C700 Milpitas Station – RFC Submit\C700-S-DB-A092.dwg

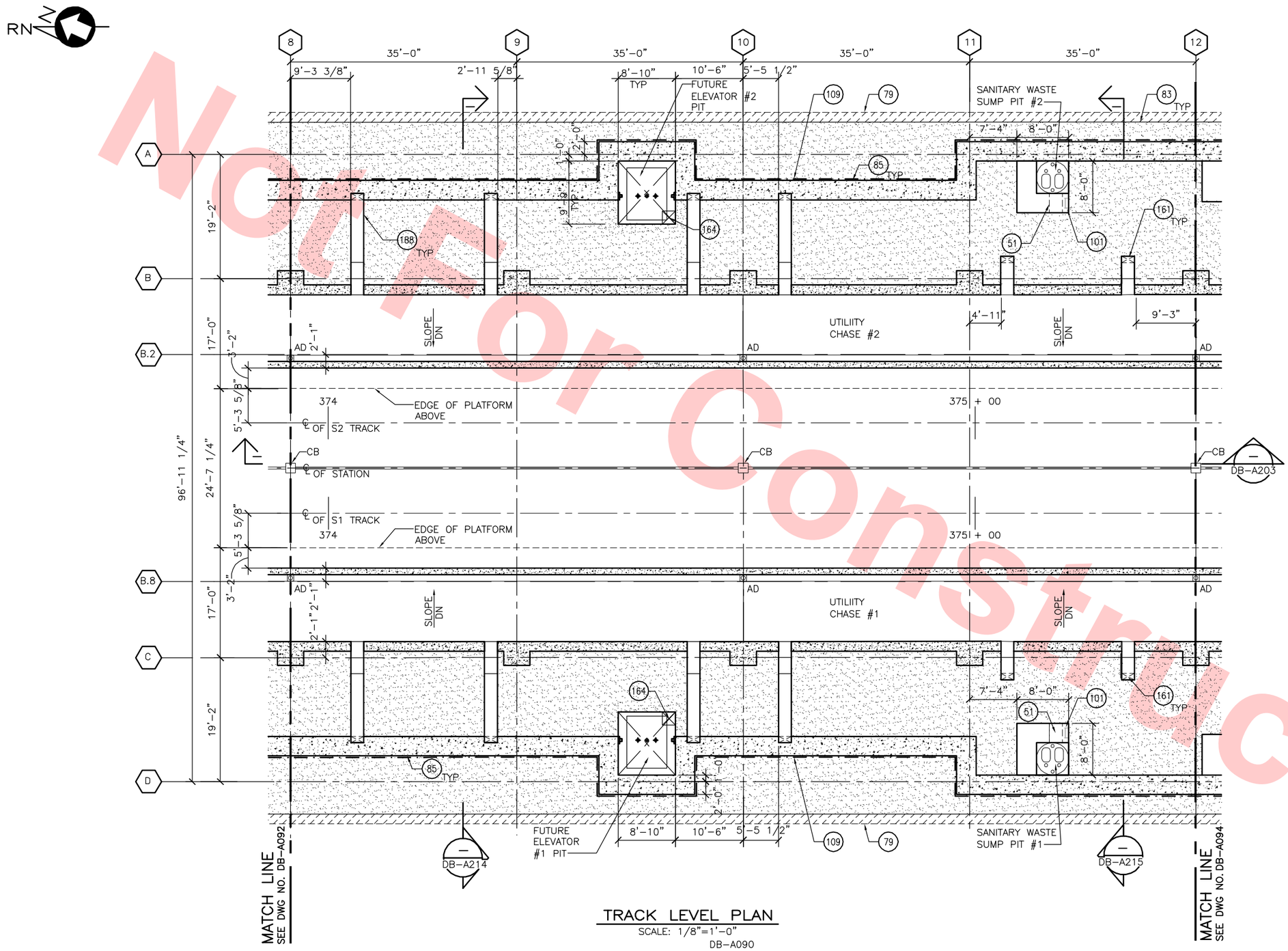

TRACK LEVEL PLAN

SCALE: 1/8"=1'-0"

DB-A090

KEY NOTES

- (51) REMOVABLE GRATING COVER ABOVE
- (79) SHORING WALL
- (83) EDGE OF MAT SLAB SEE STRUCT DWG NO DB-S073
- (85) RETAINING WALL
- (101) FIXED LADDER
- (109) WATER PROOFING MEMBRANE
- (161) LOW WALL VENT – FOR LOCATION REFER TO DWG NO. DB-A111X – DB-A116X
- (164) 24" SQ. X 12" DEEP SUMP PIT
- (188) VENT DUCT

NOTES

1. FLOOR PLAN IS SYMMETRICAL ABOUT THE CENTER LINE OF STATION. UNLESS INDICATED OTHERWISE, ELEMENTS, DIMENSIONS AND DETAILS ON ONE SIDE OF THE CENTERLINE ARE SAME AS THOSE ON THE OPPOSITE SIDE OF THE CENTERLINE.

Santa Clara Valley Transportation Authority

____NO EXCEPTIONS TAKEN (NET)
____MAKE CORRECTIONS NOTED (MCN)
____AMEND AND RESUBMIT (A/R)

Any action shown above is subject to the terms of the contract and does not relieve the Contractor of any of its obligations under the contract, including design and detailing.

Contract No.: DB11002F

By: _____ **Date:** _____

8' 0' 8' 16'

GRAPHIC SCALE

KEY PLAN

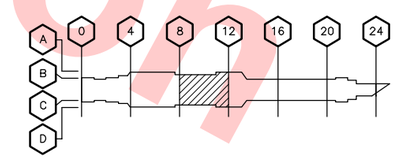

Not For Construction

REV	DATE	BY	SUB	APP	DESCRIPTION
0	20130710				READINESS FOR CONSTRUCTION

DESIGNED BY S. DEBNATH
DRAWN BY R. COLLADO
CHECKED BY E. BALLADA
IN CHARGE R. BARLAAN
DATE 20130710

LICENSED ARCHITECT SOMESH DEBNATH No. C21523 STATE OF CALIFORNIA

Skanska Shimmick Herzog
1436 California Circle
Milpitas, California 95035
A Joint Venture

Anil Verma Associates, Inc.
1970 Broadway, Suite 525, Oakland, CA 94612
Phone: (510) 835-2537 Fax: (510) 835-2339

Lockwood, Andrews & Newnam, Inc. A LEO A DALY COMPANY

T·Y·LIN INTERNATIONAL

SUBMITTED _____ APPROVED _____

VTA BART SILICON VALLEY

BART SILICON VALLEY BERRYESSA EXTENSION

LINE, TRACK, STATIONS AND SYSTEMS DESIGN UNIT 023
MILPITAS STATION

TRACK LEVEL PLAN
SHEET 3 OF 6

CADD FILENAME		
C700-S-DB-A093.dwg		
SIZE D	SCALE 1/8"=1'-0"	
CONTRACT NO. C700		REV. 0
AREA CODE DB	SHEET NO. A093	PAGE NO. 0329

JosephG Jun 26, 2013 – 1:20pm G:\Current Projects\VTA-Berryessa Extension Project\Station – Milpitas\CAD\Drawings Out\13-0710 C700 Milpitas Station – RFC Submit\C700-S-DB-A093.dwg

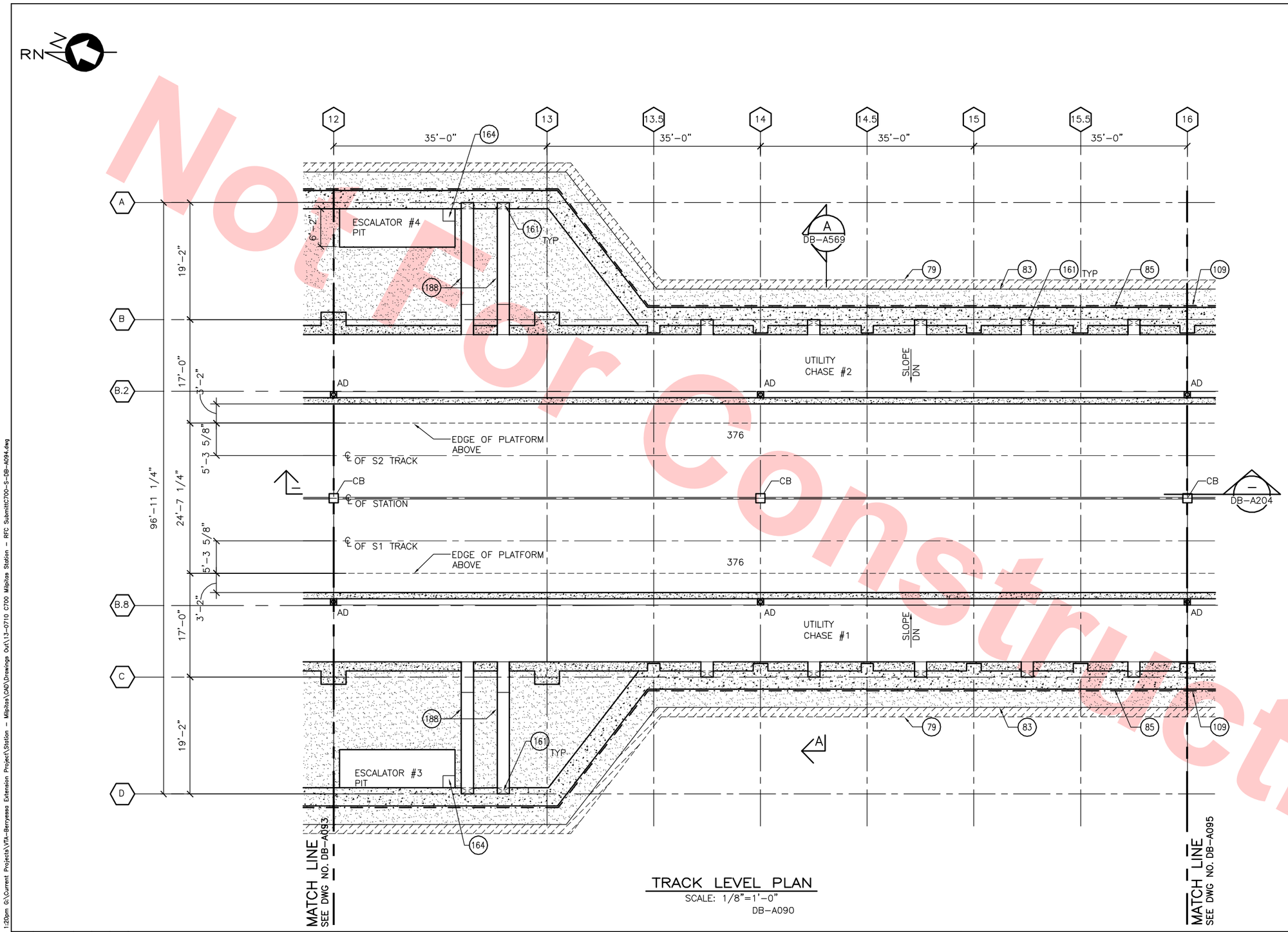

TRACK LEVEL PLAN
SCALE: 1/8"=1'-0"
DB-A090

KEY NOTES

- (79) SHORING WALL
- (83) EDGE OF MAT SLAB SEE STRUCT DWG NO DB-S074
- (85) RETAINING WALL
- (109) WATER PROOFING MEMBRANE
- (161) LOW WALL VENT – FOR LOCATION REFER TO DWG NO. DB-A111X – DB-A116X
- (164) 24" SQ X 12" DEEP SUMP PIT
- (188) VENT DUCT

NOTES

1. FLOOR PLAN IS SYMMETRICAL ABOUT THE CENTER LINE OF STATION. UNLESS INDICATED OTHERWISE, ELEMENTS, DIMENSIONS AND DETAILS ON ONE SIDE OF THE CENTERLINE ARE SAME AS THOSE ON THE OPPOSITE SIDE OF THE CENTERLINE.

Santa Clara Valley Transportation Authority

____NO EXCEPTIONS TAKEN (NET)
____MAKE CORRECTIONS NOTED (MCN)
____AMEND AND RESUBMIT (A/R)

Any action shown above is subject to the terms of the contract and does not relieve the Contractor of any of its obligations under the contract, including design and detailing.

Contract No.: DB11002F

By: _____ **Date:** _____

8' 0' 8' 16'
GRAPHIC SCALE

KEY PLAN

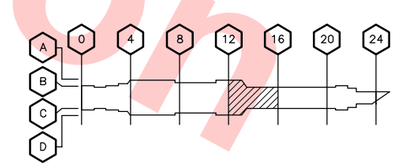

REV	DATE	BY	SUB	APP	DESCRIPTION
0	20130710				READINESS FOR CONSTRUCTION

DESIGNED BY S. DEBNATH
DRAWN BY R. GOLLADO
CHECKED BY E. BALLADA
IN CHARGE R. BARLAAN
DATE 20130710

LICENSED ARCHITECT SOMESH DEBNATH No. C21523 STATE OF CALIFORNIA

Skanska Shimmick Herzog
1436 California Circle
Milpitas, California 95035
A Joint Venture

Anil Verma Associates, Inc.
1970 Broadway, Suite 525 Oakland, CA 94612
Phone: (510) 835-2537 Fax: (510) 835-2339
SUBMITTED

Lockwood, Andrews & Newnam, Inc. A CH2M HILL COMPANY
T·Y·LIN INTERNATIONAL
APPROVED

VTA BART SILICON VALLEY
BART SILICON VALLEY BERRYESSA EXTENSION

LINE, TRACK, STATIONS AND SYSTEMS
DESIGN UNIT 023
MILPITAS STATION

TRACK LEVEL PLAN
SHEET 4 OF 6

CADD FILENAME C700-S-DB-A094.dwg
SIZE D | SCALE 1/8"=1'-0"
CONTRACT NO. C700 | REV. 0
AREA CODE DB | SHEET NO. A094 | PAGE NO. 0330

JosephG Jun 26, 2013 – 1:20pm G:\Current Projects\VTA-Berryessa Extension Project\Station – Milpitas\CAD\Drawings Out\13-0710 C700 Milpitas Station – RFC Submittl\C700-S-DB-A094.dwg

Not For Construction

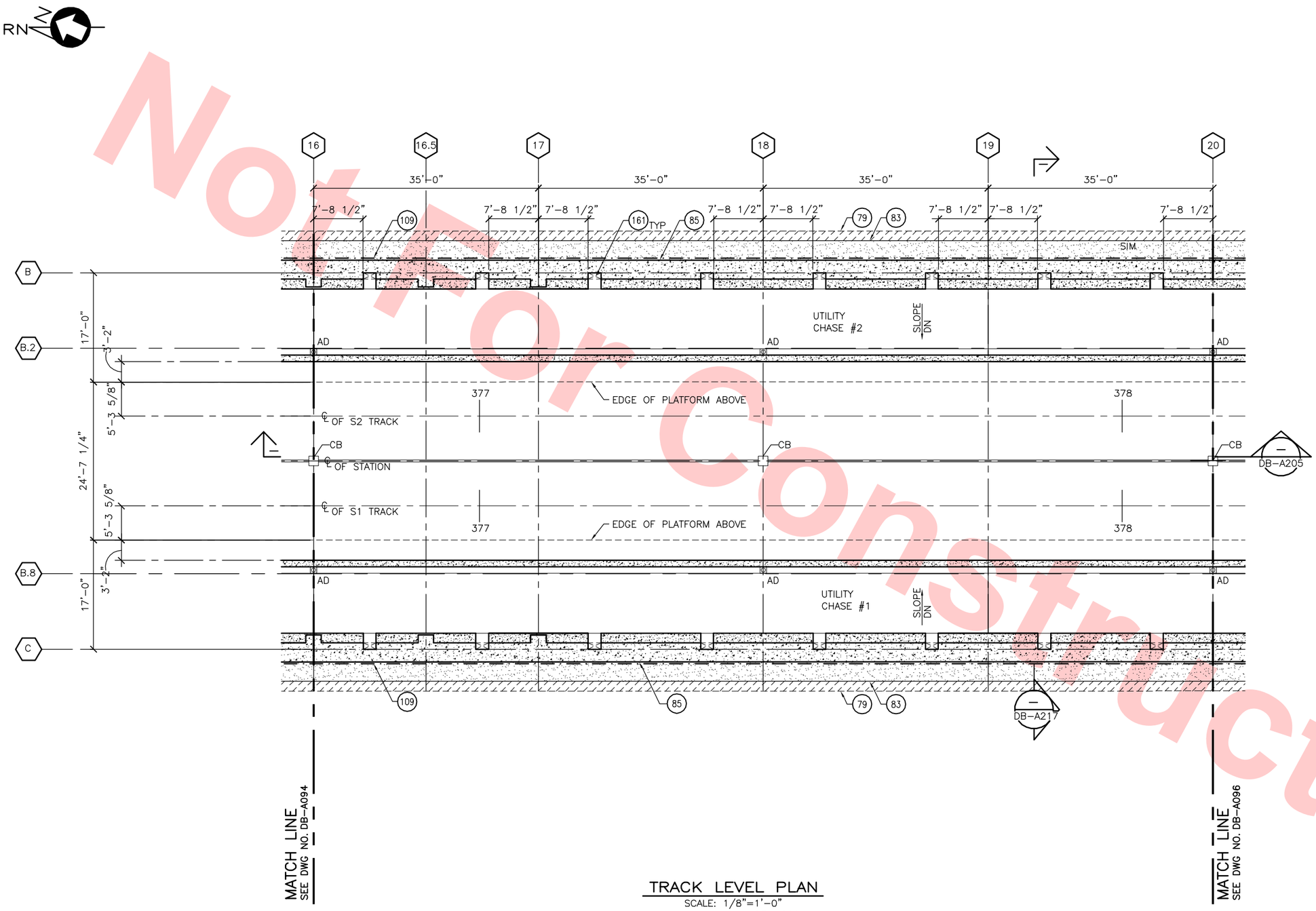

TRACK LEVEL PLAN
SCALE: 1/8"=1'-0"
DB-A090

KEY NOTES

- (79) SHORING WALL
- (83) EDGE OF MAT SLAB SEE STRUCT DWG NO DB-S075
- (85) RETAINING WALL
- (109) WATER PROOFING MEMBRANE
- (161) LOW WALL VENT – FOR LOCATION REFER TO DWG NO. DB-A111X – DB-A116X

NOTES

1. FLOOR PLAN IS SYMMETRICAL ABOUT THE CENTER LINE OF STATION. UNLESS INDICATED OTHERWISE, ELEMENTS, DIMENSIONS AND DETAILS ON ONE SIDE OF THE CENTERLINE ARE SAME AS THOSE ON THE OPPOSITE SIDE OF THE CENTERLINE.

Santa Clara Valley Transportation Authority

____NO EXCEPTIONS TAKEN (NET)
____MAKE CORRECTIONS NOTED (MCN)
____AMEND AND RESUBMIT (A/R)

Any action shown above is subject to the terms of the contract and does not relieve the Contractor of any of its obligations under the contract, including design and detailing.

Contract No.: DB11002F

By: _____ Date: _____

8' 0' 8' 16'
GRAPHIC SCALE

KEY PLAN

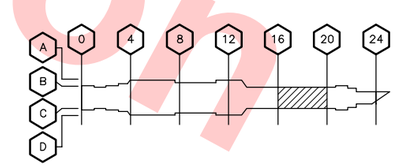

Not For Construction

REV	DATE	BY	SUB	APP	DESCRIPTION
0	20130710				READINESS FOR CONSTRUCTION

DESIGNED BY S. DEBNATH
DRAWN BY R. COLLADO
CHECKED BY E. BALLADA
IN CHARGE R. BARLAAN
DATE 20130710

LICENSED ARCHITECT SANJEEV DEBNATH No. C21523 STATE OF CALIFORNIA

Skanska Shimmick Herzog
1436 California Circle Milpitas, California 95035
A Joint Venture

Anil Verma Associates, Inc. 1970 Broadway, Suite 525 Oakland, CA 94612 Phone: (510) 835-2537 Fax: (510) 835-2339
SUBMITTED

Lockwood, Andrews & Newnam, Inc. A CH2M HILL COMPANY
T·Y·LIN INTERNATIONAL
APPROVED

VTA BART SILICON VALLEY
BART SILICON VALLEY BERRYESSA EXTENSION

LINE, TRACK, STATIONS AND SYSTEMS
DESIGN UNIT 023
MILPITAS STATION

TRACK LEVEL PLAN
SHEET 5 OF 6

CADD FILENAME C700-S-DB-A095.dwg
SIZE D | SCALE 1/8"=1'-0"
CONTRACT NO. C700 | REV. 0
AREA CODE DB | SHEET NO. A095 | PAGE NO. 0331

Joseph G Jun 26, 2013 – 12:21pm G:\Current Projects\VTA-Berryessa Extension Project\Station – Milpitas\CAD\Drawings Out\13-0710 C700 Milpitas Station – RFC Submit\C700-S-DB-A095.dwg

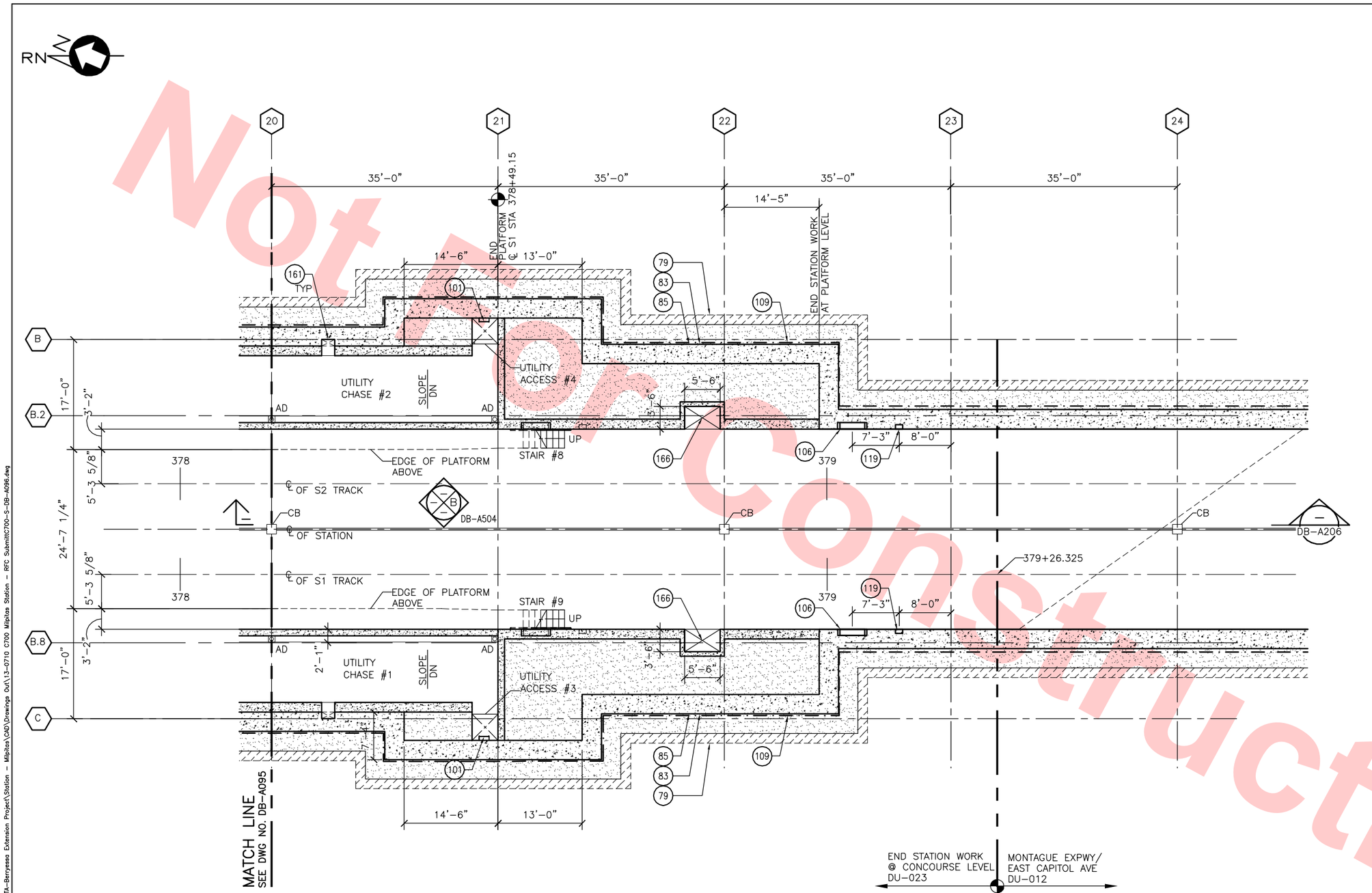

TRACK LEVEL PLAN

SCALE: 1/8"=1'-0"

DB-A090

KEY NOTES

- 13 UTILITY SINK
- 29 STRUCTURAL COLUMN
- 51 ACCESS HATCH
- 79 SHORING WALL
- 83 EDGE OF MAT SLAB SEE STRUCT DWG NO DB-S076
- 85 RETAINING WALL
- 101 FIXED LADDER
- 106 BLUE LIGHT ALCOVE
- 109 WATER PROOFING MEMBRANE
- 119 FIRE EXTINGUISHER NICHE
- 122 SHAFT
- 161 LOW WALL VENT – FOR LOCATION REFER TO DWG NO. DB-A111X – DB-A116X
- 166 RAIL LUBRICATOR ALCOVE

NOTES

1. FLOOR PLAN IS SYMMETRICAL ABOUT THE CENTER LINE OF STATION. UNLESS INDICATED OTHERWISE, ELEMENTS, DIMENSIONS AND DETAILS ON ONE SIDE OF THE CENTERLINE ARE SAME AS THOSE ON THE OPPOSITE SIDE OF THE CENTERLINE.

Santa Clara Valley Transportation Authority

____NO EXCEPTIONS TAKEN (NET)
____MAKE CORRECTIONS NOTED (MCN)
____AMEND AND RESUBMIT (A/R)

Any action shown above is subject to the terms of the contract and does not relieve the Contractor of any of its obligations under the contract, including design and detailing.

Contract No.: DB11002F

By: _____ **Date:** _____

8' 0' 8' 16'

GRAPHIC SCALE

KEY PLAN

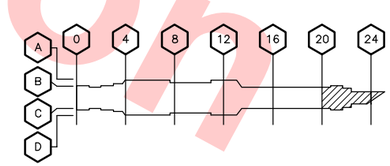

Not For Construction

REV	DATE	BY	SUB	APP	DESCRIPTION
0	20130710				READINESS FOR CONSTRUCTION

DESIGNED BY S. DEBNATH
DRAWN BY R. COLLADO
CHECKED BY E. BALLADA
IN CHARGE R. BARLAAN
DATE 20130710

LICENSED ARCHITECT SOMESH DEBNATH No. C21523 STATE OF CALIFORNIA

Skanska Shimmick Herzog
1436 California Circle
Milpitas, California 95035
A Joint Venture

Anil Verma Associates, Inc.
1970 Broadway, Suite 525, Oakland, CA 94612
Phone: (510) 835-2537 Fax: (510) 835-2339
SUBMITTED

Lockwood, Andrews & Newnam, Inc. A LEO A DALY COMPANY
T·Y·LIN INTERNATIONAL
APPROVED

VTA BART SILICON VALLEY
BART SILICON VALLEY BERRYESSA EXTENSION

LINE, TRACK, STATIONS AND SYSTEMS
DESIGN UNIT 023
MILPITAS STATION

TRACK LEVEL PLAN
SHEET 6 OF 6

CADD FILENAME C700-S-DB-A096.dwg
SIZE D | SCALE 1/8"=1'-0"
CONTRACT NO. C700 | REV. 0
AREA CODE DB | SHEET NO. A096 | PAGE NO. 0332

Jun 26, 2013 – 1:21pm G:\Current Projects\VTA-Berryessa Extension Project\Station – Milpitas\CAD\Drawings Out\13-0710 C700 Milpitas Station – RFC Submittl\C700-S-DB-A096.dwg JosephG

Not For Construction

Santa Clara Valley Transportation Authority

____NO EXCEPTIONS TAKEN (NET)
____MAKE CORRECTIONS NOTED (MCN)
____AMEND AND RESUBMIT (A/R)

Any action shown above is subject to the terms of the contract and does not relieve the Contractor of any of its obligations under the contract, including design and detailing.

Contract No.: DB11002F

By: _____ Date: _____

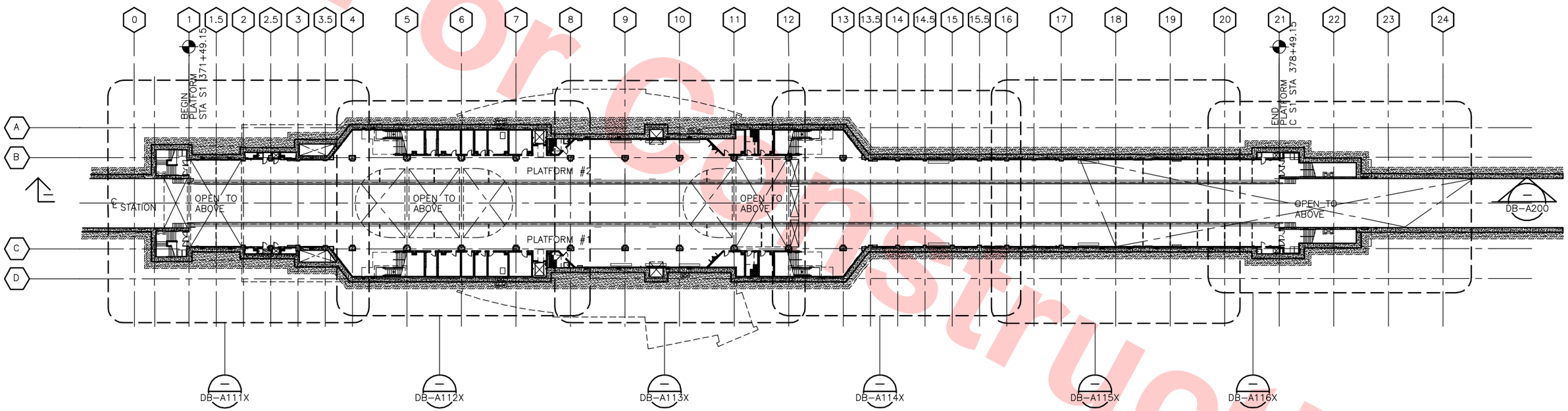

KEY PLAN – PLATFORM LEVEL

SCALE: 1/32"=1'-0"

NOTE:

FOR RETAINING WALL DRAIN LINE LOCATION, SEE DWG NOS. DB-A117 DB-A118 & DB-A119

32' 0' 32' 64'

GRAPHIC SCALE

REV	DATE	BY	SUB	APP	DESCRIPTION
0	20130710				READINESS FOR CONSTRUCTION
					REPLACES C700-S-DB-A100, REV. P

DESIGNED BY S. DEBNATH
DRAWN BY R. COLLADO
CHECKED BY E. BALLADA
IN CHARGE R. BARLAAN
DATE 20130710

LICENSED ARCHITECT SOMESH DEBNATH No. C21523 STATE OF CALIFORNIA

Skanska Shimmick Herzog
1436 California Circle
Milpitas, California 95035
A Joint Venture

Anil Verma Associates, Inc.
1970 Broadway, Suite 535 Oakland, CA 94612
Phone: (510) 835-2537 Fax: (510) 835-2339

Lockwood, Andrews & Newnam, Inc. A CH2M HILL COMPANY
T·Y·LIN INTERNATIONAL

SUBMITTED _____
APPROVED _____

VTA BART SILICON VALLEY
BART SILICON VALLEY BERRYESSA EXTENSION

LINE, TRACK, STATIONS AND SYSTEMS
DESIGN UNIT 023
MILPITAS STATION

KEY PLAN
PLATFORM LEVEL

CADD FILENAME C700-S-DB-A110X.dwg
SIZE D | SCALE 1/32"=1'-0"
CONTRACT NO. C700 | REV. 0
AREA CODE DB | SHEET NO. A110X | PAGE NO. 0333

JosephG Jun 26, 2013 – 1:21pm G:\Current Projects\VTA-Berryessa Extension Project\Station – Milpitas\CAD\Drawings Out\13-0710 C700 Milpitas Station – RFC Submit\C700-S-DB-A110X.dwg

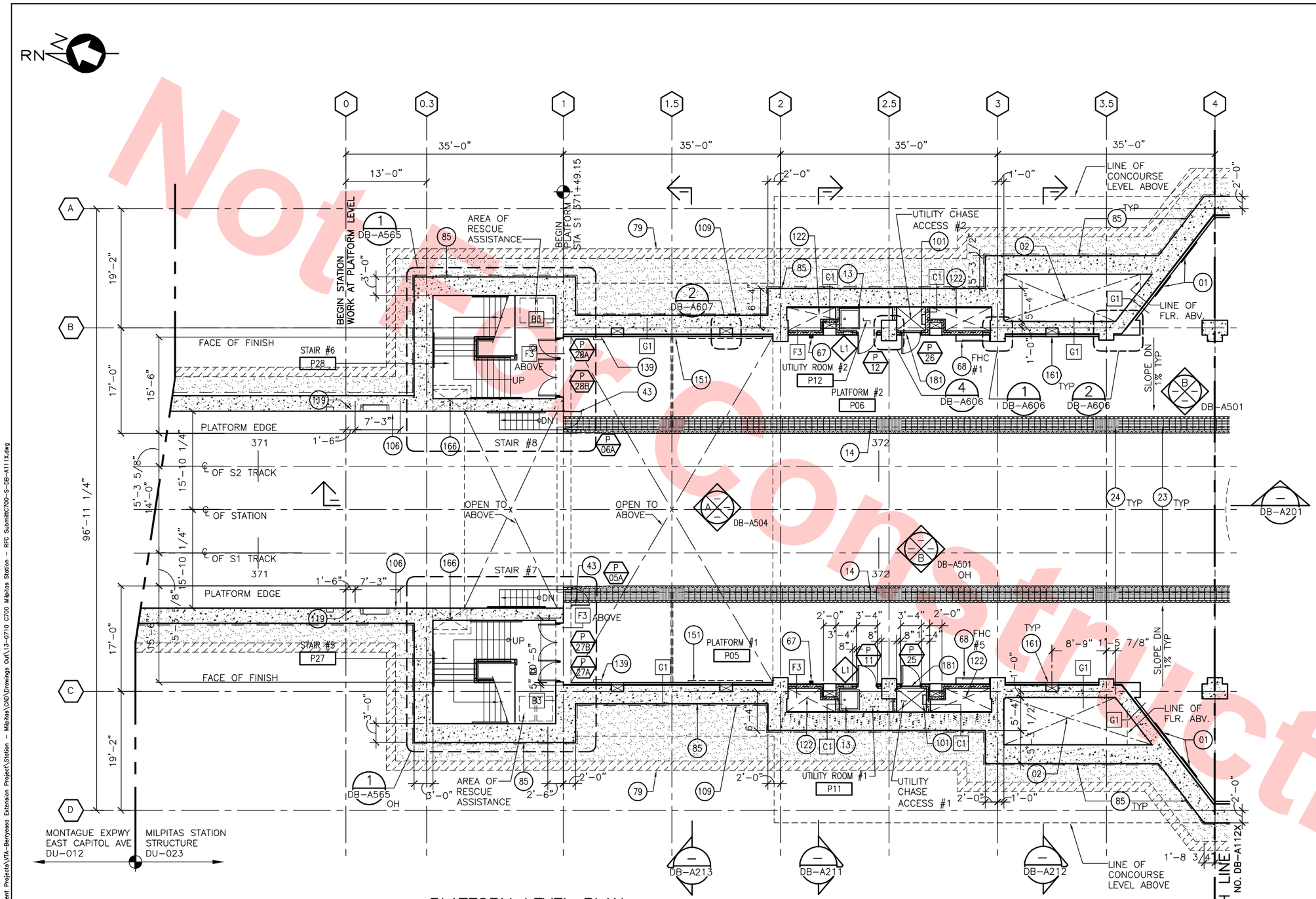

PLATFORM LEVEL PLAN

SCALE: 1/8"=1'-0"

DB-A110X

Not For Construction

KEY NOTES

- 01 MAP CASE – WALL-MOUNTED, BFS DET 4/AS83
- 02 SUPPLY AIR RISER SHAFT FROM CONCOURSE LEVEL DOWN TO UTILITY CHASE
- 13 UTILITY SINK
- 14 SLPA ABOVE
- 23 TACTILE WARNING BAND, BFS DET 5/AS42
- 24 TACTILE DOOR INDICATOR, BFS DET 4/AS42
- 43 END-OF-PLATFORM GATE, SEE BFS DET 1/AS70, SIM. TO BE UNGROUNDED
- 67 FIRE EXTINGUISHER CABINET
- 68 FIRE HOSE CABINET WITH DELUGE VALVE – SEE FIRE PROTECTION DRAWINGS AND BFS SHEETS AS65 & AS67
- 79 SHORING WALL
- 85 RETAINING WALL
- 101 FIXED LADDER
- 106 BLUE LIGHT ALCOVE
- 109 WATER PROOFING MEMBRANE
- 119 FIRE EXTINGUISHER NICHE
- 122 SHAFT
- 139 PABX AND EMERGENCY TELEPHONE LOCKED BOX, SEE COMM DRAWINGS
- 151 ADVERTISEMENT FRAME SPACE
- 161 LOW WALL VENT, FOR LOCATION SEE TRACK LEVEL PLAN
- 166 RAIL LUBRICATOR ALCOVE BELOW
- 181 SAFETY CHAIN (3 ROWS)

NOTES

1. FLOOR PLAN IS SYMMETRICAL ABOUT THE CENTER LINE OF STATION. UNLESS INDICATED OTHERWISE, ELEMENTS, DIMENSIONS AND DETAILS ON ONE SIDE OF THE CENTERLINE ARE SAME AS THOSE ON THE OPPOSITE SIDE OF THE CENTERLINE.

Santa Clara Valley Transportation Authority

____NO EXCEPTIONS TAKEN (NET)
____MAKE CORRECTIONS NOTED (MCN)
____AMEND AND RESUBMIT (A/R)

Any action shown above is subject to the terms of the contract and does not relieve the Contractor of any of its obligations under the contract, including design and detailing.

Contract No.: DB11002F

By: _____ **Date:** _____

8' 0' 8' 16'

GRAPHIC SCALE

KEY PLAN

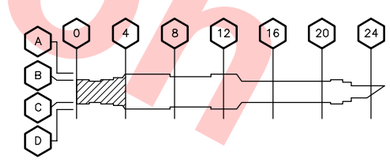

REV	DATE	BY	SUB	APP	DESCRIPTION
0	20130710				READINESS FOR CONSTRUCTION
					REPLACES C700-S-DB-A101, REV Q

DESIGNED BY S. DEBNATH
DRAWN BY R. COLLADO
CHECKED BY E. BALLADA
IN CHARGE R. BARLAAN
DATE 20130710

LICENSED ARCHITECT SOMESH DEBNATH No. C21523 STATE OF CALIFORNIA

Skanska Shimmick Herzog
1436 California Circle
Milpitas, California 95035
A Joint Venture

Anil Verma Associates, Inc.
1970 Broadway, Suite 525, Oakland, CA 94612
Phone: (510) 835-2537 Fax: (510) 535-2339

Lockwood, Andrews & Newnam, Inc. A LAN & BAH COMPANY

T·Y·LIN INTERNATIONAL

SUBMITTED _____ APPROVED _____

VTA BART SILICON VALLEY

BART SILICON VALLEY BERRYESSA EXTENSION

LINE, TRACK, STATIONS AND SYSTEMS
DESIGN UNIT 023
MILPITAS STATION

PLATFORM LEVEL PLAN
SHEET 1 OF 6

CADD FILENAME C700-S-DB-A111X.dwg
SIZE D | SCALE 1/8"=1'-0"
CONTRACT NO. C700 | REV. 0
AREA CODE DB | SHEET NO. A111X | PAGE NO. 0334

JosephG Jun 26, 2013 – 4:03pm G:\Current Projects\VTA-Berryessa Extension Project\Station – Milpitas\CAD\Drawings Out\13-0710 C700 Milpitas Station – RFC Submitt\C700-S-DB-A111X.dwg

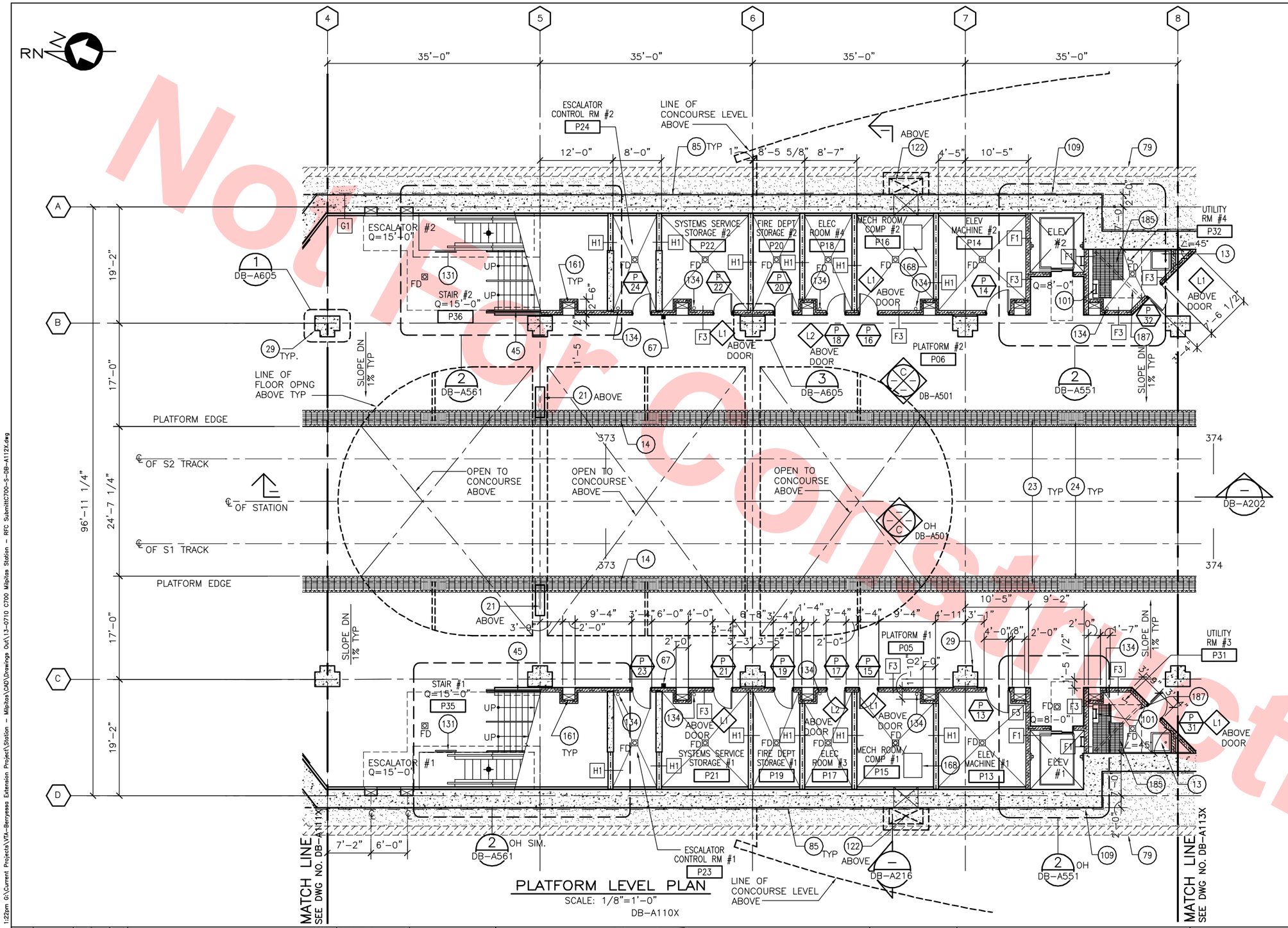

PLATFORM LEVEL PLAN
SCALE: 1/8"=1'-0"
DB-A110X

KEY NOTES

- (13) UTILITY SINK
- (14) SLPA ABOVE
- (21) DESTINATION SIGN UNIT, SEE SYSTEMS DWGS
- (23) TACTILE WARNING BAND, BFS DET 5/AS42
- (24) TACTILE DOOR INDICATOR, BFS DET 4/AS42
- (29) CONCRETE COLUMN
- (45) GUARDRAIL ASSEMBLY – GLASS
- (67) FIRE EXTINGUISHER CABINET
- (79) SHORING WALL
- (85) RETAINING WALL
- (101) FIXED LADDER
- (109) WATER PROOFING MEMBRANE
- (122) SHAFT
- (131) GLASS BARRIER
- (134) FIRE EXTINGUISHER
- (161) LOW WALL VENT, FOR LOCATION SEE TRACK LEVEL PLAN
- (168) FARE GATE COMPRESSOR
- (185) REMOVABLE FLOOR GRATING
- (187) PUMP EXTRACTION EQUIPMENT HOIST ABOVE

NOTES

1. FLOOR PLAN IS SYMMETRICAL ABOUT THE CENTER LINE OF STATION. UNLESS INDICATED OTHERWISE, ELEMENTS, DIMENSIONS AND DETAILS ON ONE SIDE OF THE CENTERLINE ARE SAME AS THOSE ON THE OPPOSITE SIDE OF THE CENTERLINE.

Santa Clara Valley Transportation Authority

____NO EXCEPTIONS TAKEN (NET)
____MAKE CORRECTIONS NOTED (MCN)
____AMEND AND RESUBMIT (A/R)

Any action shown above is subject to the terms of the contract and does not relieve the Contractor of any of its obligations under the contract, including design and detailing.

Contract No.: DB11002F

By: _____ Date: _____

8' 0' 8' 16'
GRAPHIC SCALE

KEY PLAN

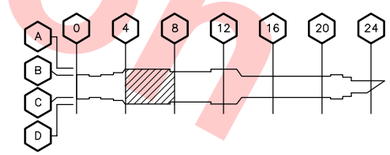

Not For Construction

REV	DATE	BY	SUB	APP	DESCRIPTION
0	20130710				READINESS FOR CONSTRUCTION
					REPLACES C700-S-DB-A102, REV. Q

DESIGNED BY S. DEBNATH
DRAWN BY R. COLLADO
CHECKED BY E. BALLADA
IN CHARGE R. BARLAAN
DATE 20130710

LICENSED ARCHITECT SOMESH DEBNATH No. C21523 STATE OF CALIFORNIA

Skanska Shimmick Herzog
1436 California Circle
Milpitas, California 95035
A Joint Venture

Anil Verma Associates, Inc.
1970 Broadway, Suite 525 Oakland, CA 94612
Phone: (510) 835-2537 Fax: (510) 535-2339
SUBMITTED

Lockwood, Andrews & Newnam, Inc. A LAN & BALY COMPANY
T·Y·LIN INTERNATIONAL
APPROVED

VTA BART SILICON VALLEY
BART SILICON VALLEY BERRYESSA EXTENSION

LINE, TRACK, STATIONS AND SYSTEMS DESIGN UNIT 023
MILPITAS STATION

PLATFORM LEVEL PLAN
SHEET 2 OF 6

CADD FILENAME C700-S-DB-A112X.dwg
SIZE D | SCALE 1/8"=1'-0"
CONTRACT NO. C700 | REV. 0
AREA CODE DB | SHEET NO. A112X | PAGE NO. 0335

JosephG Jun 26, 2013 – 1:22pm G:\Current Projects\VTA-Berryessa Extension Project\Station – Milpitas\CAD\Drawings Out\13-0710 C700 Milpitas Station – RFC Submit\C700-S-DB-A112X.dwg

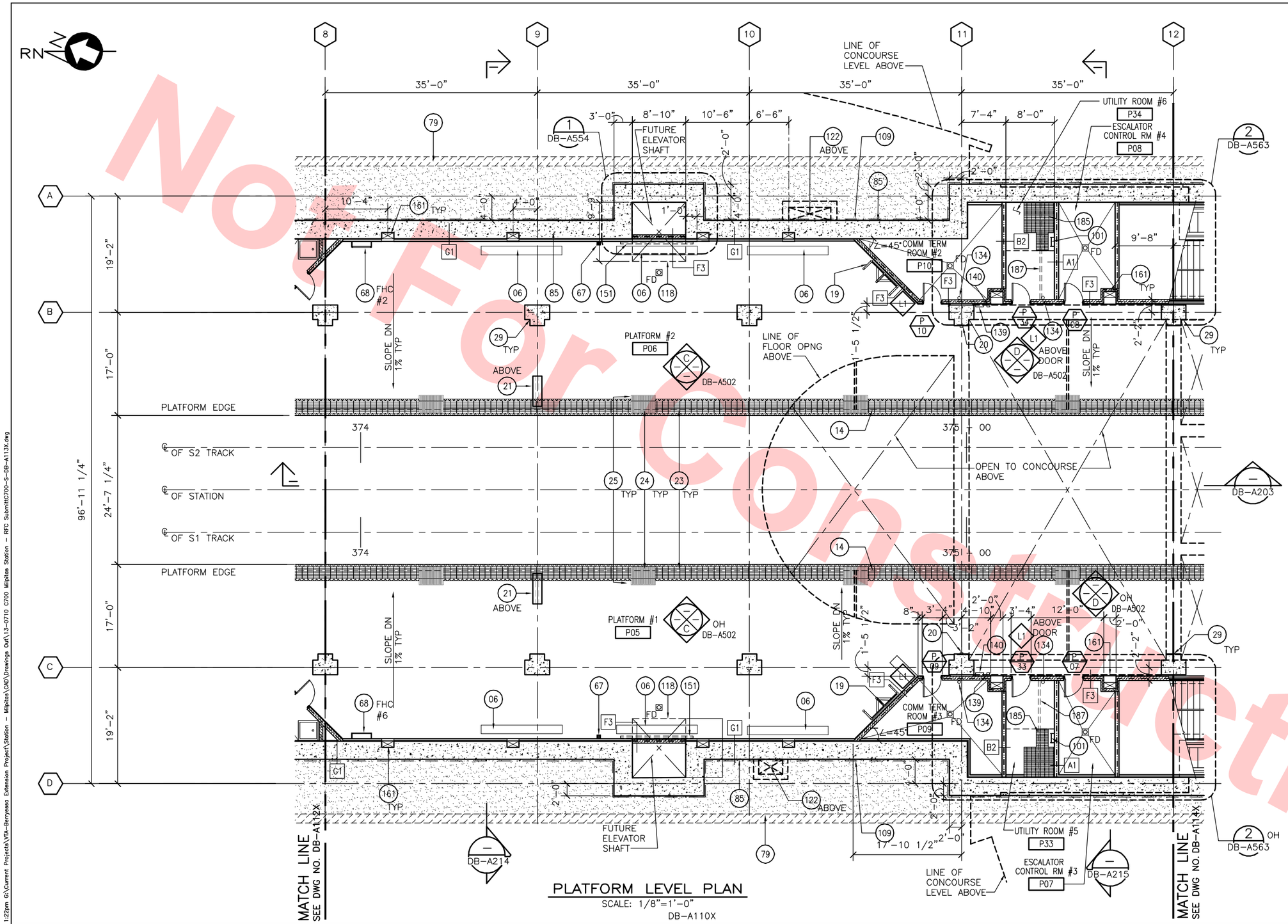

PLATFORM LEVEL PLAN

SCALE: 1/8"=1'-0"

DB-A110X

KEY NOTES

- 06 BENCH, SEE DETAIL 6/DB-A605
- 14 SLPA ABOVE
- 19 PUBLIC PAY PHONE(S)
- 20 PLATFORM TRIP STATION, SEE SYSTEMS DWGS
- 21 DESTINATION SIGN UNIT, SEE SYSTEMS DWGS
- 23 TACTILE WARNING BAND, BFS DET 5/AS42
- 24 TACTILE DOOR INDICATOR, BFS DET 4/AS42
- 25 TACTILE (HAZARD WARNING) TILE BFS DET 4/AS42
- 29 CONCRETE COLUMN
- 67 FIRE EXTINGUISHER CABINET
- 68 FIRE HOSE CABINET – SEE FIRE PROTECTION DRAWINGS AND BFS SHEETS AS65–AS67
- 79 SHORING WALL, TYP
- 85 RETAINING WALL
- 101 FIXED LADDER
- 109 WATER PROOFING MEMBRANE
- 118 KNOCK–OUT CONCRETE SLAB – SEE STRUCTURAL DWG NO. DB–S113
- 122 SHAFT
- 134 FIRE EXTINGUISHER
- 139 PABX AND EMERGENCY TELEPHONE LOCKED BOX, SEE COMM DRAWINGS
- 140 FIRE TELEPHONE LOCKED BOX, SEE COMM DRAWINGS
- 151 ADVERTISEMENT FRAME SPACE
- 161 LOW WALL VENT, FOR LOCATION SEE TRACK LEVEL PLAN
- 185 REMOVABLE FLOOR GRATING
- 187 PUMP EXTRACTION EQUIPMENT HOIST ABOVE

NOTES

1. FLOOR PLAN IS SYMMETRICAL ABOUT THE CENTER LINE OF STATION. UNLESS INDICATED OTHERWISE, ELEMENTS, DIMENSIONS AND DETAILS ON ONE SIDE OF THE CENTERLINE ARE SAME AS THOSE ON THE OPPOSITE SIDE OF THE CENTERLINE.

Santa Clara Valley Transportation Authority

____NO EXCEPTIONS TAKEN (NET)
____MAKE CORRECTIONS NOTED (MCN)
____AMEND AND RESUBMIT (A/R)

Any action shown above is subject to the terms of the contract and does not relieve the Contractor of any of its obligations under the contract, including design and detailing.

Contract No.: DB11002F

By: _____ Date: _____

8' 0' 8' 16'

GRAPHIC SCALE

KEY PLAN

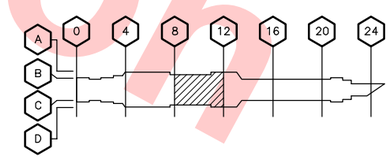

Not For Construction

REV	DATE	BY	SUB	APP	DESCRIPTION
0	20130710				READINESS FOR CONSTRUCTION
					REPLACES C700–S–DB–A103, REV. P

DESIGNED BY S. DEBNATH
DRAWN BY R. COLLADO
CHECKED BY E. BALLADA
IN CHARGE R. BARLAAN
DATE 20130710

LICENSED ARCHITECT SOMESH DEBNATH No. C21523 STATE OF CALIFORNIA

Skanska Shimmick Herzog
1436 California Circle
Milpitas, California 95035
A Joint Venture

Anil Verma Associates, Inc.
1970 Broadway, Suite 535 Oakland, CA 94612
Phone: (510) 835-2537 Fax: (510) 835-2339
SUBMITTED

Lockwood, Andrews & Newnam, Inc. A CH2M HILL COMPANY
T·Y·LIN INTERNATIONAL
APPROVED

VTA BART SILICON VALLEY
BART SILICON VALLEY BERRYESSA EXTENSION

LINE, TRACK, STATIONS AND SYSTEMS
DESIGN UNIT 023
MILPITAS STATION

PLATFORM LEVEL PLAN
SHEET 3 OF 6

CADD FILENAME C700–S–DB–A113X.dwg
SIZE D | SCALE 1/8"=1'-0"
CONTRACT NO. C700 | REV. 0
AREA CODE DB | SHEET NO. A113X | PAGE NO. 0336

JosephG Jun 26, 2013 – 1:22pm G:\Current Projects\VTA–Berryessa Extension Project\Station – Milpitas\CAD\Drawings Out\13–0710 C700 Milpitas Station – RFC Submittal\C700–S–DB–A113X.dwg

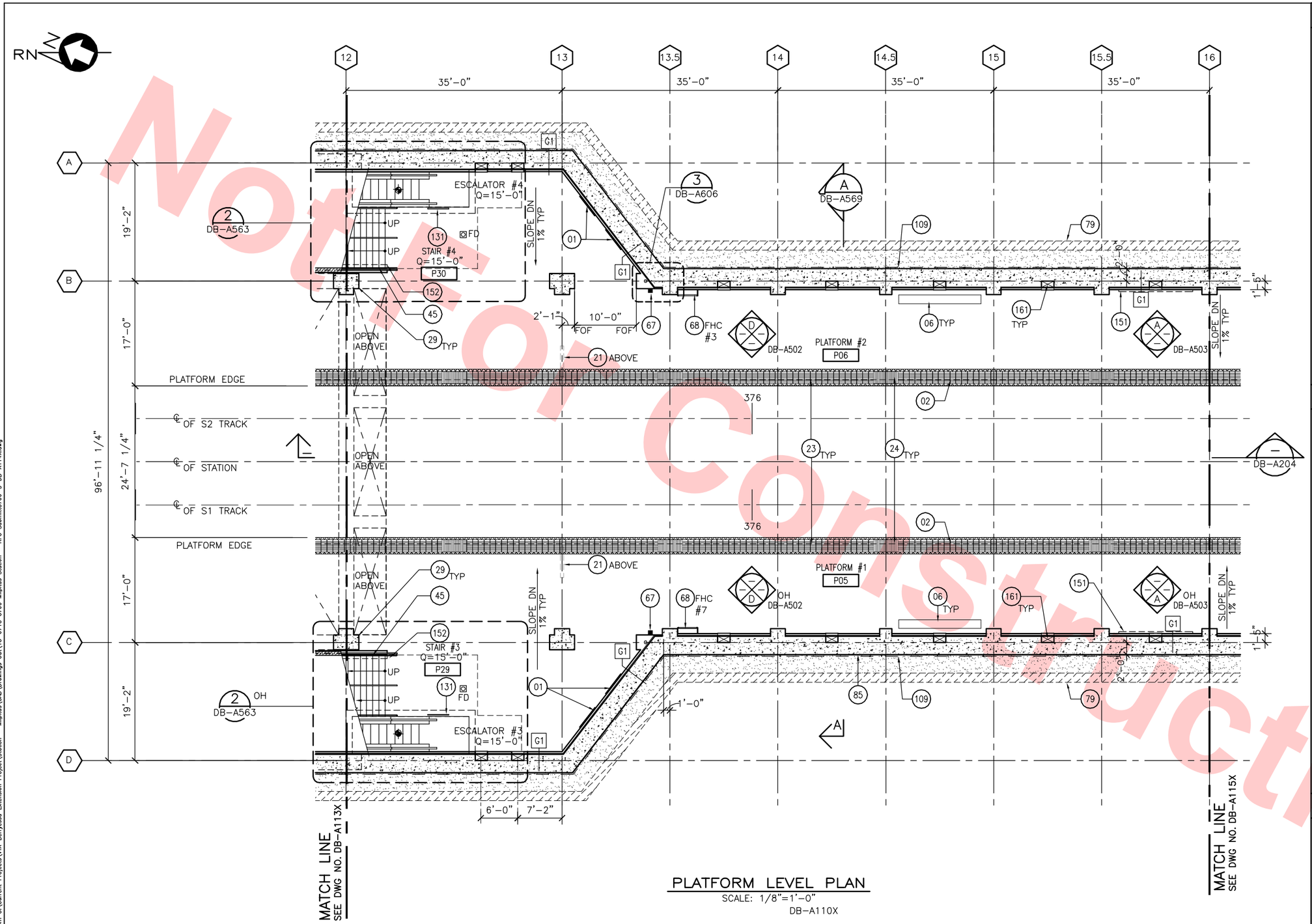

PLATFORM LEVEL PLAN

SCALE: 1/8"=1'-0"

DB-A110X

KEY NOTES

01	MAP CASE
02	SLPA ABOVE
06	BENCH, SEE DETAIL 6/DB-A605
21	DESTINATION SIGN UNIT, SEE SYSTEMS DWGS
23	TACTILE WARNING BAND, BFS DET 5/AS42
24	TACTILE DOOR INDICATOR, BFS DET 4/AS42
29	CONCRETE COLUMN
45	GUARDRAIL ASSEMBLY – GLASS
67	FIRE EXTINGUISHER CABINET
68	FIRE HOSE CABINET – SEE FIRE PROTECTION DRAWINGS AND BFS SHEETS AS65–AS67
79	SHORING WALL
85	RETAINING WALL
109	WATER PROOFING MEMBRANE
131	GLASS BARRIER
151	ADVERTISEMENT FRAME SPACE
152	BICYCLE CHANNEL @ STAIRS #3 & #4 PER BFS
161	LOW WALL VENT, FOR LOCATION SEE TRACK LEVEL PLAN

NOTES

1. FLOOR PLAN IS SYMMETRICAL ABOUT THE CENTER LINE OF STATION. UNLESS INDICATED OTHERWISE, ELEMENTS, DIMENSIONS AND DETAILS ON ONE SIDE OF THE CENTERLINE ARE SAME AS THOSE ON THE OPPOSITE SIDE OF THE CENTERLINE.

Santa Clara Valley Transportation Authority

____NO EXCEPTIONS TAKEN (NET)
____MAKE CORRECTIONS NOTED (MCN)
____AMEND AND RESUBMIT (A/R)

Any action shown above is subject to the terms of the contract and does not relieve the Contractor of any of its obligations under the contract, including design and detailing.

Contract No.: DB11002F

By: _____ **Date:** _____

8' 0' 8' 16'

GRAPHIC SCALE

KEY PLAN

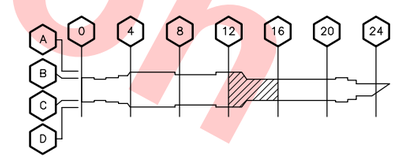

Not for Construction

REV	DATE	BY	SUB	APP	DESCRIPTION
0	20130710				READINESS FOR CONSTRUCTION
					REPLACES C700-S-DB-A104, REV. Q

DESIGNED BY S. DEBNATH
DRAWN BY R. COLLADO
CHECKED BY E. BALLADA
IN CHARGE R. BARLAAN
DATE 20130710

LICENSED ARCHITECT SOMESH DEBNATH No. C21523 STATE OF CALIFORNIA

Skanska Shimmick Herzog
1436 California Circle
Milpitas, California 95035
A Joint Venture

Anil Verma Associates, Inc.
1970 Broadway, Suite 535
Oakland, CA 94612
Phone: (510) 835-2537 Fax: (510) 535-2339
SUBMITTED

Lockwood, Andrews & Newnam, Inc. A CH2M HILL COMPANY
T·Y·LIN INTERNATIONAL
APPROVED

VTA BART SILICON VALLEY
BART SILICON VALLEY BERRYESSA EXTENSION

LINE, TRACK, STATIONS AND SYSTEMS DESIGN UNIT 023
MILPITAS STATION

PLATFORM LEVEL PLAN
SHEET 4 OF 6

CADD FILENAME C700-S-DB-A114X.dwg
SIZE D | SCALE 1/8"=1'-0"
CONTRACT NO. C700 | REV. 0
AREA CODE DB | SHEET NO. A114X | PAGE NO. 0337

JosephG Jun 26, 2013 – 1:23pm G:\Current Projects\VTA-Berryessa Extension Project\Station – Milpitas\CAD\Drawings Out\13-0710 C700 Milpitas Station – RFC Submit\C700-S-DB-A114X.dwg

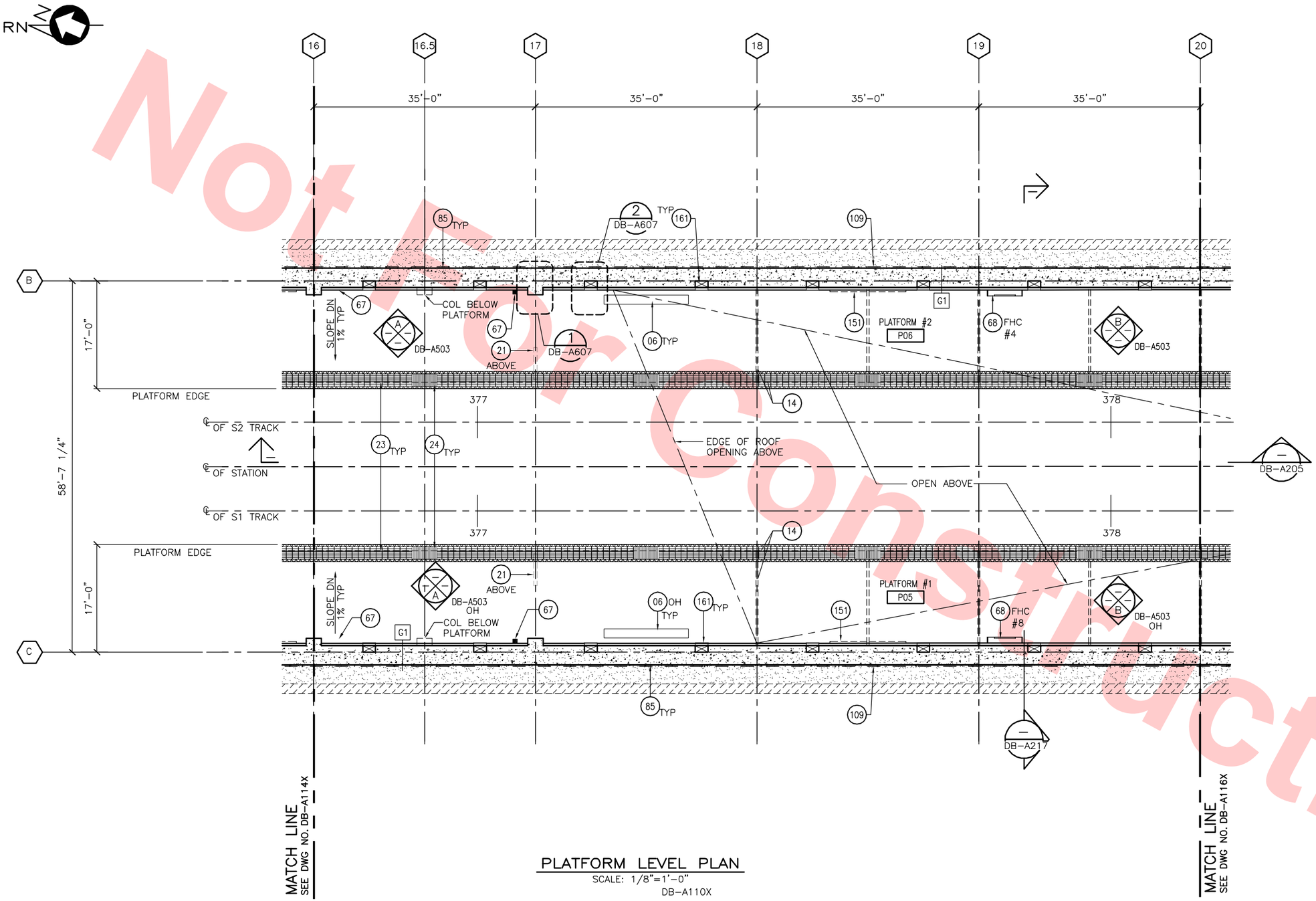

PLATFORM LEVEL PLAN

SCALE: 1/8"=1'-0"

DB-A110X

KEY NOTES

- 06 BENCH, SEE DETAIL 6/DB-A605
- 14 SLPA AND SUPPORT ABOVE
- 21 DESTINATION SIGN UNIT, SEE SYSTEMS DWGS
- 23 TACTILE WARNING BAND, BFS DET 5/AS42
- 24 TACTILE DOOR INDICATOR, BFS DET 4/AS42
- 67 FIRE EXTINGUISHER CABINET
- 68 FIRE HOSE CABINET WITH DELUGE VALVE– SEE FIRE PROTECTION DRAWINGS AND BFS SHEETS AS65–AS67
- 85 RETAINING WALL
- 109 WATER PROOFING MEMBRANE
- 151 ADVERTISEMENT FRAME SPACE
- 161 LOW WALL VENT, FOR LOCATION SEE TRACK LEVEL PLAN

NOTES

1. FLOOR PLAN IS SYMMETRICAL ABOUT THE CENTER LINE OF STATION. UNLESS INDICATED OTHERWISE, ELEMENTS, DIMENSIONS AND DETAILS ON ONE SIDE OF THE CENTERLINE ARE SAME AS THOSE ON THE OPPOSITE SIDE OF THE CENTERLINE.

Santa Clara Valley Transportation Authority

____NO EXCEPTIONS TAKEN (NET)
____MAKE CORRECTIONS NOTED (MCN)
____AMEND AND RESUBMIT (A/R)

Any action shown above is subject to the terms of the contract and does not relieve the Contractor of any of its obligations under the contract, including design and detailing.

Contract No.: DB11002F

By: _____ **Date:** _____

8' 0' 8' 16'

GRAPHIC SCALE

KEY PLAN

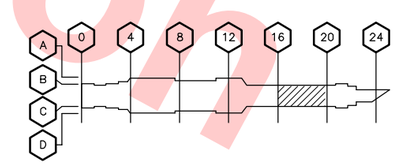

Not for Construction

REV	DATE	BY	SUB	APP	DESCRIPTION
0	20130710				READINESS FOR CONSTRUCTION
					REPLACES C700–S–DB–A105, REV. P

DESIGNED BY S. DEBNATH
DRAWN BY R. COLLADO
CHECKED BY E. BALLADA
IN CHARGE R. BARLAAN
DATE 20130710

LICENSED ARCHITECT SOMESH DEBNATH No. C21523 STATE OF CALIFORNIA

Skanska Shimmick Herzog
1436 California Circle
Milpitas, California 95035
A Joint Venture

Anil Verma Associates, Inc.
1970 Broadway, Suite 535, Oakland, CA 94612
Phone: (510) 835-2537 Fax: (510) 835-2339

SUBMITTED _____

Lockwood, Andrews & Newnam, Inc. A LEA & BALY COMPANY
T·Y·LIN INTERNATIONAL

APPROVED _____

VTA BART SILICON VALLEY

BART SILICON VALLEY BERRYESSA EXTENSION

LINE, TRACK, STATIONS AND SYSTEMS
DESIGN UNIT 023
MILPITAS STATION

PLATFORM LEVEL PLAN
SHEET 5 OF 6

CADD FILENAME C700–S–DB–A115X.dwg
SIZE D | SCALE 1/8"=1'-0"
CONTRACT NO. C700 | REV. 0
AREA CODE DB | SHEET NO. A115X | PAGE NO. 0338

JosephG Jun 26, 2013 – 1:23pm G:\Current Projects\VTA–Berryessa Extension Project\Station – Milpitas\CAD\Drawings Out\13–0710 C700 Milpitas Station – RFC Submit\C700–S–DB–A115X.dwg

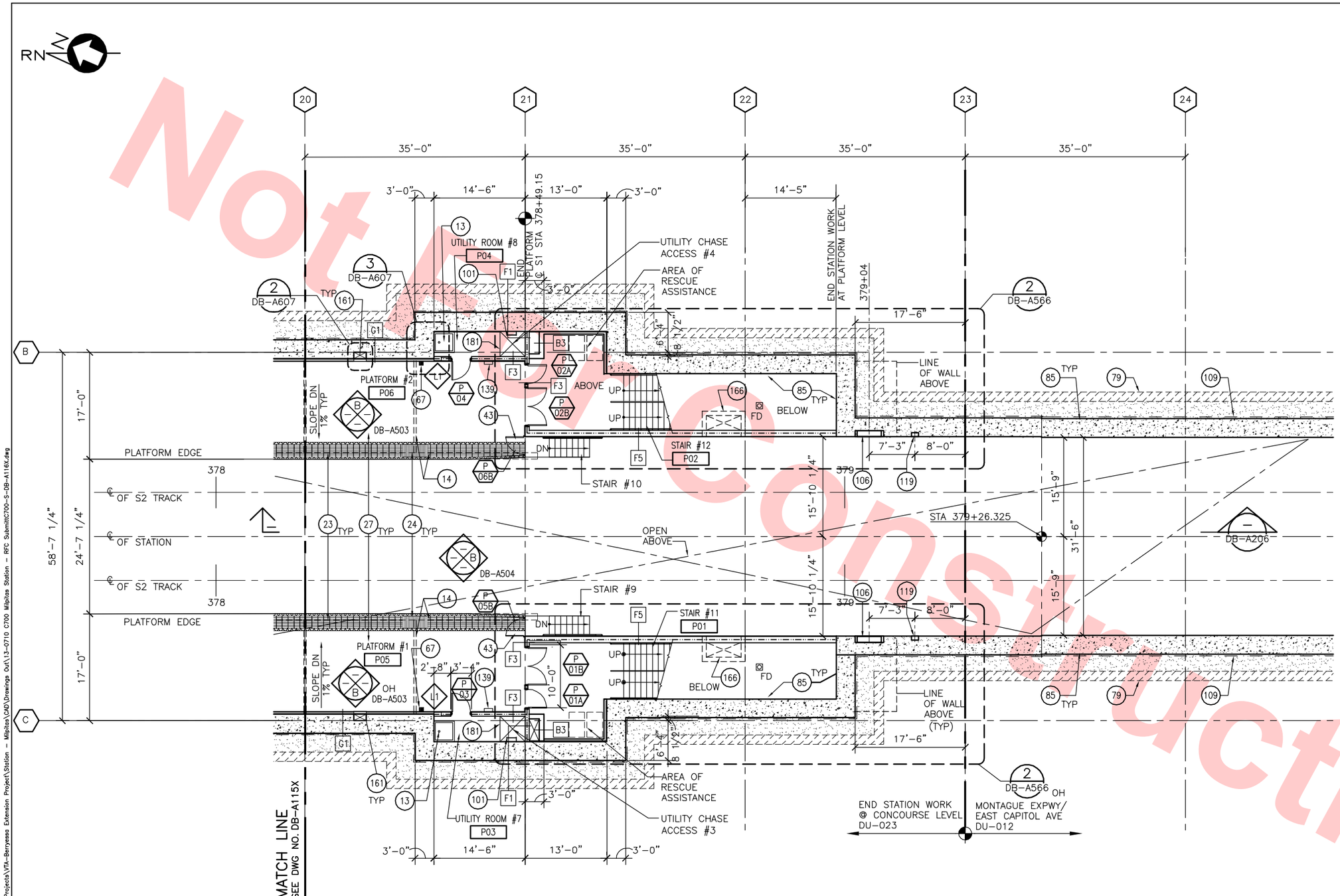

PLATFORM LEVEL PLAN

SCALE: 1/8"=1'-0"

DB-A110X

KEY NOTES

- (13) UTILITY SINK
- (14) SLPA AND SUPPORT ABOVE
- (23) TACTILE WARNING BAND, BFS DET 5/AS42
- (24) TACTILE DOOR INDICATOR, BFS DET 4/AS42
- (27) FINISH FLOORING – SEE FLOOR PATTERN DRAWINGS
- (43) END–OF–PLATFORM GATE, SEE BFS DET 1/AS70, SIM. TO BE UNGROUNDED
- (67) FIRE EXTINGUISHER CABINET
- (79) SHORING WALL
- (85) RETAINING WALL
- (101) FIXED LADDER
- (106) BLUE LIGHT ALCOVE
- (109) WATER PROOFING MEMBRANE
- (119) FIRE EXTINGUISHER NICHE
- (139) PABX AND EMERGENCY TELEPHONE LOCKED BOX, SEE COMM DRAWINGS
- (161) LOW WALL VENT, FOR LOCATION SEE TRACK LEVEL PLAN
- (166) RAIL LUBRICATOR ALCOVE
- (181) SAFETY CHAIN (3 ROWS)

NOTES

1. FLOOR PLAN IS SYMMETRICAL ABOUT THE CENTER LINE OF STATION. UNLESS INDICATED OTHERWISE, ELEMENTS, DIMENSIONS AND DETAILS ON ONE SIDE OF THE CENTERLINE ARE SAME AS THOSE ON THE OPPOSITE SIDE OF THE CENTERLINE.

Santa Clara Valley Transportation Authority

____NO EXCEPTIONS TAKEN (NET)
____MAKE CORRECTIONS NOTED (MCN)
____AMEND AND RESUBMIT (A/R)

Any action shown above is subject to the terms of the contract and does not relieve the Contractor of any of its obligations under the contract, including design and detailing.

Contract No.: DB11002F

By: _____ **Date:** _____

8' 0' 8' 16'

GRAPHIC SCALE

KEY PLAN

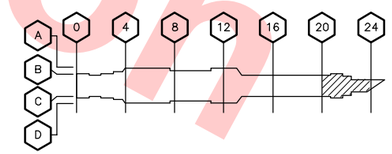

Not for Construction

REV	DATE	BY	SUB	APP	DESCRIPTION
0	20130710				READINESS FOR CONSTRUCTION
					REPLACES C700–S–DB–A106, REV. P

DESIGNED BY S. DEBNATH
DRAWN BY R. COLLADO
CHECKED BY E. BALLADA
IN CHARGE R. BARLAAN
DATE 20130710

LICENSED ARCHITECT SOMESH DEBNATH No. C21523 STATE OF CALIFORNIA

Skanska Shimmick Herzog
1436 California Circle Milpitas, California 95035
A Joint Venture

Anil Verma Associates, Inc. 1970 Broadway, Suite 525 Oakland, CA 94612 Phone: (510) 835-2537 Fax: (510) 835-2339
SUBMITTED

Lockwood, Andrews & Newnam, Inc. A LAN & BAIN COMPANY
T·Y·LIN INTERNATIONAL
APPROVED

VTA BART SILICON VALLEY
BART SILICON VALLEY BERRYESSA EXTENSION

LINE, TRACK, STATIONS AND SYSTEMS
DESIGN UNIT 023
MILPITAS STATION

PLATFORM LEVEL PLAN
SHEET 6 OF 6

CADD FILENAME C700–S–DB–A116X.dwg
SIZE D | SCALE 1/8"=1'-0"
CONTRACT NO. C700 | REV. 0
AREA CODE DB | SHEET NO. A116X | PAGE NO. 0339

Jun 26, 2013 – 12:45pm G:\Current Projects\VTA–Berryessa Extension Project\Station – Milpitas\CAD\Drawings Out\13–0710 C700 Milpitas Station – RFC Submit\C700–S–DB–A116X.dwg
JosephG

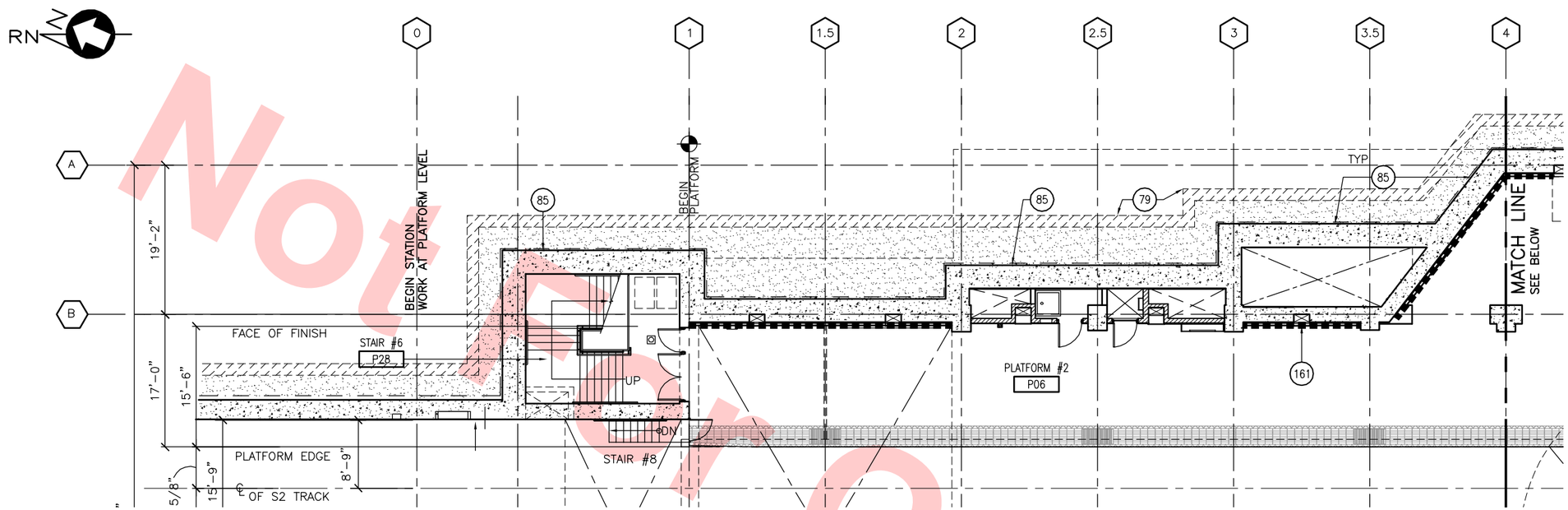

RETAINING WALL DRAIN LINE PLAN @ GRID LINE 0 – 4 PLATFORM #2

SCALE: 1/8"=1'-0"

DB-A110X

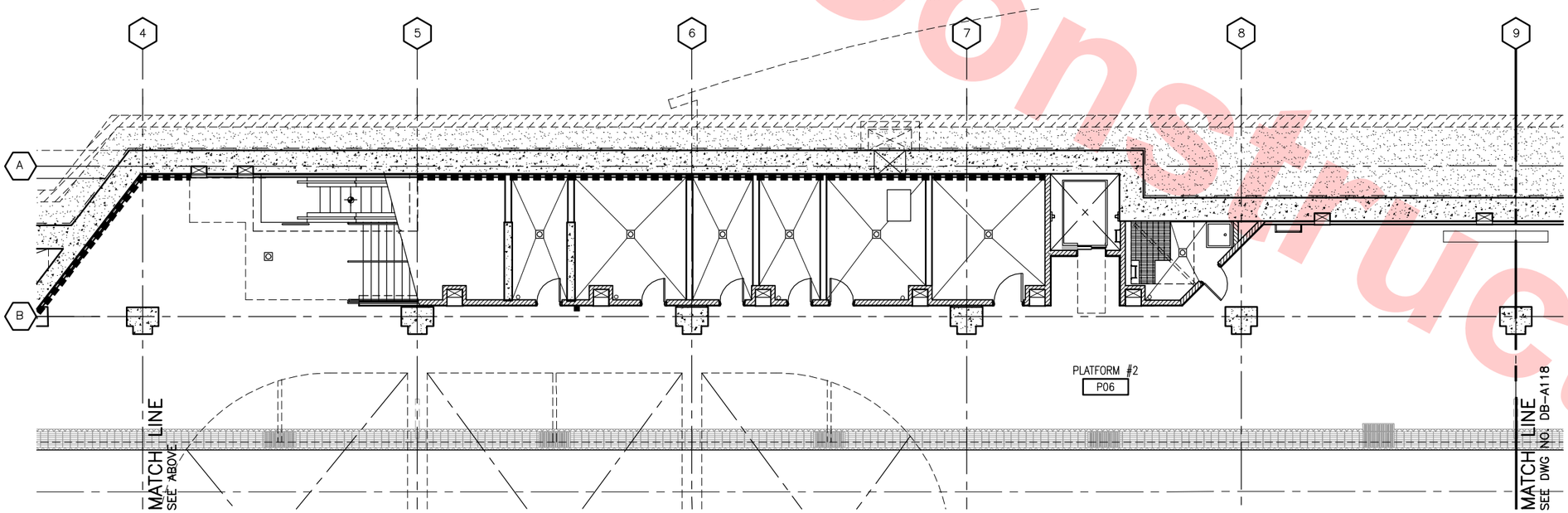

RETAINING WALL DRAIN LINE PLAN @ GRID LINE 4 – 9 PLATFORM #2

SCALE: 1/8"=1'-0"

DB-A110X

KEY NOTES

- (79) SHORING WALL
- (85) RETAINING WALL
- (161) LOW WALL VENT

LEGEND

- DRAIN LINE

NOTES

1. FLOOR PLAN IS SYMMETRICAL ABOUT THE CENTER LINE OF STATION. UNLESS INDICATED OTHERWISE, ELEMENTS, DIMENSIONS AND DETAILS ON ONE SIDE OF THE CENTERLINE ARE SAME AS THOSE ON THE OPPOSITE SIDE OF THE CENTERLINE.

Santa Clara Valley Transportation Authority

____NO EXCEPTIONS TAKEN (NET)
____MAKE CORRECTIONS NOTED (MCN)
____AMEND AND RESUBMIT (A/R)

Any action shown above is subject to the terms of the contract and does not relieve the Contractor of any of its obligations under the contract, including design and detailing.

Contract No.: DB11002F

By: _____ Date: _____

8' 0' 8' 16'

GRAPHIC SCALE

KEY PLAN

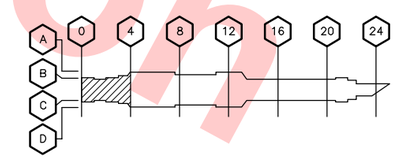

Not For Construction

REV	DATE	BY	SUB	APP	DESCRIPTION
0	20130710				READINESS FOR CONSTRUCTION
					REPLACES C700-S-DB-A101, REV Q

DESIGNED BY S. DEBNATH
DRAWN BY R. COLLADO
CHECKED BY E. BALLADA
IN CHARGE R. BARLAAN
DATE 20130710

LICENSED ARCHITECT SOMESH DEBNATH No. C21523 STATE OF CALIFORNIA

Skanska Shimmick Herzog
1436 California Circle
Milpitas, California 95035
A Joint Venture

Anil Verma Associates, Inc.
1970 Broadway, Suite 535
Oakland, CA 94612
Phone: (510) 835-2537 Fax: (510) 535-2339

Lockwood, Andrews & Newnam, Inc. A CH2M HILL COMPANY

T·Y·LIN INTERNATIONAL

SUBMITTED _____ APPROVED _____

VTA BART SILICON VALLEY

BART SILICON VALLEY BERRYESSA EXTENSION

LINE, TRACK, STATIONS AND SYSTEMS
DESIGN UNIT 023
MILPITAS STATION

RETAINING WALL DRAIN LINE PLAN
SHEET 1 OF 3

CADD FILENAME C700-S-DB-A117.dwg
SIZE D | SCALE 1/8"=1'-0"
CONTRACT NO. C700 | REV. 0
AREA CODE DB | SHEET NO. A117 | PAGE NO. 0340

JosephG Jun 26, 2013 – 1:24pm G:\Current Projects\VTA-Berryessa Extension Project\Station – Milpitas\CAD\Drawings Out\13-0710 C700 Milpitas Station – RFC Submit\C700-S-DB-A117.dwg

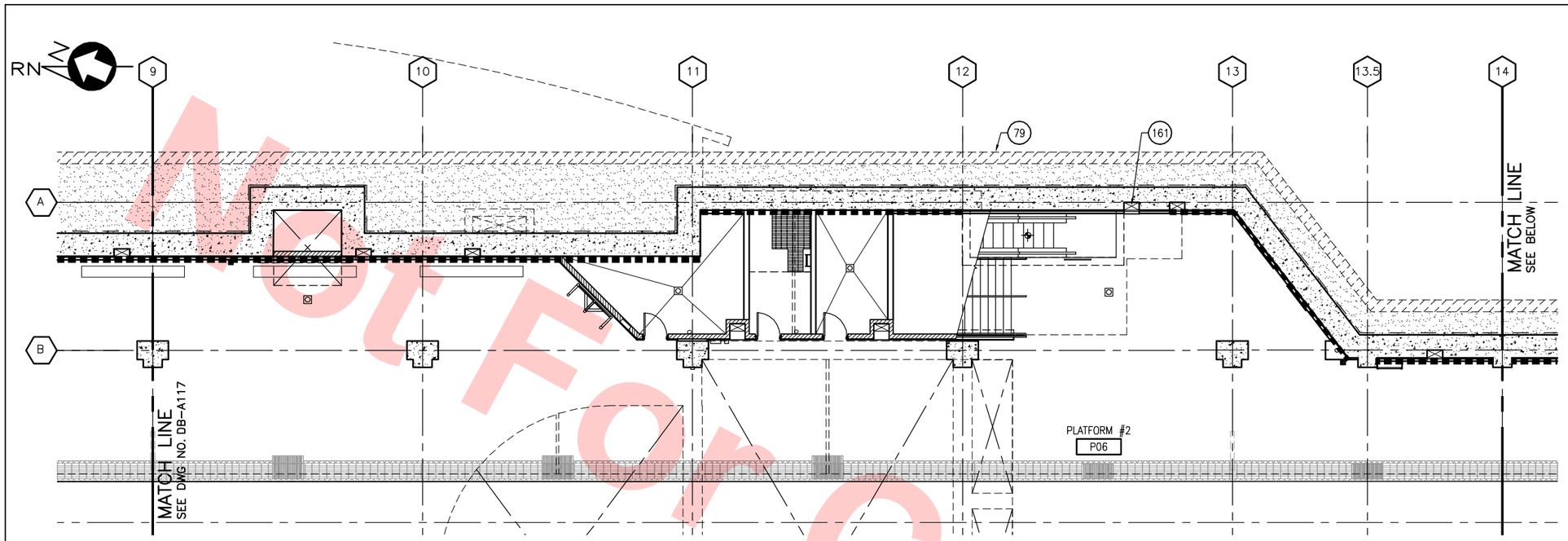

RETAINING WALL DRAIN LINE PLAN @ GRID LINE 9 – 14 PLATFORM #2

SCALE: 1/8"=1'-0"

DB-A110X

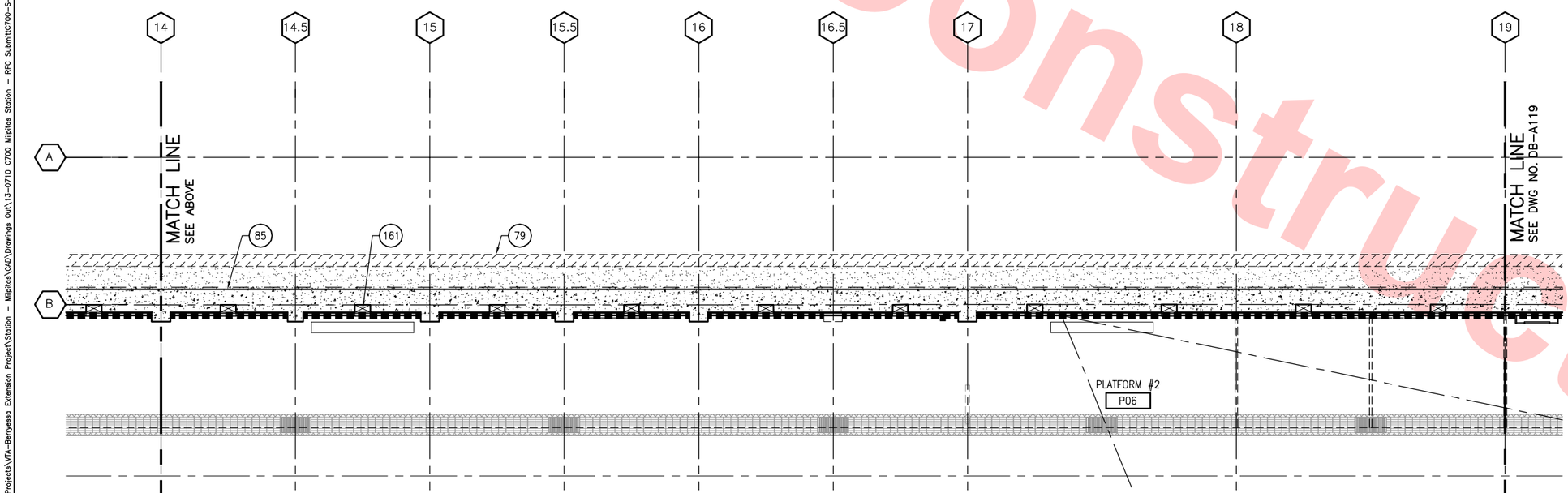

RETAINING WALL DRAIN LINE PLAN @ GRID LINE 14 – 19 PLATFORM #2

SCALE: 1/8"=1'-0"

DB-A110X

KEY NOTES

79 SHORING WALL

85 RETAINING WALL

161 LOW WALL VENT

LEGEND

DRAIN LINE

NOTES

1. FLOOR PLAN IS SYMMETRICAL ABOUT THE CENTER LINE OF STATION. UNLESS INDICATED OTHERWISE, ELEMENTS, DIMENSIONS AND DETAILS ON ONE SIDE OF THE CENTERLINE ARE SAME AS THOSE ON THE OPPOSITE SIDE OF THE CENTERLINE.

Santa Clara Valley Transportation Authority

____NO EXCEPTIONS TAKEN (NET)
____MAKE CORRECTIONS NOTED (MCN)
____AMEND AND RESUBMIT (A/R)

Any action shown above is subject to the terms of the contract and does not relieve the Contractor of any of its obligations under the contract, including design and detailing.

Contract No.: DB11002F

By: _____ Date: _____

8' 0' 8' 16'

GRAPHIC SCALE

KEY PLAN

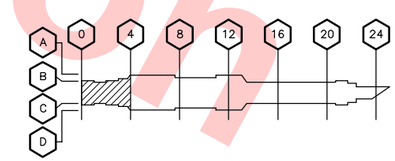

Not For Construction

REV	DATE	BY	SUB	APP	DESCRIPTION
0	20130710				READINESS FOR CONSTRUCTION
					REPLACES C700-S-DB-A101, REV Q

DESIGNED BY S. DEBNATH
DRAWN BY R. COLLADO
CHECKED BY E. BALLADA
IN CHARGE R. BARLAAN
DATE 20130710

LICENSED ARCHITECT SURESH DEBNATH No. C21523 STATE OF CALIFORNIA

Skanska Shimmick Herzog
1436 California Circle
Milpitas, California 95035
A Joint Venture

Anil Verma Associates, Inc.
1970 Broadway, Suite 525, Oakland, CA 94612
Phone: (510) 835-2537 Fax: (510) 835-2339

Lockwood, Andrews & Newnam, Inc. A LEO A DALY COMPANY

T·Y·LIN INTERNATIONAL

SUBMITTED

APPROVED

VTA BART SILICON VALLEY

BART SILICON VALLEY BERRYESSA EXTENSION

LINE, TRACK, STATIONS AND SYSTEMS
DESIGN UNIT 023
MILPITAS STATION

RETAINING WALL DRAIN LINE PLAN
SHEET 2 OF 3

CADD FILENAME C700-S-DB-A118.dwg
SIZE D | SCALE 1/8"=1'-0"
CONTRACT NO. C700 | REV. 0
AREA CODE DB | SHEET NO. A118 | PAGE NO. 0341

Jun 26, 2013 – 1:24pm G:\Current Projects\VTA-Berryessa Extension Project\Station – Milpitas\CAD\Drawings Out\13-0710 C700 Milpitas Station – RFC Submit\C700-S-DB-A118.dwg
JosephG

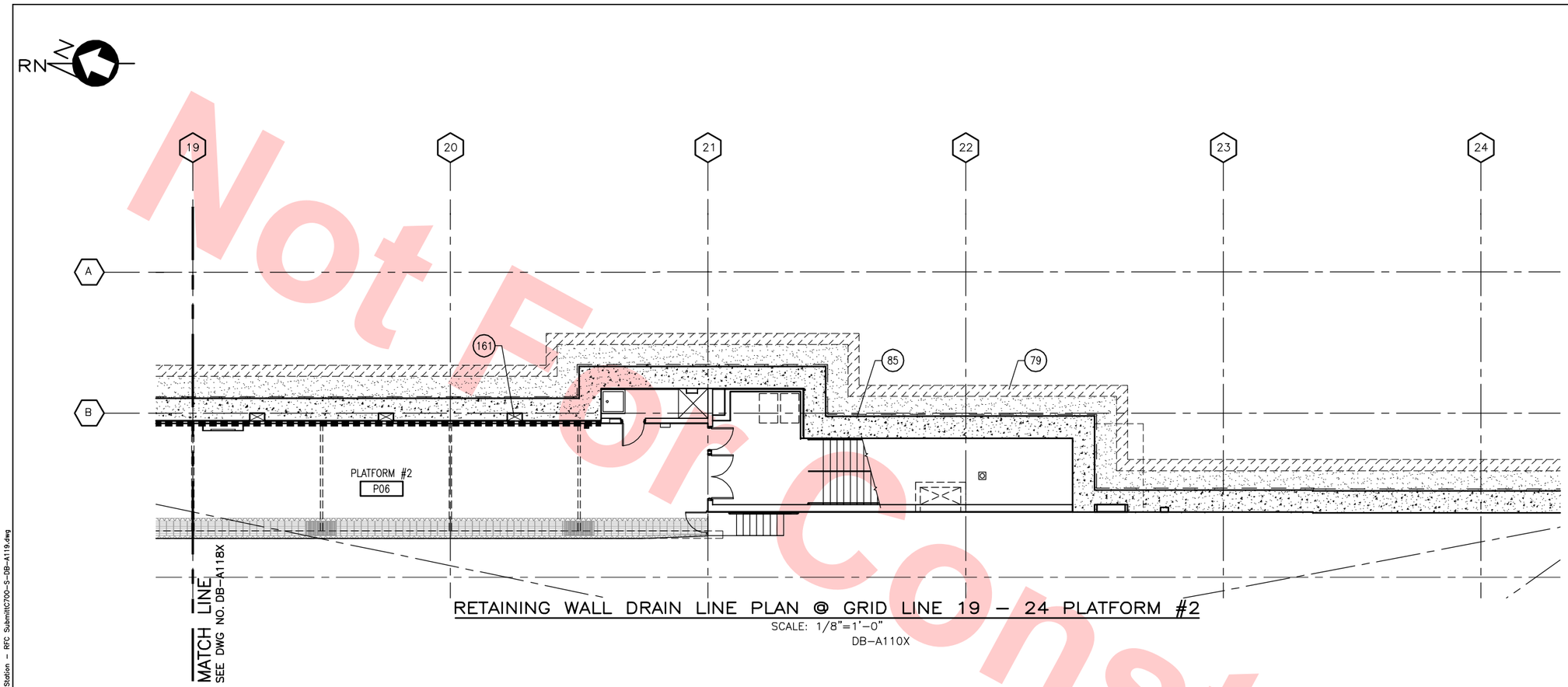

RETAINING WALL DRAIN LINE PLAN @ GRID LINE 19 – 24 PLATFORM #2

SCALE: 1/8"=1'-0"

DB-A110X

KEY NOTES

- (79) SHORING WALL
- (85) RETAINING WALL
- (161) LOW WALL VENT

LEGEND

■■■■■■ DRAIN LINE

NOTES

1. FLOOR PLAN IS SYMMETRICAL ABOUT THE CENTER LINE OF STATION. UNLESS INDICATED OTHERWISE, ELEMENTS, DIMENSIONS AND DETAILS ON ONE SIDE OF THE CENTERLINE ARE SAME AS THOSE ON THE OPPOSITE SIDE OF THE CENTERLINE.

Santa Clara Valley Transportation Authority

____NO EXCEPTIONS TAKEN (NET)
____MAKE CORRECTIONS NOTED (MCN)
____AMEND AND RESUBMIT (A/R)

Any action shown above is subject to the terms of the contract and does not relieve the Contractor of any of its obligations under the contract, including design and detailing.

Contract No.: DB11002F

By: _____ Date: _____

8' 0' 8' 16'

GRAPHIC SCALE

KEY PLAN

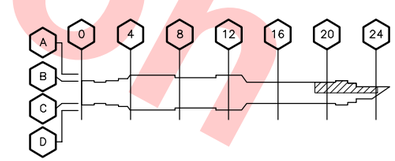

Not For Construction

REV	DATE	BY	SUB	APP	DESCRIPTION
0	20130710				READINESS FOR CONSTRUCTION
					REPLACES C700-S-DB-A101, REV Q

DESIGNED BY S. DEBNATH
DRAWN BY R. COLLADO
CHECKED BY E. BALLADA
IN CHARGE R. BARLAAN
DATE 20130710

LICENSED ARCHITECT SOMESH DEBNATH No. C21523 STATE OF CALIFORNIA

Skanska Shimmick Herzog
1436 California Circle
Milpitas, California 95035
A Joint Venture

Anil Verma Associates, Inc.
1970 Broadway, Suite 525, Oakland, CA 94612
Phone: (510) 835-2537 Fax: (510) 835-2339

Lockwood, Andrews & Newnam, Inc. A LEO A DALY COMPANY
T·Y·LIN INTERNATIONAL

SUBMITTED _____

APPROVED _____

VTA BART SILICON VALLEY

BART SILICON VALLEY BERRYESSA EXTENSION

LINE, TRACK, STATIONS AND SYSTEMS
DESIGN UNIT 023
MILPITAS STATION

RETAINING WALL DRAIN LINE PLAN
SHEET 3 OF 3

CADD FILENAME C700-S-DB-A119.dwg
SIZE D | SCALE 1/8"=1'-0"
CONTRACT NO. C700 | REV. 0
AREA CODE DB | SHEET NO. A119 | PAGE NO. 0342

JosephG Jun 26, 2013 – 1:25pm G:\Current Projects\VTA-Berryessa Extension Project\Station – Milpitas\CAD\Drawings Out\13-0710 C700 Milpitas Station – RFC Submit\C700-S-DB-A119.dwg

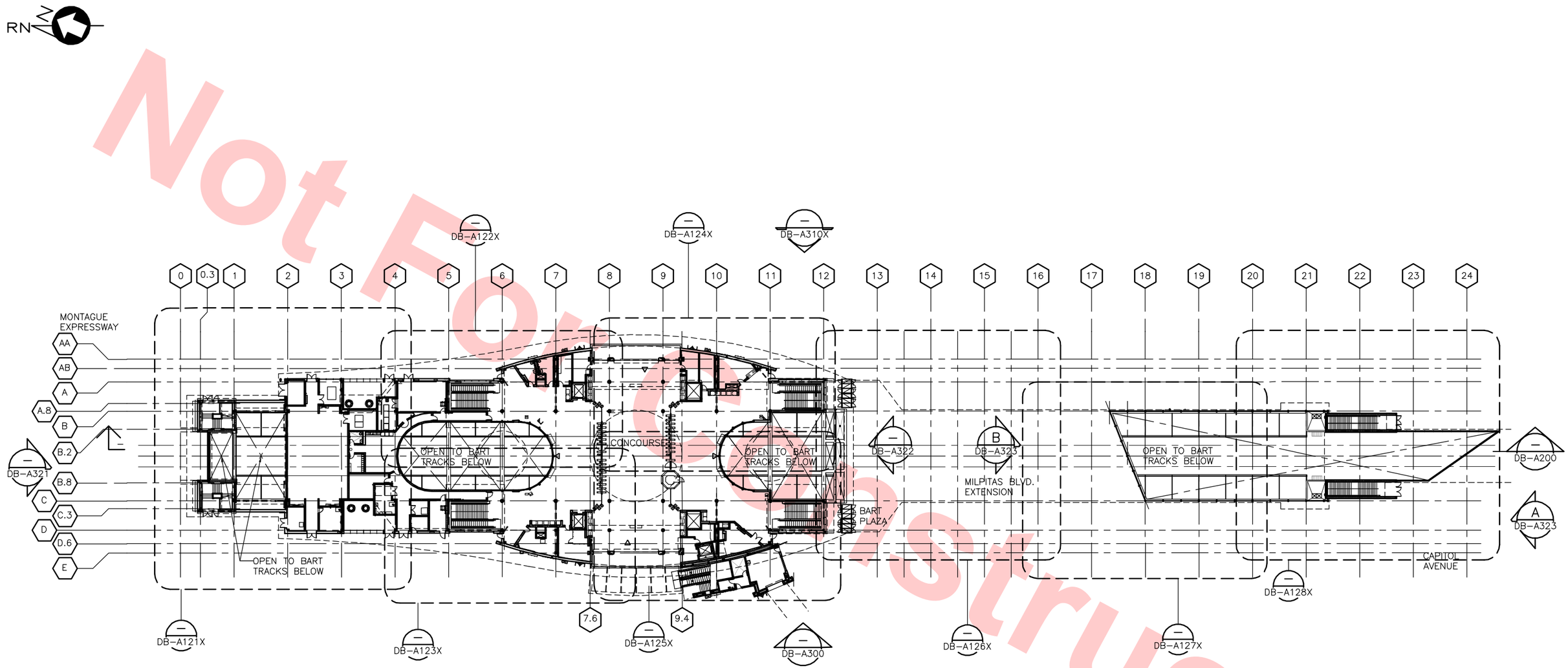

Not For Construction

KEY PLAN – CONCOURSE LEVEL

SCALE: 1/32"=1'-0"

DB-A050

Santa Clara Valley Transportation Authority

____NO EXCEPTIONS TAKEN (NET)
____MAKE CORRECTIONS NOTED (MCN)
____AMEND AND RESUBMIT (A/R)

Any action shown above is subject to the terms of the contract and does not relieve the Contractor of any of its obligations under the contract, including design and detailing.

Contract No.: DB11002F

By: _____ **Date:** _____

32' 0' 32' 64'

GRAPHIC SCALE

REV	DATE	BY	SUB	APP	DESCRIPTION
0	20130710				READINESS FOR CONSTRUCTION
					REPLACES C700-S-DB-A110, REV.P

DESIGNED BY S. DEBNATH
DRAWN BY R. COLLADO
CHECKED BY E. BALLADA
IN CHARGE R. BARLAAN
DATE 20130710

LICENSED ARCHITECT SOMESH DEBNATH No. C21523 STATE OF CALIFORNIA

Skanska Shimmick Herzog
1436 California Circle
Milpitas, California 95035
A Joint Venture

Anil Verma Associates, Inc.
1970 Broadway, Suite 325, Oakland, CA 94612
Phone: (510) 835-2537 Fax: (510) 535-2339

Lockwood, Andrews & Newnam, Inc. A LEA & BALY COMPANY

T·Y·LIN INTERNATIONAL

SUBMITTED _____

APPROVED _____

VTA BART SILICON VALLEY

BART SILICON VALLEY BERRYESSA EXTENSION

LINE, TRACK, STATIONS AND SYSTEMS
DESIGN UNIT 023
MILPITAS STATION

KEY PLAN
CONCOURSE LEVEL

CADD FILENAME C700-S-DB-A120X.dwg
SIZE D | SCALE 1/32"=1'-0"
CONTRACT NO. C700 | REV. 0
AREA CODE DB | SHEET NO. A120X | PAGE NO. 0343

JosephG Jun 26, 2013 – 1:25pm G:\Current Projects\VTA-Berryessa Extension Project\Station – Milpitas\CAD\Drawings Out\13-0710 C700 Milpitas Station – RFC Submit\C700-S-DB-A120X.dwg

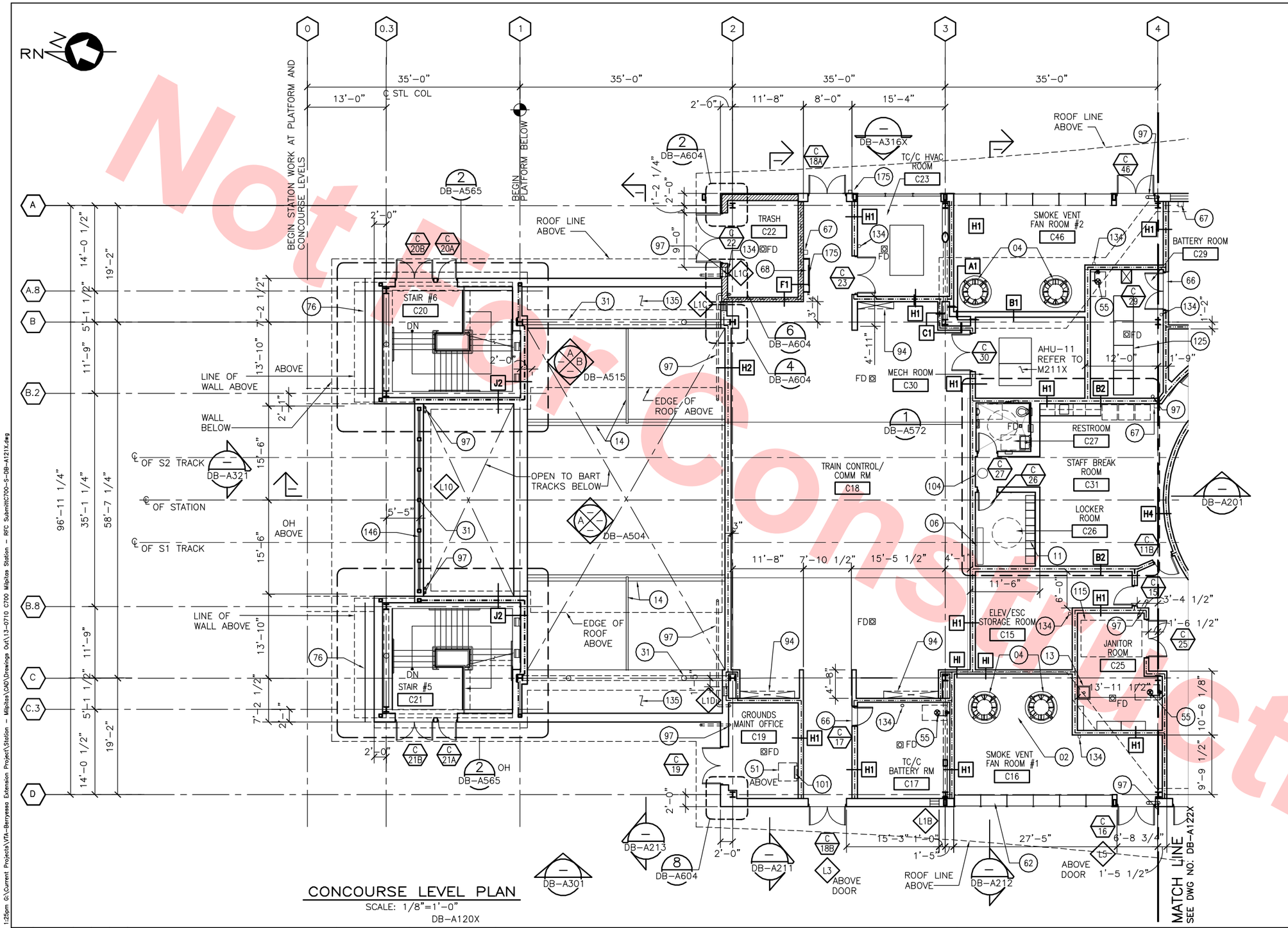

CONCOURSE LEVEL PLAN

SCALE: 1/8"=1'-0"

DB-A120X

Not For Construction

KEY NOTES

- 02 AIR SHAFT BELOW
- 04 SMOKE EVACUATION FAN
- 06 BENCH
- 13 UTILITY SINK
- 14 SLPA AND SUPPORT BELOW
- 31 STRUCTURAL MEMBER
- 51 ACCESS HATCH
- 55 EYEWASH
- 61 ART GLASS PANE (OWNER PROVIDED CONTRACTOR INSTALLED)
- 62 LOUVER
- 66 6" HIGH CONTAINMENT CURB AT ALL SIDES OF ROOM, SEE DETAIL 7/DB-A605
- 67 FIRE EXTINGUISHER CABINET – SEE FIRE PROTECTION DRAWINGS
- 68 FIRE HOSE CABINET – SEE FIRE PROTECTION DRAWINGS AND BFS AS65–AS67
- 76 RAILING – METAL
- 94 PROVIDE PIPE SLEEVES IN THE FLOOR SLAB. SIZE, SPACING AND NO. AS REQUIRED. REFER TO COMMUNICATION DRAWINGS
- 97 DOWNSPOUT/RAINWATER LEADER
- 101 FIXED LADDER
- 104 WATER HEATER ABOVE
- 115 FLOOR CLEANING MACHINE (NIC)
- 125 BATTERY RACK
- 134 FIRE EXTINGUISHER – SEE FIRE PROTECTION DRAWINGS
- 135 SHEET METAL COVER
- 146 DECORATIVE STAINLESS STEEL MESH
- 175 FIRE HOSE CONNECTION – SEE FIRE PROTECTION DRAWINGS

Santa Clara Valley Transportation Authority

____NO EXCEPTIONS TAKEN (NET)
____MAKE CORRECTIONS NOTED (MCN)
____AMEND AND RESUBMIT (A/R)

Any action shown above is subject to the terms of the contract and does not relieve the Contractor of any of its obligations under the contract, including design and detailing.

Contract No.: DB11002F

By: _____ Date: _____

8' 0' 8' 16'

GRAPHIC SCALE

KEY PLAN

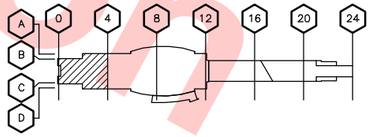

REV	DATE	BY	SUB	APP	DESCRIPTION
0	20130710				READINESS FOR CONSTRUCTION
					REPLACES C700-S-DB-A111, REV. R

DESIGNED BY S. DEBNATH
DRAWN BY R. COLLADO
CHECKED BY E. BALLADA
IN CHARGE R. BARLAAN
DATE 20130710

LICENSED ARCHITECT SOMESH DEBNATH No. C21523 STATE OF CALIFORNIA

Skanska Shimmick Herzog
1436 California Circle
Milpitas, California 95035
A Joint Venture

Anil Verma Associates, Inc.
1970 Broadway, Suite 525, Oakland, CA 94612
Phone: (510) 835-2537 Fax: (510) 535-2339
SUBMITTED

Lockwood, Andrews & Newnam, Inc. A LAN & BALY COMPANY
T·Y·LIN INTERNATIONAL
APPROVED

VTA BART SILICON VALLEY
BART SILICON VALLEY BERRYESSA EXTENSION

LINE, TRACK, STATIONS AND SYSTEMS DESIGN UNIT 023
MILPITAS STATION

CONCOURSE LEVEL PLAN
SHEET 1 OF 8

CADD FILENAME C700-S-DB-A121X.dwg
SIZE D | SCALE 1/8"=1'-0"
CONTRACT NO. C700 | REV. 0
AREA CODE DB | SHEET NO. A121X | PAGE NO. 0344

JosephG Jun 26, 2013 – 1:25pm G:\Current Projects\VTA-Berryessa Extension Project\Station – Milpitas\CAD\Drawings Out\13-0710 C700 Milpitas Station – RFC Submit\C700-S-DB-A121X.dwg

NOTE

FOR DIMENSIONS OF EXT. WALL GEOMETRY, SEE DWG NO. DB–A124X OH

KEY NOTES

01 MAP CASE – WALL–MOUNTED, BFS DET 4/AS83
03 INFO KIOSK
06 BENCH
08 TRASH RECEPTACLE
09 NEWSPAPER RECYCLING RECEPTACLE, NIC
10 NEWSPAPER RACK
14 SLPA AND SUPPORT BELOW
19 PUBLIC PAY PHONE(S)
29 STRUCTURAL COLUMN
33 ACCESSIBLE FARE GATE, PER BFS
34 FUTURE FARE GATES, PER BFS
36 TICKET VENDING MACHINE, BFS SHT J001–J004
37 FUTURE TVM, PER BFS
38 ADD FARE/PARKING MACHINES, SEE BFS SHTS J001–J004
39 FUTURE ADD FARE/PARKING MACHINES
41 BUS TRANSFER MACHINE, PER BFS
42 SERVICE GATE, BFS DET 1/AS70
44 REMOVABLE GUARDRAIL
45 GUARDRAIL ASSEMBLY – GLASS
51 ACCESS HATCH
52 DRINKING FOUNTAIN
53 BICYCLE RACK(S)
67 FIRE EXTINGUISHER CABINET – SEE FIRE PROTECTION DRAWINGS
68 FIRE HOSE CABINET – SEE FIRE PROTECTION DRAWINGS AND BFS SHEETS AS65–AS67
73 EXTERIOR WING WALL, COMPOSITE WALL PANEL WP–1 BOTH SIDES OF 8" STUDS
75 HORIZONTAL STRUCTURAL POINT SUPPORTED GLASS SKYLIGHT SYSTEM
97 DOWNSPOUT/RAINWATER LEADER
98 TRENCH DRAIN, SEE DETAIL 5/DB–A605
101 FIXED LADDER, SEE DETAIL 10/DB–A613
121 FRAMELESS GLASS WALL SYSTEM – TYPE 2
122 SHAFT
124 BUS SCHEDULE RACK
127 FIRE ALARM PULL STATION
131 GLASS BARRIER

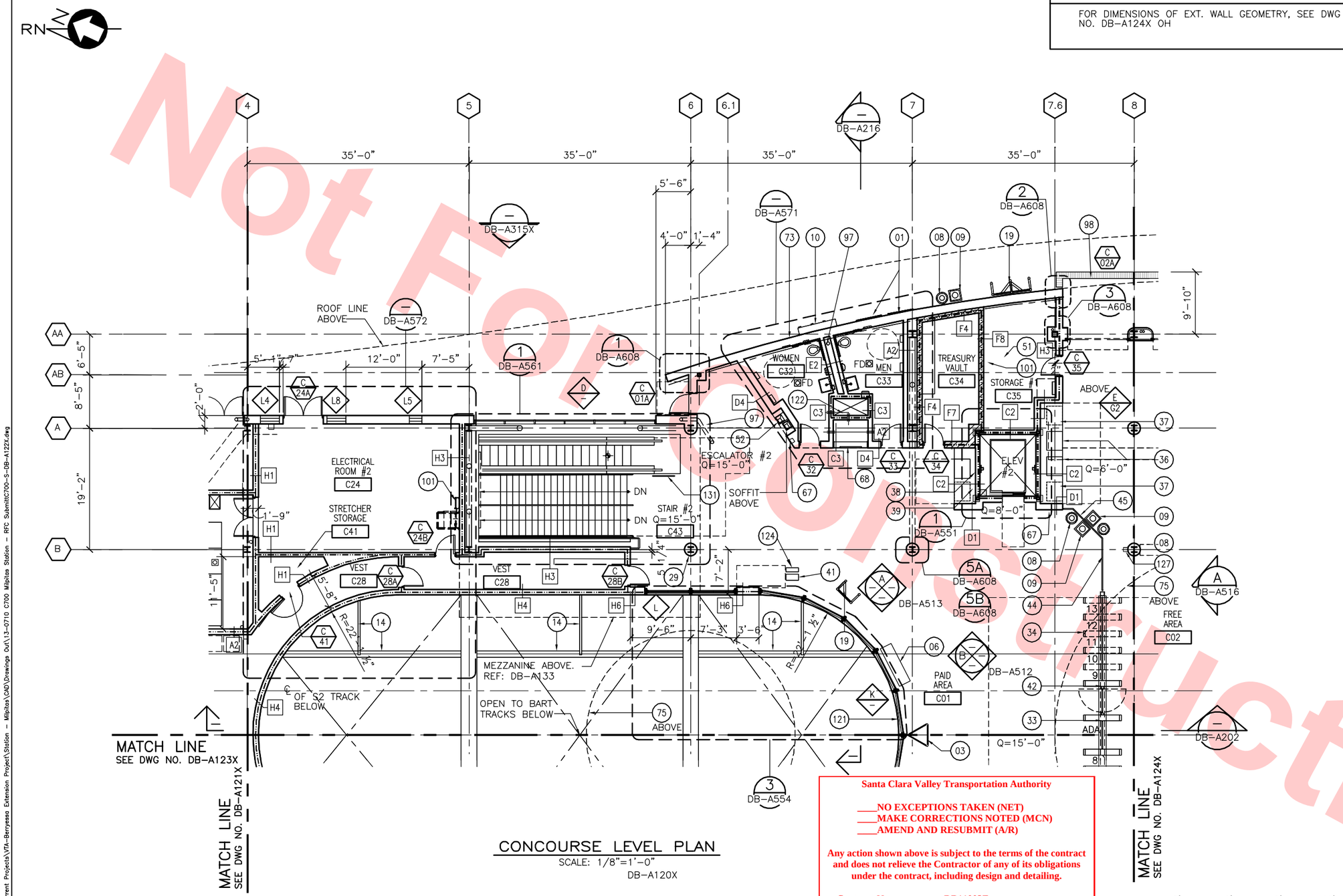

CONCOURSE LEVEL PLAN
SCALE: 1/8"=1'–0"
DB–A120X

Santa Clara Valley Transportation Authority

____NO EXCEPTIONS TAKEN (NET)
____MAKE CORRECTIONS NOTED (MCN)
____AMEND AND RESUBMIT (A/R)

Any action shown above is subject to the terms of the contract and does not relieve the Contractor of any of its obligations under the contract, including design and detailing.

Contract No.: DB11002F

By: _____ Date: _____

8' 0' 8' 16'
GRAPHIC SCALE

KEY PLAN

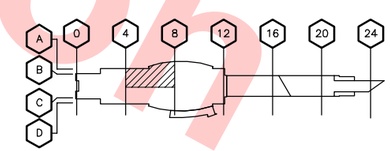

Not For Construction

REV	DATE	BY	SUB	APP	DESCRIPTION
0	20130710				READINESS FOR CONSTRUCTION
					REPLACES C700–S–DB–A112, REV. R

DESIGNED BY S. DEBNATH
DRAWN BY R. COLLADO
CHECKED BY E. BALLADA
IN CHARGE R. BARLAAN
DATE 20130710

LICENSED ARCHITECT SOMESH DEBNATH No. C21523 STATE OF CALIFORNIA

Skanska Shimmick Herzog
1436 California Circle
Milpitas, California 95035
A Joint Venture

Anil Verma Associates, Inc.
1970 Broadway, Suite 325, Oakland, CA 94612
Phone: (510) 535-2537 Fax: (510) 535-2339
SUBMITTED

Lockwood, Andrews & Newnam, Inc. A LEO A DALY COMPANY
T·Y·LIN INTERNATIONAL
APPROVED

VTA BART SILICON VALLEY
BART SILICON VALLEY BERRYESSA EXTENSION

LINE, TRACK, STATIONS AND SYSTEMS
DESIGN UNIT 023
MILPITAS STATION

CONCOURSE LEVEL PLAN
SHEET 2 OF 8

CADD FILENAME C700–S–DB–A122X.dwg
SIZE D | SCALE 1/8"=1'–0"
CONTRACT NO. C700 | REV. 0
AREA CODE DB | SHEET NO. A122X | PAGE NO. 0345

JosephG Jun 26, 2013 – 1:26pm G:\Current Projects\VTA–Berryessa Extension Project\Station – Milpitas\CAD\Drawings Out\13–0710 C700 Milpitas Station – RFC Submit\C700–S–DB–A122X.dwg

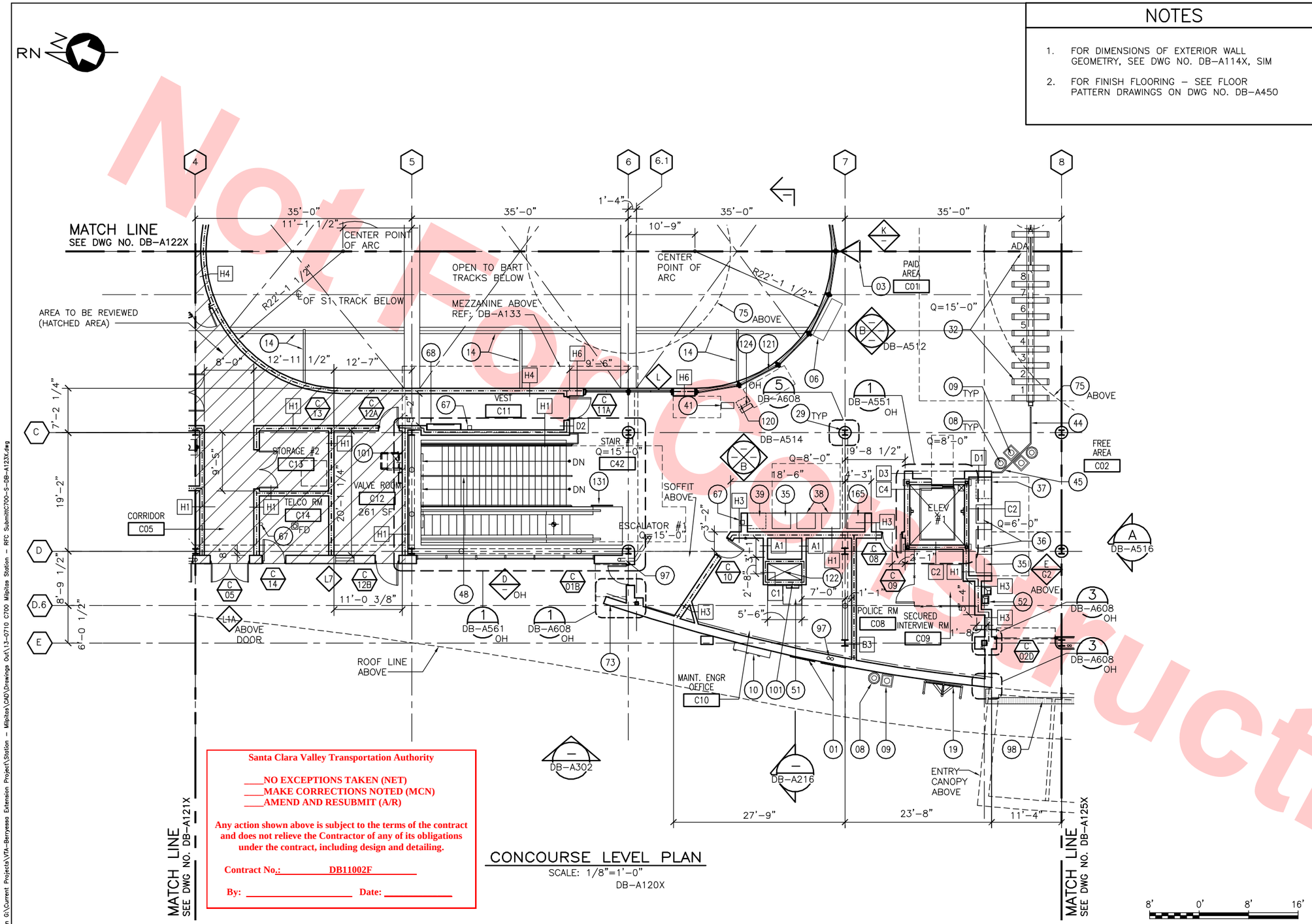

CONCOURSE LEVEL PLAN

SCALE: 1/8"=1'-0"

DB-A120X

Santa Clara Valley Transportation Authority

____NO EXCEPTIONS TAKEN (NET)
____MAKE CORRECTIONS NOTED (MCN)
____AMEND AND RESUBMIT (A/R)

Any action shown above is subject to the terms of the contract and does not relieve the Contractor of any of its obligations under the contract, including design and detailing.

Contract No.: DB11002F

By: _____ Date: _____

NOTES

1. FOR DIMENSIONS OF EXTERIOR WALL GEOMETRY, SEE DWG NO. DB-A114X, SIM
2. FOR FINISH FLOORING – SEE FLOOR PATTERN DRAWINGS ON DWG NO. DB-A450

KEY NOTES

- 01 MAP CASE – WALL-MOUNTED, BFS DET 4/AS83
- 03 INFO KIOSK – THREE-SIDED, BFS DET 1/AS85
- 06 BENCH
- 08 TRASH RECEPTACLE
- 09 NEWSPAPER RECYCLING RECEPTACLE, NIC
- 10 NEWSPAPER RACK
- 14 SLPA BELOW
- 19 PUBLIC PAY PHONE(S)
- 29 STRUCTURAL COLUMN
- 32 FARE GATES, BFS SHT J005 & J006
- 35 BILL TO BILL CHANGER (BBC), PER BFS
- 36 TICKET VENDING MACHINE, BFS SHT J001–J004
- 37 FUTURE TVM, PER BFS
- 38 ADD FARE/PARKING MACHINES, SEE BFS SHTS J001–J004
- 39 FUTURE ADD FARE/PARKING MACHINE
- 41 BUS TRANSFER MACHINE, PER BFS
- 44 REMOVABLE GUARDRAIL
- 45 GUARDRAIL ASSEMBLY – GLASS
- 48 HANDRAIL – METAL
- 51 ACCESS HATCH
- 52 DRINKING FOUNTAIN
- 53 BICYCLE RACK(S)
- 67 FIRE EXTINGUISHER CABINET – SEE FIRE PROTECTION DRAWINGS
- 68 FIRE HOSE CABINET – SEE FIRE PROTECTION DRAWINGS AND BFS SHEETS AS65–AS67
- 73 EXTERIOR WING WALL, COMPOSITE WALL PANEL WP-1 BOTH SIDES OF 8" STUDS
- 75 HORIZONTAL STRUCTURAL POINT SUPPORTED GLASS SKYLIGHT SYSTEM
- 97 DOWNSPOUT/RAINWATER LEADER
- 98 TRENCH DRAIN, SEE DETAIL 5/DB-A605
- 101 FIXED LADDER
- 120 FUTURE BTM
- 121 FRAMELESS GLASS WALL SYSTEM – TYPE 2
- 122 SHAFT
- 124 BUS SCHEDULE RACK
- 131 GLASS BARRIER
- 165 PARKING VALIDATION MACHINE (PVM)

KEY PLAN

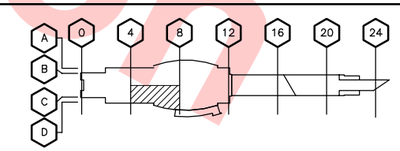

REV	DATE	BY	SUB	APP	DESCRIPTION
0	20130710				READINESS FOR CONSTRUCTION
					REPLACES C700-S-DB-A113, REV. R

DESIGNED BY S. DEBNATH
DRAWN BY R. COLLADO
CHECKED BY E. BALLADA
IN CHARGE R. BARLAAN
DATE 20130710

LICENSED ARCHITECT SOMESH DEBNATH No. C21523 STATE OF CALIFORNIA

Skanska Shimmick Herzog
1436 California Circle
Milpitas, California 95035
A Joint Venture

Anil Verma Associates, Inc.
1970 Broadway, Suite 225, Oakland, CA 94612
Phone: (510) 835-2537 Fax: (510) 835-2339

Lockwood, Andrews & Newnam, Inc. A LAN & BALY COMPANY

T·Y·LIN INTERNATIONAL

SUBMITTED _____ APPROVED _____

VTA BART SILICON VALLEY

BART SILICON VALLEY BERRYESSA EXTENSION

LINE, TRACK, STATIONS AND SYSTEMS
DESIGN UNIT 023
MILPITAS STATION

CONCOURSE LEVEL PLAN
SHEET 3 OF 8

CADD FILENAME C700-S-DB-A123X.dwg
SIZE D | SCALE 1/8"=1'-0"
CONTRACT NO. C700 | REV. 0
AREA CODE DB | SHEET NO. A123X | PAGE NO. 0346

Not For Construction

JosephG Jun 26, 2013 – 1:26pm G:\Current Projects\VTA-Berryessa Extension Project\Station – Milpitas\CAD\Drawings Out\13-0710 C700 Milpitas Station – RFC Submit\C700-S-DB-A123X.dwg

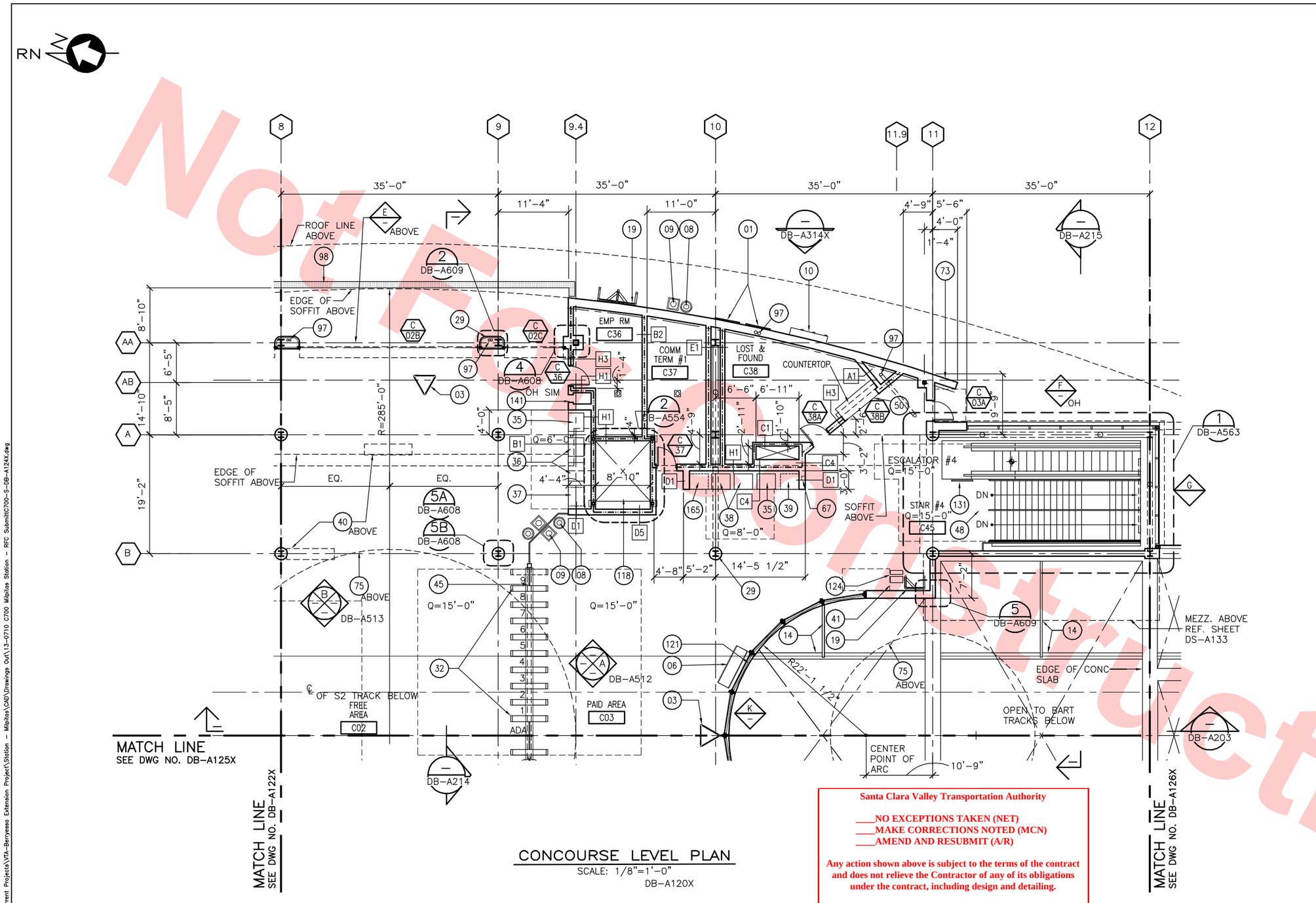

CONCOURSE LEVEL PLAN
SCALE: 1/8"=1'-0"
DB-A120X

Santa Clara Valley Transportation Authority

____NO EXCEPTIONS TAKEN (NET)
____MAKE CORRECTIONS NOTED (MCN)
____AMEND AND RESUBMIT (A/R)

Any action shown above is subject to the terms of the contract and does not relieve the Contractor of any of its obligations under the contract, including design and detailing.

Contract No.: DB11002F

By: _____ Date: _____

KEY NOTES

- 01 MAP CASE – WALL-MOUNTED, BFS DET 4/AS83
- 03 INFO KIOSK – THREE-SIDED, BFS DET 1/AS85
- 06 BENCH
- 08 TRASH RECEPTACLE
- 09 NEWSPAPER RECYCLING RECEPTACLE, NIC
- 10 NEWSPAPER RACK
- 14 SLPA AND SUPPORT BELOW
- 19 PUBLIC PAY PHONE(S)
- 29 STRUCTURAL COLUMN
- 32 FARE GATES, BFS SHT J005 & J006
- 35 BILL TO BILL CHANGER (BBC), PER BFS
- 36 TICKET VENDING MACHINE, BFS SHT J001–J004
- 37 FUTURE TVM, PER BFS
- 38 ADD FARE/PARKING MACHINE, SEE BFS SHTS J001–J004
- 39 FUTURE ADD FARE/PARKING MACHINE
- 40 TRAIN INFORMATION MONITOR
- 41 BUS TRANSFER MACHINE, PER BFS
- 45 GUARDRAIL ASSEMBLY – GLASS
- 48 HANDRAIL – METAL
- 50 OVERHEAD COILING DOOR
- 53 BICYCLE RACK(S)
- 67 FIRE EXTINGUISHER CABINET – SEE FIRE PROTECTION DRAWINGS
- 73 EXTERIOR WING WALL, COMPOSITE WALL PANEL WP-1 BOTH SIDES OF 8" STUDS
- 75 HORIZONTAL STRUCTURAL POINT SUPPORTED GLASS SKYLIGHT SYSTEM
- 97 DOWNSPOUT/RAINWATER LEADER
- 98 TRENCH DRAIN, SEE DETAIL 5/DB-A605
- 118 KNOCK-OUT CONCRETE SLAB – SEE STRUCTURAL DRAWINGS
- 121 GLASS WALL SYSTEM TYPE 2
- 124 BUS SCHEDULE RACK
- 131 GLASS BARRIER
- 141 RECESSED DEFIBRILLATOR CABINET
- 165 PARKING VALIDATION MACHINE (PVM)

8' 0' 8' 16'
GRAPHIC SCALE

KEY PLAN

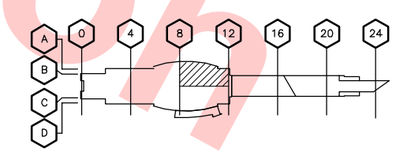

REV	DATE	BY	SUB	APP	DESCRIPTION
0	20130710				READINESS FOR CONSTRUCTION
					REPLACES C700-S-DB-A114, REV. P

DESIGNED BY S. DEBNATH
DRAWN BY R. COLLADO
CHECKED BY E. BALLADA
IN CHARGE R. BARLAAN
DATE 20130710

LICENSED ARCHITECT SOMESH DEBNATH No. C21523 STATE OF CALIFORNIA

Skanska Shimmick Herzog
1436 California Circle
Milpitas, California 95035
A Joint Venture

Anil Verma Associates, Inc.
1970 Broadway, Suite 225, Oakland, CA 94612
Phone: (510) 835-2537 Fax: (510) 835-2339

Lockwood, Andrews & Newnam, Inc. A LAN & BALY COMPANY

T·Y·LIN INTERNATIONAL

SUBMITTED _____ APPROVED _____

VTA BART SILICON VALLEY
BART SILICON VALLEY BERRYESSA EXTENSION

LINE, TRACK, STATIONS AND SYSTEMS DESIGN UNIT 023
MILPITAS STATION

CONCOURSE LEVEL PLAN
SHEET 4 OF 8

CADD FILENAME C700-S-DB-A124X.dwg
SIZE D | SCALE 1/8"=1'-0"
CONTRACT NO. C700 | REV. 0
AREA CODE DB | SHEET NO. A124X | PAGE NO. 0347

Not For Construction

JosephG Jun 26, 2013 – 1:27pm G:\Current Projects\VTA-Berryessa Extension Project\Station – Milpitas\CAD\Drawings Out\13-0710 C700 Milpitas Station – RFC Submit\C700-S-DB-A124X.dwg

Santa Clara Valley Transportation Authority

____NO EXCEPTIONS TAKEN (NET)
____MAKE CORRECTIONS NOTED (MCN)
____AMEND AND RESUBMIT (A/R)

Any action shown above is subject to the terms of the contract and does not relieve the Contractor of any of its obligations under the contract, including design and detailing.

Contract No.: DB11002F

By: _____ Date: _____

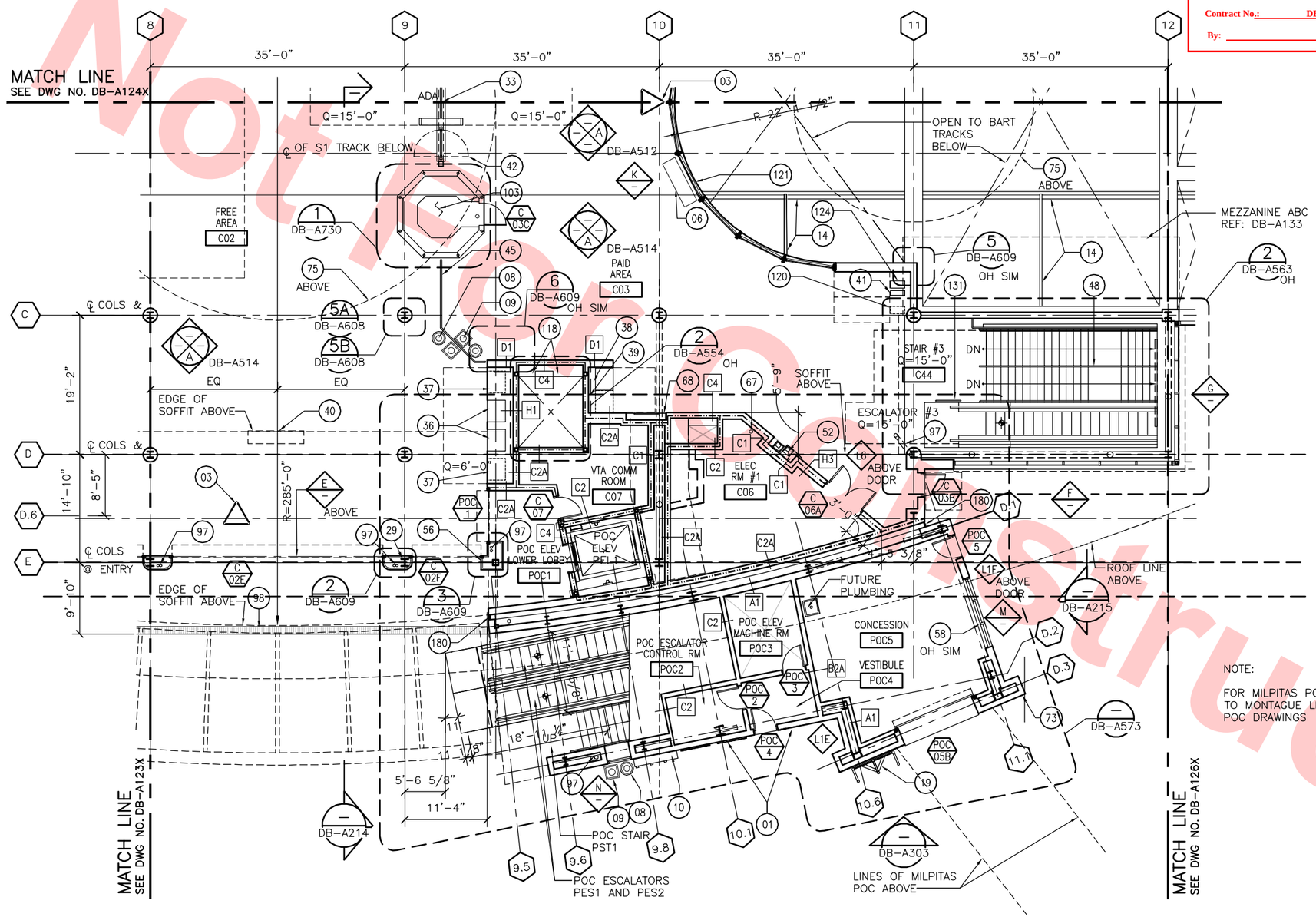

NOTE:

FOR MILPITAS POC REFER TO MONTAGUE LRT AND MILPITAS POC DRAWINGS

CONCOURSE LEVEL PLAN

SCALE: 1/8"=1'-0"

DB-A120X

8' 0' 8' 16'

GRAPHIC SCALE

KEY NOTES

- 01 MAP CASE – WALL-MOUNTED, BFS DET 4/AS83
- 03 INFO KIOSK – THREE-SIDED, BFS DET 1/AS85
- 06 BENCH
- 08 TRASH RECEPTACLE
- 09 NEWSPAPER RECYCLING RECEPTACLE, NIC
- 10 NEWSPAPER RACK
- 14 SLPA AND SUPPORT BELOW
- 19 PUBLIC PAY PHONE(S)
- 29 STRUCTURAL COLUMN
- 33 ACCESSIBLE FARE GATE, PER BFS
- 36 TICKET VENDING MACHINE, BFS SHT J001–J004
- 37 FUTURE TVM, PER BFS
- 38 ADD FARE/PARKING MACHINE, SEE BFS SHTS J001–J004
- 39 FUTURE ADD FARE/PARKING MACHINE
- 40 TRAIN INFORMATION MONITOR
- 41 BUS TRANSFER MACHINE, PER BFS
- 42 SERVICE GATE, BFS DET 1/AS70
- 45 GUARDRAIL ASSEMBLY – GLASS
- 48 HANDRAIL – METAL
- 52 DRINKING FOUNTAIN
- 56 METAL COLUMN COVER TO MATCH COMPOSITE WALL PANEL WP-1
- 58 GLASS WALL SYSTEM TYPE 1
- 68 FIRE HOSE CABINET – SEE FIRE PROTECTION DRAWINGS AND BFS SHEETS AS65–AS67
- 73 EXTERIOR WING WALL, COMPOSITE WALL PANEL WP-1 BOTH SIDES OF 8" STUDS
- 75 HORIZONTAL STRUCTURAL POINT SUPPORTED GLASS SKYLIGHT SYSTEM
- 97 DOWNSPOUT/RAINWATER LEADER
- 98 TRENCH DRAIN, SEE DETAIL 5/DB-A605
- 103 STATION AGENT'S BOOTH, PER BFS
- 118 KNOCK-OUT CONCRETE SLAB – SEE STRUCTURAL DRAWINGS
- 120 FUTURE BTM
- 121 FRAMELESS GLASS WALL SYSTEM TYPE 2
- 124 BUS SCHEDULE RACK
- 131 GLASS BARRIER
- 180 8" WALL EXPANSION JOINT COVER

KEY PLAN

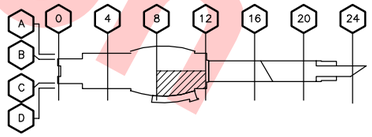

REV	DATE	BY	SUB	APP	DESCRIPTION
0	20130710				READINESS FOR CONSTRUCTION
					REPLACES C700-S-DB-A115, REV. R

DESIGNED BY S. DEBNATH
DRAWN BY R. COLLADO
CHECKED BY E. BALLADA
IN CHARGE R. BARLAAN
DATE 20130710

LICENSED ARCHITECT SOMESH DEBNATH No. C21523 STATE OF CALIFORNIA

Skanska Shimmick Herzog
1436 California Circle
Milpitas, California 95035
A Joint Venture

Anil Verma Associates, Inc.
1970 Broadway, Suite 525 Oakland, CA 94612
Phone: (510) 835-2537 Fax: (510) 535-2339
SUBMITTED

Lockwood, Andrews & Newnam, Inc. A LAN & BALY COMPANY
T·Y·LIN INTERNATIONAL
APPROVED

VTA BART SILICON VALLEY
BART SILICON VALLEY BERRYESSA EXTENSION

LINE, TRACK, STATIONS AND SYSTEMS
DESIGN UNIT 023
MILPITAS STATION

CONCOURSE LEVEL PLAN
SHEET 5 OF 8

CADD FILENAME C700-S-DB-A125X.dwg
SIZE D | SCALE 1/8"=1'-0"
CONTRACT NO. C700 | REV. 0
AREA CODE DB | SHEET NO. A125X | PAGE NO. 0348

JosephG Jun 26, 2013 – 1:27pm G:\Current Projects\VTA-Berryessa Extension Project\Station – Milpitas\CAD\Drawings Out\13-0710 C700 Milpitas Station – RFC Submit\C700-S-DB-A125X.dwg

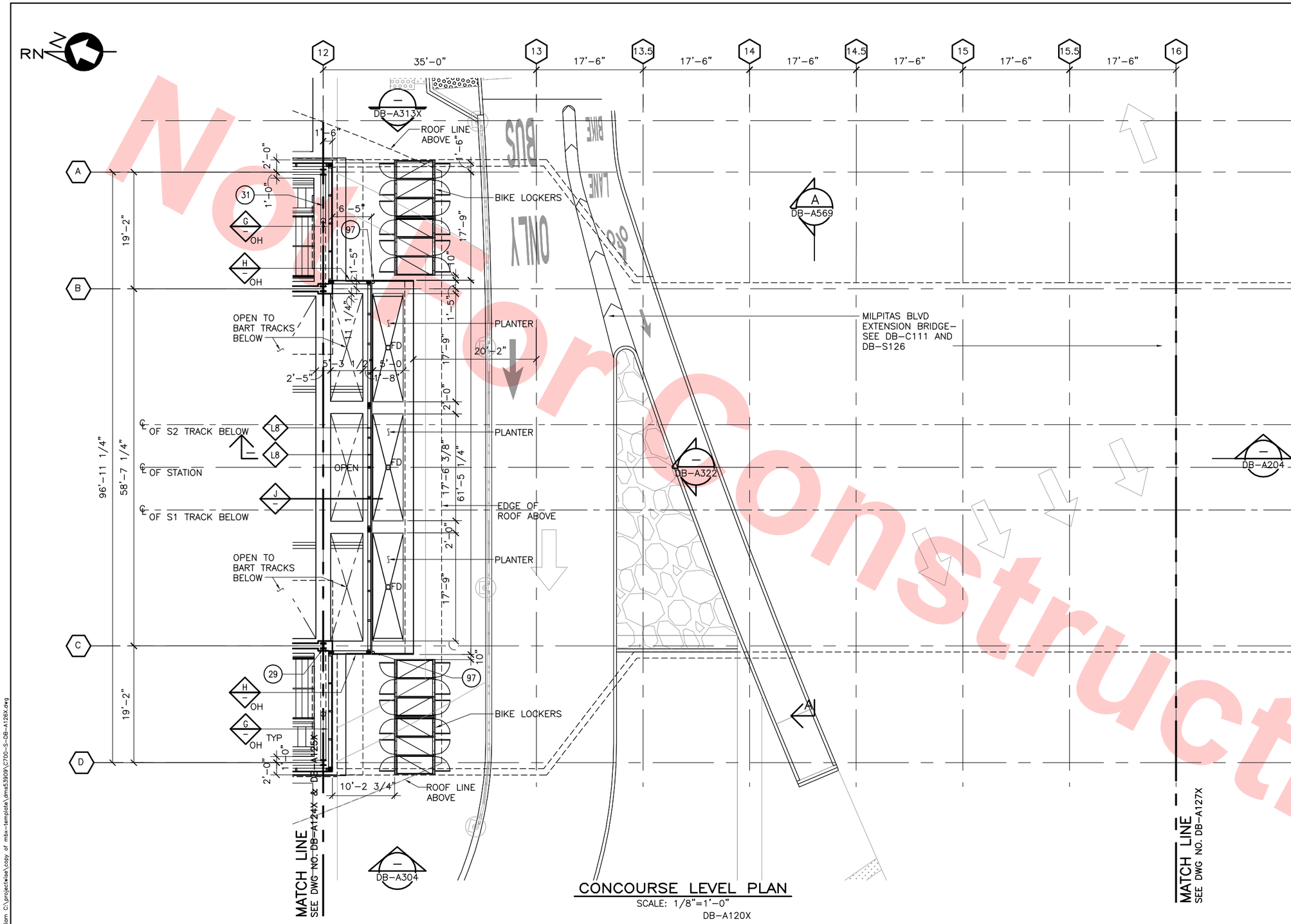

CONCOURSE LEVEL PLAN

SCALE: 1/8"=1'-0"

DB-A120X

Not for Construction

KEY NOTES

29 STRUCTURAL COLUMN

31 STRUCTURAL MEMBER

97 DOWNSPOUT/RAINWATER LEADER

Santa Clara Valley Transportation Authority

____NO EXCEPTIONS TAKEN (NET)
____MAKE CORRECTIONS NOTED (MCN)
____AMEND AND RESUBMIT (A/R)

Any action shown above is subject to the terms of the contract and does not relieve the Contractor of any of its obligations under the contract, including design and detailing.

Contract No.: DB11002F

By: _____ Date: _____

8' 0' 8' 16'

GRAPHIC SCALE

KEY PLAN

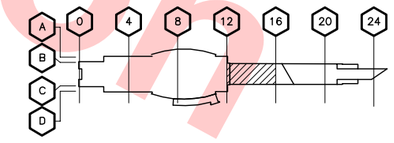

REV	DATE	BY	SUB	APP	DESCRIPTION
0	20130710				READINESS FOR CONSTRUCTION
					REPLACES C700-S-DB-A116, REV. R

DESIGNED BY S. DEBNATH
DRAWN BY R. COLLADO
CHECKED BY E. BALLADA
IN CHARGE R. BARLAAN
DATE 20130710

LICENSED ARCHITECT SOMESH DEBNATH No. C21523 STATE OF CALIFORNIA

Skanska Shimmick Herzog
1436 California Circle
Milpitas, California 95035
A Joint Venture

Anil Verma Associates, Inc.
1970 Broadway, Suite 525, Oakland, CA 94612
Phone: (510) 835-2577 Fax: (510) 535-2339

Lockwood, Andrews & Newnam, Inc. A LEO A DALY COMPANY

T·Y·LIN INTERNATIONAL

SUBMITTED

APPROVED

VTA BART SILICON VALLEY

BART SILICON VALLEY BERRYESSA EXTENSION

LINE, TRACK, STATIONS AND SYSTEMS DESIGN UNIT 023
MILPITAS STATION

CONCOURSE LEVEL PLAN
SHEET 6 OF 8

CADD FILENAME C700-S-DB-A126X.dwg
SIZE D | SCALE 1/8"=1'-0"
CONTRACT NO. C700 | REV. 0
AREA CODE DB | SHEET NO. A126X | PAGE NO. 0349

rufoc Jul 03, 2013 - 10:36am C:\projectwise\copy of mbx-template\dms53909\C700-S-DB-A126X.dwg

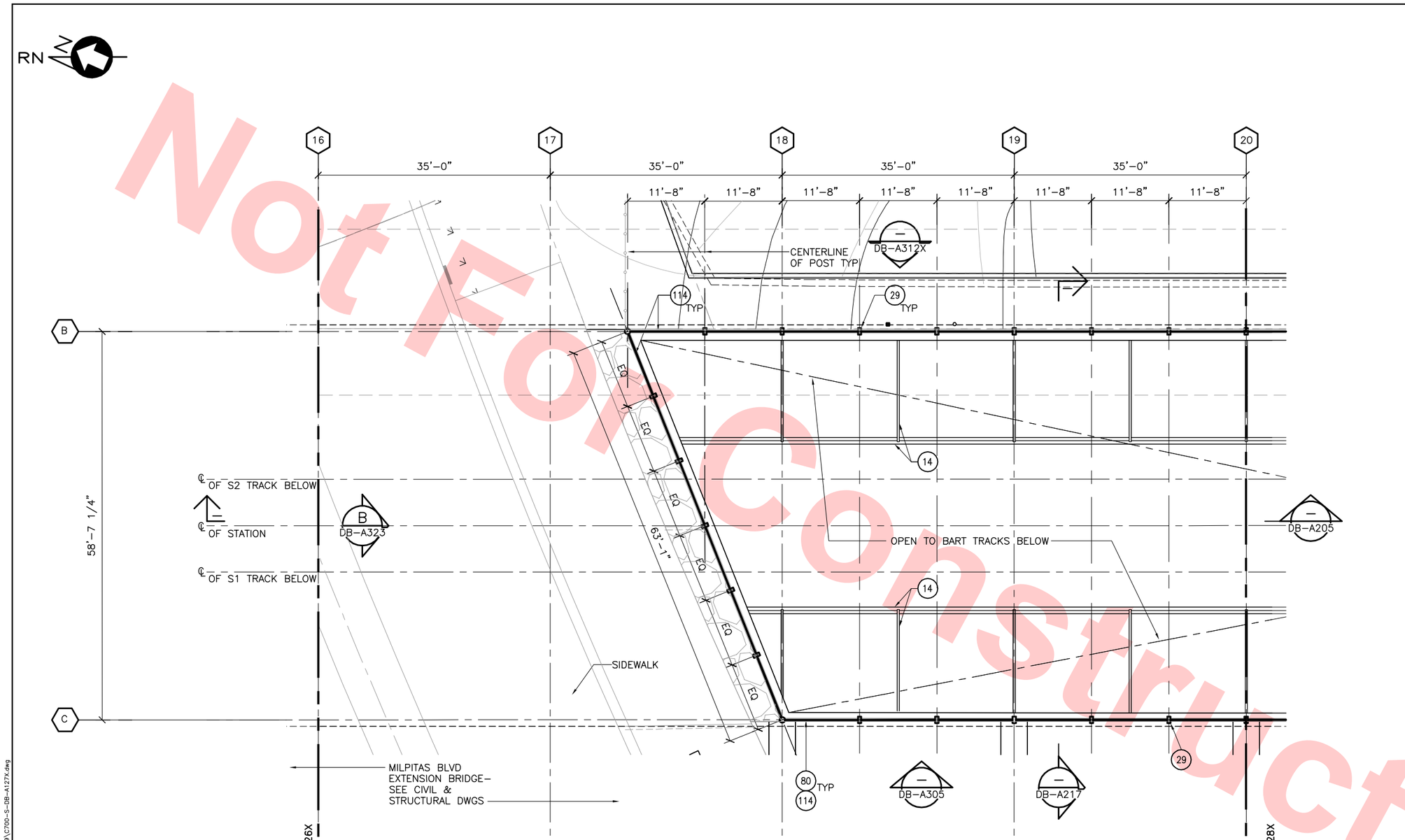

CONCOURSE LEVEL PLAN

SCALE: 1/8"=1'-0"

DB-A120X

KEY NOTES

14 SLPA AND SUPPORT BELOW
29 STRUCTURAL COLUMN
80 PRE-CAST CONCRETE WALL PANEL
114 METAL WALL PANEL – TYPE 2

Santa Clara Valley Transportation Authority

____NO EXCEPTIONS TAKEN (NET)
____MAKE CORRECTIONS NOTED (MCN)
____AMEND AND RESUBMIT (A/R)

Any action shown above is subject to the terms of the contract and does not relieve the Contractor of any of its obligations under the contract, including design and detailing.

Contract No.: DB11002F

By: _____ **Date:** _____

8' 0' 8' 16'

GRAPHIC SCALE

KEY PLAN

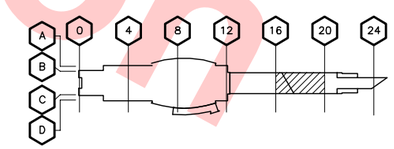

Not For Construction

REV	DATE	BY	SUB	APP	DESCRIPTION
0	20130710				READINESS FOR CONSTRUCTION
					REPLACES C700-S-DB-A117 REV. P

DESIGNED BY S. DEBNATH
DRAWN BY R. COLLADO
CHECKED BY E. BALLADA
IN CHARGE R. BARLAAN
DATE 20130710

LICENSED ARCHITECT SOMESH DEBNATH No. C21523 STATE OF CALIFORNIA

Skanska Shimmick Herzog
1436 California Circle
Milpitas, California 95035
A Joint Venture

Anil Verma Associates, Inc.
1970 Broadway, Suite 325 Oakland, CA 94612
Phone: (510) 835-2537 Fax: (510) 835-2539

SUBMITTED

Lockwood, Andrews & Newnam, Inc. A CH2M HILL COMPANY
T·Y·LIN INTERNATIONAL

APPROVED

VTA BART SILICON VALLEY

BART SILICON VALLEY BERRYESSA EXTENSION

LINE, TRACK, STATIONS AND SYSTEMS
DESIGN UNIT 023
MILPITAS STATION

CONCOURSE LEVEL PLAN
SHEET 7 OF 8

CADD FILENAME C700-S-DB-A127X.dwg
SIZE D | SCALE 1/8"=1'-0"
CONTRACT NO. C700 | REV. 0
AREA CODE DB | SHEET NO. A127X | PAGE NO. 0350

rufoc Jul 03, 2013 – 10:37am C:\projectwise\copy of mbx-template\dms53909\C700-S-DB-A127X.dwg

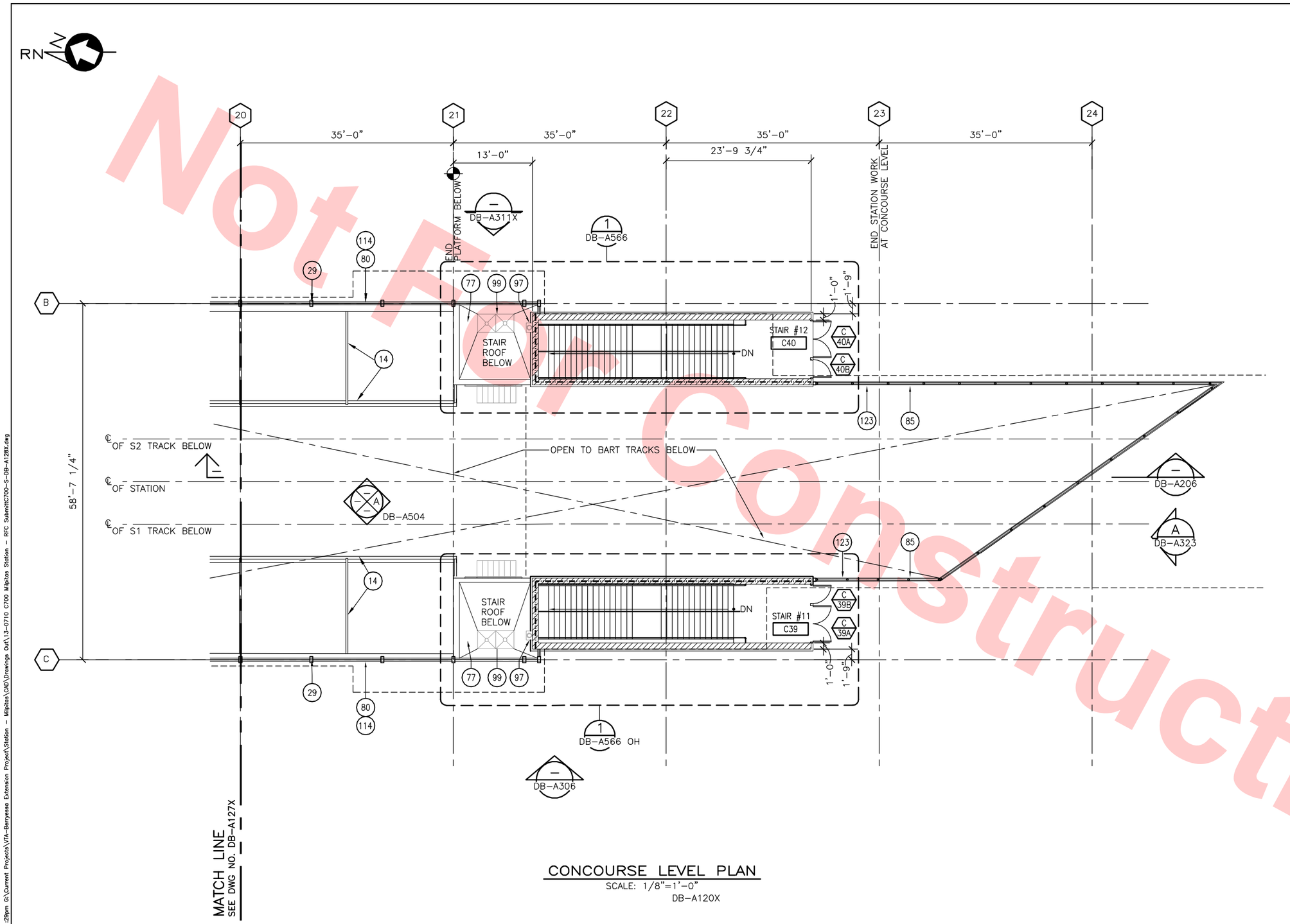

CONCOURSE LEVEL PLAN

SCALE: 1/8"=1'-0"

DB-A120X

KEY NOTES

- (14) SLPA AND SUPPORT BELOW
- (29) STRUCTURAL COLUMN
- (77) MEMBRANE ROOFING
- (80) PRE-CAST CONCRETE WALL PANEL
- (85) TRENCH WALL
- (97) DOWNSPOUT/RAINWATER LEADER
- (99) ROOF DRAIN AND OVERFLOW DRAIN
- (114) METAL WALL PANEL – TYPE 2
- (123) WIRE FENCE

Santa Clara Valley Transportation Authority

____NO EXCEPTIONS TAKEN (NET)
____MAKE CORRECTIONS NOTED (MCN)
____AMEND AND RESUBMIT (A/R)

Any action shown above is subject to the terms of the contract and does not relieve the Contractor of any of its obligations under the contract, including design and detailing.

Contract No.: DB11002F

By: _____ Date: _____

8' 0' 8' 16'

GRAPHIC SCALE

KEY PLAN

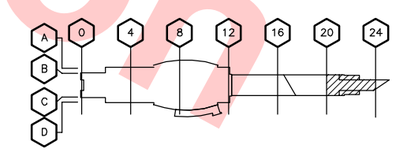

REV	DATE	BY	SUB	APP	DESCRIPTION
0	20130710				READINESS FOR CONSTRUCTION
					REPLACES C700-S-DB-A118, REV. P

DESIGNED BY S. DEBNATH
DRAWN BY R. COLLADO
CHECKED BY E. BALLADA
IN CHARGE R. BARLAAN
DATE 20130710

LICENSED ARCHITECT SOMESH DEBNATH No. C21523 STATE OF CALIFORNIA

Skanska Shimmick Herzog
1436 California Circle
Milpitas, California 95035
A Joint Venture

Anil Verma Associates, Inc.
1970 Broadway, Suite 525 Oakland, CA 94612
Phone: (510) 835-2537 Fax: (510) 835-2339
SUBMITTED

Lockwood, Andrews & Newnam, Inc. A LEO A DALY COMPANY
T·Y·LIN INTERNATIONAL
APPROVED

VTA BART SILICON VALLEY
BART SILICON VALLEY BERRYESSA EXTENSION

LINE, TRACK, STATIONS AND SYSTEMS
DESIGN UNIT 023
MILPITAS STATION

CONCOURSE LEVEL PLAN
SHEET 8 OF 8

CADD FILENAME C700-S-DB-A128X.dwg
SIZE D | SCALE 1/8"=1'-0"
CONTRACT NO. C700 | REV. 0
AREA CODE DB | SHEET NO. A128X | PAGE NO. 0351

Not For Construction

JosephG Jun 26, 2013 – 1:29pm G:\Current Projects\VTA-Berryessa Extension Project\Station – Milpitas\CAD\Drawings Out\13-0710 C700 Milpitas Station – RFC Submit\C700-S-DB-A128X.dwg

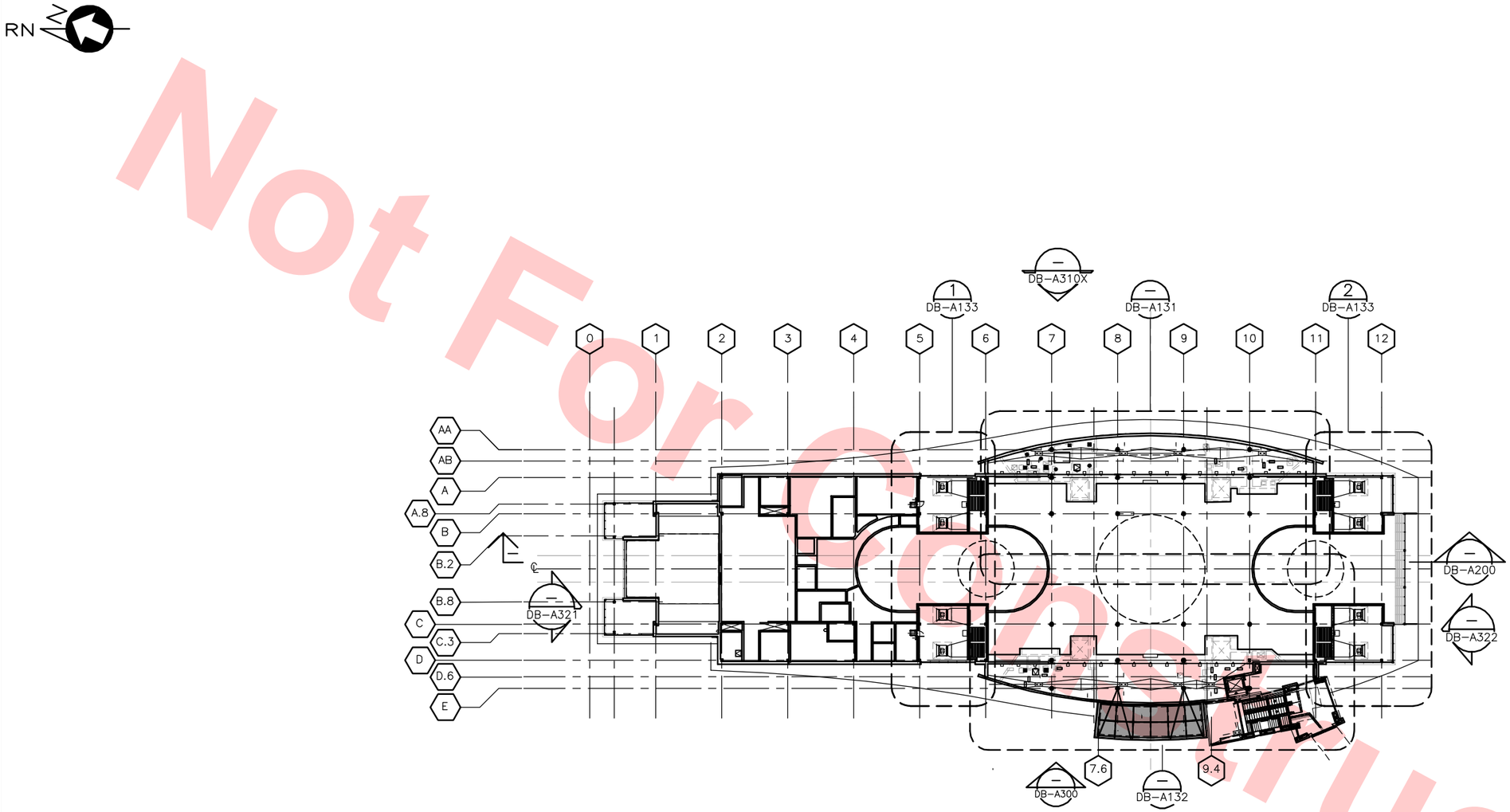

KEY PLAN—MEZZANINE LEVEL

SCALE: 1/32"=1'-0"

Santa Clara Valley Transportation Authority

____NO EXCEPTIONS TAKEN (NET)
____MAKE CORRECTIONS NOTED (MCN)
____AMEND AND RESUBMIT (A/R)

Any action shown above is subject to the terms of the contract and does not relieve the Contractor of any of its obligations under the contract, including design and detailing.

Contract No.: DB11002F

By: _____ Date: _____

32' 0' 32' 64'

GRAPHIC SCALE

Not For Construction

REV	DATE	BY	SUB	APP	DESCRIPTION
0	20130710				READINESS FOR CONSTRUCTION

DESIGNED BY S. DEBNATH
DRAWN BY R. COLLADO
CHECKED BY E. BALLADA
IN CHARGE R. BARLAAN
DATE 20130710

LICENSED ARCHITECT SURESH DEBNATH No. C21523 STATE OF CALIFORNIA

Skanska Shimmick Herzog
1436 California Circle
Milpitas, California 95035
A Joint Venture

Anil Verma Associates, Inc.
1970 Broadway, Suite 525, Oakland, CA 94612
Phone: (510) 835-2537 Fax: (510) 835-2339

Lockwood, Andrews & Newnam, Inc. A LEO A DALY COMPANY
T·Y·LIN INTERNATIONAL

SUBMITTED _____
APPROVED _____

VTA BART SILICON VALLEY
BART SILICON VALLEY BERRYESSA EXTENSION

LINE, TRACK, STATIONS AND SYSTEMS
DESIGN UNIT 023
MILPITAS STATION

KEY PLAN
MEZZANINE LEVEL

CADD FILENAME C700-S-DB-A130.dwg
SIZE D | SCALE 1/32"=1'-0"
CONTRACT NO. C700 | REV. 0
AREA CODE DB | SHEET NO. A130 | PAGE NO. 0352

JosephG Jun 26, 2013 - 1:29pm G:\Current Projects\VTA-Berryessa Extension Project\Station - Milpitas\CAD\Drawings Out\13-0710 C700 Milpitas Station - RFC Submit\C700-S-DB-A130.dwg

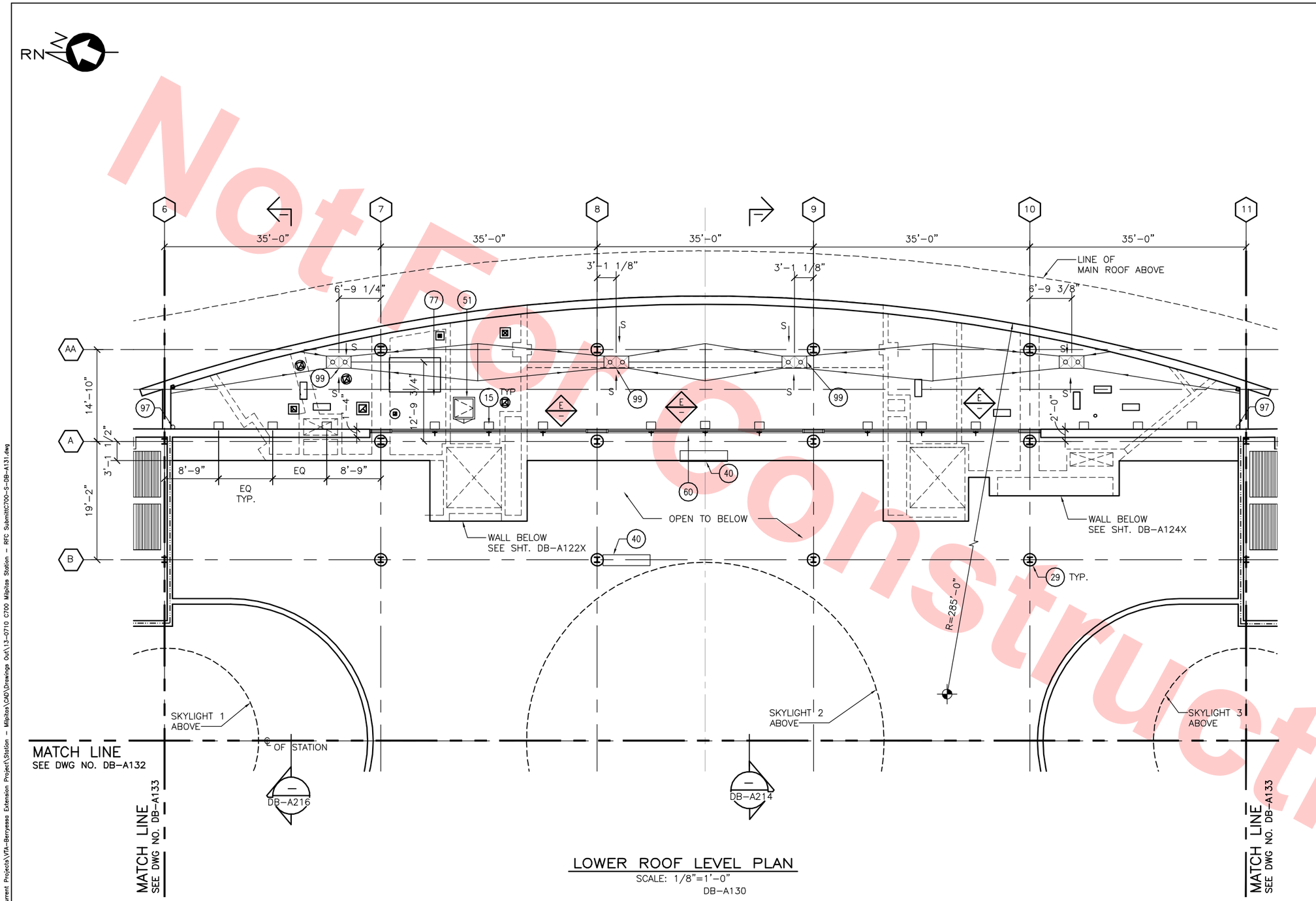

LOWER ROOF LEVEL PLAN
SCALE: 1/8"=1'-0"
DB-A130

KEY NOTES

- (15) LIGHT FIXTURE
- (29) STRUCTURAL COLUMN
- (40) TRAIN INFORMATION MONITOR
- (51) ACCESS HATCH
- (60) FRAMELESS GLASS WALL SYSTEM TYPE 1
- (77) BUILT-UP ROOFING
- (97) DOWNSPOUT
- (99) ROOF DRAIN AND OVERFLOW DRAIN

Santa Clara Valley Transportation Authority

____NO EXCEPTIONS TAKEN (NET)
____MAKE CORRECTIONS NOTED (MCN)
____AMEND AND RESUBMIT (A/R)

Any action shown above is subject to the terms of the contract and does not relieve the Contractor of any of its obligations under the contract, including design and detailing.

Contract No.: DB11002F

By: _____ Date: _____

8' 0' 8' 16'
GRAPHIC SCALE

KEY PLAN

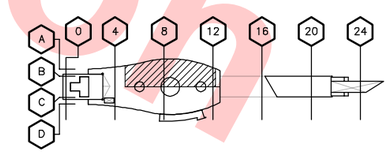

REV	DATE	BY	SUB	APP	DESCRIPTION
0	20130710				READINESS FOR CONSTRUCTION

DESIGNED BY S. DEBNATH
DRAWN BY R. COLLADO
CHECKED BY E. BALLADA
IN CHARGE R. BARLAAN
DATE 20130710

LICENSED ARCHITECT SOMESH DEBNATH No. C21523 STATE OF CALIFORNIA

Skanska Shimmick Herzog
1436 California Circle
Milpitas, California 95035
A Joint Venture

Anil Verma Associates, Inc.
1970 Broadway, Suite 535
Oakland, CA 94612
Phone: (510) 835-2537 Fax: (510) 835-2339
SUBMITTED

Lockwood, Andrews & Newnam, Inc. A LEO A DALY COMPANY
T·Y·LIN INTERNATIONAL
APPROVED

VTA BART SILICON VALLEY
BART SILICON VALLEY BERRYESSA EXTENSION

LINE, TRACK, STATIONS AND SYSTEMS
DESIGN UNIT 023
MILPITAS STATION

LOWER ROOF LEVEL PLAN
SHEET 1 OF 2

CADD FILENAME C700-S-DB-A131.dwg
SIZE D | SCALE 1/8"=1'-0"
CONTRACT NO. C700 | REV. 0
AREA CODE DB | SHEET NO. A131 | PAGE NO. 0353

JosephG Jun 26, 2013 - 1:30pm G:\Current Projects\VTA-Berryessa Extension Project\Station - Milpitas\CAD\Drawings Out\13-0710 C700 Milpitas Station - RFC Submit\C700-S-DB-A131.dwg

Not For Construction

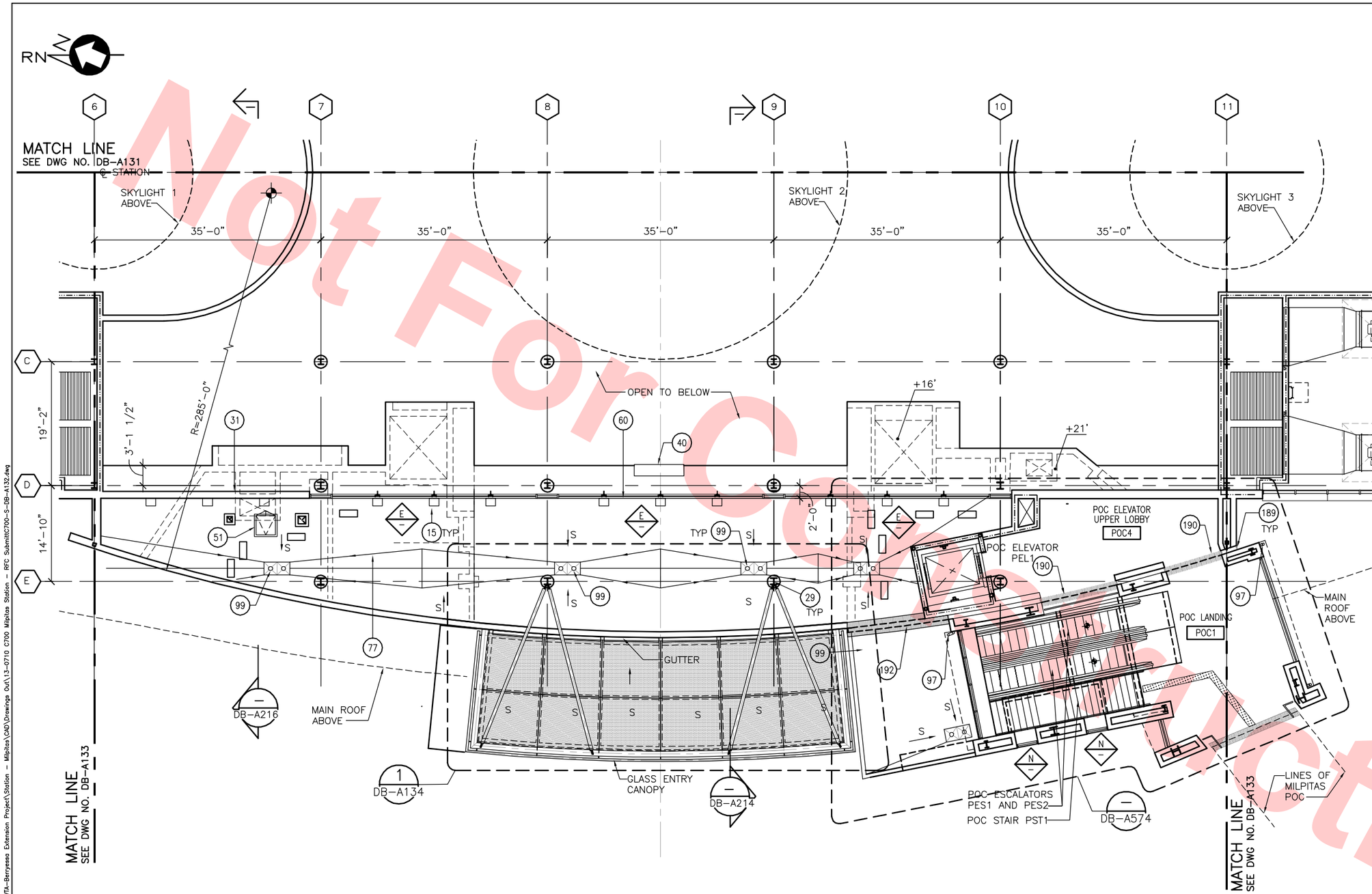

LOWER ROOF LEVEL PLAN

SCALE: 1/8"=1'-0"

DB-A130

NOTE:

FOR MILPITAS POC, REFER TO MONTAGUE LRT AND MILPITAS POC DRAWINGS

KEY NOTES

- (15) LIGHT FIXTURE
- (29) STRUCTURAL COLUMN
- (31) STRUCTURAL MEMBER
- (40) TRAIN INFORMATION MONITOR
- (51) ACCESS HATCH
- (60) FRAMELESS GLASS WALL SYSTEM TYPE 1
- (77) BUILT-UP ROOFING
- (97) DOWNSPOUT
- (99) ROOF DRAIN AND OVERFLOW DRAIN
- (189) 8" WALL EXPANSION JOINT
- (190) 8" FLOOR EXPANSION JOINT
- (192) 8" ROOF EXPANSION JOINT

Santa Clara Valley Transportation Authority

____NO EXCEPTIONS TAKEN (NET)
____MAKE CORRECTIONS NOTED (MCN)
____AMEND AND RESUBMIT (A/R)

Any action shown above is subject to the terms of the contract and does not relieve the Contractor of any of its obligations under the contract, including design and detailing.

Contract No.: DB11002F

By: _____ **Date:** _____

8' 0' 8' 16'

GRAPHIC SCALE

KEY PLAN

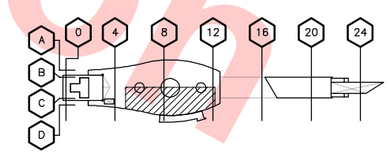

Not For Construction

REV	DATE	BY	SUB	APP	DESCRIPTION
0	20130710				READINESS FOR CONSTRUCTION

DESIGNED BY S. DEBNATH
DRAWN BY R. COLLADO
CHECKED BY E. BALLADA
IN CHARGE R. BARLAAN
DATE 20130710

LICENSED ARCHITECT SOMESH DEBNATH No. C21523 STATE OF CALIFORNIA

Skanska Shimmick Herzog
1436 California Circle
Milpitas, California 95035
A Joint Venture

Anil Verma Associates, Inc.
1970 Broadway, Suite 225, Oakland, CA 94612
Phone: (510) 835-2537 Fax: (510) 835-2339

Lockwood, Andrews & Newnam, Inc. A LED A BALY COMPANY

T·Y·LIN INTERNATIONAL

SUBMITTED _____ APPROVED _____

VTA BART SILICON VALLEY

BART SILICON VALLEY BERRYESSA EXTENSION

LINE, TRACK, STATIONS AND SYSTEMS
DESIGN UNIT 023
MILPITAS STATION

LOWER ROOF LEVEL PLAN
SHEET 2 OF 2

CADD FILENAME C700-S-DB-A132.dwg
SIZE D | SCALE 1/8"=1'-0"
CONTRACT NO. C700 | REV. 0
AREA CODE DB | SHEET NO. A132 | PAGE NO. 0354

JosephG Jun 26, 2013 - 1:30pm G:\Current Projects\VTA-Berryessa Extension Project\Station - Milpitas\CAD\Drawings Out\13-0710 C700 Milpitas Station - RFC Submit\C700-S-DB-A132.dwg

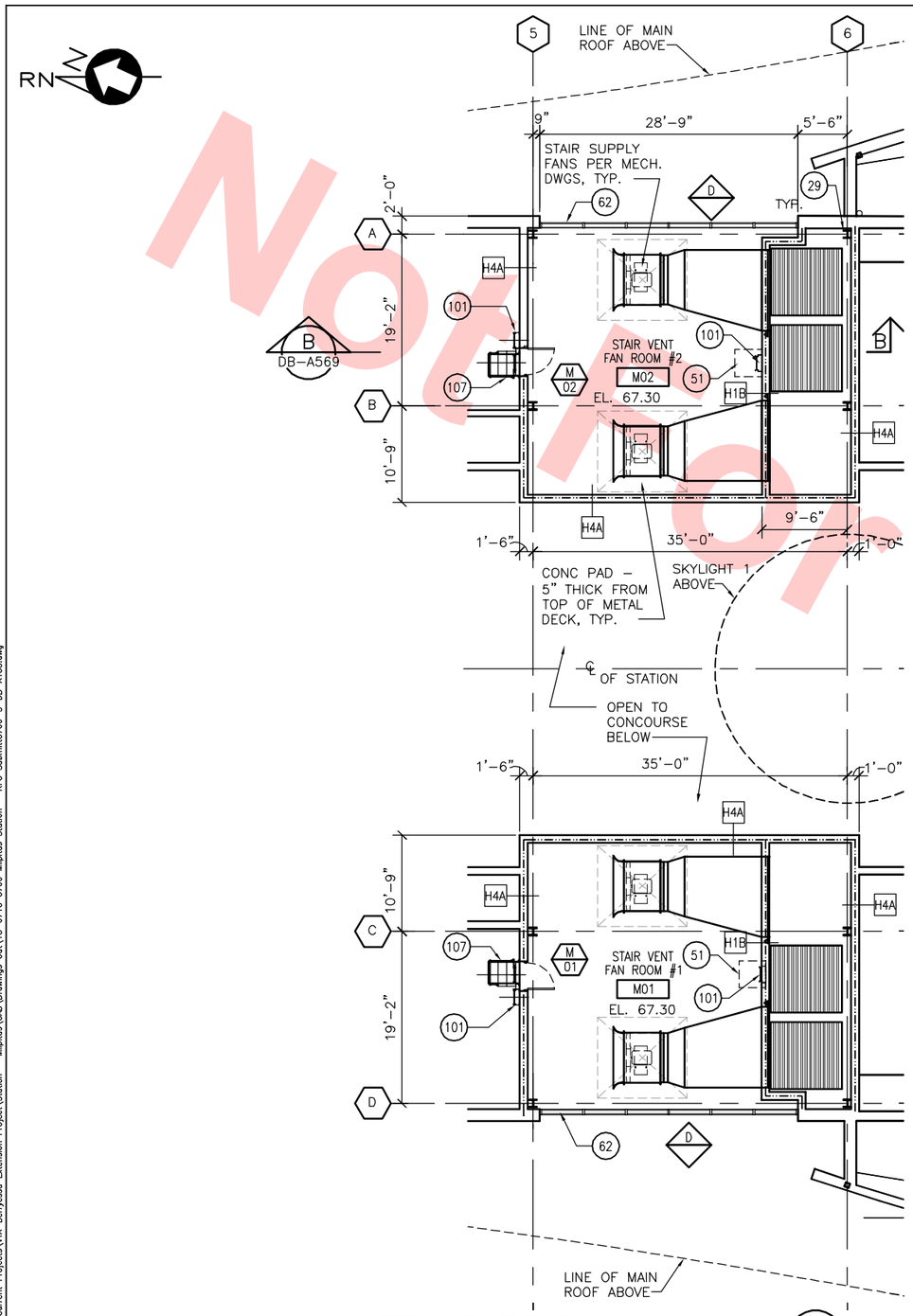

MEZZANINE LEVEL PLAN 1 DB-A133 DB-A130
SCALE: 1/8" = 1'-0"

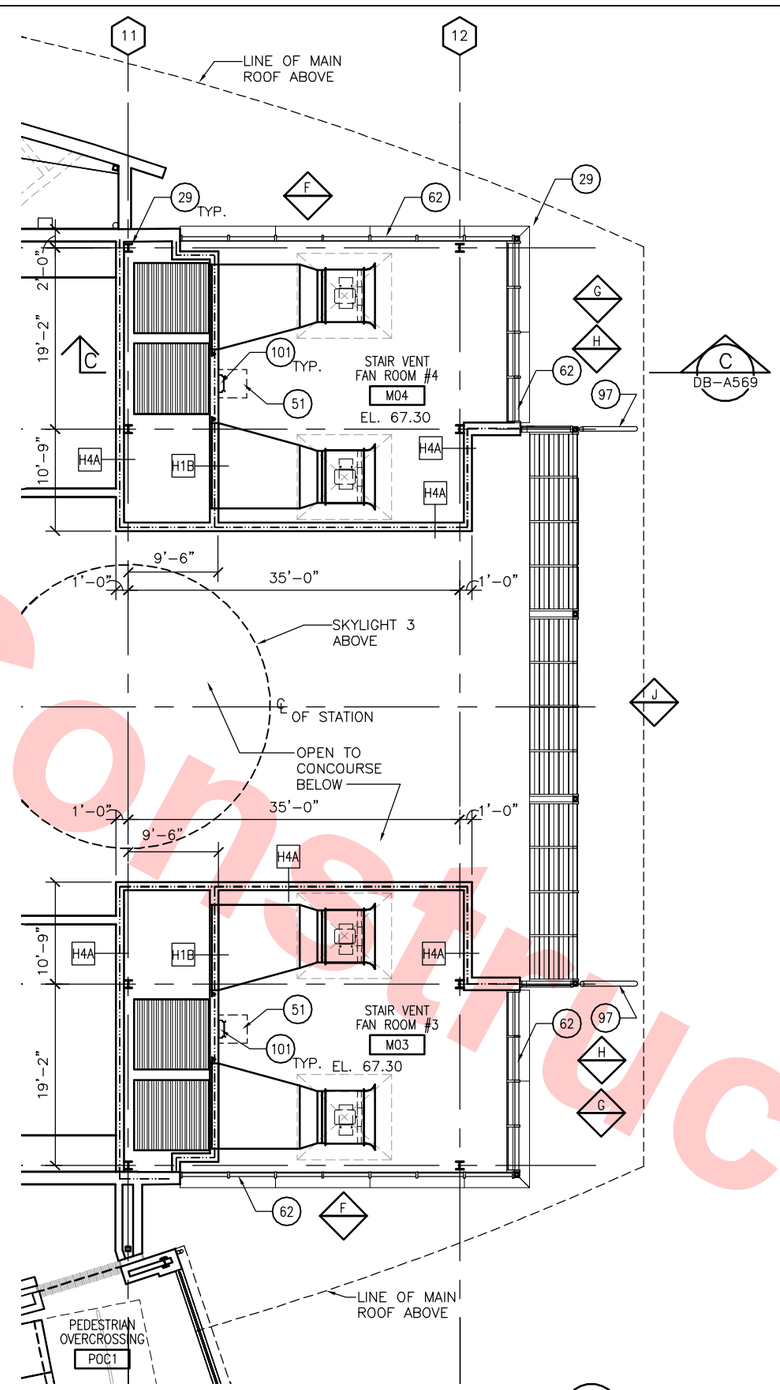

MEZZANINE LEVEL PLAN 2 DB-A133 DB-A130
SCALE: 1/8" = 1'-0"

KEY NOTES

- 29 STRUCTURAL COLUMN
- 51 ACCESS HATCH ABOVE
- 62 LOUVER
- 97 DOWNSPOUT
- 101 FIXED LADDER, SEE DETAIL 10/DB-A613
- 107 STAIR PLATFORM, SEE DETAIL 10/DB-A613

Santa Clara Valley Transportation Authority

____NO EXCEPTIONS TAKEN (NET)
____MAKE CORRECTIONS NOTED (MCN)
____AMEND AND RESUBMIT (A/R)

Any action shown above is subject to the terms of the contract and does not relieve the Contractor of any of its obligations under the contract, including design and detailing.

Contract No.: DB11002F

By: _____ **Date:** _____

8' 0' 8' 16'
GRAPHIC SCALE

KEY PLAN

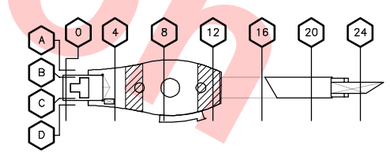

Not for Construction

REV	DATE	BY	SUB	APP	DESCRIPTION
0	20130710				READINESS FOR CONSTRUCTION

DESIGNED BY S. DEBNATH
DRAWN BY R. COLLADO
CHECKED BY E. BALLADA
IN CHARGE R. BARLAAN
DATE 20130710

LICENSED ARCHITECT SOMESH DEBNATH No. C21523 STATE OF CALIFORNIA

Skanska Shimmick Herzog
1436 California Circle Milpitas, California 95035
A Joint Venture

Anil Verma Associates, Inc.
1970 Broadway, Suite 525 Oakland, CA 94612
Phone: (510) 835-2537 Fax: (510) 835-2339
SUBMITTED

Lockwood, Andrews & Newnam, Inc. A LEO A DALY COMPANY
T·Y·LIN INTERNATIONAL
APPROVED

VTA BART SILICON VALLEY
BART SILICON VALLEY BERRYESSA EXTENSION

LINE, TRACK, STATIONS AND SYSTEMS DESIGN UNIT 023
MILPITAS STATION
MEZZANINE LEVEL PLANS

CADD FILENAME C700-S-DB-A133.dwg
SIZE D | SCALE 1/8"=1'-0"
CONTRACT NO. C700 | REV. 0
AREA CODE DB | SHEET NO. A133 | PAGE NO. 0355

JosephG Jun 26, 2013 – 1:31pm G:\Current Projects\VTA-Berryessa Extension Project\Station – Milpitas\CAD\Drawings Out\13-0710 C700 Milpitas Station – RFC Submittal\C700-S-DB-A133.dwg

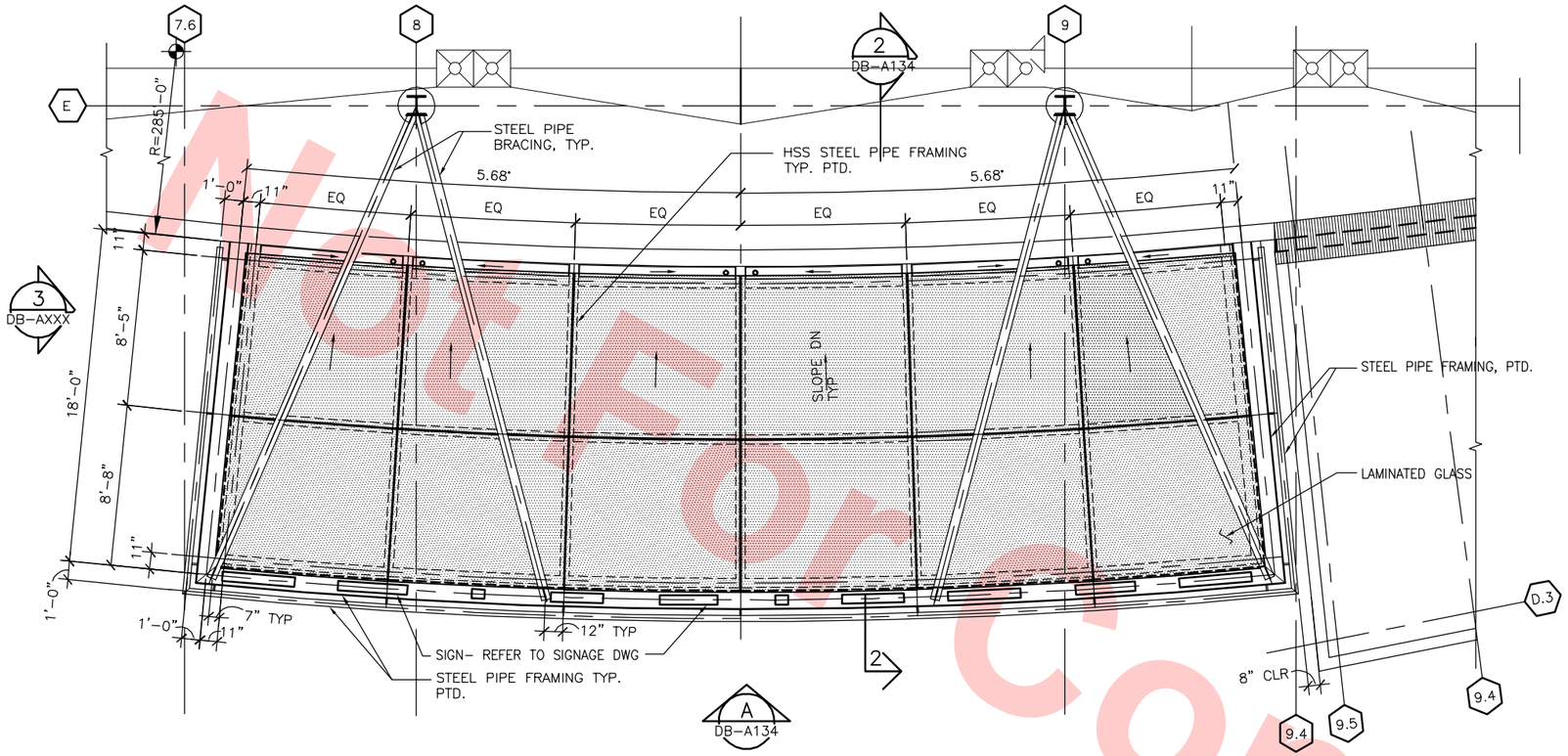

ENLARGED PLAN – CANOPY

SCALE: 1/4" = 1'-0"

1 DB-A134

DB-A132

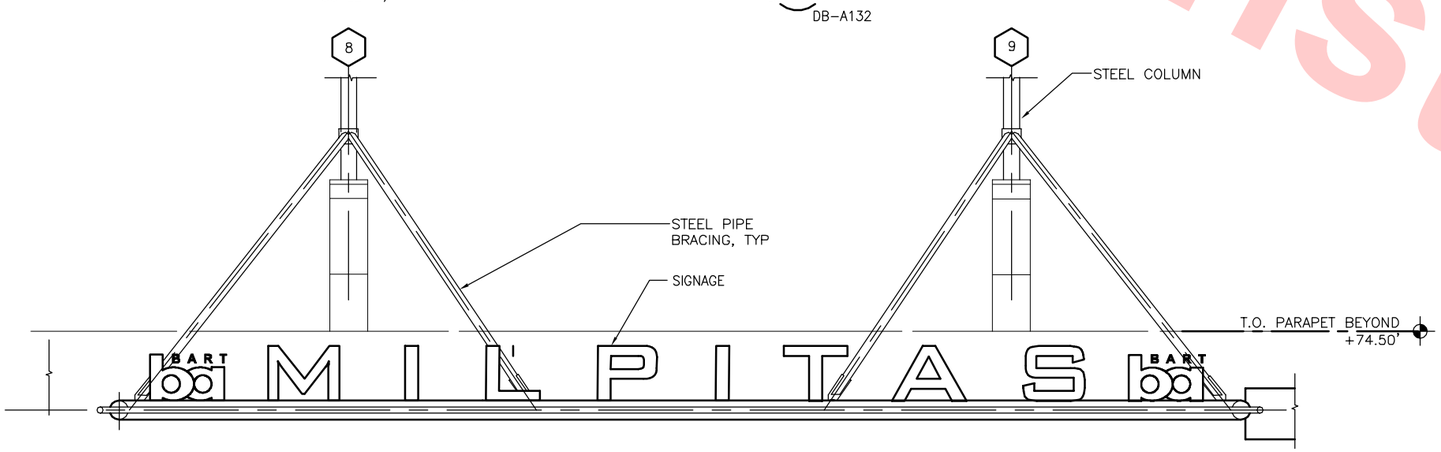

ENLARGED ELEVATION – CANOPY

SCALE: 1/4" = 1'-0"

A DB-A134

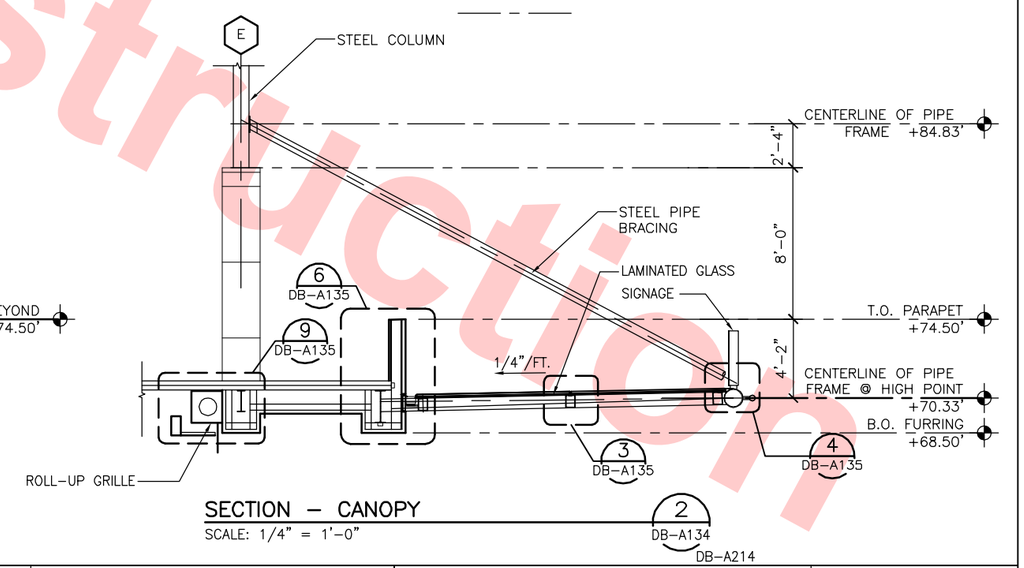

SECTION – CANOPY

SCALE: 1/4" = 1'-0"

2 DB-A134

DB-A214

Santa Clara Valley Transportation Authority

____NO EXCEPTIONS TAKEN (NET)
____MAKE CORRECTIONS NOTED (MCN)
____AMEND AND RESUBMIT (A/R)

Any action shown above is subject to the terms of the contract and does not relieve the Contractor of any of its obligations under the contract, including design and detailing.

Contract No.: DB11002F

By: _____ Date: _____

Not For Construction

REV	DATE	BY	SUB	APP	DESCRIPTION
0	20130710				READINESS FOR CONSTRUCTION

DESIGNED BY S. DEBNATH
DRAWN BY RC / PPB
CHECKED BY E. BALLADA
IN CHARGE R. BARLAAN
DATE 20130710

LICENSED ARCHITECT SOMESH DEBNATH No. C21523 STATE OF CALIFORNIA

Skanska Shimmick Herzog
1436 California Circle
Milpitas, California 95035
A Joint Venture

Anil Verma Associates, Inc.
1970 Broadway, Suite 325, Oakland, CA 94612
Phone: (510) 835-2537 Fax: (510) 835-2339

Lockwood, Andrews & Newnam, Inc. A LED A BALY COMPANY

T·Y·LIN INTERNATIONAL

SUBMITTED

APPROVED

VTA BART SILICON VALLEY

BART SILICON VALLEY BERRYESSA EXTENSION

LINE, TRACK, STATIONS AND SYSTEMS DESIGN UNIT 023
MILPITAS STATION

ENLARGED CANOPY PLAN ELEVATION & SECTION

CADD FILENAME C700-S-DB-A134.dwg
SIZE D | SCALE 1/4"=1'-0"
CONTRACT NO. C700 | REV. 0
AREA CODE DB | SHEET NO. A134 | PAGE NO. 0356

JosephG Jun 26, 2013 – 1:31pm G:\Current Projects\VTA-Berryessa Extension Project\Station – Milpitas\CAD\Drawings Out\13-0710 C700 Milpitas Station – RFC Submit\C700-S-DB-A134.dwg

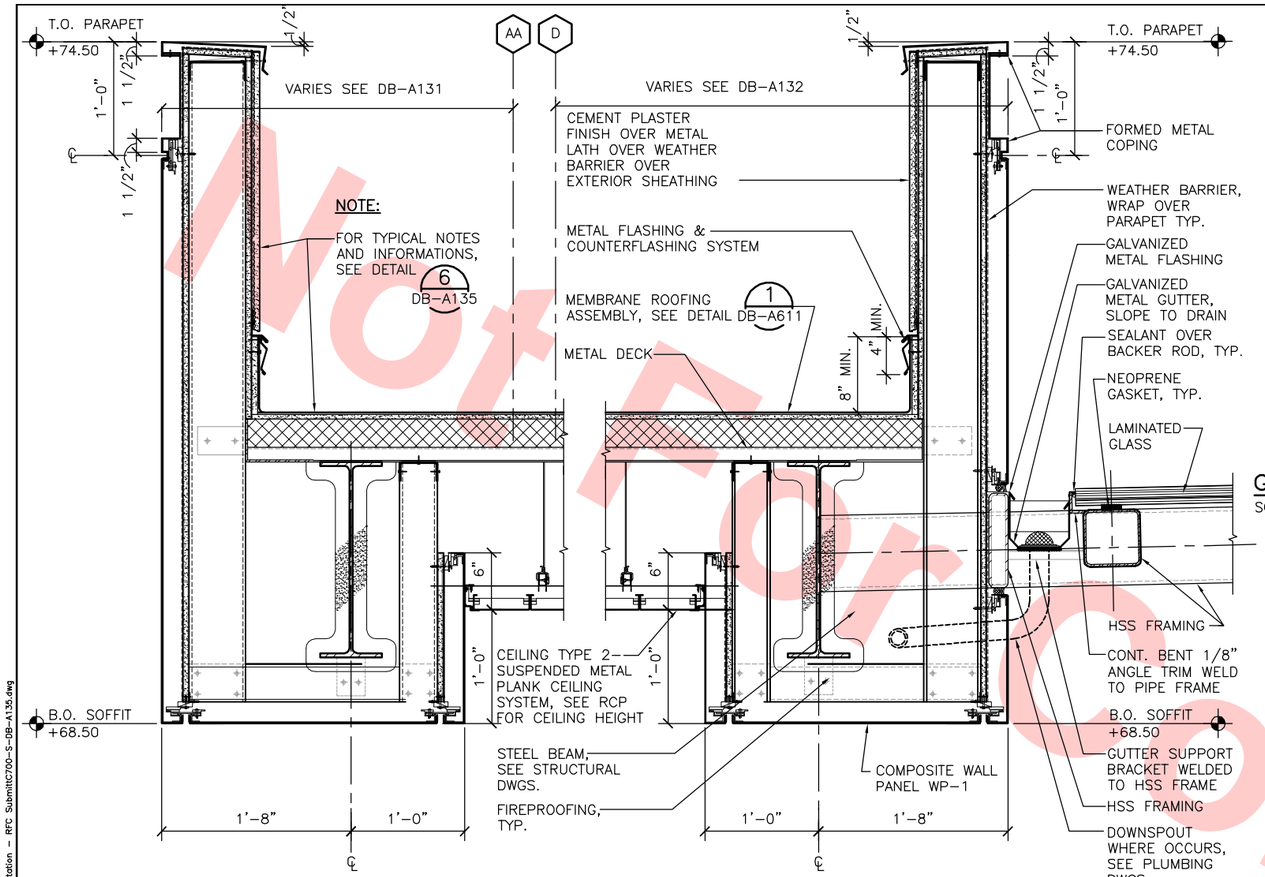

PARAPET DETAIL (5 / DB-A135 — DB-A522)

SCALE: 1 1/2"=1'-0"

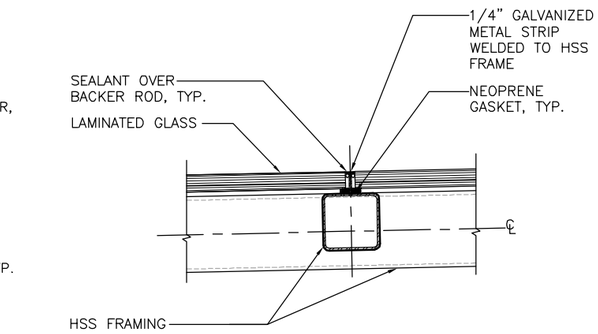

GLASS CANOPY FRAMING (3 / DB-A135 — DB-A134)

SCALE: 1 1/2"=1'-0"

FRAMELESS GLASS WALL SYSTEM TYPE 1 SEE DETAIL 1 DB-A611

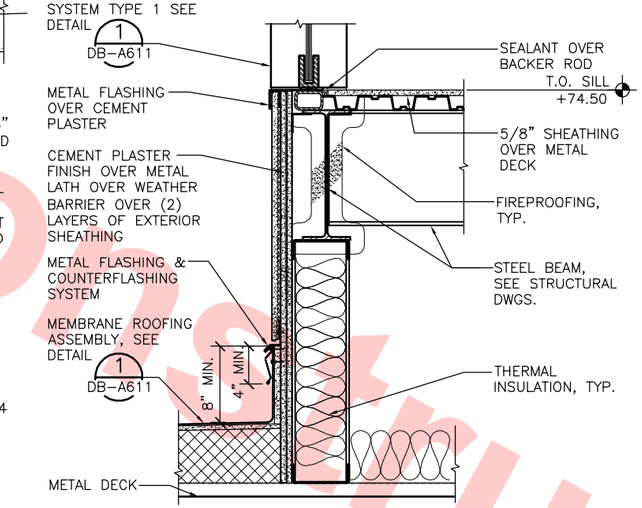

ROOF BASE / SILL DETAIL (7 / DB-A135 — DB-A522)

SCALE: 1 1/2"=1'-0"

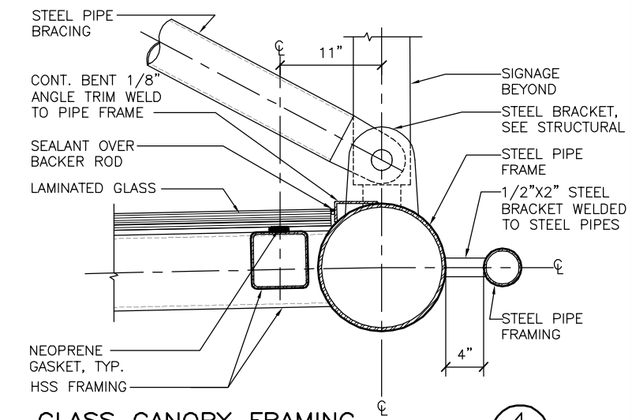

GLASS CANOPY FRAMING (4 / DB-A135 — DB-A134)

SCALE: 1 1/2"=1'-0"

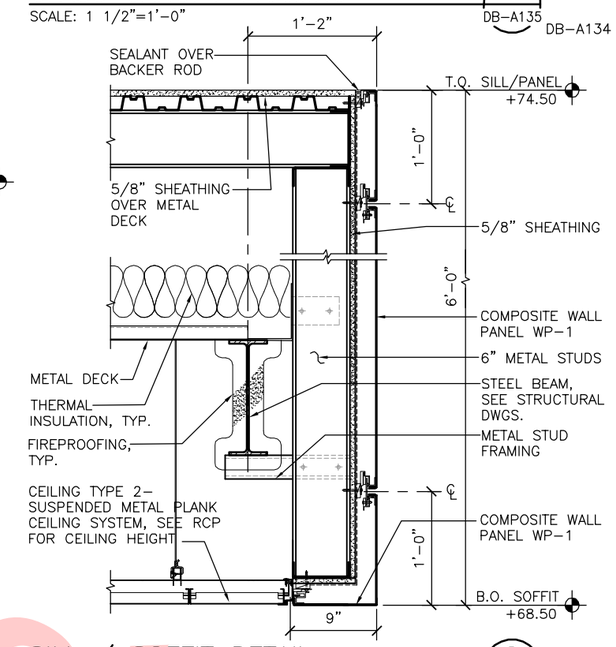

SILL / SOFFIT DETAIL (8 / DB-A135 — DB-A522)

SCALE: 1 1/2"=1'-0"

PARAPET DETAIL @ GLASS CANOPY (6 / DB-A135 — DB-A134)

SCALE: 1 1/2"=1'-0"

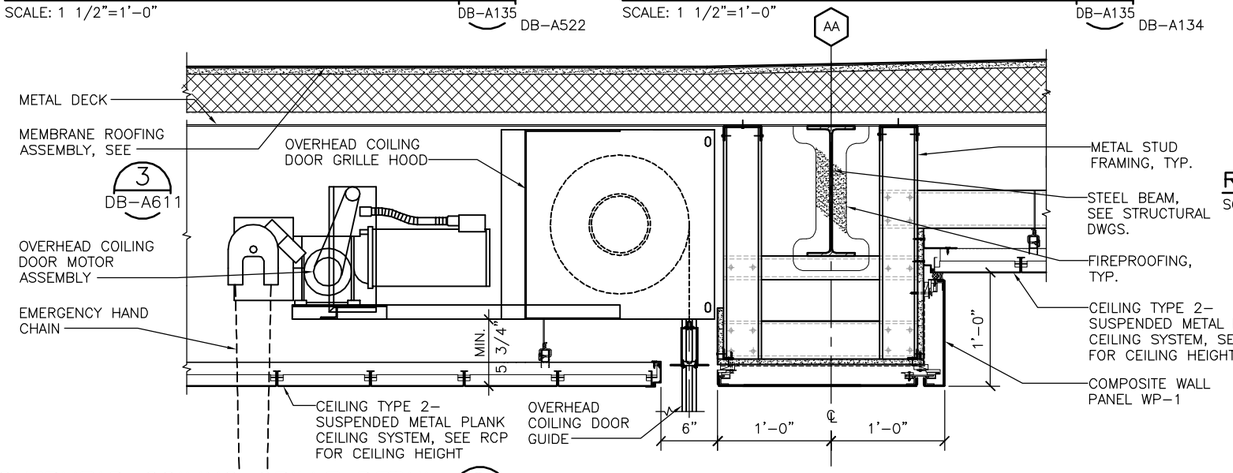

OVERHEAD COILING GRILLE DETAIL (9 / DB-A135 — DB-A134)

SCALE: 1 1/2"=1'-0"

Santa Clara Valley Transportation Authority

____NO EXCEPTIONS TAKEN (NET)
____MAKE CORRECTIONS NOTED (MCN)
____AMEND AND RESUBMIT (A/R)

Any action shown above is subject to the terms of the contract and does not relieve the Contractor of any of its obligations under the contract, including design and detailing.

Contract No.: DB11002F

By: _____ Date: _____

Not For Construction

REV	DATE	BY	SUB	APP	DESCRIPTION
0	20130710				READINESS FOR CONSTRUCTION

DESIGNED BY S. DEBNATH
DRAWN BY P. BALOGO
CHECKED BY E. BALLADA
IN CHARGE R. BARLAAN
DATE 20130710

LICENSED ARCHITECT — DINESH DEBNATH — No. C21523 — STATE OF CALIFORNIA

Skanska Shimmick Herzog
1436 California Circle
Milpitas, California 95035
A Joint Venture

Anil Verma Associates, Inc.
1970 Broadway, Suite 525, Oakland, CA 94612
Phone: (510) 835-2537 Fax: (510) 535-2339
SUBMITTED

Lockwood, Andrews & Newnam, Inc. — A LAN & RALY COMPANY
T·Y·LIN INTERNATIONAL
APPROVED

VTA BART SILICON VALLEY
BART SILICON VALLEY BERRYESSA EXTENSION

LINE, TRACK, STATIONS AND SYSTEMS
DESIGN UNIT 023
MILPITAS STATION

CANOPY DETAILS

CADD FILENAME C700-S-DB-A135.dwg
SIZE D | SCALE 1 1/2"=1'-0"
CONTRACT NO. C700 | REV. 0
AREA CODE DB | SHEET NO. A135 | PAGE NO. 0357

JosephG Jun 26, 2013 - 1:32pm G:\Current Projects\VTA-Berryessa Extension Project\Station - Milpitas\CAD\Drawings Out\13-0710 C700 Milpitas Station - RFC Submit\C700-S-DB-A135.dwg

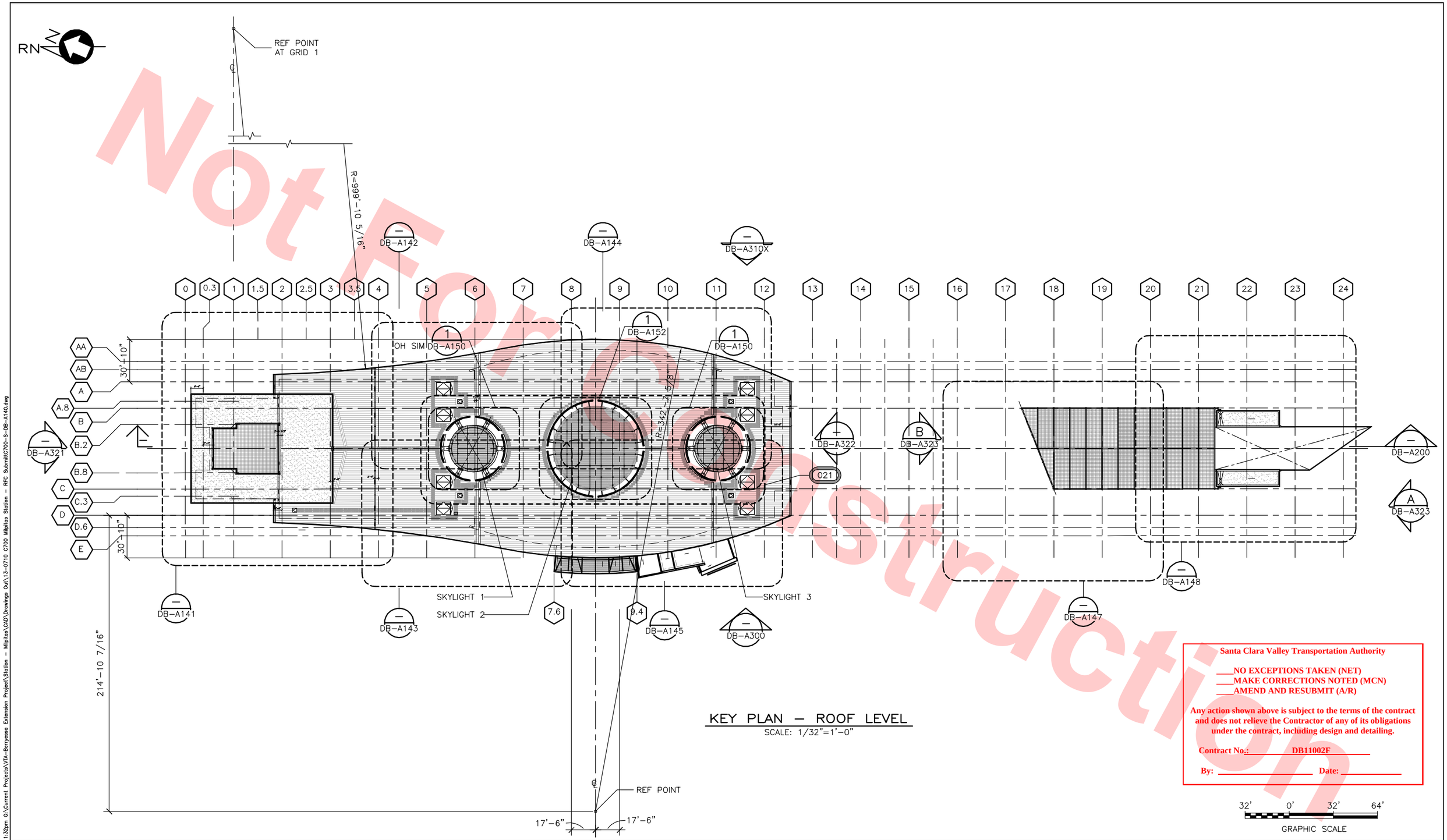

KEY PLAN – ROOF LEVEL

SCALE: 1/32"=1'-0"

Santa Clara Valley Transportation Authority

____NO EXCEPTIONS TAKEN (NET)
____MAKE CORRECTIONS NOTED (MCN)
____AMEND AND RESUBMIT (A/R)

Any action shown above is subject to the terms of the contract and does not relieve the Contractor of any of its obligations under the contract, including design and detailing.

Contract No.: DB11002F

By: _____ Date: _____

Not For Construction

REV	DATE	BY	SUB	APP	DESCRIPTION
0	20130710				READINESS FOR CONSTRUCTION
					REPLACES C700-S-DB-A120, REV. P

DESIGNED BY S. DEBANTH
DRAWN BY R. COLLADO
CHECKED BY E. BALLADA
IN CHARGE R. BARLAAN
DATE 20130710

LICENSED ARCHITECT SURESH DEBANTH No. C21523 STATE OF CALIFORNIA

Skanska Shimmick Herzog
1436 California Circle
Milpitas, California 95035
A Joint Venture

Anil Verma Associates, Inc.
1970 Broadway, Suite 525, Oakland, CA 94612
Phone: (510) 835-2537 Fax: (510) 835-2339
SUBMITTED

Lockwood, Andrews & Newnam, Inc. A LEO A DALY COMPANY
T·Y·LIN INTERNATIONAL
APPROVED

VTA BART SILICON VALLEY
BART SILICON VALLEY BERRYESSA EXTENSION

LINE, TRACK, STATIONS AND SYSTEMS
DESIGN UNIT 023
MILPITAS STATION

KEY PLAN
ROOF LEVEL

CADD FILENAME C700-S-DB-A140.dwg
SIZE D | SCALE 1/32"=1'-0"
CONTRACT NO. C700 | REV. 0
AREA CODE DB | SHEET NO. A140 | PAGE NO. 0358

JosephG Jun 26, 2013 – 1:32pm G:\Current Projects\VTA-Berryessa Extension Project\Station – Milpitas\CAD\Drawings Out\13-0710 C700 Milpitas Station – RFC Submittl\C700-S-DB-A140.dwg

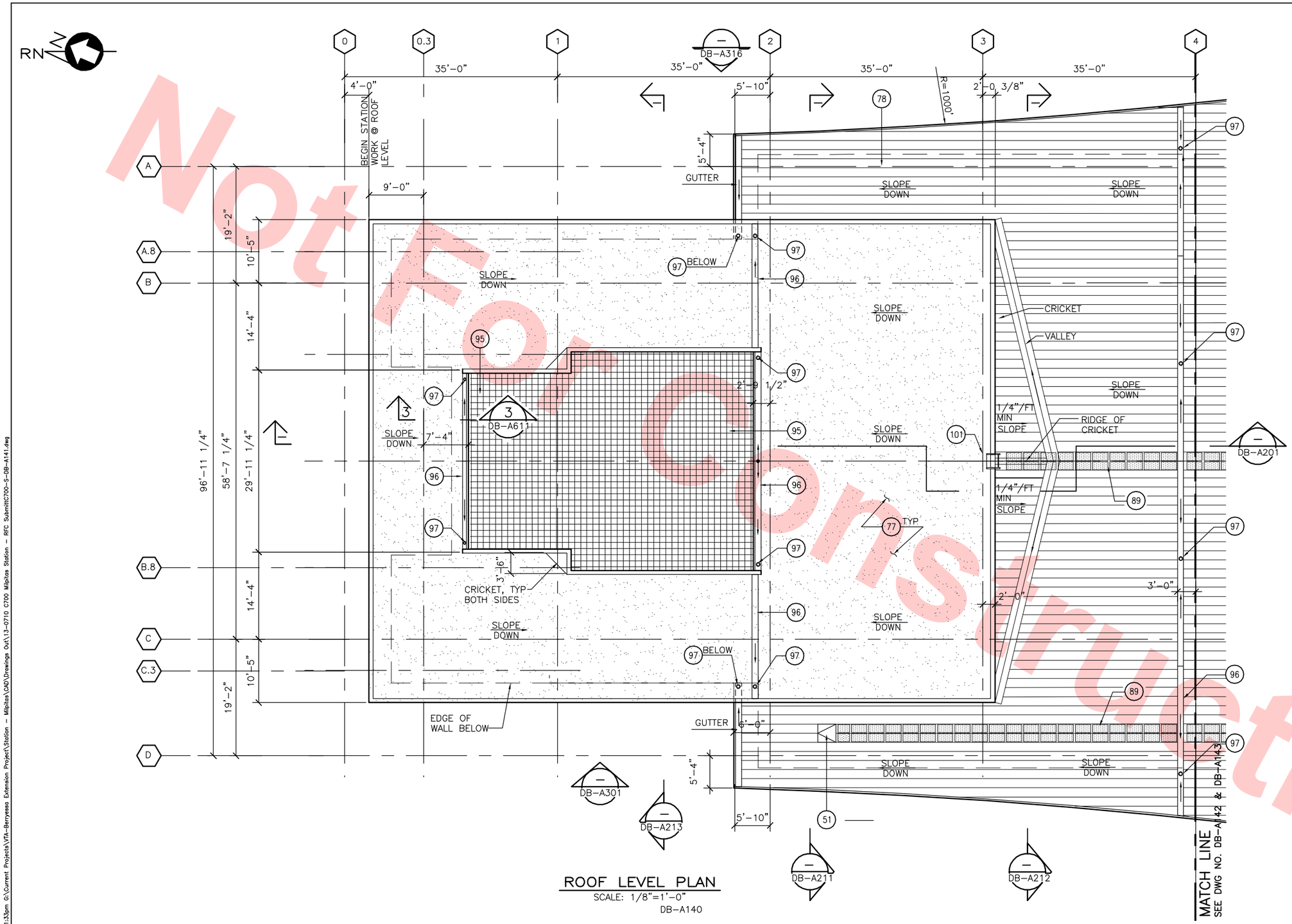

ROOF LEVEL PLAN
SCALE: 1/8"=1'-0"
DB-A140

KEY NOTES

- (51) ACCESS HATCH, SEE DETAIL 8/DB-A599
- (77) MEMBRANE ROOFING
- (78) METAL ROOFING
- (89) ROOF WALK PAD
- (95) BIRD/SAFETY NETTING
- (96) GUTTER
- (97) DOWNSPOUT/RAINWATER LEADER
- (101) FIXED LADDER

Santa Clara Valley Transportation Authority

____NO EXCEPTIONS TAKEN (NET)
____MAKE CORRECTIONS NOTED (MCN)
____AMEND AND RESUBMIT (A/R)

Any action shown above is subject to the terms of the contract and does not relieve the Contractor of any of its obligations under the contract, including design and detailing.

Contract No.: DB11002F

By: _____ **Date:** _____

8' 0' 8' 16'
GRAPHIC SCALE

KEY ROOF PLAN

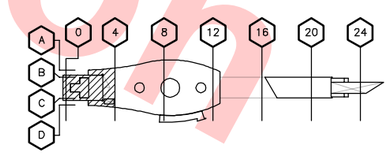

Not For Construction

REV	DATE	BY	SUB	APP	DESCRIPTION
0	20130710				READINESS FOR CONSTRUCTION
					REPLACES C700-S-DB-A121, REV. Q

DESIGNED BY S. DEBNATH
DRAWN BY R. COLLADO
CHECKED BY E. BALLADA
IN CHARGE R. BARLAAN
DATE 20130710

LICENSED ARCHITECT SOMESH DEBNATH No. C21523 STATE OF CALIFORNIA

Skanska Shimmick Herzog
1436 California Circle
Milpitas, California 95035
A Joint Venture

Anil Verma Associates, Inc.
1970 Broadway, Suite 555
Oakland, CA 94612
Phone: (510) 835-2537 Fax: (510) 535-2339
SUBMITTED

Lockwood, Andrews & Newnam, Inc. A LEE & RUTH COMPANY
T-Y-LIN INTERNATIONAL
APPROVED

VTA BART SILICON VALLEY
BART SILICON VALLEY BERRYESSA EXTENSION

LINE, TRACK, STATIONS AND SYSTEMS
DESIGN UNIT 023
MILPITAS STATION

ROOF LEVEL PLAN
SHEET 1 OF 7

CADD FILENAME C700-S-DB-A141.dwg
SIZE D | SCALE 1/8"=1'-0"
CONTRACT NO. C700 | REV. 0
AREA CODE DB | SHEET NO. A141 | PAGE NO. 0359

JosephG Jun 26, 2013 - 1:33pm G:\Current Projects\VTA-Berryessa Extension Project\Station - Milpitas\CAD\Drawings Out\13-0710 C700 Milpitas Station - RFC Submit\C700-S-DB-A141.dwg

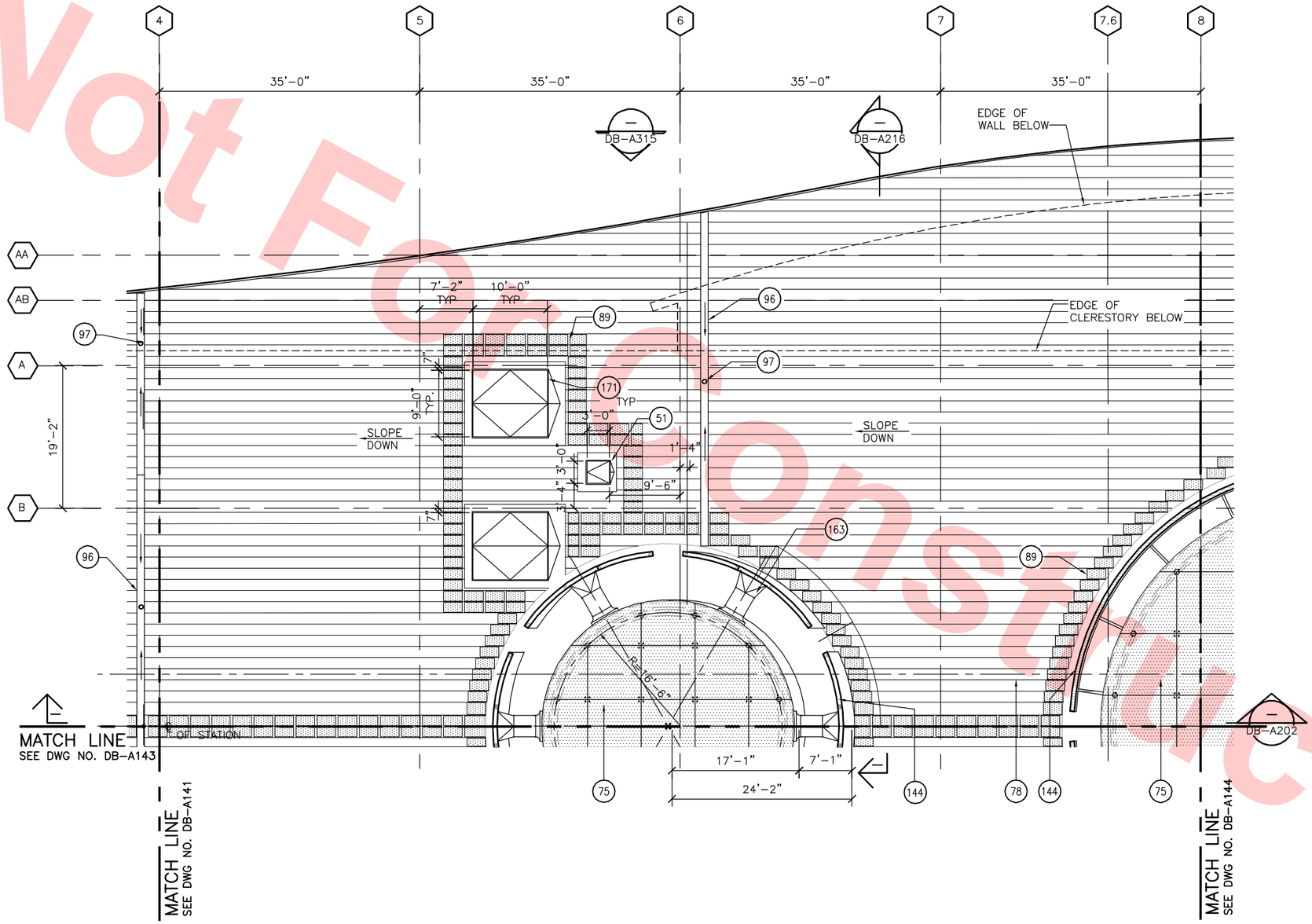

ROOF LEVEL PLAN

SCALE: 1/8"=1'-0"

DB-A140

KEY NOTES

- (51) ACCESS HATCH, SEE DETAIL 8/DB-A599
- (75) HORIZONTAL STRUCTURAL POINT SUPPORTED GLASS SKYLIGHT SYSTEM
- (78) METAL ROOFING
- (89) ROOF WALK PAD
- (96) GUTTER
- (97) DOWNSPOUT
- (144) WIND FENCE
- (163) SKYLIGHT SMOKE EVACUATION FAN
- (171) EQUIPMENT ACCESS ROOF HATCH, SEE DWG NO 4/DB-A610

Santa Clara Valley Transportation Authority

____NO EXCEPTIONS TAKEN (NET)
____MAKE CORRECTIONS NOTED (MCN)
____AMEND AND RESUBMIT (A/R)

Any action shown above is subject to the terms of the contract and does not relieve the Contractor of any of its obligations under the contract, including design and detailing.

Contract No.: DB11002F

By: _____ **Date:** _____

8' 0' 8' 16'

GRAPHIC SCALE

KEY ROOF PLAN

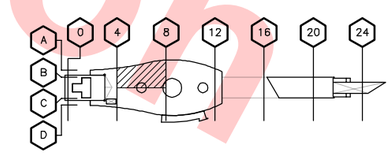

Not For Construction

REV	DATE	BY	SUB	APP	DESCRIPTION
0	20130710				READINESS FOR CONSTRUCTION
					REPLACES C700-S-DB-A122, REV. R

DESIGNED BY S. DEBNATH
DRAWN BY R. COLLADO
CHECKED BY E. BALLADA
IN CHARGE R. BARLAAN
DATE 20130710

LICENSED ARCHITECT SOMESH DEBNATH No. C21523 STATE OF CALIFORNIA

Skanska Shimmick Herzog
1436 California Circle
Milpitas, California 95035
A Joint Venture

Anil Verma Associates, Inc.
1970 Broadway, Suite 325
Oakland, CA 94612
Phone: (510) 835-2537 Fax: (510) 535-2339

SUBMITTED _____

Lockwood, Andrews & Newnam, Inc. A LEO A DALY COMPANY
T·Y·LIN INTERNATIONAL

APPROVED _____

VTA BART SILICON VALLEY

BART SILICON VALLEY BERRYESSA EXTENSION

LINE, TRACK, STATIONS AND SYSTEMS
DESIGN UNIT 023
MILPITAS STATION

ROOF LEVEL PLAN
SHEET 2 OF 7

CADD FILENAME C700-S-DB-A142.dwg
SIZE D | SCALE 1/8"=1'-0"
CONTRACT NO. C700 | REV. 0
AREA CODE DB | SHEET NO. A142 | PAGE NO. 0360

JosephG Jun 26, 2013 - 1:33pm G:\Current Projects\VTA-Berryessa Extension Project\Station - Milpitas\CAD\Drawings Out\13-0710 C700 Milpitas Station - RFC Submit\C700-S-DB-A142.dwg

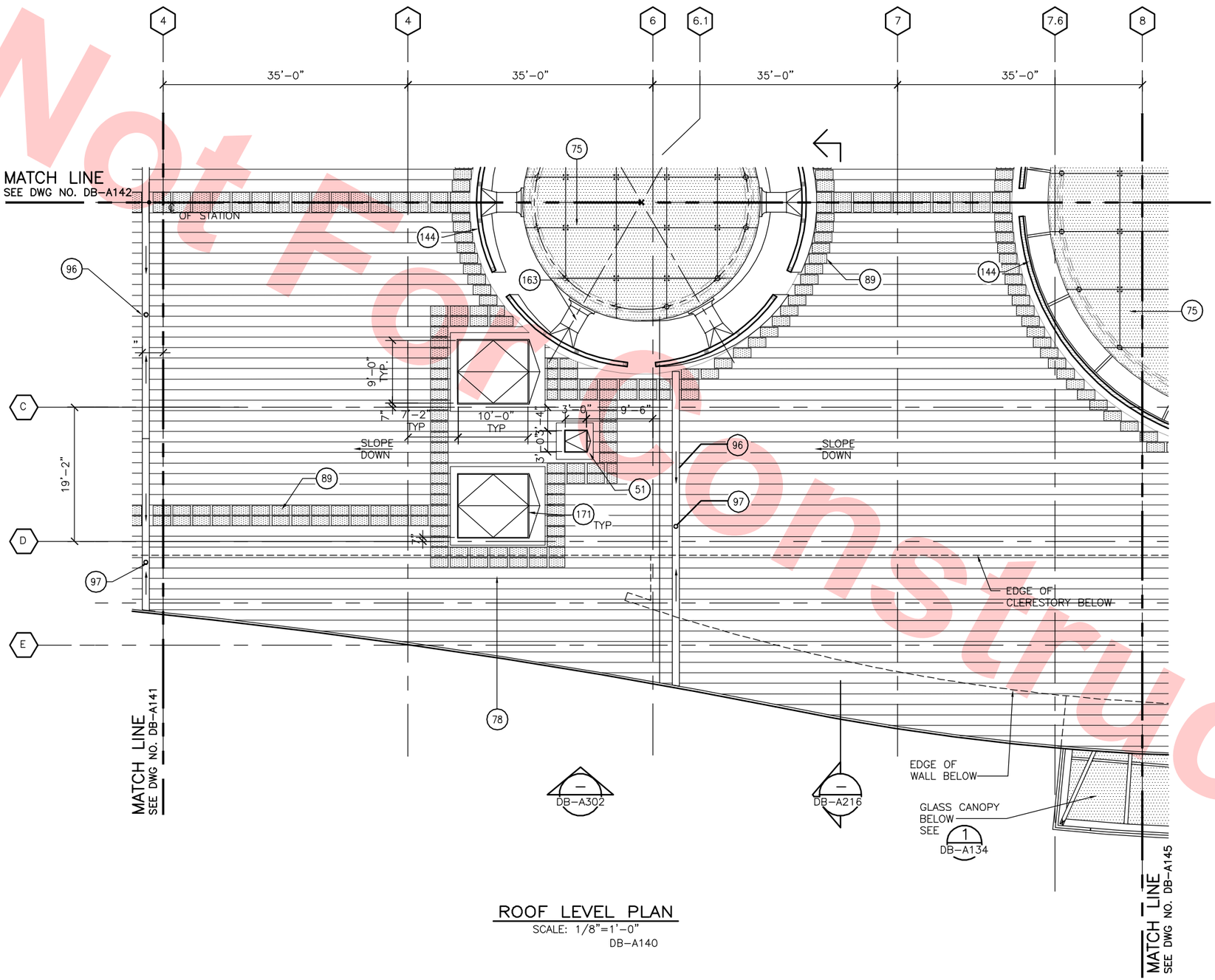

ROOF LEVEL PLAN
SCALE: 1/8"=1'-0"
DB-A140

Not For Construction

KEY NOTES

- (51) ACCESS HATCH, SEE DETAIL 8/DB-A599
- (75) HORIZONTAL STRUCTURAL POINT SUPPORTED GLASS SKYLIGHT SYSTEM
- (78) METAL ROOFING
- (89) ROOF WALK PAD
- (96) GUTTER
- (97) DOWNSPOUT
- (144) WIND FENCE
- (163) SKYLIGHT SMOKE EVACUATION FAN
- (171) EQUIPMENT ACCESS ROOF HATCH, SEE DWG NO. 4/DB-A610

NOTE

FOR DIMENSIONS OF ROOF GEOMETRY, SEE DWG DB-A140, SIM

Santa Clara Valley Transportation Authority

____NO EXCEPTIONS TAKEN (NET)
____MAKE CORRECTIONS NOTED (MCN)
____AMEND AND RESUBMIT (A/R)

Any action shown above is subject to the terms of the contract and does not relieve the Contractor of any of its obligations under the contract, including design and detailing.

Contract No.: DB11002F

By: _____ Date: _____

8' 0' 8' 16'
GRAPHIC SCALE

KEY ROOF PLAN

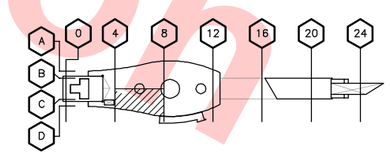

REV	DATE	BY	SUB	APP	DESCRIPTION
0	20130710				READINESS FOR CONSTRUCTION
					REPLACES C700-S-DB-A123, REV. R

DESIGNED BY S. DEBNATH
DRAWN BY R. COLLADO
CHECKED BY E. BALLADA
IN CHARGE R. BARLAAN
DATE 20130710

LICENSED ARCHITECT SANJEEV DEBNATH No. C21523 STATE OF CALIFORNIA

Skanska Shimmick Herzog
1436 California Circle
Milpitas, California 95035
A Joint Venture

Anil Verma Associates, Inc.
1970 Broadway, Suite 525 Oakland, CA 94612
Phone: (510) 835-2537 Fax: (510) 835-2339

Lockwood, Andrews & Newnam, Inc. A CH2M HILL COMPANY
T·Y·LIN INTERNATIONAL

SUBMITTED _____
APPROVED _____

VTA BART SILICON VALLEY
BART SILICON VALLEY BERRYESSA EXTENSION

LINE, TRACK, STATIONS AND SYSTEMS
DESIGN UNIT 023
MILPITAS STATION

ROOF LEVEL PLAN
SHEET 3 OF 7

CADD FILENAME C700-S-DB-A143.dwg
SIZE D | SCALE 1/8"=1'-0"
CONTRACT NO. C700 | REV. 0
AREA CODE DB | SHEET NO. A143 | PAGE NO. 0361

JosephG Jun 26, 2013 – 1:33pm G:\Current Projects\VTA-Berryessa Extension Project\Station – Milpitas\CAD\Drawings Out\13-0710 C700 Milpitas Station – RFC Submit\C700-S-DB-A143.dwg

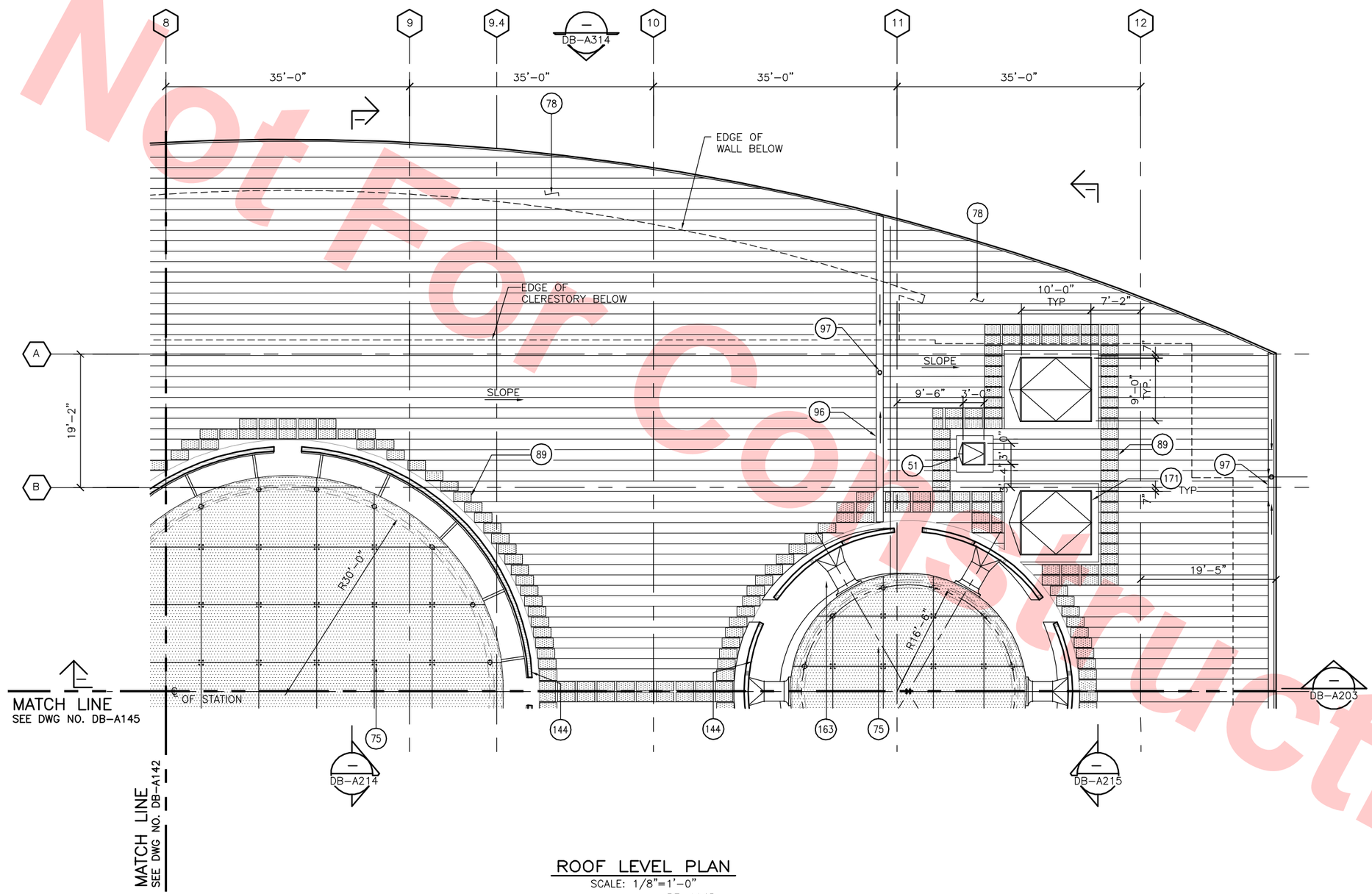

ROOF LEVEL PLAN
SCALE: 1/8"=1'-0"
DB-A140

KEY NOTES

- (51) ACCESS HATCH, SEE DETAIL 8/DB-A599
- (75) HORIZONTAL STRUCTURAL POINT SUPPORTED GLASS SKYLIGHT SYSTEM
- (78) METAL ROOFING
- (89) ROOF WALK PAD
- (96) GUTTER
- (97) DOWNSPOUT
- (144) WIND FENCE
- (163) SKYLIGHT SMOKE EVACUATION FAN
- (171) EQUIPMENT ACCESS ROOF HATCH, SEE DETAIL 4/DB-A610

Santa Clara Valley Transportation Authority

____NO EXCEPTIONS TAKEN (NET)
____MAKE CORRECTIONS NOTED (MCN)
____AMEND AND RESUBMIT (A/R)

Any action shown above is subject to the terms of the contract and does not relieve the Contractor of any of its obligations under the contract, including design and detailing.

Contract No.: DB11002F

By: _____ Date: _____

8' 0' 8' 16'
GRAPHIC SCALE

KEY ROOF PLAN

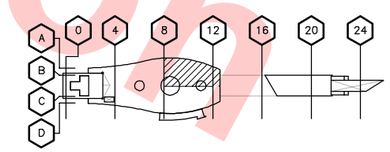

Not For Construction

REV	DATE	BY	SUB	APP	DESCRIPTION
0	20130710				READINESS FOR CONSTRUCTION

DESIGNED BY S. DEBNATH
DRAWN BY R. COLLADO
CHECKED BY E. BALLADA
IN CHARGE R. BARLAAN
DATE 20130710

LICENSED ARCHITECT SOMESH DEBNATH No. C21523 STATE OF CALIFORNIA

Skanska Shimmick Herzog
1436 California Circle
Milpitas, California 95035
A Joint Venture

Anil Verma Associates, Inc.
1970 Broadway, Suite 525 Oakland, CA 94612
Phone: (510) 835-2537 Fax: (510) 835-2339
SUBMITTED

Lockwood, Andrews & Newnam, Inc. A LAN & AALV COMPANY
T·Y·LIN INTERNATIONAL
APPROVED

VTA BART SILICON VALLEY
BART SILICON VALLEY BERRYESSA EXTENSION

LINE, TRACK, STATIONS AND SYSTEMS DESIGN UNIT 023
MILPITAS STATION

ROOF LEVEL PLAN
SHEET 4 OF 7

CADD FILENAME C700-S-DB-A144.dwg
SIZE D | SCALE 1/8"=1'-0"
CONTRACT NO. C700 | REV. 0
AREA CODE DB | SHEET NO. A144 | PAGE NO. 0362

JosephG Jun 26, 2013 – 1:34pm G:\Current Projects\VTA-Berryessa Extension Project\Station – Milpitas\CAD\Drawings Out\13-0710 C700 Milpitas Station – RFC Submit\C700-S-DB-A144.dwg

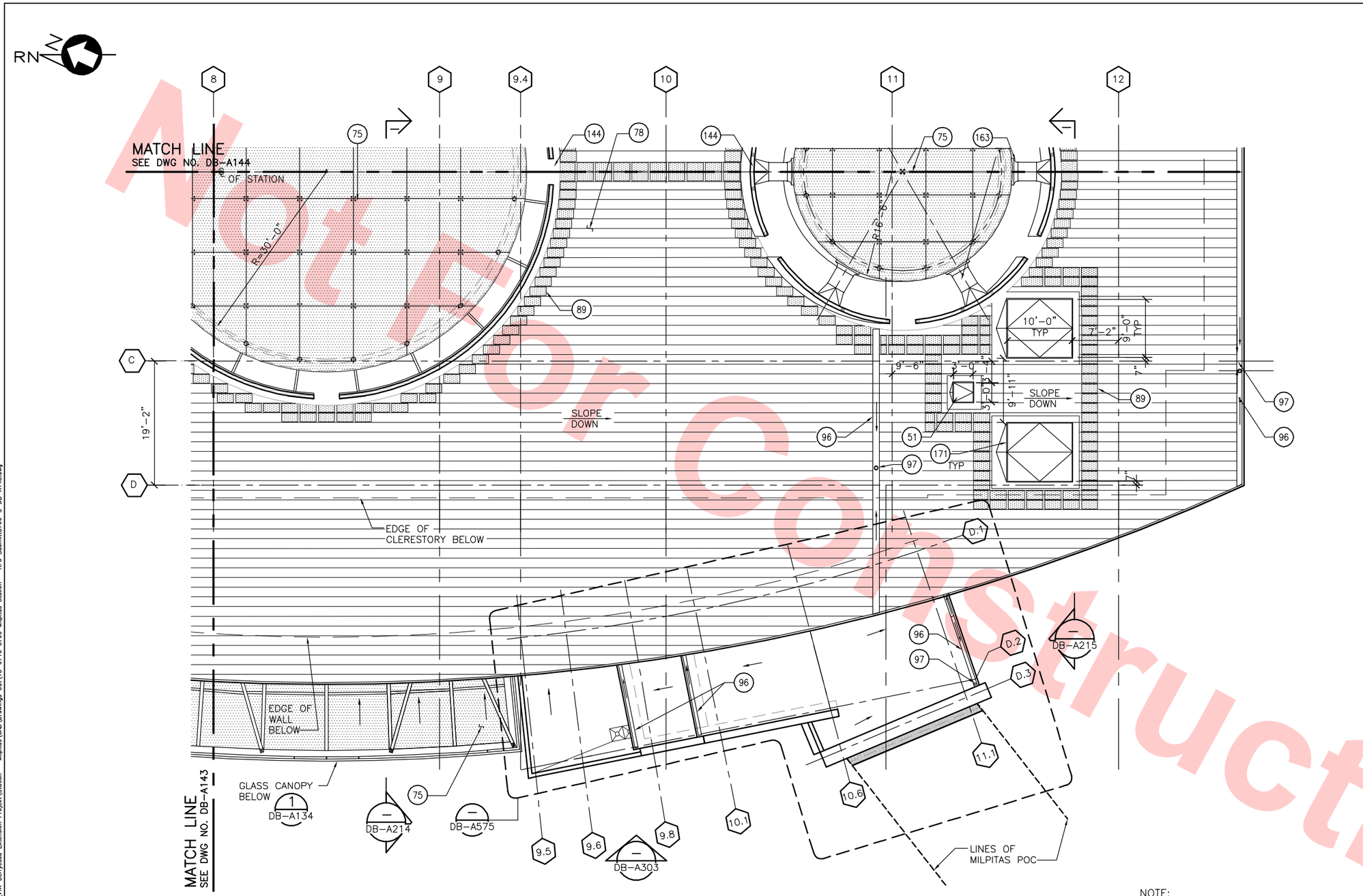

NOTE:

FOR MILPITAS POC REFER TO MONTAGUE LRT AND MILPITAS POC DRAWINGS

ROOF LEVEL PLAN

SCALE: 1/8"=1'-0"

DB-A140

KEY NOTES

- (51) ACCESS HATCH, SEE DETAIL 8/DB-A599
- (75) HORIZONTAL STRUCTURAL POINT SUPPORTED GLASS SKYLIGHT SYSTEM
- (77) MEMBRANE ROOFING
- (78) METAL ROOFING
- (89) ROOF WALK PAD
- (96) GUTTER
- (97) DOWNSPOUT
- (99) ROOF DRAIN AND OVERFLOW DRAIN
- (144) WIND FENCE
- (163) SKYLIGHT SMOKE EVACUATION FAN
- (171) EQUIPMENT ACCESS ROOF HATCH, SEE DWG NO. 4/DB-A610
- (191) SCUPPER DRAIN

NOTE

1. FOR DIMENSIONS OF ROOF GEOMETRY, SEE DWG NO. DB-A140, SIM

Santa Clara Valley Transportation Authority

____NO EXCEPTIONS TAKEN (NET)
____MAKE CORRECTIONS NOTED (MCN)
____AMEND AND RESUBMIT (A/R)

Any action shown above is subject to the terms of the contract and does not relieve the Contractor of any of its obligations under the contract, including design and detailing.

Contract No.: DB11002F

By: _____ Date: _____

8' 0' 8' 16'

GRAPHIC SCALE

KEY ROOF PLAN

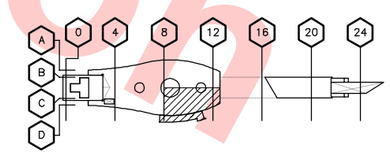

Not For Construction

REV	DATE	BY	SUB	APP	DESCRIPTION
0	20130710				READINESS FOR CONSTRUCTION
					REPLACES C700-S-DB-A125, REV. R

DESIGNED BY S. DEBNATH
DRAWN BY R. COLLADO
CHECKED BY E. BALLADA
IN CHARGE R. BARLAAN
DATE 20130710

LICENSED ARCHITECT SAMESH DEBNATH No. C21523 STATE OF CALIFORNIA

Skanska Shimmick Herzog
1436 California Circle
Milpitas, California 95035
A Joint Venture

Anil Verma Associates, Inc.
1970 Broadway, Suite 535 Oakland, CA 94612
Phone: (510) 835-2537 Fax: (510) 535-2339
SUBMITTED

Lockwood, Andrews & Newnam, Inc. A LAN & BALY COMPANY
T·Y·LIN INTERNATIONAL
APPROVED

VTA BART SILICON VALLEY
BART SILICON VALLEY BERRYESSA EXTENSION

LINE, TRACK, STATIONS AND SYSTEMS
DESIGN UNIT 023
MILPITAS STATION

ROOF LEVEL PLAN
SHEET 5 OF 7

CADD FILENAME C700-S-DB-A145.dwg
SIZE D | SCALE 1/8"=1'-0"
CONTRACT NO. C700 | REV. 0
AREA CODE DB | SHEET NO. A145 | PAGE NO. 0363

JosephG Jun 26, 2013 - 1:34pm G:\Current Projects\VTA-Berryessa Extension Project\Station - Milpitas\CAD\Drawings Out\13-0710 C700 Milpitas Station - RFC Submit\C700-S-DB-A145.dwg

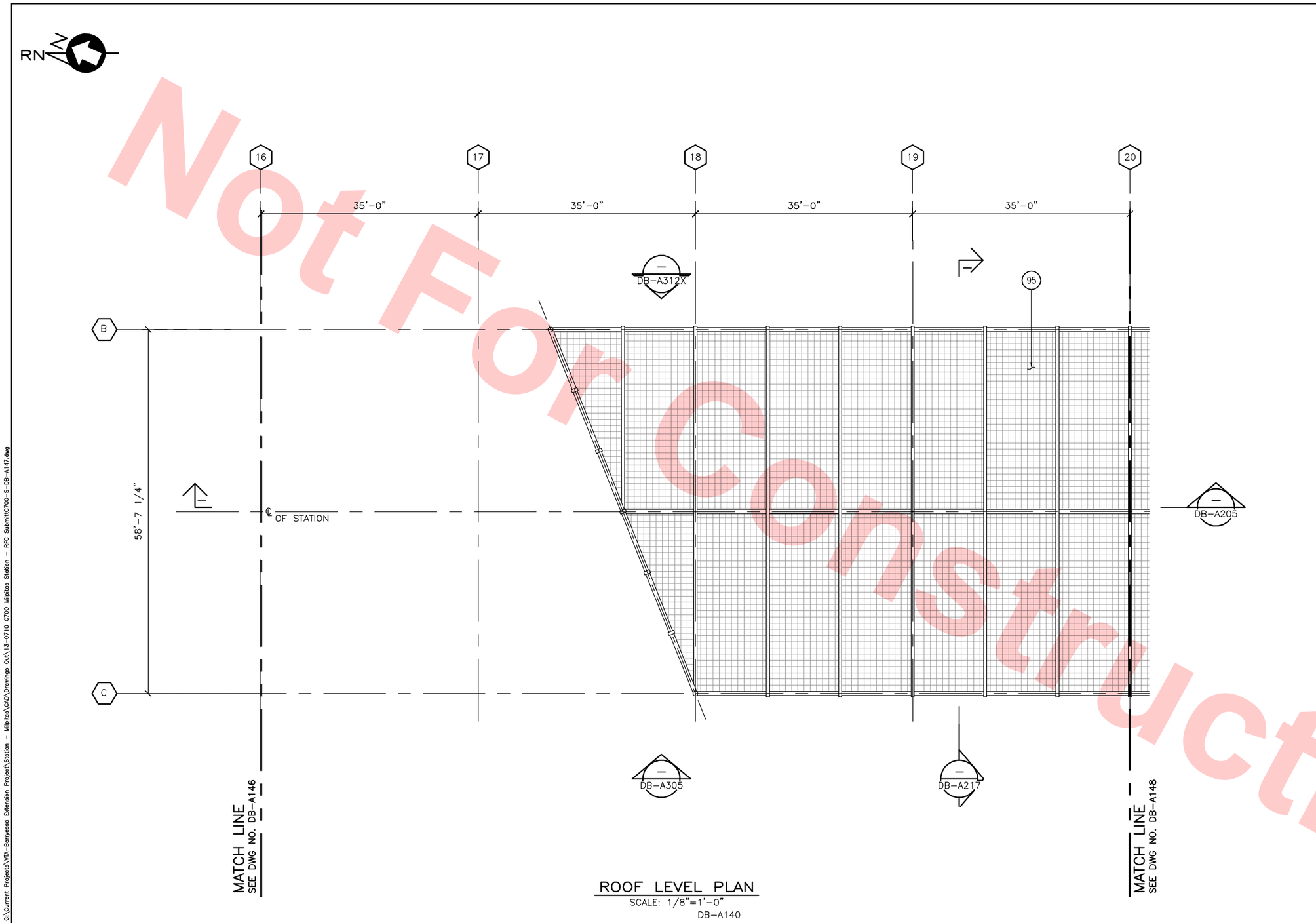

ROOF LEVEL PLAN
SCALE: 1/8"=1'-0"
DB-A140

Not For Construction

KEY NOTES

95 BIRD/SAFETY NETTING

Santa Clara Valley Transportation Authority

____NO EXCEPTIONS TAKEN (NET)
____MAKE CORRECTIONS NOTED (MCN)
____AMEND AND RESUBMIT (A/R)

Any action shown above is subject to the terms of the contract and does not relieve the Contractor of any of its obligations under the contract, including design and detailing.

Contract No.: DB11002F

By: _____ Date: _____

8' 0' 8' 16'
GRAPHIC SCALE

KEY PLAN

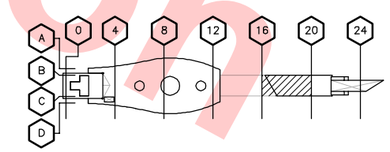

REV	DATE	BY	SUB	APP	DESCRIPTION
0	20130710				READINESS FOR CONSTRUCTION

DESIGNED BY S. DEBNATH
DRAWN BY R. COLLADO
CHECKED BY E. BALLADA
IN CHARGE R. BARLAAN
DATE 20130710

LICENSED ARCHITECT SOMESH DEBNATH No. C21523 STATE OF CALIFORNIA

Skanska Shimmick Herzog
1436 California Circle
Milpitas, California 95035
A Joint Venture

Anil Verma Associates, Inc.
1970 Broadway, Suite 225, Oakland, CA 94612
Phone: (510) 835-2537 Fax: (510) 835-2339

SUBMITTED

Lockwood, Andrews & Newnam, Inc. A LEO A DALY COMPANY
T·Y·LIN INTERNATIONAL

APPROVED

VTA BART SILICON VALLEY
BART SILICON VALLEY BERRYESSA EXTENSION

LINE, TRACK, STATIONS AND SYSTEMS
DESIGN UNIT 023
MILPITAS STATION

ROOF LEVEL PLAN
SHEET 6 OF 7

CADD FILENAME C700-S-DB-A147.dwg
SIZE D | SCALE 1/8"=1'-0"
CONTRACT NO. C700 | REV. 0
AREA CODE DB | SHEET NO. A147 | PAGE NO. 0364

JosephG Jun 26, 2013 - 1:35pm G:\Current Projects\VTA-Berryessa Extension Project\Station - Milpitas\CAD\Drawings Out\13-0710 C700 Milpitas Station - RFC Submit\C700-S-DB-A147.dwg

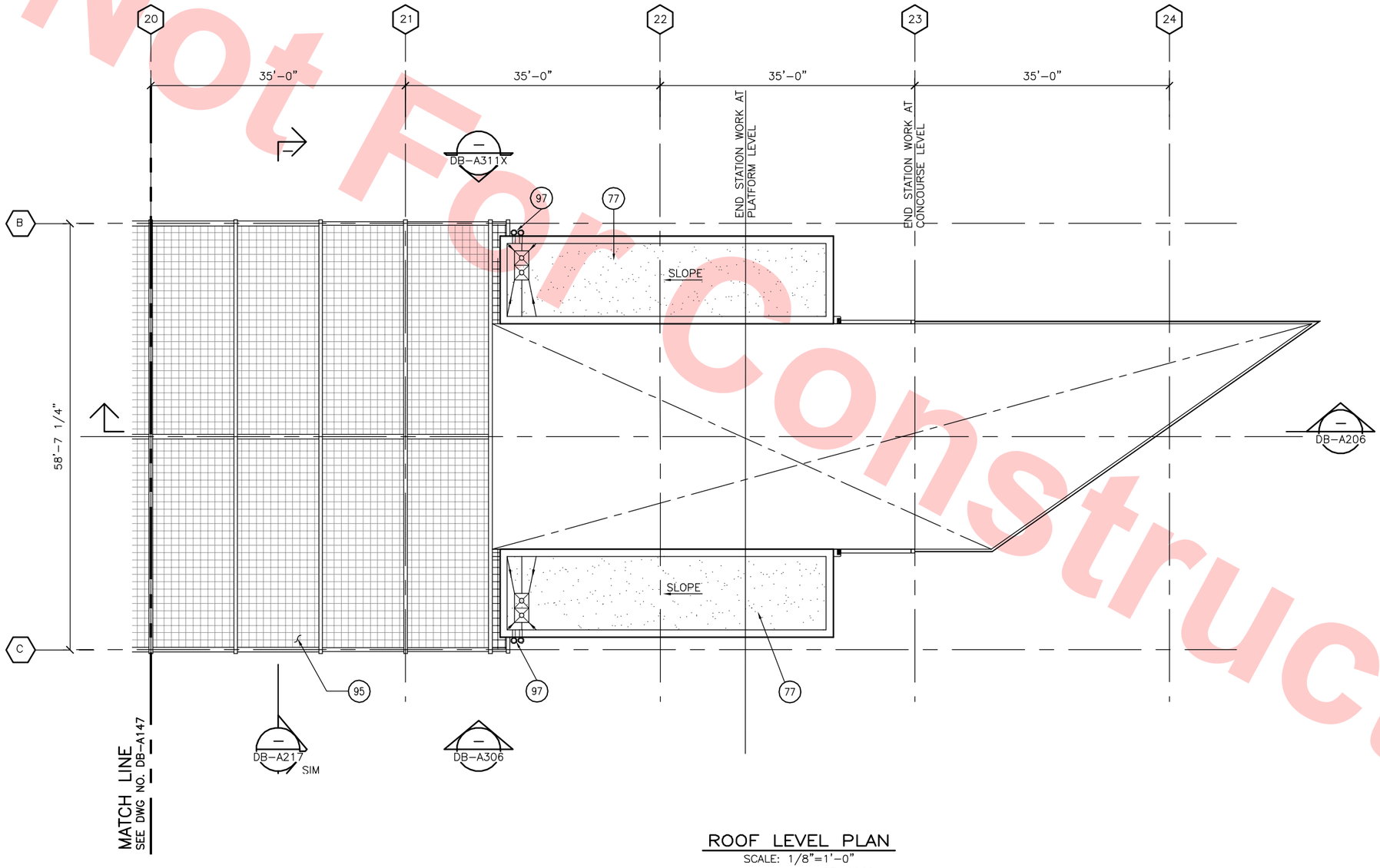

ROOF LEVEL PLAN
SCALE: 1/8"=1'-0"
DB-A140

KEY NOTES

77 MEMBRANE ROOFING
95 BIRD/SAFETY NETTING
97 DOWNSPOUT/RAINWATER LEADER

Santa Clara Valley Transportation Authority

____NO EXCEPTIONS TAKEN (NET)
____MAKE CORRECTIONS NOTED (MCN)
____AMEND AND RESUBMIT (A/R)

Any action shown above is subject to the terms of the contract and does not relieve the Contractor of any of its obligations under the contract, including design and detailing.

Contract No.: DB11002F

By: _____ Date: _____

8' 0' 8' 16'
GRAPHIC SCALE

KEY SECTION

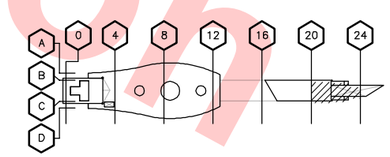

Not For Construction

REV	DATE	BY	SUB	APP	DESCRIPTION
0	20130710				READINESS FOR CONSTRUCTION

DESIGNED BY S. DEBNATH
DRAWN BY R. COLLADO
CHECKED BY E. BALLADA
IN CHARGE R. BARLAAN
DATE 20130710

LICENSED ARCHITECT SOMESH DEBNATH No. C21523 STATE OF CALIFORNIA

Skanska Shimmick Herzog
1436 California Circle
Milpitas, California 95035
A Joint Venture

Anil Verma Associates, Inc.
1970 Broadway, Suite 525, Oakland, CA 94612
Phone: (510) 835-2337 Fax: (510) 835-2339

Lockwood, Andrews & Newnam, Inc. A LAN & BAH COMPANY
T·Y·LIN INTERNATIONAL

SUBMITTED _____
APPROVED _____

VTA BART SILICON VALLEY
BART SILICON VALLEY BERRYESSA EXTENSION

LINE, TRACK, STATIONS AND SYSTEMS
DESIGN UNIT 023
MILPITAS STATION

ROOF LEVEL PLAN
SHEET 7 OF 7

CADD FILENAME C700-S-DB-A148.dwg
SIZE D | SCALE 1/8"=1'-0"
CONTRACT NO. C700 | REV. 0
AREA CODE DB | SHEET NO. A148 | PAGE NO. 0365

Jun 26, 2013 – 1:35pm G:\Current Projects\VTA-Berryessa Extension Project\Station – Milpitas\CAD\Drawings Out\13-0710 C700 Milpitas Station – RFC Submit\C700-S-DB-A148.dwg
JosephG

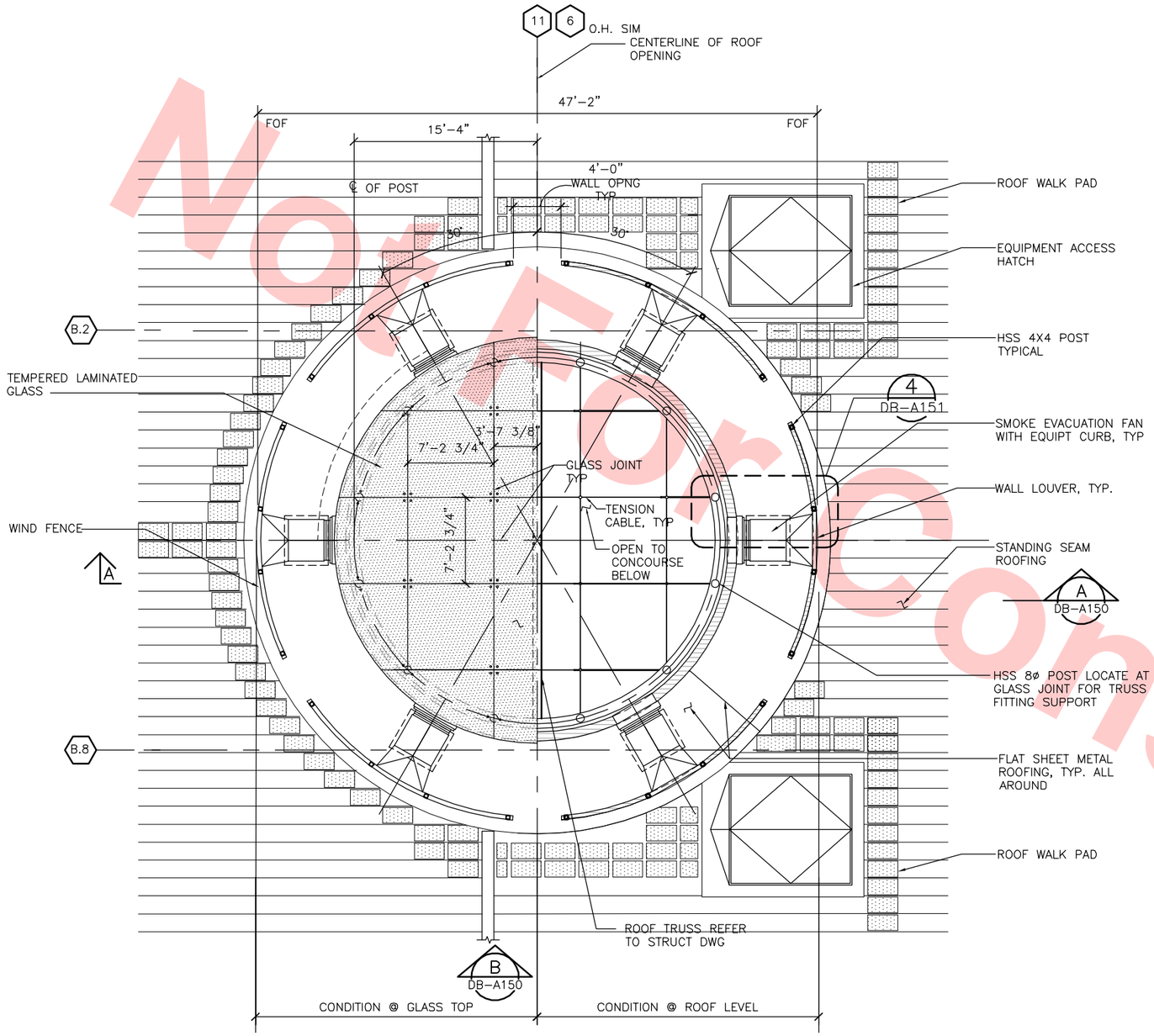

ENLARGED PLAN–SKYLIGHT 3 (1 SIM) 1 DB–A150

SCALE: 3/16" = 1'-0

DB–A140

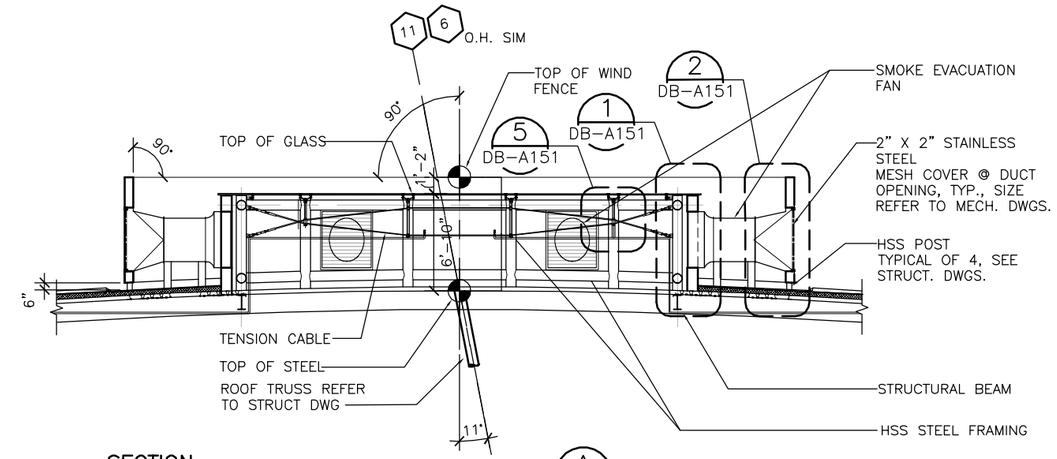

SECTION

SCALE: 3/16" = 1'-0

A DB–A150

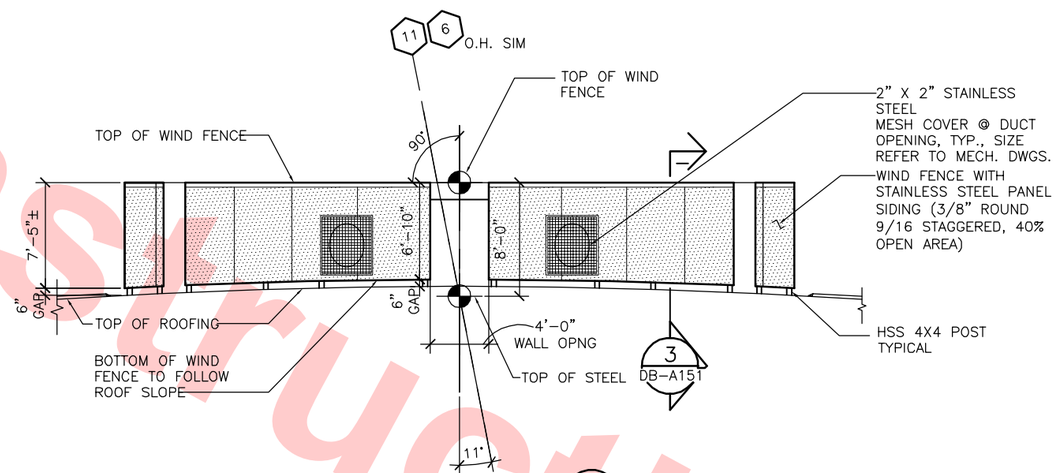

ELEVATION

SCALE: 3/16" = 1'-0

B DB–A150

Santa Clara Valley Transportation Authority

____NO EXCEPTIONS TAKEN (NET)
____MAKE CORRECTIONS NOTED (MCN)
____AMEND AND RESUBMIT (A/R)

Any action shown above is subject to the terms of the contract and does not relieve the Contractor of any of its obligations under the contract, including design and detailing.

Contract No.: DB11002F

By: _____ **Date:** _____

Not For Construction

REV	DATE	BY	SUB	APP	DESCRIPTION
0	20130710				READINESS FOR CONSTRUCTION

DESIGNED BY S. DEBNATH
DRAWN BY EAB
CHECKED BY E. BALLADA
IN CHARGE R. BARLAAN
DATE 20130710

LICENSED ARCHITECT SOMESH DEBNATH No. C21523 STATE OF CALIFORNIA

Skanska Shimmick Herzog
1436 California Circle
Milpitas, California 95035
A Joint Venture

Anil Verma Associates, Inc.
1970 Broadway, Suite 335 Oakland, CA 94612
Phone: (510) 835-2537 Fax: (510) 835-2339
SUBMITTED

Lockwood, Andrews & Newnam, Inc. A LEO A DALY COMPANY
T·Y·LIN INTERNATIONAL
APPROVED

VTA BART SILICON VALLEY
BART SILICON VALLEY BERRYESSA EXTENSION

LINE, TRACK, STATIONS AND SYSTEMS
DESIGN UNIT 023
MILPITAS STATION
SKYLIGHT 1 & 3 (SIM)
ENLARGED PLAN, ELEVATION AND SECTION

CADD FILENAME C700-S-DB-A150.dwg
SIZE | SCALE 3/16"=1'-0"
CONTRACT NO. C700 | REV. 0
AREA CODE DB | SHEET NO. A150 | PAGE NO. 0366

JosephG Jun 26, 2013 – 1:36pm G:\Current Projects\VTA-Berryessa Extension Project\Station – Milpitas\CAD\Drawings Out\13-0710 C700 Milpitas Station – RFC Submittal\C700-S-DB-A150.dwg

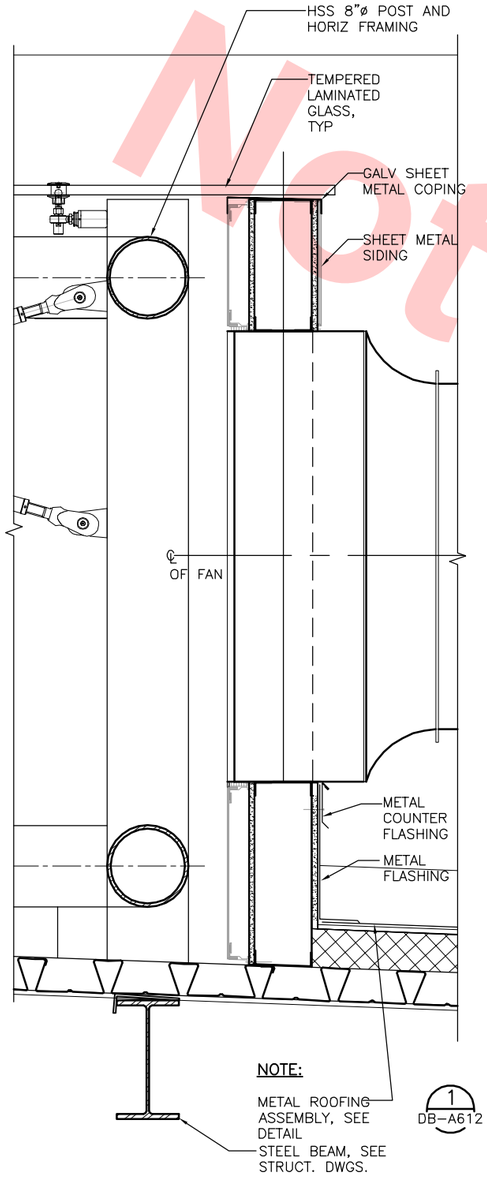

DETAILED SECTION 1 DB-A151
SCALE: 1 1/2" – 1'-0"
DB-A150

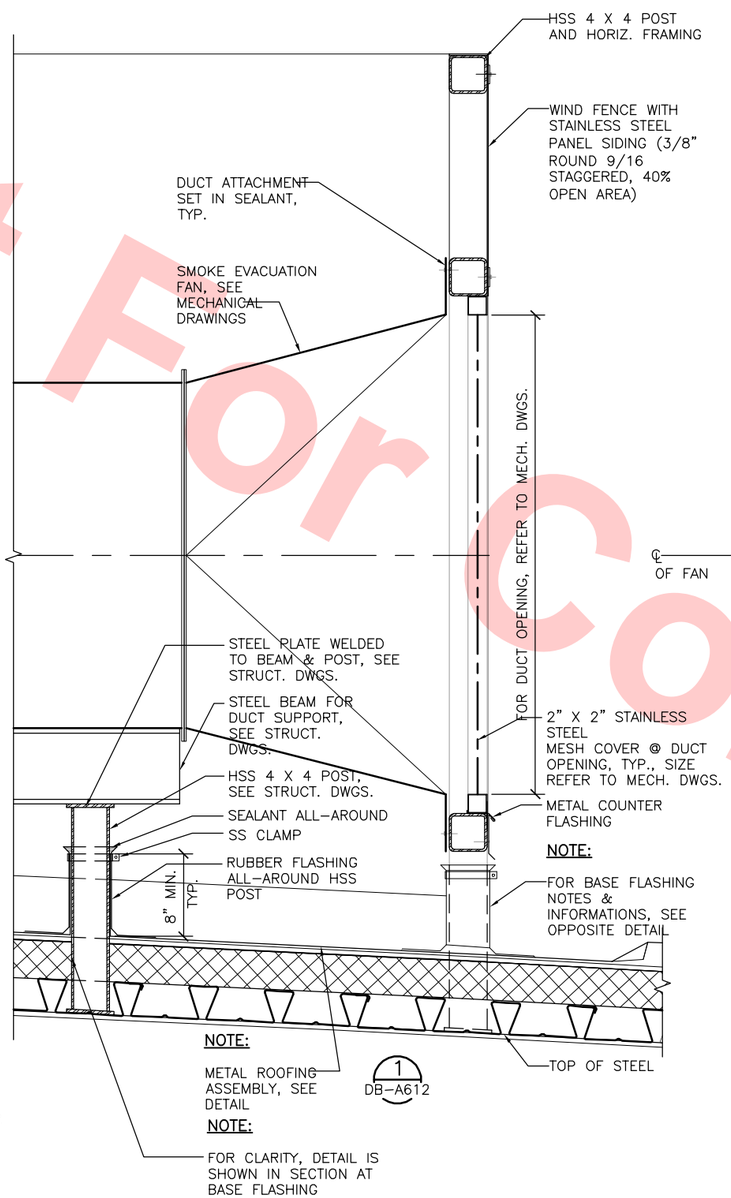

DETAILED SECTION 2 DB-A151
SCALE: 1 1/2" – 1'-0"
DB-A150

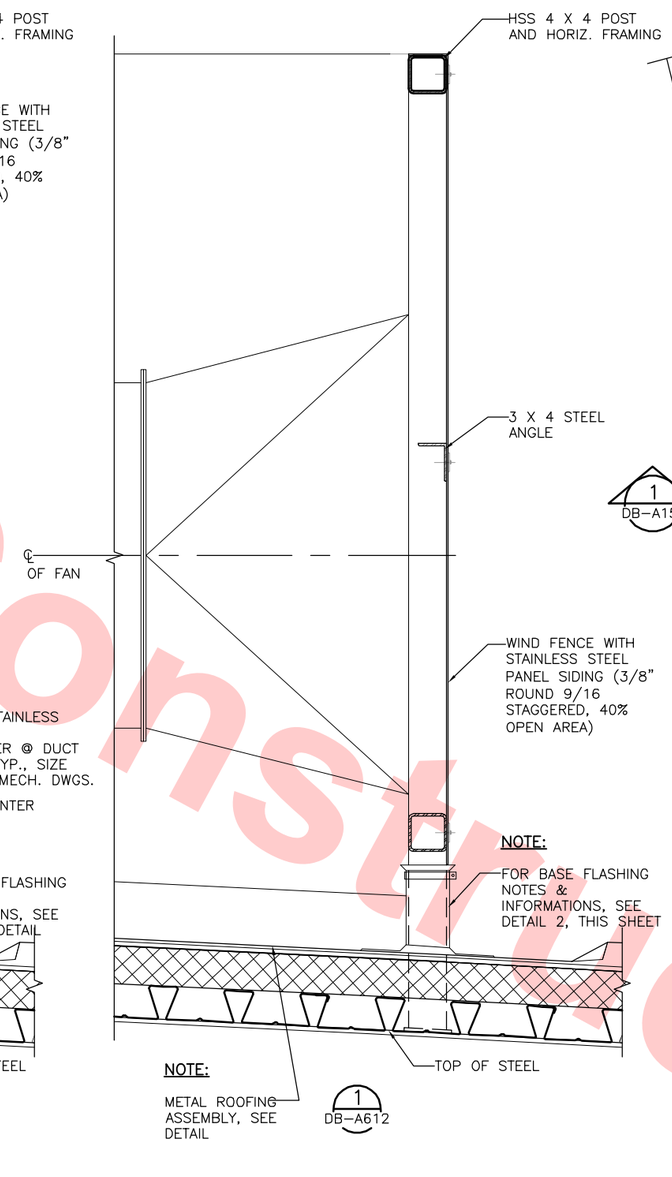

DETAILED SECTION 3 DB-A151
SCALE: 1 1/2" – 1'-0"
DB-A150

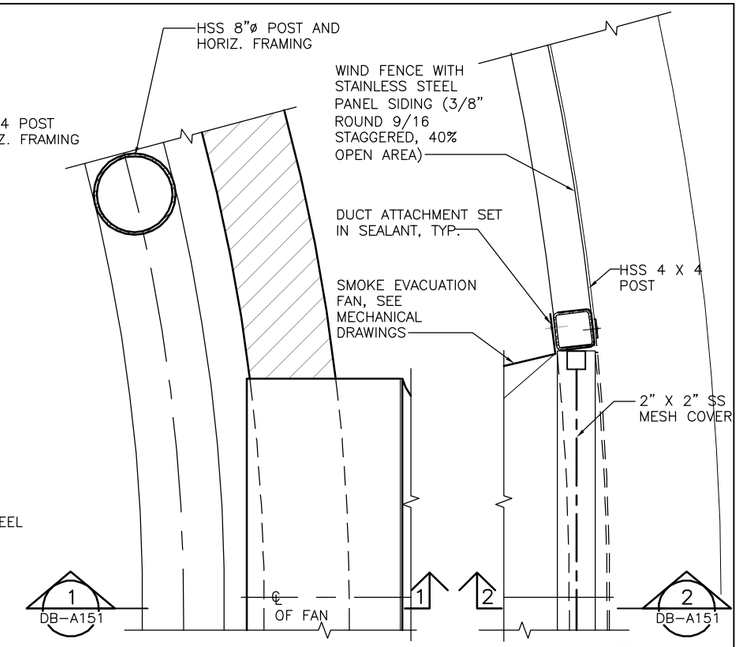

DETAILED PLAN 4 DB-A151
SCALE: 1 1/2" – 1'-0"
DB-A150

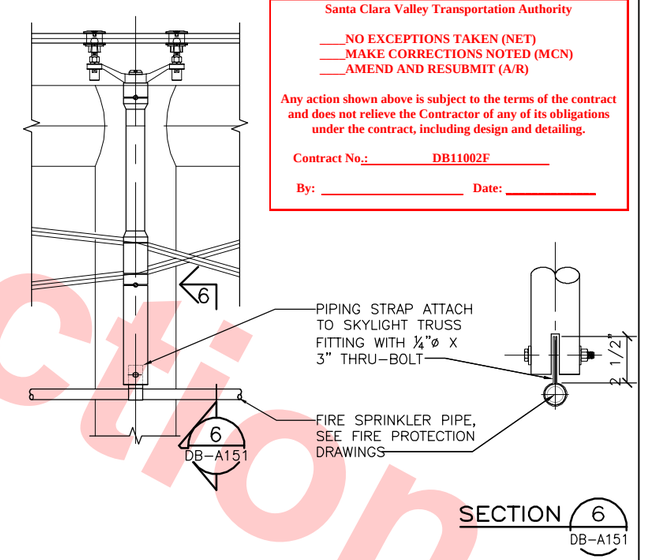

SECTION 6 DB-A151

SPRINKLER PIPE ATTACHMENT DET 5 DB-A151
SCALE: 1 1/2" – 1'-0"
DB-A150

Santa Clara Valley Transportation Authority

____NO EXCEPTIONS TAKEN (NET)
____MAKE CORRECTIONS NOTED (MCN)
____AMEND AND RESUBMIT (A/R)

Any action shown above is subject to the terms of the contract and does not relieve the Contractor of any of its obligations under the contract, including design and detailing.

Contract No.: DB11002F

By: _____ Date: _____

Not For Construction

REV	DATE	BY	SUB	APP	DESCRIPTION
0	20130710				READINESS FOR CONSTRUCTION

DESIGNED BY S. DEBNATH
DRAWN BY EAB/RC/PPB
CHECKED BY E. BALLADA
IN CHARGE R. BARLAAN
DATE 20130710

LICENSED ARCHITECT SOMESH DEBNATH No. C21523 STATE OF CALIFORNIA

Skanska Shimmick Herzog
1436 California Circle
Milpitas, California 95035
A Joint Venture

Anil Verma Associates, Inc.
1970 Broadway, Suite 525 Oakland, CA 94612
Phone: (510) 465-2537 Fax: (510) 535-2339
SUBMITTED

Lockwood, Andrews & Newnam, Inc. A LAN & BALY COMPANY
T·Y·LIN INTERNATIONAL
APPROVED

VTA BART SILICON VALLEY
BART SILICON VALLEY BERRYESSA EXTENSION

LINE, TRACK, STATIONS AND SYSTEMS
DESIGN UNIT 023
MILPITAS STATION

SKYLIGHTS 1 & 3 (SIM)
DETAILED PLAN & SECTION

CADD FILENAME C700-S-DB-A151.dwg
SIZE D | SCALE 1 1/2"=1'-0"
CONTRACT NO. C700 | REV. 0
AREA CODE DB | SHEET NO. A151 | PAGE NO. 0367

JoseinG Jun 26, 2013 – 1:36pm G:\Current Projects\VTA-Berryessa Extension Project\Station – Milpitas\CAD\Drawings Out\13-0710 C700 Milpitas Station – RFC Submit\C700-S-DB-A151.dwg

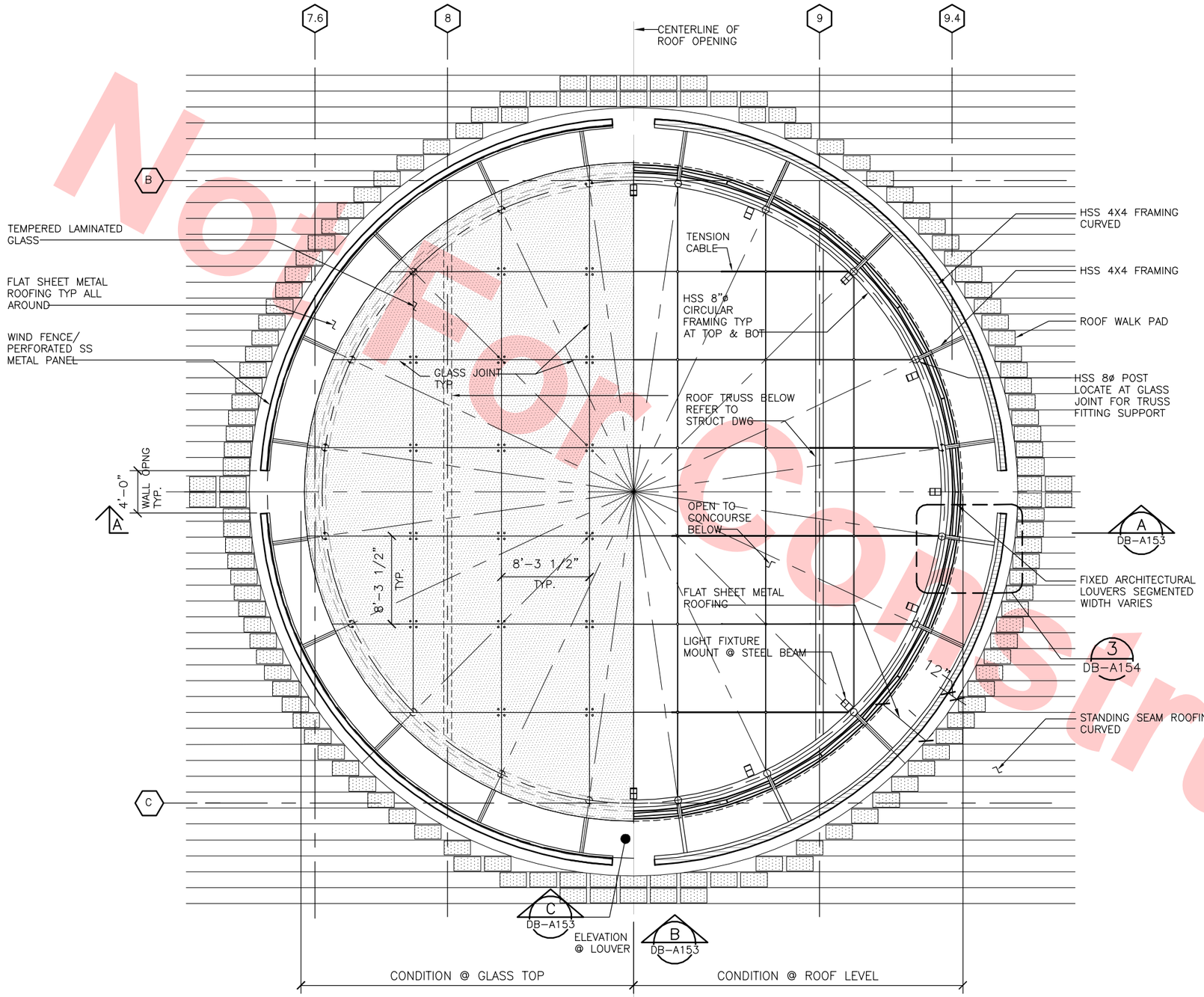

ENLARGED PLAN – SKYLIGHT 2 (1 / DB-A152)

SCALE: 3/16" = 1'-0

DB-A140

Not For Construction

Santa Clara Valley Transportation Authority

____NO EXCEPTIONS TAKEN (NET)
____MAKE CORRECTIONS NOTED (MCN)
____AMEND AND RESUBMIT (A/R)

Any action shown above is subject to the terms of the contract and does not relieve the Contractor of any of its obligations under the contract, including design and detailing.

Contract No.: DB11002F

By: _____ Date: _____

REV	DATE	BY	SUB	APP	DESCRIPTION
0	20130710				READINESS FOR CONSTRUCTION

DESIGNED BY S. DEBNATH
DRAWN BY EAB/RC
CHECKED BY E. BALLADA
IN CHARGE R. BARLAAN
DATE 20130710

LICENSED ARCHITECT SUNESH DEBNATH No. C21523 STATE OF CALIFORNIA

Skanska Shimmick Herzog
1436 California Circle
Milpitas, California 95035
A Joint Venture

Anil Verma Associates, Inc.
1970 Broadway, Suite 525, Oakland, CA 94612
Phone: (510) 835-2537 Fax: (510) 835-2339
SUBMITTED

Lockwood, Andrews & Newnam, Inc. A LEO A DALY COMPANY
T·Y·LIN INTERNATIONAL
APPROVED

VTA BART SILICON VALLEY
BART SILICON VALLEY BERRYESSA EXTENSION

LINE, TRACK, STATIONS AND SYSTEMS DESIGN UNIT 023
MILPITAS STATION
ENLARGED SKYLIGHT 2 PLAN

CADD FILENAME C700-S-DB-A152.dwg
SIZE D | SCALE 3/16"=1'-0"
CONTRACT NO. C700 | REV. 0
AREA CODE DB | SHEET NO. A152 | PAGE NO. 0368

JosephG Jun 26, 2013 – 1:37pm G:\Current Projects\VTA-Berryessa Extension Project\Station – Milpitas\CAD\Drawings Out\13-0710 C700 Milpitas Station – RFC Submit\C700-S-DB-A152.dwg

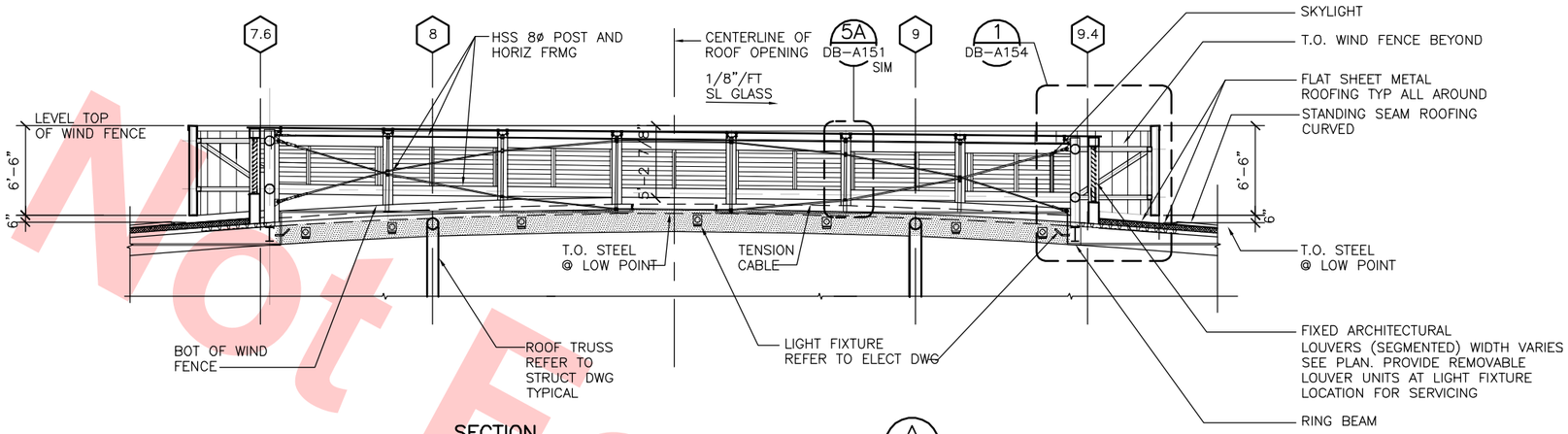

SECTION

SCALE: 3/16" = 1'-0"

A
DB-A153
DB-A152

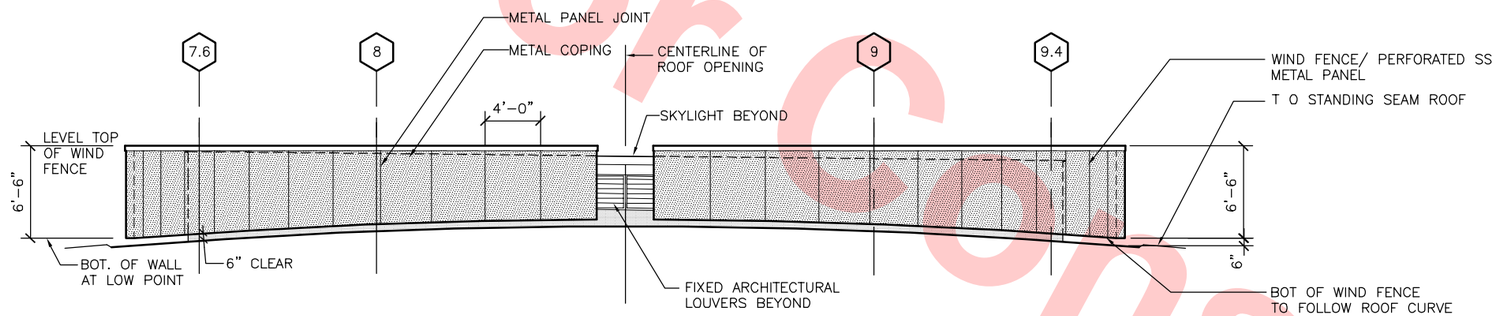

ELEVATION

SCALE: 3/16" = 1'-0"

B
DB-A153
DB-A152

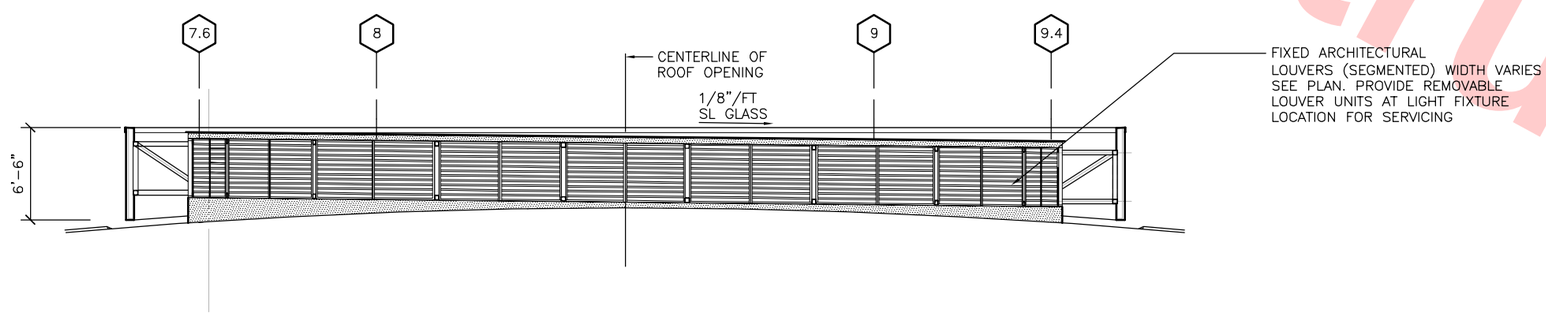

ELEVATION AT LOUVER

SCALE: 3/16" = 1'-0"

C
DB-A153
DB-A152

Santa Clara Valley Transportation Authority

____NO EXCEPTIONS TAKEN (NET)
____MAKE CORRECTIONS NOTED (MCN)
____AMEND AND RESUBMIT (A/R)

Any action shown above is subject to the terms of the contract and does not relieve the Contractor of any of its obligations under the contract, including design and detailing.

Contract No.: DB11002F

By: _____ Date: _____

Not For Construction

REV	DATE	BY	SUB	APP	DESCRIPTION
0	20130710				READINESS FOR CONSTRUCTION

DESIGNED BY S. DEBNATH
DRAWN BY EAB/RC
CHECKED BY E. BALLADA
IN CHARGE R. BARLAAN
DATE 20130710

LICENSED ARCHITECT SOMESH DEBNATH No. C21523 STATE OF CALIFORNIA

Skanska Shimmick Herzog
1436 California Circle
Milpitas, California 95035
A Joint Venture

Anil Verma Associates, Inc.
1970 Broadway, Suite 525 Oakland, CA 94612
Phone: (510) 835-2537 Fax: (510) 535-2339
SUBMITTED

Lockwood, Andrews & Newnam, Inc. A LAN & BALY COMPANY
T·Y·LIN INTERNATIONAL
APPROVED

VTA BART SILICON VALLEY
BART SILICON VALLEY BERRYESSA EXTENSION

LINE, TRACK, STATIONS AND SYSTEMS
DESIGN UNIT 023
MILPITAS STATION

SKYLIGHT 2 ELEVATION AND SECTIONS

CADD FILENAME C700-S-DB-A153.dwg
SIZE D | SCALE 3/16"=1'-0"
CONTRACT NO. C700 | REV. 0
AREA CODE DB | SHEET NO. A153 | PAGE NO. 0369

JosephG Jun 26, 2013 - 1:37pm G:\Current Projects\VTA-Berryessa Extension Project\Station - Milpitas\CAD\Drawings Out\13-0710 C700 Milpitas Station - RFC Submit\C700-S-DB-A153.dwg

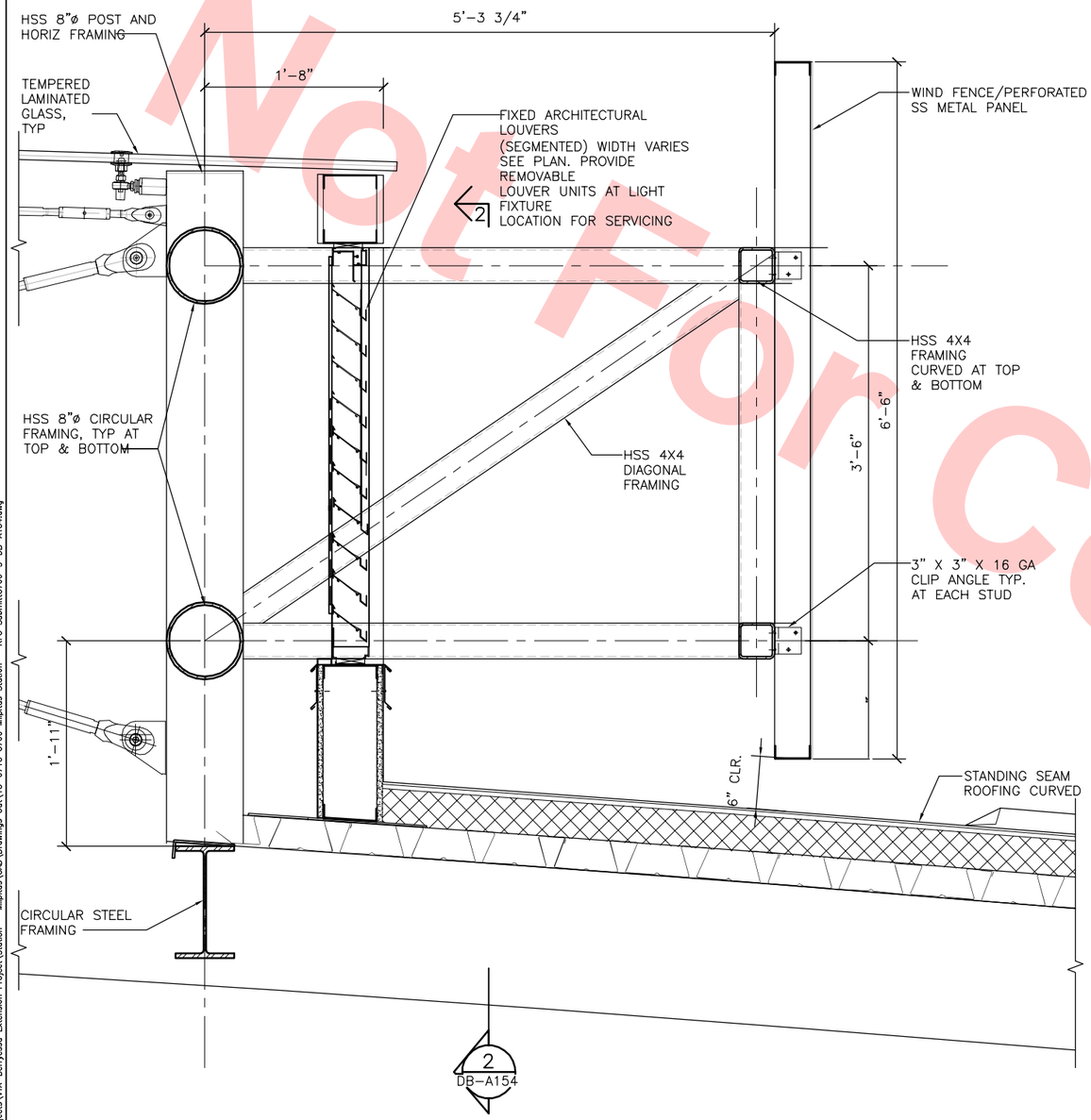

DETAILED SECTION
SCALE: 1 1/2" – 1'-0"
1 DB-A154

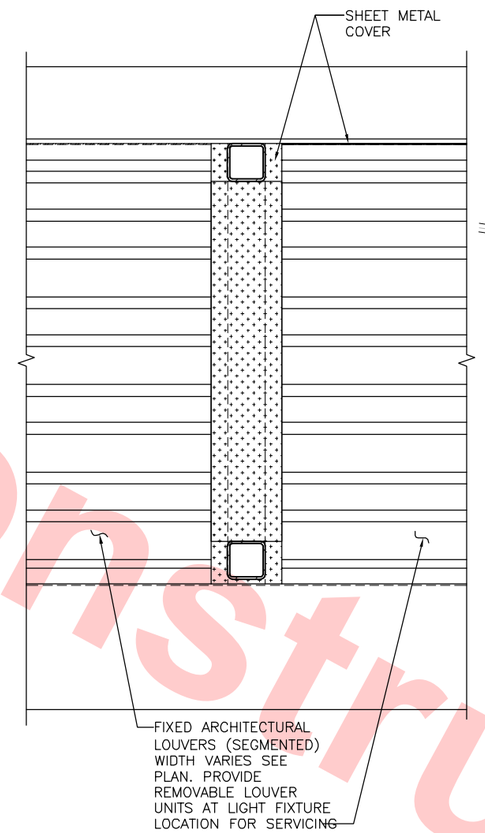

DETAILED PLAN
SCALE: 1 1/2" – 1'-0"
2 DB-A154

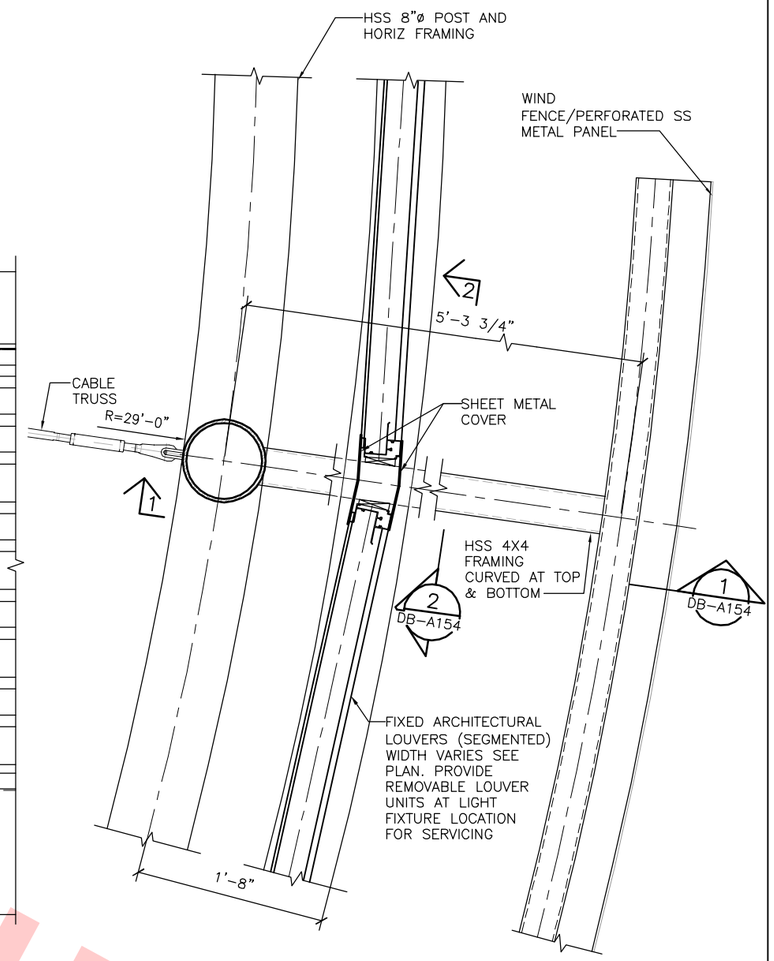

DETAILED PLAN
SCALE: 1 1/2" – 1'-0"
3 DB-A154

DB-A152

DB-A153

Santa Clara Valley Transportation Authority

____NO EXCEPTIONS TAKEN (NET)
____MAKE CORRECTIONS NOTED (MCN)
____AMEND AND RESUBMIT (A/R)

Any action shown above is subject to the terms of the contract and does not relieve the Contractor of any of its obligations under the contract, including design and detailing.

Contract No.: DB11002F

By: _____ **Date:** _____

Not For Construction

REV	DATE	BY	SUB	APP	DESCRIPTION
0	20130710				READINESS FOR CONSTRUCTION

DESIGNED BY S. DEBNATH
DRAWN BY EAB/RC
CHECKED BY E. BALLADA
IN CHARGE R. BARLAAN
DATE 20130710

LICENSED ARCHITECT SOMESH DEBNATH No. C21523 STATE OF CALIFORNIA

Skanska Shimmick Herzog
1436 California Circle
Milpitas, California 95035
A Joint Venture

Anil Verma Associates, Inc.
1970 Broadway, Suite 555 Oakland, CA 94612
Phone: (510) 835-2537 Fax: (510) 535-2339
SUBMITTED

Lockwood, Andrews & Newnam, Inc. A LEO A DALY COMPANY
T·Y·LIN INTERNATIONAL
APPROVED

VTA BART SILICON VALLEY
BART SILICON VALLEY BERRYESSA EXTENSION

LINE, TRACK, STATIONS AND SYSTEMS DESIGN UNIT 023
MILPITAS STATION

SKYLIGHT 2
DETAILED PLAN & SECTION

CADD FILENAME C700-S-DB-A154.dwg
SIZE D | SCALE 1 1/2"=1'-0"
CONTRACT NO. C700 | REV. 0
AREA CODE DB | SHEET NO. A154 | PAGE NO. 0370

JosephG Jun 26, 2013 – 1:38pm G:\Current Projects\VTA-Berryessa Extension Project\Station – Milpitas\CAD\Drawings Out\13-0710 C700 Milpitas Station – RFC Submit\C700-S-DB-A154.dwg

Not For Construction

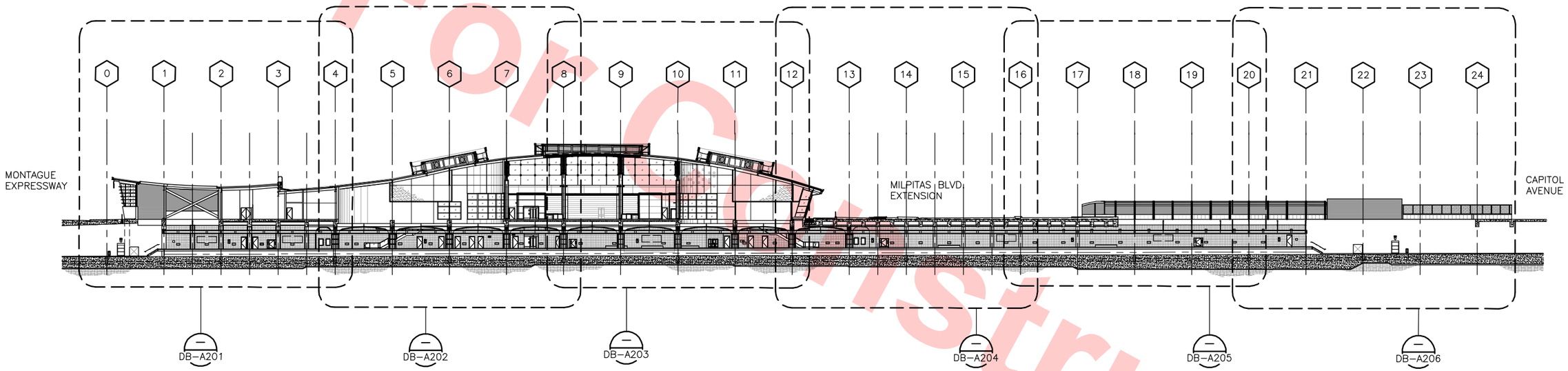

KEY LONGITUDINAL SECTION

SCALE: 1/32"=1'-0"

DB-A090
DB-A110X
DB-A120X
DB-A130
DB-A140
DB-A400
DB-A410

Santa Clara Valley Transportation Authority

____NO EXCEPTIONS TAKEN (NET)
____MAKE CORRECTIONS NOTED (MCN)
____AMEND AND RESUBMIT (A/R)

Any action shown above is subject to the terms of the contract and does not relieve the Contractor of any of its obligations under the contract, including design and detailing.

Contract No.: DB11002F

By: _____ **Date:** _____

REV	DATE	BY	SUB	APP	DESCRIPTION
0	20130710				READINESS FOR CONSTRUCTION

DESIGNED BY S. DEBNATH
DRAWN BY R. COLLADO
CHECKED BY E. BALLADA
IN CHARGE R. BARLAAN
DATE 20130710

LICENSED ARCHITECT SOMESH DEBNATH No. C21523 STATE OF CALIFORNIA

Skanska Shimmick Herzog
1436 California Circle
Milpitas, California 95035
A Joint Venture

Anil Verma Associates, Inc.
1970 Broadway, Suite 325 Oakland, CA 94612
Phone: (510) 835-2537 Fax: (510) 835-2339

Lockwood, Andrews & Newnam, Inc. A LEO A DALY COMPANY

T·Y·LIN INTERNATIONAL

SUBMITTED _____

APPROVED _____

VTA BART SILICON VALLEY

BART SILICON VALLEY BERRYESSA EXTENSION

LINE, TRACK, STATIONS AND SYSTEMS
DESIGN UNIT 023
MILPITAS STATION

KEY SECTION
LONGITUDINAL

CADD FILENAME C700-S-DB-A200.dwg
SIZE D | SCALE 1/32"=1'-0"
CONTRACT NO. C700 | REV. 0
AREA CODE DB | SHEET NO. A200 | PAGE NO. 0371

JosephG Jun 26, 2013 - 1:38pm G:\Current Projects\VTA-Berryessa Extension Project\Station - Milpitas\CAD\Drawings Out\13-0710 C700 Milpitas Station - RFC Submittal\C700-S-DB-A200.dwg

Santa Clara Valley Transportation Authority

____NO EXCEPTIONS TAKEN (NET)
____MAKE CORRECTIONS NOTED (MCN)
____AMEND AND RESUBMIT (A/R)

Any action shown above is subject to the terms of the contract and does not relieve the Contractor of any of its obligations under the contract, including design and detailing.

Contract No.: DB11002F

By: _____ Date: _____

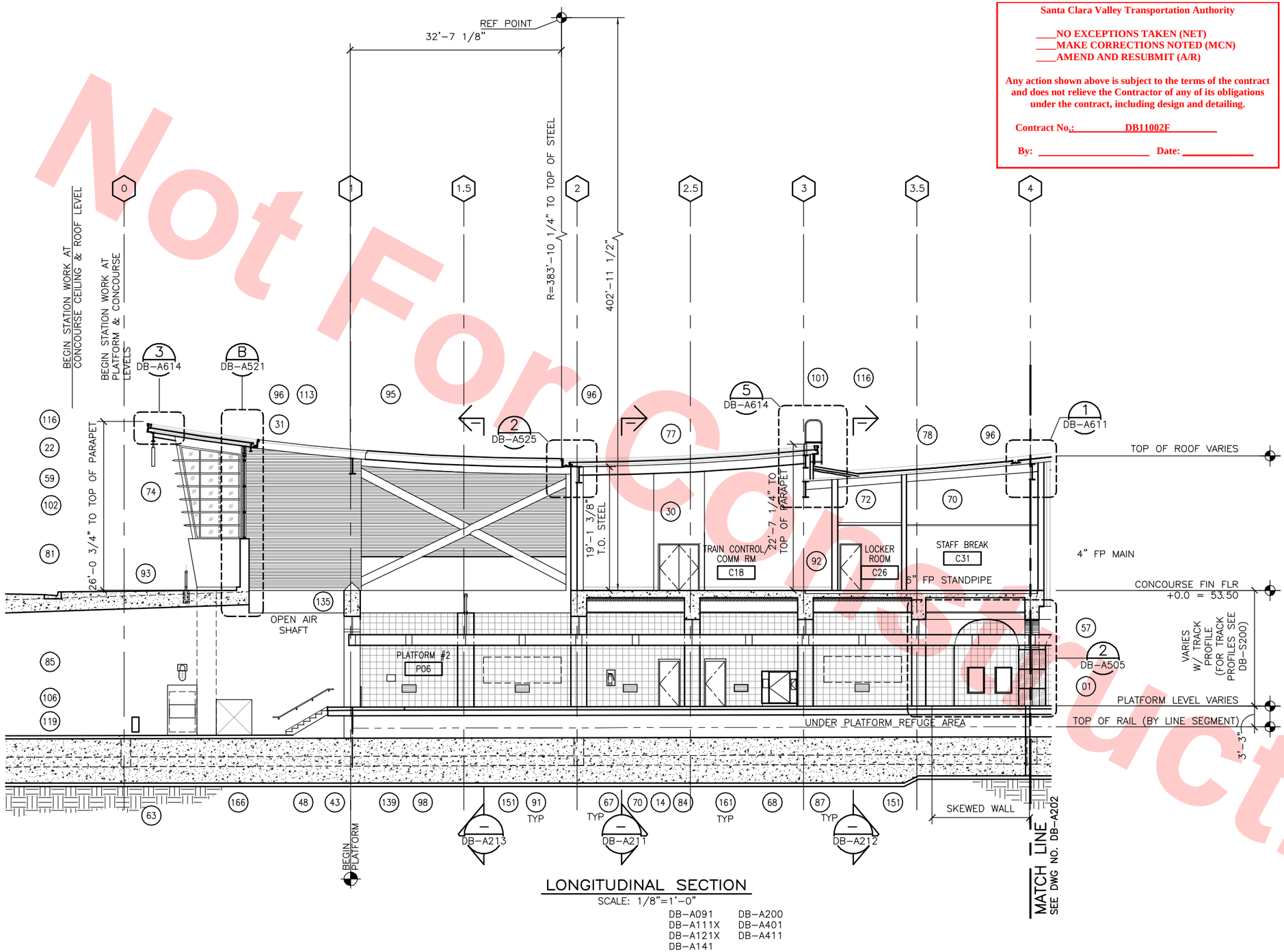

LONGITUDINAL SECTION

SCALE: 1/8"=1'-0"

DB-A091 DB-A200
DB-A111X DB-A401
DB-A121X DB-A411
DB-A141

KEY NOTES

01	MAP CASE WALL MOUNTED, BFS- DET 4/A583
14	SLPA – BFS SHTS AS44 & AS45
22	SIGN (REFER TO SIGNAGE DRAWINGS)
30	STRUCTURAL BEAM
31	STRUCTURAL MEMBER
43	END-OF-PLATFORM GATE WITH LATCHING POST, SEE BFS DET 1/AS70, SIM
48	HANDRAIL – METAL
57	ARCH PROFILE, REFER TO SHEET DB-A505
59	GLASS WALL SYSTEM – TYPE 3
63	CATCH BASIN
67	FIRE EXTINGUISHER CABINET – SEE FIRE PROTECTION DRAWINGS
68	FIRE HOSE CABINET – SEE FIRE PROTECTION DRAWINGS AND BFS SHEETS AS65-AS67
70	SUSPENDED LINEAR METAL CEILING
72	GYPSUM BOARD CEILING
74	EXPOSED METAL DECK
77	MEMBRANE ROOFING
78	METAL ROOFING
81	COMPOSITE WALL PANEL WP-1, SEE DWG NO. DB-A701
84	MAT SLAB
85	RETAINING WALL
87	ALUMINUM CLADDING FILL IN SECTION, SEE SIGNAGE DWGS
91	TILE
92	THERMAL OR ACOUSTIC INSULATION R13 (RIGID)
93	RAILING – S. STL
95	BIRD/SAFETY NETTING
96	GUTTER
98	TRENCH DRAIN
101	FIXED LADDER
102	DECORATIVE SS MESH
106	BLUE LIGHT ALCOVE
113	METAL WALL PANEL WP-2, SEE DWG NO. DB-A701
116	ARCHITECTURAL METAL FASCIA, RF-1, SEE DWG NO. DB-A701
119	FIRE EXTINGUISHER NICHE
135	METAL COVER
139	PABX AND EMERGENCY TELEPHONE LOCKED BOX, SEE COMM DRAWINGS
151	ADVERTISEMENT FRAME SPACE
161	LOW WALL VENT
166	RAIL LUBRICATOR ALCOVE

KEY SECTION

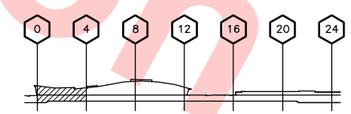

Not For Construction

REV	DATE	BY	SUB	APP	DESCRIPTION
0	20130710				READINESS FOR CONSTRUCTION

DESIGNED BY S. DEBNATH
DRAWN BY R. COLLADO
CHECKED BY E. BALLADA
IN CHARGE R. BARLAAN
DATE 20130710

LICENSED ARCHITECT SOMESH DEBNATH No. C21523 STATE OF CALIFORNIA

Skanska Shimmick Herzog
1436 California Circle
Milpitas, California 95035
A Joint Venture

Anil Verma Associates, Inc.
1970 Broadway, Suite 525, Oakland, CA 94612
Phone: (510) 835-2537 Fax: (510) 835-2339
SUBMITTED

Lockwood, Andrews & Newnam, Inc. A LAN & BALL COMPANY
T·Y·LIN INTERNATIONAL
APPROVED

VTA BART SILICON VALLEY
BART SILICON VALLEY BERRYESSA EXTENSION

LINE, TRACK, STATIONS AND SYSTEMS
DESIGN UNIT 023
MILPITAS STATION

LONGITUDINAL SECTION
SHEET 1 OF 6

CADD FILENAME C700-S-DB-A201.dwg
SIZE D | SCALE 1/8"=1'-0"
CONTRACT NO. C700 | REV. 0
AREA CODE DB | SHEET NO. A201 | PAGE NO. 0372

JosephG Jun 26, 2013 – 1:39pm G:\Current Projects\VTA-Berryessa Extension Project\Station – Milpitas\CAD\Drawings Out\13-0710 C700 Milpitas Station – RFC Submit\C700-S-DB-A201.dwg

Santa Clara Valley Transportation Authority

____NO EXCEPTIONS TAKEN (NET)
____MAKE CORRECTIONS NOTED (MCN)
____AMEND AND RESUBMIT (A/R)

Any action shown above is subject to the terms of the contract and does not relieve the Contractor of any of its obligations under the contract, including design and detailing.

Contract No.: DB11002F

By: _____ Date: _____

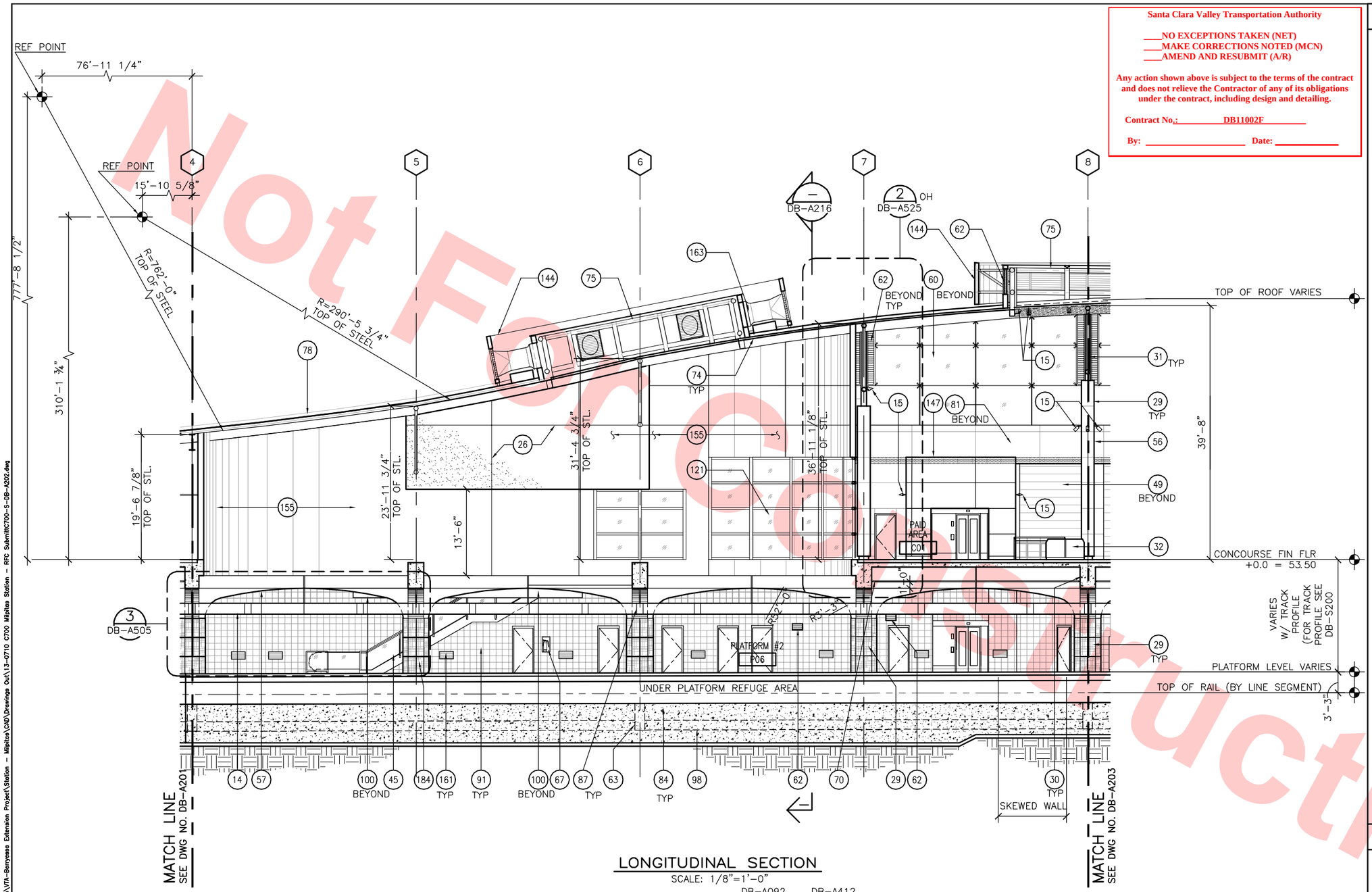

LONGITUDINAL SECTION

SCALE: 1/8"=1'-0"

DB-A092
DB-A112X
DB-A122X
DB-A142
DB-A200
DB-A402
DB-A412
DB-A421

KEY NOTES

14	SLPA – BFS SHTS AS44 & AS45
15	LIGHT FIXTURE
26	CEMENT PLASTER CONTROL JOINT
29	STRUCTURAL COLUMN
30	STRUCTURAL BEAM
31	STRUCTURAL MEMBER
32	FARE GATES, BFS SHT J005 & J006
45	GUARDRAIL ASSEMBLY – GLASS
49	OVERHEAD COILING GRILLE
56	METAL COLUMN COVER TO MATCH COMPOSITE WALL PANEL WP-1
57	ARCH PROFILE, REFER TO SHEET DB-A505
60	FRAMELESS GLASS WALL SYSTEM – TYPE 1
62	LOUVER
63	CATCH BASIN
67	FIRE EXTINGUISHER CABINET – SEE FIRE PROTECTION DRAWINGS
70	SUSPENDED LINEAR METAL CEILING
74	EXPOSED METAL DECK
75	HORIZONTAL STRUCTURAL POINT SUPPORTED GLASS SKYLIGHT SYSTEM
78	METAL ROOFING
81	COMPOSITE WALL PANEL WP-1, SEE DWG NO. DB-A701
84	MAT SLAB
87	ALUMINUM CLADDING FILL IN SECTION, SEE SIGNAGE DWGS
91	TILE
98	TRENCH DRAIN
100	SMOKE DRAFT STOP
121	FRAMELESS GLASS WALL SYSTEM – TYPE 2
144	WIND FENCE
147	METAL PANEL ACCENT BAND WP-1A, SEE DWG. NO. DB-A701
155	CEMENT PLASTER FINISH
161	LOW WALL VENT
163	SKYLIGHT SMOKE EVACUATION FAN
184	ART TILE–PROVIDED & INSTALLED BY OTHERS

KEY SECTION

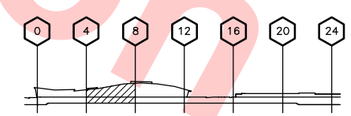

Not For Construction

REV	DATE	BY	SUB	APP	DESCRIPTION
0	20130710				READINESS FOR CONSTRUCTION

DESIGNED BY S. DEBNATH
DRAWN BY R. COLLADO
CHECKED BY E. BALLADA
IN CHARGE R. BARLAAN
DATE 20130710

LICENSED ARCHITECT SOMESH DEBNATH No. C21523 STATE OF CALIFORNIA

Skanska Shimmick Herzog
1436 California Circle
Milpitas, California 95035
A Joint Venture

Anil Verma Associates, Inc.
1970 Broadway, Suite 525, Oakland, CA 94612
Phone: (510) 835-2537 Fax: (510) 835-2339
SUBMITTED

Lockwood, Andrews & Newnam, Inc. | T-Y-LIN INTERNATIONAL
APPROVED

VTA BART SILICON VALLEY
BART SILICON VALLEY BERRYESSA EXTENSION

LINE, TRACK, STATIONS AND SYSTEMS
DESIGN UNIT 023
MILPITAS STATION

LONGITUDINAL SECTION
SHEET 2 OF 6

CADD FILENAME C700-S-DB-A202.dwg
SIZE D | SCALE 1/8"=1'-0"
CONTRACT NO. C700 | REV. 0
AREA CODE DB | SHEET NO. A202 | PAGE NO. 0373

Jun 26, 2013 – 1:39pm G:\Current Projects\VTA-Berryessa Extension Project\Station – Milpitas\CAD\Drawings Out\13-0710 C700 Milpitas Station – RFC Submit\C700-S-DB-A202.dwg
JoseyNG

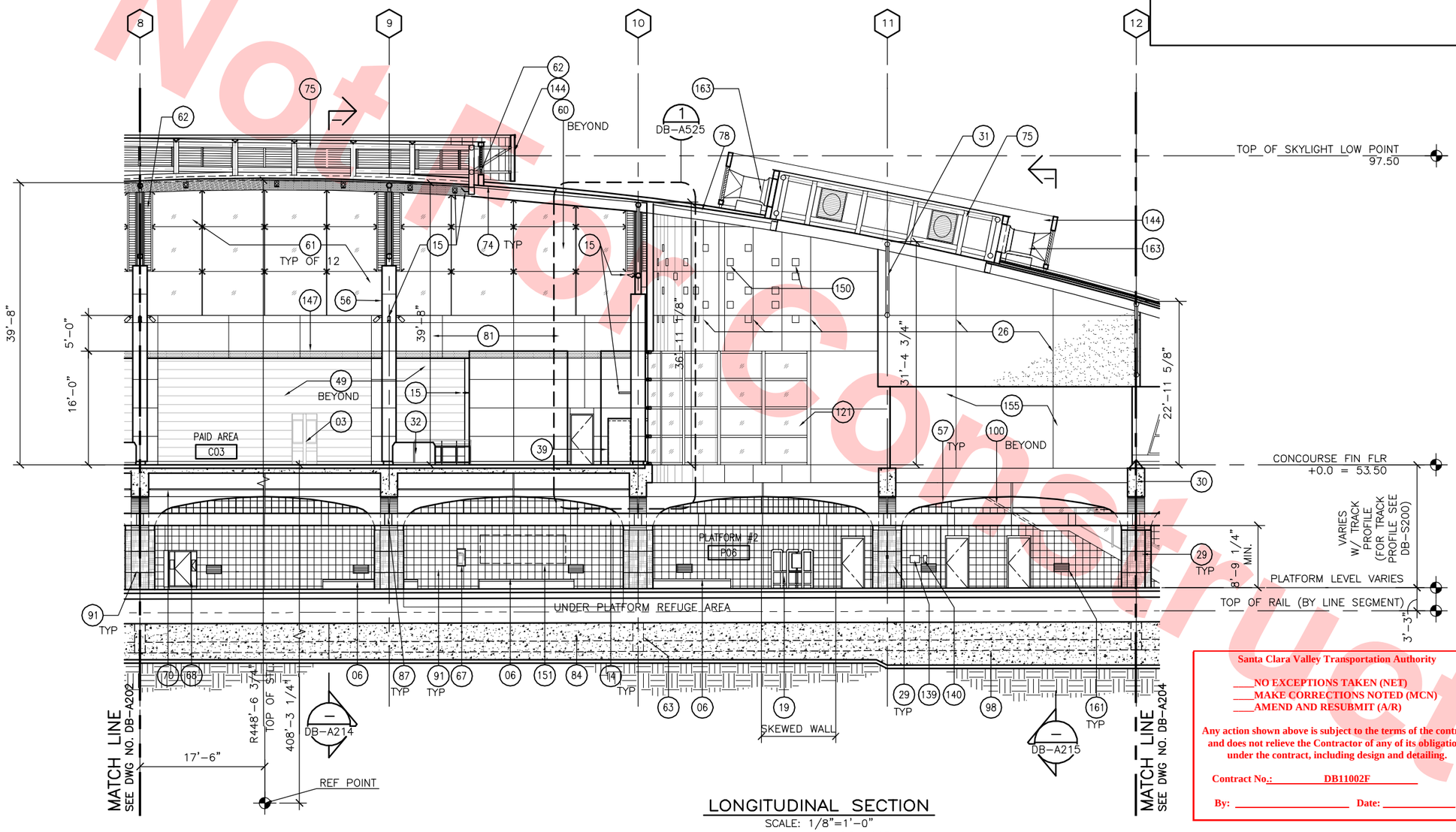

LONGITUDINAL SECTION

SCALE: 1/8"=1'-0"

DB-A093
DB-A113X
DB-A124X
DB-A144
DB-A200
DB-A403
DB-A414
DB-A423

KEY NOTES

- 150 COLORED GLASS BLOCK, MIX OF 4 COLORS
- 151 ADVERTISEMENT FRAME SPACE
- 155 CEMENT PLASTER FINISH
- 161 LOW WALL VENT
- 163 SKYLIGHT SMOKE EVACUATION FAN

- 03 INFO KIOSK – THREE-SIDED, BFS DET 1/AS85
- 06 BENCH
- 14 SLPA – BFS SHTS AS44 & AS45
- 15 LIGHT FIXTURE
- 19 PUBLIC PAY PHONE(S)
- 26 CEMENT PLASTER CONTROL JOINT
- 29 STRUCTURAL COLUMN
- 30 STRUCTURAL BEAM
- 31 STRUCTURAL MEMBER
- 32 FARE GATES, BFS SHT J005 & J006
- 38 ADD FARE/PARKING MACHINE, SEE BFS SHTS J001–J004
- 39 FUTURE ADD FARE/PARKING MACHINE
- 49 OVERHEAD COILING GRILLE
- 56 METAL COLUMN COVER TO MATCH COMPOSITE WALL PANEL WP–1
- 57 ARCH PROFILE, REFER TO SHEET DB–A505
- 60 FRAMELESS GLASS WALL SYSTEM TYPE 1
- 61 ART GLASS PANE (OWNER PROVIDED–CONTRACTOR INSTALLED)
- 62 LOUVER
- 63 CATCH BASIN
- 67 FIRE EXTINGUISHER CABINET – SEE FIRE PROTECTION DRAWINGS
- 68 FIRE HOSE CABINET – SEE FIRE PROTECTION DRAWINGS AND BFS SHEETS A65–AS67
- 70 SUSPENDED LINEAR METAL CEILING
- 74 EXPOSED METAL DECK
- 75 HORIZONTAL STRUCTURAL POINT SUPPORTED GLASS SKYLIGHT SYSTEM
- 78 METAL ROOFING
- 81 COMPOSITE WALL PANEL WP–1, SEE DWG NO. DB–A701
- 84 MAT SLAB
- 87 ALUMINUM CLADDING FILL IN SECTION, SEE SIGNAGE DWGS
- 91 TILE– OFCI
- 98 TRENCH DRAIN
- 100 SMOKE DRAFT STOP
- 121 GLASS WALL SYSTEM TYPE 2
- 139 PABX AND EMERGENCY TELEPHONE LOCKED BOX, SEE COMM DRAWINGS
- 140 FIRE TELEPHONE LOCKED BOX, SEE COMM DRAWINGS
- 144 WIND FENCE
- 147 METAL PANEL ACCENT BAND WP–1A, SEE DWG NO. DB–A701

KEY SECTION

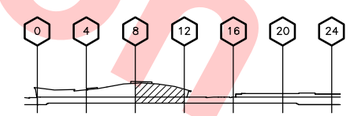

Santa Clara Valley Transportation Authority

____NO EXCEPTIONS TAKEN (NET)
____MAKE CORRECTIONS NOTED (MCN)
____AMEND AND RESUBMIT (A/R)

Any action shown above is subject to the terms of the contract and does not relieve the Contractor of any of its obligations under the contract, including design and detailing.

Contract No.: DB11002F

By: _____ Date: _____

Not For Construction

REV	DATE	BY	SUB	APP	DESCRIPTION
0	20130710				READINESS FOR CONSTRUCTION

DESIGNED BY S. DEBNATH
DRAWN BY R. COLLADO
CHECKED BY E. BALLADA
IN CHARGE R. BARLAAN
DATE 20130710

LICENSED ARCHITECT SOMESH DEBNATH No. C21523 STATE OF CALIFORNIA

Skanska Shimmick Herzog
1436 California Circle
Milpitas, California 95035
A Joint Venture

Anil Verma Associates, Inc.
1970 Broadway, Suite 525, Oakland, CA 94612
Phone: (510) 835-2537 Fax: (510) 835-2339

Lockwood, Andrews & Newnam, Inc. A LOCKWOOD, KONI JOINT VENTURE

T·Y·LIN INTERNATIONAL

SUBMITTED _____

APPROVED _____

VTA BART SILICON VALLEY

BART SILICON VALLEY BERRYESSA EXTENSION

LINE, TRACK, STATIONS AND SYSTEMS DESIGN UNIT 023
MILPITAS STATION

LONGITUDINAL SECTION
SHEET 3 OF 6

CADD FILENAME C700–S–DB–A203.dwg
SIZE D | SCALE 1/8"=1'–0"
CONTRACT NO. C700 | REV. 0
AREA CODE DB | SHEET NO. A203 | PAGE NO. 0374

Joseph G Jun 26, 2013 – 1:40pm G:\Current Projects\VTA-Berryessa Extension Project\Station – Milpitas\CAD\Drawings Out\13-0710 C700 Milpitas Station – RFC Submit\C700-S-DB-A203.dwg

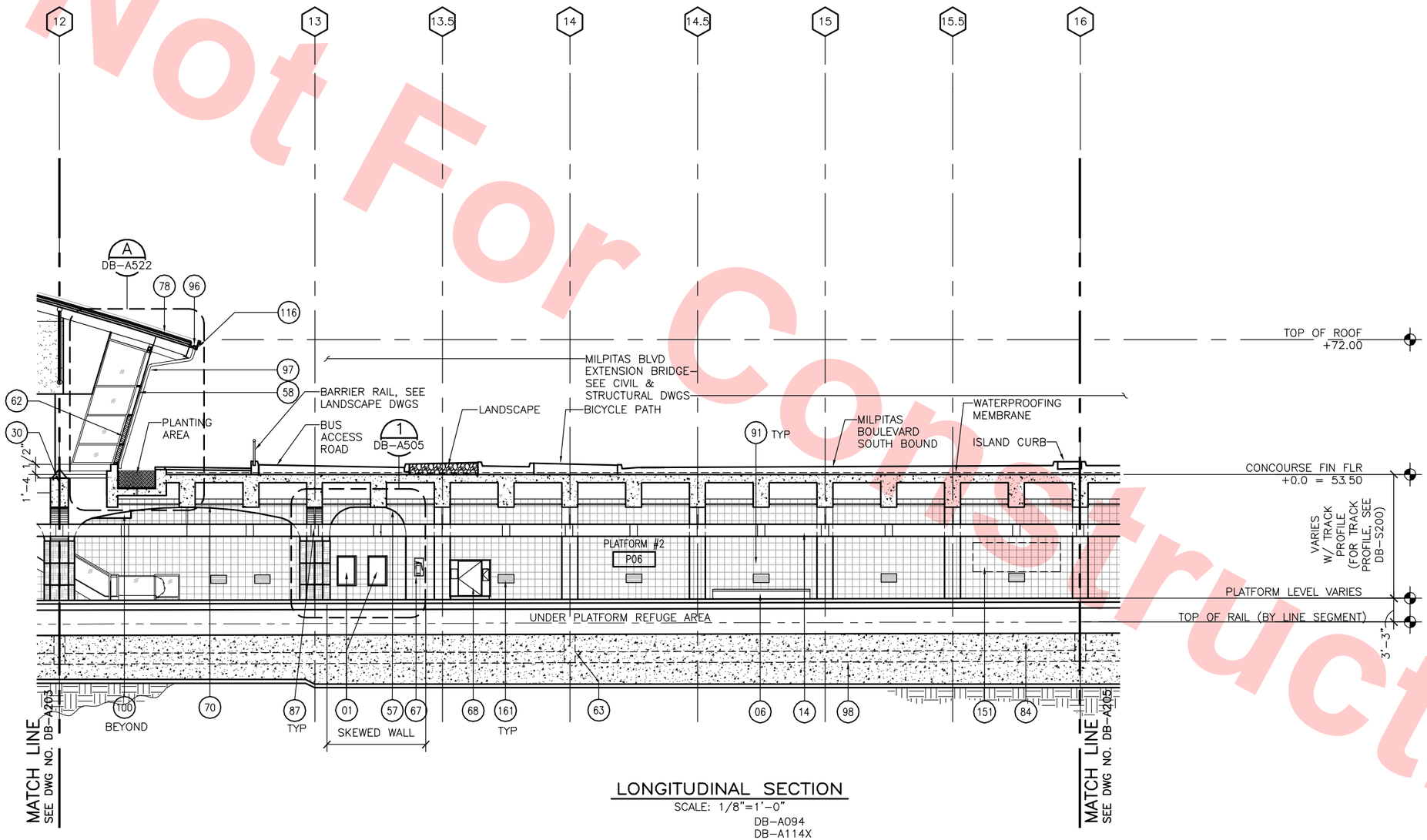

LONGITUDINAL SECTION

SCALE: 1/8"=1'–0"

DB–A094
DB–A114X
DB–A126X
DB–A200
DB–A404

KEY NOTES

- 01 MAP CASE – WALL–MOUNTED, BFS DET 4/AS83
- 06 BENCH
- 14 SLPA – BFS SHTS AS44 & AS45
- 30 STRUCTURAL BEAM
- 57 ARCH PROFILE, REFER TO SHEET DB–A505
- 58 GLASS WALL SYSTEM – TYPE 2
- 62 LOUVER
- 63 CATCH BASIN
- 67 FIRE EXTINGUISHER CABINET – SEE FIRE PROTECTION DRAWINGS
- 68 FIRE HOSE CABINET – SEE FIRE PROTECTION DRAWINGS AND BFS SHEETS AS65–AS67
- 70 SUSPENDED LINEAR METAL CEILING
- 78 METAL ROOFING
- 84 TRENCH INVERT SLAB
- 87 ALUMINUM CLADDING FILL IN SECTION, SEE SIGNAGE DWGS
- 91 TILE
- 96 GUTTER
- 97 DOWNSPOUT/RAINWATER LEADER
- 98 TRENCH DRAIN
- 100 SMOKE DRAFT STOP
- 116 ARCHITECTURAL METAL FASCIA
- 151 ADVERTISEMENT FRAME SPACE
- 161 LOW WALL VENT

Santa Clara Valley Transportation Authority

____NO EXCEPTIONS TAKEN (NET)
____MAKE CORRECTIONS NOTED (MCN)
____AMEND AND RESUBMIT (A/R)

Any action shown above is subject to the terms of the contract and does not relieve the Contractor of any of its obligations under the contract, including design and detailing.

Contract No.: DB11002F

By: _____ **Date:** _____

KEY SECTION

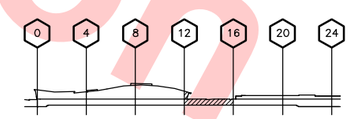

Not For Construction

REV	DATE	BY	SUB	APP	DESCRIPTION
0	20130710				READINESS FOR CONSTRUCTION

DESIGNED BY S. DEBNATH
DRAWN BY R. COLLADO
CHECKED BY E. BALLADA
IN CHARGE R. BARLAAN
DATE 20130710

LICENSED ARCHITECT SAMESH DEBNATH No. C21523 STATE OF CALIFORNIA

Skanska Shimmick Herzog
1436 California Circle
Milpitas, California 95035
A Joint Venture

Anil Verma Associates, Inc.
1970 Broadway, Suite 525 Oakland, CA 94612
Phone: (510) 835-2537 Fax: (510) 535-2339
SUBMITTED

Lockwood, Andrews & Newnam, Inc. A LAN & BALY COMPANY
T·Y·LIN INTERNATIONAL
APPROVED

VTA BART SILICON VALLEY
BART SILICON VALLEY BERRYESSA EXTENSION

LINE, TRACK, STATIONS AND SYSTEMS
DESIGN UNIT 023
MILPITAS STATION

LONGITUDINAL SECTION
SHEET 4 OF 6

CADD FILENAME C700–S–DB–A204.dwg
SIZE D | SCALE 1/8"=1'–0"
CONTRACT NO. C700 | REV. 0
AREA CODE DB | SHEET NO. A204 | PAGE NO. 0375

JosephG Jun 26, 2013 – 1:41pm G:\Current Projects\VTA–Berryessa Extension Project\Station – Milpitas\CAD\Drawings Out\13–0710 C700 Milpitas Station – RFC Submit\C700–S–DB–A204.dwg

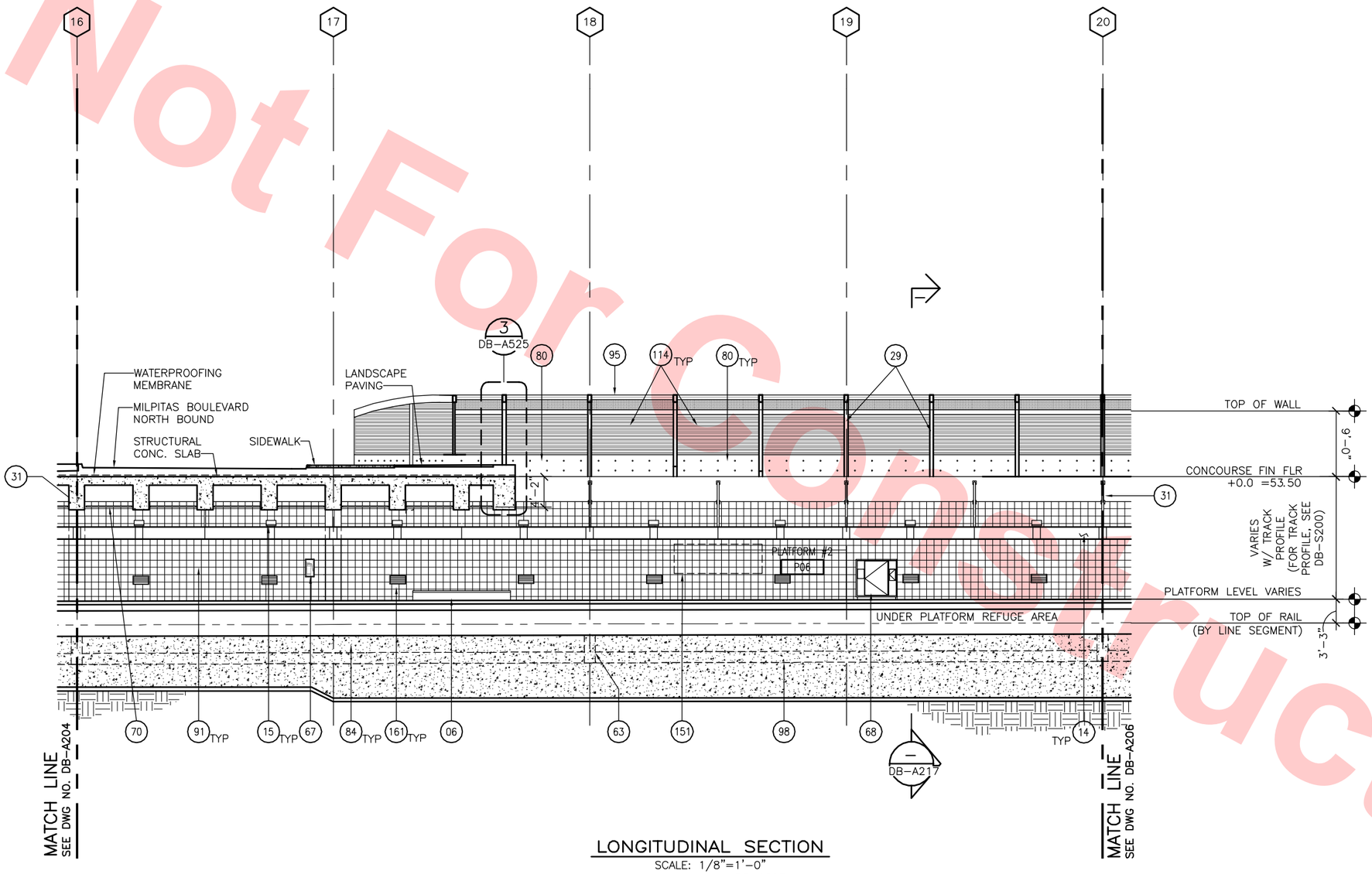

LONGITUDINAL SECTION

SCALE: 1/8"=1'–0"

DB–A095
DB–A115X
DB–A127X
DB–A147
DB–A200
DB–A405
DB–A417

KEY NOTES

- 06 BENCH
- 14 SLPA – BFS SHTS AS44 & AS45
- 15 LIGHT FIXTURE
- 29 STRUCTURAL COLUMN
- 31 STRUCTURAL MEMBER
- 63 CATCH BASIN
- 67 FIRE EXTINGUISHER CABINET – SEE FIRE PROTECTION DRAWINGS
- 68 FIRE HOSE CABINET W/DELUGE VALVE – SEE FIRE PROTECTION DRAWINGS AND DWGS AS65 TO AS67.
- 70 SUSPENDED LINEAR METAL CEILING
- 80 PRECAST ARCHITECTURAL CONCRETE WALL PANEL WP–3, SEE DWG NO. DB–A701
- 84 MAT SLAB
- 91 TILE
- 95 BIRD/SAFETY NETTING
- 98 TRENCH DRAIN
- 114 METAL WALL PANEL WP–2, SEE DWG NO. DB–A701
- 151 ADVERTISEMENT FRAME SPACE
- 161 LOW WALL VENT

Santa Clara Valley Transportation Authority

____NO EXCEPTIONS TAKEN (NET)
____MAKE CORRECTIONS NOTED (MCN)
____AMEND AND RESUBMIT (A/R)

Any action shown above is subject to the terms of the contract and does not relieve the Contractor of any of its obligations under the contract, including design and detailing.

Contract No.: DB11002F

By: _____ **Date:** _____

KEY SECTION

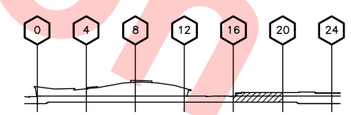

Not For Construction

REV	DATE	BY	SUB	APP	DESCRIPTION
0	20130710				READINESS FOR CONSTRUCTION

DESIGNED BY S. DEBNATH
DRAWN BY R. COLLADO
CHECKED BY E. BALLADA
IN CHARGE R. BARLAAN
DATE 20130710

LICENSED ARCHITECT SOMESH DEBNATH No. C21523 STATE OF CALIFORNIA

Skanska Shimmick Herzog
1436 California Circle
Milpitas, California 95035
A Joint Venture

Anil Verma Associates, Inc.
1970 Broadway, Suite 525 Oakland, CA 94612
Phone: (510) 835-2337 Fax: (510) 835-2339
SUBMITTED

Lockwood, Andrews & Newnam, Inc. A LAN & BAYH COMPANY
T·Y·LIN INTERNATIONAL
APPROVED

VTA BART SILICON VALLEY
BART SILICON VALLEY BERRYESSA EXTENSION

LINE, TRACK, STATIONS AND SYSTEMS
DESIGN UNIT 023
MILPITAS STATION

LONGITUDINAL SECTION
SHEET 5 OF 6

CADD FILENAME C700–S–DB–A205.dwg
SIZE D | SCALE 1/8"=1'–0"
CONTRACT NO. C700 | REV. 0
AREA CODE DB | SHEET NO. A205 | PAGE NO. 0376

JosephG Jun 26, 2013 – 1:41pm G:\Current Projects\VTA–Berryessa Extension Project\Station – Milpitas\CAD\Drawings Out\13–0710 C700 Milpitas Station – RFC Submitt\C700–S–DB–A205.dwg

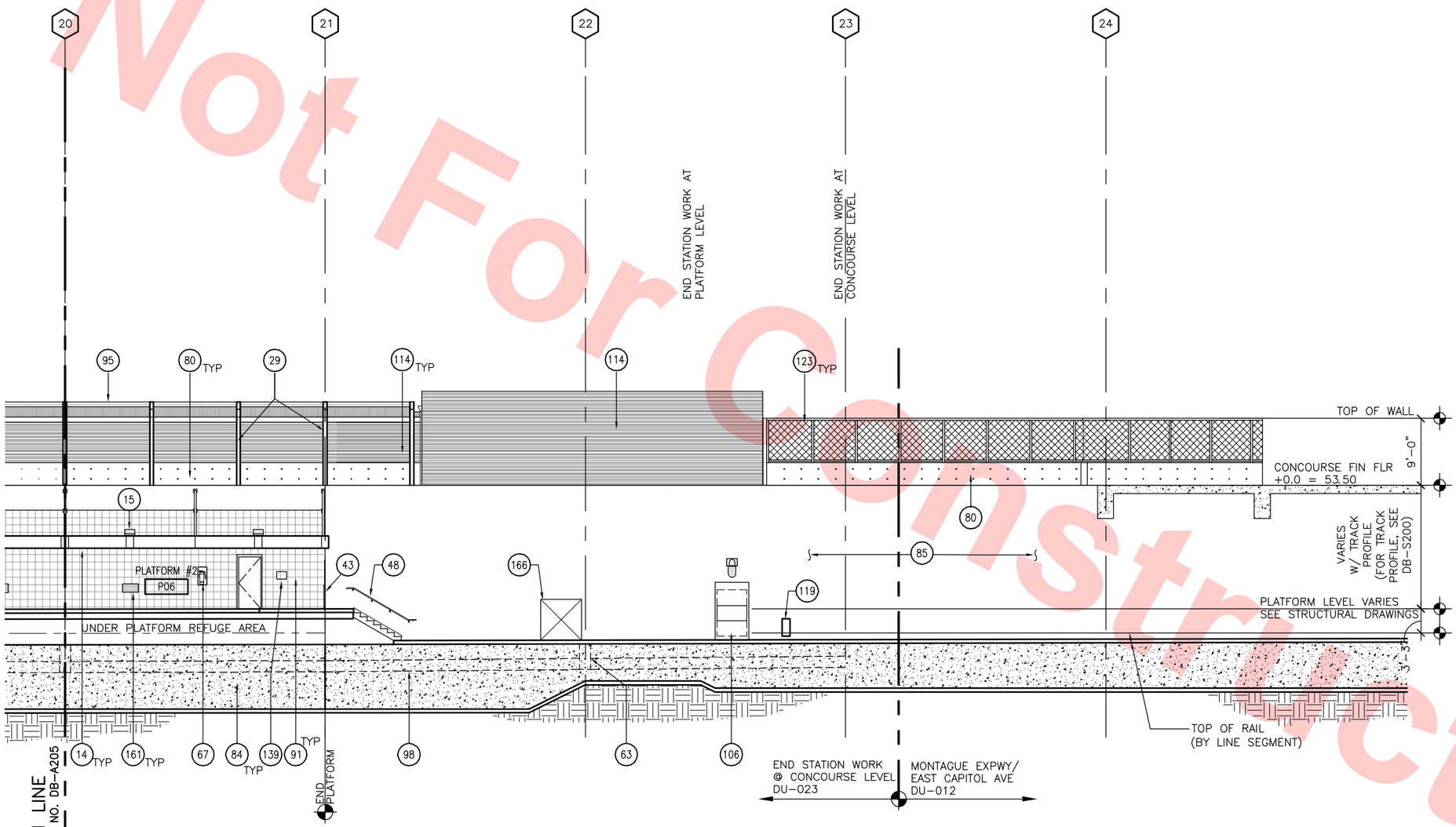

LONGITUDINAL SECTION

SCALE: 1/8"=1'-0"

DB-A096
DB-A116X
DB-A128X
DB-A148
DB-A200
DB-A406
DB-A418

KEY NOTES

- 14 SLPA – BFS SHTS AS44 & AS45
- 15 LIGHT FIXTURE
- 29 STRUCTURAL COLUMN
- 43 END-OF-PLATFORM GATE WITH LATCHING POST, SEE BFS DET 1/AS70, SIM
- 48 HANDRAIL – METAL
- 63 CATCH BASIN
- 67 FIRE EXTIGUISHER CABINET, SEE FIRE PROTECTION DRAWINGS
- 80 PRECAST ARCHITECTURAL CONCRETE WALL PANEL WP-3, SEE DWG NO. DB-A701
- 84 TRENCH INVERT SLAB
- 85 RETAINING WALL
- 91 TILE
- 95 BIRD/SAFETY NETTING
- 98 TRENCH DRAIN
- 106 BLUE LIGHT ALCOVE
- 114 METAL WALL PANEL WP-2, SEE DWG NO. DB-A701
- 119 FIRE EXTINGUISHER NICHE
- 123 WIRE FENCE
- 139 PABX AND EMERGENCY TELEPHONE LOCKED BOX, SEE COMM DRAWINGS
- 161 LOW WALL VENT
- 166 RAIL LUBRICATOR

Santa Clara Valley Transportation Authority

____NO EXCEPTIONS TAKEN (NET)
____MAKE CORRECTIONS NOTED (MCN)
____AMEND AND RESUBMIT (A/R)

Any action shown above is subject to the terms of the contract and does not relieve the Contractor of any of its obligations under the contract, including design and detailing.

Contract No.: DB11002F

By: _____ **Date:** _____

KEY SECTION

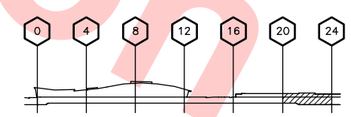

Not For Construction

REV	DATE	BY	SUB	APP	DESCRIPTION
0	20130710				READINESS FOR CONSTRUCTION

DESIGNED BY S. DEBNATH
DRAWN BY R. COLLADO
CHECKED BY E. BALLADA
IN CHARGE R. BARLAAN
DATE 20130710

LICENSED ARCHITECT SOMESH DEBNATH No. C21523 STATE OF CALIFORNIA

Skanska Shimmick Herzog
1436 California Circle
Milpitas, California 95035
A Joint Venture

Anil Verma Associates, Inc.
1970 Broadway, Suite 325, Oakland, CA 94612
Phone: (510) 835-2537 Fax: (510) 835-2339

Lockwood, Andrews & Newnam, Inc. A CH2M HILL COMPANY

T·Y·LIN INTERNATIONAL

SUBMITTED _____

APPROVED _____

VTA BART SILICON VALLEY

BART SILICON VALLEY BERRYESSA EXTENSION

LINE, TRACK, STATIONS AND SYSTEMS
DESIGN UNIT 023
MILPITAS STATION

LONGITUDINAL SECTION
SHEET 6 OF 6

CADD FILENAME C700-S-DB-A206.dwg
SIZE D | SCALE 1/8"=1'-0"
CONTRACT NO. C700 | REV. 0
AREA CODE DB | SHEET NO. A206 | PAGE NO. 0377

JosephG Jun 26, 2013 – 1:42pm G:\Current Projects\VTA-Berryessa Extension Project\Station – Milpitas\CAD\Drawings Out\13-0710 C700 Milpitas Station – RFC Submittal\C700-S-DB-A206.dwg

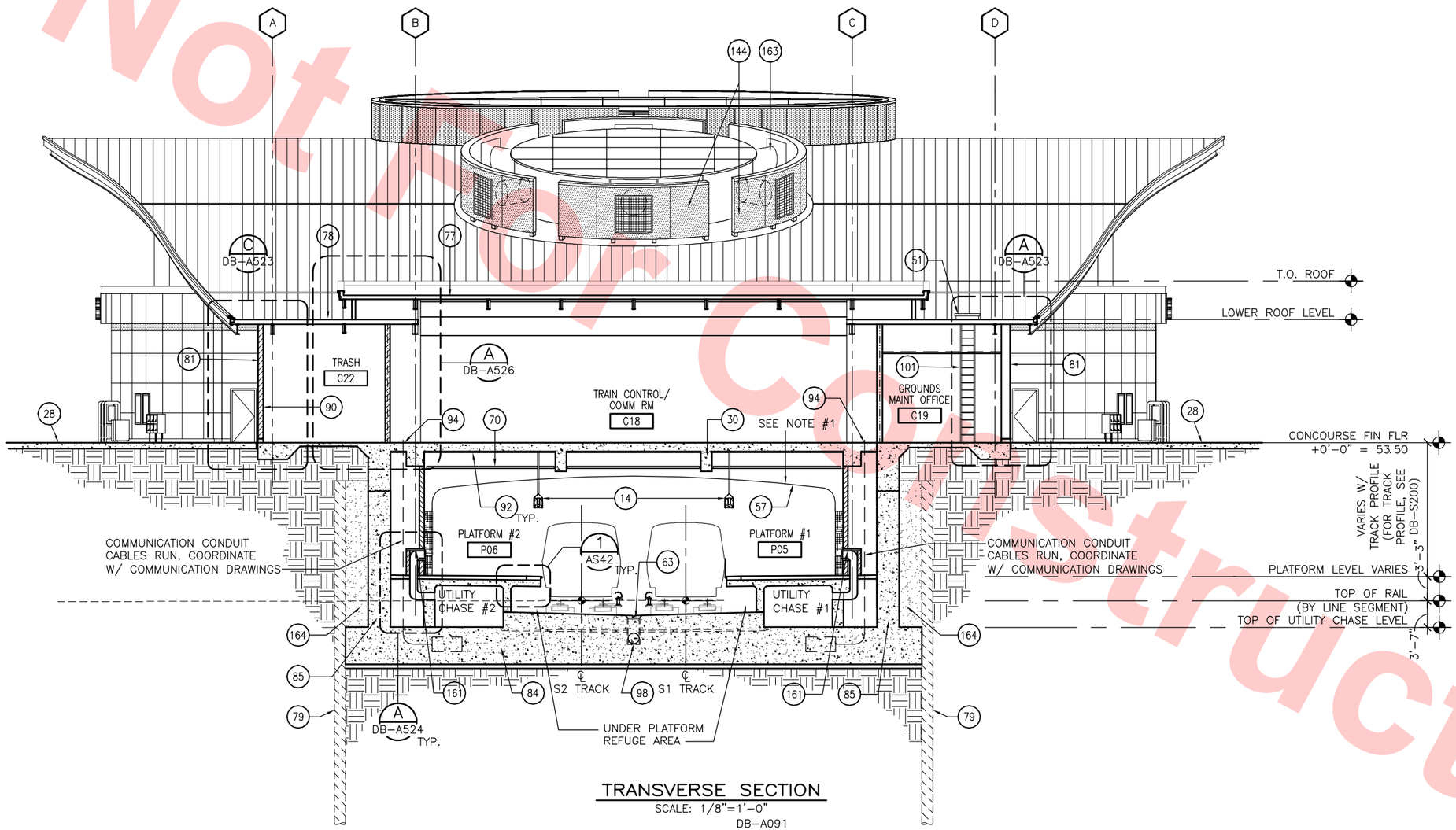

TRANSVERSE SECTION

SCALE: 1/8"=1'–0"

DB–A091
DB–A111X
DB–A121X
DB–A141
DB–A201
DB–A401
DB–A411

KEY NOTES

- (14) SLPA – BFS SHTS AS44 & AS45
- (28) HARDSCAPE PAVING – SEE LANDSCAPE DRAWINGS
- (30) STRUCTURAL BEAM
- (51) ACCESS HATCH, SEE DETAIL 8/DB–A599
- (57) ARCH PROFILE, REFER TO SHEET DB–A505
- (63) CATCH BASIN
- (70) SUSPENDED LINEAR METAL CEILING
- (77) MEMBRANE ROOFING
- (78) METAL ROOFING
- (79) SHORING WALL
- (81) COMPOSITE WALL PANEL WP–1, SEE DWG NO. DB–A701
- (84) MAT SLAB
- (85) RETAINING WALL
- (90) CMU WALL
- (92) THERMAL INSULATION R–13
- (94) PROVIDE PIPE SLEEVES IN FLOOR SLAB. SIZE, SPACING AND NO. AS REQ'D. EXTEND PIPE SLEEVES 18" AFF. REFER TO COMMUNICATION DRAWING
- (98) TRENCH DRAIN
- (101) FIXED LADDER
- (144) WIND FENCE
- (161) LOW WALL VENTS
- (163) SKYLIGHT SMOKE EVACUATION FAN
- (164) CONCRETE SLURRY SEE STRUCTURAL DRAWINGS

NOTES

1. FOR ARCH PROFILE, REFER TO SHEET DB–A505

Santa Clara Valley Transportation Authority

____NO EXCEPTIONS TAKEN (NET)
____MAKE CORRECTIONS NOTED (MCN)
____AMEND AND RESUBMIT (A/R)

Any action shown above is subject to the terms of the contract and does not relieve the Contractor of any of its obligations under the contract, including design and detailing.

Contract No.: DB11002F

By: _____ Date: _____

Not For Construction

REV	DATE	BY	SUB	APP	DESCRIPTION
0	20130710				READINESS FOR CONSTRUCTION

DESIGNED BY S. DEBNATH
DRAWN BY R. COLLADO
CHECKED BY E. BALLADA
IN CHARGE R. BARLAAN
DATE 20130710

LICENSED ARCHITECT SOMESH DEBNATH No. C21523 STATE OF CALIFORNIA

Skanska Shimmick Herzog
1436 California Circle
Milpitas, California 95035
A Joint Venture

Anil Verma Associates, Inc.
1970 Broadway, Suite 525, Oakland, CA 94612
Phone: (510) 835-2537 Fax: (510) 535-2339

Lockwood, Andrews & Newnam, Inc. A LAN & BAM COMPANY

T·Y·LIN INTERNATIONAL

SUBMITTED _____ APPROVED _____

VTA BART SILICON VALLEY

BART SILICON VALLEY BERRYESSA EXTENSION

LINE, TRACK, STATIONS AND SYSTEMS
DESIGN UNIT 023
MILPITAS STATION

TRANSVERSE SECTION
SHEET 1 OF 7

CADD FILENAME C700–S–DB–A211.dwg
SIZE D | SCALE 1/8"=1'–0"
CONTRACT NO. C700 | REV. 0
AREA CODE DB | SHEET NO. A211 | PAGE NO. 0378

JosephG Jun 26, 2013 – 1:42pm G:\Current Projects\VTA–Berryessa Extension Project\Station – Milpitas\CAD\Drawings Out\13–0710 C700 Milpitas Station – RFC Submitt\C700–S–DB–A211.dwg

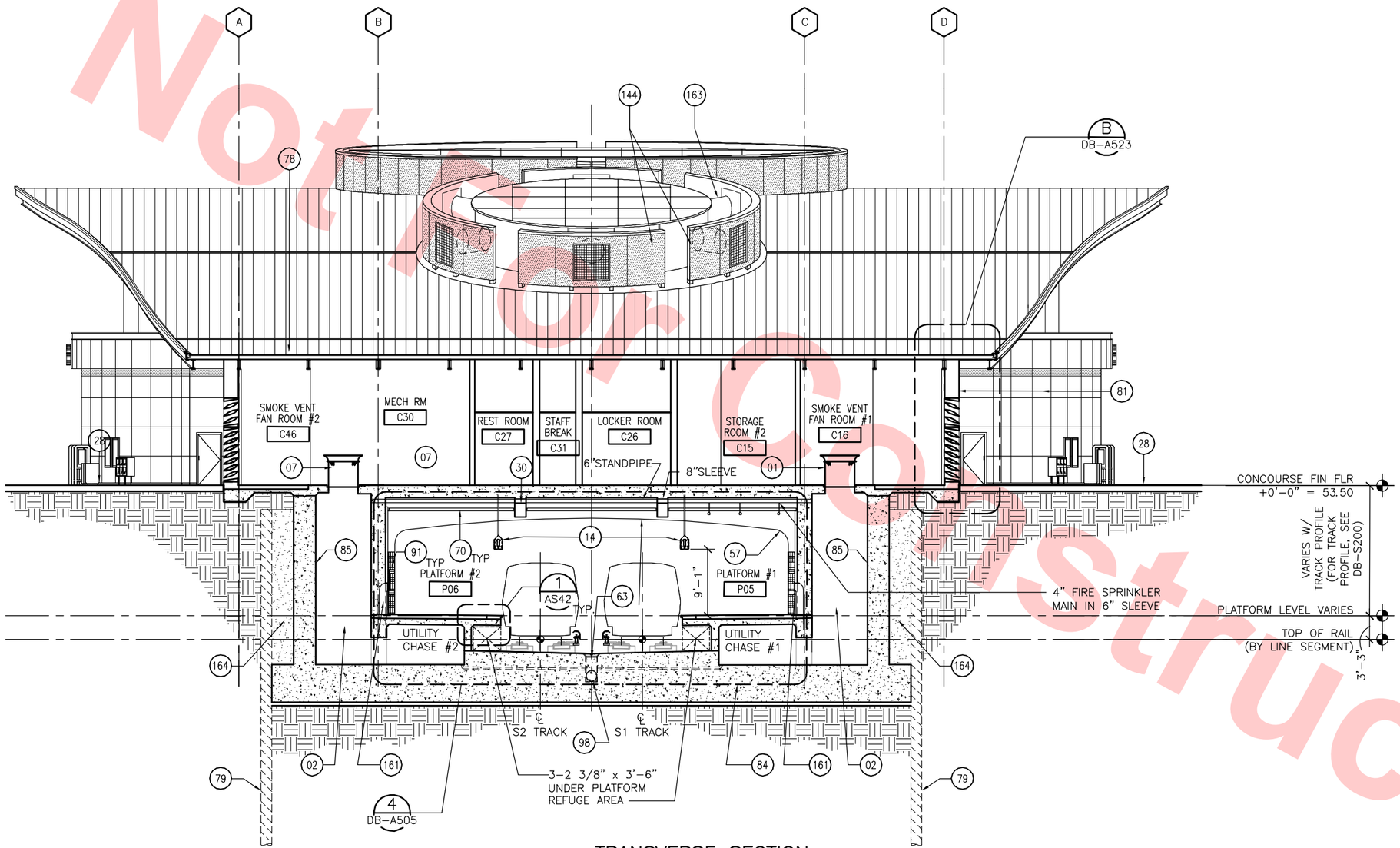

TRANSVERSE SECTION

SCALE: 1/8"=1'-0"

DB-A091
DB-A111X
DB-A121X
DB-A141
DB-A201
DB-A301
DB-A316X
DB-A401
DB-A411

KEY NOTES

- 01 SMOKE EVACUATION FAN
- 02 SUPPLY AIR RISER FROM CONCOURSE LEVEL DOWN TO UTILITY CHASE
- 14 SLPA – BFS SHTS AS44 & AS45
- 28 HARDSCAPE PAVING – SEE LANDSCAPE DRAWINGS
- 30 STRUCTURAL BEAM, SEE STRUCTURAL DWGS.
- 57 ARCH PROFILE, REFER TO SHEET DB–A505
- 63 CATCH BASIN
- 70 SUSPENDED LINEAR METAL CEILING
- 78 METAL ROOFING
- 79 SHORING WALL
- 81 COMPOSITE WALL PANEL WP–1, SEE DWG NO. DB–A701
- 84 MAT SLAB
- 85 RETAINING WALL, SEE STRUCTURAL DWGS.
- 90 CMU WALL, SEE STRUCTURAL DWGS.
- 98 TRENCH DRAIN
- 144 WIND FENCE (COMPOSITE PANEL).
- 161 LOW WALL VENTS, SEE DWG. NO. DB–A524
- 163 SKYLIGHT SMOKE EVACUATION FAN
- 164 CONCRETE SLURRY, SEE STRUCTURAL DWGS.

Santa Clara Valley Transportation Authority

____NO EXCEPTIONS TAKEN (NET)
____MAKE CORRECTIONS NOTED (MCN)
____AMEND AND RESUBMIT (A/R)

Any action shown above is subject to the terms of the contract and does not relieve the Contractor of any of its obligations under the contract, including design and detailing.

Contract No.: DB11002F

By: _____ **Date:** _____

Not For Construction

REV	DATE	BY	SUB	APP	DESCRIPTION
0	20130710				READINESS FOR CONSTRUCTION

DESIGNED BY S. DEBNATH
DRAWN BY R. COLLADO
CHECKED BY E. BALLADA
IN CHARGE R. BARLAAN
DATE 20130710

LICENSED ARCHITECT SOMESH DEBNATH No. C21523 STATE OF CALIFORNIA

Skanska Shimmick Herzog
1436 California Circle
Milpitas, California 95035
A Joint Venture

SUBMITTED Anil Verma Associates, Inc. 1970 Broadway, Suite 525, Oakland, CA 94612 Phone: (510) 835-2337 Fax: (510) 835-2339

APPROVED Lockwood, Andrews & Newnam, Inc. A LAN & BAH COMPANY / T-Y-LIN INTERNATIONAL

VTA BART SILICON VALLEY
BART SILICON VALLEY BERRYESSA EXTENSION

LINE, TRACK, STATIONS AND SYSTEMS
DESIGN UNIT 023
MILPITAS STATION

TRANSVERSE SECTION
SHEET 2 OF 7

CADD FILENAME C700–S–DB–A212.dwg
SIZE D | SCALE 1/8"=1'-0"
CONTRACT NO. C700 | REV. 0
AREA CODE DB | SHEET NO. A212 | PAGE NO. 0379

JosephG Jun 26, 2013 – 1:43pm G:\Current Projects\VTA–Berryessa Extension Project\Station – Milpitas\CAD\Drawings Out\13–0710 C700 Milpitas Station – RFC Submit\C700–S–DB–A212.dwg

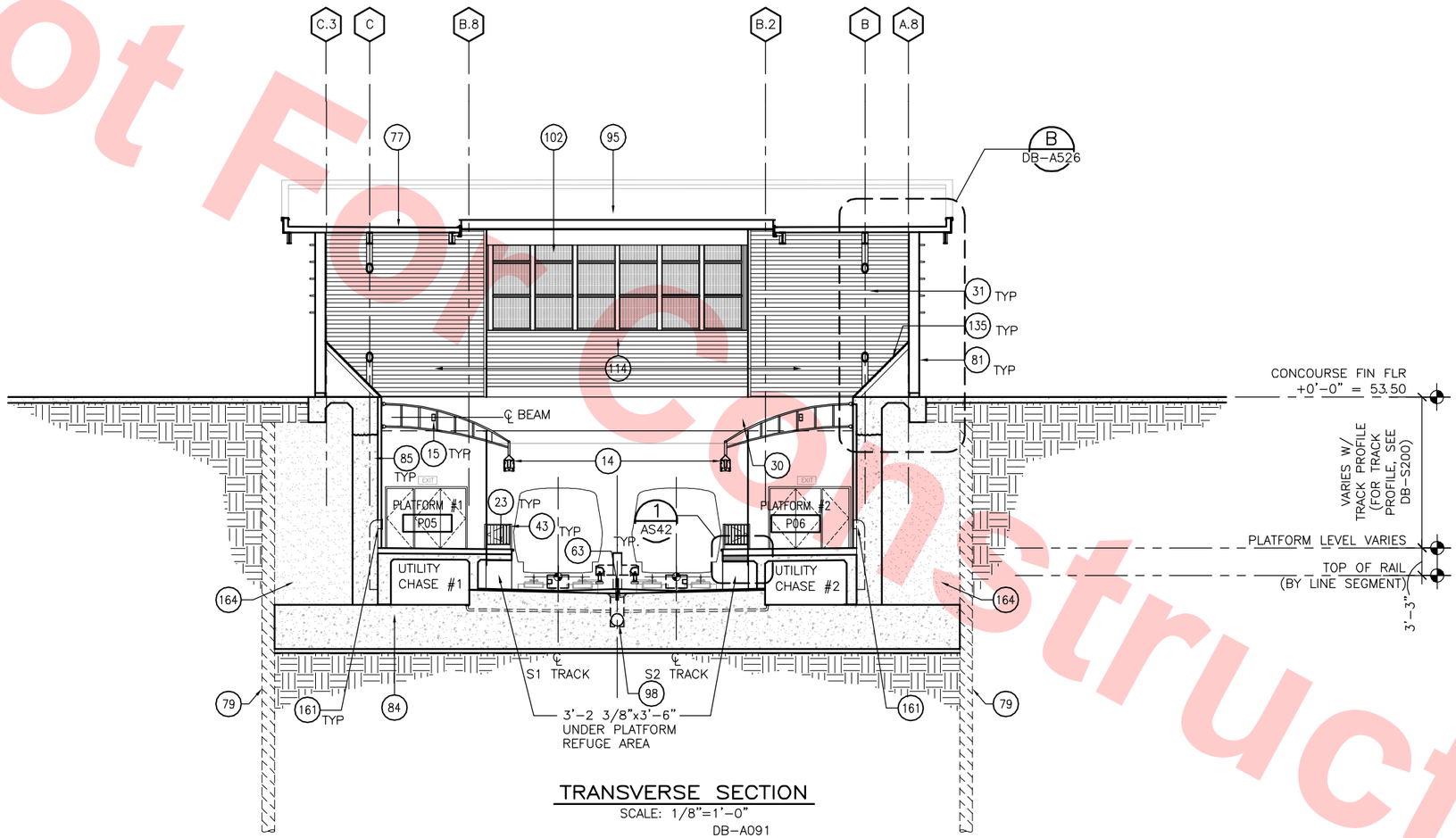

TRANSVERSE SECTION

SCALE: 1/8"=1'-0"

DB-A091
DB-A111X
DB-A121X
DB-A141
DB-A201
DB-A301
DB-A401
DB-A411

KEY NOTES

- (14) SLPA – SEE BFS SHTS AS44, AS45 AND SEE ELEC/COMM/SECURITY DWGS.
- (15) LIGHT FIXTURE
- (23) TACTILE WARNING BAND, BFS DET 5/AS42
- (30) STRUCTURAL BEAM
- (31) STRUCTURAL MEMBER
- (43) END-OF-PLATFORM GATE WITH LATCHING POST, SEE BFS DET 1/AS70, SIM
- (63) CATCH BASIN
- (77) MEMBRANE ROOFING
- (79) SHORING WALL
- (81) COMPOSITE WALL PANEL WP-1, SEE DWG NO. DB-A701
- (84) MAT SLAB
- (85) RETAINING WALL
- (95) BIRD/SAFETY NETTING
- (98) TRENCH DRAIN
- (102) DECORATIVE SS MESH
- (114) METAL WALL PANEL WP-2, SEE DWG NO. DB-A701
- (135) SHEET COVER
- (161) LOW WALL VENTS
- (164) CONCRETE SLURRY SEE STRUCTURAL DRAWINGS

Santa Clara Valley Transportation Authority

____NO EXCEPTIONS TAKEN (NET)
____MAKE CORRECTIONS NOTED (MCN)
____AMEND AND RESUBMIT (A/R)

Any action shown above is subject to the terms of the contract and does not relieve the Contractor of any of its obligations under the contract, including design and detailing.

Contract No.: DB11002F

By: _____ Date: _____

Not For Construction

REV	DATE	BY	SUB	APP	DESCRIPTION
0	20130710				READINESS FOR CONSTRUCTION

DESIGNED BY S. DEBNATH
DRAWN BY R. COLLADO
CHECKED BY E. BALLADA
IN CHARGE R. BARLAAN
DATE 20130710

LICENSED ARCHITECT JAMESH DEBNATH No. C21523 STATE OF CALIFORNIA

Skanska Shimmick Herzog
1436 California Circle
Milpitas, California 95035
A Joint Venture

Anil Verma Associates, Inc.
1970 Broadway, Suite 535 Oakland, CA 94612
Phone: (510) 835-2537 Fax: (510) 535-2339
SUBMITTED

Lockwood, Andrews & Newnam, Inc. A LAN & BALY COMPANY
T·Y·LIN INTERNATIONAL
APPROVED

VTA BART SILICON VALLEY
BART SILICON VALLEY BERRYESSA EXTENSION

LINE, TRACK, STATIONS AND SYSTEMS
DESIGN UNIT 023
MILPITAS STATION

TRANSVERSE SECTION
SHEET 3 OF 7

CADD FILENAME C700-S-DB-A213.dwg
SIZE D | SCALE 1/8"=1'-0"
CONTRACT NO. C700 | REV. 0
AREA CODE DB | SHEET NO. A213 | PAGE NO. 0380

JosephG Jun 26, 2013 – 1:43pm G:\Current Projects\VTA-Berryessa Extension Project\Station – Milpitas\CAD\Drawings Out\13-0710 C700 Milpitas Station – RFC Submit\C700-S-DB-A213.dwg

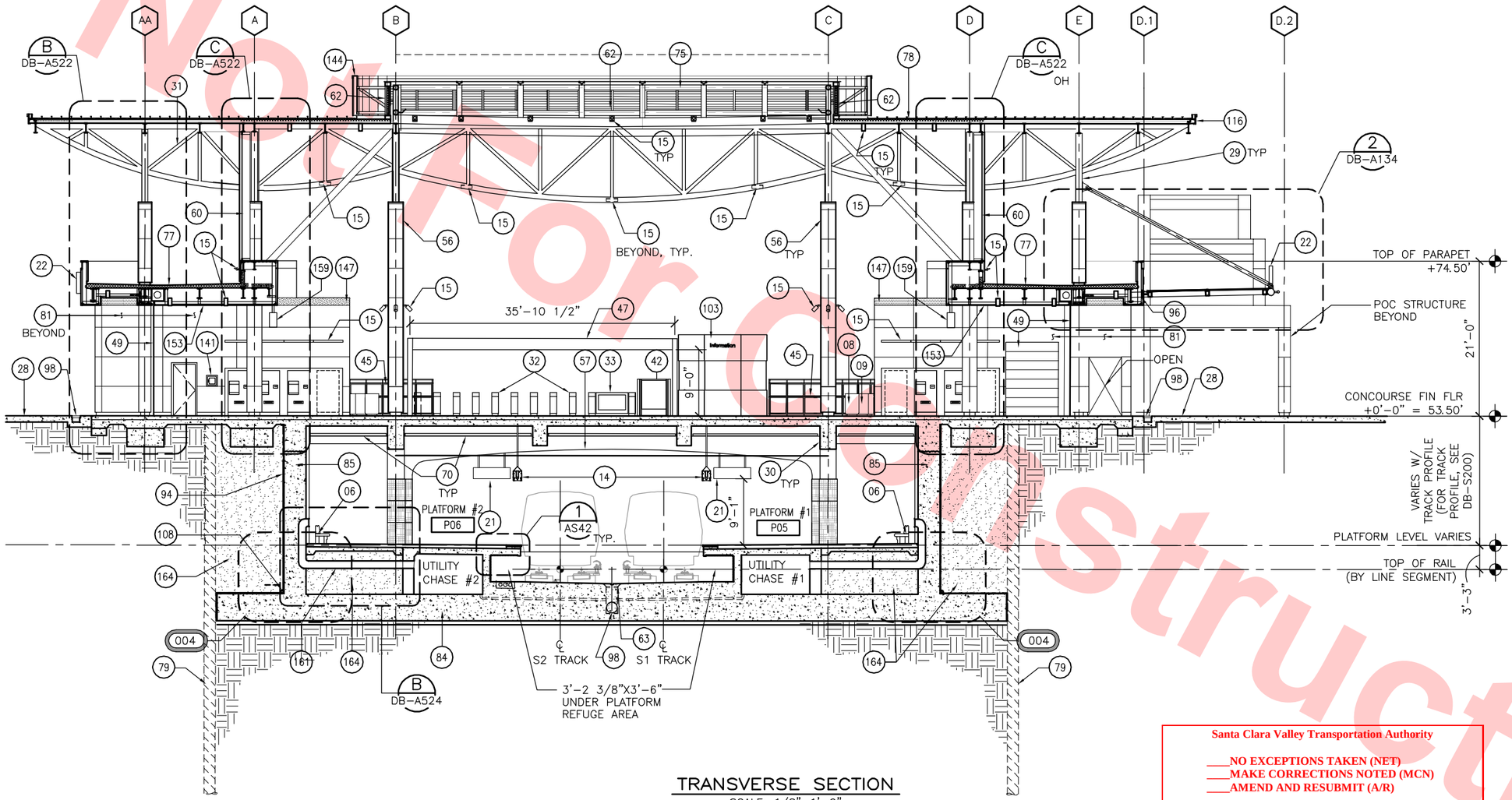

TRANSVERSE SECTION

SCALE: 1/8"=1'–0"

DB–A093
DB–A113X
DB–A124X
DB–A125X
DB–A131
DB–A132
DB–A144
DB–A145
DB–A203
DB–A303
DB–A314
DB–A403
DB–A414
DB–A415
DB–A423
DB–A424

Santa Clara Valley Transportation Authority

____NO EXCEPTIONS TAKEN (NET)
____MAKE CORRECTIONS NOTED (MCN)
____AMEND AND RESUBMIT (A/R)

Any action shown above is subject to the terms of the contract and does not relieve the Contractor of any of its obligations under the contract, including design and detailing.

Contract No.: DB11002F

By: _____ **Date:** _____

KEY NOTES

06 BENCH, SEE DETAIL 6/DB–A605
08 TRASH RECEPTACLE
09 NEWSPAPER RECYCLING RECEPTACLE, NIC
14 SLPA – BFS SHTS AS44 & AS45
15 LIGHT FIXTURE
21 DESTINATION SIGN UNIT, SEE SYSTEMS DWGS
22 SIGN (REFER TO SIGNAGE DRAWINGS)
28 HARDSCAPE PAVING – SEE LANDSCAPE DRAWINGS
29 STRUCTURAL COLUMN
30 STRUCTURAL BEAM
31 STRUCTURAL MEMBER
32 FARE GATES, BFS SHT F005 & F006
33 ACCESSIBLE FARE GATE, PER BFS
42 SERVICE GATE, BFS DET 1/AS70
45 GUARDRAIL ASSEMBLY– GLASS
47 WAYFINDING SIGN SUPPORT
49 OVERHEAD COILING GRILLE
56 METAL COLUMN COVER TO MATCH COMPOSITE WALL PANEL WP–1
57 ARCH PROFILE, REFER TO SHEET DB–A505
60 FRAMELESS GLASS WALL SYSTEM TYPE 1
62 LOUVER
63 CATCH BASIN
70 SUSPENDED LINEAR METAL CEILING
75 HORIZONTAL STRUCTURAL POINT SUPPORTED GLASS SKYLIGHT SYSTEM
77 MEMBRANE ROOFING
78 METAL ROOFING
79 SHORING WALL
81 COMPOSITE WALL PANEL WP–1, SEE DWG NO. DB–A701
84 MAT SLAB
85 RETAINING WALL
94 WATERPROOFING MEMBRANE
96 GUTTER
98 TRENCH DRAIN, SEE DETAIL 5/DB–A605
103 STATION AGENT'S BOOTH PER BFS
108 PERFORATED PERIMETER DRAIN
116 ARCHITECTURAL METAL FASCIA
141 RECESSED DEFIBRILLATOR CABINET
144 WIND FENCE
147 METAL PANEL ACCENT BAND WP–1A, SEE DWG NO. DB–A701
153 SUSPENDED DECORATIVE PANEL CEILING
159 VARIABLE MESSAGE SIGN (TRAIN INFORMATION MONITOR)
161 LOW WALL VENTS AND VENT DUCT, SEE DWG. NO. DB–A524
164 CONCRETE SLURRY SEE STRUCTURAL DRAWINGS

Not For Construction

REV	DATE	BY	SUB	APP	DESCRIPTION
0	20130710				READINESS FOR CONSTRUCTION

DESIGNED BY S. DEBNATH
DRAWN BY R. COLLADO
CHECKED BY E. BALLADA
IN CHARGE R. BARLAAN
DATE 20130710

LICENSED ARCHITECT SOMESH DEBNATH No. C21523 STATE OF CALIFORNIA

Skanska Shimmick Herzog
1436 California Circle
Milpitas, California 95035
A Joint Venture

Anil Verma Associates, Inc.
1970 Broadway, Suite 535
Oakland, CA 94612
Phone: (510) 835-2537 Fax: (510) 835-2339
SUBMITTED

Lockwood, Andrews & Newnam, Inc. A LEO A DALY COMPANY
T·Y·LIN INTERNATIONAL
APPROVED

VTA BART SILICON VALLEY
BART SILICON VALLEY BERRYESSA EXTENSION

LINE, TRACK, STATIONS AND SYSTEMS DESIGN UNIT 023
MILPITAS STATION

TRANSVERSE SECTION
SHEET 4 OF 7

CADD FILENAME C700–S–DB–A214.dwg
SIZE D | SCALE 1/8"=1'–0"
CONTRACT NO. C700 | REV. 0
AREA CODE DB | SHEET NO. A214 | PAGE NO. 0381

JosephG Jun 26, 2013 – 1:44pm G:\Current Projects\VTA–Berryessa Extension Project\Station – Milpitas\CAD\Drawings Out\13–0710 C700 Milpitas Station – RFC Submit\C700–S–DB–A214.dwg

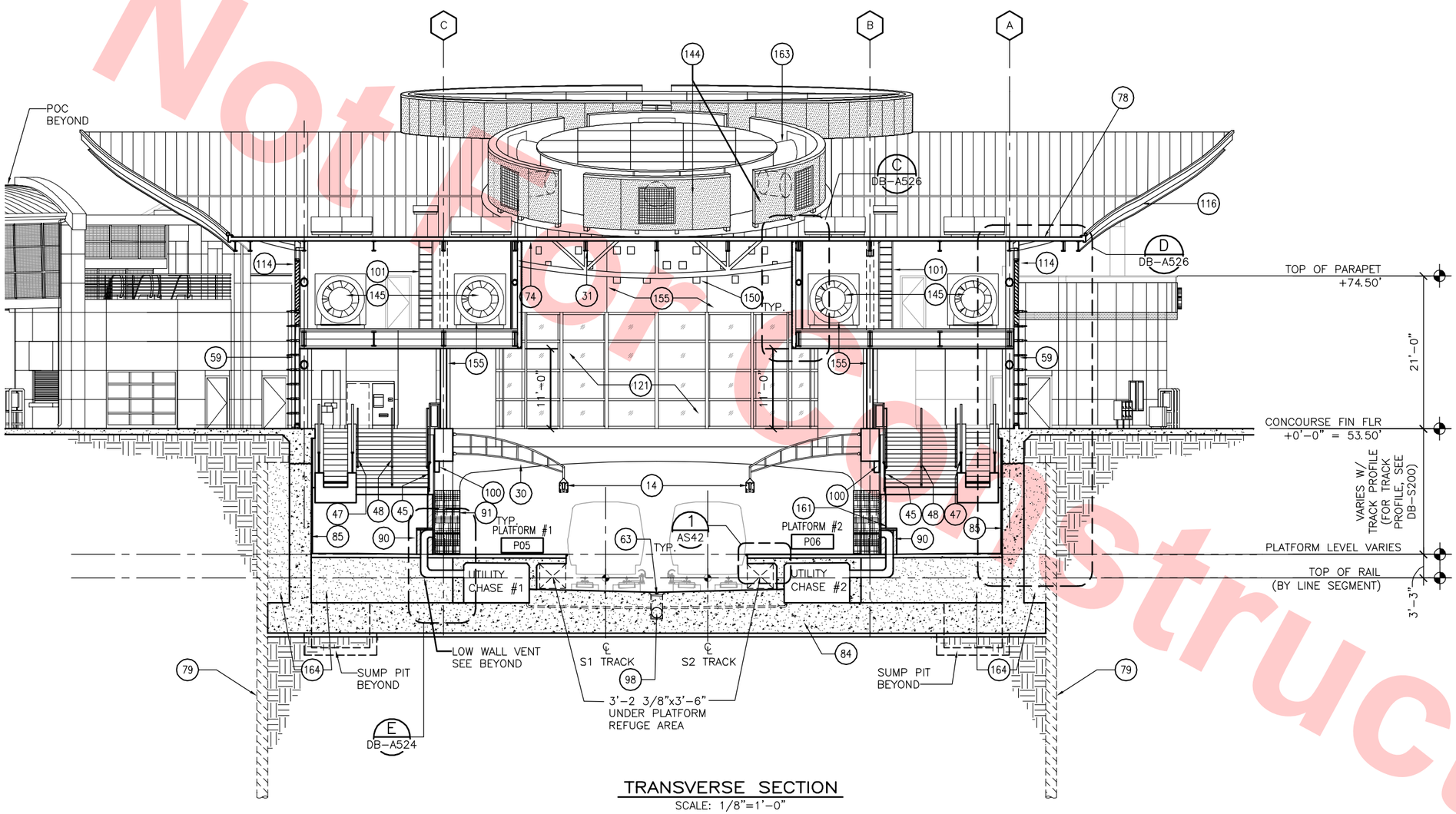

TRANSVERSE SECTION

SCALE: 1/8"=1'–0"

DB–A093
DB–A113X
DB–A124X
DB–A125X
DB–A144
DB–A145
DB–A203
DB–A303
DB–A314
DB–A403
DB–A414
DB–A415
DB–A423
DB–A424

KEY NOTES

- (14) SLPA – BFS SHTS AS44 & AS45
- (29) STRUCTURAL COLUMN
- (30) STRUCTURAL BEAM
- (31) STRUCTURAL MEMBER
- (45) GUARDRAIL ASSEMBLY – GLASS
- (47) HANDRAIL MOUNTED LED LIGHT FIXTURE TYPE B26, REFER TO LIGHTING DESIGN BASIS
- (48) HANDRAIL – METAL
- (57) ARCH PROFILE, REFER TO SHEET DB–A505
- (59) GLASS WALL SYSTEM TYPE 3
- (63) CATCH BASIN
- (74) EXPOSED METAL DECK
- (78) METAL ROOFING
- (79) SHORING WALL
- (84) MAT SLAB
- (85) RETAINING WALL
- (90) CMU WALL
- (91) TILE
- (98) TRENCH DRAIN
- (100) SMOKE DRAFT STOP
- (101) FIXED LADDER
- (114) METAL WALL PANEL WP–2, SEE DWG NO. DB–A701
- (116) ARCHITECTURAL METAL FASCIA
- (121) GLASS WALL SYSTEM TYPE 4
- (144) WIND FENCE
- (145) SMOKE CONTROL FAN
- (150) COLORED GLASS BLOCK, MIX OF 4 COLORS
- (155) CEMENT PLASTER FINISH
- (161) LOW WALL VENTS
- (163) SKYLIGHT SMOKE EVACUATION FAN
- (164) CONCRETE SLURRY SEE STRUCTURAL DRAWINGS

Santa Clara Valley Transportation Authority

____NO EXCEPTIONS TAKEN (NET)
____MAKE CORRECTIONS NOTED (MCN)
____AMEND AND RESUBMIT (A/R)

Any action shown above is subject to the terms of the contract and does not relieve the Contractor of any of its obligations under the contract, including design and detailing.

Contract No.: DB11002F

By: _____ **Date:** _____

Not for Construction

REV	DATE	BY	SUB	APP	DESCRIPTION
0	20130710				READINESS FOR CONSTRUCTION

DESIGNED BY S. DEBNATH
DRAWN BY R. COLLADO
CHECKED BY E. BALLADA
IN CHARGE R. BARLAAN
DATE 20130710

LICENSED ARCHITECT SOMESH DEBNATH No. C21523 STATE OF CALIFORNIA

Skanska Shimmick Herzog
1436 California Circle
Milpitas, California 95035
A Joint Venture

Anil Verma Associates, Inc.
1970 Broadway, Suite 525, Oakland, CA 94612
Phone: (510) 835-2537 Fax: (510) 835-2339

Lockwood, Andrews & Newnam, Inc. A LAN & RAIN COMPANY
T·Y·LIN INTERNATIONAL

SUBMITTED _____ APPROVED _____

VTA BART SILICON VALLEY
BART SILICON VALLEY BERRYESSA EXTENSION

LINE, TRACK, STATIONS AND SYSTEMS
DESIGN UNIT 023
MILPITAS STATION

TRANSVERSE SECTION
SHEET 5 OF 7

CADD FILENAME C700–S–DB–A215.dwg
SIZE D | SCALE 1/8"=1'–0" | CONTRACT NO. C700 | REV. 0
AREA CODE DB | SHEET NO. A215 | PAGE NO. 0382

Joseph G Jun 26, 2013 – 1:45pm G:\Current Projects\VTA–Berryessa Extension Project\Station – Milpitas\CAD\Drawings Out\13–0710 C700 Milpitas Station – RFC Submit\C700–S–DB–A215.dwg

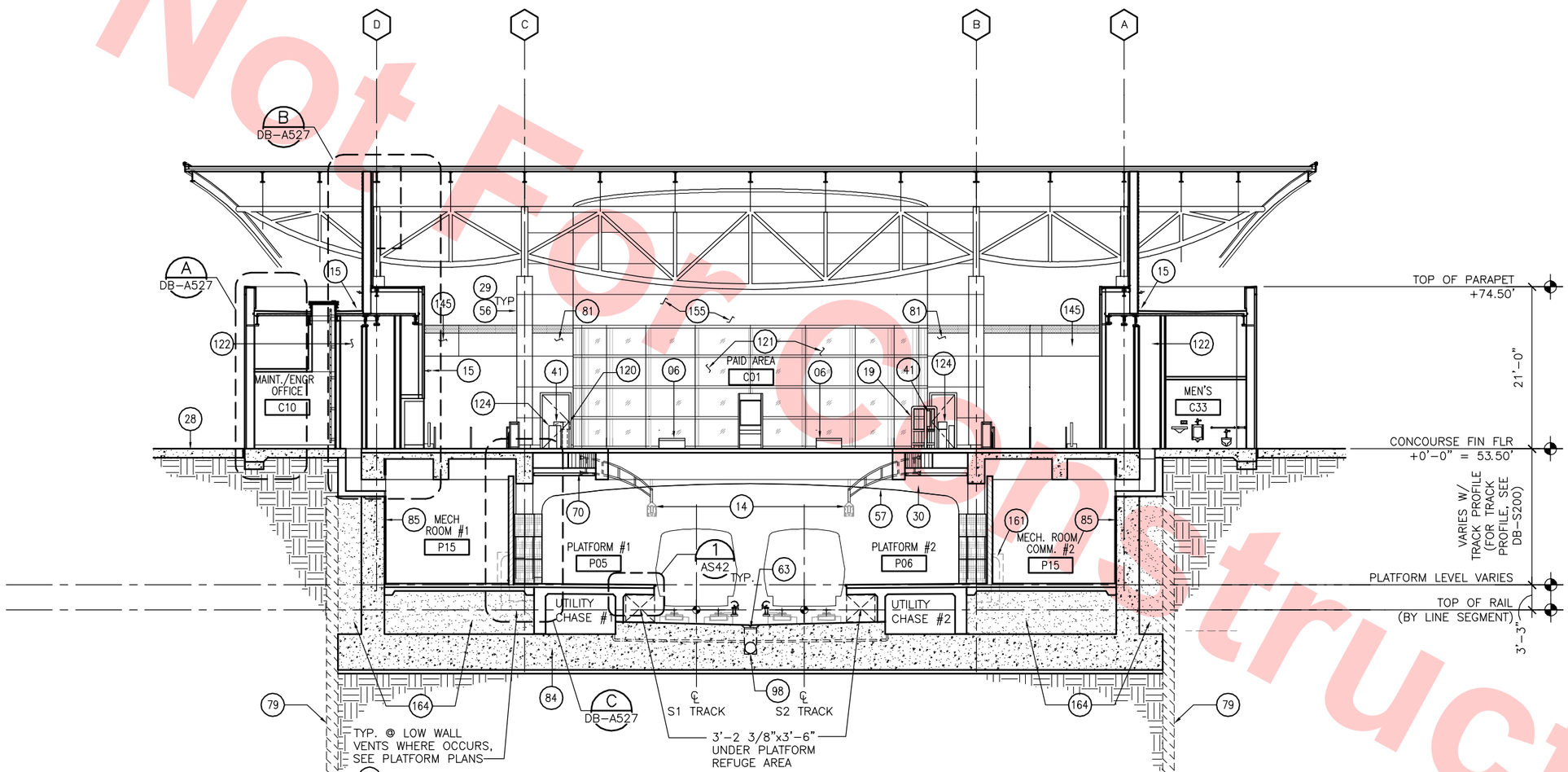

TRANSVERSE SECTION

SCALE: 1/8"=1'–0"

DB–A092
DB–A112X
DB–A122X
DB–A123X
DB–A131
DB–A132
DB–A142
DB–A143
DB–A202
DB–A302
DB–A315X
DB–A402
DB–A412
DB–A413

KEY NOTES

- 06 BENCH
- 14 SLPA – SEE BFS SHTS AS44, AS45 AND SEE ELEC/COMM/SECURITY DWGS.
- 15 LIGHT FIXTURE
- 19 PUBLIC PAY PHONE(S)
- 28 HARDSCAPE PAVING – SEE LANDSCAPE DRAWINGS
- 29 STRUCTURAL COLUMN
- 30 STRUCTURAL BEAM
- 41 BUS TRANSFER MACHINE, PER BFS
- 56 METAL COLUMN COVER TO MATCH COMPOSITE WALL PANEL WP–1
- 57 ARCH PROFILE, REFER TO SHEET DB–A505
- 63 CATCH BASIN
- 70 SUSPENDED LINEAR METAL CEILING
- 79 SHORING WALL
- 81 COMPOSITE WALL PANEL WP–1, SEE DWG NO. DB–A701
- 84 MAT SLAB
- 85 RETAINING WALL
- 98 TRENCH DRAIN
- 120 FUTURE BTM
- 121 GLASS WALL SYSTEM TYPE 4
- 122 SHAFT
- 124 BUS SCHEDULE RACK
- 145 SMOKE CONTROL FAN AND DUCT
- 155 CEMENT PLASTER FINISH
- 161 LOW WALL VENTS, SEE DWG. NO. DB–A524
- 164 CONCRETE SLURRY SEE STRUCTURAL DRAWINGS

Santa Clara Valley Transportation Authority

____NO EXCEPTIONS TAKEN (NET)
____MAKE CORRECTIONS NOTED (MCN)
____AMEND AND RESUBMIT (A/R)

Any action shown above is subject to the terms of the contract and does not relieve the Contractor of any of its obligations under the contract, including design and detailing.

Contract No.: DB11002F

By: _____ **Date:** _____

Not For Construction

REV	DATE	BY	SUB	APP	DESCRIPTION
0	20130710				READINESS FOR CONSTRUCTION

DESIGNED BY S. DEBNATH
DRAWN BY R. COLLADO
CHECKED BY E. BALLADA
IN CHARGE R. BARLAAN
DATE 20130710

LICENSED ARCHITECT SOMESH DEBNATH No. C21523 STATE OF CALIFORNIA

Skanska Shimmick Herzog
1436 California Circle
Milpitas, California 95035
A Joint Venture

Anil Verma Associates, Inc.
1970 Broadway, Suite 555, Oakland, CA 94612
Phone: (510) 835-2537 Fax: (510) 835-2339

Lockwood, Andrews & Newnam, Inc. A LEO A DALY COMPANY

T·Y·LIN INTERNATIONAL

SUBMITTED

APPROVED

VTA BART SILICON VALLEY

BART SILICON VALLEY BERRYESSA EXTENSION

LINE, TRACK, STATIONS AND SYSTEMS
DESIGN UNIT 023
MILPITAS STATION

TRANSVERSE SECTION
SHEET 6 OF 7

CADD FILENAME C700–S–DB–A216.dwg
SIZE D | SCALE 1/8"=1'–0"
CONTRACT NO. C700 | REV. 0
AREA CODE DB | SHEET NO. A216 | PAGE NO. 0383

JosephG Jun 26, 2013 – 1:45pm G:\Current Projects\VTA–Berryessa Extension Project\Station – Milpitas\CAD\Drawings Out\13–0710 C700 Milpitas Station – RFC Submit\C700–S–DB–A216.dwg

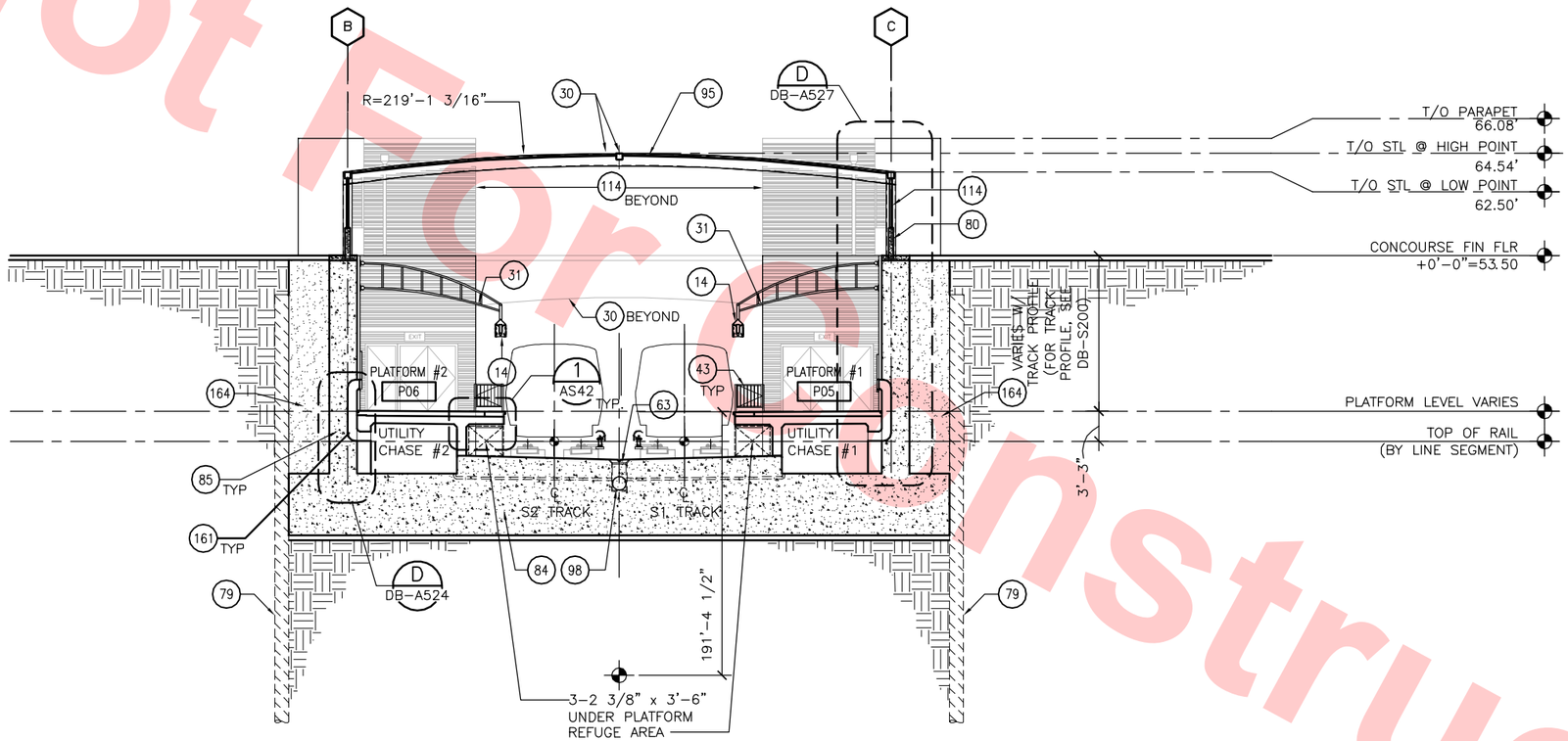

TRANSVERSE SECTION

SCALE: 1/8"=1'–0"

DB–A095
DB–A115X
DB–A127X
DB–A147
DB–A148
DB–A205
DB–A305
DB–A405
DB–A417

KEY NOTES

- (14) SLPA – BFS SHTS AS44 & AS45
- (30) STRUCTURAL BEAM
- (31) STRUCTURAL MEMBER. SEE DWG NO. DB–S306
- (43) END–OF–PLATFORM GATE WITH LATCHING POST, SEE BFS DET 1/AS70, SIM
- (63) CATCH BASIN
- (79) SHORING WALL
- (80) PRECAST ARCHITECTURAL CONCRETE WALL PANEL WP–3, SEE DWG NO. DB–A701
- (84) MAT SLAB
- (85) RETAINING WALL
- (95) BIRD/SAFETY NETTING
- (98) TRENCH DRAIN
- (114) METAL WALL PANEL WP–2, SEE DWG NO. DB–A701
- (161) LOW WALL VENTS
- (164) CONCRETE SLURRY SEE STRUCTURAL DRAWINGS

Santa Clara Valley Transportation Authority

____NO EXCEPTIONS TAKEN (NET)
____MAKE CORRECTIONS NOTED (MCN)
____AMEND AND RESUBMIT (A/R)

Any action shown above is subject to the terms of the contract and does not relieve the Contractor of any of its obligations under the contract, including design and detailing.

Contract No.: DB11002F

By: _____ Date: _____

Not For Construction

REV	DATE	BY	SUB	APP	DESCRIPTION
0	20130710				READINESS FOR CONSTRUCTION

DESIGNED BY S. DEBNATH
DRAWN BY R. COLLADO
CHECKED BY E. BALLADA
IN CHARGE R. BARLAAN
DATE 20130710

LICENSED ARCHITECT SOMESH DEBNATH No. C21523 STATE OF CALIFORNIA

Skanska Shimmick Herzog
1436 California Circle
Milpitas, California 95035
A Joint Venture

Anil Verma Associates, Inc.
1970 Broadway, Suite 525 Oakland, CA 94612
Phone: (510) 835-2537 Fax: (510) 835-2339
SUBMITTED

Lockwood, Andrews & Newnam, Inc. A LEO A DALY COMPANY
T·Y·LIN INTERNATIONAL
APPROVED

VTA BART SILICON VALLEY
BART SILICON VALLEY BERRYESSA EXTENSION

LINE, TRACK, STATIONS AND SYSTEMS
DESIGN UNIT 023
MILPITAS STATION

TRANSVERSE SECTION
SHEET 7 OF 7

CADD FILENAME C700–S–DB–A217.dwg
SIZE D | SCALE 1/8"=1'–0"
CONTRACT NO. C700 | REV. 0
AREA CODE DB | SHEET NO. A217 | PAGE NO. 0384

JosephG Jun 26, 2013 – 1:46pm G:\Current Projects\VTA–Berryessa Extension Project\Station – Milpitas\CAD\Drawings Out\13–0710 C700 Milpitas Station – RFC Submitt\C700–S–DB–A217.dwg

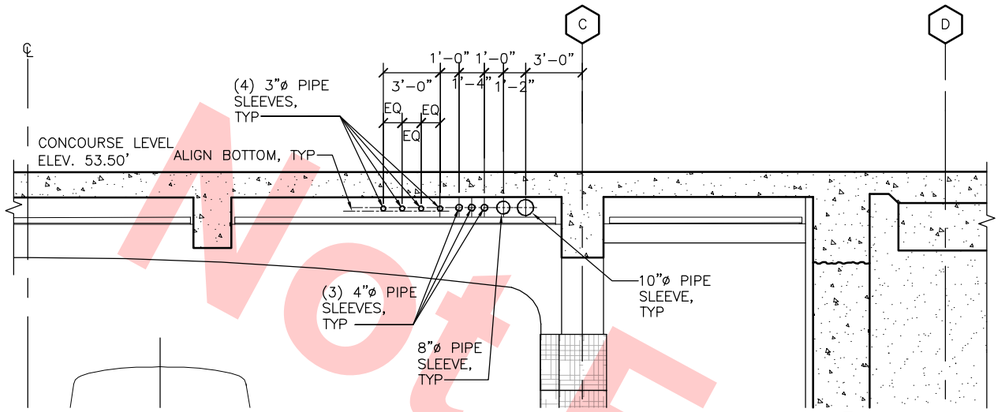

UTILITY PIPE SLEEVES LAYOUT ALONG GRID LINE C (1 / DB-A218)

@ GRID LINES 4 – 13 TYPICAL

SCALE: 1/4" = 1'-0"

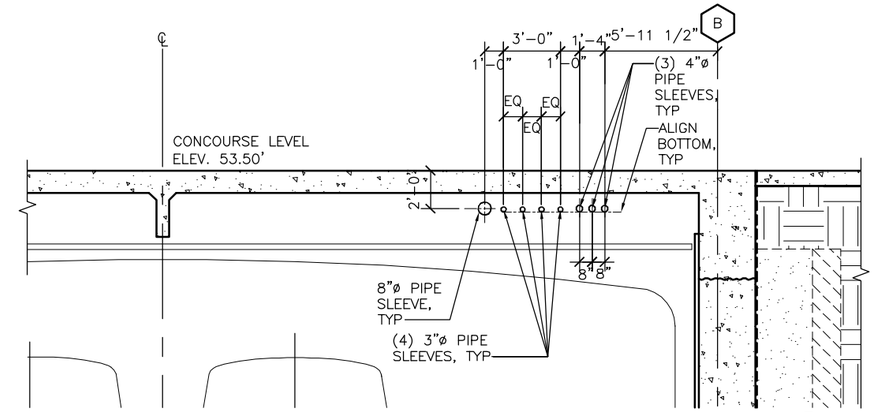

UTILITY PIPE SLEEVES LAYOUT ALONG GRID LINE B (2 / DB-A218)

@ GRID LINES 13 – 18 TYPICAL

SCALE: 1/4" = 1'-0"

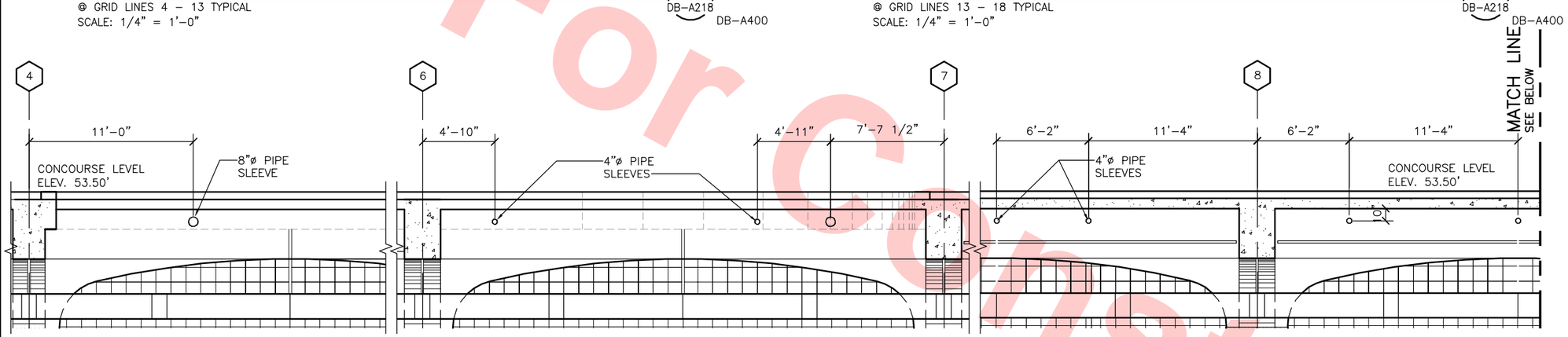

UTILITY PIPE SLEEVES LAYOUT (GRID LINE 4 – 8 TYP.) (3 / DB-A218)

SCALE: 1/4" = 1'-0"

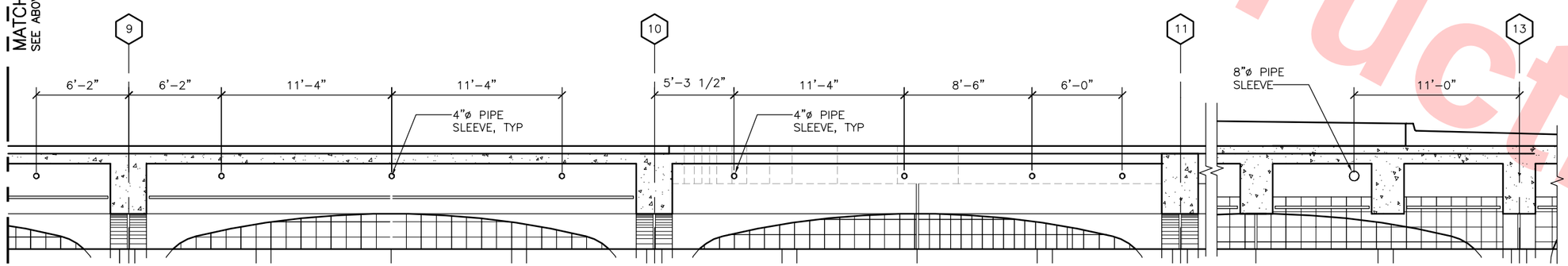

UTILITY PIPE SLEEVES LAYOUT (GRID LINE 8 – 13 TYP.) (4 / DB-A218)

SCALE: 1/4" = 1'-0"

Santa Clara Valley Transportation Authority

____NO EXCEPTIONS TAKEN (NET)
____MAKE CORRECTIONS NOTED (MCN)
____AMEND AND RESUBMIT (A/R)

Any action shown above is subject to the terms of the contract and does not relieve the Contractor of any of its obligations under the contract, including design and detailing.

Contract No.: DB11002F

By: _____ Date: _____

Not For Construction

REV	DATE	BY	SUB	APP	DESCRIPTION
0	20130710				READINESS FOR CONSTRUCTION

DESIGNED BY S. DEBNATH
DRAWN BY R. COLLADO
CHECKED BY E. BALLADA
IN CHARGE R. BARLAAN
DATE 20130710

LICENSED ARCHITECT SOMESH DEBNATH No. C21523 STATE OF CALIFORNIA

Skanska Shimmick Herzog
1436 California Circle
Milpitas, California 95035
A Joint Venture

Anil Verma Associates, Inc.
1970 Broadway, Suite 525, Oakland, CA 94612
Phone: (510) 835-2537 Fax: (510) 535-2339
SUBMITTED

Lockwood, Andrews & Newnam, Inc. A LEO A DALY COMPANY
T·Y·LIN INTERNATIONAL
APPROVED

VTA BART SILICON VALLEY
BART SILICON VALLEY BERRYESSA EXTENSION

LINE, TRACK, STATIONS AND SYSTEMS
DESIGN UNIT 023
MILPITAS STATION

UTILITY PIPE SLEEVES LAYOUT

CADD FILENAME C700-S-DB-A218.dwg
SIZE D | SCALE 1/8"=1'-0"
CONTRACT NO. C700 | REV. 0
AREA CODE DB | SHEET NO. A218 | PAGE NO. 0385

JosephG Jun 26, 2013 – 1:46pm G:\Current Projects\VTA-Berryessa Extension Project\Station – Milpitas\CAD\Drawings Out\13-0710 C700 Milpitas Station – RFC Submit\C700-S-DB-A218.dwg

Not For Construction

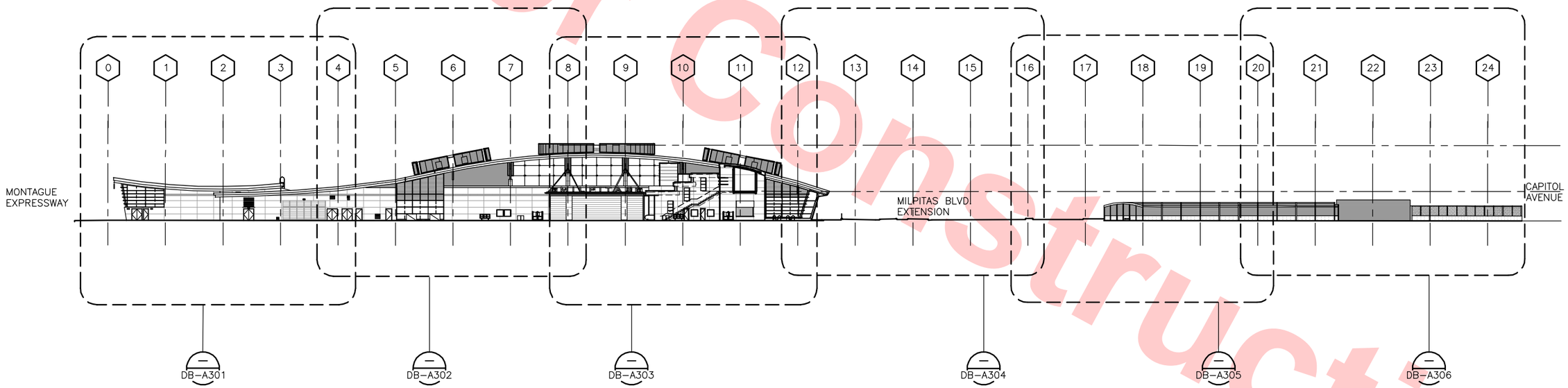

KEY EXTERIOR ELEVATION – WEST

SCALE: 1/32"=1'-0"

DB-A120X
DB-A130
DB-A140

Santa Clara Valley Transportation Authority

____NO EXCEPTIONS TAKEN (NET)
____MAKE CORRECTIONS NOTED (MCN)
____AMEND AND RESUBMIT (A/R)

Any action shown above is subject to the terms of the contract and does not relieve the Contractor of any of its obligations under the contract, including design and detailing.

Contract No.: DB11002F

By: _____ **Date:** _____

32' 0' 32' 64'
GRAPHIC SCALE

REV	DATE	BY	SUB	APP	DESCRIPTION
0	20130710				READINESS FOR CONSTRUCTION

DESIGNED BY S. DEBNATH
DRAWN BY R. COLLADO
CHECKED BY E. BALLADA
IN CHARGE R. BARLAAN
DATE 20130710

LICENSED ARCHITECT SANJEEV DEBNATH No. C21523 STATE OF CALIFORNIA

Skanska Shimmick Herzog
1436 California Circle
Milpitas, California 95035
A Joint Venture

Anil Verma Associates, Inc.
1970 Broadway, Suite 525 Oakland, CA 94612
Phone: (510) 835-2537 Fax: (510) 835-2339
SUBMITTED

Lockwood, Andrews & Newnam, Inc. A CH2M HILL COMPANY
T·Y·LIN INTERNATIONAL
APPROVED

VTA BART SILICON VALLEY
BART SILICON VALLEY BERRYESSA EXTENSION

LINE, TRACK, STATIONS AND SYSTEMS
DESIGN UNIT 023
MILPITAS STATION

KEY EXTERIOR ELEVATION
WEST ELEVATION

CADD FILENAME C700-S-DB-A300.dwg
SIZE D | SCALE 1/32"=1'-0"
CONTRACT NO. C700 | REV. 0
AREA CODE DB | SHEET NO. A300 | PAGE NO. 0386

JosephG Jun 26, 2013 – 1:47pm G:\Current Projects\VTA-Berryessa Extension Project\Station – Milpitas\CAD\Drawings Out\13-0710 C700 Milpitas Station – RFC Submit\C700-S-DB-A300.dwg

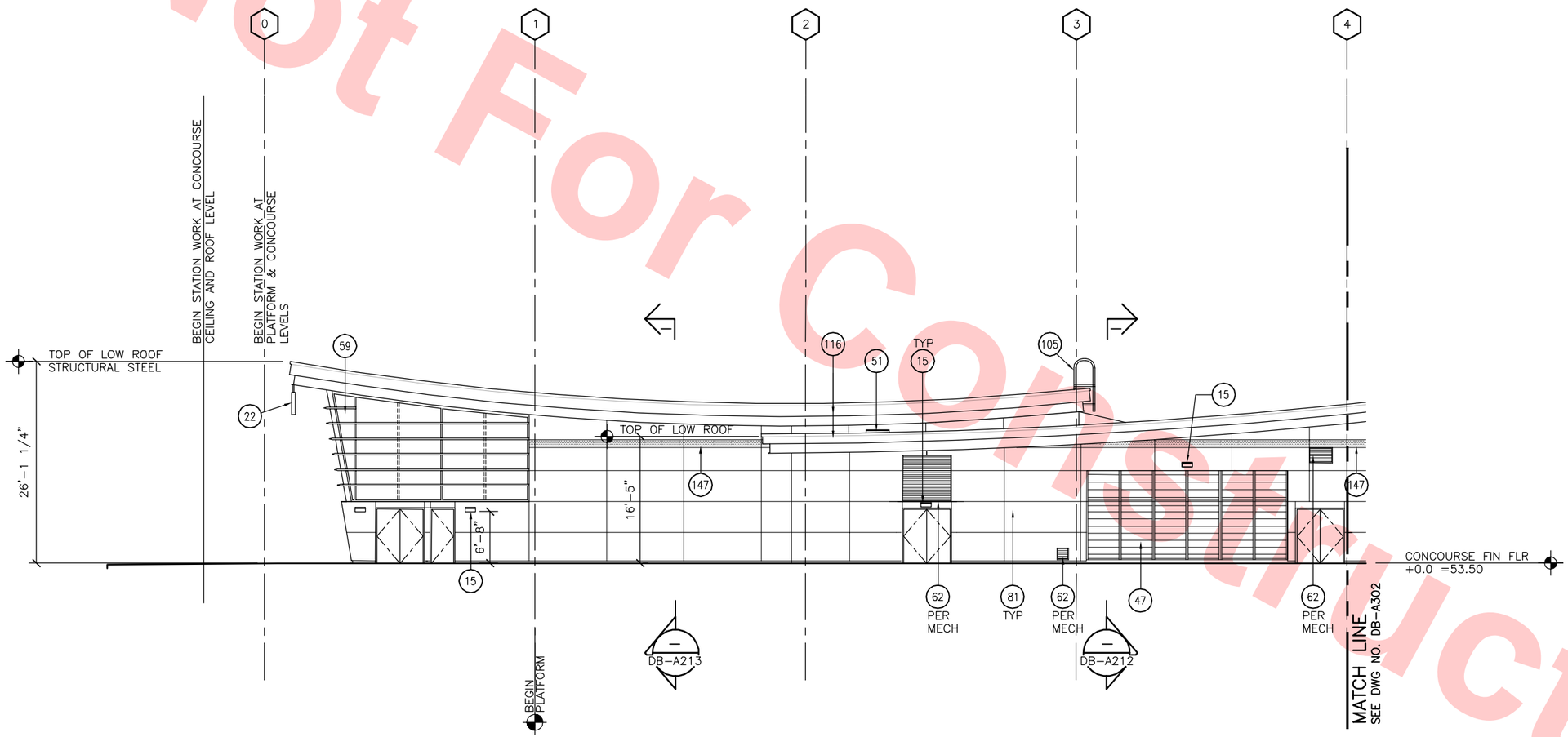

EXTERIOR ELEVATION—WEST

SCALE: 1/8"=1'-0"

DB-A121X
DB-A141
DB-A300

KEY NOTES

- (15) LIGHT FIXTURE
- (22) SIGN
- (47) ACOUSTICAL LOUVER
- (51) ACCESS HATCH
- (59) GLASS WALL SYSTEM – TYPE 3
- (62) LOUVER
- (81) COMPOSITE WALL PANEL WP–1, SEE DWG NO. DB–A701
- (105) FIXED LADDER
- (116) ARCHITECTURAL METAL FASCIA, RF–1, SEE DWG NO. DB–A701
- (147) METAL PANEL ACCENT BAND WP–1A, SEE DWG NO. DB–A701

Santa Clara Valley Transportation Authority

____NO EXCEPTIONS TAKEN (NET)
____MAKE CORRECTIONS NOTED (MCN)
____AMEND AND RESUBMIT (A/R)

Any action shown above is subject to the terms of the contract and does not relieve the Contractor of any of its obligations under the contract, including design and detailing.

Contract No.: DB11002F

By: _____ Date: _____

8' 0' 8' 16'

GRAPHIC SCALE

KEY ELEVATION

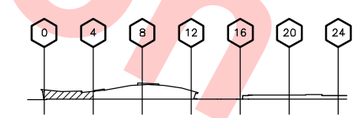

Not For Construction

REV	DATE	BY	SUB	APP	DESCRIPTION
0	20130710				READINESS FOR CONSTRUCTION

DESIGNED BY S. DEBNATH
DRAWN BY R. COLLADO
CHECKED BY E. BALLADA
IN CHARGE R. BARLAAN
DATE 20130710

LICENSED ARCHITECT SOMESH DEBNATH No. C21523 STATE OF CALIFORNIA

Skanska Shimmick Herzog
1436 California Circle
Milpitas, California 95035
A Joint Venture

SUBMITTED: Anil Verma Associates, Inc. 1970 Broadway, Suite 525 Oakland, CA 94612 Phone: (510) 835-2537 Fax: (510) 535-2339

APPROVED: Lockwood, Andrews & Newnam, Inc. A LAN & BALY COMPANY; T·Y·LIN INTERNATIONAL

VTA BART SILICON VALLEY
BART SILICON VALLEY BERRYESSA EXTENSION

LINE, TRACK, STATIONS AND SYSTEMS
DESIGN UNIT 023
MILPITAS STATION
EXTERIOR ELEVATION
WEST
SHEET 1 OF 6

CADD FILENAME C700-S-DB-A301.dwg
SIZE D | SCALE 1/8"=1'-0"
CONTRACT NO. C700 | REV. 0
AREA CODE DB | SHEET NO. A301 | PAGE NO. 0387

JosephG Jun 26, 2013 – 4:01pm G:\Current Projects\VTA-Berryessa Extension Project\Station – Milpitas\CAD\Drawings Out\13-0710 C700 Milpitas Station – RFC Submit\C700-S-DB-A301.dwg

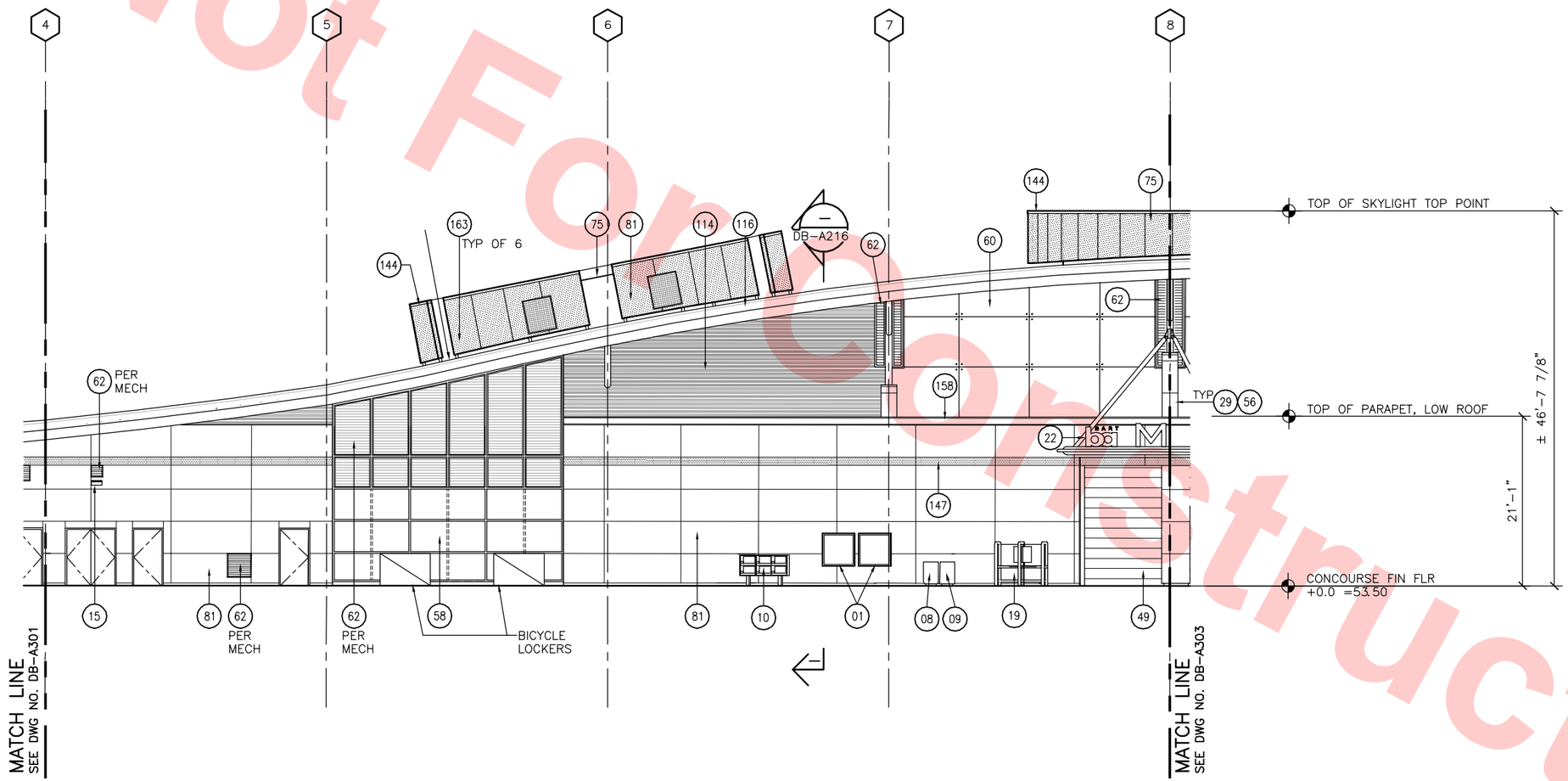

EXTERIOR ELEVATION—WEST

SCALE: 1/8"=1'-0"

DB-A123X
DB-A143
DB-A300

KEY NOTES

01	MAP CASE – WALL-MOUNTED BFS DET 4/AS83
08	TRASH RECEPTACLE
09	NEWSPAPER RECYCLING RECEPTACLE, NIC
10	NEWSPAPER RACK
15	LIGHT FIXTURE
19	PUBLIC PAY PHONE(S)
22	SIGN (REFER TO SIGNAGE DRAWINGS)
29	STRUCTURAL COLUMN
49	OVERHEAD COILING GRILLE
53	BICYCLE RACK(S)
56	METAL COLUMN COVER TO MATCH COMPOSITE WALL PANEL WP-1
58	GLASS WALL SYSTEM TYPE 2
60	FRAMELESS GLASS WALL SYSTEM TYPE 1
62	LOUVER
75	HORIZONTAL STRUCTURAL POINT SUPPORTED GLASS SKYLIGHT SYSTEM
81	COMPOSITE WALL PANEL WP-1, SEE DWG NO. DB-A701
114	METAL WALL PANEL WP-2, SEE DWG NO. DB-A701
116	ARCHITECTURAL METAL FASCIA, RF-1, SEE DWG NO. DB-A701
144	WIND FENCE
147	METAL PANEL ACCENT BAND WP-1A, SEE DWG NO. DB-A701
158	PARAPET ARCHITECTURAL METAL FASCIA, WP-1, SEE DWG NO. DB-A701
163	SKYLIGHT SMOKE EVACUATION FAN

Santa Clara Valley Transportation Authority

____NO EXCEPTIONS TAKEN (NET)
____MAKE CORRECTIONS NOTED (MCN)
____AMEND AND RESUBMIT (A/R)

Any action shown above is subject to the terms of the contract and does not relieve the Contractor of any of its obligations under the contract, including design and detailing.

Contract No.: DB11002F

By: _____ **Date:** _____

8' 0' 8' 16'

GRAPHIC SCALE

KEY ELEVATION

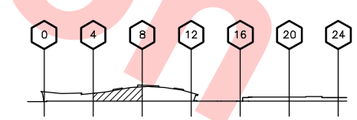

Not For Construction

REV	DATE	BY	SUB	APP	DESCRIPTION
0	20130710				READINESS FOR CONSTRUCTION

DESIGNED BY S. DEBNATH
DRAWN BY R. COLLADO
CHECKED BY E. BALLADA
IN CHARGE R. BARLAAN
DATE 20130710

LICENSED ARCHITECT SOMESH DEBNATH No. C21523 STATE OF CALIFORNIA

Skanska Shimmick Herzog
1436 California Circle
Milpitas, California 95035
A Joint Venture

Anil Verma Associates, Inc.
1970 Broadway, Suite 525, Oakland, CA 94612
Phone: (510) 835-2537 Fax: (510) 835-2339

Lockwood, Andrews & Newnam, Inc. A LEO A DALY COMPANY
T·Y·LIN INTERNATIONAL

SUBMITTED _____
APPROVED _____

VTA BART SILICON VALLEY
BART SILICON VALLEY BERRYESSA EXTENSION

LINE, TRACK, STATIONS AND SYSTEMS
DESIGN UNIT 023
MILPITAS STATION
EXTERIOR ELEVATION
WEST
SHEET 2 OF 6

CADD FILENAME C700-S-DB-A302.dwg
SIZE D | SCALE 1/8"=1'-0"
CONTRACT NO. C700 | REV. 0
AREA CODE DB | SHEET NO. A302 | PAGE NO. 0388

Joseph G Jun 26, 2013 – 1:49pm G:\Current Projects\VTA-Berryessa Extension Project\Station – Milpitas\CAD\Drawings Out\13-0710 C700 Milpitas Station – RFC Submittal\C700-S-DB-A302.dwg

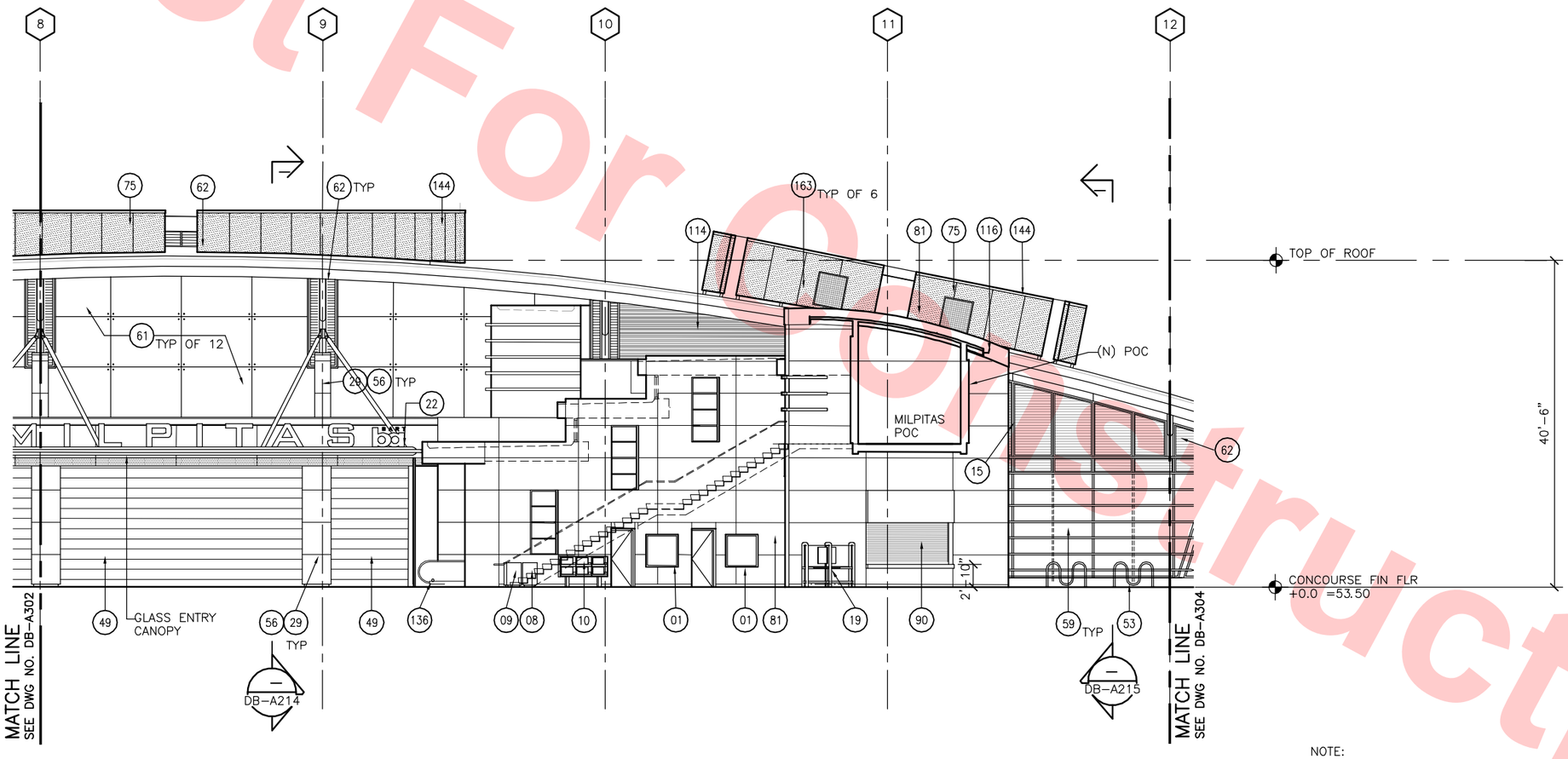

NOTE:

FOR MILPITAS POC REFER MONTAGUE LRT MILPITAS POC DRAWINGS

EXTERIOR ELEVATION–WEST

SCALE: 1/8"=1'-0"

DB–A125X
DB–A145
DB–A300

KEY NOTES

- 01 MAP CASE – WALL–MOUNTED, BFS DET 1/AS83
- 03 INFO KIOSK – THREE–SIDED, BFS DET 1/AS85
- 08 TRASH RECEPTACLE
- 09 NEWSPAPER RECYCLING RECEPTACLE, NIC
- 10 NEWSPAPER RACK
- 15 LIGHT FIXTURE
- 19 PUBLIC PAY PHONE(S)
- 22 SIGN (REFER TO SIGNAGE DRAWINGS)
- 29 STRUCTURAL COLUMN
- 49 OVERHEAD COILING GRILLE
- 53 BICYCLE RACK(S)
- 56 METAL COLUMN COVER TO MATCH COMPOSITE WALL PANEL WP–1
- 59 GLASS WALL SYSTEM TYPE 3
- 61 ART GLASS PANE
- 62 LOUVER
- 75 HORIZONTAL STRUCTURAL POINT SUPPORTED GLASS SKYLIGHT SYSTEM
- 81 COMPOSITE WALL PANEL WP–1, SEE DWG NO. DB–A701
- 90 INSULATED ROLL–UP COUNTER
- 114 METAL WALL PANEL WP–2, SEE DWG NO. DB–A701
- 116 ARCHITECTURAL METAL FASCIA, RF–1, SEE DWG NO. DB–A701
- 136 DOWNSPOUT NOZZLE – SEE PLUMBING DRAWINGS
- 144 WIND FENCE
- 163 SKYLIGHT SMOKE EVACUATION FAN

Santa Clara Valley Transportation Authority

____NO EXCEPTIONS TAKEN (NET)
____MAKE CORRECTIONS NOTED (MCN)
____AMEND AND RESUBMIT (A/R)

Any action shown above is subject to the terms of the contract and does not relieve the Contractor of any of its obligations under the contract, including design and detailing.

Contract No.: DB11002F

By: _____ **Date:** _____

8' 0' 8' 16'

GRAPHIC SCALE

KEY ELEVATION

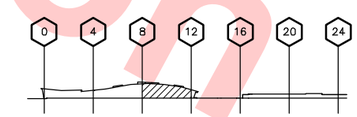

Not For Construction

REV	DATE	BY	SUB	APP	DESCRIPTION
0	20130710				READINESS FOR CONSTRUCTION

DESIGNED BY S. DEBNATH
DRAWN BY R. COLLADO
CHECKED BY E. BALLADA
IN CHARGE R. BARLAAN
DATE 20130710

LICENSED ARCHITECT SAMESH DEBNATH No. C21523 STATE OF CALIFORNIA

Skanska Shimmick Herzog
1436 California Circle
Milpitas, California 95035
A Joint Venture

Anil Verma Associates, Inc.
1970 Broadway, Suite 535 Oakland, CA 94612
Phone: (510) 835-2537 Fax: (510) 535-2339

Lockwood, Andrews & Newnam, Inc. A LAN & BALY COMPANY
T·Y·LIN INTERNATIONAL

SUBMITTED _____
APPROVED _____

VTA BART SILICON VALLEY
BART SILICON VALLEY BERRYESSA EXTENSION

LINE, TRACK, STATIONS AND SYSTEMS
DESIGN UNIT 023
MILPITAS STATION
EXTERIOR ELEVATION
WEST
SHEET 3 OF 6

CADD FILENAME C700–S–DB–A303.dwg
SIZE D | SCALE 1/8"=1'-0"
CONTRACT NO. C700 | REV. 0
AREA CODE DB | SHEET NO. A303 | PAGE NO. 0389

JosephG Jun 26, 2013 – 1:50pm G:\Current Projects\VTA-Berryessa Extension Project\Station – Milpitas\CAD\Drawings Out\13-0710 C700 Milpitas Station – RFC Submit\C700-S-DB-A303.dwg

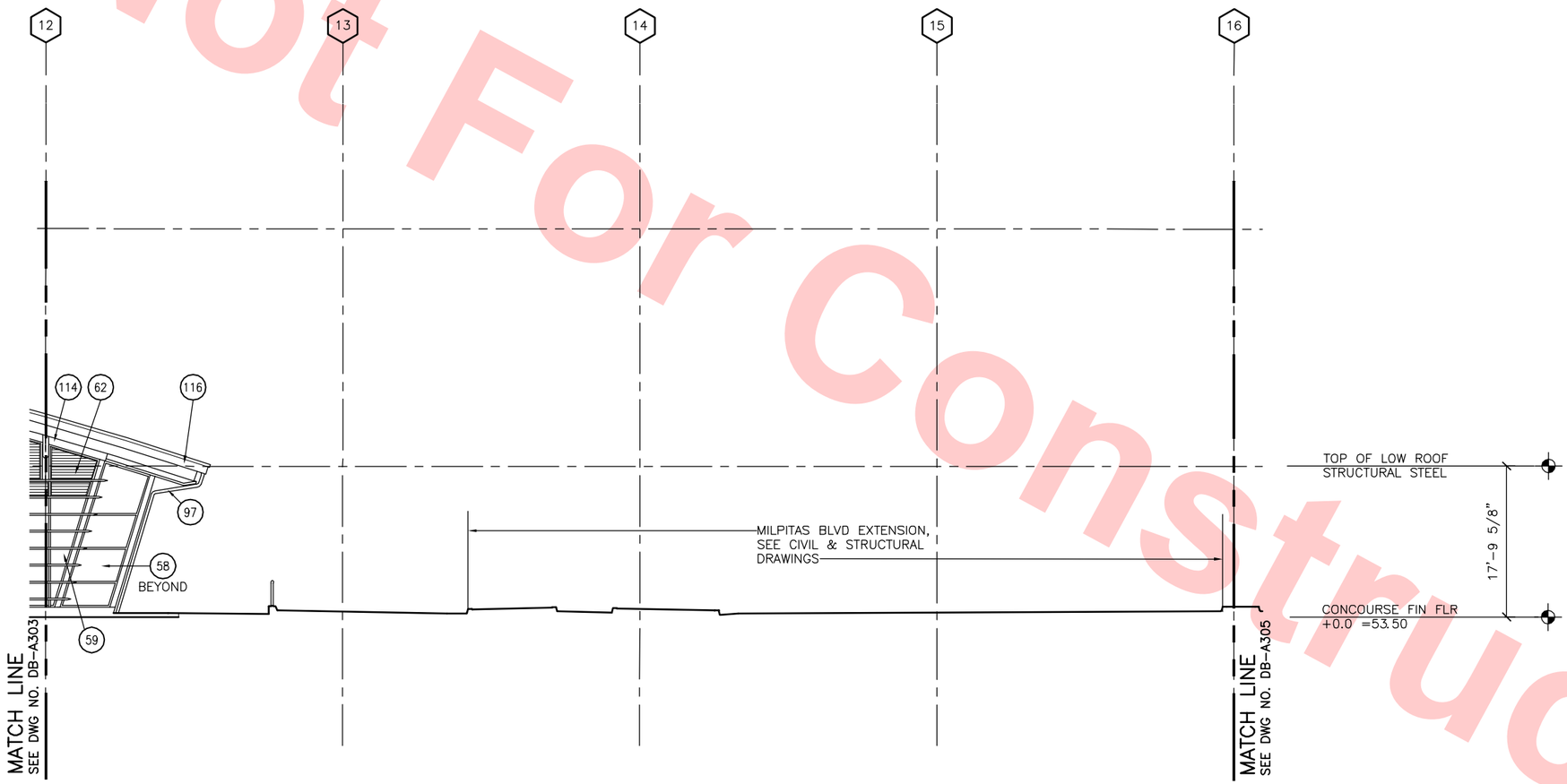

EXTERIOR ELEVATION—WEST

SCALE: 1/8"=1'-0"

DB-A126X
DB-A146
DB-A300

KEY NOTES

58 GLASS WALL SYSTEM TYPE 2
59 GLASS WALL SYSTEM TYPE 3
62 LOUVER
97 DOWNSPOUT/RAINWATER LEADER
114 METAL WALL PANEL WP-2, SEE DWG NO. DB-A701
116 ARCHITECTURAL METAL FASCIA, RF-1, SEE DWG. NO. DB-A701

Santa Clara Valley Transportation Authority

____NO EXCEPTIONS TAKEN (NET)
____MAKE CORRECTIONS NOTED (MCN)
____AMEND AND RESUBMIT (A/R)

Any action shown above is subject to the terms of the contract and does not relieve the Contractor of any of its obligations under the contract, including design and detailing.

Contract No.: DB11002F

By: _____ **Date:** _____

8' 0' 8' 16'
GRAPHIC SCALE

KEY ELEVATION

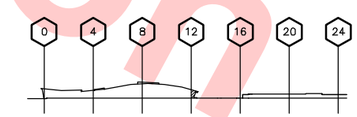

Not For Construction

REV	DATE	BY	SUB	APP	DESCRIPTION
0	20130710				READINESS FOR CONSTRUCTION

DESIGNED BY S. DEBNATH
DRAWN BY R. COLLADO
CHECKED BY E. BALLADA
IN CHARGE R. BARLAAN
DATE 20130710

LICENSED ARCHITECT SOMESH DEBNATH No. C21523 STATE OF CALIFORNIA

Skanska Shimmick Herzog
1436 California Circle
Milpitas, California 95035
A Joint Venture

Anil Verma Associates, Inc.
1970 Broadway, Suite 525, Oakland, CA 94612
Phone: (510) 835-2537 Fax: (510) 835-2339

Lockwood, Andrews & Newnam, Inc. A LAN & BAYH COMPANY
T·Y·LIN INTERNATIONAL

SUBMITTED _____
APPROVED _____

VTA BART SILICON VALLEY
BART SILICON VALLEY BERRYESSA EXTENSION

LINE, TRACK, STATIONS AND SYSTEMS
DESIGN UNIT 023
MILPITAS STATION
EXTERIOR ELEVATION
WEST
SHEET 4 OF 6

CADD FILENAME C700-S-DB-A304.dwg
SIZE D | SCALE 1/8"=1'-0"
CONTRACT NO. C700 | REV. 0
AREA CODE DB | SHEET NO. A304 | PAGE NO. 0390

Joseph G Jun 26, 2013 - 1:50pm G:\Current Projects\VTA-Berryessa Extension Project\Station - Milpitas\CAD\Drawings Out\13-0710 C700 Milpitas Station - RFC Submitt C700-S-DB-A304.dwg

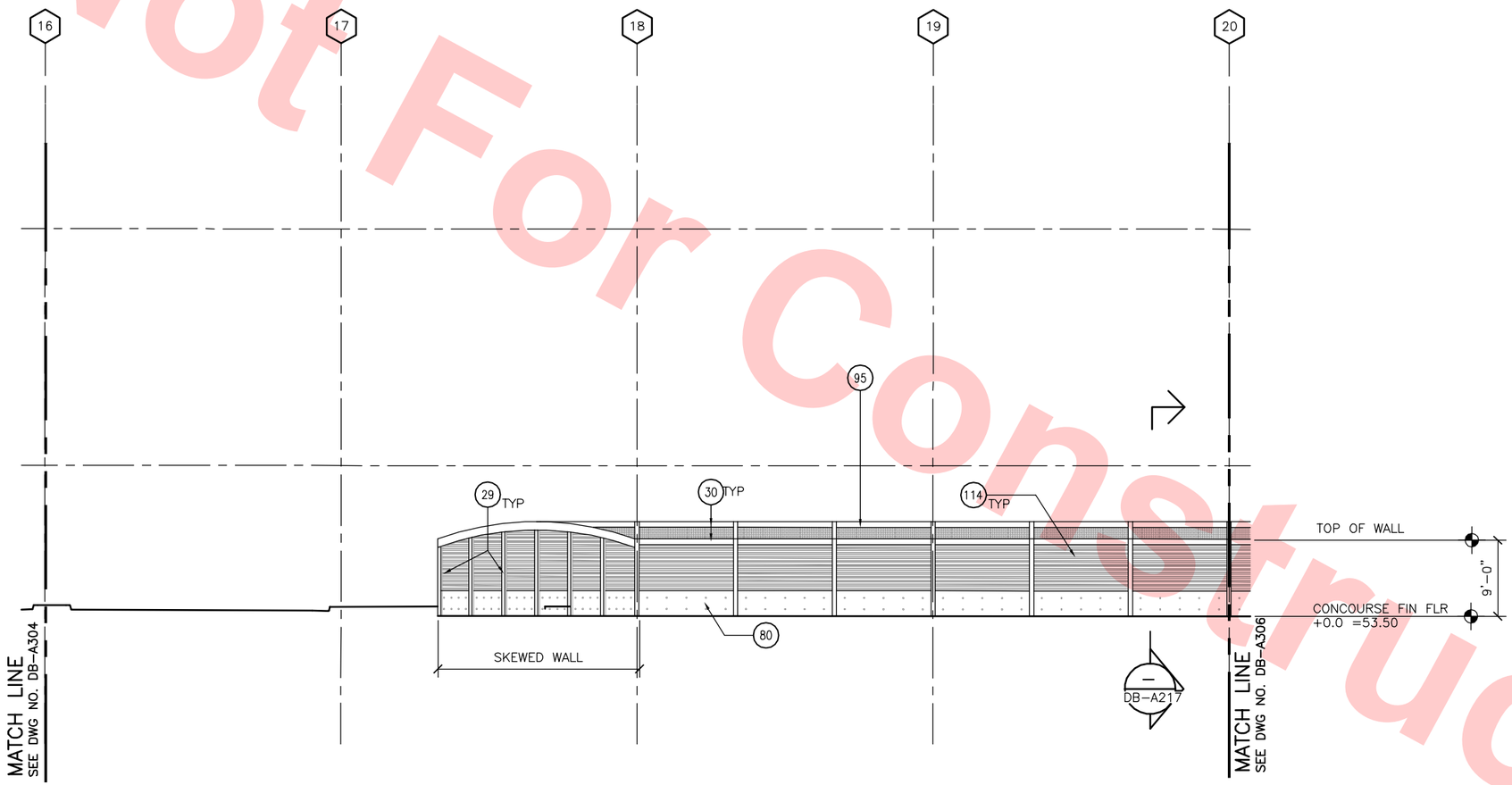

EXTERIOR ELEVATION—WEST

SCALE: 1/8"=1'-0"

DB-A127X
DB-A147
DB-A300

KEY NOTES

29 STRUCTURAL COLUMN
30 STRUCTURAL BEAM
95 BIRD/SAFETY NETTING
80 PRECAST ARCHITECTURAL CONCRETE WALL PANEL WP-3, SEE DWG NO. DB-A701
114 METAL WALL PANEL WP-2, SEE DWG NO. DB-A701

Santa Clara Valley Transportation Authority

____NO EXCEPTIONS TAKEN (NET)
____MAKE CORRECTIONS NOTED (MCN)
____AMEND AND RESUBMIT (A/R)

Any action shown above is subject to the terms of the contract and does not relieve the Contractor of any of its obligations under the contract, including design and detailing.

Contract No.: DB11002F

By: _____ **Date:** _____

8' 0' 8' 16'

GRAPHIC SCALE

KEY ELEVATION

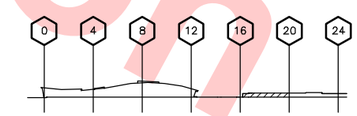

Not For Construction

REV	DATE	BY	SUB	APP	DESCRIPTION
0	20130710				READINESS FOR CONSTRUCTION

DESIGNED BY S. DEBNATH
DRAWN BY R. COLLADO
CHECKED BY E. BALLADA
IN CHARGE R. BARLAAN
DATE 20130710

LICENSED ARCHITECT SUMESH DEBNATH No. C21523 STATE OF CALIFORNIA

Skanska Shimmick Herzog
1436 California Circle
Milpitas, California 95035
A Joint Venture

Anil Verma Associates, Inc.
1970 Broadway, Suite 525, Oakland, CA 94612
Phone: (510) 835-2537 Fax: (510) 835-2339
SUBMITTED

Lockwood, Andrews & Newnam, Inc. A LEO A DALY COMPANY
T·Y·LIN INTERNATIONAL
APPROVED

VTA BART SILICON VALLEY
BART SILICON VALLEY BERRYESSA EXTENSION

LINE, TRACK, STATIONS AND SYSTEMS
DESIGN UNIT 023
MILPITAS STATION
EXTERIOR ELEVATION
WEST
SHEET 5 OF 6

CADD FILENAME C700-S-DB-A305.dwg
SIZE D | SCALE 1/8"=1'-0"
CONTRACT NO. C700 | REV. 0
AREA CODE DB | SHEET NO. A305 | PAGE NO. 0391

JosephG Jun 26, 2013 – 1:51pm G:\Current Projects\VTA-Berryessa Extension Project\Station – Milpitas\CAD\Drawings Out\13-0710 C700 Milpitas Station – RFC Submit\C700-S-DB-A305.dwg

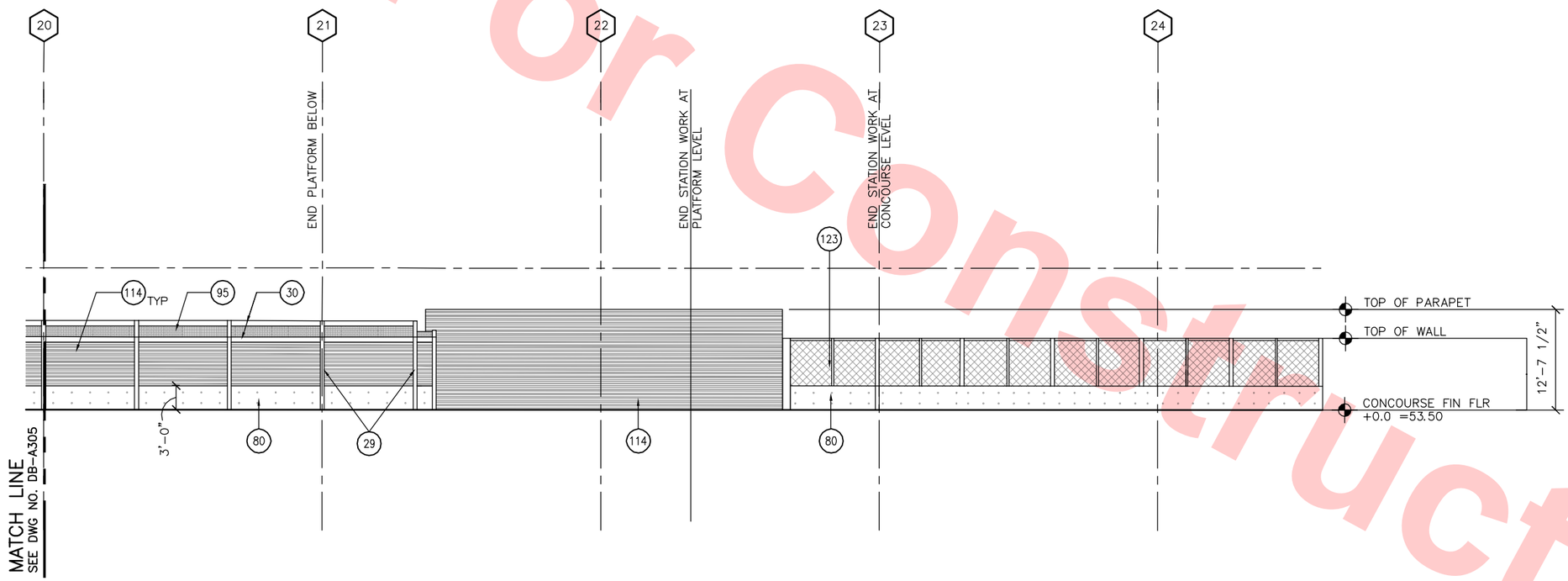

EXTERIOR ELEVATION—WEST

SCALE: 1/8"=1'-0"

DB-A128X
DB-A148
DB-A300

KEY NOTES

29 STRUCTURAL COLUMN
30 STRUCTURAL BEAM
80 PRECAST ARCHITECTURAL CONCRETE WALL PANEL WP-3, SEE DWG NO. DB-A701
95 BIRD/SAFETY NETTING
114 METAL WALL PANEL WP-2, SEE DWG NO. DB-A701
123 WIRE FENCE

Santa Clara Valley Transportation Authority

____NO EXCEPTIONS TAKEN (NET)
____MAKE CORRECTIONS NOTED (MCN)
____AMEND AND RESUBMIT (A/R)

Any action shown above is subject to the terms of the contract and does not relieve the Contractor of any of its obligations under the contract, including design and detailing.

Contract No.: DB11002F

By: _____ Date: _____

8' 0' 8' 16'

GRAPHIC SCALE

KEY ELEVATION

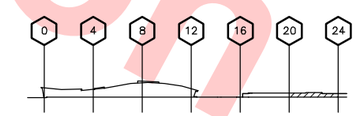

Not For Construction

REV	DATE	BY	SUB	APP	DESCRIPTION
0	20130710				READINESS FOR CONSTRUCTION

DESIGNED BY S. DEBNATH
DRAWN BY R. COLLADO
CHECKED BY E. BALLADA
IN CHARGE R. BARLAAN
DATE 20130710

LICENSED ARCHITECT SOMESH DEBNATH No. C21523 STATE OF CALIFORNIA

Skanska Shimmick Herzog
1436 California Circle
Milpitas, California 95035
A Joint Venture

Anil Verma Associates, Inc.
1970 Broadway, Suite 525, Oakland, CA 94612
Phone: (510) 835-2537 Fax: (510) 835-2339

Lockwood, Andrews & Newnam, Inc. A LEO A DALY COMPANY

T·Y·LIN INTERNATIONAL

SUBMITTED _____ APPROVED _____

VTA BART SILICON VALLEY

BART SILICON VALLEY BERRYESSA EXTENSION

LINE, TRACK, STATIONS AND SYSTEMS
DESIGN UNIT 023
MILPITAS STATION
EXTERIOR ELEVATION
WEST
SHEET 6 OF 6

CADD FILENAME C700-S-DB-A306.dwg
SIZE D | SCALE 1/8"=1'-0"
CONTRACT NO. C700 | REV. 0
AREA CODE DB | SHEET NO. A306 | PAGE NO. 0392

JosephG Jun 26, 2013 – 1:51pm G:\Current Projects\VTA-Berryessa Extension Project\Station – Milpitas\CAD\Drawings Out\13-0710 C700 Milpitas Station – RFC Submittal\C700-S-DB-A306.dwg

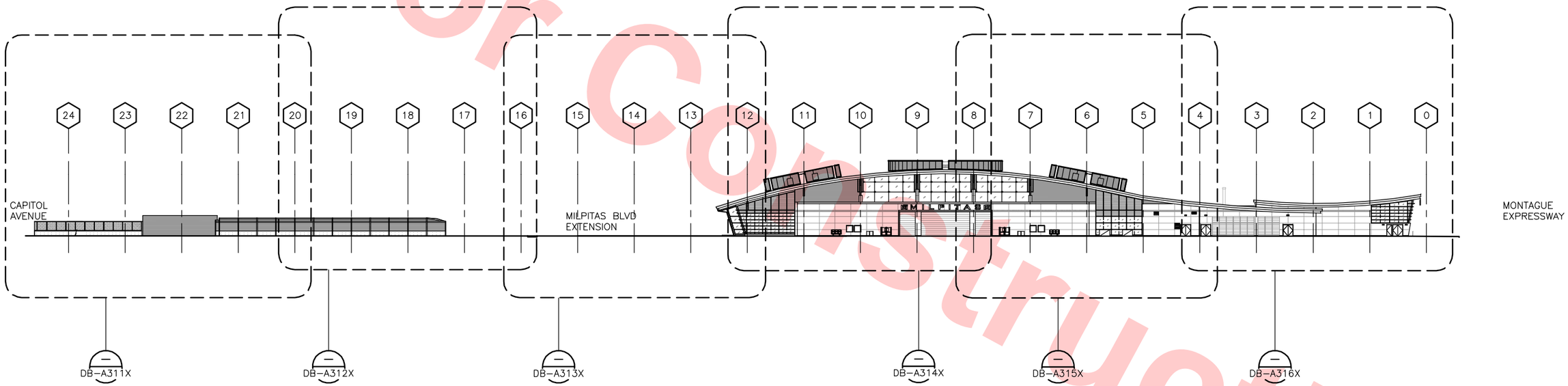

KEY EXTERIOR ELEVATION–EAST

SCALE: 1/32"=1'–0"

DB–A120X
DB–A130
DB–A140

Santa Clara Valley Transportation Authority

____NO EXCEPTIONS TAKEN (NET)
____MAKE CORRECTIONS NOTED (MCN)
____AMEND AND RESUBMIT (A/R)

Any action shown above is subject to the terms of the contract and does not relieve the Contractor of any of its obligations under the contract, including design and detailing.

Contract No.: DB11002F

By: _____ Date: _____

32' 0' 32' 64'
GRAPHIC SCALE

Not For Construction

REV	DATE	BY	SUB	APP	DESCRIPTION
0	20130710				READINESS FOR CONSTRUCTION
					REPLACES C–700–S–DB–A307, REV. P

DESIGNED BY S. DEBNATH
DRAWN BY R. COLLADO
CHECKED BY E. BALLADA
IN CHARGE R. BARLAAN
DATE 20130710

LICENSED ARCHITECT SOMESH DEBNATH No. C21523 STATE OF CALIFORNIA

Skanska Shimmick Herzog
1436 California Circle
Milpitas, California 95035
A Joint Venture

Anil Verma Associates, Inc.
1970 Broadway, Suite 525 Oakland, CA 94612
Phone: (510) 835-2637 Fax: (510) 535-2339

Lockwood, Andrews & Newnam, Inc. A LAN & BALL COMPANY
T·Y·LIN INTERNATIONAL

SUBMITTED _____
APPROVED _____

VTA BART SILICON VALLEY
BART SILICON VALLEY BERRYESSA EXTENSION

LINE, TRACK, STATIONS AND SYSTEMS
DESIGN UNIT 023
MILPITAS STATION

KEY EXTERIOR ELEVATION
EAST ELEVATION

CADD FILENAME C700–S–DB–A310X.dwg
SIZE D | SCALE 1/32"=1'–0"
CONTRACT NO. C700 | REV. 0
AREA CODE DB | SHEET NO. A310X | PAGE NO. 0393

JoseinG Jun 26, 2013 – 1:51pm G:\Current Projects\VTA–Berryessa Extension Project\Station – Milpitas\CAD\Drawings Out\13–0710 C700 Milpitas Station – RFC Submit\C700–S–DB–A310X.dwg

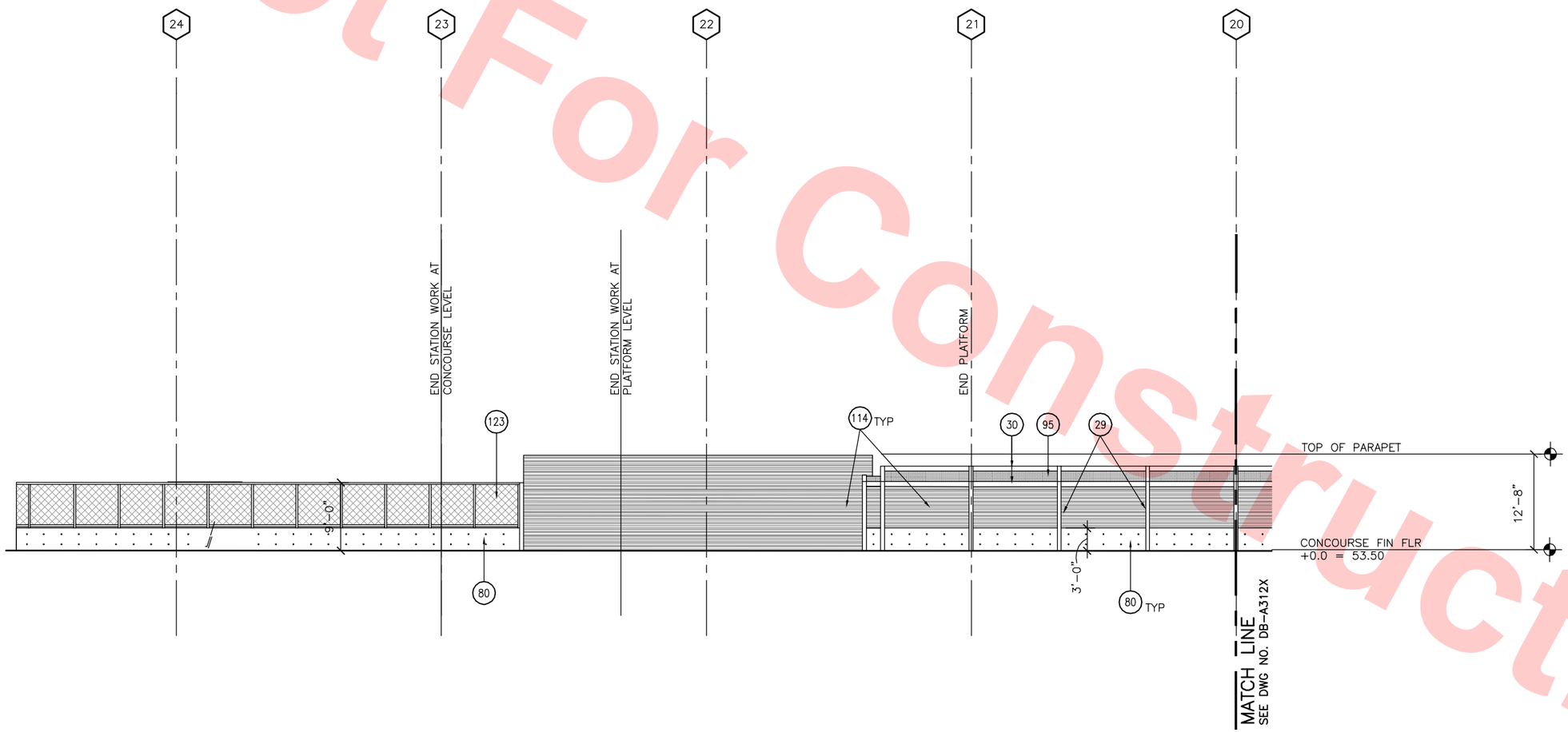

EXTERIOR ELEVATION—EAST

SCALE: 1/8"=1'-0"

DB-A128X
DB-A148
DB-A310X

KEY NOTES

29 STRUCTURAL COLUMN
30 STRUCTURAL BEAM
80 PRECAST ARCHITECTURAL CONCRETE WALL PANEL WP-3, SEE DWG NO. DB-A701
95 BIRD/SAFETY NETTING
114 METAL WALL PANEL WP-2, SEE DWG NO. DB-A701
123 WIRE FENCE

Santa Clara Valley Transportation Authority

____NO EXCEPTIONS TAKEN (NET)
____MAKE CORRECTIONS NOTED (MCN)
____AMEND AND RESUBMIT (A/R)

Any action shown above is subject to the terms of the contract and does not relieve the Contractor of any of its obligations under the contract, including design and detailing.

Contract No.: DB11002F

By: _____ **Date:** _____

8' 0' 8' 16'

GRAPHIC SCALE

KEY ELEVATION

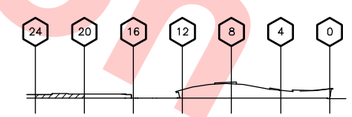

Not For Construction

REV	DATE	BY	SUB	APP	DESCRIPTION
0	20130710				READINESS FOR CONSTRUCTION
					REPLACES C-700-S-DB-A308, REV. P

DESIGNED BY S. DEBNATH
DRAWN BY R. COLLADO
CHECKED BY E. BALLADA
IN CHARGE R. BARLAAN
DATE 20130710

LICENSED ARCHITECT SOMESH DEBNATH No. C21523 STATE OF CALIFORNIA

Skanska Shimmick Herzog
1436 California Circle
Milpitas, California 95035
A Joint Venture

Anil Verma Associates, Inc.
1970 Broadway, Suite 525 Oakland, CA 94612
Phone: (510) 835-2537 Fax: (510) 835-2339

Lockwood, Andrews & Newnam, Inc. A LEO A DALY COMPANY

T·Y·LIN INTERNATIONAL

SUBMITTED _____ APPROVED _____

VTA BART SILICON VALLEY

BART SILICON VALLEY BERRYESSA EXTENSION

LINE, TRACK, STATIONS AND SYSTEMS
DESIGN UNIT 023
MILPITAS STATION
EXTERIOR ELEVATION
EAST
SHEET 1 OF 6

CADD FILENAME C700-S-DB-A311X.dwg
SIZE D | SCALE 1/8"=1'-0"
CONTRACT NO. C700 | REV. 0
AREA CODE DB | SHEET NO. A311X | PAGE NO. 0394

JosephG Jun 26, 2013 – 1:52pm G:\Current Projects\VTA-Berryessa Extension Project\Station – Milpitas\CAD\Drawings Out\13-0710 C700 Milpitas Station – RFC Submit\C700-S-DB-A311X.dwg

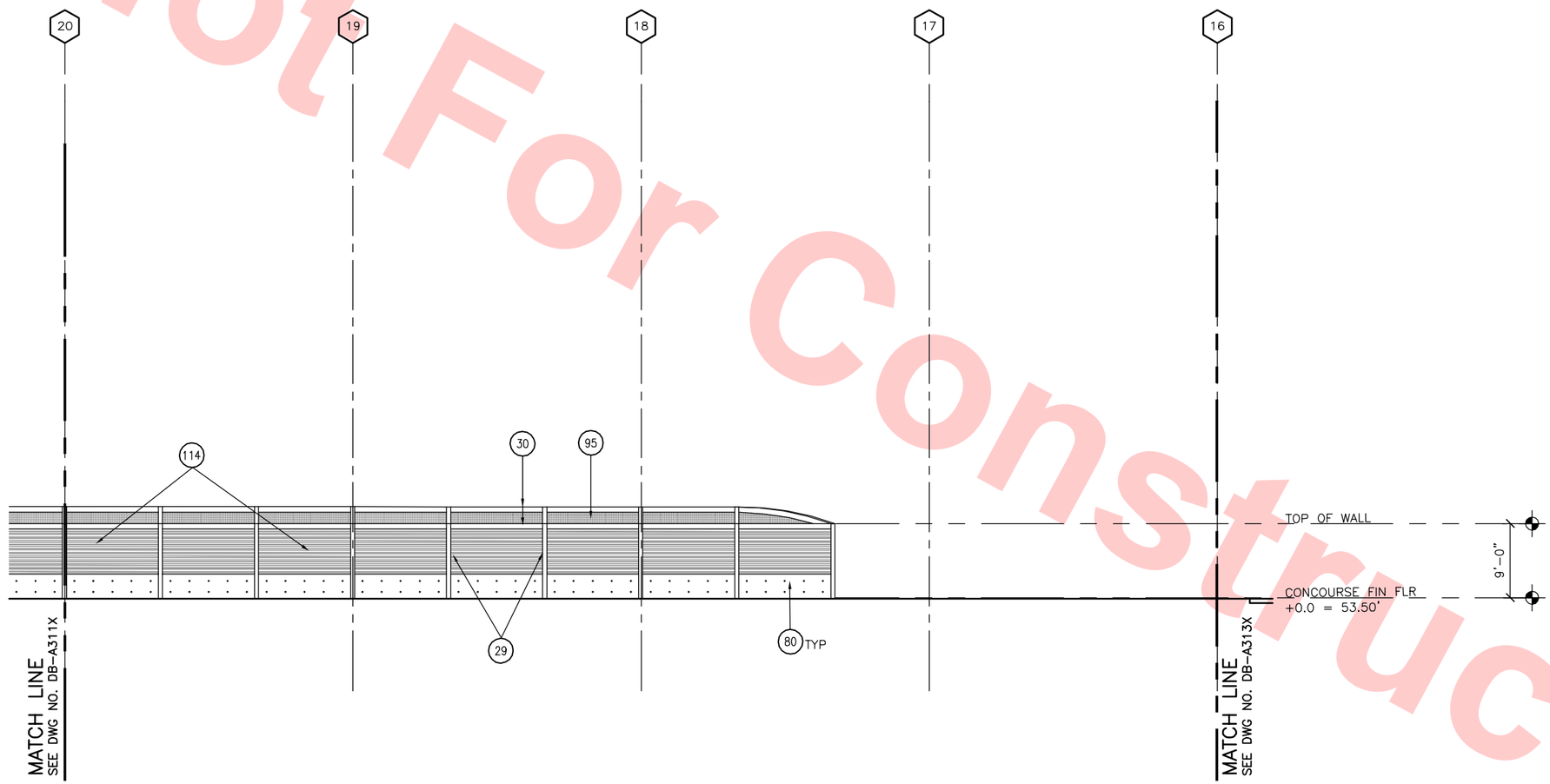

EXTERIOR ELEVATION—EAST

SCALE: 1/8"=1'-0"

DB-A127X
DB-A147
DB-A310X

KEY NOTES

29 STRUCTURAL COLUMN

30 STRUCTURAL BEAM

80 PRECAST ARCHITECTURAL CONCRETE WALL PANEL WP-3, SEE DWG NO. DB-A701

95 BIRD/SAFETY NETTING

114 METAL WALL PANEL WP-2, SEE DWG NO. DB-A701

Santa Clara Valley Transportation Authority

____NO EXCEPTIONS TAKEN (NET)
____MAKE CORRECTIONS NOTED (MCN)
____AMEND AND RESUBMIT (A/R)

Any action shown above is subject to the terms of the contract and does not relieve the Contractor of any of its obligations under the contract, including design and detailing.

Contract No.: DB11002F

By: _____ Date: _____

8' 0' 8' 16'

GRAPHIC SCALE

KEY ELEVATION

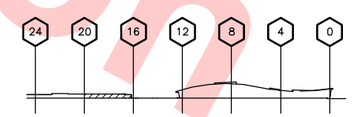

Not For Construction

REV	DATE	BY	SUB	APP	DESCRIPTION
0	20130710				READINESS FOR CONSTRUCTION
					REPLACES C-700-S-DB-A309, REV. P

DESIGNED BY S. DEBNATH
DRAWN BY R. COLLADO
CHECKED BY E. BALLADA
IN CHARGE R. BARLAAN
DATE 20130710

LICENSED ARCHITECT SAMESH DEBNATH No. C21523 STATE OF CALIFORNIA

Skanska Shimmick Herzog
1436 California Circle
Milpitas, California 95035
A Joint Venture

Anil Verma Associates, Inc.
1970 Broadway, Suite 525, Oakland, CA 94612
Phone: (510) 835-2537 Fax: (510) 835-2339

SUBMITTED

Lockwood, Andrews & Newnam, Inc. A LAN & RAIN COMPANY
T·Y·LIN INTERNATIONAL

APPROVED

VTA BART SILICON VALLEY

BART SILICON VALLEY BERRYESSA EXTENSION

LINE, TRACK, STATIONS AND SYSTEMS
DESIGN UNIT 023
MILPITAS STATION
EXTERIOR ELEVATION
EAST
SHEET 2 OF 6

CADD FILENAME C700-S-DB-A312X.dwg
SIZE D | SCALE 1/8"=1'-0"
CONTRACT NO. C700 | REV. 0
AREA CODE DB | SHEET NO. A312X | PAGE NO. 0395

JosephG Jun 26, 2013 - 1:52pm G:\Current Projects\VTA-Berryessa Extension Project\Station - Milpitas\CAD\Drawings Out\13-0710 C700 Milpitas Station - RFC Submitt\C700-S-DB-A312X.dwg

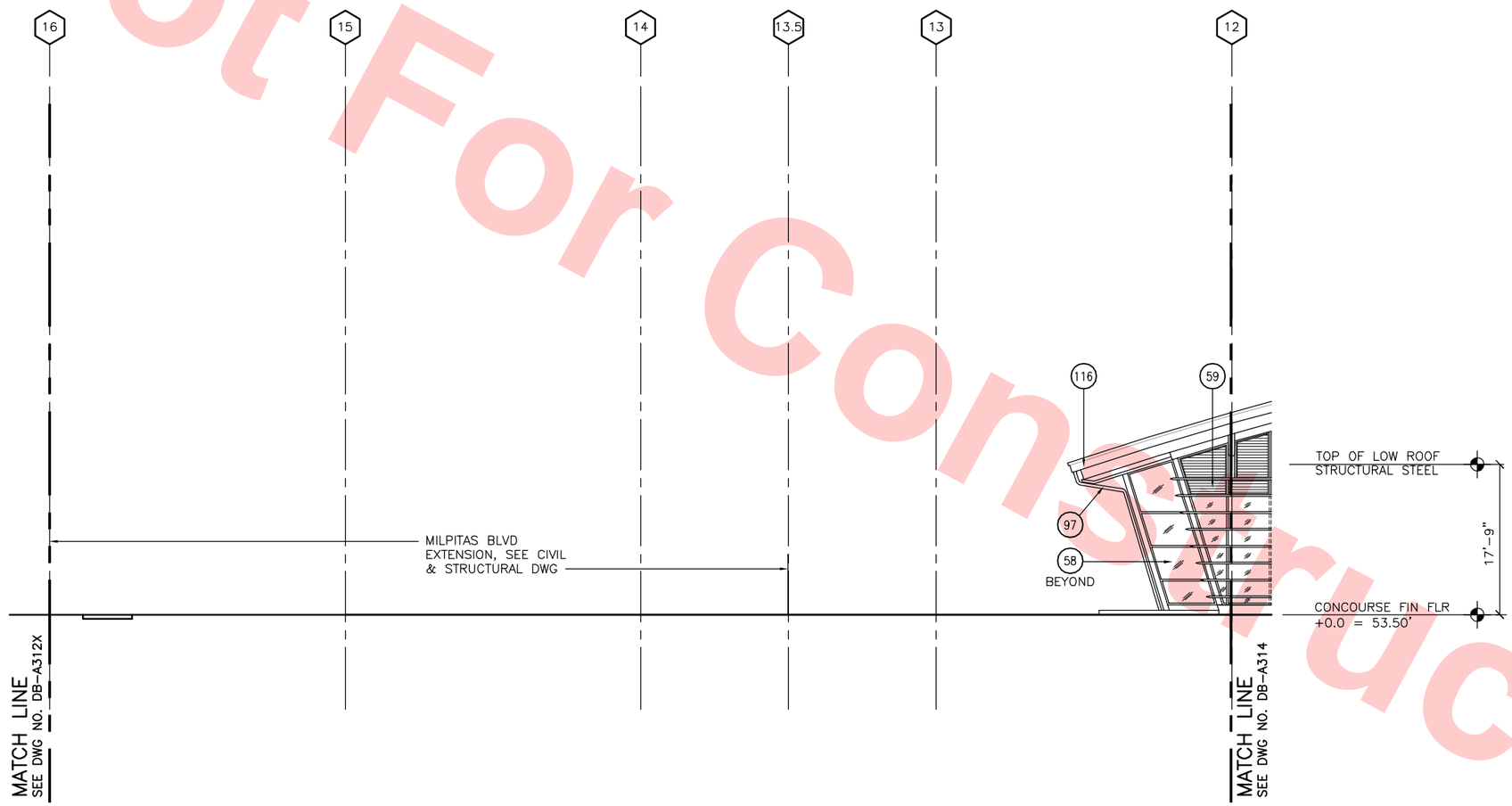

EXTERIOR ELEVATION—EAST

SCALE: 1/8"=1'-0"

DB-A126X
DB-A310X

KEY NOTES

58 GLASS WALL SYSTEM TYPE 2

59 GLASS WALL SYSTEM TYPE 3

97 DOWNSPOUT/RAINWATER LEADER

116 ARCHITECTURAL METAL FASCIA, RF-1, SEE DWG NO. DB-A701

Santa Clara Valley Transportation Authority

____NO EXCEPTIONS TAKEN (NET)
____MAKE CORRECTIONS NOTED (MCN)
____AMEND AND RESUBMIT (A/R)

Any action shown above is subject to the terms of the contract and does not relieve the Contractor of any of its obligations under the contract, including design and detailing.

Contract No.: DB11002F

By: _____ **Date:** _____

8' 0' 8' 16'

GRAPHIC SCALE

KEY ELEVATION

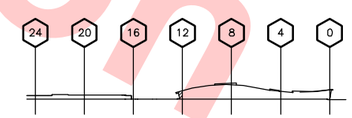

Not For Construction

REV	DATE	BY	SUB	APP	DESCRIPTION
0	20130710				READINESS FOR CONSTRUCTION
					REPLACES C-700-S-DB-A310, REV. P

DESIGNED BY S. DEBNATH
DRAWN BY R. COLLADO
CHECKED BY E. BALLADA
IN CHARGE R. BARLAAN
DATE 20130710

LICENSED ARCHITECT — DINESH DEBNATH — No. C21523 — STATE OF CALIFORNIA

Skanska Shimmick Herzog
1436 California Circle
Milpitas, California 95035
A Joint Venture

Anil Verma Associates, Inc.
1970 Broadway, Suite 525, Oakland, CA 94612
Phone: (510) 835-2537 Fax: (510) 835-2339

Lockwood, Andrews & Newnam, Inc. — A LAN & BALV COMPANY

T·Y·LIN INTERNATIONAL

SUBMITTED _____ APPROVED _____

VTA BART SILICON VALLEY

BART SILICON VALLEY BERRYESSA EXTENSION

LINE, TRACK, STATIONS AND SYSTEMS
DESIGN UNIT 023
MILPITAS STATION
EXTERIOR ELEVATION
EAST
SHEET 3 OF 6

CADD FILENAME C700-S-DB-A313X.dwg
SIZE D | SCALE 1/8"=1'-0"
CONTRACT NO. C700 | REV. 0
AREA CODE DB | SHEET NO. A313X | PAGE NO. 0396

JosephG Jun 26, 2013 - 1:53pm G:\Current Projects\VTA-Berryessa Extension Project\Station - Milpitas\CAD\Drawings Out\13-0710 C700 Milpitas Station - RFC Submit\C700-S-DB-A313X.dwg

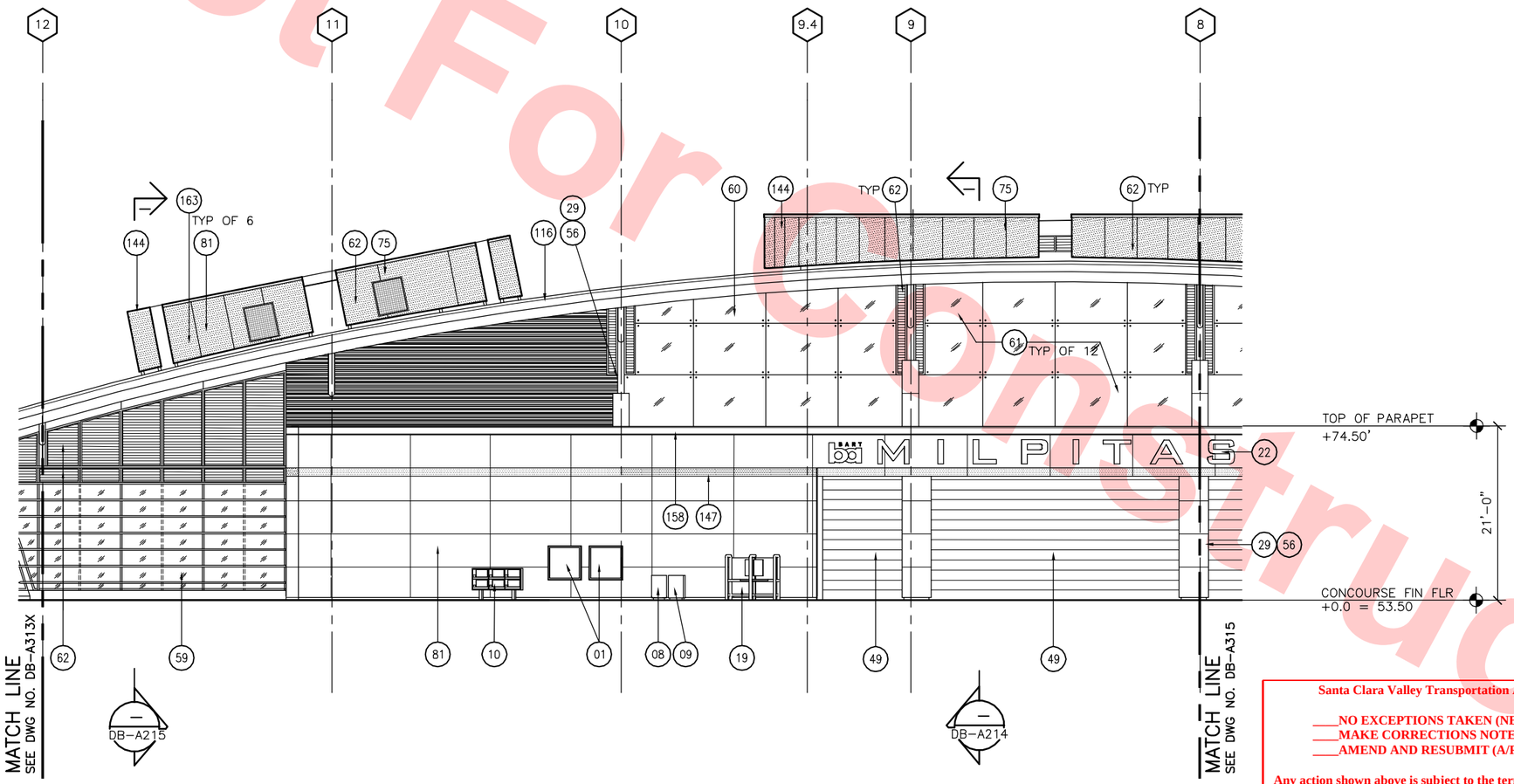

EXTERIOR ELEVATION—EAST

SCALE: 1/8"=1'-0"

DB-A124X
DB-A144
DB-A310X

Santa Clara Valley Transportation Authority

____NO EXCEPTIONS TAKEN (NET)
____MAKE CORRECTIONS NOTED (MCN)
____AMEND AND RESUBMIT (A/R)

Any action shown above is subject to the terms of the contract and does not relieve the Contractor of any of its obligations under the contract, including design and detailing.

Contract No.: DB11002F

By: _____ Date: _____

KEY NOTES

- 01 MAP CASE – WALL–MOUNTED, BFS DET 4/AS83
- 03 INFO KIOSK – THREE–SIDED, BFS DET 1/AS85
- 08 TRASH RECEPTACLE
- 09 NEWSPAPER RECYCLING RECEPTACLE, NIC
- 10 NEWSPAPER RACK
- 15 LIGHT FIXTURE
- 19 PUBLIC PAY PHONE(S)
- 22 SIGN (REFER TO SIGNAGE DRAWINGS)
- 29 STRUCTURAL COLUMN
- 49 OVERHEAD COILING GRILLE
- 53 BICYCLE RACK(S)
- 56 METAL COLUMN COVER TO MATCH COMPOSITE WALL PANEL WP–1
- 59 GLASS WALL SYSTEM TYPE 3
- 60 GLASS WALL SYSTEM TYPE 1
- 61 ART GLASS PANE (OWNER PROVIDED CONTRACTOR INSTALLED)
- 62 LOUVER
- 75 HORIZONTAL STRUCTURAL POINT SUPPORTED GLASS SKYLIGHT SYSTEM
- 81 COMPOSITE WALL PANEL WP–1, SEE DWG NO. DB–A701
- 114 METAL WALL PANEL WP–2, SEE DWG NO. DB–A701
- 116 ARCHITECTURAL METAL FASCIA, RF–1, SEE DWG NO. DB–A701
- 144 WIND FENCE
- 147 METAL PANEL ACCENT BAND WP–1A, SEE DWG NO. DB–A701
- 158 PARAPET ARCHITECTURAL METAL FASCIA, WP–1, SEE DWG NO. DB–A701
- 163 SKYLIGHT SMOKE EVACUATION FAN

NOTE

FOR DIMENSIONS OF ROOF GEOMETRY, SEE DWG NO. DB–A303, SIM

8' 0' 8' 16'

GRAPHIC SCALE

KEY ELEVATION

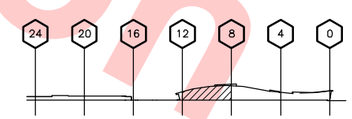

Not For Construction

REV	DATE	BY	SUB	APP	DESCRIPTION
0	20130710				READINESS FOR CONSTRUCTION
					REPLACES C–700–S–DB–A311 REV. Q

DESIGNED BY S. DEBNATH
DRAWN BY R. COLLADO
CHECKED BY E. BALLADA
IN CHARGE R. BARLAAN
DATE 20130710

LICENSED ARCHITECT SOMESH DEBNATH No. C21523 STATE OF CALIFORNIA

Skanska Shimmick Herzog
1436 California Circle
Milpitas, California 95035
A Joint Venture

Anil Verma Associates, Inc.
1970 Broadway, Suite 525, Oakland, CA 94612
Phone: (510) 835-2537 Fax: (510) 835-2339

Lockwood, Andrews & Newnam, Inc. A LEO A DALY COMPANY

T·Y·LIN INTERNATIONAL

SUBMITTED

APPROVED

VTA BART SILICON VALLEY

BART SILICON VALLEY BERRYESSA EXTENSION

LINE, TRACK, STATIONS AND SYSTEMS
DESIGN UNIT 023
MILPITAS STATION
EXTERIOR ELEVATION
EAST
SHEET 4 OF 6

CADD FILENAME C700–S–DB–A314X.dwg
SIZE D | SCALE 1/8"=1'-0"
CONTRACT NO. C700 | REV. 0
AREA CODE DB | SHEET NO. A314X | PAGE NO. 0397

JosephG Jun 26, 2013 – 5:17pm G:\Current Projects\VTA–Berryessa Extension Project\Station – Milpitas\CAD\Drawings Out\13–0710 C700 Milpitas Station – RFC Submit\C700–S–DB–A314X.dwg

Not For Construction

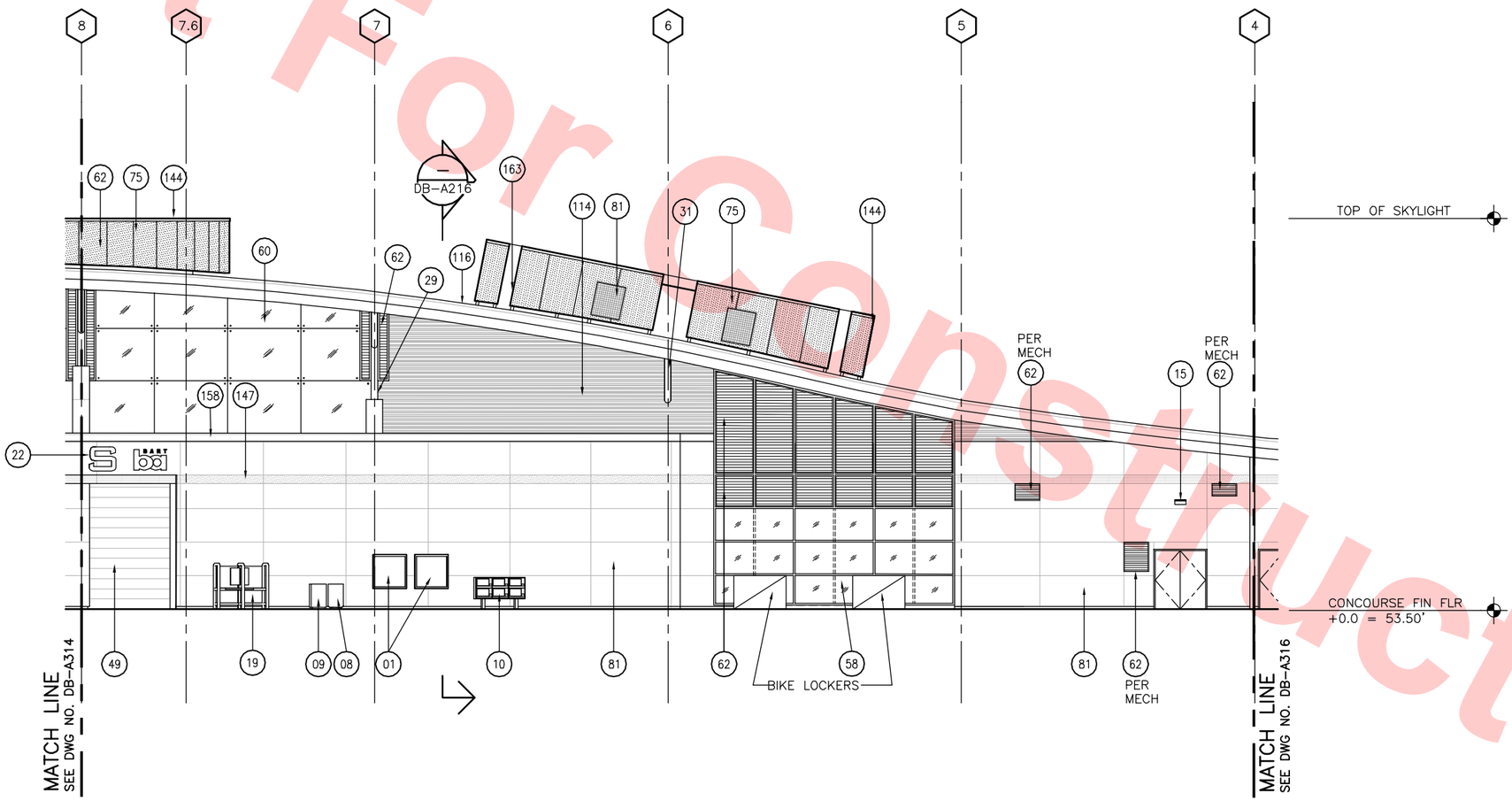

EXTERIOR ELEVATION – EAST

SCALE: 1/8"=1'-0"

DB-A122X
DB-A142
DB-A310X

KEY NOTES

- 01 MAP CASE – WALL-MOUNTED, BFS DET 4/AS83
- 08 TRASH RECEPTACLE
- 09 NEWSPAPER RECYCLING RECEPTACLE, NIC
- 10 NEWSPAPER RACK
- 15 LIGHT FIXTURE
- 19 PUBLIC PAY PHONE(S)
- 22 SIGN, (REFER TO SIGNAGE DRAWINGS)
- 29 STRUCTURAL COLUMN
- 31 STRUCTURAL MEMBER
- 49 OVERHEAD COILING GRILLE
- 53 BICYCLE RACK(S)
- 58 GLASS WALL SYSTEM TYPE 2
- 60 GLASS WALL SYSTEM TYPE 1
- 62 LOUVER
- 75 HORIZONTAL STRUCTURAL POINT SUPPORTED GLASS SKYLIGHT SYSTEM
- 81 COMPOSITE WALL PANEL WP-1, SEE DWG NO. DB-A701
- 114 METAL WALL PANEL WP-2, SEE DWG NO. DB-A701
- 116 ARCHITECTURAL METAL FASCIA, RF-1, SEE DWG NO. DB-A701
- 144 WIND FENCE
- 147 METAL PANEL ACCENT BAND WP-1A, SEE DWG NO. DB-A701
- 158 PARAPET ARCHITECTURAL METAL FASCIA, WP-1, SEE DWG NO. DB-A701
- 163 SKYLIGHT SMOKE EVACUATION FAN

NOTE

FOR DIMENSIONS OF ROOF GEOMETRY, SEE DWG NO. DB-A302, SIM

Santa Clara Valley Transportation Authority

____NO EXCEPTIONS TAKEN (NET)
____MAKE CORRECTIONS NOTED (MCN)
____AMEND AND RESUBMIT (A/R)

Any action shown above is subject to the terms of the contract and does not relieve the Contractor of any of its obligations under the contract, including design and detailing.

Contract No.: DB11002F

By: _____ Date: _____

8' 0' 8' 16'

GRAPHIC SCALE

KEY ELEVATION

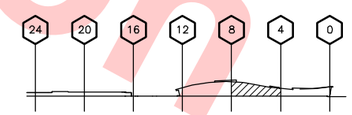

REV	DATE	BY	SUB	APP	DESCRIPTION
0	20130710				READINESS FOR CONSTRUCTION
					REPLACES C-700-S-DB-A312, REV. Q

DESIGNED BY S. DEBNATH
DRAWN BY R. COLLADO
CHECKED BY E. BALLADA
IN CHARGE R. BARLAAN
DATE 20130710

LICENSED ARCHITECT SOMESH DEBNATH No. C21523 STATE OF CALIFORNIA

Skanska Shimmick Herzog
1436 California Circle
Milpitas, California 95035
A Joint Venture

Anil Verma Associates, Inc.
1970 Broadway, Suite 525 Oakland, CA 94612
Phone: (510) 835-2537 Fax: (510) 535-2339

Lockwood, Andrews & Newnam, Inc. A LAN & BATTY COMPANY
T·Y·LIN INTERNATIONAL

SUBMITTED _____
APPROVED _____

VTA BART SILICON VALLEY
BART SILICON VALLEY BERRYESSA EXTENSION

LINE, TRACK, STATIONS AND SYSTEMS
DESIGN UNIT 023
MILPITAS STATION
EXTERIOR ELEVATION
EAST
SHEET 5 OF 6

CADD FILENAME C700-S-DB-A315X.dwg
SIZE D | SCALE 1/8"=1'-0"
CONTRACT NO. C700 | REV. 0
AREA CODE DB | SHEET NO. A315X | PAGE NO. 0398

JosephG Jun 26, 2013 – 5:20pm G:\Current Projects\VTA-Berryessa Extension Project\Station – Milpitas\CAD\Drawings Out\13-0710 C700 Milpitas Station – RFC Submit\C700-S-DB-A315X.dwg

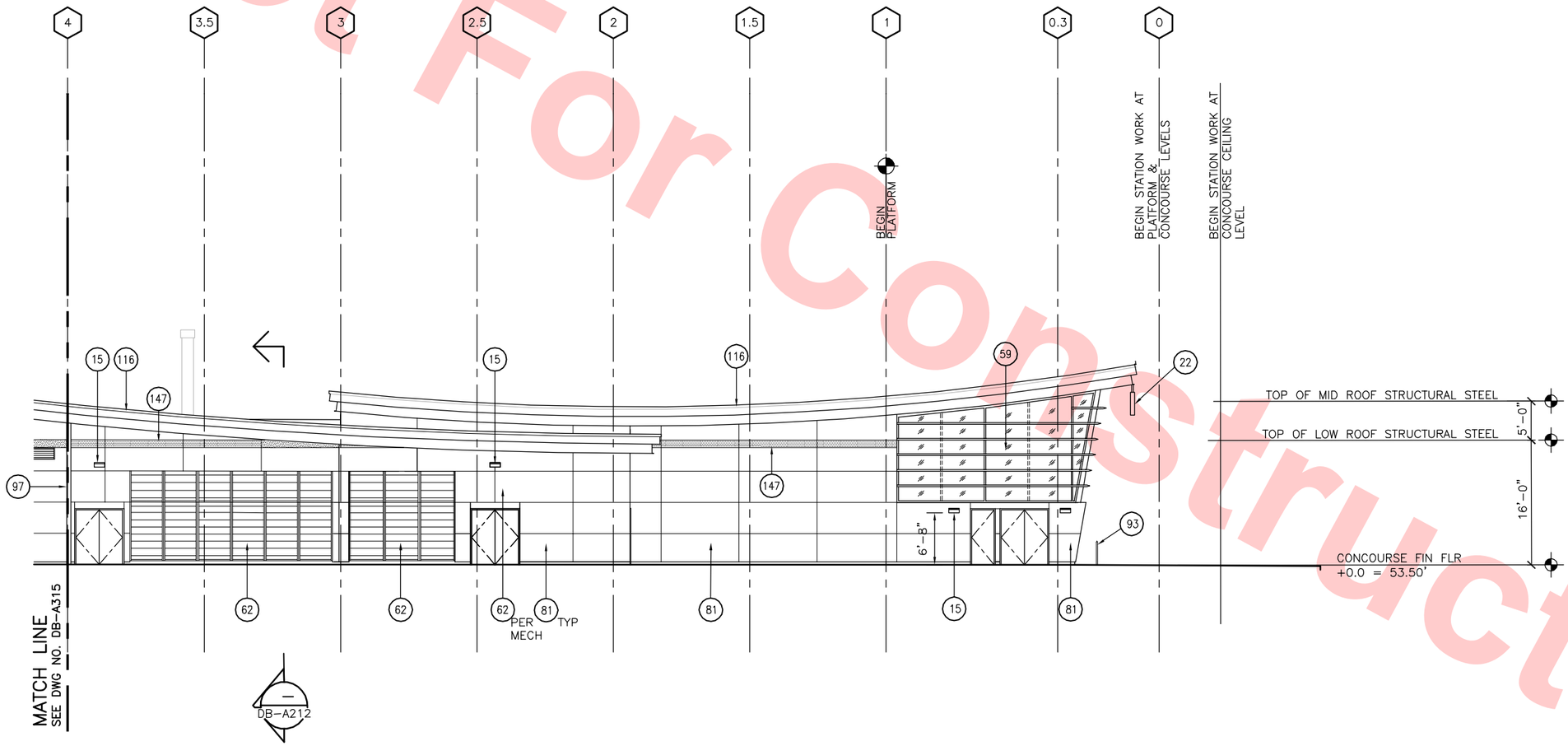

EXTERIOR ELEVATION—EAST

SCALE: 1/8"=1'-0"

DB-A121X
DB-A141
DB-A310X

KEY NOTES

15 LIGHT FIXTURE
16 REMOVABLE LOUVERS
22 SIGN (REFER TO SIGNAGE DRAWINGS)
50 OVERHEAD COILING DOOR
59 GLASS WALL SYSTEM TYPE 3
62 LOUVER
81 COMPOSITE WALL PANEL WP-1, SEE DWG NO. DB-A701
93 RAILING-STAINLESS STEEL
116 ARCHITECTURAL METAL FASCIA, RF-1, SEE DWG NO. DB-A701
147 METAL PANEL ACCENT BAND WP-1A, SEE DWG NO. DB-A701

NOTE

FOR DIMENSIONS OF ROOF GEOMETRY, SEE DWG NO. DB-A303, SIM

Santa Clara Valley Transportation Authority

____NO EXCEPTIONS TAKEN (NET)
____MAKE CORRECTIONS NOTED (MCN)
____AMEND AND RESUBMIT (A/R)

Any action shown above is subject to the terms of the contract and does not relieve the Contractor of any of its obligations under the contract, including design and detailing.

Contract No.: DB11002F

By: _____ **Date:** _____

8' 0' 8' 16'

GRAPHIC SCALE

KEY ELEVATION

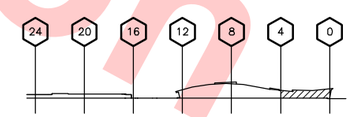

Not For Construction

REV	DATE	BY	SUB	APP	DESCRIPTION
0	20130710				READINESS FOR CONSTRUCTION
					REPLACES C-700-S-DB-A313, REV. P

DESIGNED BY S. DEBNATH
DRAWN BY R. COLLADO
CHECKED BY E. BALLADA
IN CHARGE R. BARLAAN
DATE 20130710

LICENSED ARCHITECT SOMESH DEBNATH No. C21523 STATE OF CALIFORNIA

Skanska Shimmick Herzog
1436 California Circle
Milpitas, California 95035
A Joint Venture

Anil Verma Associates, Inc.
1970 Broadway, Suite 525, Oakland, CA 94612
Phone: (510) 835-2537 Fax: (510) 835-2339

Lockwood, Andrews & Newnam, Inc. A LAN & BAYH COMPANY
T·Y·LIN INTERNATIONAL

SUBMITTED _____
APPROVED _____

VTA BART SILICON VALLEY
BART SILICON VALLEY BERRYESSA EXTENSION

LINE, TRACK, STATIONS AND SYSTEMS
DESIGN UNIT 023
MILPITAS STATION
EXTERIOR ELEVATION
EAST
SHEET 6 OF 6

CADD FILENAME C700-S-DB-A316X.dwg
SIZE D | SCALE 1/8"=1'-0"
CONTRACT NO. C700 | REV. 0
AREA CODE DB | SHEET NO. A316X | PAGE NO. 0399

JosephG Jun 26, 2013 – 5:15pm G:\Current Projects\VTA-Berryessa Extension Project\Station – Milpitas\CAD\Drawings Out\13-0710 C700 Milpitas Station – RFC Submit\C700-S-DB-A316X.dwg

Not For Construction

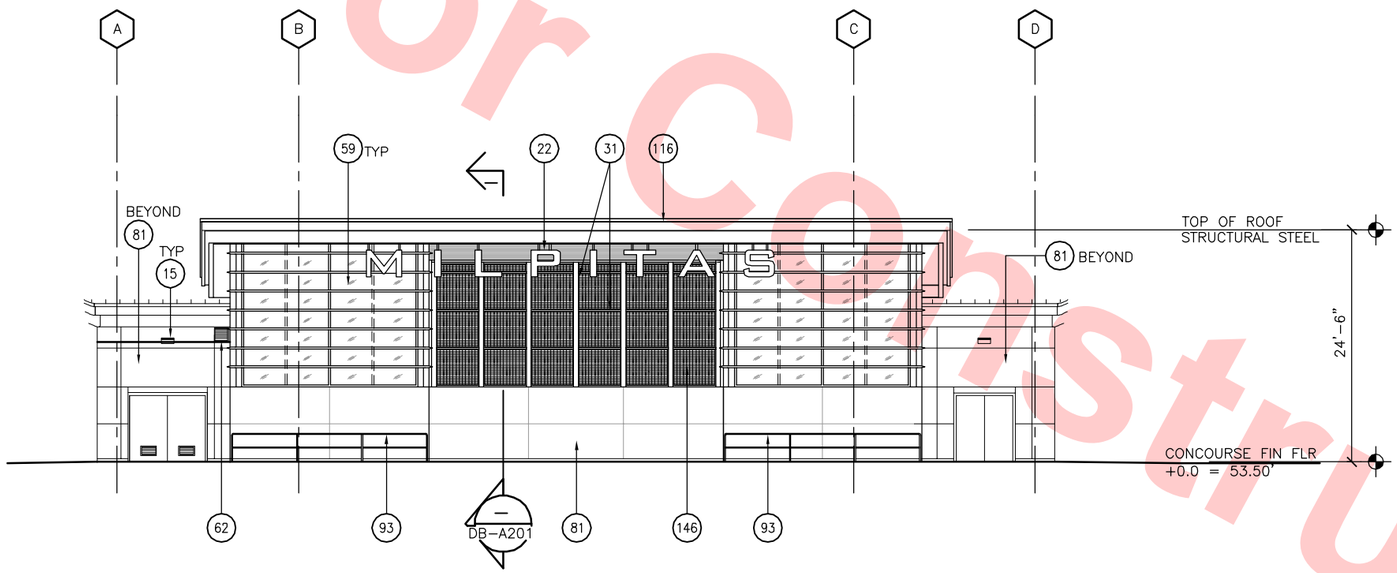

EXTERIOR ELEVATION – NORTH

SCALE: 1/8"=1'-0"

DB-A120X
DB-A121X
DB-A130
DB-A140

KEY NOTES

15 LIGHT FIXTURE
22 SIGN (REFER TO SIGNAGE DRAWINGS)
31 STRUCTURAL MEMBER
59 GLASS WALL SYSTEM TYPE 3
81 COMPOSITE WALL PANEL WP-1, SEE DWG NO. DB-A701
93 RAILING-STAINLESS STEEL
116 ARCHITECTURAL METAL FASCIA, RF-1, SEE DWG NO. DB-A701
146 DECORATIVE STAINLESS STEEL MESH

Santa Clara Valley Transportation Authority

____NO EXCEPTIONS TAKEN (NET)
____MAKE CORRECTIONS NOTED (MCN)
____AMEND AND RESUBMIT (A/R)

Any action shown above is subject to the terms of the contract and does not relieve the Contractor of any of its obligations under the contract, including design and detailing.

Contract No.: DB11002F

By: _____ **Date:** _____

8' 0' 8' 16'
GRAPHIC SCALE

REV	DATE	BY	SUB	APP	DESCRIPTION
0	20130710				READINESS FOR CONSTRUCTION

DESIGNED BY S. DEBNATH
DRAWN BY R. COLLADO
CHECKED BY E. BALLADA
IN CHARGE R. BARLAAN
DATE 20130710

LICENSED ARCHITECT SOMESH DEBNATH No. C21523 STATE OF CALIFORNIA

Skanska Shimmick Herzog
1436 California Circle
Milpitas, California 95035
A Joint Venture

Anil Verma Associates, Inc.
1970 Broadway, Suite 525, Oakland, CA 94612
Phone: (510) 835-2537 Fax: (510) 835-2339

SUBMITTED

Lockwood, Andrews & Newnam, Inc. A LEO A DALY COMPANY
T·Y·LIN INTERNATIONAL

APPROVED

VTA BART SILICON VALLEY
BART SILICON VALLEY BERRYESSA EXTENSION

LINE, TRACK, STATIONS AND SYSTEMS
DESIGN UNIT 023
MILPITAS STATION

EXTERIOR ELEVATION
CONCOURSE BUILDING NORTH

CADD FILENAME C700-S-DB-A321.dwg
SIZE D | SCALE 1/8"=1'-0"
CONTRACT NO. C700 | REV. 0
AREA CODE DB | SHEET NO. A321 | PAGE NO. 0400

JosephG Jun 26, 2013 – 1:55pm G:\Current Projects\VTA-Berryessa Extension Project\Station – Milpitas\CAD\Drawings Out\13-0710 C700 Milpitas Station – RFC Submit\C700-S-DB-A321.dwg

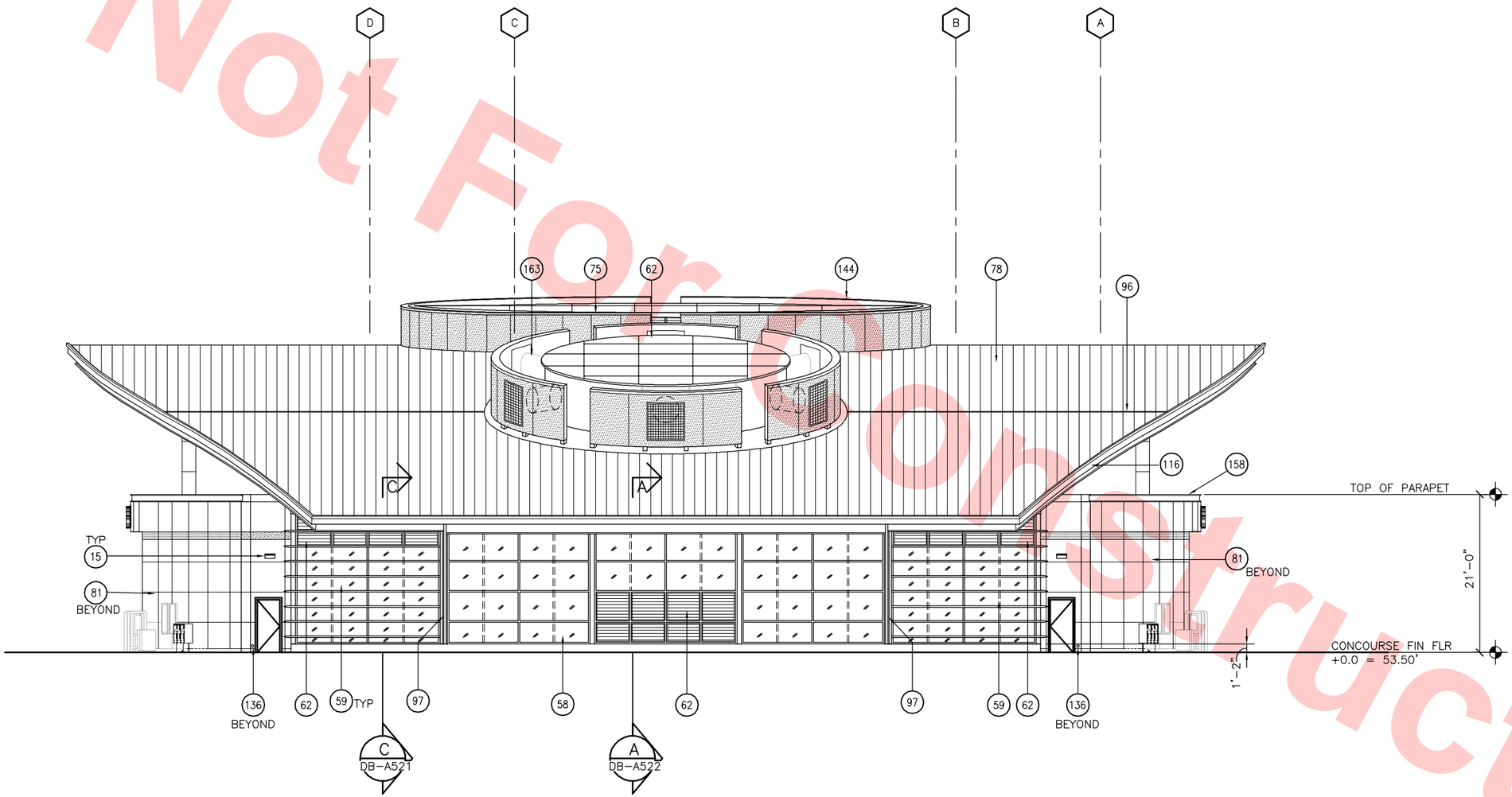

EXTERIOR ELEVATION – SOUTH

SCALE: 1/8"=1'-0"

DB-A120X
DB-A126X
DB-A130
DB-A140

KEY NOTES

- 15 LIGHT FIXTURE
- 58 GLASS WALL SYSTEM TYPE 2
- 59 GLASS WALL SYSTEM TYPE 3
- 62 LOUVER
- 75 HORIZONTAL STRUCTURAL POINT SUPPORTED GLASS SKYLIGHT SYSTEM
- 78 METAL ROOFING
- 81 COMPOSITE WALL PANEL WP–1, SEE DWG NO. DB–A701
- 96 GUTTER
- 97 DOWNSPOUT/RAINWATER LEADER
- 116 ARCHITECTURAL METAL FASCIA, RF–1, SEE DWG NO. DB–A701
- 136 OVERFLOW NOZZLE – SEE PLUMBING DRAWINGS
- 144 WIND FENCE
- 158 PARAPET ARCHITECTURAL METAL FASCIA, WP–1, SEE DWG NO. DB–A701
- 163 SKYLIGHT SMOKE EVACUATION FAN

Santa Clara Valley Transportation Authority

____NO EXCEPTIONS TAKEN (NET)
____MAKE CORRECTIONS NOTED (MCN)
____AMEND AND RESUBMIT (A/R)

Any action shown above is subject to the terms of the contract and does not relieve the Contractor of any of its obligations under the contract, including design and detailing.

Contract No.: DB11002F

By: _____ Date: _____

8' 0' 8' 16'
GRAPHIC SCALE

Not For Construction

REV	DATE	BY	SUB	APP	DESCRIPTION
0	20130710				READINESS FOR CONSTRUCTION

DESIGNED BY S. DEBNATH
DRAWN BY R. COLLADO
CHECKED BY E. BALLADA
IN CHARGE R. BARLAAN
DATE 20130710

LICENSED ARCHITECT SAMESH DEBNATH No. C21523 STATE OF CALIFORNIA

Skanska Shimmick Herzog
1436 California Circle
Milpitas, California 95035
A Joint Venture

Anil Verma Associates, Inc.
1970 Broadway, Suite 525 Oakland, CA 94612
Phone: (510) 835-2537 Fax: (510) 535-2339
SUBMITTED

Lockwood, Andrews & Newnam, Inc. A LAN & BALLY COMPANY
T·Y·LIN INTERNATIONAL
APPROVED

VTA BART SILICON VALLEY
BART SILICON VALLEY BERRYESSA EXTENSION

LINE, TRACK, STATIONS AND SYSTEMS
DESIGN UNIT 023
MILPITAS STATION

EXTERIOR ELEVATION
CONCOURSE BUILDING SOUTH

CADD FILENAME C700–S–DB–A322.dwg
SIZE D | SCALE 1/8"=1'–0"
CONTRACT NO. C700 | REV. 0
AREA CODE DB | SHEET NO. A322 | PAGE NO. 0401

JosephG Jun 26, 2013 – 1:56pm G:\Current Projects\VTA-Berryessa Extension Project\Station – Milpitas\CAD\Drawings Out\13-0710 C700 Milpitas Station – RFC Submit\C700-S-DB-A322.dwg

Not For Construction

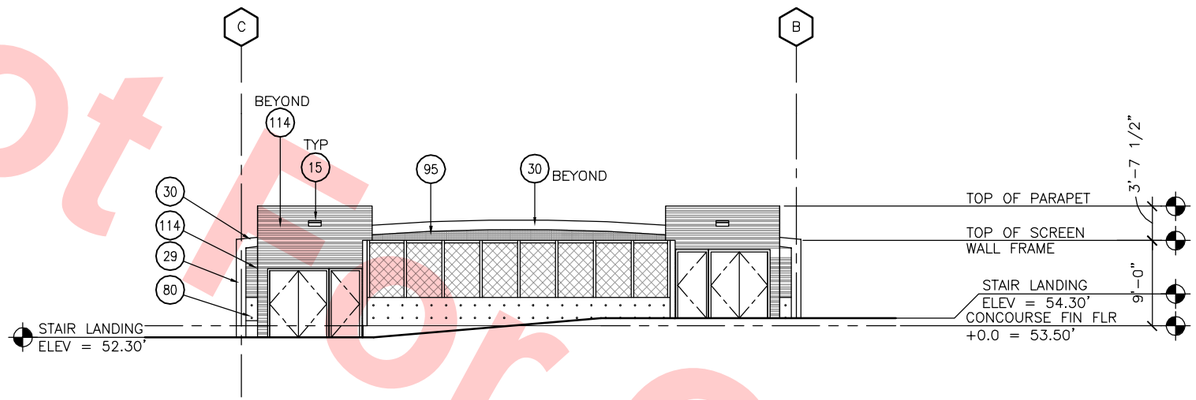

EXTERIOR ELEVATION

SOUTH
SCALE: 1/8"=1'-0"

A
DB-A323

DB-A120X
DB-A128X
DB-A140

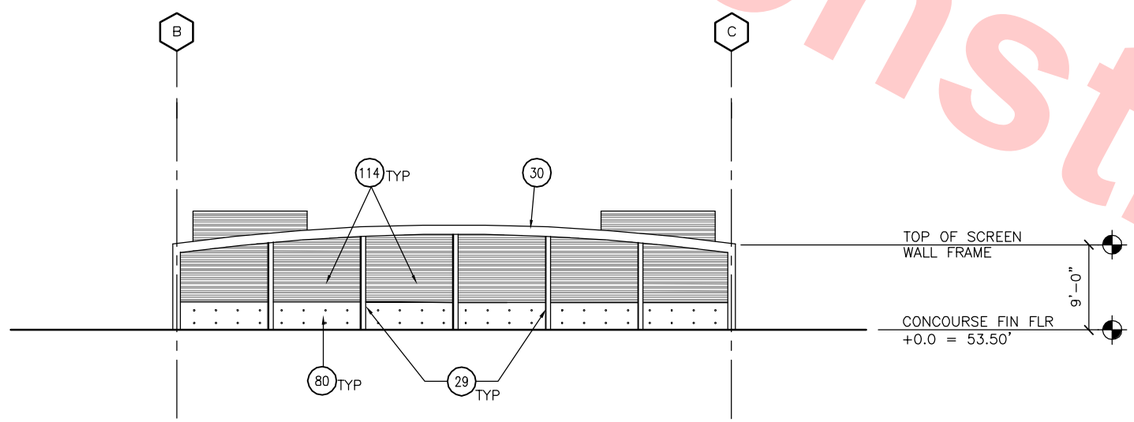

EXTERIOR ELEVATION

NORTH
SCALE: 1/8"=1'-0"

B
DB-A323

DB-A120X
DB-A127X
DB-A140

KEY NOTES

- 15 LIGHT FIXTURE
- 29 STRUCTURAL COLUMN
- 30 STRUCTURAL BEAM
- 80 PRECAST ARCHITECTURAL CONCRETE WALL PANEL WP-3, SEE DWG NO. DB-A701
- 95 BIRD/SAFETY NETTING
- 114 METAL WALL PANEL WP-2, SEE DWG NO. DB-A701

Santa Clara Valley Transportation Authority

____NO EXCEPTIONS TAKEN (NET)
____MAKE CORRECTIONS NOTED (MCN)
____AMEND AND RESUBMIT (A/R)

Any action shown above is subject to the terms of the contract and does not relieve the Contractor of any of its obligations under the contract, including design and detailing.

Contract No.: DB11002F

By: _____ **Date:** _____

8' 0' 8' 16'
GRAPHIC SCALE

REV	DATE	BY	SUB	APP	DESCRIPTION
0	20130710				READINESS FOR CONSTRUCTION

DESIGNED BY S. DEBNATH
DRAWN BY R. COLLADO
CHECKED BY E. BALLADA
IN CHARGE R. BARLAAN
DATE 20130710

LICENSED ARCHITECT SOMESH DEBNATH No. C21523 STATE OF CALIFORNIA

Skanska Shimmick Herzog
1436 California Circle
Milpitas, California 95035
A Joint Venture

Anil Verma Associates, Inc.
1970 Broadway, Suite 525, Oakland, CA 94612
Phone: (510) 835-2537 Fax: (510) 835-2339

Lockwood, Andrews & Newnam, Inc. A LAN & RAIN COMPANY
T·Y·LIN INTERNATIONAL

SUBMITTED _____
APPROVED _____

VTA BART SILICON VALLEY
BART SILICON VALLEY BERRYESSA EXTENSION

LINE, TRACK, STATIONS AND SYSTEMS
DESIGN UNIT 023
MILPITAS STATION

EXTERIOR ELEVATIONS
ANCILLARY FACILITY, NORTH AND SOUTH

CADD FILENAME C700-S-DB-A323.dwg
SIZE D | SCALE 1/8"=1'-0"
CONTRACT NO. C700 | REV. 0
AREA CODE DB | SHEET NO. A323 | PAGE NO. 0402

Jun 26, 2013 - 1:56pm G:\Current Projects\VTA-Berryessa Extension Project\Station - Milpitas\CAD\Drawings Out\13-0710 C700 Milpitas Station - RFC Submit\C700-S-DB-A323.dwg
JosephG

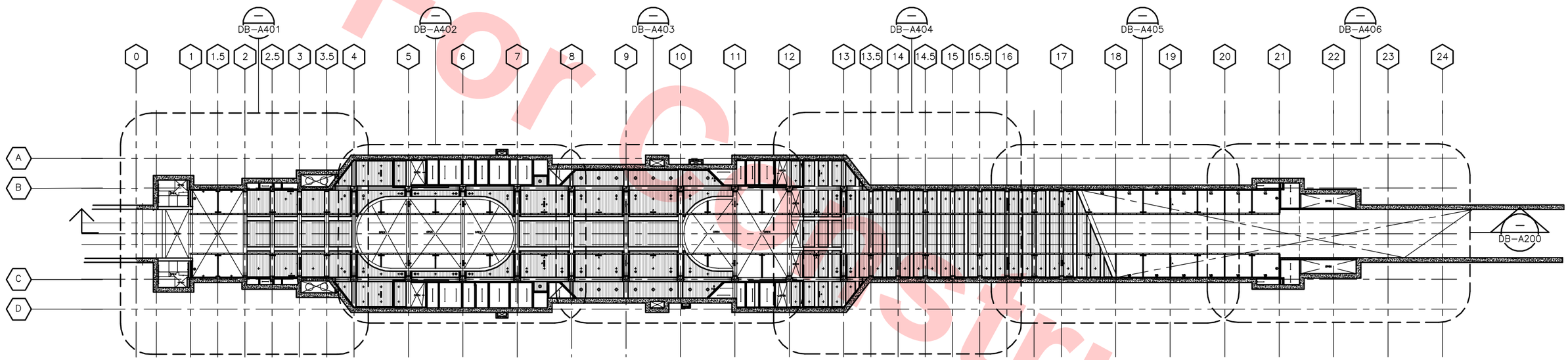

NOTE:

FOR UTILITY PIPE SLEEVES LAYOUT
SEE SHEET DB–A218

KEY PLAN – PLATFORM LEVEL REFLECTED CEILING PLAN

SCALE: 1/32"=1'–0"

Santa Clara Valley Transportation Authority

____NO EXCEPTIONS TAKEN (NET)
____MAKE CORRECTIONS NOTED (MCN)
____AMEND AND RESUBMIT (A/R)

Any action shown above is subject to the terms of the contract and does not relieve the Contractor of any of its obligations under the contract, including design and detailing.

Contract No.: DB11002F

By: _____ Date: _____

32' 0' 32' 64'
GRAPHIC SCALE

Not For Construction

REV	DATE	BY	SUB	APP	DESCRIPTION
0	20130710				READINESS FOR CONSTRUCTION

DESIGNED BY S. DEBNATH
DRAWN BY R. COLLADO
CHECKED BY E. BALLADA
IN CHARGE R. BARLAAN
DATE 20130710

LICENSED ARCHITECT SAMESH DEBNATH No. C21523 STATE OF CALIFORNIA

Skanska Shimmick Herzog
1436 California Circle
Milpitas, California 95035
A Joint Venture

Anil Verma Associates, Inc.
1970 Broadway, Suite 535 Oakland, CA 94612
Phone: (510) 835-2537 Fax: (510) 835-2339

Lockwood, Andrews & Newnam, Inc. A CH2M HILL COMPANY
T·Y·LIN INTERNATIONAL

SUBMITTED
APPROVED

VTA BART SILICON VALLEY
BART SILICON VALLEY BERRYESSA EXTENSION

LINE, TRACK, STATIONS AND SYSTEMS
DESIGN UNIT 023
MILPITAS STATION
KEY PLAN
PLATFORM LEVEL
REFLECTED CEILING PLAN

CADD FILENAME C700–S–DB–A400.dwg
SIZE D | SCALE 1/32"=1'–0"
CONTRACT NO. C700 | REV. 0
AREA CODE DB | SHEET NO. A400 | PAGE NO. 0403

JosephG Jun 26, 2013 – 1:57pm G:\Current Projects\VTA–Berryessa Extension Project\Station – Milpitas\CAD\Drawings Out\13–0710 C700 Milpitas Station – RFC Submittal\C700–S–DB–A400.dwg

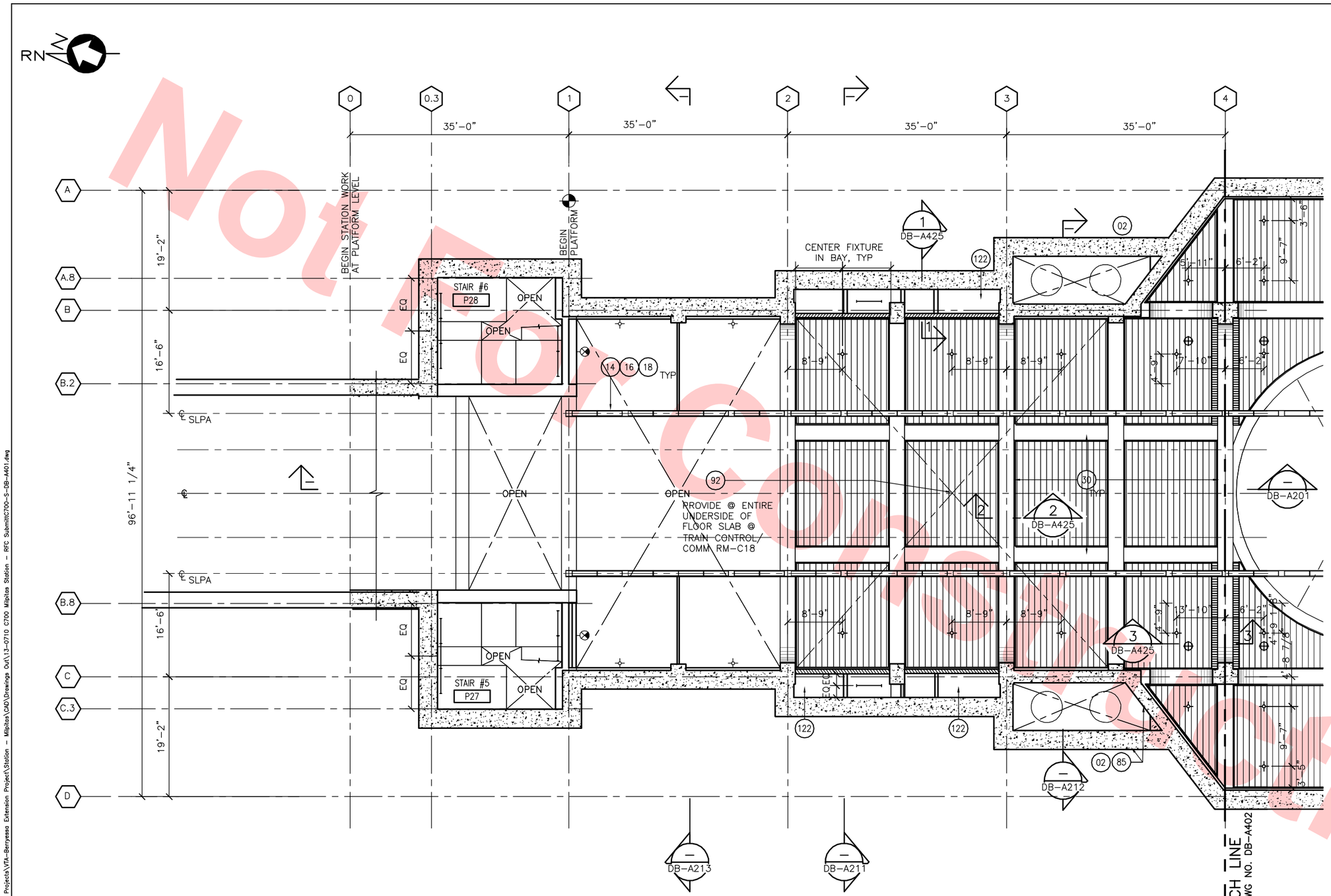

PLATFORM LEVEL REFLECTED CEILING PLAN

SCALE: 1/8"=1'-0"

DB-A400

KEY NOTES

- (02) SUPPLY AIR RISER SHAFT TO CONCOURSE LEVEL
- (14) SLPA – SEE BFS SHTS AS44, AS45 AND SEE ELEC/COMM/SECURITY DRAWINGS
- (16) LINEAR FLUORESCENT DOWNLIGHT INTEGRAL WITH SLPA, SEE ELECTRICAL DRAWINGS
- (18) SPEAKER INTEGRAL WITH SLPA
- (30) BEAM – SEE STRUCTURAL DRAWINGS
- (85) RETAINING WALL
- (92) THERMAL INSULATION R-13
- (122) SHAFT

LEGEND

- SUSPENDED LINEAR METAL CEILING
- LINEAR FLUORESCENT STRIP LIGHT
- RECESSED METAL HALIDE
- WALL MOUNTED CYLINDER DOWNLIGHT
- RECESSED ACCENT LIGHT
- EXIT LIGHT
- LINEAR RECESSED ARCH WASHER FEATURE

Santa Clara Valley Transportation Authority

____NO EXCEPTIONS TAKEN (NET)
____MAKE CORRECTIONS NOTED (MCN)
____AMEND AND RESUBMIT (A/R)

Any action shown above is subject to the terms of the contract and does not relieve the Contractor of any of its obligations under the contract, including design and detailing.

Contract No.: DB11002F

By: _____ **Date:** _____

8' 0' 8' 16'

GRAPHIC SCALE

KEY PLAN

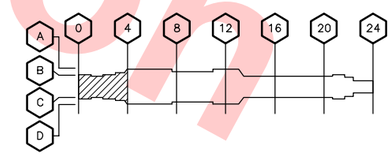

Not For Construction

REV	DATE	BY	SUB	APP	DESCRIPTION
0	20130710				READINESS FOR CONSTRUCTION

DESIGNED BY S. DEBNATH
DRAWN BY R. COLLADO
CHECKED BY E. BALLADA
IN CHARGE R. BARLAAN
DATE 20130710

LICENSED ARCHITECT SOMESH DEBNATH No. C21523 STATE OF CALIFORNIA

Skanska Shimmick Herzog
1436 California Circle
Milpitas, California 95035
A Joint Venture

Anil Verma Associates, Inc.
1970 Broadway, Suite 525, Oakland, CA 94612
Phone: (510) 835-2537 Fax: (510) 835-2339

Lockwood, Andrews & Newnam, Inc. A LEO A DALY COMPANY

T·Y·LIN INTERNATIONAL

SUBMITTED _____ APPROVED _____

VTA BART SILICON VALLEY

BART SILICON VALLEY BERRYESSA EXTENSION

LINE, TRACK, STATIONS AND SYSTEMS
DESIGN UNIT 023
MILPITAS STATION
PLATFORM LEVEL
REFLECTED CEILING PLAN
SHEET 1 OF 6

CADD FILENAME C700-S-DB-A401.dwg
SIZE D | SCALE 1/8"=1'-0"
CONTRACT NO. C700 | REV. 0
AREA CODE DB | SHEET NO. A401 | PAGE NO. 0404

JosephG Jun 26, 2013 – 1:57pm G:\Current Projects\VTA-Berryessa Extension Project\Station – Milpitas\CAD\Drawings Out\13-0710 C700 Milpitas Station – RFC Submit\C700-S-DB-A401.dwg

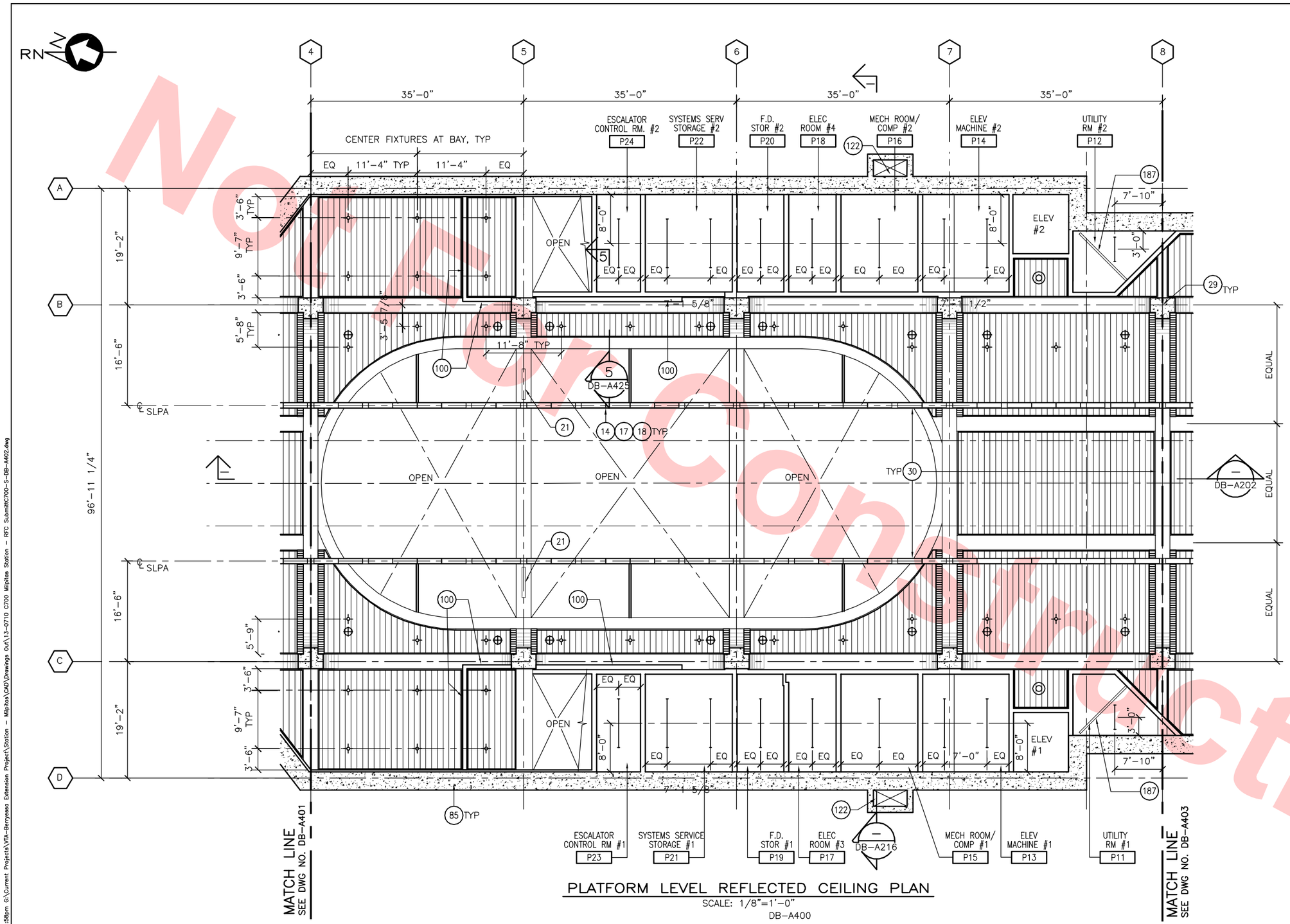

PLATFORM LEVEL REFLECTED CEILING PLAN

SCALE: 1/8"=1'-0"

DB-A400

KEY NOTES

- (14) SLPA – SEE BFS SHTS AS44, AS45 AND SEE ELEC/COMM/SECURITY DWGS.
- (17) LINEAR FLUORESCENT DOWNLIGHT INTEGRAL WITH SLPA, SEE ELECTRICAL DRAWINGS
- (18) SPEAKER INTEGRAL WITH SLPA
- (21) DESTINATION SIGN UNIT, SEE SYSTEMS DRAWINGS
- (29) STRUCTURAL COLUMN
- (30) STRUCTURAL BEAM
- (85) RETAINING WALL
- (100) SMOKE DRAFT STOP
- (122) SHAFT
- (187) PUMP EXTRACTION EQUIPMENT HOIST

LEGEND

- SUSPENDED LINEAR METAL CEILING
- EXPOSED STRUCTURE
- LINEAR FLUORESCENT STRIP LIGHT
- RECESSED METAL HALIDE
- WALL MOUNTED CYLINDER DOWNLIGHT
- RECESSED FLUORESCENT WHITE ACRYLIC DOME
- RECESSED ACCENT LIGHT
- LINEAR RECESSED ARCH WASHER FEATURE

Santa Clara Valley Transportation Authority

____NO EXCEPTIONS TAKEN (NET)
____MAKE CORRECTIONS NOTED (MCN)
____AMEND AND RESUBMIT (A/R)

Any action shown above is subject to the terms of the contract and does not relieve the Contractor of any of its obligations under the contract, including design and detailing.

Contract No.: DB11002F

By: _____ **Date:** _____

8' 0' 8' 16'

GRAPHIC SCALE

KEY PLAN

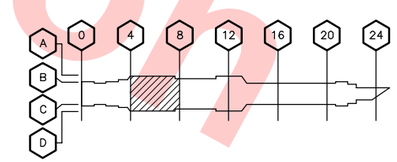

Not For Construction

REV	DATE	BY	SUB	APP	DESCRIPTION
0	20130710				READINESS FOR CONSTRUCTION

DESIGNED BY S. DEBNATH
DRAWN BY R. COLLADO
CHECKED BY E. BALLADA
IN CHARGE R. BARLAAN
DATE 20130710

LICENSED ARCHITECT SOMESH DEBNATH No. C21523 STATE OF CALIFORNIA

Skanska Shimmick Herzog
1436 California Circle
Milpitas, California 95035
A Joint Venture

Anil Verma Associates, Inc.
1970 Broadway, Suite 525, Oakland, CA 94612
Phone: (510) 835-2537 Fax: (510) 835-2339

Lockwood, Andrews & Newnam, Inc. A LEO A DALY COMPANY

T·Y·LIN INTERNATIONAL

SUBMITTED _____ APPROVED _____

VTA BART SILICON VALLEY

BART SILICON VALLEY BERRYESSA EXTENSION

LINE, TRACK, STATIONS AND SYSTEMS
DESIGN UNIT 023
MILPITAS STATION
PLATFORM LEVEL
REFLECTED CEILING PLAN
SHEET 2 OF 6

CADD FILENAME C700-S-DB-A402.dwg
SIZE D | SCALE 1/8"=1'-0"
CONTRACT NO. C700 | REV. 0
AREA CODE DB | SHEET NO. A402 | PAGE NO. 0405

JosephG Jun 26, 2013 – 1:58pm G:\Current Projects\VTA-Berryessa Extension Project\Station – Milpitas\CAD\Drawings Out\13-0710 C700 Milpitas Station – RFC Submittal\C700-S-DB-A402.dwg

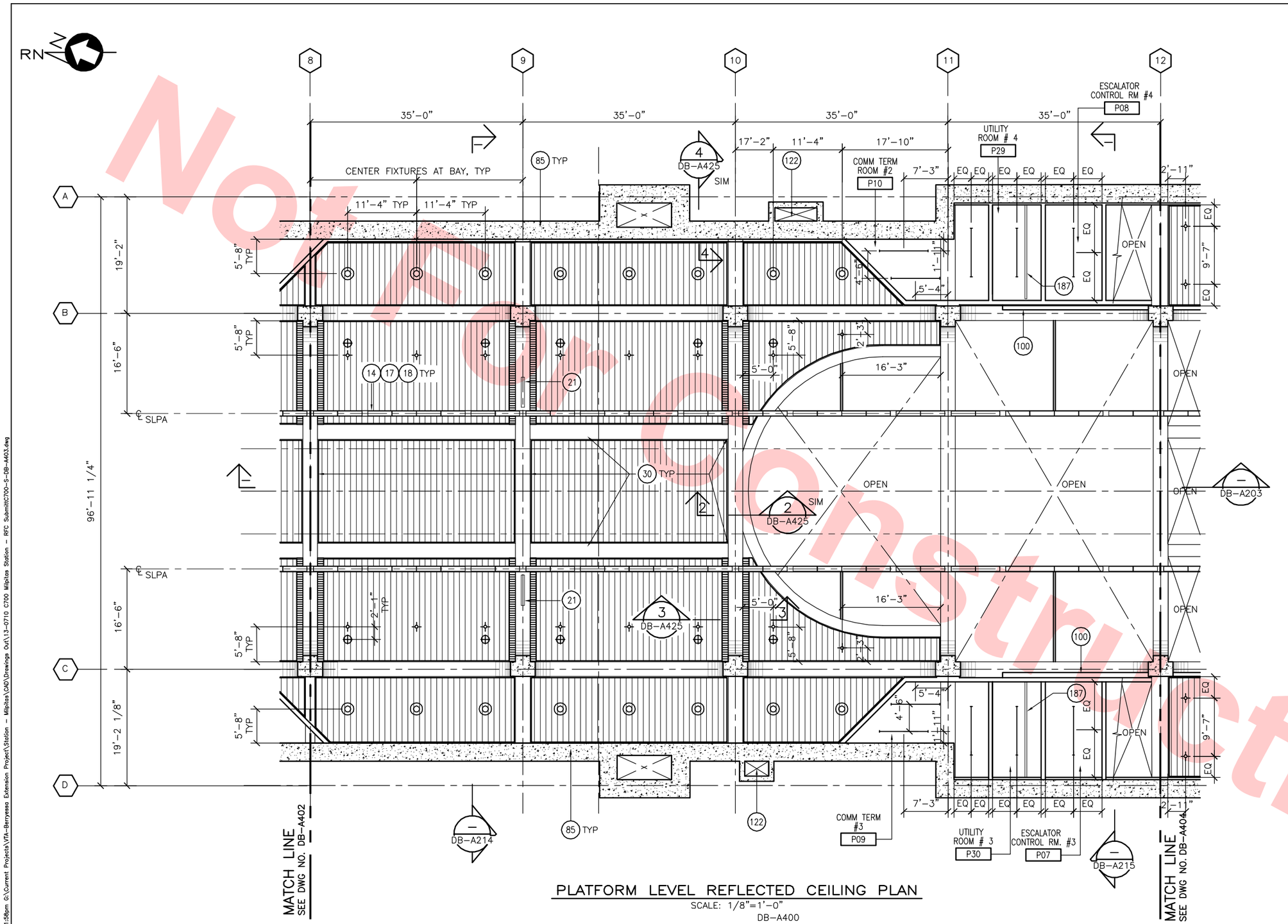

PLATFORM LEVEL REFLECTED CEILING PLAN

SCALE: 1/8"=1'-0"

DB-A400

KEY NOTES

- (14) SLPA – SEE BFS SHTS AS44, AS45 AND SEE ELEC/COMM/SECURITY DWGS.
- (17) LINEAR FLUORESCENT DOWNLIGHT INTEGRAL WITH SLPA, SEE ELECTRICAL DRAWINGS
- (18) SPEAKER INTEGRAL WITH SLPA
- (21) DESTINATION SIGN UNIT, SEE SYSTEMS DRAWINGS
- (30) STRUCTURAL BEAM
- (85) RETAINING WALL
- (100) SMOKE DRAFT STOP
- (122) SHAFT
- (187) PUMP EXTRACTION EQUIPMENT HOIST

LEGEND

- SUSPENDED LINEAR METAL CEILING
- EXPOSED STRUCTURE
- LINEAR FLUORESCENT STRIP LIGHT
- RECESSED METAL HALIDE
- RECESSED FLUORESCENT WHITE ACRYLIC DOME
- RECESSED ACCENT LIGHT
- LINEAR RECESSED ARCH WASHER FIXTURE

Santa Clara Valley Transportation Authority

____NO EXCEPTIONS TAKEN (NET)
____MAKE CORRECTIONS NOTED (MCN)
____AMEND AND RESUBMIT (A/R)

Any action shown above is subject to the terms of the contract and does not relieve the Contractor of any of its obligations under the contract, including design and detailing.

Contract No.: DB11002F

By: _____ **Date:** _____

8' 0' 8' 16'

GRAPHIC SCALE

KEY PLAN

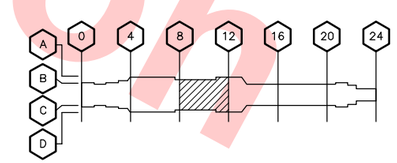

Not For Construction

REV	DATE	BY	SUB	APP	DESCRIPTION
0	20130710				READINESS FOR CONSTRUCTION

DESIGNED BY S. DEBNATH
DRAWN BY R. COLLADO
CHECKED BY E. BALLADA
IN CHARGE R. BARLAAN
DATE 20130710

LICENSED ARCHITECT Suresh Debnath No. C21523 STATE OF CALIFORNIA

Skanska Shimmick Herzog
1436 California Circle
Milpitas, California 95035
A Joint Venture

Anil Verma Associates, Inc.
1970 Broadway, Suite 525 Oakland, CA 94612
Phone: (510) 835-2537 Fax: (510) 835-2339

SUBMITTED

Lockwood, Andrews & Newnam, Inc. A LEO A DALY COMPANY
T·Y·LIN INTERNATIONAL

APPROVED

BART SILICON VALLEY
BART SILICON VALLEY BERRYESSA EXTENSION

LINE, TRACK, STATIONS AND SYSTEMS
DESIGN UNIT 023
MILPITAS STATION
PLATFORM LEVEL
REFLECTED CEILING PLAN
SHEET 3 OF 6

CADD FILENAME C700-S-DB-A403.dwg
SIZE D | SCALE 1/8"=1'-0"
CONTRACT NO. C700 | REV. 0
AREA CODE DB | SHEET NO. A403 | PAGE NO. 0406

JosephG Jun 26, 2013 – 1:58pm G:\Current Projects\VTA-Berryessa Extension Project\Station – Milpitas\CAD\Drawings Out\13-0710 C700 Milpitas Station – RFC Submit\C700-S-DB-A403.dwg

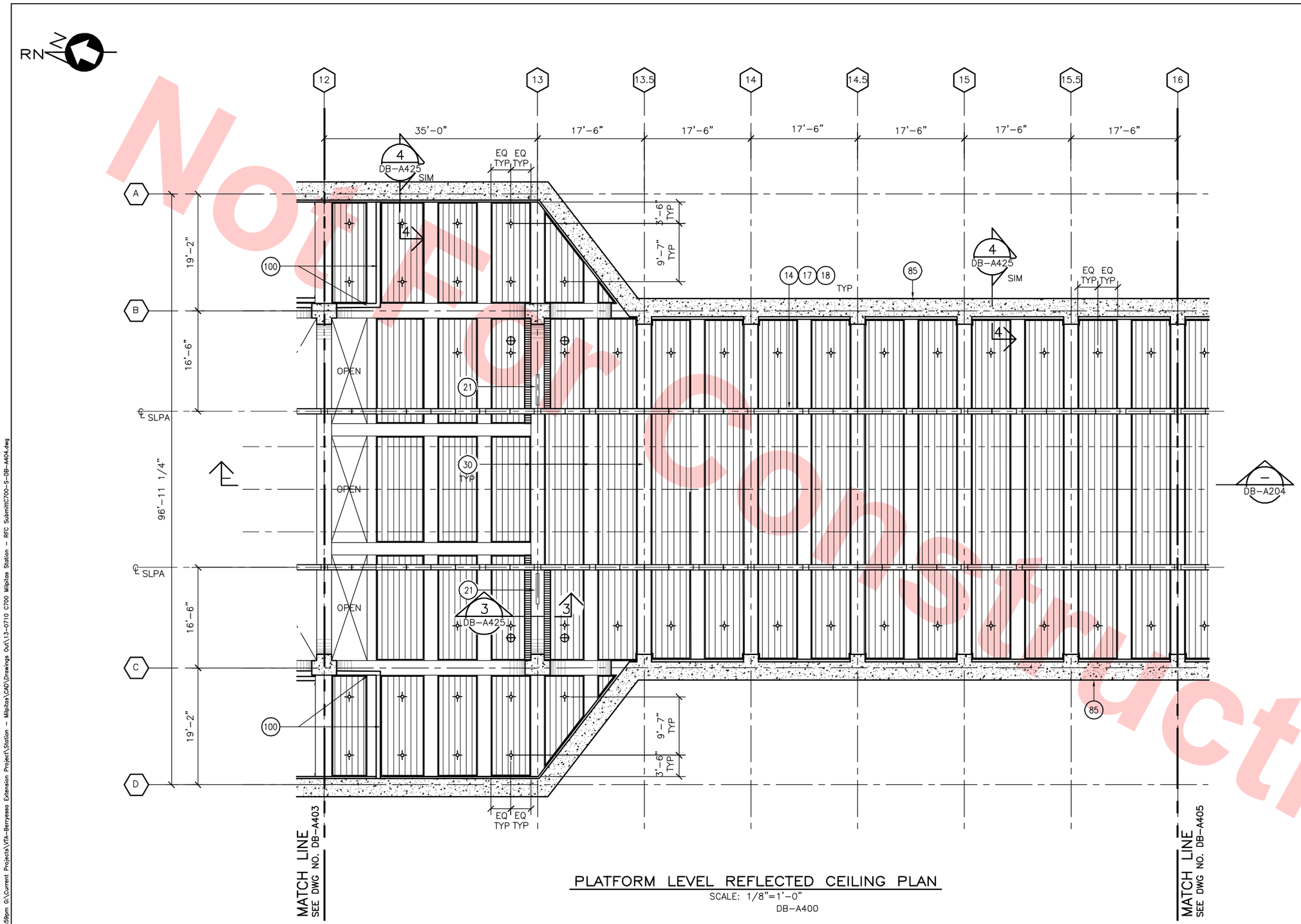

PLATFORM LEVEL REFLECTED CEILING PLAN

SCALE: 1/8"=1'-0"

DB-A400

KEY NOTES

- (14) SLPA – SEE BFS SHTS AS44, AS45 AND SEE ELEC/COMM/SECURITY DRAWINGS
- (17) LINEAR FLUORESCENT DOWNLIGHT INTEGRAL WITH SLPA, SEE ELECTRICAL DRAWINGS
- (18) SPEAKER INTEGRAL WITH SLPA
- (21) DESTINATION SIGN UNIT, SEE SYSTEMS DRAWINGS
- (30) STRUCTURAL BEAM
- (85) RETAINING WALL
- (100) SMOKE DRAFT STOP

LEGEND

- SUSPENDED LINEAR METAL CEILING
- RECESSED METAL HALIDE
- RECESSED ACCENT LIGHT
- LINEAR RECESSED ARCH WASHER FIXTURE

Santa Clara Valley Transportation Authority

____NO EXCEPTIONS TAKEN (NET)
____MAKE CORRECTIONS NOTED (MCN)
____AMEND AND RESUBMIT (A/R)

Any action shown above is subject to the terms of the contract and does not relieve the Contractor of any of its obligations under the contract, including design and detailing.

Contract No.: DB11002F

By: _____ Date: _____

8' 0' 8' 16'

GRAPHIC SCALE

KEY PLAN

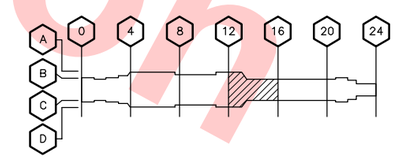

Not For Construction

REV	DATE	BY	SUB	APP	DESCRIPTION
0	20130710				READINESS FOR CONSTRUCTION

DESIGNED BY S. DEBNATH
DRAWN BY R. COLLADO
CHECKED BY E. BALLADA
IN CHARGE R. BARLAAN
DATE 20130710

LICENSED ARCHITECT SOMESH DEBNATH No. C21523 STATE OF CALIFORNIA

Skanska Shimmick Herzog
1436 California Circle
Milpitas, California 95035
A Joint Venture

Anil Verma Associates, Inc.
1970 Broadway, Suite 225
Oakland, CA 94612
Phone: (510) 835-2537 Fax: (510) 835-2339
SUBMITTED

Lockwood, Andrews & Newnam, Inc. A LAN & BALY COMPANY
T·Y·LIN INTERNATIONAL
APPROVED

VTA BART SILICON VALLEY
BART SILICON VALLEY BERRYESSA EXTENSION

LINE, TRACK, STATIONS AND SYSTEMS
DESIGN UNIT 023
MILPITAS STATION
PLATFORM LEVEL
REFLECTED CEILING PLAN
SHEET 4 OF 6

CADD FILENAME C700-S-DB-A404.dwg
SIZE D | SCALE 1/8"=1'-0"
CONTRACT NO. C700 | REV. 0
AREA CODE DB | SHEET NO. A404 | PAGE NO. 0407

JosephG Jun 26, 2013 – 1:59pm G:\Current Projects\VTA-Berryessa Extension Project\Station – Milpitas\CAD\Drawings Out\13-0710 C700 Milpitas Station – RFC Submit\C700-S-DB-A404.dwg

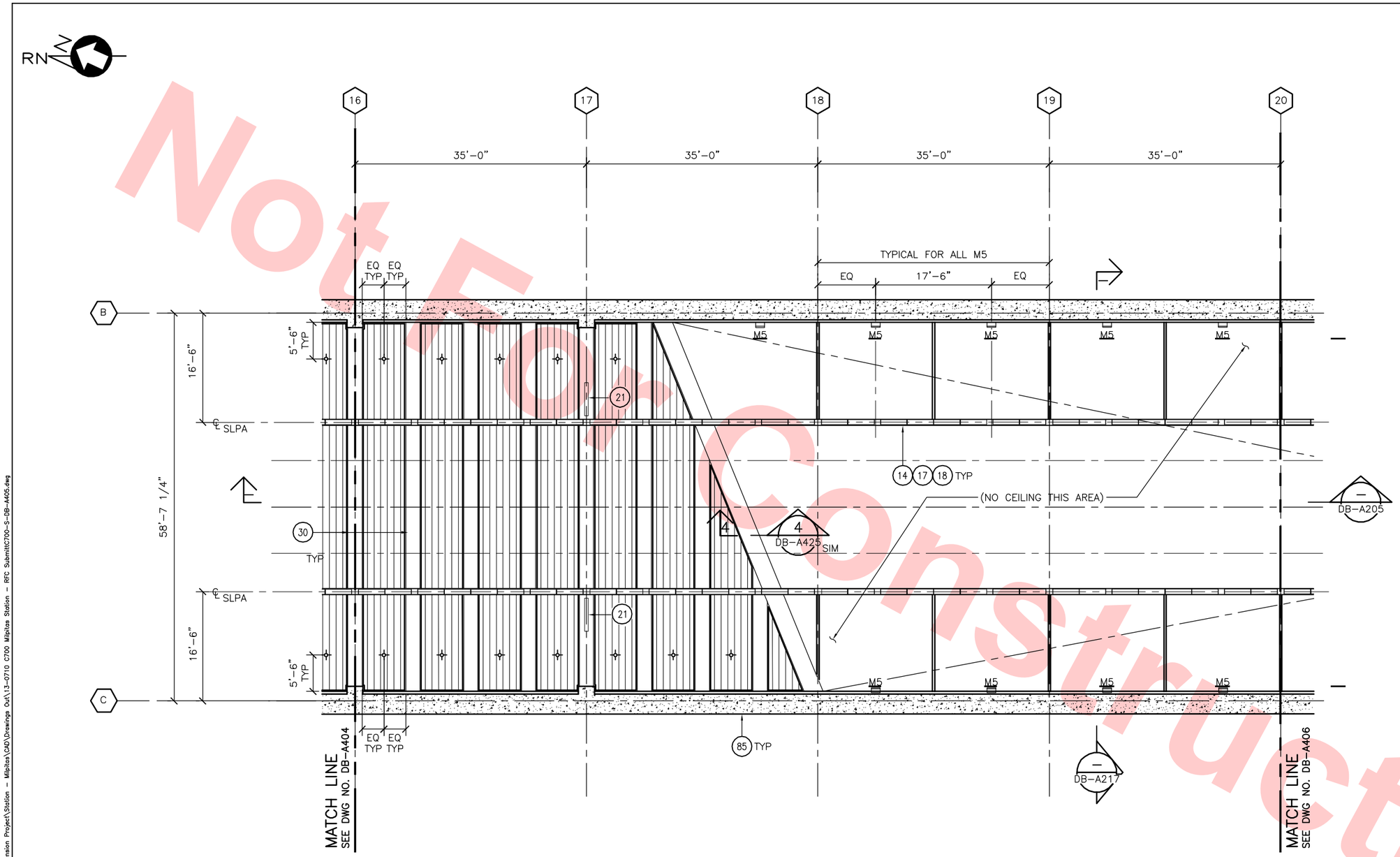

PLATFORM LEVEL REFLECTED CEILING PLAN

SCALE: 1/8"=1'-0"

DB-A400

KEY NOTES

- (14) SLPA – SEE BFS SHTS AS44, AS45 AND SEE ELEC/COMM/SECURITY DRAWINGS
- (17) LINEAR FLUORESCENT DOWNLIGHT INTEGRAL WITH SLPA, SEE ELECTRICAL DRAWINGS
- (18) SPEAKER INTEGRAL WITH SLPA
- (21) DESTINATION SIGN UNIT, SEE SYSTEMS DRAWINGS
- (30) STRUCTURAL BEAM
- (85) RETAINING WALL

LEGEND

- SUSPENDED LINEAR METAL CEILING
- RECESSED METAL HALIDE
- METAL HALIDE WALL SCONCE, MOUNTED @ 10'-0" AFF TO BOTTOM OF FIXTURE.

Santa Clara Valley Transportation Authority

____NO EXCEPTIONS TAKEN (NET)
____MAKE CORRECTIONS NOTED (MCN)
____AMEND AND RESUBMIT (A/R)

Any action shown above is subject to the terms of the contract and does not relieve the Contractor of any of its obligations under the contract, including design and detailing.

Contract No.: DB11002F

By: _____ Date: _____

8' 0' 8' 16'

GRAPHIC SCALE

KEY PLAN

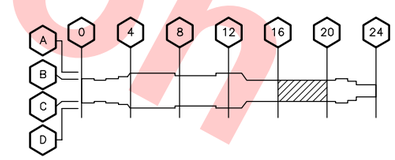

Not For Construction

REV	DATE	BY	SUB	APP	DESCRIPTION
0	20130710				READINESS FOR CONSTRUCTION

DESIGNED BY S. DEBNATH
DRAWN BY R. COLLADO
CHECKED BY E. BALLADA
IN CHARGE R. BARLAAN
DATE 20130710

LICENSED ARCHITECT SOMESH DEBNATH No. C21523 STATE OF CALIFORNIA

Skanska Shimmick Herzog
1436 California Circle
Milpitas, California 95035
A Joint Venture

Anil Verma Associates, Inc.
1970 Broadway, Suite 555 Oakland, CA 94612
Phone: (510) 835-2537 Fax: (510) 835-2339

Lockwood, Andrews & Newnam, Inc. A LEO A DALY COMPANY
T·Y·LIN INTERNATIONAL

SUBMITTED _____
APPROVED _____

VTA BART SILICON VALLEY
BART SILICON VALLEY BERRYESSA EXTENSION

LINE, TRACK, STATIONS AND SYSTEMS
DESIGN UNIT 023
MILPITAS STATION
PLATFORM LEVEL
REFLECTED CEILING PLAN
SHEET 5 OF 6

CADD FILENAME C700-S-DB-A405.dwg
SIZE D | SCALE 1/8"=1'-0"
CONTRACT NO. C700 | REV. 0
AREA CODE DB | SHEET NO. A405 | PAGE NO. 0408

JosephG Jun 26, 2013 – 1:59pm G:\Current Projects\VTA-Berryessa Extension Project\Station – Milpitas\CAD\Drawings Out\13-0710 C700 Milpitas Station – RFC Submittl\C700-S-DB-A405.dwg

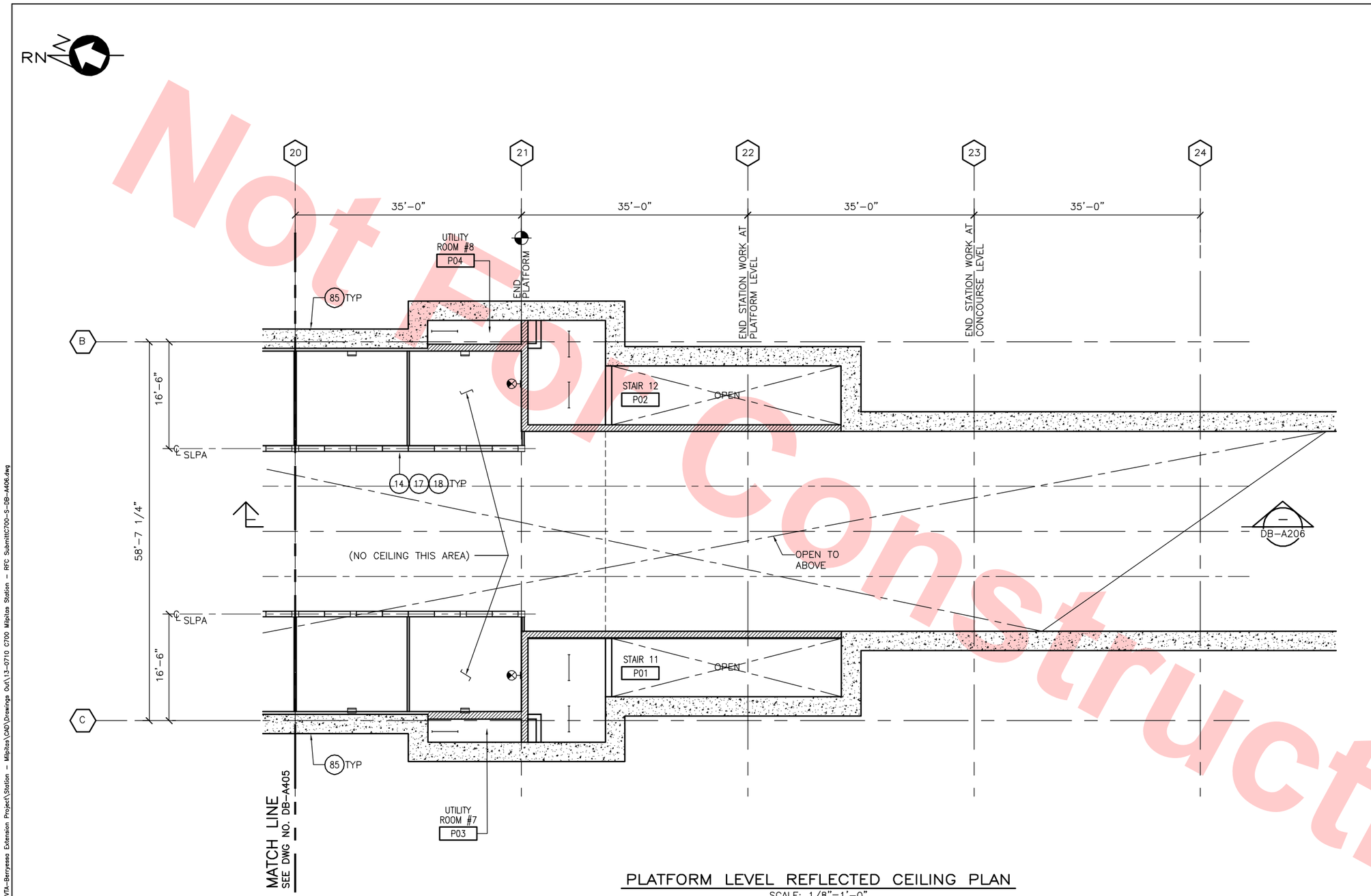

PLATFORM LEVEL REFLECTED CEILING PLAN

SCALE: 1/8"=1'-0"

DB-A400

KEY NOTES

(14) SLPA – SEE BFS SHTS AS44, AS45 AND SEE ELEC/COMM/SECURITY DRAWINGS.

(17) LINEAR FLUORESCENT DOWNLIGHT INTEGRAL WITH SLPA, SEE ELECTRICAL DRAWINGS

(18) SPEAKER INTEGRAL WITH SLPA

(85) RETAINING WALL

LEGEND

▭ WIDE METAL HALIDE WALL SCONCE MOUNTED @ 10'-0" AFF TO BOTTOM OF FIXTURE

EXIT LIGHT

Santa Clara Valley Transportation Authority

____NO EXCEPTIONS TAKEN (NET)
____MAKE CORRECTIONS NOTED (MCN)
____AMEND AND RESUBMIT (A/R)

Any action shown above is subject to the terms of the contract and does not relieve the Contractor of any of its obligations under the contract, including design and detailing.

Contract No.: DB11002F

By: _____ Date: _____

8' 0' 8' 16'

GRAPHIC SCALE

KEY PLAN

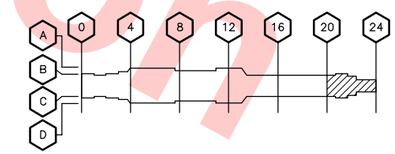

Not For Construction

REV	DATE	BY	SUB	APP	DESCRIPTION
0	20130710				READINESS FOR CONSTRUCTION

DESIGNED BY S. DEBNATH
DRAWN BY R. COLLADO
CHECKED BY E. BALLADA
IN CHARGE R. BARLAAN
DATE 20130710

LICENSED ARCHITECT SOMESH DEBNATH No. C21523 STATE OF CALIFORNIA

Skanska Shimmick Herzog
1436 California Circle
Milpitas, California 95035
A Joint Venture

Anil Verma Associates, Inc.
1970 Broadway, Suite 525, Oakland, CA 94612
Phone: (510) 835-2537 Fax: (510) 835-2339

Lockwood, Andrews & Newnam, Inc. A LEO A DALY COMPANY

T·Y·LIN INTERNATIONAL

SUBMITTED

APPROVED

VTA BART SILICON VALLEY

BART SILICON VALLEY BERRYESSA EXTENSION

LINE, TRACK, STATIONS AND SYSTEMS
DESIGN UNIT 023
MILPITAS STATION
PLATFORM LEVEL
REFLECTED CEILING PLAN
SHEET 6 OF 6

CADD FILENAME C700-S-DB-A406.dwg
SIZE D | SCALE 1/8"=1'-0"
CONTRACT NO. C700 | REV. 0
AREA CODE DB | SHEET NO. A406 | PAGE NO. 0409

JosephG Jun 26, 2013 – 2:00pm G:\Current Projects\VTA-Berryessa Extension Project\Station – Milpitas\CAD\Drawings Out\13-0710 C700 Milpitas Station – RFC Submit\C700-S-DB-A406.dwg

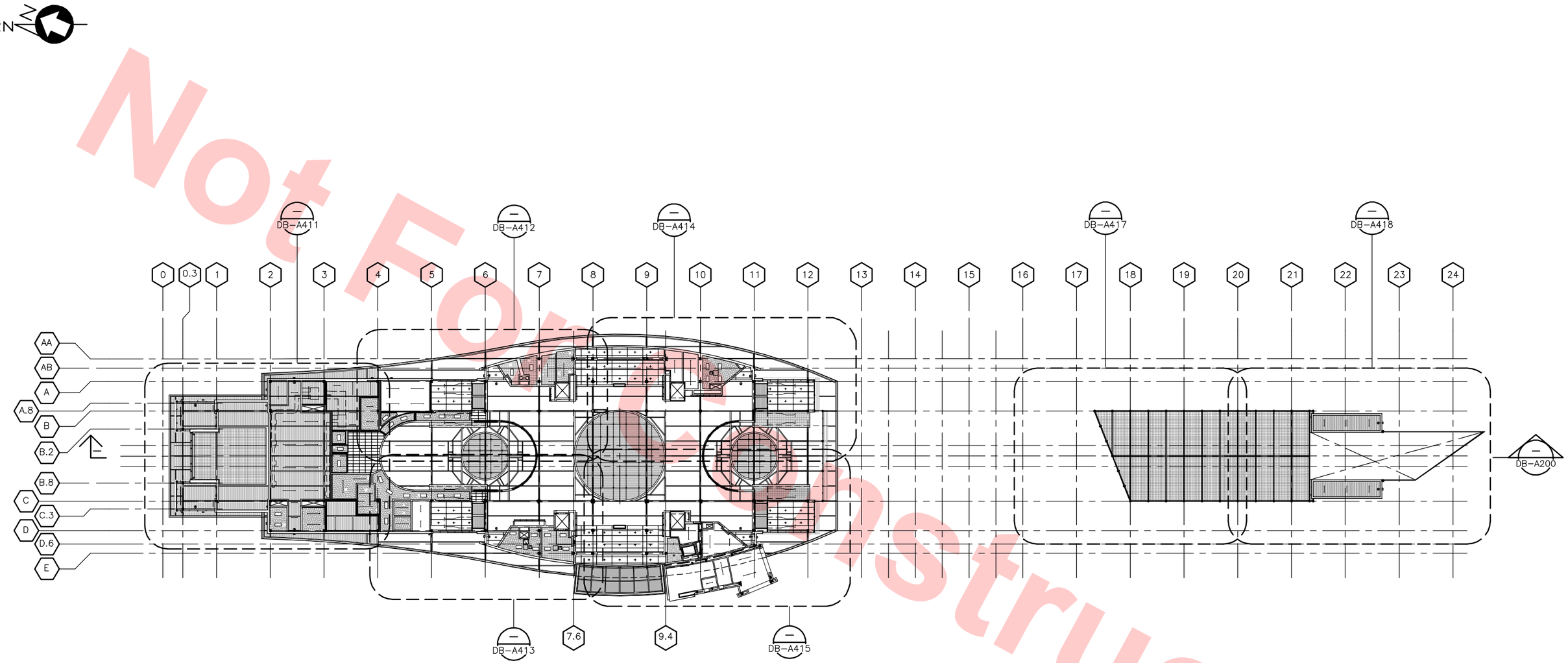

KEY PLAN – CONCOURSE LEVEL REFLECTED CEILING PLAN

SCALE: 1/32"=1'-0"

Not For Construction

Santa Clara Valley Transportation Authority

____NO EXCEPTIONS TAKEN (NET)
____MAKE CORRECTIONS NOTED (MCN)
____AMEND AND RESUBMIT (A/R)

Any action shown above is subject to the terms of the contract and does not relieve the Contractor of any of its obligations under the contract, including design and detailing.

Contract No.: DB11002F

By: _____ Date: _____

32' 0' 32' 64'

GRAPHIC SCALE

REV	DATE	BY	SUB	APP	DESCRIPTION
0	20130710				READINESS FOR CONSTRUCTION

DESIGNED BY S. DEBNATH
DRAWN BY R. COLLADO
CHECKED BY E. BALLADA
IN CHARGE R. BARLAAN
DATE 20130710

LICENSED ARCHITECT SOMESH DEBNATH No. C21523 STATE OF CALIFORNIA

Skanska Shimmick Herzog
1436 California Circle
Milpitas, California 95035
A Joint Venture

Anil Verma Associates, Inc.
1970 Broadway, Suite 555, Oakland, CA 94612
Phone: (510) 835-2537 Fax: (510) 835-2339

Lockwood, Andrews & Newnam, Inc. A LEO A DALY COMPANY

T·Y·LIN INTERNATIONAL

SUBMITTED _____ APPROVED _____

VTA BART SILICON VALLEY

BART SILICON VALLEY BERRYESSA EXTENSION

LINE, TRACK, STATIONS AND SYSTEMS
DESIGN UNIT 023
MILPITAS STATION
KEY PLAN
CONCOURSE LEVEL
REFLECTED CEILING PLAN

CADD FILENAME C700-S-DB-A410.dwg
SIZE D | SCALE 1/32"=1'-0"
CONTRACT NO. C700 | REV. 0
AREA CODE DB | SHEET NO. A410 | PAGE NO. 0410

JosephG Jun 26, 2013 – 2:01pm G:\Current Projects\VTA-Berryessa Extension Project\Station – Milpitas\CAD\Drawings Out\13-0710 C700 Milpitas Station – RFC Submitt\C700-S-DB-A410.dwg

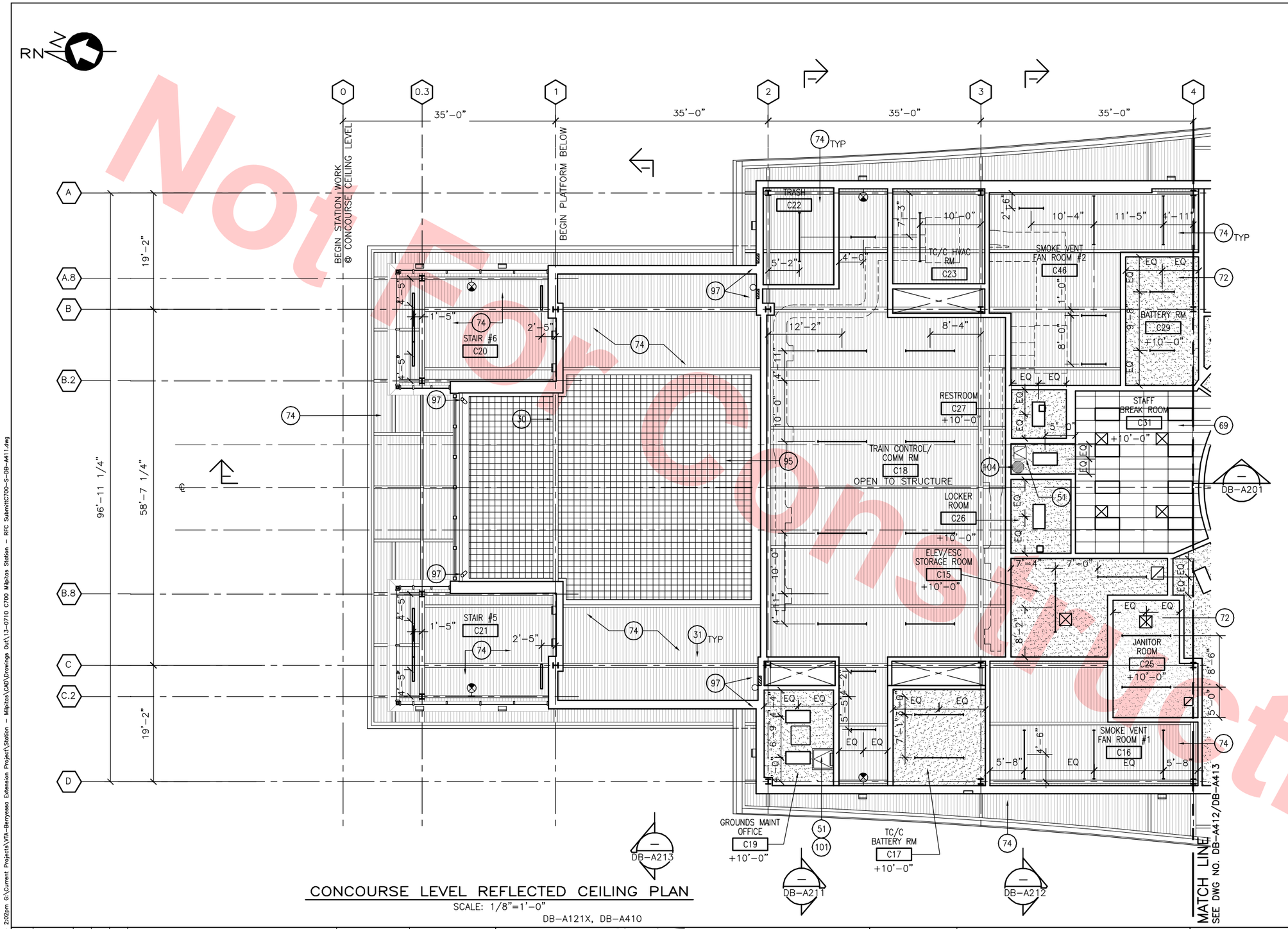

CONCOURSE LEVEL REFLECTED CEILING PLAN

SCALE: 1/8"=1'-0"

DB-A121X, DB-A410

30 STRUCTURAL BEAM
31 STRUCTURAL MEMBER
51 ACCESS HATCH
69 SUSPENDED ACOUSTICAL TILE CEILING SYSTEM
72 GYPSUM BOARD CEILING
74 EXPOSED METAL DECK
95 BIRD/SAFETY NETTING
97 DOWNSPOUT/RAINWATER LEADER
101 FIXED LADDER
104 WATER HEATER ABOVE CEILING

BIRD/SAFETY NETTING
SUSPENDED GYPSUM BOARD CEILING
LINEAR FLUORESCENT STRIP LIGHT
SURFACE MOUNTED UPLIGHT
METAL HALIDE WALL SCONCE, MOUNTED @ 10'-0" AFF TO BOTTOM OF FIXTURE
METAL HALIDE WALL SCONCE, MOUNTED @ 12'-6" AFF TO BOTTOM OF FIXTURE UON
2'x4' RECESSED LINEAR FLUORESCENT FIXTURE
EXIT LIGHT
ROOF HATCH

Santa Clara Valley Transportation Authority

____NO EXCEPTIONS TAKEN (NET)
____MAKE CORRECTIONS NOTED (MCN)
____AMEND AND RESUBMIT (A/R)

Any action shown above is subject to the terms of the contract and does not relieve the Contractor of any of its obligations under the contract, including design and detailing.

Contract No.: DB11002F

By: _____ Date: _____

8' 0' 8' 16'
GRAPHIC SCALE

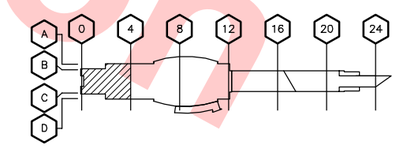

Not For Construction

REV	DATE	BY	SUB	APP	DESCRIPTION
0	20130710				READINESS FOR CONSTRUCTION

DESIGNED BY S. DEBNATH
DRAWN BY R. COLLADO
CHECKED BY E. BALLADA
IN CHARGE R. BARLAAN
DATE 20130710

LICENSED ARCHITECT SOMESH DEBNATH No. C21523 STATE OF CALIFORNIA

Skanska Shimmick Herzog
1436 California Circle Milpitas, California 95035
A Joint Venture

Anil Verma Associates, Inc.
1970 Broadway, Suite 525 Oakland, CA 94612
Phone: (510) 835-2537 Fax: (510) 835-2339
SUBMITTED

Lockwood, Andrews & Newnam, Inc. A LEO A DALY COMPANY
T·Y·LIN INTERNATIONAL
APPROVED

VTA BART SILICON VALLEY
BART SILICON VALLEY BERRYESSA EXTENSION

LINE, TRACK, STATIONS AND SYSTEMS
DESIGN UNIT 023
MILPITAS STATION
CONCOURSE LEVEL
REFLECTED CEILING PLAN
SHEET 1 OF 7

CADD FILENAME C700-S-DB-A411.dwg
SIZE D | SCALE 1/8"=1'-0"
CONTRACT NO. C700 | REV. 0
AREA CODE DB | SHEET NO. A411 | PAGE NO. 0411

JosephG Jun 26, 2013 – 2:02pm G:\Current Projects\VTA-Berryessa Extension Project\Station – Milpitas\CAD\Drawings Out\13-0710 C700 Milpitas Station – RFC Submit\C700-S-DB-A411.dwg

Santa Clara Valley Transportation Authority

____NO EXCEPTIONS TAKEN (NET)
____MAKE CORRECTIONS NOTED (MCN)
____AMEND AND RESUBMIT (A/R)

Any action shown above is subject to the terms of the contract and does not relieve the Contractor of any of its obligations under the contract, including design and detailing.

Contract No.: DB11002F

By: _____ Date: _____

Not For Construction

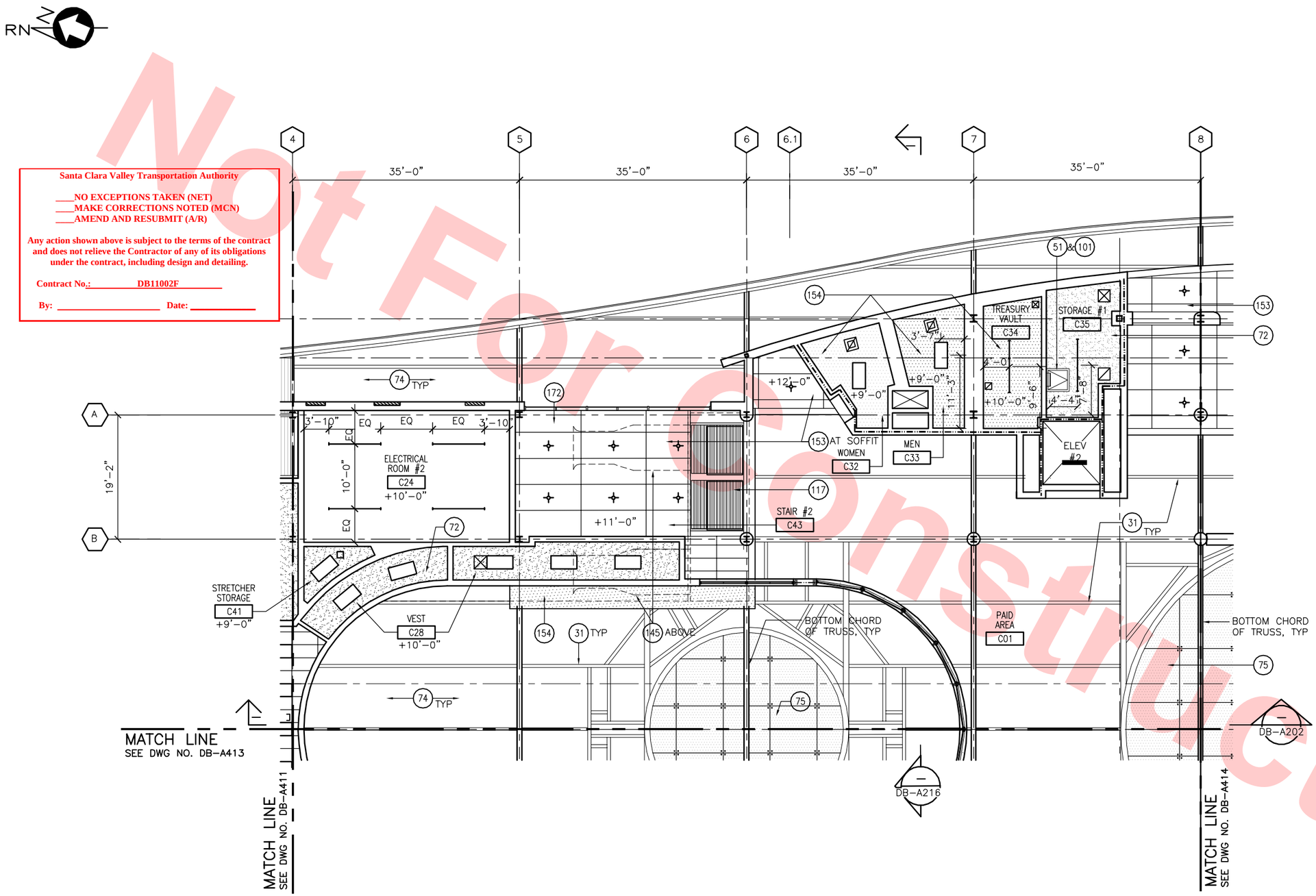

CONCOURSE LEVEL REFLECTED CEILING PLAN

SCALE: 1/8"=1'-0"

DB-122X, DB-A410

KEY NOTES

- (31) STRUCTURAL MEMBER
- (51) ACCESS HATCH
- (69) SUSPENDED ACOUSTICAL TILE CEILING SYSTEM
- (72) GYPSUM BOARD CEILING
- (74) EXPOSED METAL DECK
- (75) HORIZONTAL STRUCTURAL POINT SUPPORTED GLASS SKYLIGHT SYSTEM
- (101) FIXED LADDER
- (117) SMOKE CONTROL LOUVERS
- (145) SMOKE CONTROL FAN & DUCT
- (153) SUSPENDED DECORATIVE PANEL CEILING
- (154) CEMENT PLASTER CEILING
- (172) PERFORATED CORRUGATED STAINLESS STEEL PANEL

LEGEND

- SUSPENDED GYPSUM BOARD CEILING
- CEMENT PLASTER CEILING
- ACOUSTICAL TILE CEILING
- SUSPENDED DECORATIVE PANEL CEILING
- LINEAR FLUORESCENT STRIP LIGHT
- RECESSED METAL HALIDE
- METAL HALIDE WALL SCONCE, MOUNTED @ 10'-0" AFF TO BOTTOM OF FIXTURE
- METAL HALIDE WALL SCONCE, MOUNTED @ 12'-6" AFF TO BOTTOM OF FIXTURE UON
- 2'x4' RECESSED LINEAR FLUORESCENT FIXTURE
- CANTILEVERED FLUORESCENT WALL WASHER MOUNTED @ 10'-0" AFF TO BOTTOM OF FIXTURE,
- EXIT LIGHT
- MECHANICAL GRILLE
- ROOF HATCH

8' 0' 8' 16'

GRAPHIC SCALE

KEY PLAN

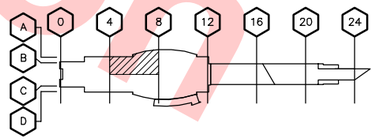

REV	DATE	BY	SUB	APP	DESCRIPTION
0	20130710				READINESS FOR CONSTRUCTION

DESIGNED BY S. DEBNATH
DRAWN BY R. COLLADO
CHECKED BY E. BALLADA
IN CHARGE R. BARLAAN
DATE 20130710

LICENSED ARCHITECT SOMESH DEBNATH No. C21523 STATE OF CALIFORNIA

Skanska Shimmick Herzog
1436 California Circle
Milpitas, California 95035
A Joint Venture

Anil Verma Associates, Inc.
1970 Broadway, Suite 525, Oakland, CA 94612
Phone: (510) 835-2537 Fax: (510) 835-2339

Lockwood, Andrews & Newnam, Inc. A CH2M HILL COMPANY

T·Y·LIN INTERNATIONAL

SUBMITTED _____ APPROVED _____

VTA BART SILICON VALLEY

BART SILICON VALLEY BERRYESSA EXTENSION

LINE, TRACK, STATIONS AND SYSTEMS
DESIGN UNIT 023
MILPITAS STATION
CONCOURSE LEVEL
REFLECTED CEILING PLAN
SHEET 2 OF 7

CADD FILENAME C700-S-DB-A412.dwg
SIZE D | SCALE 1/8"=1'-0"
CONTRACT NO. C700 | REV. 0
AREA CODE DB | SHEET NO. A412 | PAGE NO. 0412

JosephG Jun 26, 2013 – 2:02pm G:\Current Projects\VTA-Berryessa Extension Project\Station – Milpitas\CAD\Drawings Out\13-0710 C700 Milpitas Station – RFC Submit\C700-S-DB-A412.dwg

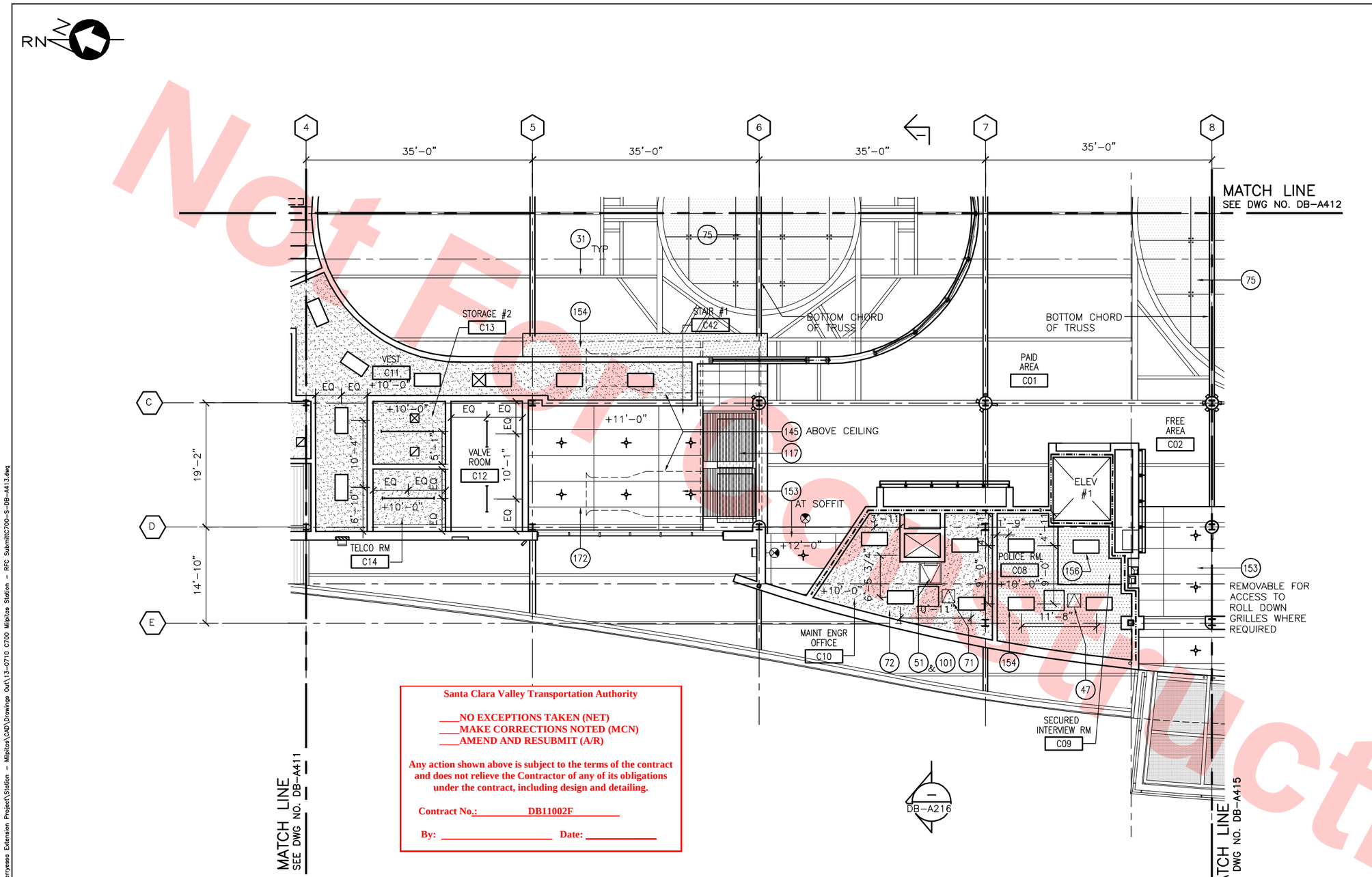

Santa Clara Valley Transportation Authority

____NO EXCEPTIONS TAKEN (NET)
____MAKE CORRECTIONS NOTED (MCN)
____AMEND AND RESUBMIT (A/R)

Any action shown above is subject to the terms of the contract and does not relieve the Contractor of any of its obligations under the contract, including design and detailing.

Contract No.: DB11002F

By: _____ Date: _____

CONCOURSE LEVEL REFLECTED CEILING PLAN

SCALE: 1/8"=1'-0"

DB-A123X, DB-A410

KEY NOTES

- (31) STRUCTURAL MEMBER
- (51) ACCESS HATCH
- (71) CEILING HATCH
- (72) GYPSUM BOARD CEILING
- (74) EXPOSED METAL DECK
- (75) HORIZONTAL STRUCTURAL POINT SUPPORTED GLASS SKYLIGHT SYSTEM
- (101) FIXED LADDER
- (117) SMOKE CONTROL LOUVERS
- (145) SMOKE CONTROL FAN & DUCT
- (153) SUSPENDED DECORATIVE PANEL CEILING
- (154) CEMENT PLASTER CEILING
- (156) CORRECTIONAL GRADE LIGHT FIXTURE
- (172) PERFORATED CORRUGATED STAINLESS STEEL PANEL

LEGEND

- SUSPENDED GYPSUM BOARD CEILING
- CEMENT PLASTER CEILING
- SUSPENDED DECORATIVE PANEL CEILING
- LINEAR FLUORESCENT STRIP LIGHT
- RECESSED METAL HALIDE
- METAL HALIDE WALL SCONCE, MOUNTED @ 10'-0" AFF TO BOTTOM OF FIXTURE
- METAL HALIDE WALL SCONCE, MOUNTED @ 12'-6" AFF TO BOTTOM OF FIXTURE UON
- 2'x4' RECESSED LINEAR FLUORESCENT FIXTURE
- CANTILEVERED FLUORESCENT WALL WASHER MOUNTED @ 10'-0" AFF TO BOTTOM OF FIXTURE
- EXIT LIGHT
- MECHANICAL GRILLE
- ROOF HATCH
- MECHANICAL UNIT ABOVE CEILING

8' 0' 8' 16'

GRAPHIC SCALE

KEY PLAN

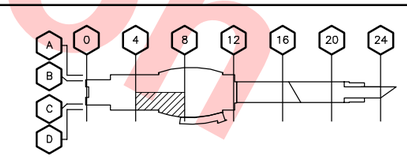

REV	DATE	BY	SUB	APP	DESCRIPTION
0	20130710				READINESS FOR CONSTRUCTION

DESIGNED BY S. DEBNATH
DRAWN BY R. COLLADO
CHECKED BY E. BALLADA
IN CHARGE R. BARLAAN
DATE 20130710

LICENSED ARCHITECT SOMESH DEBNATH No. C21523 STATE OF CALIFORNIA

Skanska Shimmick Herzog
1436 California Circle
Milpitas, California 95035
A Joint Venture

Anil Verma Associates, Inc.
1970 Broadway, Suite 525 Oakland, CA 94612
Phone: (510) 835-2537 Fax: (510) 835-2339

Lockwood, Andrews & Newnam, Inc. A LEO A DALY COMPANY

T·Y·LIN INTERNATIONAL

SUBMITTED _____ APPROVED _____

VTA BART SILICON VALLEY

BART SILICON VALLEY BERRYESSA EXTENSION

LINE, TRACK, STATIONS AND SYSTEMS
DESIGN UNIT 023
MILPITAS STATION
CONCOURSE LEVEL
REFLECTED CEILING PLAN
SHEET 3 OF 7

CADD FILENAME C700-S-DB-A413.dwg
SIZE D | SCALE 1/8"=1'-0"
CONTRACT NO. C700 | REV. 0
AREA CODE DB | SHEET NO. A413 | PAGE NO. 0413

Not For Construction

JosephG Jun 26, 2013 – 2:03pm G:\Current Projects\VTA-Berryessa Extension Project\Station – Milpitas\CAD\Drawings Out\13-0710 C700 Milpitas Station – RFC Submit\C700-S-DB-A413.dwg

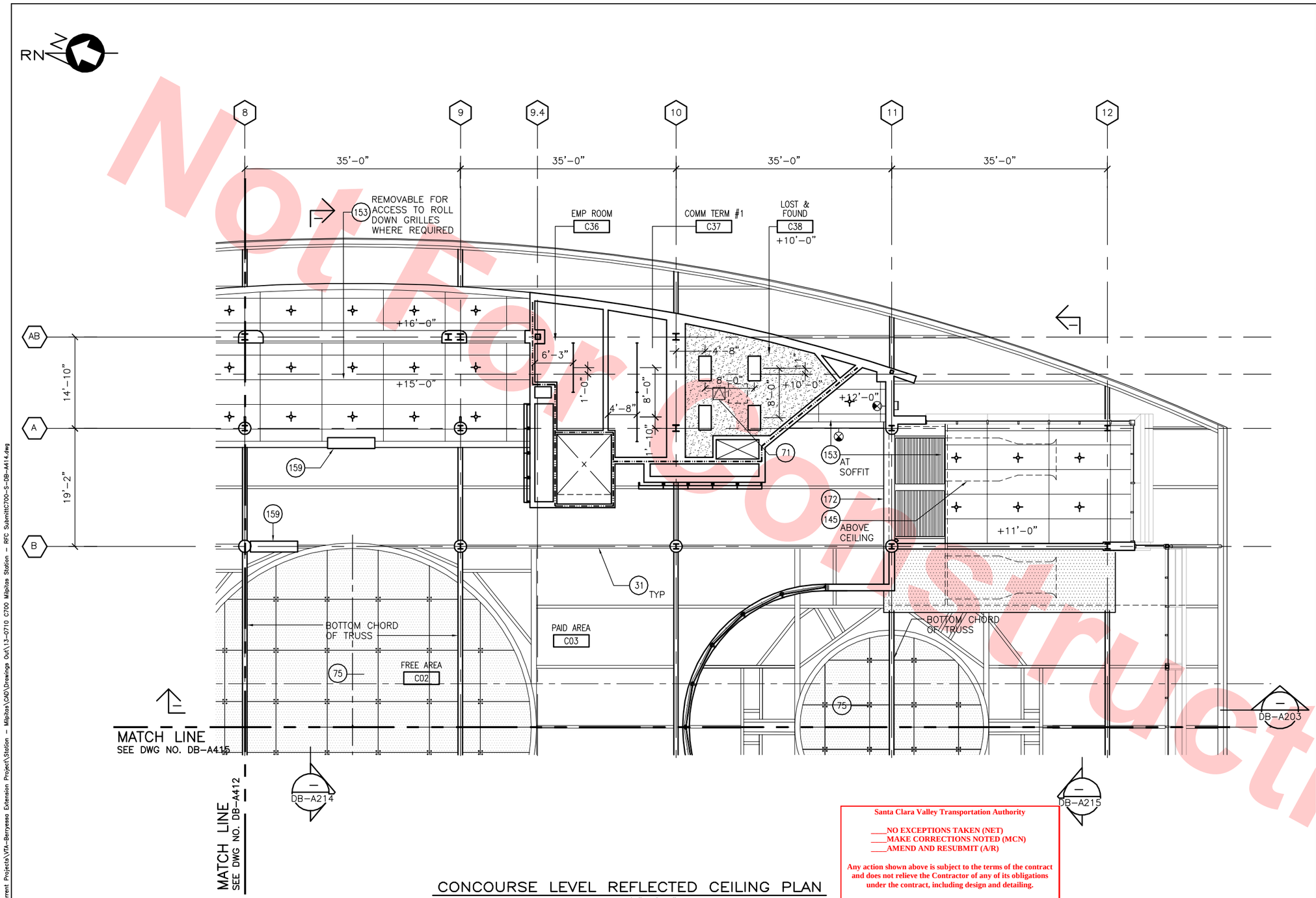

CONCOURSE LEVEL REFLECTED CEILING PLAN

SCALE: 1/8"=1'-0"

DB-A410

Santa Clara Valley Transportation Authority

____NO EXCEPTIONS TAKEN (NET)
____MAKE CORRECTIONS NOTED (MCN)
____AMEND AND RESUBMIT (A/R)

Any action shown above is subject to the terms of the contract and does not relieve the Contractor of any of its obligations under the contract, including design and detailing.

Contract No.: DB11002F

By: _____ Date: _____

KEY NOTES

- (31) STRUCTURAL MEMBER
- (71) CEILING ACCESS
- (72) GYPSUM BOARD CEILING
- (74) EXPOSED METAL DECK
- (75) HORIZONTAL STRUCTURAL POINT SUPPORTED GLASS SKYLIGHT SYSTEM
- (145) SMOKE CONTROL FAN AND DUCT
- (153) SUSPENDED DECORATIVE PANEL CEILING
- (154) CEMENT PLASTER CEILING
- (159) VARIABLE MESSAGE SIGN (TRAIN INFORMATION MONITOR)
- (172) PERFORATED CORRUGATED STAINLESS STEEL PANEL

LEGEND

- SUSPENDED GYPSUM BOARD CEILING
- CEMENT PLASTER CEILING
- SUSPENDED DECORATIVE PANEL CEILING
- LINEAR FLUORESCENT STRIP LIGHT
- RECESSED METAL HALIDE
- SURFACE MOUNTED METAL HALIDE CYLINDER
- METAL HALIDE WALL SCONCE, MOUNTED @ 12'-6" AFF TO BOTTOM OF FIXTURE UON
- 2'x4' RECESSED LINEAR FLUORESCENT FIXTURE
- CANTILEVERED FLUORESCENT WALL WASHER MOUNTED @ 10'-0" AFF TO BOTTOM OF FIXTURE
- EXIT LIGHT
- MECHANICAL GRILLE
- ROOF HATCH
- MECHANICAL UNIT ABOVE CEILING

8' 0' 8' 16'

GRAPHIC SCALE

KEY PLAN

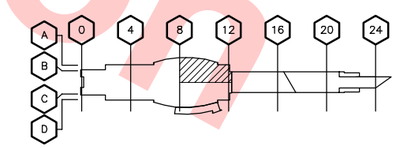

Not For Construction

REV	DATE	BY	SUB	APP	DESCRIPTION
0	20130710				READINESS FOR CONSTRUCTION

DESIGNED BY S. DEBNATH
DRAWN BY R. COLLADO
CHECKED BY E. BALLADA
IN CHARGE R. BARLAAN
DATE 20130710

LICENSED ARCHITECT SOMESH DEBNATH No. C21523 STATE OF CALIFORNIA

Skanska Shimmick Herzog
1436 California Circle
Milpitas, California 95035
A Joint Venture

Anil Verma Associates, Inc.
1970 Broadway, Suite 525, Oakland, CA 94612
Phone: (510) 835-2537 Fax: (510) 835-2339
SUBMITTED

Lockwood, Andrews & Newnam, Inc. A LEO A DALY COMPANY
T·Y·LIN INTERNATIONAL
APPROVED

VTA BART SILICON VALLEY
BART SILICON VALLEY BERRYESSA EXTENSION

LINE, TRACK, STATIONS AND SYSTEMS
DESIGN UNIT 023
MILPITAS STATION
CONCOURSE LEVEL
REFLECTED CEILING PLAN
SHEET 4 OF 7

CADD FILENAME C700-S-DB-A414.dwg
SIZE D | SCALE 1/8"=1'-0"
CONTRACT NO. C700 | REV. 0
AREA CODE DB | SHEET NO. A414 | PAGE NO. 0414

JosephG Jun 26, 2013 – 2:03pm G:\Current Projects\VTA-Berryessa Extension Project\Station – Milpitas\CAD\Drawings Out\13-0710 C700 Milpitas Station – RFC Submit\C700-S-DB-A414.dwg

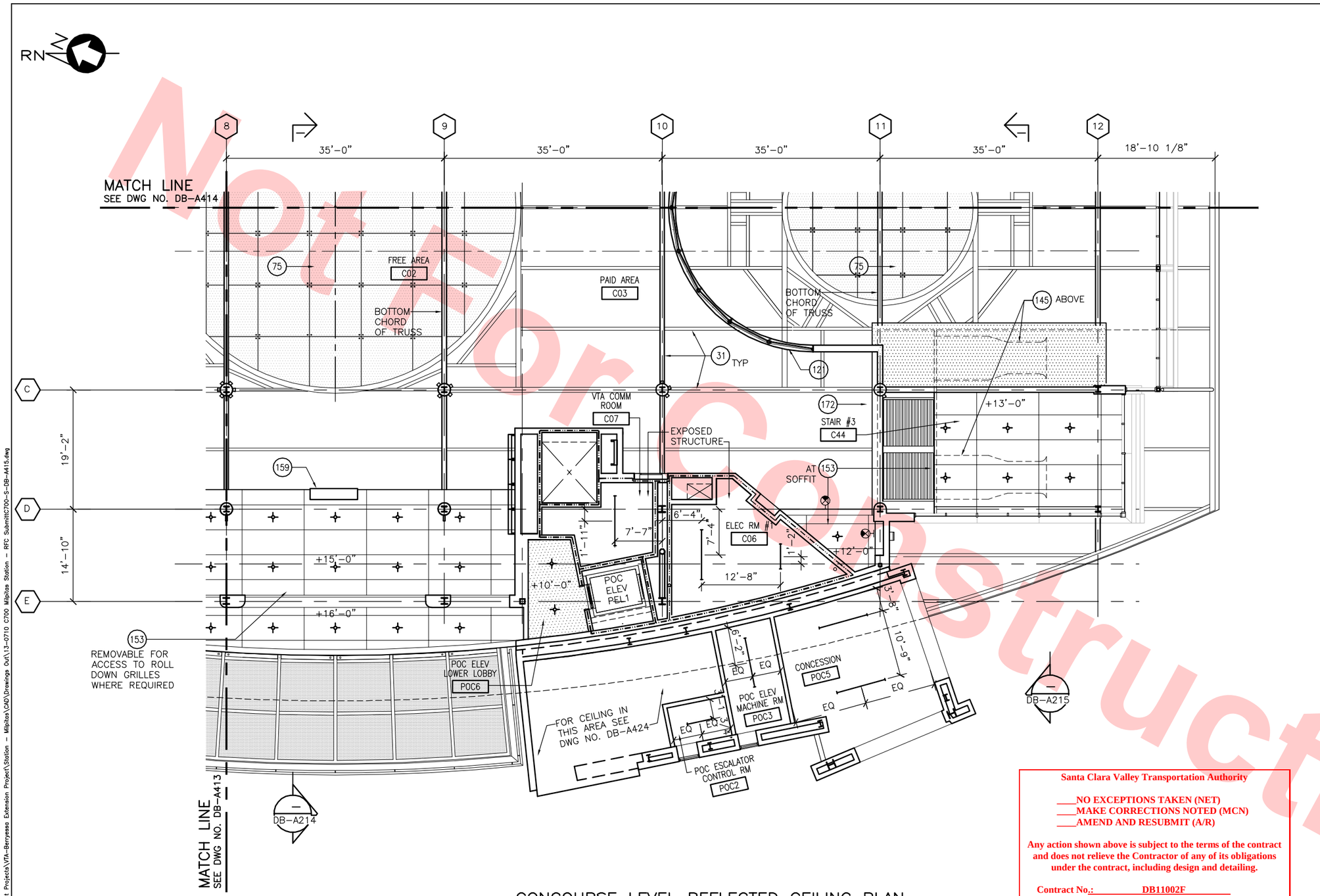

CONCOURSE LEVEL REFLECTED CEILING PLAN

SCALE: 1/8"=1'-0"

DB-A410

KEY NOTES

- (31) STRUCTURAL MEMBER
- (72) EXPOSED METAL DECK
- (75) HORIZONTAL STRUCTURAL POINT SUPPORTED GLASS SKYLIGHT SYSTEM
- (121) FRAMELESS GLASS WALL SYSTEM TYPE 2
- (145) SMOKE CONTROL FAN AND DUCT ABOVE
- (153) SUSPENDED DECORATIVE PANEL CEILING
- (154) CEMENT PLASTER CEILING
- (159) VARIABLE MESSAGE SIGN (TRAIN INFORMATION MONITOR)
- (172) PERFORATED CORRUGATED STAINLESS STEEL PANEL

LEGEND

- SUSPENDED GYPSUM BOARD CEILING
- CEMENT PLASTER CEILING
- SUSPENDED DECORATIVE PANEL CEILING
- LINEAR FLUORESCENT STRIP LIGHT
- RECESSED METAL HALIDE
- SURFACE MOUNTED METAL HALIDE CYLINDER
- METAL HALIDE WALL SCONCE, MOUNTED @ 12'-6" AFF TO BOTTOM OF FIXTURE UON
- 2'x4' RECESSED LINEAR FLUORESCENT FIXTURE
- CANTILEVERED FLUORESCENT WALL WASHER TYPE M19, MOUNTED @ 10'-0" AFF TO BOTTOM OF FIXTURE, SEE LIGHTING DESIGN BASIS
- EXIT LIGHT
- MECHANICAL GRILLE

8' 0' 8' 16'

GRAPHIC SCALE

KEY PLAN

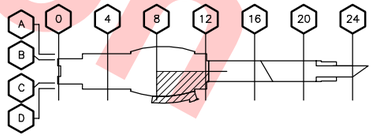

Santa Clara Valley Transportation Authority

____NO EXCEPTIONS TAKEN (NET)
____MAKE CORRECTIONS NOTED (MCN)
____AMEND AND RESUBMIT (A/R)

Any action shown above is subject to the terms of the contract and does not relieve the Contractor of any of its obligations under the contract, including design and detailing.

Contract No.: DB11002F

By: _____ **Date:** _____

Not For Construction

REV	DATE	BY	SUB	APP	DESCRIPTION
0	20130710				READINESS FOR CONSTRUCTION

DESIGNED BY S. DEBNATH
DRAWN BY R. COLLADO
CHECKED BY E. BALLADA
IN CHARGE R. BARLAAN
DATE 20130710

LICENSED ARCHITECT SAMESH DEBNATH No. C21523 STATE OF CALIFORNIA

Skanska Shimmick Herzog
1436 California Circle
Milpitas, California 95035
A Joint Venture

Anil Verma Associates, Inc.
1970 Broadway, Suite 535 Oakland, CA 94612
Phone: (510) 835-2537 Fax: (510) 535-2339

Lockwood, Andrews & Newnam, Inc. A LAN & BALY COMPANY

T·Y·LIN INTERNATIONAL

SUBMITTED _____

APPROVED _____

VTA BART SILICON VALLEY

BART SILICON VALLEY BERRYESSA EXTENSION

LINE, TRACK, STATIONS AND SYSTEMS
DESIGN UNIT 023
MILPITAS STATION
CONCOURSE LEVEL
REFLECTED CEILING PLAN
SHEET 5 OF 7

CADD FILENAME C700-S-DB-A415.dwg
SIZE D | SCALE 1/8"=1'-0"
CONTRACT NO. C700 | REV. 0
AREA CODE DB | SHEET NO. A415 | PAGE NO. 0415

JosephG Jun 26, 2013 - 2:04pm G:\Current Projects\VTA-Berryessa Extension Project\Station - Milpitas\CAD\Drawings Out\13-0710 C700 Milpitas Station - RFC Submittl\C700-S-DB-A415.dwg

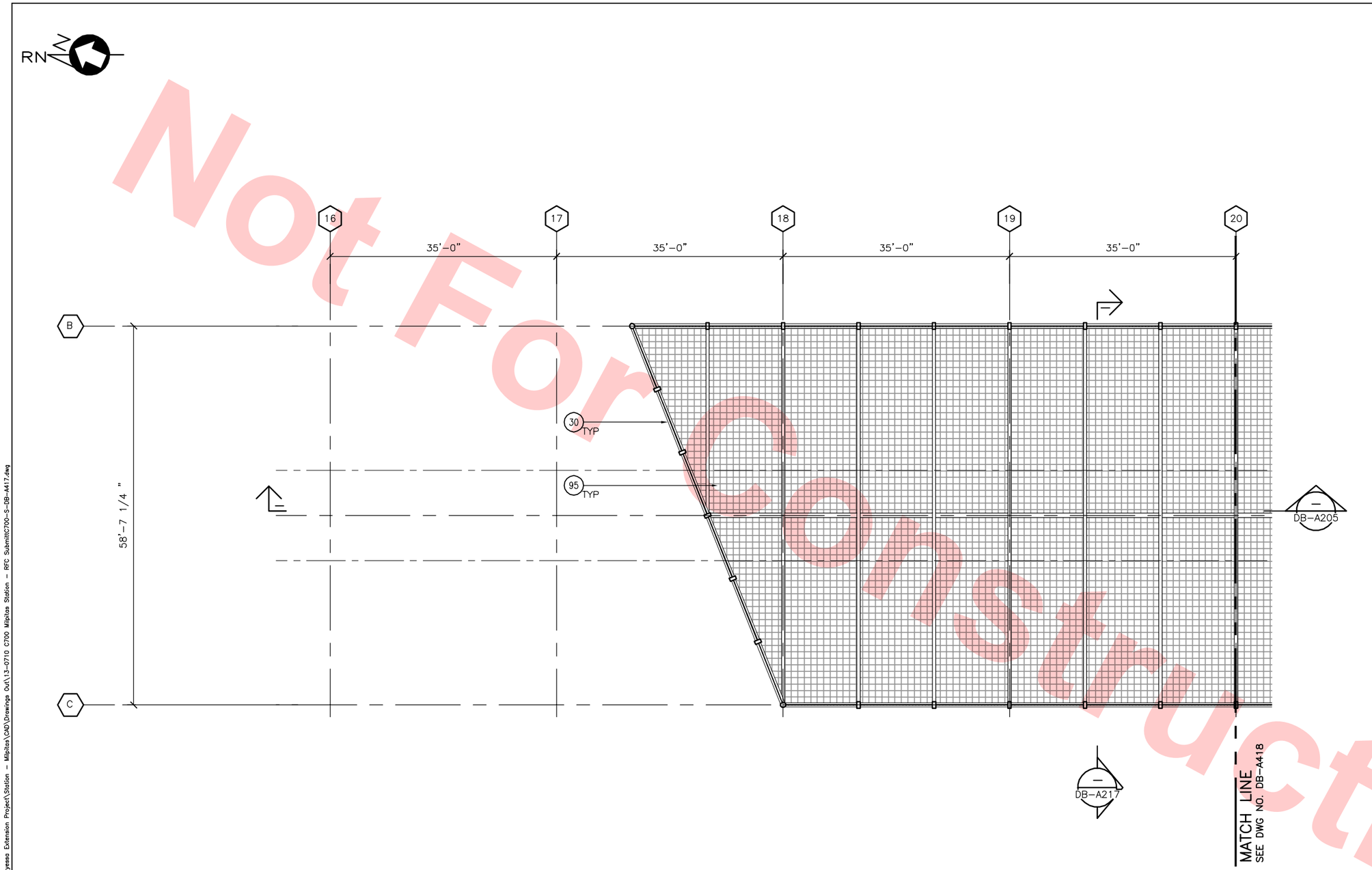

CONCOURSE LEVEL REFLECTED CEILING PLAN

SCALE: 1/8"=1'-0"

DB-A410

KEY NOTES

30 STRUCTURAL BEAM

95 BIRD/SAFETY NETTING

LEGEND

BIRD/SAFETY NETTING

Santa Clara Valley Transportation Authority

____NO EXCEPTIONS TAKEN (NET)
____MAKE CORRECTIONS NOTED (MCN)
____AMEND AND RESUBMIT (A/R)

Any action shown above is subject to the terms of the contract and does not relieve the Contractor of any of its obligations under the contract, including design and detailing.

Contract No.: DB11002F

By: _____ Date: _____

8' 0' 8' 16'

GRAPHIC SCALE

KEY PLAN

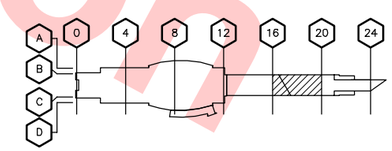

Not For Construction

REV	DATE	BY	SUB	APP	DESCRIPTION
0	20130710				READINESS FOR CONSTRUCTION

DESIGNED BY S. DEBNATH
DRAWN BY R. COLLADO
CHECKED BY E. BALLADA
IN CHARGE R. BARLAAN
DATE 20130710

LICENSED ARCHITECT SOMESH DEBNATH No. C21523 STATE OF CALIFORNIA

Skanska Shimmick Herzog
1436 California Circle
Milpitas, California 95035
A Joint Venture

Anil Verma Associates, Inc.
1970 Broadway, Suite 525, Oakland, CA 94612
Phone: (510) 835-2537 Fax: (510) 835-2339

Lockwood, Andrews & Newnam, Inc. A LEO A DALY COMPANY

T·Y·LIN INTERNATIONAL

SUBMITTED

APPROVED

VTA BART SILICON VALLEY

BART SILICON VALLEY BERRYESSA EXTENSION

LINE, TRACK, STATIONS AND SYSTEMS
DESIGN UNIT 023
MILPITAS STATION
CONCOURSE LEVEL
REFLECTED CEILING PLAN
SHEET 6 OF 7

CADD FILENAME C700-S-DB-A417.dwg
SIZE D | SCALE 1/8"=1'-0"
CONTRACT NO. C700 | REV. 0
AREA CODE DB | SHEET NO. A417 | PAGE NO. 0416

JosephG Jun 26, 2013 - 2:05pm G:\Current Projects\VTA-Berryessa Extension Project\Station - Milpitas\CAD\Drawings Out\13-0710 C700 Milpitas Station - RFC Submit\C700-S-DB-A417.dwg

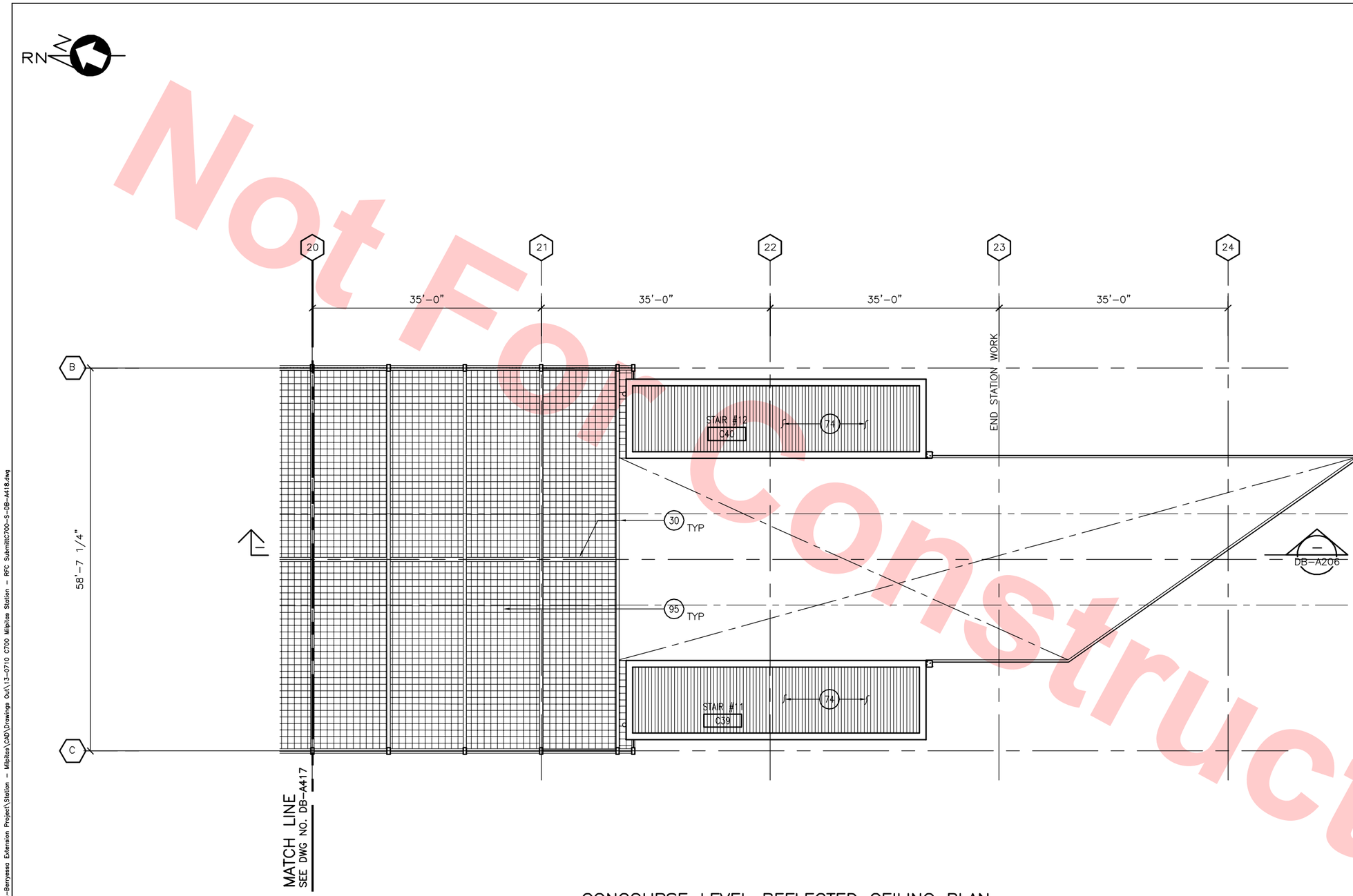

CONCOURSE LEVEL REFLECTED CEILING PLAN

SCALE: 1/8"=1'-0"

DB-A410

KEY NOTES

30 STRUCTURAL BEAM

74 EXPOSED METAL DECK

95 BIRD/SAFETY NETTING

LEGEND

BIRD/SAFETY NETTING

LINEAR FLUORESCENT STRIP LIGHT

METAL HALIDE WALL SCONCE, MOUNTED @ 12'-6" AFF TO BOTTOM OF FIXTURE UON

EXIT LIGHT

Santa Clara Valley Transportation Authority

____NO EXCEPTIONS TAKEN (NET)
____MAKE CORRECTIONS NOTED (MCN)
____AMEND AND RESUBMIT (A/R)

Any action shown above is subject to the terms of the contract and does not relieve the Contractor of any of its obligations under the contract, including design and detailing.

Contract No.: DB11002F

By: _____ Date: _____

8' 0' 8' 16'

GRAPHIC SCALE

KEY PLAN

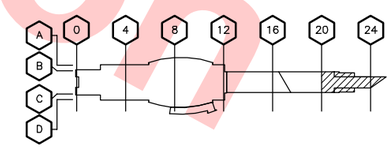

Not For Construction

REV	DATE	BY	SUB	APP	DESCRIPTION
0	20130710				READINESS FOR CONSTRUCTION

DESIGNED BY S. DEBNATH
DRAWN BY R. COLLADO
CHECKED BY E. BALLADA
IN CHARGE R. BARLAAN
DATE 20130710

LICENSED ARCHITECT SURESH DEBNATH No. C21523 STATE OF CALIFORNIA

Skanska Shimmick Herzog
1436 California Circle
Milpitas, California 95035
A Joint Venture

Anil Verma Associates, Inc.
1970 Broadway, Suite 525, Oakland, CA 94612
Phone: (510) 835-2537 Fax: (510) 835-2339

SUBMITTED

Lockwood, Andrews & Newnam, Inc. A LEO A DALY COMPANY
T·Y·LIN INTERNATIONAL

APPROVED

VTA BART SILICON VALLEY

BART SILICON VALLEY BERRYESSA EXTENSION

LINE, TRACK, STATIONS AND SYSTEMS
DESIGN UNIT 023
MILPITAS STATION
CONCOURSE LEVEL
REFLECTED CEILING PLAN
SHEET 7 OF 7

CADD FILENAME C700-S-DB-A418.dwg
SIZE D
SCALE 1/8"=1'-0"
CONTRACT NO. C700
REV. 0
AREA CODE DB
SHEET NO. A418
PAGE NO. 0417

JosephG Jun 26, 2013 - 2:06pm G:\Current Projects\VTA-Berryessa Extension Project\Station - Milpitas\CAD\Drawings Out\13-0710 C700 Milpitas Station - RFC Submit\C700-S-DB-A418.dwg

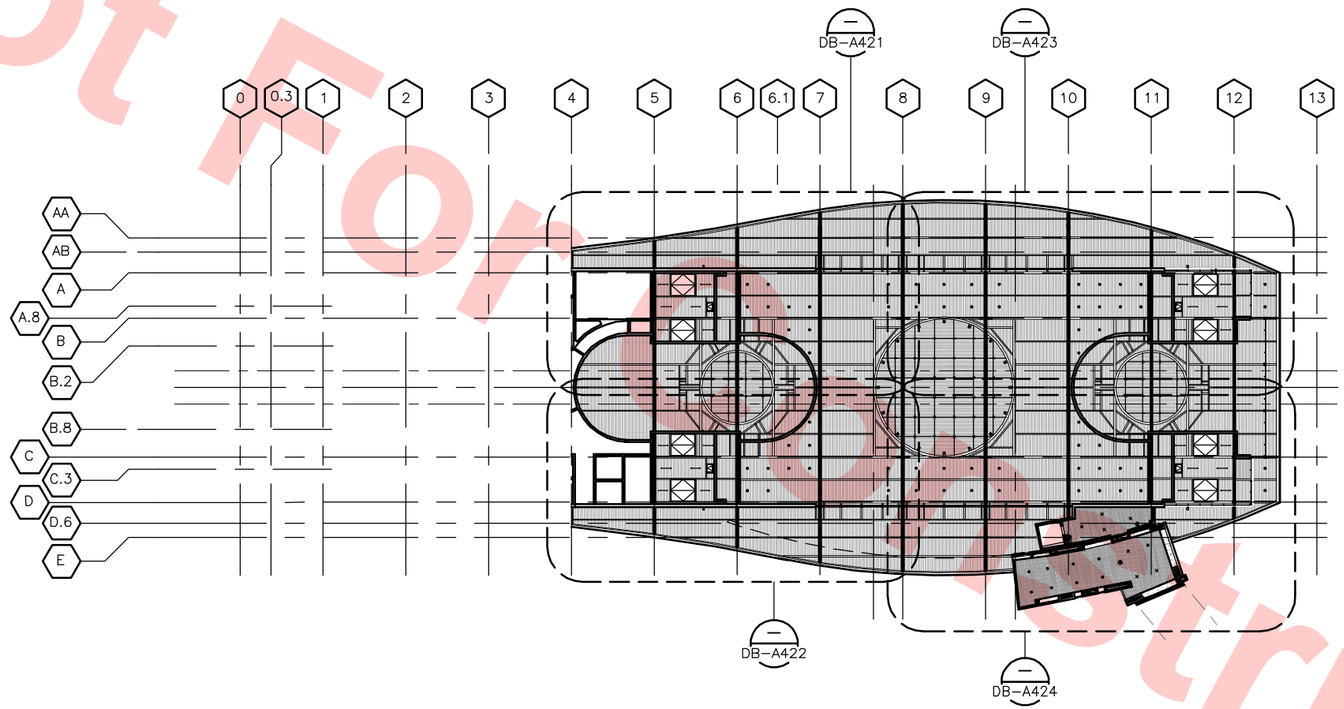

KEY PLAN – CONCOURSE LEVEL HIGH CEILING – REFLECTED CEILING PLAN

SCALE: 1/32"=1'–0"

Santa Clara Valley Transportation Authority

____NO EXCEPTIONS TAKEN (NET)
____MAKE CORRECTIONS NOTED (MCN)
____AMEND AND RESUBMIT (A/R)

Any action shown above is subject to the terms of the contract and does not relieve the Contractor of any of its obligations under the contract, including design and detailing.

Contract No.: DB11002F

By: _____ **Date:** _____

32' 0' 32' 64'

GRAPHIC SCALE

Not For Construction

REV	DATE	BY	SUB	APP	DESCRIPTION
0	20130710				READINESS FOR CONSTRUCTION

DESIGNED BY S. DEBNATH
DRAWN BY R. COLLADO
CHECKED BY E. BALLADA
IN CHARGE R. BARLAAN
DATE 20130710

LICENSED ARCHITECT SURESH DEBNATH No. C21523 STATE OF CALIFORNIA

Skanska Shimmick Herzog
1436 California Circle
Milpitas, California 95035
A Joint Venture

Anil Verma Associates, Inc.
1970 Broadway, Suite 535, Oakland, CA 94612
Phone: (510) 835-2537 Fax: (510) 835-2339
SUBMITTED

Lockwood, Andrews & Newnam, Inc. A LEO A DALY COMPANY
T·Y·LIN INTERNATIONAL
APPROVED

VTA BART SILICON VALLEY
BART SILICON VALLEY BERRYESSA EXTENSION

LINE, TRACK, STATIONS AND SYSTEMS
DESIGN UNIT 023
MILPITAS STATION
KEY PLAN
CONCOURSE LEVEL HIGH CEILING
REFLECTED CEILING PLAN

CADD FILENAME C700–S–DB–A420.dwg
SIZE D | SCALE 1/32"=1'–0"
CONTRACT NO. C700 | REV. 0
AREA CODE DB | SHEET NO. A420 | PAGE NO. 0418

JosephG Jun 26, 2013 – 2:06pm G:\Current Projects\VTA–Berryessa Extension Project\Station – Milpitas\CAD\Drawings Out\13–0710 C700 Milpitas Station – RFC Submittal\C700–S–DB–A420.dwg

Santa Clara Valley Transportation Authority

____NO EXCEPTIONS TAKEN (NET)
____MAKE CORRECTIONS NOTED (MCN)
____AMEND AND RESUBMIT (A/R)

Any action shown above is subject to the terms of the contract and does not relieve the Contractor of any of its obligations under the contract, including design and detailing.

Contract No.: DB11002F

By: _____ Date: _____

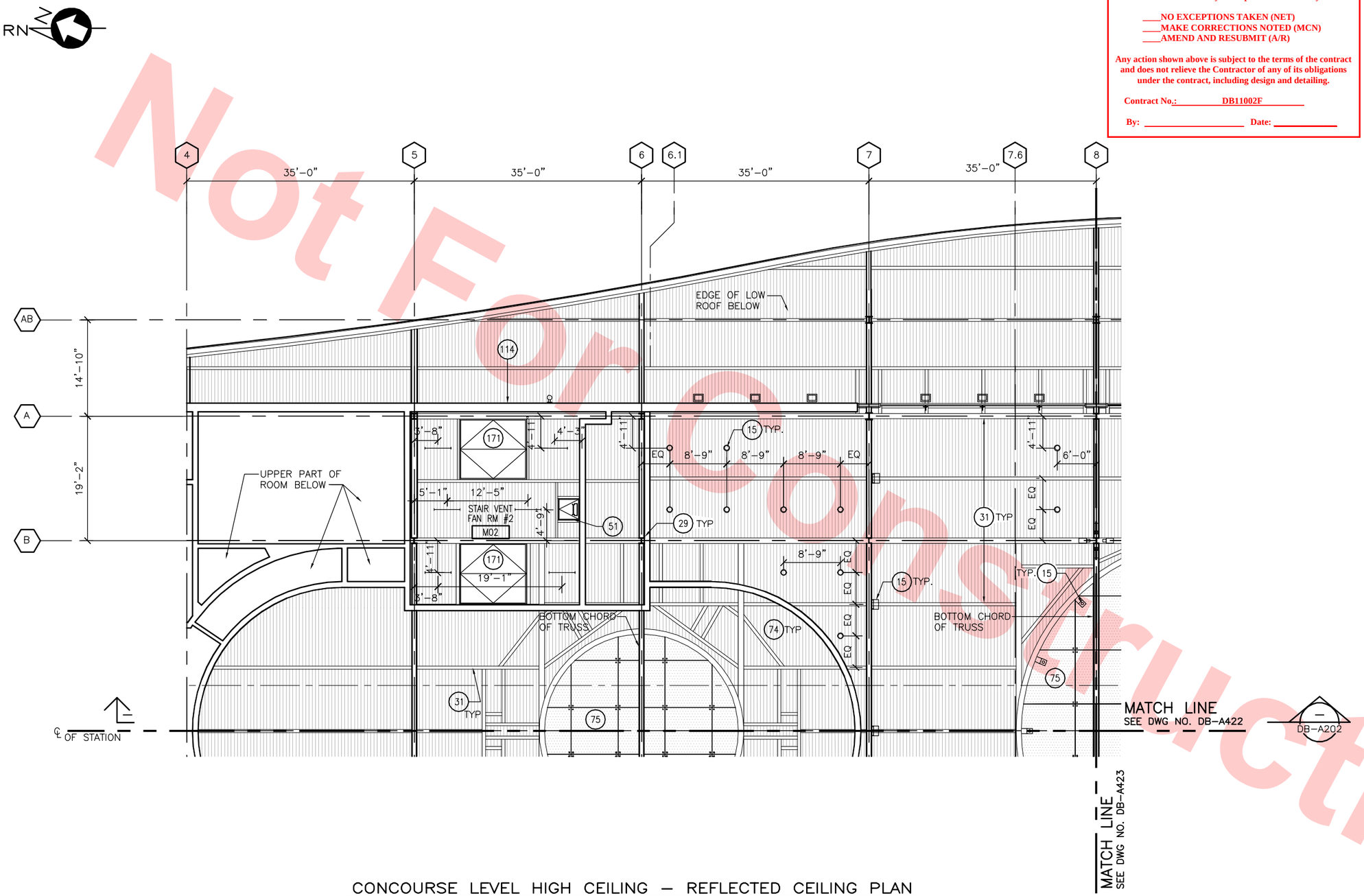

CONCOURSE LEVEL HIGH CEILING – REFLECTED CEILING PLAN

SCALE: 1/8"=1'-0"

DB-A420

KEY NOTES

- (15) LIGHT FIXTURE
- (29) STRUCTURAL COLUMN
- (31) STRUCTURAL MEMBER
- (51) ACCESS HATCH
- (60) FRAMELESS GLASS WALL SYSTEM TYPE 1
- (62) LOUVER
- (74) EXPOSED METAL DECK
- (75) HORIZONTAL STRUCTURAL POINT SUPPORTED GLASS SKYLIGHT SYSTEM
- (114) METAL WALL PANEL WP-2, SEE DWG NO. DB-A701
- (171) EQUIPMENT ACCESS ROOF SCUTTLE

LEGEND

- LINEAR FLUORESCENT STRIP LIGHT
- HIGH SURFACE MOUNTED METAL HALIDE CYLINDER
- ROOF MOUNTED UPLIGHT
- METAL HALIDE DIRECT/INDIRECT WALL SCONCE
- METAL HALIDE UPLIGHT, CANTILEVERED 5" FROM BOTTOM CHORD OF TRUSS FOR MOUNTING, SEE DETAIL 4/DB-A614
- METAL HALIDE ACCENT LIGHT, CANTILEVERED 6" FROM FACE OF WALL FOR MOUNTING, SEE DETAIL 3/DB-A614
- METAL HALIDE UPLIGHT, MOUNTED TO COLUMN @ 20'-0" AFF TO BOTTOM OF FIXTURE
- ROOF HATCH

8' 0' 8' 16'

GRAPHIC SCALE

KEY PLAN

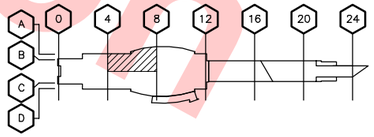

Not For Construction

REV	DATE	BY	SUB	APP	DESCRIPTION
0	20130710				READINESS FOR CONSTRUCTION

DESIGNED BY S. DEBNATH
DRAWN BY R. COLLADO
CHECKED BY E. BALLADA
IN CHARGE R. BARLAAN
DATE 20130710

LICENSED ARCHITECT SANJEEV DEBNATH No. C21523 STATE OF CALIFORNIA

Skanska Shimmick Herzog
1436 California Circle
Milpitas, California 95035
A Joint Venture

Anil Verma Associates, Inc.
1970 Broadway, Suite 525 Oakland, CA 94612
Phone: (510) 835-2537 Fax: (510) 835-2339

SUBMITTED

Lockwood, Andrews & Newnam, Inc. A CH2M HILL COMPANY
T·Y·LIN INTERNATIONAL

APPROVED

VTA BART SILICON VALLEY

BART SILICON VALLEY BERRYESSA EXTENSION

LINE, TRACK, STATIONS AND SYSTEMS
DESIGN UNIT 023
MILPITAS STATION
CONCOURSE LEVEL HIGH CEILING
REFLECTED CEILING PLAN
SHEET 1 OF 4

CADD FILENAME C700-S-DB-A421.dwg
SIZE D | SCALE 1/8"=1'-0"
CONTRACT NO. C700 | REV. 0
AREA CODE DB | SHEET NO. A421 | PAGE NO. 0419

JosephG Jun 26, 2013 – 2:07pm G:\Current Projects\VTA-Berryessa Extension Project\Station – Milpitas\CAD\Drawings Out\13-0710 C700 Milpitas Station – RFC Submittal\C700-S-DB-A421.dwg

Santa Clara Valley Transportation Authority

____NO EXCEPTIONS TAKEN (NET)
____MAKE CORRECTIONS NOTED (MCN)
____AMEND AND RESUBMIT (A/R)

Any action shown above is subject to the terms of the contract and does not relieve the Contractor of any of its obligations under the contract, including design and detailing.

Contract No.: DB11002F

By: _____ Date: _____

Not For Construction

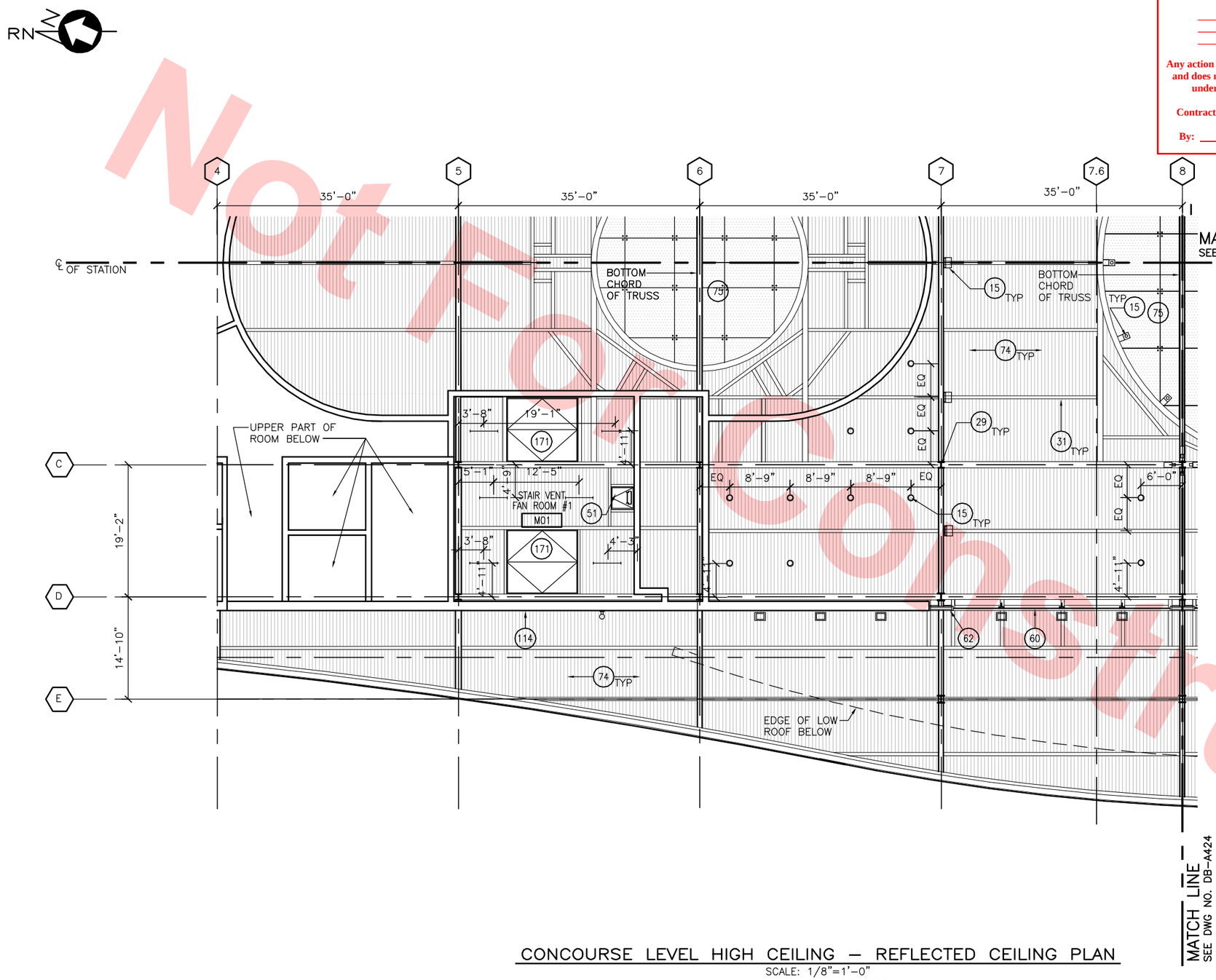

CONCOURSE LEVEL HIGH CEILING – REFLECTED CEILING PLAN

SCALE: 1/8"=1'-0"

DB-A420

KEY NOTES

- (15) LIGHT FIXTURE
- (29) STRUCTURAL COLUMN
- (31) STRUCTURAL MEMBER
- (51) ACCESS HATCH
- (60) FRAMELESS GLASS WALL SYSTEM TYPE 1
- (62) LOUVER
- (74) EXPOSED METAL DECK
- (75) HORIZONTAL STRUCTURAL POINT SUPPORTED GLASS SKYLIGHT SYSTEM
- (114) METAL WALL PANEL WP-2, SEE DWG NO. DB-A701
- (171) EQUIPMENT ACCESS ROOF SCUTTLE

LEGEND

- LINEAR FLUORESCENT STRIP LIGHT
- SURFACE MOUNTED METAL HALIDE CYLINDER
- ROOF MOUNTED UPLIGHT
- METAL HALIDE DIRECT/INDIRECT WALL SCONCE
- METAL HALIDE UPLIGHT, CANTILEVERED 5" FROM BOTTOM CHORD OF TRUSS FOR MOUNTING, SEE DETAIL 4/DB-A614
- METAL HALIDE ACCENT LIGHT, CANTILEVERED 6" FROM FACE OF WALL FOR MOUNTING, SEE DETAIL 3/DB-A614
- METAL HALIDE UPLIGHT MOUNTED TO COLUMN @ 20'-0" AFF TO BOTTOM OF FIXTURE
- ROOF HATCH

8' 0' 8' 16'

GRAPHIC SCALE

KEY PLAN

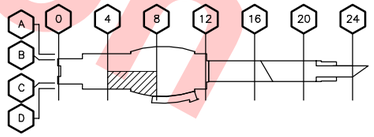

REV	DATE	BY	SUB	APP	DESCRIPTION
0	20130710				READINESS FOR CONSTRUCTION

DESIGNED BY S. DEBNATH
DRAWN BY R. COLLADO
CHECKED BY E. BALLADA
IN CHARGE R. BARLAAN
DATE 20130710

LICENSED ARCHITECT SAMESH DEBNATH No. C21523 STATE OF CALIFORNIA

Skanska Shimmick Herzog
1436 California Circle
Milpitas, California 95035
A Joint Venture

Anil Verma Associates, Inc.
1970 Broadway, Suite 535 Oakland, CA 94612
Phone: (510) 835-2537 Fax: (510) 535-2339

Lockwood, Andrews & Newnam, Inc. A LAN & BALY COMPANY

T·Y·LIN INTERNATIONAL

SUBMITTED _____

APPROVED _____

VTA BART SILICON VALLEY

BART SILICON VALLEY BERRYESSA EXTENSION

LINE, TRACK, STATIONS AND SYSTEMS
DESIGN UNIT 023
MILPITAS STATION
CONCOURSE LEVEL HIGH CEILING
REFLECTED CEILING PLAN
SHEET 2 OF 4

CADD FILENAME C700-S-DB-A422.dwg
SIZE D | SCALE 1/8"=1'-0"
CONTRACT NO. C700 | REV. 0
AREA CODE DB | SHEET NO. A422 | PAGE NO. 0420

JosephG Jun 26, 2013 – 2:07pm G:\Current Projects\VTA-Berryessa Extension Project\Station – Milpitas\CAD\Drawings Out\13-0710 C700 Milpitas Station – RFC Submit\C700-S-DB-A422.dwg

Santa Clara Valley Transportation Authority

____NO EXCEPTIONS TAKEN (NET)
____MAKE CORRECTIONS NOTED (MCN)
____AMEND AND RESUBMIT (A/R)

Any action shown above is subject to the terms of the contract and does not relieve the Contractor of any of its obligations under the contract, including design and detailing.

Contract No.: DB11002F

By: _____ Date: _____

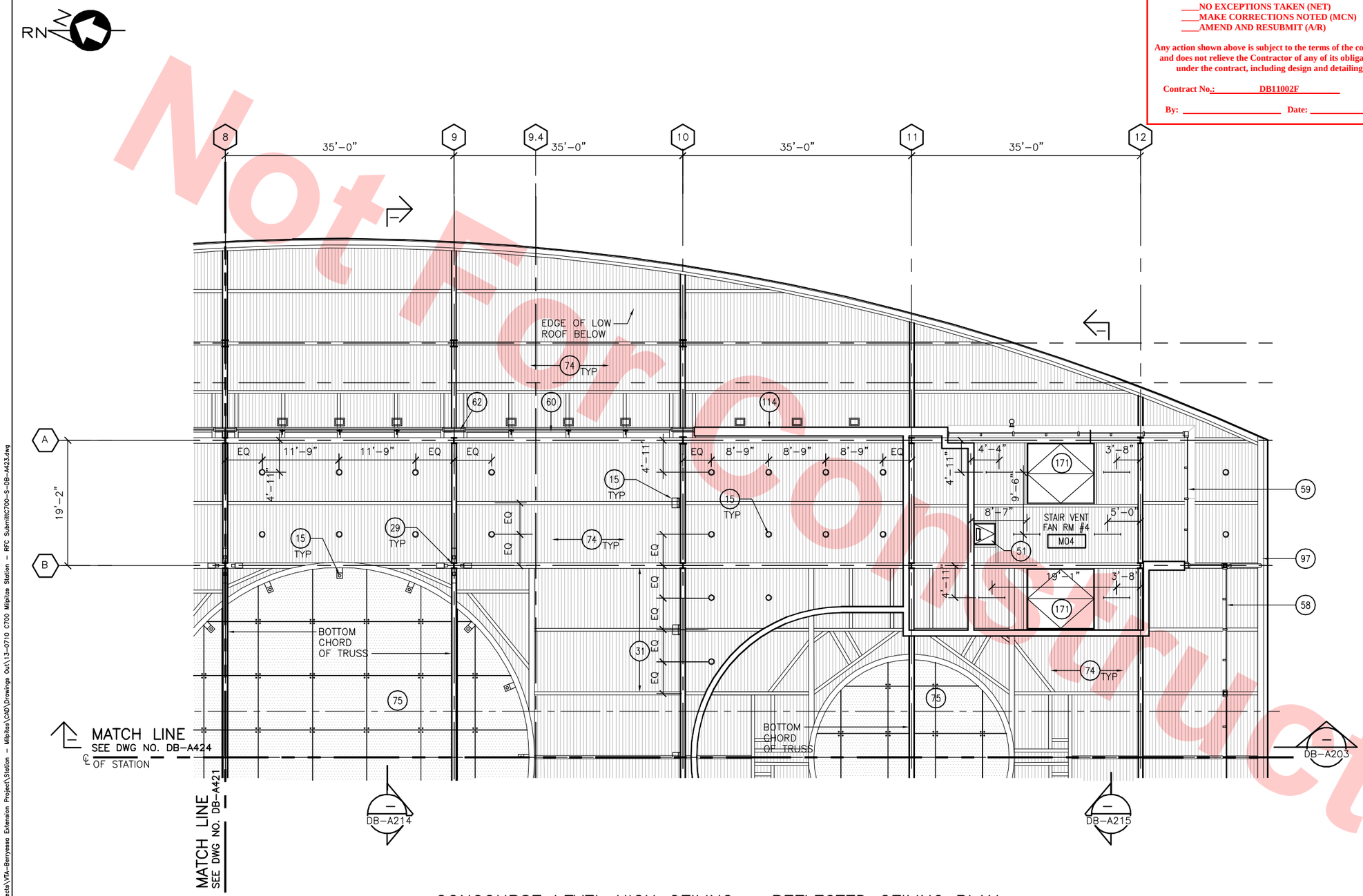

CONCOURSE LEVEL HIGH CEILING – REFLECTED CEILING PLAN

SCALE: 1/8"=1'-0"

DB-A420

KEY NOTES

- 15 LIGHT FIXTURE
- 29 STRUCTURAL COLUMN
- 31 STRUCTURAL MEMBER
- 51 ACCESS HATCH
- 58 GLASS WALL SYSTEM TYPE 2
- 59 GLASS WALL SYSTEM TYPE 3
- 60 FRAMELESS GLASS WALL SYSTEM TYPE 1
- 62 LOUVER
- 74 EXPOSED METAL DECK
- 75 HORIZONTAL STRUCTURAL POINT SUPPORTED GLASS SKYLIGHT SYSTEM
- 97 DOWNSPOUT/RAINWATER LEADER
- 114 METAL WALL PANEL WP-2, SEE DWG NO. DB-A701
- 171 EQUIPMENT ACCESS ROOF SCUTTLE

LEGEND

- LINEAR FLUORESCENT STRIP LIGHT
- SURFACE MOUNTED METAL HALIDE CYLINDER
- ROOF MOUNTED UPLIGHT
- METAL HALIDE DIRECT/INDIRECT WALL SCONCE
- METAL HALIDE UPLIGHT, CANTILEVERED 5" FROM BOTTOM CHORD OF TRUSS FOR MOUNTING, SEE DETAIL 4/DB-A614
- METAL HALIDE ACCENT LIGHT, CANTILEVERED 6" FROM FACE OF WALL FOR MOUNTING, SEE DETAIL 3/DB-A614
- METAL HALIDE UPLIGHT, MOUNTED TO COLUMN @ 20'-0" AFF TO BOTTOM OF FIXTURE
- ROOF HATCH

8' 0' 8' 16'

GRAPHIC SCALE

KEY PLAN

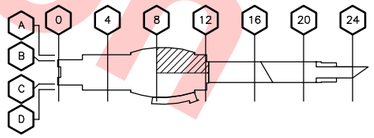

Not for Construction

REV	DATE	BY	SUB	APP	DESCRIPTION
0	20130710				READINESS FOR CONSTRUCTION

DESIGNED BY S. DEBNATH
DRAWN BY R. COLLADO
CHECKED BY E. BALLADA
IN CHARGE R. BARLAAN
DATE 20130710

LICENSED ARCHITECT SANJEEV DEBNATH No. C21523 STATE OF CALIFORNIA

Skanska Shimmick Herzog
1436 California Circle
Milpitas, California 95035
A Joint Venture

Anil Verma Associates, Inc.
1970 Broadway, Suite 525, Oakland, CA 94612
Phone: (510) 835-2537 Fax: (510) 835-2339
SUBMITTED

Lockwood, Andrews & Newnam, Inc. A LEO A DALY COMPANY
T·Y·LIN INTERNATIONAL
APPROVED

VTA BART SILICON VALLEY
BART SILICON VALLEY BERRYESSA EXTENSION

LINE, TRACK, STATIONS AND SYSTEMS
DESIGN UNIT 023
MILPITAS STATION
CONCOURSE LEVEL HIGH CEILING
REFLECTED CEILING PLAN
SHEET 3 OF 4

CADD FILENAME C700-S-DB-A423.dwg
SIZE D | SCALE 1/8"=1'-0"
CONTRACT NO. C700 | REV. 0
AREA CODE DB | SHEET NO. A423 | PAGE NO. 0421

JosephG Jun 26, 2013 – 2:08pm G:\Current Projects\VTA-Berryessa Extension Project\Station – Milpitas\CAD\Drawings Out\13-0710 C700 Milpitas Station – RFC Submittc700-S-DB-A423.dwg

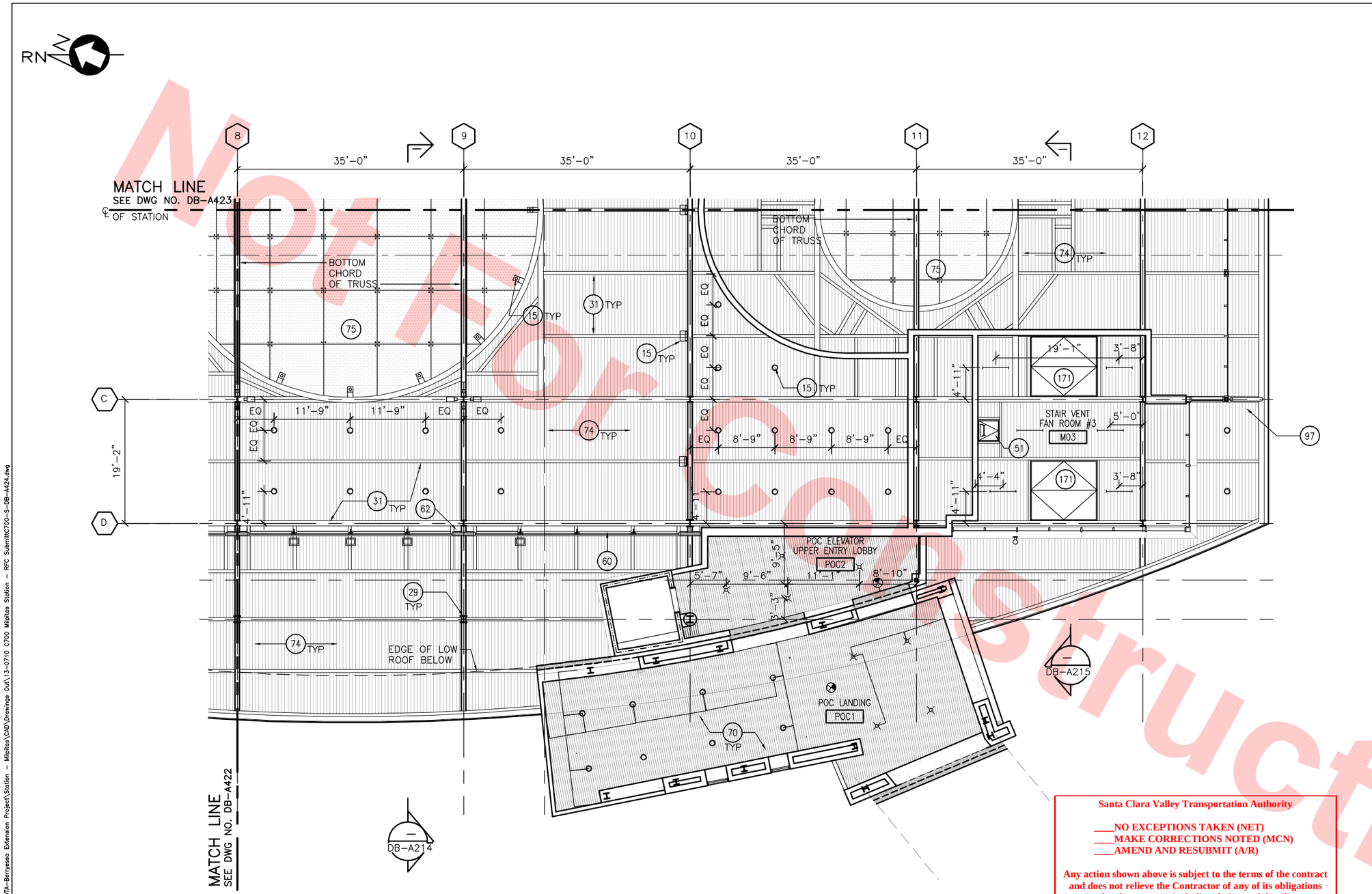

CONCOURSE LEVEL HIGH CEILING – REFLECTED CEILING PLAN

SCALE: 1/8"=1'-0"

DB-A420

KEY NOTES

- (15) LIGHT FIXTURE
- (29) STRUCTURAL COLUMN
- (31) STRUCTURAL MEMBER
- (51) ACCESS HATCH
- (60) FRAMELESS GLASS WALL SYSTEM TYPE 1
- (62) LOUVER
- (70) CEILING TYPE 1 – SUSPENDED LINEAR METAL PANEL
- (74) EXPOSED METAL DECK
- (75) HORIZONTAL STRUCTURAL POINT SUPPORTED GLASS SKYLIGHT SYSTEM
- (97) DOWNSPOUT/RAINWATER LEADER
- (114) METAL WALL PANEL WP-2, SEE DWG NO. DB-A701
- (171) EQUIPMENT ACCESS ROOF SCUTTLE

LEGEND

- LINEAR FLUORESCENT STRIP LIGHT
- RECESSED METAL HALIDE
- SURFACE MOUNTED METAL HALIDE CYLINDER
- ROOF MOUNTED UPLIGHT TYPE M12
- METAL HALIDE DIRECT/INDIRECT WALL SCONCE
- METAL HALIDE UPLIGHT, CANTILEVERED 5" FROM BOTTOM CHORD OF TRUSS FOR MOUNTING, SEE DETAIL 4/DB-A614
- METAL HALIDE ACCENT LIGHT, CANTILEVERED 6" FROM FACE OF WALL FOR MOUNTING, SEE DETAIL 3/DB-A614
- METAL HALIDE UPLIGHT, MOUNTED TO COLUMN @ 20'-0" AFF TO BOTTOM OF FIXTURE
- EXIT LIGHT
- ROOF HATCH

8' 0' 8' 16'

GRAPHIC SCALE

KEY PLAN

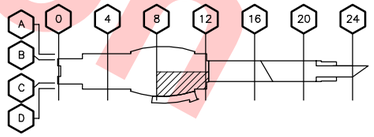

Santa Clara Valley Transportation Authority

____NO EXCEPTIONS TAKEN (NET)
____MAKE CORRECTIONS NOTED (MCN)
____AMEND AND RESUBMIT (A/R)

Any action shown above is subject to the terms of the contract and does not relieve the Contractor of any of its obligations under the contract, including design and detailing.

Contract No.: DB11002F

By: _____ Date: _____

Not For Construction

REV	DATE	BY	SUB	APP	DESCRIPTION
0	20130710				READINESS FOR CONSTRUCTION

DESIGNED BY S. DEBNATH
DRAWN BY R. COLLADO
CHECKED BY E. BALLADA
IN CHARGE R. BARLAAN
DATE 20130710

LICENSED ARCHITECT SOMESH DEBNATH No. C21523 STATE OF CALIFORNIA

Skanska Shimmick Herzog
1436 California Circle
Milpitas, California 95035
A Joint Venture

Anil Verma Associates, Inc.
1970 Broadway, Suite 525, Oakland, CA 94612
Phone: (510) 835-2537 Fax: (510) 835-2339
SUBMITTED

Lockwood, Andrews & Newnam, Inc. A LEO A DALY COMPANY
T·Y·LIN INTERNATIONAL
APPROVED

VTA BART SILICON VALLEY
BART SILICON VALLEY BERRYESSA EXTENSION

LINE, TRACK, STATIONS AND SYSTEMS
DESIGN UNIT 023
MILPITAS STATION
CONCOURSE LEVEL HIGH CEILING
REFLECTED CEILING PLAN
SHEET 4 OF 4

CADD FILENAME C700-S-DB-A424.dwg
SIZE D | SCALE 1/8"=1'-0"
CONTRACT NO. C700 | REV. 0
AREA CODE DB | SHEET NO. A424 | PAGE NO. 0422

JosephG Jun 26, 2013 – 2:08pm G:\Current Projects\VTA-Berryessa Extension Project\Station – Milpitas\CAD\Drawings Out\13-0710 C700 Milpitas Station – RFC Submit\C700-S-DB-A424.dwg

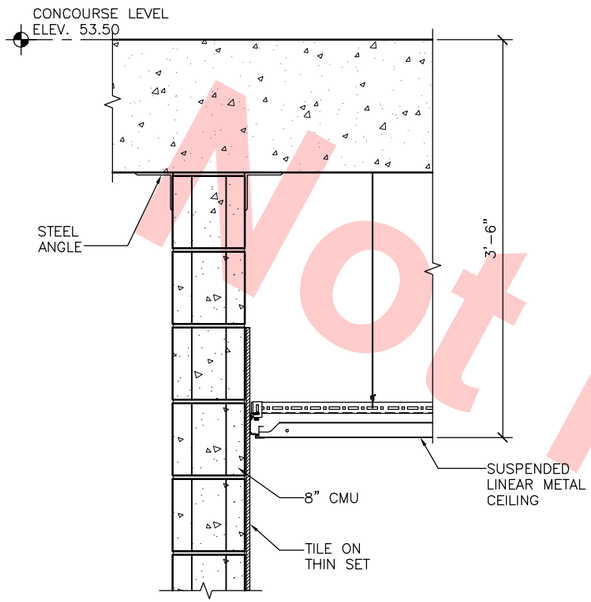

SUSPENDED METAL CEILING @ CMU (1)
SCALE: 1 1/2" = 1'-0
DB-A425 DB-A401

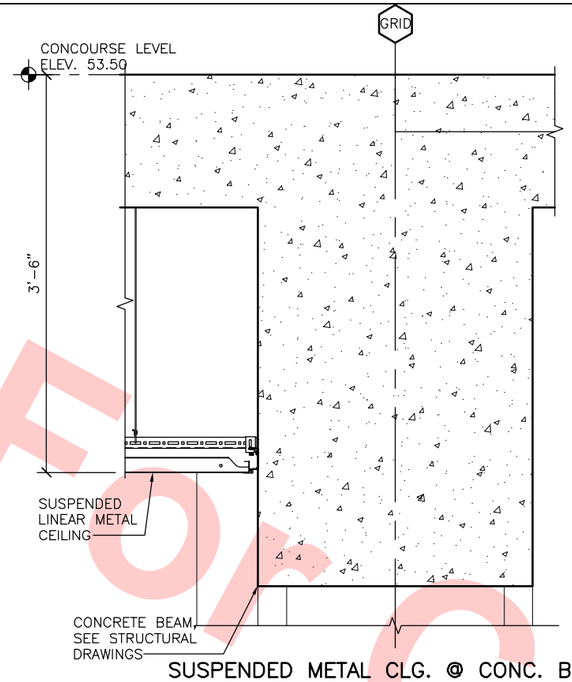

SUSPENDED METAL CLG. @ CONC. BEAM (2)
SCALE: 1 1/2" = 1'-0
DB-A425 DB-A401 DB-A403

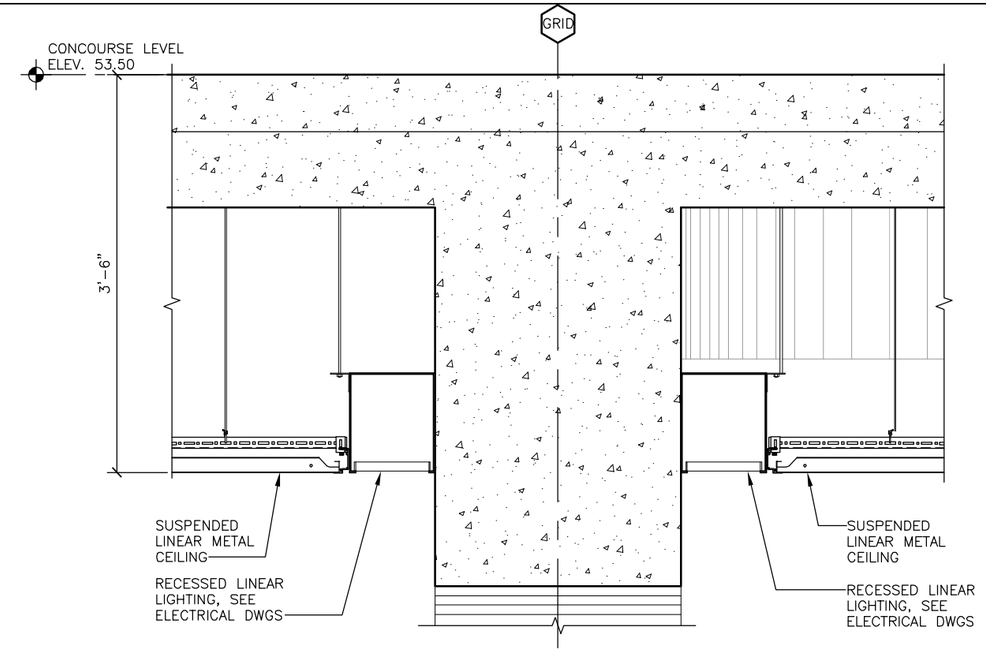

SUSPENDED METAL CLG. @ CONC. BEAM (3)
SCALE: 1 1/2" = 1'-0
DB-A425 DB-A401 DB-A403 DB-A404

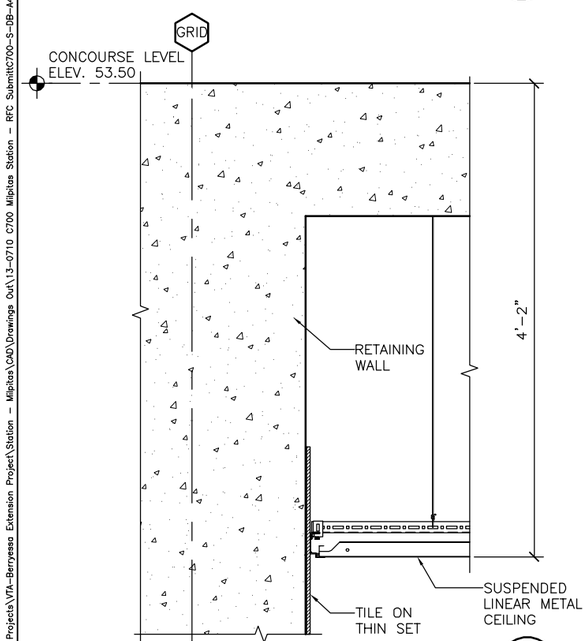

SUSP. METAL CLG. @ RETAINING WALL (4)
SCALE: 1 1/2" = 1'-0
DB-A425 DB-A403 DB-A404 DB-A405

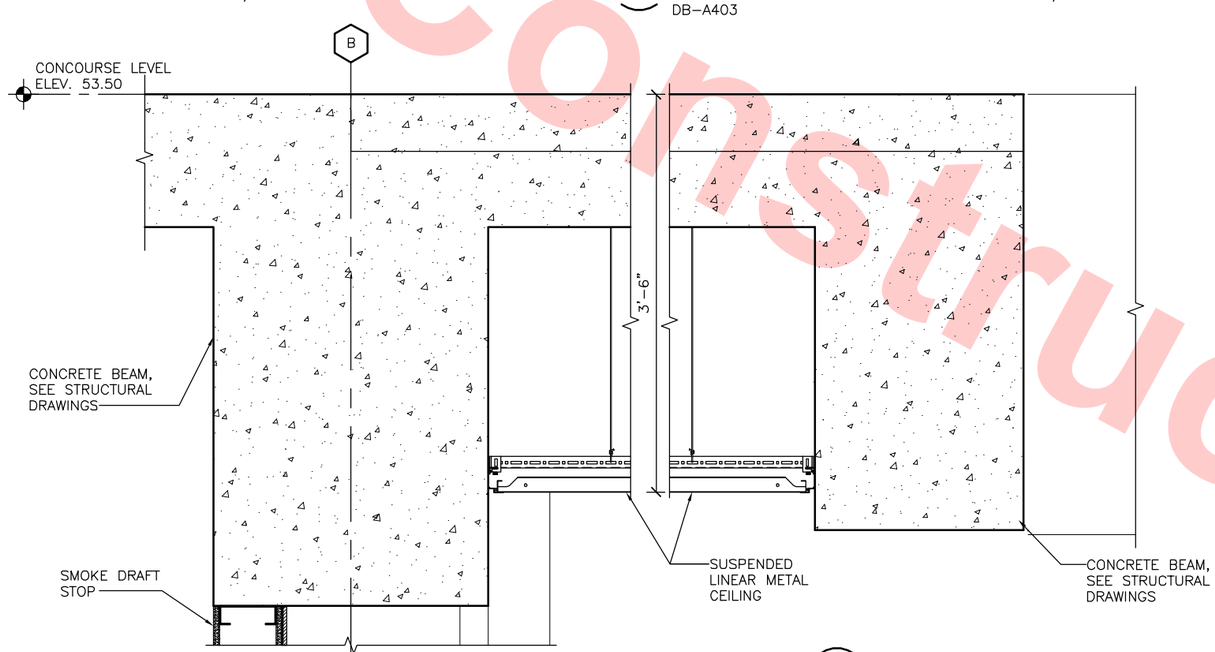

SUSPENDED METAL CLG. @ CONC. BEAM (5)
SCALE: 1 1/2" = 1'-0
DB-A425 DB-A402

Santa Clara Valley Transportation Authority

____NO EXCEPTIONS TAKEN (NET)
____MAKE CORRECTIONS NOTED (MCN)
____AMEND AND RESUBMIT (A/R)

Any action shown above is subject to the terms of the contract and does not relieve the Contractor of any of its obligations under the contract, including design and detailing.

Contract No.: DB11002F

By: _____ **Date:** _____

Not For Construction

REV	DATE	BY	SUB	APP	DESCRIPTION
0	20130710				READINESS FOR CONSTRUCTION

DESIGNED BY S. DEBNATH
DRAWN BY R. COLLADO
CHECKED BY E. BALLADA
IN CHARGE R. BARLAAN
DATE 20130710

LICENSED ARCHITECT SOMESH DEBNATH No. C21523 STATE OF CALIFORNIA

Skanska Shimmick Herzog
1436 California Circle
Milpitas, California 95035
A Joint Venture

Anil Verma Associates, Inc.
1970 Broadway, Suite 325
Oakland, CA 94612
Phone: (510) 535-2537 Fax: (510) 535-2339

Lockwood, Andrews & Newnam, Inc. A LEO A DALY COMPANY
T·Y·LIN INTERNATIONAL

SUBMITTED _____
APPROVED _____

VTA BART SILICON VALLEY
BART SILICON VALLEY BERRYESSA EXTENSION

LINE, TRACK, STATIONS AND SYSTEMS
DESIGN UNIT 023
MILPITAS STATION

CEILING DETAILS

CADD FILENAME C700-S-DB-A425.dwg
SIZE D | SCALE 1 1/2"=1'-0"
CONTRACT NO. C700 | REV. 0
AREA CODE DB | SHEET NO. A425 | PAGE NO. 0423

JosephG Jun 26, 2013 - 2:09pm G:\Current Projects\VTA-Berryessa Extension Project\Station - Milpitas\CAD\Drawings Out\13-0710 C700 Milpitas Station - RFC Submit\C700-S-DB-A425.dwg

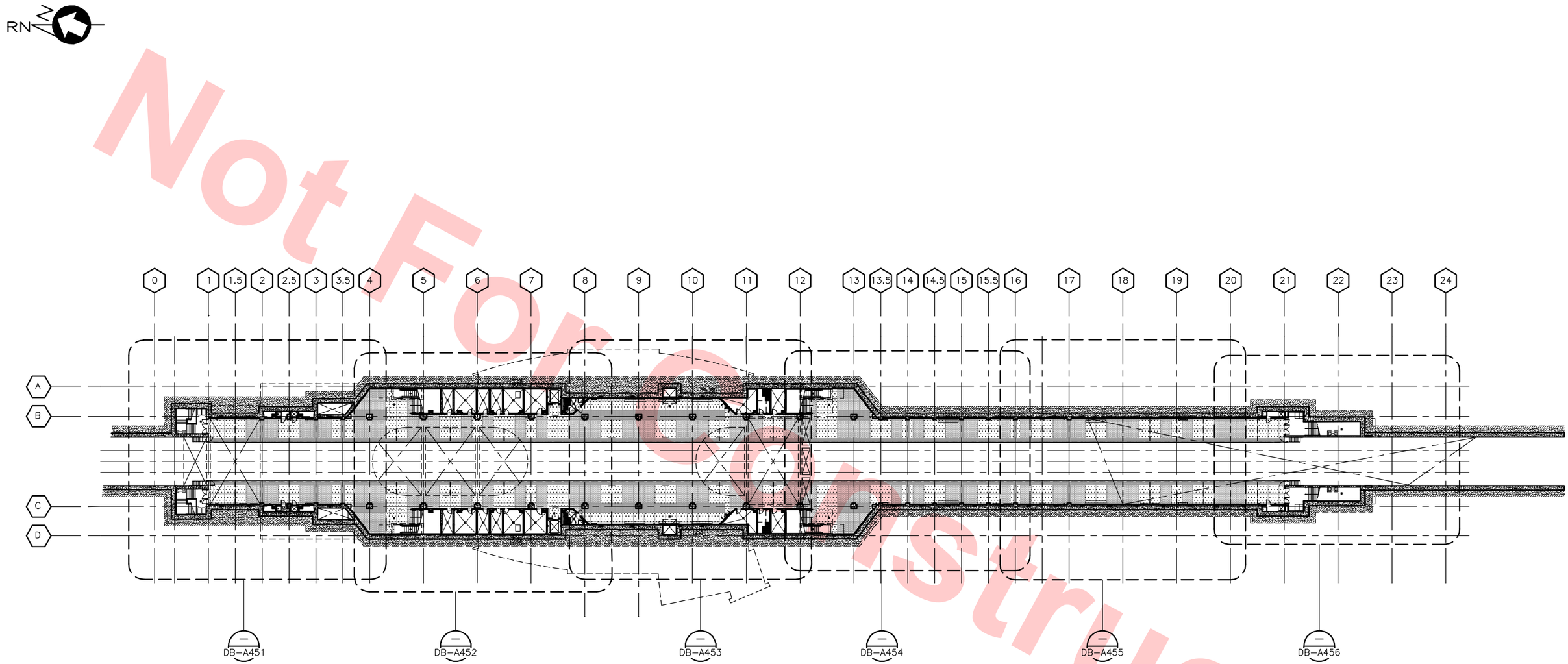

KEY FLOOR PATTERN PLAN – PLATFORM LEVEL

SCALE: 1/32"=1'–0"

Not For Construction

Santa Clara Valley Transportation Authority

____NO EXCEPTIONS TAKEN (NET)
____MAKE CORRECTIONS NOTED (MCN)
____AMEND AND RESUBMIT (A/R)

Any action shown above is subject to the terms of the contract and does not relieve the Contractor of any of its obligations under the contract, including design and detailing.

Contract No.: DB11002F

By: _____ **Date:** _____

32' 0' 32' 64'

GRAPHIC SCALE

REV	DATE	BY	SUB	APP	DESCRIPTION
0	20130710				READINESS FOR CONSTRUCTION

DESIGNED BY S. DEBNATH
DRAWN BY R. COLLADO
CHECKED BY E. BALLADA
IN CHARGE R. BARLAAN
DATE 20130710

LICENSED ARCHITECT SURESH DEBNATH No. C21523 STATE OF CALIFORNIA

Skanska Shimmick Herzog
1436 California Circle
Milpitas, California 95035
A Joint Venture

Anil Verma Associates, Inc.
1970 Broadway, Suite 525, Oakland, CA 94612
Phone: (510) 835-2537 Fax: (510) 835-2339

Lockwood, Andrews & Newnam, Inc. A LEO A DALY COMPANY | T·Y·LIN INTERNATIONAL

SUBMITTED _____ APPROVED _____

VTA BART SILICON VALLEY

BART SILICON VALLEY BERRYESSA EXTENSION

LINE, TRACK, STATIONS AND SYSTEMS
DESIGN UNIT 023
MILPITAS STATION
KEY PLAN
PLATFORM LEVEL
FLOOR PATTERN PLAN

CADD FILENAME C700–S–DB–A450.dwg
SIZE D | SCALE 1/32"=1'–0"
CONTRACT NO. C700 | REV. 0
AREA CODE DB | SHEET NO. A450 | PAGE NO. 0424

JosephG Jun 26, 2013 – 2:09pm G:\Current Projects\VTA–Berryessa Extension Project\Station – Milpitas\CAD\Drawings Out\13–0710 C700 Milpitas Station – RFC Submit\C700–S–DB–A450.dwg

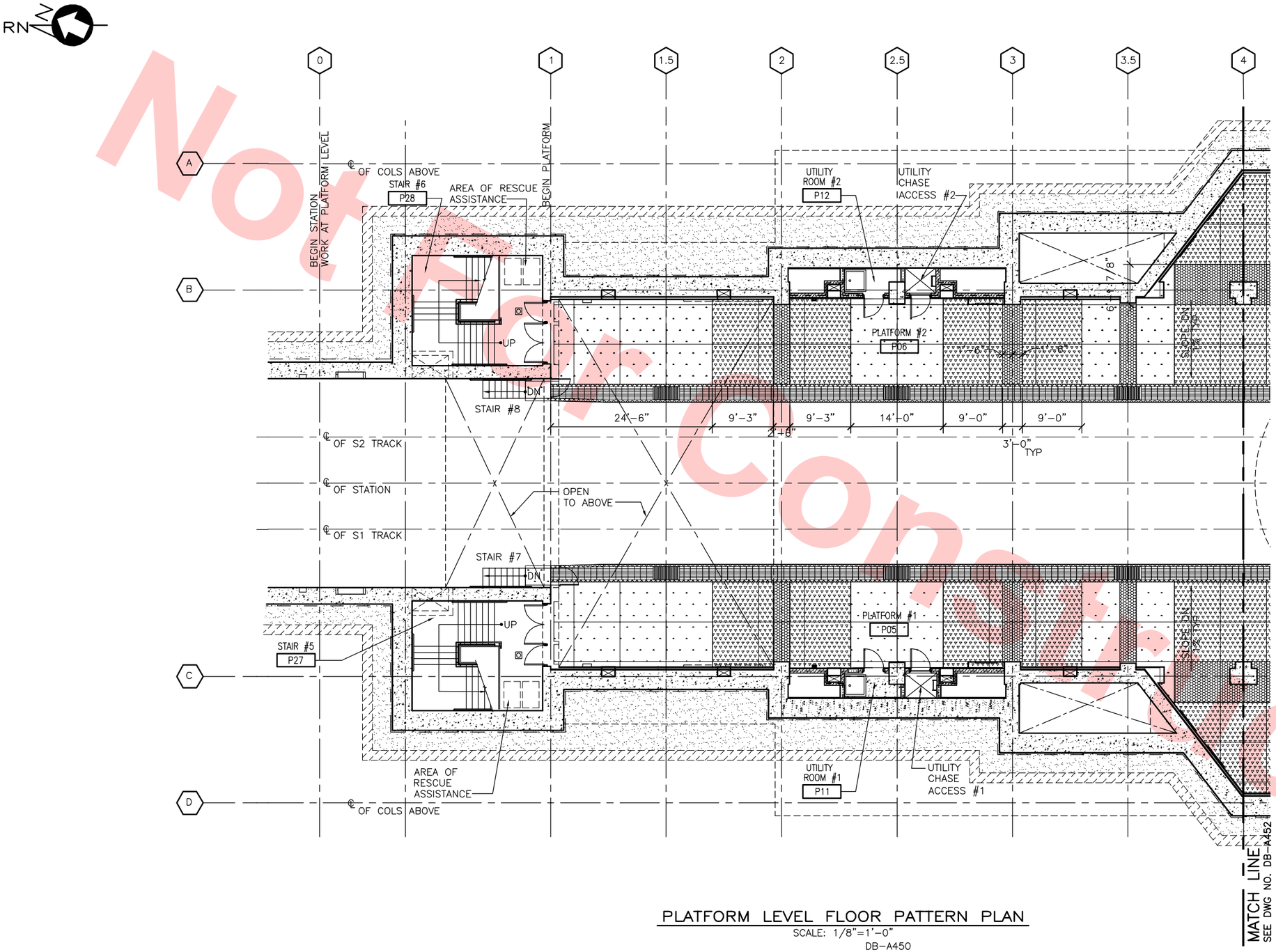

PLATFORM LEVEL FLOOR PATTERN PLAN

SCALE: 1/8"=1'-0"

DB-A450

Not For Construction

LEGEND

- TACTILE ACCESSIBLE DOOR INDICATOR, BLACK
- TACTILE DOOR INDICATOR, 24 x 24 BLACK BFS DET 4/AS42
- TACTILE WARNING BAND, 12 x 12 YELLOW TILE, BFS DET 5/AS42
- TILE T-1, SEE DB-A701
- TILE T-2, SEE DB-A701
- TILE T-3 (ACCENT), SEE DB-A701
- TILE T-4, SEE DB-A701
- TILE T-6, SEE DB-A701
- TILE T-7, SEE DB-A701
- TILE T-8 (ACCENT), SEE DB-A701
- EPOXY
- RESILIENT TILE FLOORING
- TACTILE GUIDE STRIP
- TILE STRIP

Santa Clara Valley Transportation Authority

____NO EXCEPTIONS TAKEN (NET)
____MAKE CORRECTIONS NOTED (MCN)
____AMEND AND RESUBMIT (A/R)

Any action shown above is subject to the terms of the contract and does not relieve the Contractor of any of its obligations under the contract, including design and detailing.

Contract No.: DB11002F

By: _____ **Date:** _____

8' 0' 8' 16'

GRAPHIC SCALE

KEY PLAN

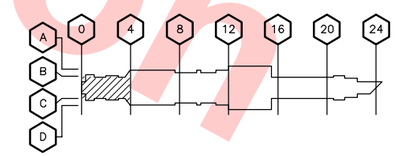

REV	DATE	BY	SUB	APP	DESCRIPTION
0	20130710				READINESS FOR CONSTRUCTION

DESIGNED BY S. DEBNATH
DRAWN BY R. COLLADO
CHECKED BY E. BALLADA
IN CHARGE R. BARLAAN
DATE 20130710

LICENSED ARCHITECT SOMESH DEBNATH No. C21523 STATE OF CALIFORNIA

Skanska Shimmick Herzog
1436 California Circle
Milpitas, California 95035
A Joint Venture

Anil Verma Associates, Inc.
1970 Broadway, Suite 525, Oakland, CA 94612
Phone: (510) 835-2537 Fax: (510) 835-2339

Lockwood, Andrews & Newnam, Inc. A LEO A DALY COMPANY

T·Y·LIN INTERNATIONAL

SUBMITTED _____ APPROVED _____

VTA BART SILICON VALLEY

BART SILICON VALLEY BERRYESSA EXTENSION

LINE, TRACK, STATIONS AND SYSTEMS
DESIGN UNIT 023
MILPITAS STATION
PLATFORM LEVEL
FLOOR PATTERN PLAN
SHEET 1 OF 6

CADD FILENAME C700-S-DB-A451.dwg
SIZE D | SCALE 1/8"=1'-0"
CONTRACT NO. C700 | REV. 0
AREA CODE DB | SHEET NO. A451 | PAGE NO. 0425

Joseph G Jun 26, 2013 – 2:10pm G:\Current Projects\VTA-Berryessa Extension Project\Station – Milpitas\CAD\Drawings Out\13-0710 C700 Milpitas Station – RFC Submit\C700-S-DB-A451.dwg

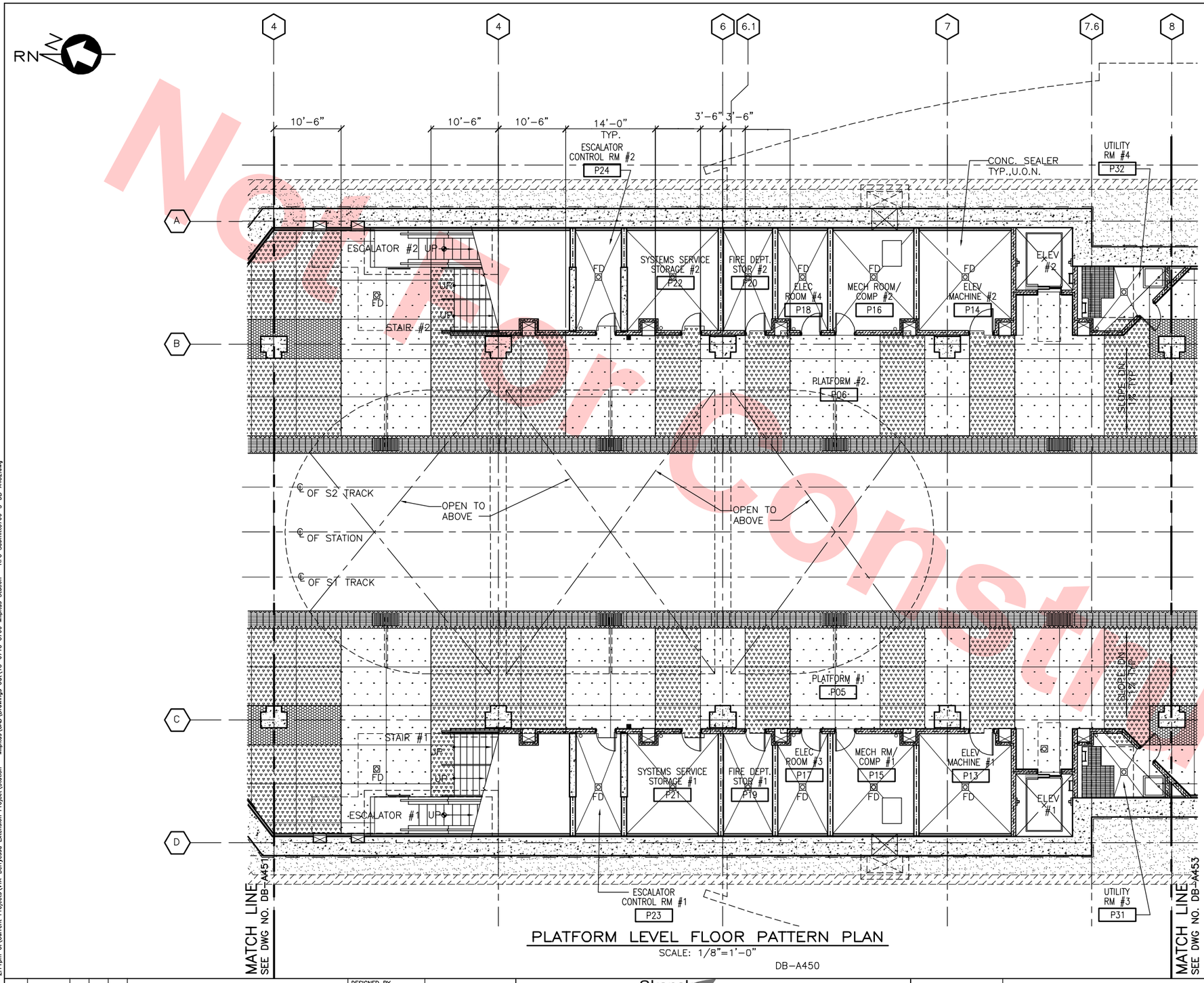

PLATFORM LEVEL FLOOR PATTERN PLAN

SCALE: 1/8"=1'-0"

DB-A450

LEGEND

- TACTILE ACCESSIBLE DOOR INDICATOR, BLACK
- TACTILE DOOR INDICATOR, 24 x 24 BLACK BFS DET 4/AS42
- TACTILE WARNING BAND, 12 x 12 YELLOW TILE, BFS DET 5/AS42
- TILE T-1, SEE DB-A701
- TILE T-2, SEE DB-A701
- TILE T-3 (ACCENT), SEE DB-A701
- TILE T-4, SEE DB-A701
- TILE T-6, SEE DB-A701
- TILE T-7, SEE DB-A701
- TILE T-8 (ACCENT), SEE DB-A701
- EPOXY
- RESILIENT TILE FLOORING
- TACTILE GUIDE STRIP
- TILE STRIP

Santa Clara Valley Transportation Authority

____NO EXCEPTIONS TAKEN (NET)
____MAKE CORRECTIONS NOTED (MCN)
____AMEND AND RESUBMIT (A/R)

Any action shown above is subject to the terms of the contract and does not relieve the Contractor of any of its obligations under the contract, including design and detailing.

Contract No.: DB11002F

By: _____ **Date:** _____

8' 0' 8' 16'

GRAPHIC SCALE

KEY PLAN

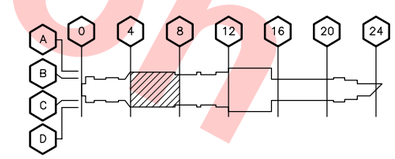

Not for Construction

REV	DATE	BY	SUB	APP	DESCRIPTION
0	20130710				READINESS FOR CONSTRUCTION

DESIGNED BY S. DEBNATH
DRAWN BY R. COLLADO
CHECKED BY E. BALLADA
IN CHARGE R. BARLAAN
DATE 20130710

LICENSED ARCHITECT SANJEEV DEBNATH No. C21523 STATE OF CALIFORNIA

Skanska Shimmick Herzog
1436 California Circle Milpitas, California 95035
A Joint Venture

Anil Verma Associates, Inc. 1970 Broadway, Suite 525 Oakland, CA 94612 Phone: (510) 835-2537 Fax: (510) 835-2339
SUBMITTED

Lockwood, Andrews & Newnam, Inc. A CH2M HILL COMPANY
T·Y·LIN INTERNATIONAL
APPROVED

VTA BART SILICON VALLEY
BART SILICON VALLEY BERRYESSA EXTENSION

LINE, TRACK, STATIONS AND SYSTEMS
DESIGN UNIT 023
MILPITAS STATION
PLATFORM LEVEL
FLOOR PATTERN PLAN
SHEET 2 OF 6

CADD FILENAME C700-S-DB-A452.dwg
SIZE D | SCALE 1/8"=1'-0"
CONTRACT NO. C700 | REV. 0
AREA CODE DB | SHEET NO. A452 | PAGE NO. 0426

Joseph G Jun 26, 2013 - 2:11pm G:\Current Projects\VTA-Berryessa Extension Project\Station - Milpitas\CAD\Drawings Out\13-0710 C700 Milpitas Station - RFC Submit\C700-S-DB-A452.dwg

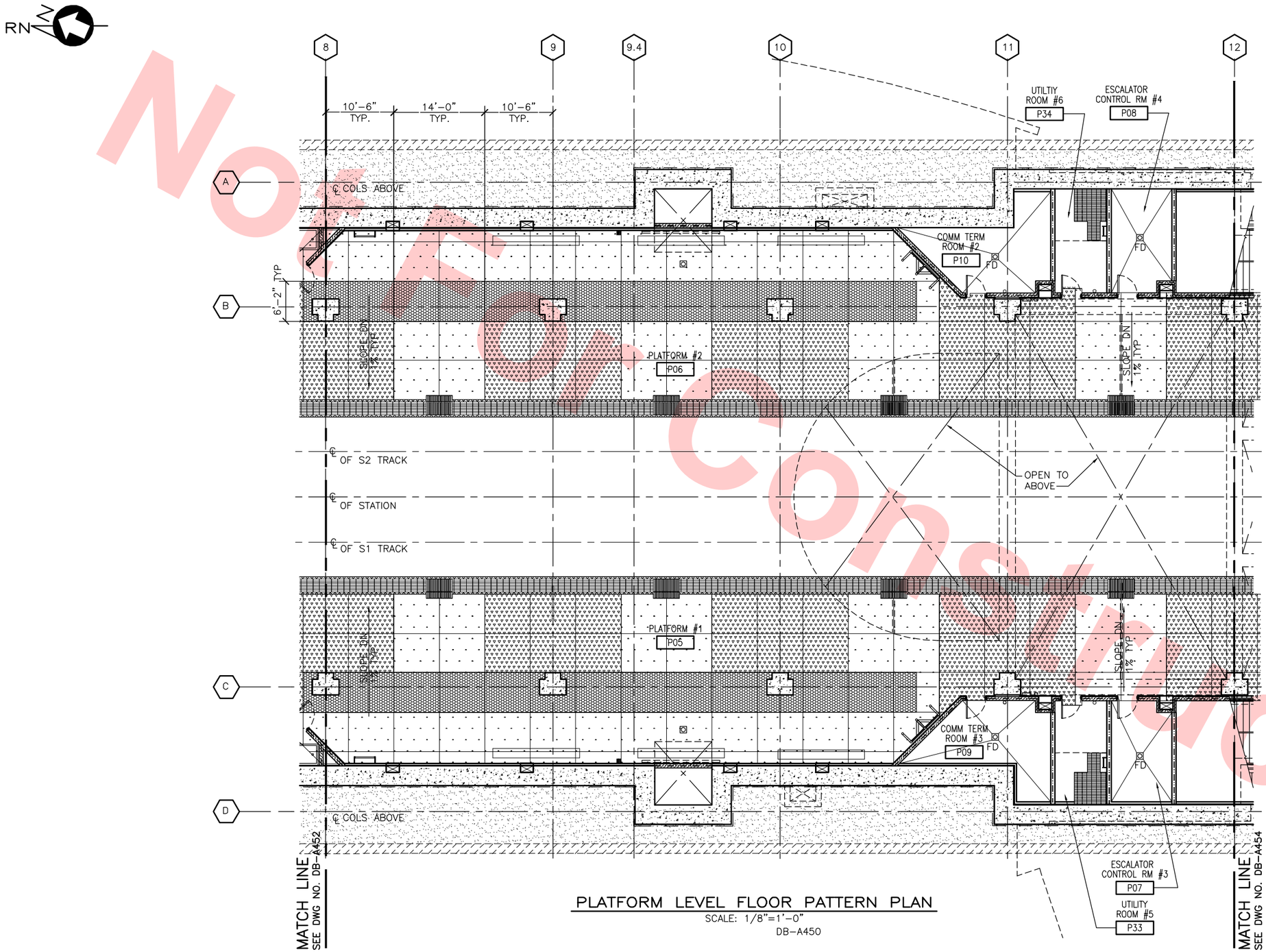

PLATFORM LEVEL FLOOR PATTERN PLAN

SCALE: 1/8"=1'-0"

DB-A450

LEGEND

- TACTILE ACCESSIBLE DOOR INDICATOR, BLACK
- TACTILE DOOR INDICATOR, 24 x 24 BLACK BFS DET 4/AS42
- TACTILE WARNING BAND, 12 x 12 YELLOW TILE, BFS DET 5/AS42
- TILE T-1, SEE DB-A701
- TILE T-2, SEE DB-A701
- TILE T-3 (ACCENT), SEE DB-A701
- TILE T-4, SEE DB-A701
- TILE T-6, SEE DB-A701
- TILE T-7, SEE DB-A701
- TILE T-8 (ACCENT), SEE DB-A701
- EPOXY
- RESILIENT TILE FLOORING
- TACTILE GUIDE STRIP
- TILE STRIP

Santa Clara Valley Transportation Authority

____NO EXCEPTIONS TAKEN (NET)
____MAKE CORRECTIONS NOTED (MCN)
____AMEND AND RESUBMIT (A/R)

Any action shown above is subject to the terms of the contract and does not relieve the Contractor of any of its obligations under the contract, including design and detailing.

Contract No.: DB11002F

By: _____ **Date:** _____

8' 0' 8' 16'

GRAPHIC SCALE

KEY PLAN

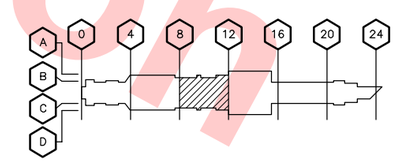

Not For Construction

REV	DATE	BY	SUB	APP	DESCRIPTION
0	20130710				READINESS FOR CONSTRUCTION

DESIGNED BY S. DEBNATH
DRAWN BY R. COLLADO
CHECKED BY E. BALLADA
IN CHARGE R. BARLAAN
DATE 20130710

LICENSED ARCHITECT SANJEEV DEBNATH No. C21523 STATE OF CALIFORNIA

Skanska Shimmick Herzog
1436 California Circle
Milpitas, California 95035
A Joint Venture

Anil Verma Associates, Inc.
1970 Broadway, Suite 525 Oakland, CA 94612
Phone: (510) 835-2537 Fax: (510) 835-2339
SUBMITTED

Lockwood, Andrews & Newnam, Inc. A LEA & BALY COMPANY
T·Y·LIN INTERNATIONAL
APPROVED

VTA BART SILICON VALLEY
BART SILICON VALLEY BERRYESSA EXTENSION

LINE, TRACK, STATIONS AND SYSTEMS
DESIGN UNIT 023
MILPITAS STATION
PLATFORM LEVEL
FLOOR PATTERN PLAN
SHEET 3 OF 6

CADD FILENAME C700-S-DB-A453.dwg
SIZE D | SCALE 1/8"=1'-0"
CONTRACT NO. C700 | REV. 0
AREA CODE DB | SHEET NO. A453 | PAGE NO. 0427

JosephG Jun 26, 2013 – 2:11pm G:\Current Projects\VTA-Berryessa Extension Project\Station – Milpitas\CAD\Drawings Out\13-0710 C700 Milpitas Station – RFC Submit\C700-S-DB-A453.dwg

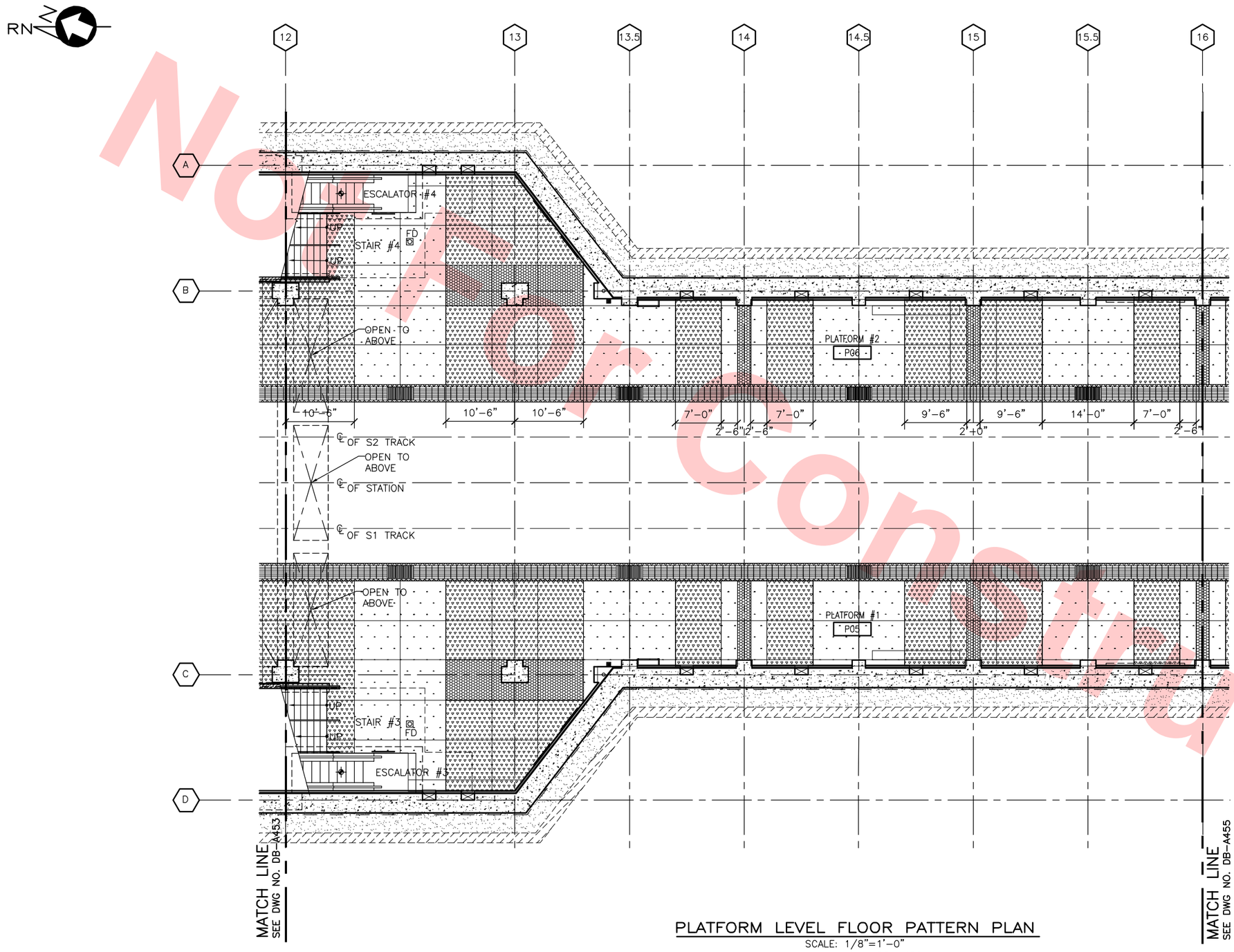

PLATFORM LEVEL FLOOR PATTERN PLAN

SCALE: 1/8"=1'-0"

DB-A450

Not for Construction

LEGEND

- TACTILE ACCESSIBLE DOOR INDICATOR, BLACK
- TACTILE DOOR INDICATOR, 24 x 24 BLACK BFS DET 4/AS42
- TACTILE WARNING BAND, 12 x 12 YELLOW TILE, BFS DET 5/AS42
- TILE T-1, SEE DB-A701
- TILE T-2, SEE DB-A701
- TILE T-3 (ACCENT), SEE DB-A701
- TILE T-4, SEE DB-A701
- TILE T-6, SEE DB-A701
- TILE T-7, SEE DB-A701
- TILE T-8 (ACCENT), SEE DB-A701
- EPOXY
- RESILIENT TILE FLOORING
- TACTILE GUIDE STRIP
- TILE STRIP

Santa Clara Valley Transportation Authority

____NO EXCEPTIONS TAKEN (NET)
____MAKE CORRECTIONS NOTED (MCN)
____AMEND AND RESUBMIT (A/R)

Any action shown above is subject to the terms of the contract and does not relieve the Contractor of any of its obligations under the contract, including design and detailing.

Contract No.: DB11002F

By: _____ **Date:** _____

8' 0' 8' 16'

GRAPHIC SCALE

KEY PLAN

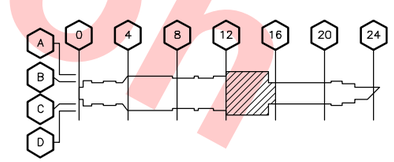

REV	DATE	BY	SUB	APP	DESCRIPTION
0	20130710				READINESS FOR CONSTRUCTION

DESIGNED BY S. DEBNATH
DRAWN BY R. COLLADO
CHECKED BY E. BALLADA
IN CHARGE R. BARLAAN
DATE 20130710

LICENSED ARCHITECT SOMESH DEBNATH No. C21523 STATE OF CALIFORNIA

Skanska Shimmick Herzog
1436 California Circle
Milpitas, California 95035
A Joint Venture

Anil Verma Associates, Inc.
1970 Broadway, Suite 525, Oakland, CA 94612
Phone: (510) 835-2537 Fax: (510) 835-2339
SUBMITTED

Lockwood, Andrews & Newnam, Inc. A LAN & BALV COMPANY
T·Y·LIN INTERNATIONAL
APPROVED

VTA BART SILICON VALLEY
BART SILICON VALLEY BERRYESSA EXTENSION

LINE, TRACK, STATIONS AND SYSTEMS
DESIGN UNIT 023
MILPITAS STATION
PLATFORM LEVEL
FLOOR PATTERN PLAN
SHEET 4 OF 6

CADD FILENAME C700-S-DB-A454.dwg
SIZE D | SCALE 1/8"=1'-0"
CONTRACT NO. C700 | REV. 0
AREA CODE DB | SHEET NO. A454 | PAGE NO. 0428

JosephG Jun 26, 2013 – 2:12pm G:\Current Projects\VTA-Berryessa Extension Project\Station – Milpitas\CAD\Drawings Out\13-0710 C700 Milpitas Station – RFC Submit\C700-S-DB-A454.dwg

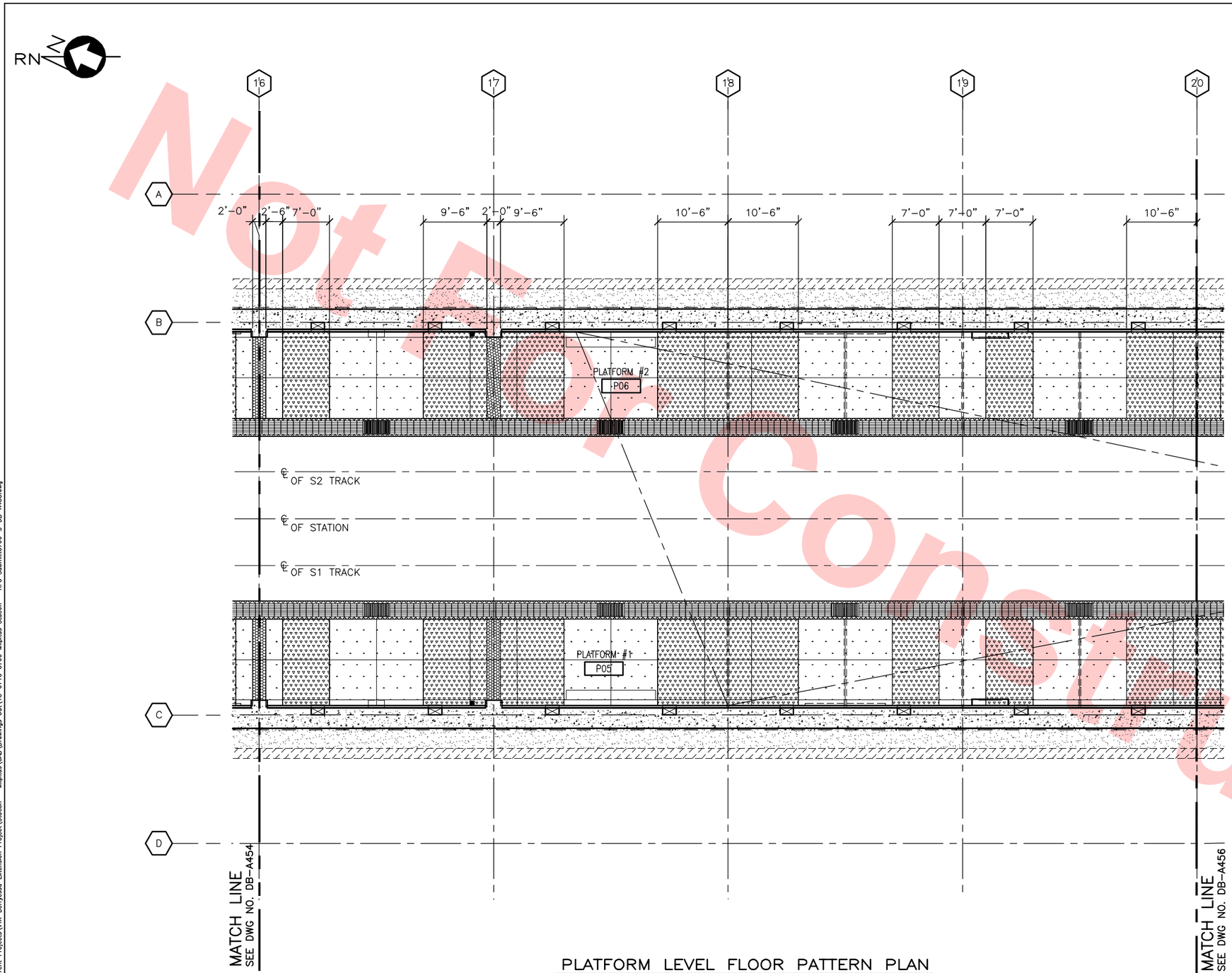

PLATFORM LEVEL FLOOR PATTERN PLAN

SCALE: 1/8"=1'-0"

DB-A450

Not For Construction

LEGEND

- TACTILE ACCESSIBLE DOOR INDICATOR, BLACK
- TACTILE DOOR INDICATOR, 24 x 24 BLACK BFS DET 4/AS42
- TACTILE WARNING BAND, 12 x 12 YELLOW TILE, BFS DET 5/AS42
- TILE T-1, SEE DB-A701
- TILE T-2, SEE DB-A701
- TILE T-3 (ACCENT), SEE DB-A701
- TILE T-4, SEE DB-A701
- TILE T-6, SEE DB-A701
- TILE T-7, SEE DB-A701
- TILE T-8 (ACCENT), SEE DB-A701
- EPOXY
- RESILIENT TILE FLOORING
- TACTILE GUIDE STRIP
- TILE STRIP

Santa Clara Valley Transportation Authority

____NO EXCEPTIONS TAKEN (NET)
____MAKE CORRECTIONS NOTED (MCN)
____AMEND AND RESUBMIT (A/R)

Any action shown above is subject to the terms of the contract and does not relieve the Contractor of any of its obligations under the contract, including design and detailing.

Contract No.: DB11002F

By: _____ Date: _____

8' 0' 8' 16'

GRAPHIC SCALE

KEY PLAN

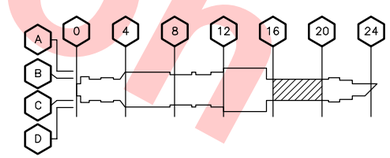

REV	DATE	BY	SUB	APP	DESCRIPTION
0	20130710				READINESS FOR CONSTRUCTION

DESIGNED BY S. DEBNATH
DRAWN BY R. COLLADO
CHECKED BY E. BALLADA
IN CHARGE R. BARLAAN
DATE 20130710

LICENSED ARCHITECT SOMESH DEBNATH No. C21523 STATE OF CALIFORNIA

Skanska Shimmick Herzog
1436 California Circle
Milpitas, California 95035
A Joint Venture

Anil Verma Associates, Inc.
1970 Broadway, Suite 535, Oakland, CA 94612
Phone: (510) 835-2537 Fax: (510) 835-2339

SUBMITTED

Lockwood, Andrews & Newnam, Inc. A LEO A DALY COMPANY
T·Y·LIN INTERNATIONAL

APPROVED

VTA BART SILICON VALLEY
BART SILICON VALLEY BERRYESSA EXTENSION

LINE, TRACK, STATIONS AND SYSTEMS
DESIGN UNIT 023
MILPITAS STATION
PLATFORM LEVEL
FLOOR PATTERN PLAN
SHEET 5 OF 6

CADD FILENAME C700-S-DB-A455.dwg
SIZE D | SCALE 1/8"=1'-0"
CONTRACT NO. C700 | REV. 0
AREA CODE DB | SHEET NO. A455 | PAGE NO. 0429

JosephG Jun 26, 2013 - 2:12pm G:\Current Projects\VTA-Berryessa Extension Project\Station - Milpitas\CAD\Drawings Out\13-0710 C700 Milpitas Station - RFC Submit\C700-S-DB-A455.dwg

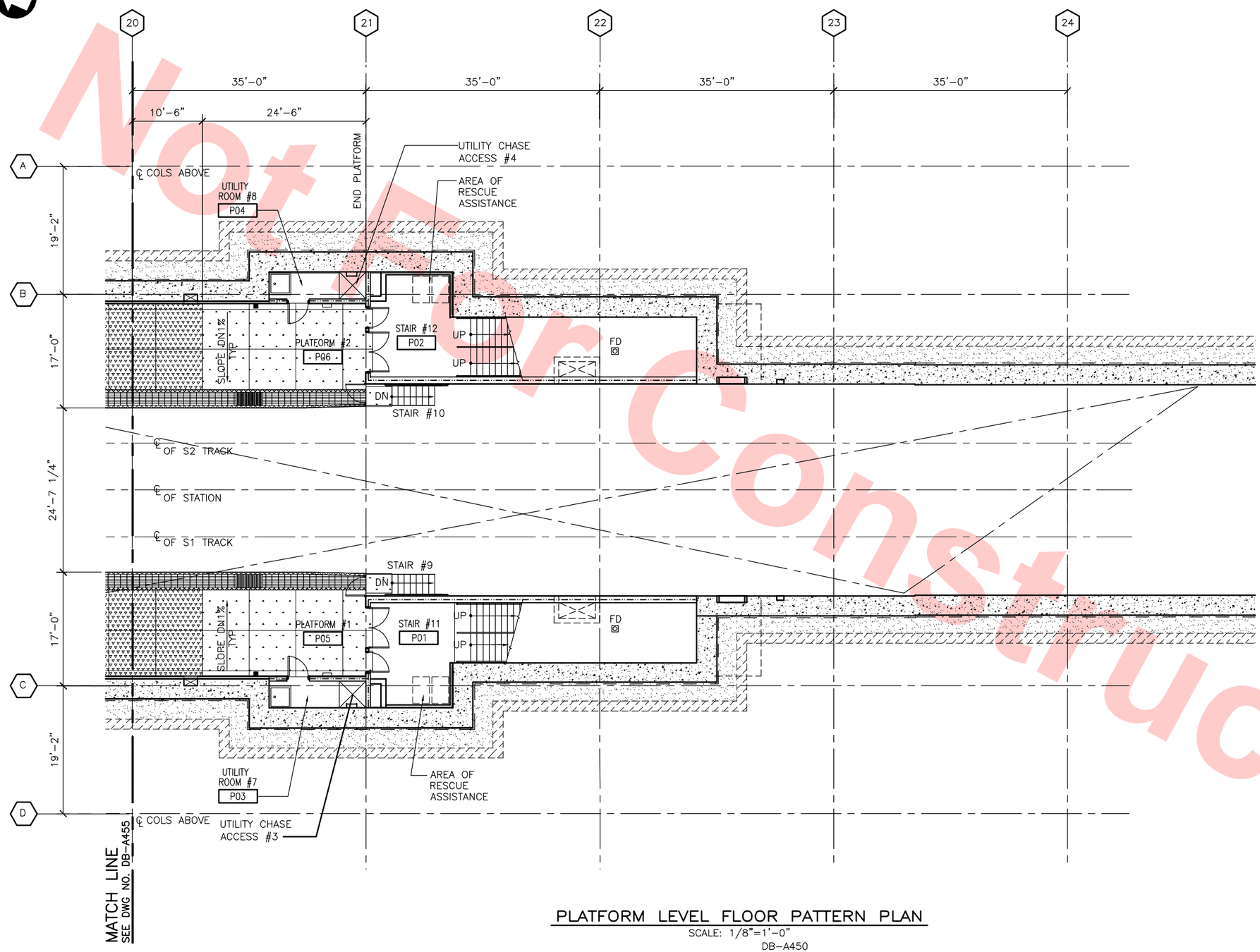

PLATFORM LEVEL FLOOR PATTERN PLAN

SCALE: 1/8"=1'-0"

DB-A450

LEGEND

- TACTILE ACCESSIBLE DOOR INDICATOR, BLACK
- TACTILE DOOR INDICATOR, 24 x 24 BLACK BFS DET 4/AS42
- TACTILE WARNING BAND, 12 x 12 YELLOW TILE, BFS DET 5/AS42
- TILE T-1, SEE DB-A701
- TILE T-2, SEE DB-A701
- TILE T-3 (ACCENT), SEE DB-A701
- TILE T-4, SEE DB-A701
- TILE T-6, SEE DB-A701
- TILE T-7, SEE DB-A701
- TILE T-8 (ACCENT), SEE DB-A701
- EPOXY
- RESILIENT TILE FLOORING
- TACTILE GUIDE STRIP
- TILE STRIP

Santa Clara Valley Transportation Authority

____NO EXCEPTIONS TAKEN (NET)
____MAKE CORRECTIONS NOTED (MCN)
____AMEND AND RESUBMIT (A/R)

Any action shown above is subject to the terms of the contract and does not relieve the Contractor of any of its obligations under the contract, including design and detailing.

Contract No.: DB11002F

By: _____ Date: _____

8' 0' 8' 16'

GRAPHIC SCALE

KEY PLAN

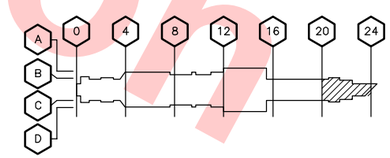

Not For Construction

REV	DATE	BY	SUB	APP	DESCRIPTION
0	20130710				READINESS FOR CONSTRUCTION

DESIGNED BY S. DEBNATH
DRAWN BY R. COLLADO
CHECKED BY E. BALLADA
IN CHARGE R. BARLAAN
DATE 20130710

LICENSED ARCHITECT SOMESH DEBNATH No. C21523 STATE OF CALIFORNIA

Skanska Shimmick Herzog
1436 California Circle
Milpitas, California 95035
A Joint Venture

Anil Verma Associates, Inc.
1970 Broadway, Suite 325 Oakland, CA 94612
Phone: (510) 535-2537 Fax: (510) 535-2339

Lockwood, Andrews & Newnam, Inc. A LEO A DALY COMPANY
T·Y·LIN INTERNATIONAL

SUBMITTED

APPROVED

VTA BART SILICON VALLEY

BART SILICON VALLEY BERRYESSA EXTENSION

LINE, TRACK, STATIONS AND SYSTEMS
DESIGN UNIT 023
MILPITAS STATION
PLATFORM LEVEL
FLOOR PATTERN PLAN
SHEET 6 OF 6

CADD FILENAME C700-S-DB-A456.dwg
SIZE D | SCALE 1/8"=1'-0"
CONTRACT NO. C700 | REV. 0
AREA CODE DB | SHEET NO. A456 | PAGE NO. 0430

JosephG Jun 26, 2013 - 2:13pm G:\Current Projects\VTA-Berryessa Extension Project\Station - Milpitas\CAD\Drawings Out\13-0710 C700 Milpitas Station - RFC Submit\C700-S-DB-A456.dwg

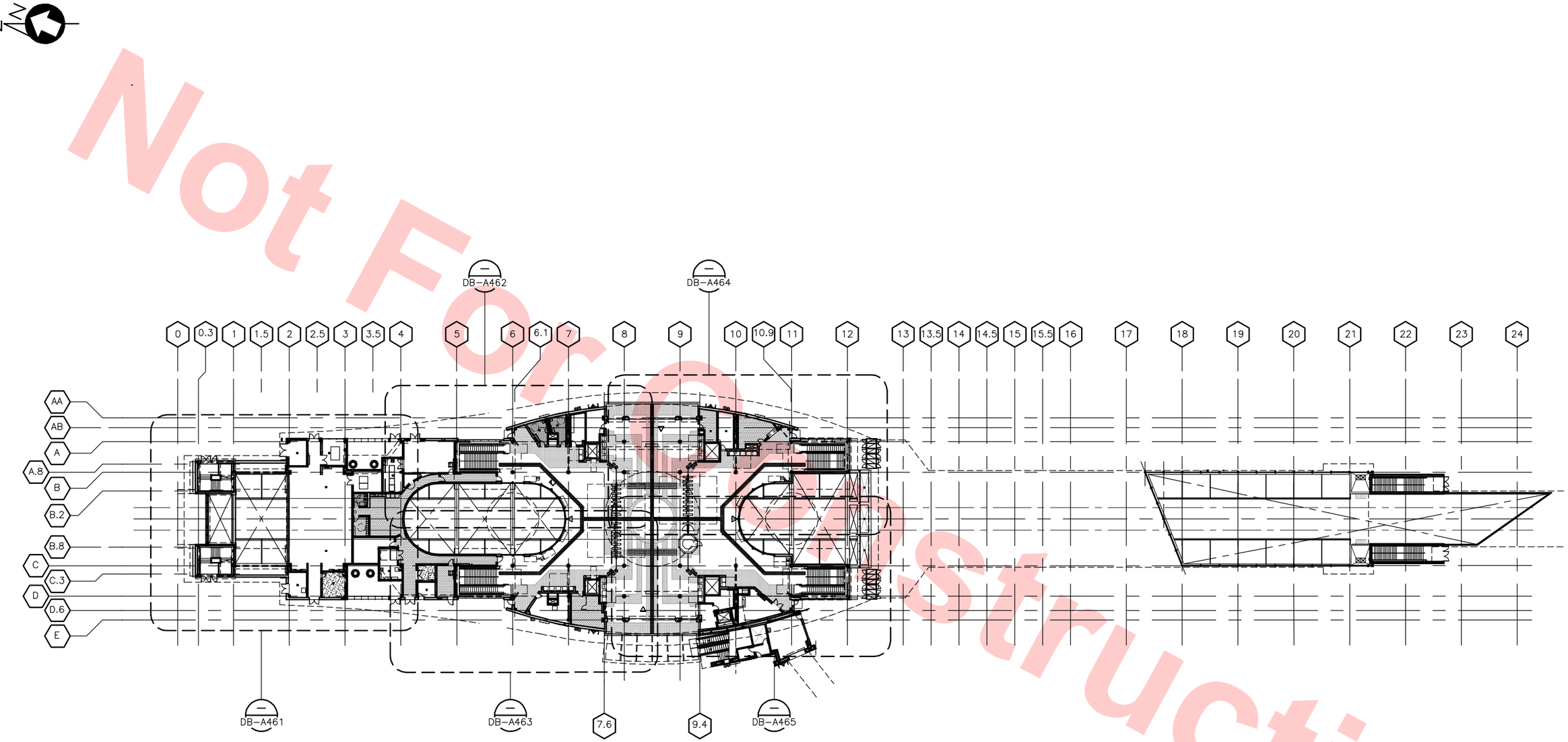

Not For Construction

KEY FLOOR PATTERN PLAN – CONCOURSE LEVEL

SCALE: 1/32"=1'–0"

Santa Clara Valley Transportation Authority

____NO EXCEPTIONS TAKEN (NET)
____MAKE CORRECTIONS NOTED (MCN)
____AMEND AND RESUBMIT (A/R)

Any action shown above is subject to the terms of the contract and does not relieve the Contractor of any of its obligations under the contract, including design and detailing.

Contract No.: DB11002F

By: _____ **Date:** _____

32' 0' 32' 64'

GRAPHIC SCALE

REV	DATE	BY	SUB	APP	DESCRIPTION
0	20130710				READINESS FOR CONSTRUCTION

DESIGNED BY S. DEBNATH
DRAWN BY R. COLLADO
CHECKED BY E. BALLADA
IN CHARGE R. BARLAAN
DATE 20130710

LICENSED ARCHITECT SAMESH DEBNATH No. C21523 STATE OF CALIFORNIA

Skanska Shimmick Herzog
1436 California Circle
Milpitas, California 95035
A Joint Venture

Anil Verma Associates, Inc.
1970 Broadway, Suite 535 Oakland, CA 94612
Phone: (510) 835-2537 Fax: (510) 535-2339

Lockwood, Andrews & Newnam, Inc. A LAN & BALL COMPANY
T·Y·LIN INTERNATIONAL

SUBMITTED _____
APPROVED _____

VTA BART SILICON VALLEY
BART SILICON VALLEY BERRYESSA EXTENSION

LINE, TRACK, STATIONS AND SYSTEMS
DESIGN UNIT 023
MILPITAS STATION
KEY PLAN
CONCOURSE LEVEL
FLOOR PATTERN PLAN

CADD FILENAME C700–S–DB–A460.dwg
SIZE D | SCALE 1/32"=1'–0"
CONTRACT NO. C700 | REV. 0
AREA CODE DB | SHEET NO. A460 | PAGE NO. 0431

JoseinG Jun 26, 2013 – 2:14pm G:\Current Projects\VTA–Berryessa Extension Project\Station – Milpitas\CAD\Drawings Out\13–0710 C700 Milpitas Station – RFC Submit\C700–S–DB–A460.dwg

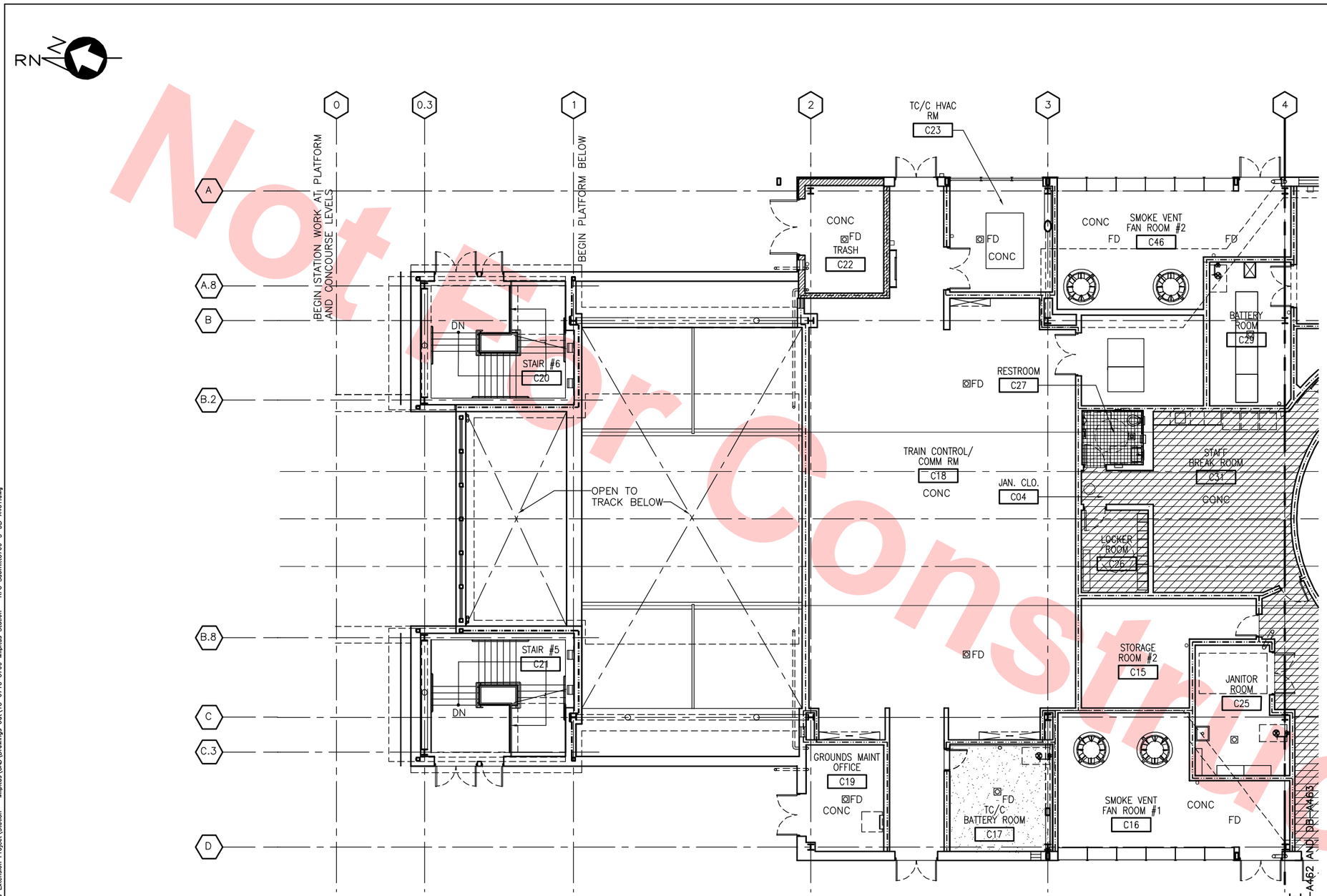

CONCOURSE LEVEL FLOOR PATTERN PLAN

SCALE: 1/8"=1'-0"

DB-A460

LEGEND

- TACTILE ACCESSIBLE DOOR INDICATOR, BLACK
- TACTILE DOOR INDICATOR, 24 x 24 BLACK BFS DET 4/AS42
- TACTILE WARNING BAND, 12 x 12 YELLOW TILE, BFS DET 5/AS42
- TILE T-1, SEE DB-A701
- TILE T-2, SEE DB-A701
- TILE T-3 (ACCENT), SEE DB-A701
- TILE T-4, SEE DB-A701
- TILE T-6, SEE DB-A701
- TILE T-7, SEE DB-A701
- TILE T-8 (ACCENT), SEE DB-A701
- EPOXY
- RESILIENT TILE FLOORING
- TACTILE GUIDE STRIP
- TILE STRIP

Santa Clara Valley Transportation Authority

____NO EXCEPTIONS TAKEN (NET)
____MAKE CORRECTIONS NOTED (MCN)
____AMEND AND RESUBMIT (A/R)

Any action shown above is subject to the terms of the contract and does not relieve the Contractor of any of its obligations under the contract, including design and detailing.

Contract No.: DB11002F

By: _____ **Date:** _____

8' 0' 8' 16'

GRAPHIC SCALE

KEY PLAN

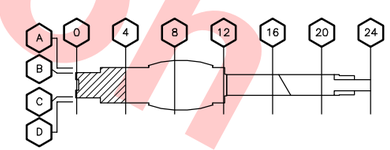

Not For Construction

REV	DATE	BY	SUB	APP	DESCRIPTION
0	20130710				READINESS FOR CONSTRUCTION

DESIGNED BY S. DEBNATH
DRAWN BY R. COLLADO
CHECKED BY E. BALLADA
IN CHARGE R. BARLAAN
DATE 20130710

LICENSED ARCHITECT SOMESH DEBNATH No. C21523 STATE OF CALIFORNIA

Skanska Shimmick Herzog
1436 California Circle
Milpitas, California 95035
A Joint Venture

Anil Verma Associates, Inc.
1970 Broadway, Suite 555 Oakland, CA 94612
Phone: (510) 835-2537 Fax: (510) 835-2339

Lockwood, Andrews & Newnam, Inc. A LAN & BALV COMPANY

T·Y·LIN INTERNATIONAL

SUBMITTED _____ APPROVED _____

VTA BART SILICON VALLEY

BART SILICON VALLEY BERRYESSA EXTENSION

LINE, TRACK, STATIONS AND SYSTEMS
DESIGN UNIT 023
MILPITAS STATION
CONCOURSE LEVEL
FLOOR PATTERN PLAN
SHEET 1 OF 5

CADD FILENAME C700-S-DB-A461.dwg
SIZE D | SCALE 1/8"=1'-0"
CONTRACT NO. C700 | REV. 0
AREA CODE DB | SHEET NO. A461 | PAGE NO. 0432

JosephG Jun 26, 2013 – 2:14pm G:\Current Projects\VTA-Berryessa Extension Project\Station – Milpitas\CAD\Drawings Out\13-0710 C700 Milpitas Station – RFC Submit\C700-S-DB-A461.dwg

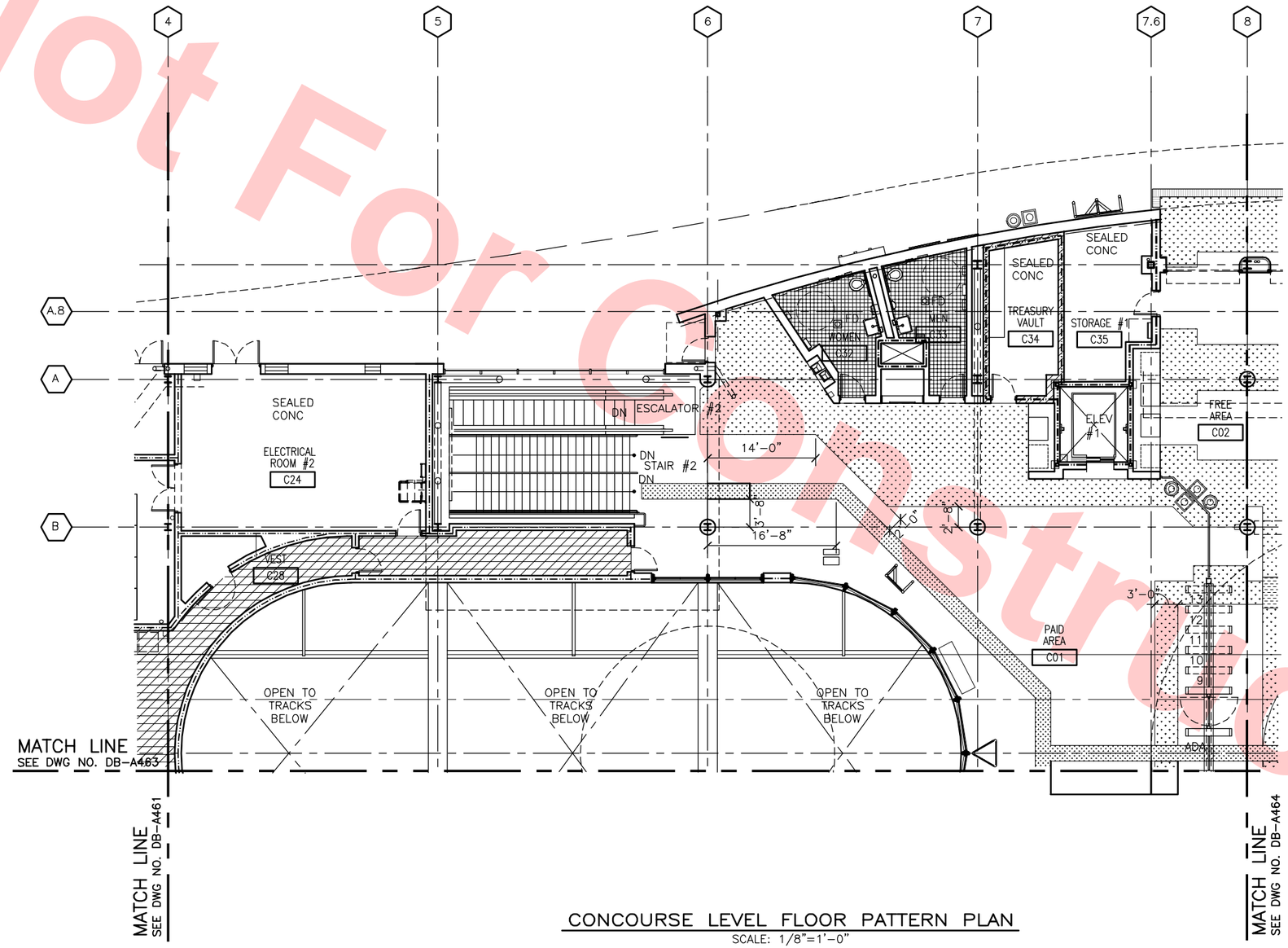

CONCOURSE LEVEL FLOOR PATTERN PLAN

SCALE: 1/8"=1'-0"

DB-A460

LEGEND

- TACTILE ACCESSIBLE DOOR INDICATOR, BLACK
- TACTILE DOOR INDICATOR, 24 x 24 BLACK BFS DET 4/AS42
- TACTILE WARNING BAND, 12 x 12 YELLOW TILE, BFS DET 5/AS42
- TILE T-1, SEE DB-A701
- TILE T-2, SEE DB-A701
- TILE T-3 (ACCENT), SEE DB-A701
- TILE T-4, SEE DB-A701
- TILE T-6, SEE DB-A701
- TILE T-7, SEE DB-A701
- TILE T-8 (ACCENT), SEE DB-A701
- EPOXY
- RESILIENT TILE FLOORING
- TACTILE GUIDE STRIP
- TILE STRIP

Santa Clara Valley Transportation Authority

____NO EXCEPTIONS TAKEN (NET)
____MAKE CORRECTIONS NOTED (MCN)
____AMEND AND RESUBMIT (A/R)

Any action shown above is subject to the terms of the contract and does not relieve the Contractor of any of its obligations under the contract, including design and detailing.

Contract No.: DB11002F

By: _____ **Date:** _____

8' 0' 8' 16'

GRAPHIC SCALE

KEY PLAN

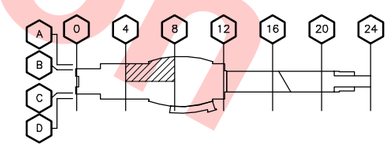

Not For Construction

REV	DATE	BY	SUB	APP	DESCRIPTION
0	20130710				READINESS FOR CONSTRUCTION

DESIGNED BY S. DEBNATH
DRAWN BY R. COLLADO
CHECKED BY E. BALLADA
IN CHARGE R. BARLAAN
DATE 20130710

LICENSED ARCHITECT SOMESH DEBNATH No. C21523 STATE OF CALIFORNIA

Skanska Shimmick Herzog
1436 California Circle
Milpitas, California 95035
A Joint Venture

Anil Verma Associates, Inc.
1970 Broadway, Suite 225, Oakland, CA 94612
Phone: (510) 835-2537 Fax: (510) 835-2339

SUBMITTED

Lockwood, Andrews & Newnam, Inc. A LAN & BALY COMPANY
T·Y·LIN INTERNATIONAL

APPROVED

VTA BART SILICON VALLEY

BART SILICON VALLEY BERRYESSA EXTENSION

LINE, TRACK, STATIONS AND SYSTEMS
DESIGN UNIT 023
MILPITAS STATION
CONCOURSE LEVEL
FLOOR PATTERN PLAN
SHEET 2 OF 5

CADD FILENAME C700-S-DB-A462.dwg
SIZE D | SCALE 1/8"=1'-0"
CONTRACT NO. C700 | REV. 0
AREA CODE DB | SHEET NO. A462 | PAGE NO. 0433

JosephG Jun 26, 2013 – 2:15pm G:\Current Projects\VTA-Berryessa Extension Project\Station – Milpitas\CAD\Drawings Out\13-0710 C700 Milpitas Station – RFC Submittal\C700-S-DB-A462.dwg

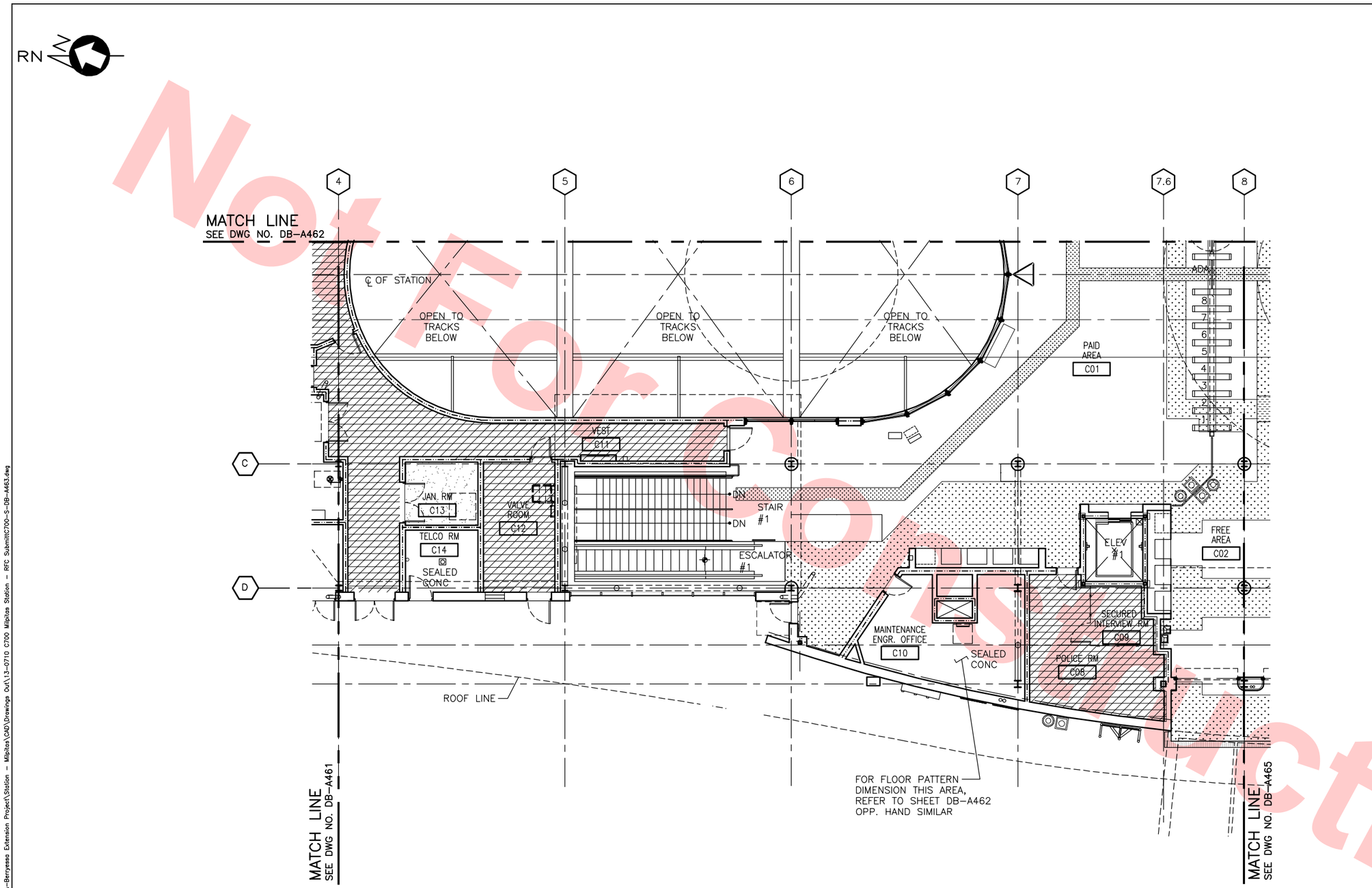

CONCOURSE LEVEL FLOOR PATTERN PLAN

SCALE: 1/8"=1'-0"

DB-A460

LEGEND

- TACTILE ACCESSIBLE DOOR INDICATOR, BLACK
- TACTILE DOOR INDICATOR, 24 x 24 BLACK BFS DET 4/AS42
- TACTILE WARNING BAND, 12 x 12 YELLOW TILE, BFS DET 5/AS42
- TILE T-1, SEE DB-A701
- TILE T-2, SEE DB-A701
- TILE T-3 (ACCENT), SEE DB-A701
- TILE T-4, SEE DB-A701
- TILE T-6, SEE DB-A701
- TILE T-7, SEE DB-A701
- TILE T-8 (ACCENT), SEE DB-A701
- EPOXY
- RESILIENT TILE FLOORING
- TACTILE GUIDE STRIP
- TILE STRIP

Santa Clara Valley Transportation Authority

____NO EXCEPTIONS TAKEN (NET)
____MAKE CORRECTIONS NOTED (MCN)
____AMEND AND RESUBMIT (A/R)

Any action shown above is subject to the terms of the contract and does not relieve the Contractor of any of its obligations under the contract, including design and detailing.

Contract No.: DB11002F

By: _____ **Date:** _____

8' 0' 8' 16'

GRAPHIC SCALE

KEY PLAN

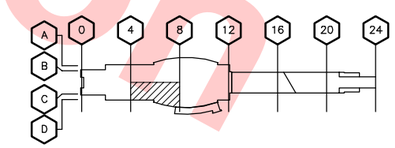

Not For Construction

REV	DATE	BY	SUB	APP	DESCRIPTION
0	20130710				READINESS FOR CONSTRUCTION

DESIGNED BY S. DEBNATH
DRAWN BY R. COLLADO
CHECKED BY E. BALLADA
IN CHARGE R. BARLAAN
DATE 20130710

LICENSED ARCHITECT SURESH DEBNATH No. C21523 STATE OF CALIFORNIA

Skanska Shimmick Herzog
1436 California Circle
Milpitas, California 95035
A Joint Venture

Anil Verma Associates, Inc.
1970 Broadway, Suite 525, Oakland, CA 94612
Phone: (510) 835-2537 Fax: (510) 835-2339

Lockwood, Andrews & Newnam, Inc. A LEO A DALY COMPANY

T·Y·LIN INTERNATIONAL

SUBMITTED _____ APPROVED _____

VTA BART SILICON VALLEY

BART SILICON VALLEY BERRYESSA EXTENSION

LINE, TRACK, STATIONS AND SYSTEMS
DESIGN UNIT 023
MILPITAS STATION
CONCOURSE LEVEL
FLOOR PATTERN PLAN
SHEET 3 OF 5

CADD FILENAME C700-S-DB-A463.dwg
SIZE D | SCALE 1/8"=1'-0"
CONTRACT NO. C700 | REV. 0
AREA CODE DB | SHEET NO. A463 | PAGE NO. 0434

JosephG Jun 26, 2013 - 2:15pm G:\Current Projects\VTA-Berryessa Extension Project\Station - Milpitas\CAD\Drawings Out\13-0710 C700 Milpitas Station - RFC Submit\C700-S-DB-A463.dwg

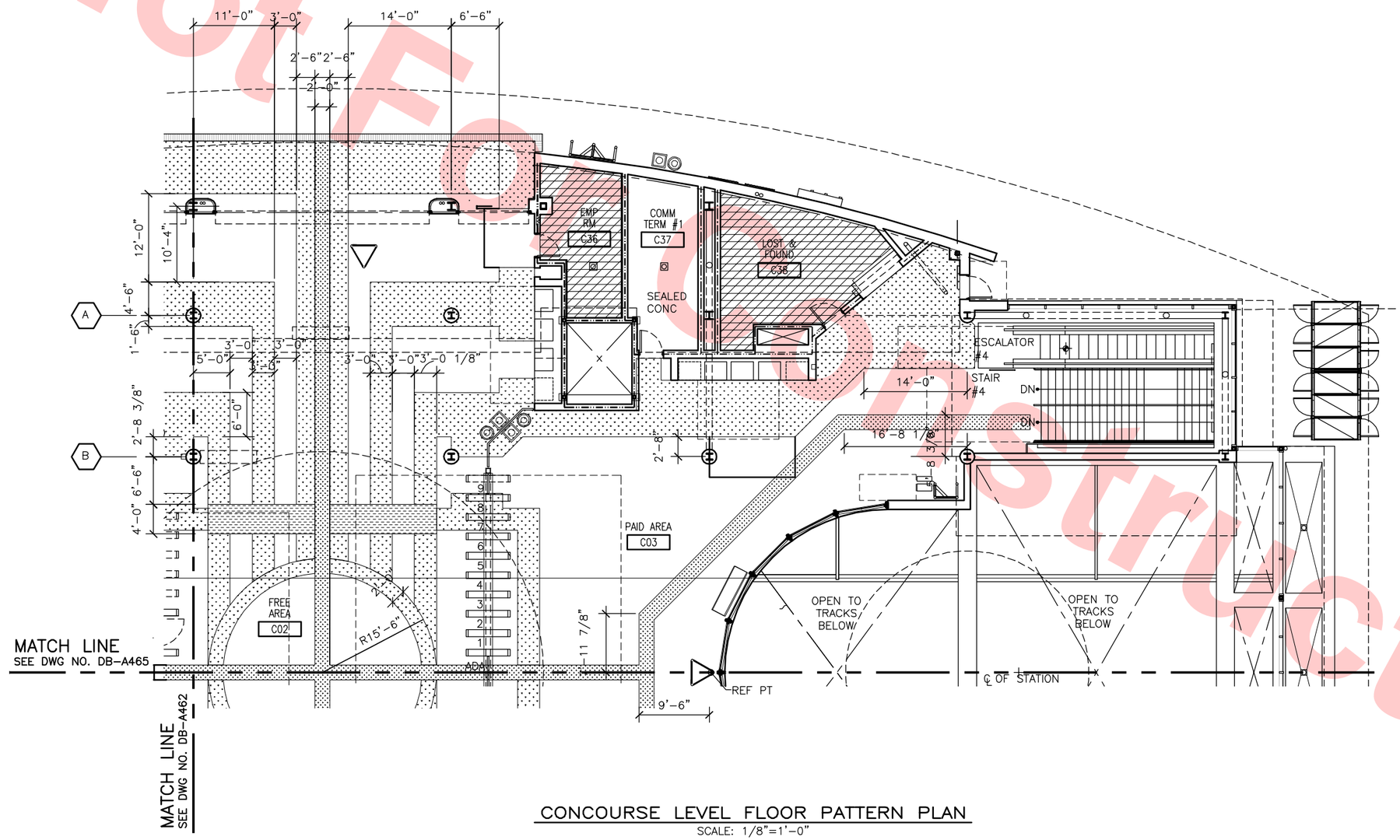

CONCOURSE LEVEL FLOOR PATTERN PLAN

SCALE: 1/8"=1'-0"

DB-A460

LEGEND

- TACTILE ACCESSIBLE DOOR INDICATOR, BLACK
- TACTILE DOOR INDICATOR, 24 x 24 BLACK BFS DET 4/AS42
- TACTILE WARNING BAND, 12 x 12 YELLOW TILE, BFS DET 5/AS42
- TILE T-1, SEE DB-A701
- TILE T-2, SEE DB-A701
- TILE T-3 (ACCENT), SEE DB-A701
- TILE T-4, SEE DB-A701
- TILE T-6, SEE DB-A701
- TILE T-7, SEE DB-A701
- TILE T-8 (ACCENT), SEE DB-A701
- EPOXY
- RESILIENT TILE FLOORING
- TACTILE GUIDE STRIP
- TILE STRIP

Santa Clara Valley Transportation Authority

____NO EXCEPTIONS TAKEN (NET)
____MAKE CORRECTIONS NOTED (MCN)
____AMEND AND RESUBMIT (A/R)

Any action shown above is subject to the terms of the contract and does not relieve the Contractor of any of its obligations under the contract, including design and detailing.

Contract No.: DB11002F

By: _____ **Date:** _____

8' 0' 8' 16'

GRAPHIC SCALE

KEY PLAN

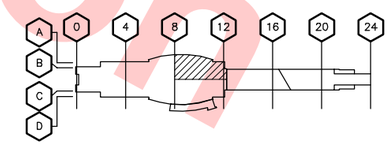

REV	DATE	BY	SUB	APP	DESCRIPTION
0	20130710				READINESS FOR CONSTRUCTION

DESIGNED BY S. DEBNATH
DRAWN BY R. COLLADO
CHECKED BY E. BALLADA
IN CHARGE R. BARLAAN
DATE 20130710

LICENSED ARCHITECT SOMESH DEBNATH No. C21523 STATE OF CALIFORNIA

Skanska Shimmick Herzog
1436 California Circle
Milpitas, California 95035
A Joint Venture

Anil Verma Associates, Inc.
1970 Broadway, Suite 325, Oakland, CA 94612
Phone: (510) 835-2537 Fax: (510) 535-2339

SUBMITTED _____

Lockwood, Andrews & Newnam, Inc. A LEO A DALY COMPANY
T·Y·LIN INTERNATIONAL

APPROVED _____

VTA BART SILICON VALLEY

BART SILICON VALLEY BERRYESSA EXTENSION

LINE, TRACK, STATIONS AND SYSTEMS
DESIGN UNIT 023
MILPITAS STATION
CONCOURSE LEVEL
FLOOR PATTERN PLAN
SHEET 4 OF 5

CADD FILENAME C700-S-DB-A464.dwg
SIZE D | SCALE 1/8"=1'-0"
CONTRACT NO. C700 | REV. 0
AREA CODE DB | SHEET NO. A464 | PAGE NO. 0435

Not For Construction

JosephG Jun 26, 2013 - 2:16pm G:\Current Projects\VTA-Berryessa Extension Project\Station - Milpitas\CAD\Drawings Out\13-0710 C700 Milpitas Station - RFC Submit\C700-S-DB-A464.dwg

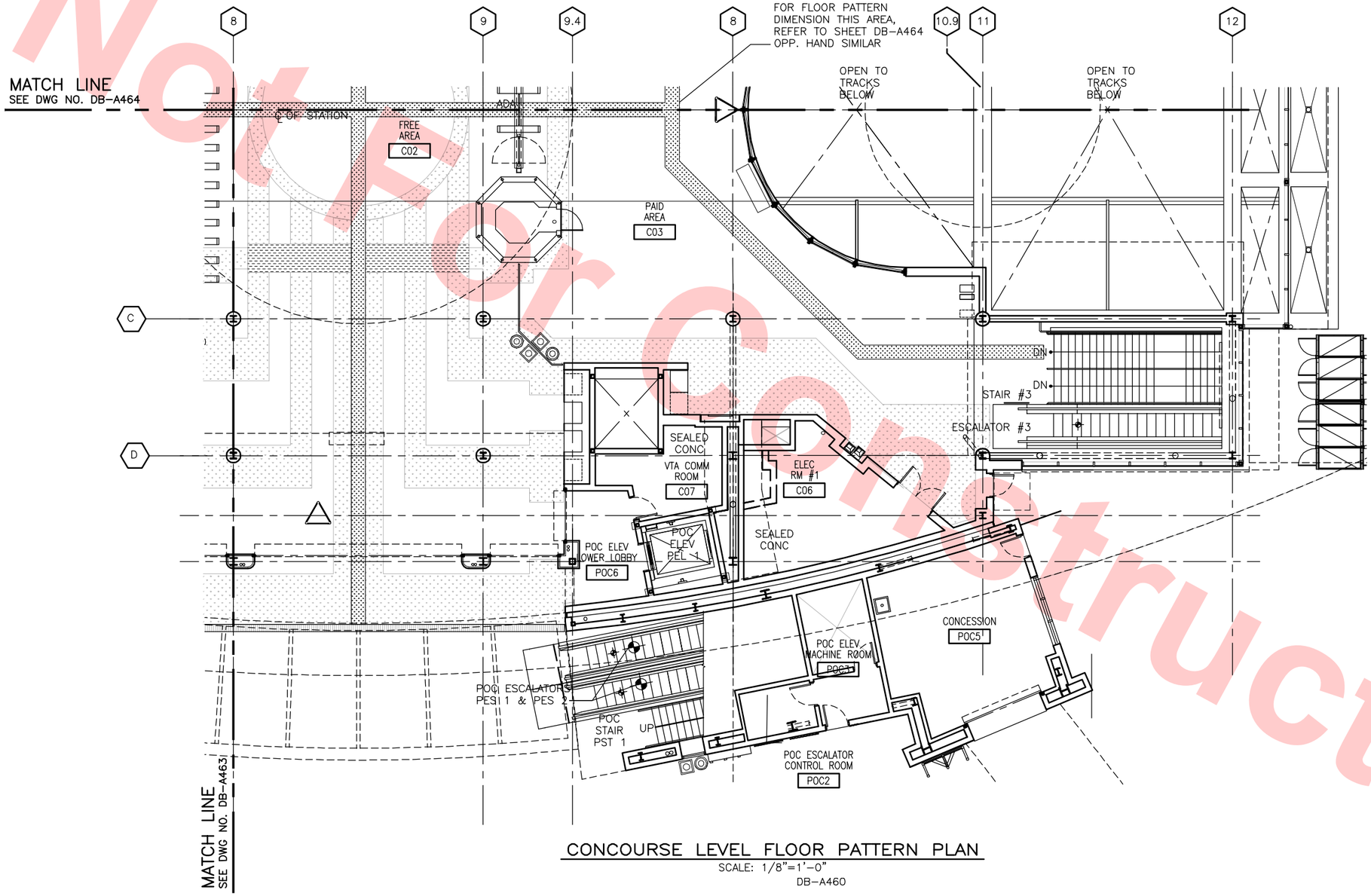

CONCOURSE LEVEL FLOOR PATTERN PLAN

SCALE: 1/8"=1'-0"

DB-A460

LEGEND

- TACTILE ACCESSIBLE DOOR INDICATOR, BLACK
- TACTILE DOOR INDICATOR, 24 x 24 BLACK BFS DET 4/AS42
- TACTILE WARNING BAND, 12 x 12 YELLOW TILE, BFS DET 5/AS42
- TILE T-1, SEE DB-A701
- TILE T-2, SEE DB-A701
- TILE T-3 (ACCENT), SEE DB-A701
- TILE T-4, SEE DB-A701
- TILE T-6, SEE DB-A701
- TILE T-7, SEE DB-A701
- TILE T-8 (ACCENT), SEE DB-A701
- EPOXY
- RESILIENT TILE FLOORING
- TACTILE GUIDE STRIP
- TILE STRIP

Santa Clara Valley Transportation Authority

____NO EXCEPTIONS TAKEN (NET)
____MAKE CORRECTIONS NOTED (MCN)
____AMEND AND RESUBMIT (A/R)

Any action shown above is subject to the terms of the contract and does not relieve the Contractor of any of its obligations under the contract, including design and detailing.

Contract No.: DB11002F

By: _____ Date: _____

8' 0' 8' 16'

GRAPHIC SCALE

KEY PLAN

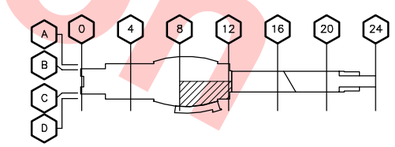

Not For Construction

REV	DATE	BY	SUB	APP	DESCRIPTION
0	20130710				READINESS FOR CONSTRUCTION

DESIGNED BY S. DEBNATH
DRAWN BY R. COLLADO
CHECKED BY E. BALLADA
IN CHARGE R. BARLAAN
DATE 20130710

LICENSED ARCHITECT SANJEEV DEBNATH No. C21523 STATE OF CALIFORNIA

Skanska Shimmick Herzog
1436 California Circle
Milpitas, California 95035
A Joint Venture

Anil Verma Associates, Inc.
1970 Broadway, Suite 525 Oakland, CA 94612
Phone: (510) 835-2537 Fax: (510) 835-2339

SUBMITTED

Lockwood, Andrews & Newnam, Inc. A CH2M HILL COMPANY
T·Y·LIN INTERNATIONAL

APPROVED

VTA BART SILICON VALLEY

BART SILICON VALLEY BERRYESSA EXTENSION

LINE, TRACK, STATIONS AND SYSTEMS
DESIGN UNIT 023
MILPITAS STATION
CONCOURSE LEVEL
FLOOR PATTERN PLAN
SHEET 5 OF 5

CADD FILENAME C700-S-DB-A465.dwg
SIZE D | SCALE 1/8"=1'-0"
CONTRACT NO. C700 | REV. 0
AREA CODE DB | SHEET NO. A465 | PAGE NO. 0436

Joseph G Jul 02, 2013 - 2:12pm G:\Current Projects\VTA-Berryessa Extension Project\Station - Milpitas\CAD\Drawings Out\13-0710 C700 Milpitas Station - RFC Submittl\C700-S-DB-A465.dwg

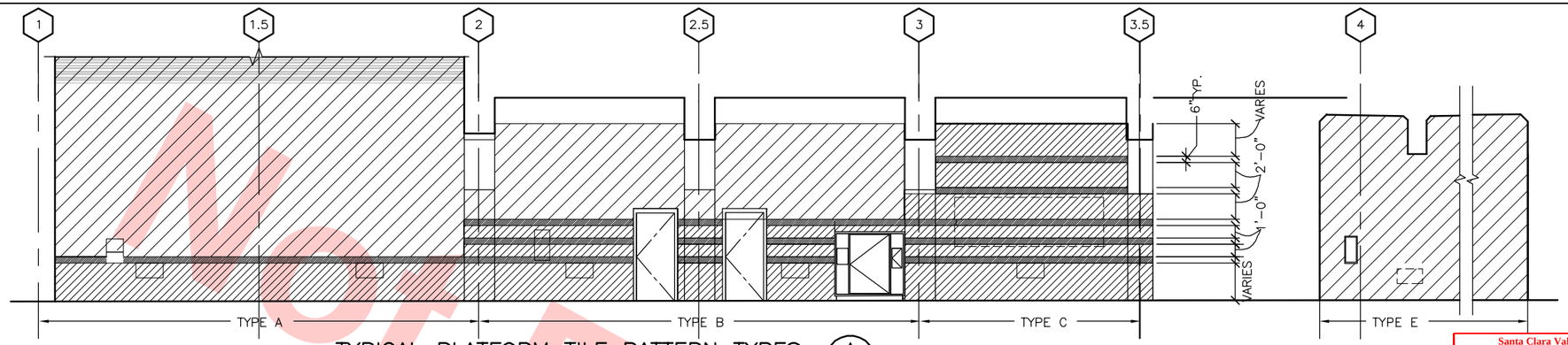

TYPICAL PLATFORM TILE PATTERN TYPES (A / DB-A501)

SCALE: 3/16"=1'-0"

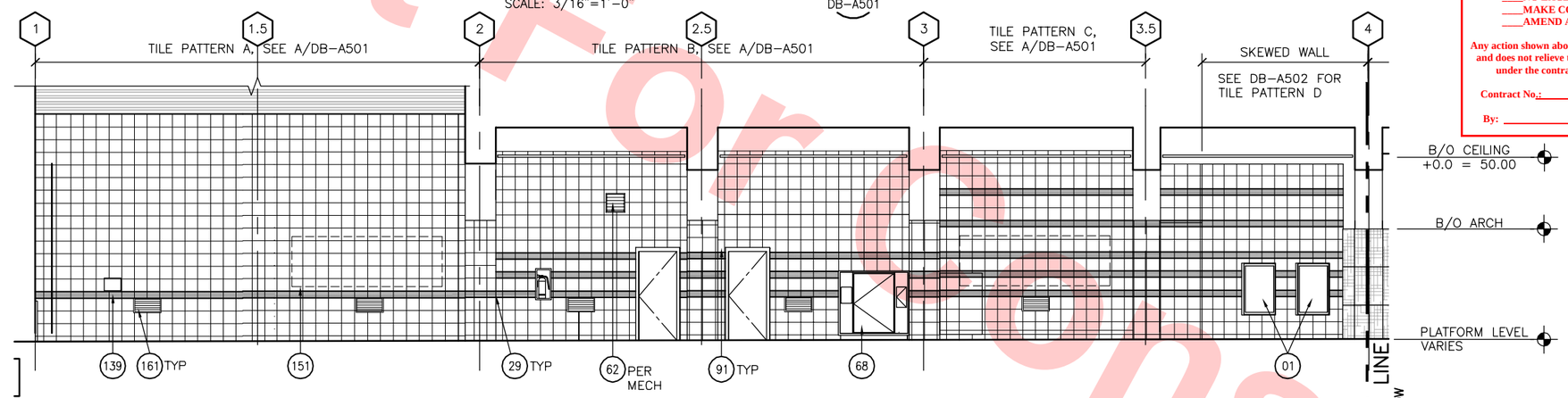

ELEVATION – EAST WALL (WEST WALL OH) (B / DB-A501)

PLATFORM GRID LINE 1–4

SCALE: 3/16" = 1'-0"

DB-A111X

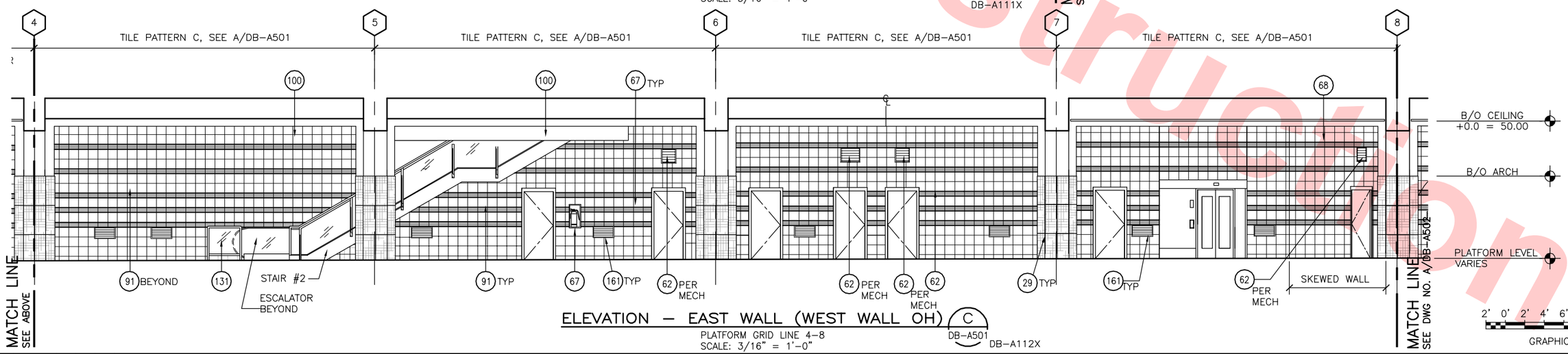

ELEVATION – EAST WALL (WEST WALL OH) (C / DB-A501)

PLATFORM GRID LINE 4–8

SCALE: 3/16" = 1'-0"

DB-A112X

2' 0' 2' 4' 6' 8' 10' 12' 14'

GRAPHIC SCALE

KEY NOTES

01	MAP CASE – WALL-MOUNTED, BFS DET 4/AS83
29	STRUCTURAL COLUMN
62	LOUVER
67	FIRE EXTINGUISHER CABINET – SEE FIRE PROTECTION DRAWINGS
68	FIRE HOSE CABINET – SEE FIRE PROTECTION DRAWINGS AND BFS SHEETS AS65–AS67
91	TILE – OFCI
100	SMOKE DRAFT STOP
131	GLASS BARRIER
139	PABX AND EMERGENCY TELEPHONE LOCKED BOX, SEE COMM DRAWINGS
151	ADVERTISEMENT FRAME SPACE
161	LOW WALL VENT

TILE LEGEND

- TILE T–9
- TILE T–10
- TILE T–11
- TILE T–12
- ART TILE

NOTE

SEE SHEET DB–A701 FOR TYPE

Santa Clara Valley Transportation Authority

____NO EXCEPTIONS TAKEN (NET)
____MAKE CORRECTIONS NOTED (MCN)
____AMEND AND RESUBMIT (A/R)

Any action shown above is subject to the terms of the contract and does not relieve the Contractor of any of its obligations under the contract, including design and detailing.

Contract No.: DB11002F

By: _____ Date: _____

Not For Construction

REV	DATE	BY	SUB	APP	DESCRIPTION
0	20130710				READINESS FOR CONSTRUCTION

DESIGNED BY S. DEBNATH
DRAWN BY R. COLLADO
CHECKED BY E. BALLADA
IN CHARGE R. BARLAAN
DATE 20130710

LICENSED ARCHITECT SOMESH DEBNATH No. C21523 STATE OF CALIFORNIA

Skanska Shimmick Herzog
1436 California Circle
Milpitas, California 95035
A Joint Venture

Anil Verma Associates, Inc.
1970 Broadway, Suite 525, Oakland, CA 94612
Phone: (510) 835-2537 Fax: (510) 535-2339
SUBMITTED

Lockwood, Andrews & Newnam, Inc. A LAN & BAYA COMPANY
T·Y·LIN INTERNATIONAL
APPROVED

VTA BART SILICON VALLEY
BART SILICON VALLEY BERRYESSA EXTENSION

LINE, TRACK, STATIONS AND SYSTEMS
DESIGN UNIT 023
MILPITAS STATION
PLATFORM LEVEL
INTERIOR ELEVATIONS
SHEET 1 OF 5

CADD FILENAME C700–S–DB–A501.dwg
SIZE D | SCALE 3/16"=1'-0"
CONTRACT NO. C700 | REV. 0
AREA CODE DB | SHEET NO. A501 | PAGE NO. 0437

JosephG Jun 26, 2013 – 2:17pm G:\Current Projects\VTA–Berryessa Extension Project\Station – Milpitas\CAD\Drawings Out\13–0710 C700 Milpitas Station – RFC Submit\C700–S–DB–A501.dwg

Not For Construction

TILE LEGEND

- TILE T–9
- TILE T–10
- TILE T–11
- TILE T–12
- TILE T–13
- ART TILE

KEY NOTES

01	MAP CASE – WALL–MOUNTED, BFS DET 4/AS83
06	BENCH
19	PUBLIC PAY PHONE(S)
20	PLATFORM TRIP STATION, SEE SYSTEMS DWGS
29	STRUCTURAL COLUMN
62	LOUVER
67	FIRE EXTINGUISHER CABINET – SEE FIRE PROTECTION DRAWINGS
68	FIRE HOSE CABINET – SEE FIRE PROTECTION DRAWINGS
91	TILE – OFCI
100	SMOKE DRAFT STOP
115	CONTROL JOINT
131	GLASS BARRIER
139	PABX AND EMERGENCY TELEPHONE LOCKED BOX, SEE COMM DRAWINGS
140	FIRE TELEPHONE LOCKED BOX, SEE COMM DRAWINGS
151	ADVERTISEMENT FRAME SPACE
161	LOW WALL VENT

NOTE

SEE SHEET DB–A701 FOR TYPE

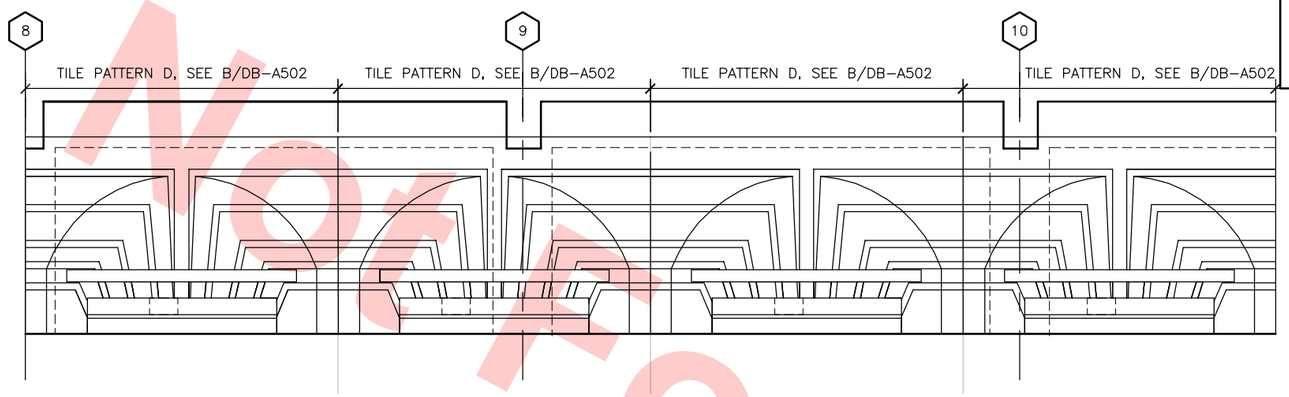

CENTER PLATFORM TILE PATTERN AT GRID LINE A AND D (A) DB–A502
SCALE: 3/16"=1'–0"

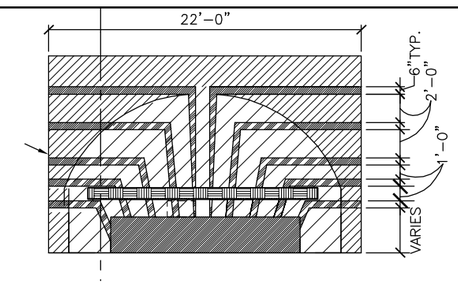

TILE PATTERN D (B) DB–A502
SCALE: 3/16"=1'–0"

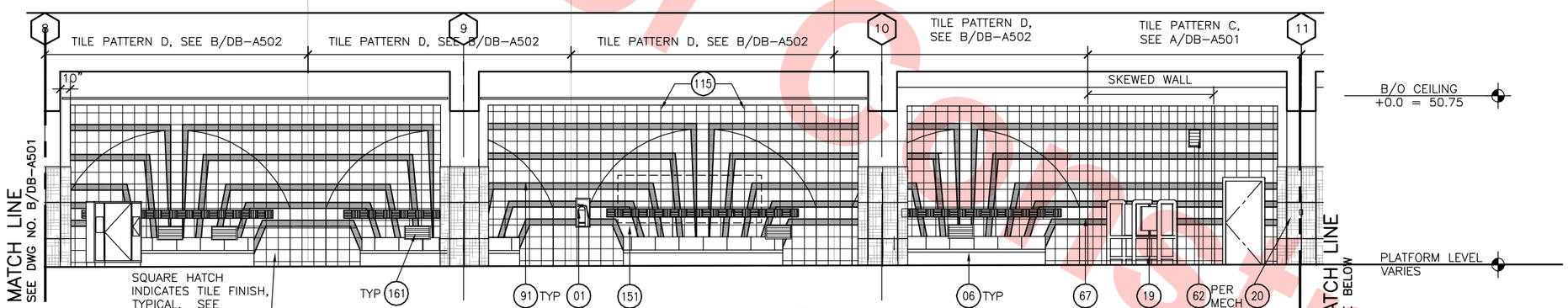

ELEVATION – EAST WALL (WEST WALL OH) (C) DB–A502
PLATFORM GRID LINE 8–11
SCALE: 3/16" = 1' 0"
DB–A113X

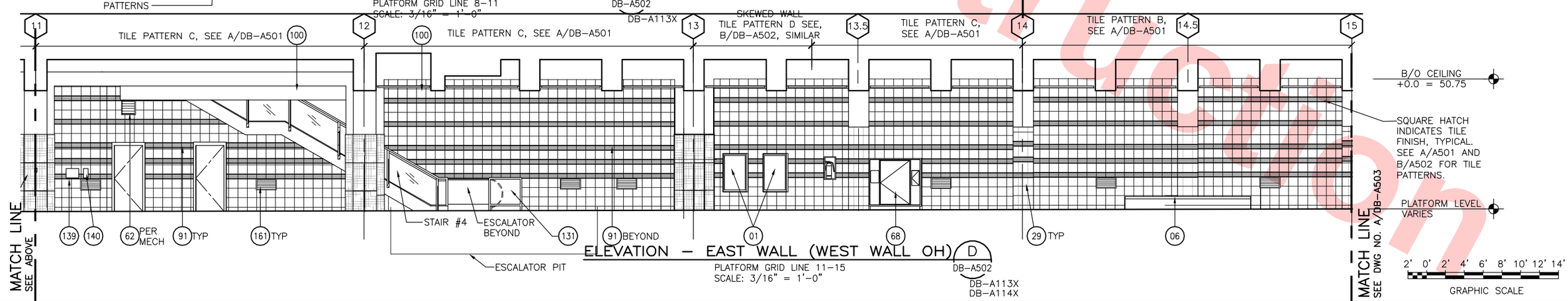

ELEVATION – EAST WALL (WEST WALL OH) (D) DB–A502
PLATFORM GRID LINE 11–15
SCALE: 3/16" = 1'–0"
DB–A113X
DB–A114X

Santa Clara Valley Transportation Authority

____NO EXCEPTIONS TAKEN (NET)
____MAKE CORRECTIONS NOTED (MCN)
____AMEND AND RESUBMIT (A/R)

Any action shown above is subject to the terms of the contract and does not relieve the Contractor of any of its obligations under the contract, including design and detailing.

Contract No.: DB11002F

By: _____ **Date:** _____

REV	DATE	BY	SUB	APP	DESCRIPTION
0	20130710				READINESS FOR CONSTRUCTION

DESIGNED BY S. DEBNATH
DRAWN BY R. COLLADO
CHECKED BY E. BALLADA
IN CHARGE R. BARLAAN
DATE 20130710

LICENSED ARCHITECT SUHESH DEBNATH No. C21523 STATE OF CALIFORNIA

Skanska Shimmick Herzog
1436 California Circle
Milpitas, California 95035
A Joint Venture

Anil Verma Associates, Inc.
1970 Broadway, Suite 525, Oakland, CA 94612
Phone: (510) 835-2532 Fax: (510) 835-2339
SUBMITTED

Lockwood, Andrews & Newnam, Inc. A LEO A DALY COMPANY
T·Y·LIN INTERNATIONAL
APPROVED

VTA BART SILICON VALLEY
BART SILICON VALLEY BERRYESSA EXTENSION

LINE, TRACK, STATIONS AND SYSTEMS
DESIGN UNIT 023
MILPITAS STATION
PLATFORM LEVEL
INTERIOR ELEVATION
SHEET 2 OF 5

CADD FILENAME C700–S–DB–A502.dwg
SIZE D | SCALE 3/16"=1'–0"
CONTRACT NO. C700 | REV. 0
AREA CODE DB | SHEET NO. A502 | PAGE NO. 0438

JosephG Jun 26, 2013 – 2:18pm G:\Current Projects\VTA–Berryessa Extension Project\Station – Milpitas\CAD\Drawings Out\13–0710 C700 Milpitas Station – RFC Submit\C700–S–DB–A502.dwg

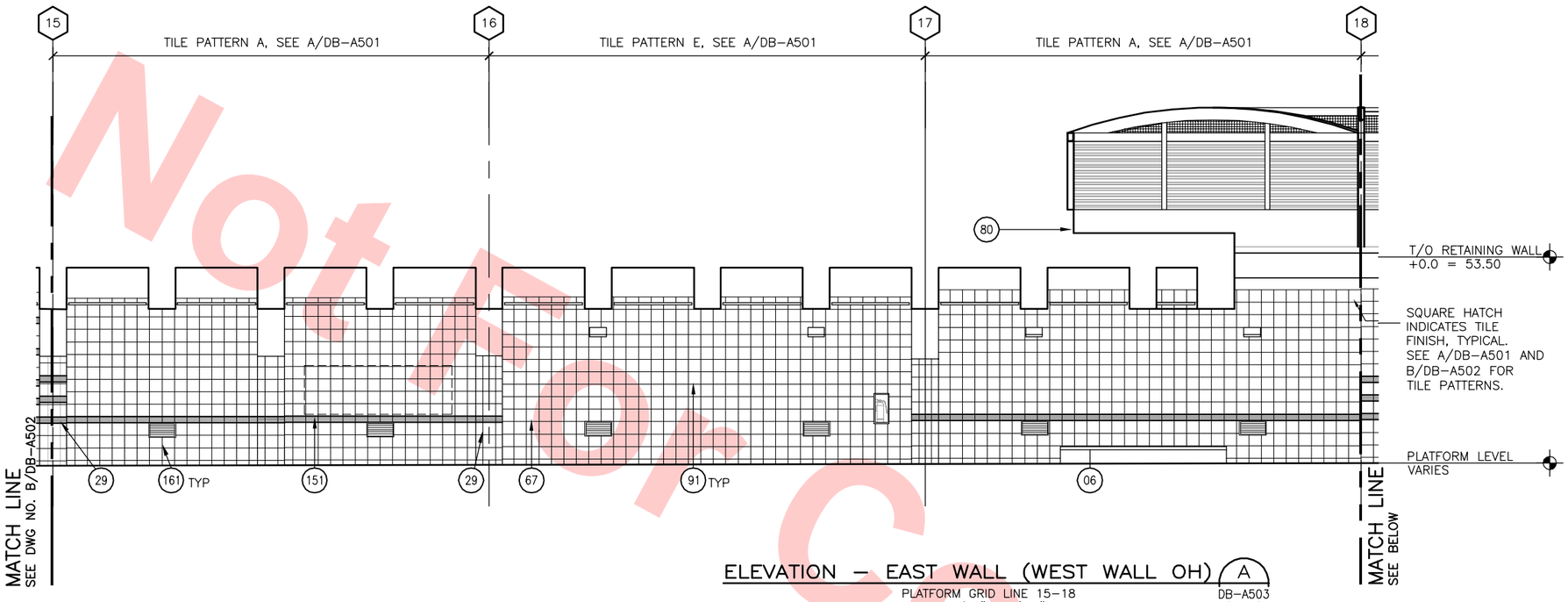

ELEVATION – EAST WALL (WEST WALL OH) (A) DB-A503

PLATFORM GRID LINE 15–18
SCALE: 3/16" = 1'-0"

DB-A114X
DB-A115X

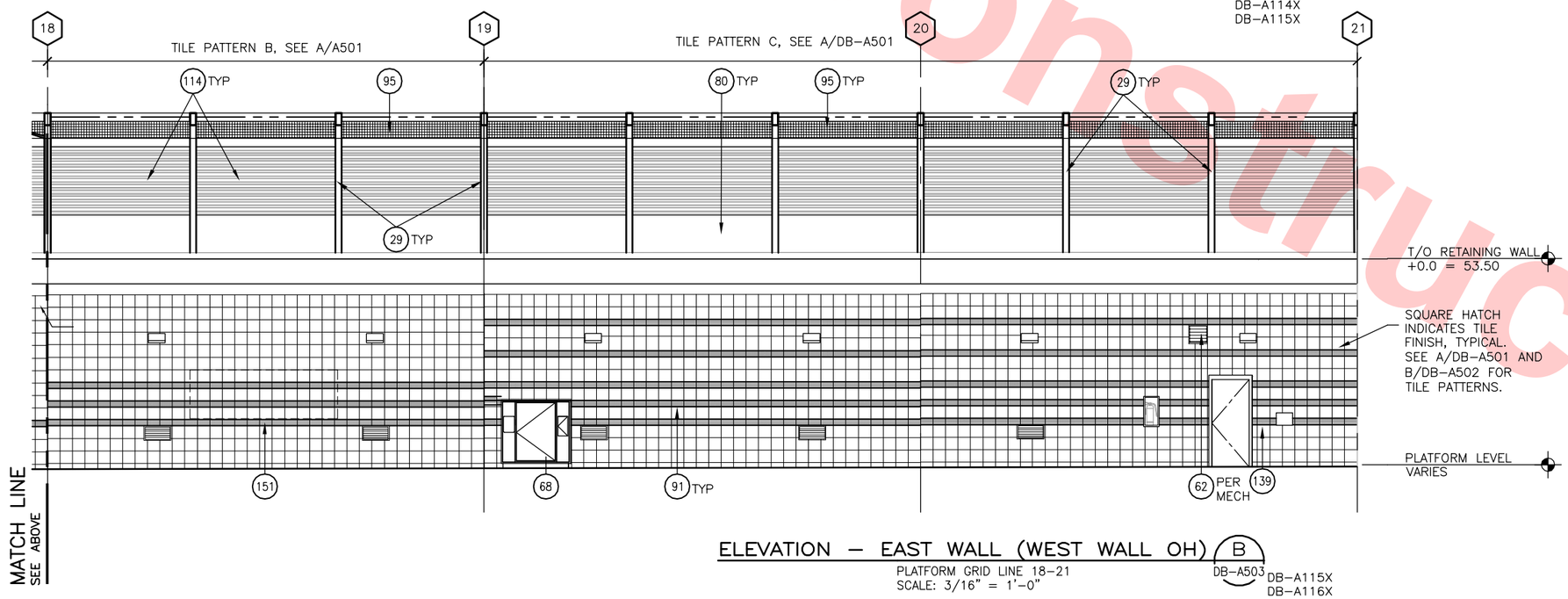

ELEVATION – EAST WALL (WEST WALL OH) (B) DB-A503

PLATFORM GRID LINE 18–21
SCALE: 3/16" = 1'-0"

DB-A115X
DB-A116X

KEY NOTES

- 06 BENCH
- 29 STRUCTURAL COLUMN
- 62 LOUVER
- 67 FIRE EXTINGUISHER CABINET – SEE FIRE PROTECTION DRAWINGS
- 68 FIRE HOSE CABINET – SEE FIRE PROTECTION DRAWINGS
- 80 PRE-CAST ARCHITECTURAL CONCRETE WALL PANEL
- 91 TILE – OFCI
- 95 BIRD SAFETY NETTING
- 114 METAL WALL PANEL – TYPE 2
- 139 PABX AND EMERGENCY TELEPHONE LOCKED BOX, SEE COMM DRAWINGS
- 151 ADVERTISEMENT FRAME SPACE
- 161 LOW WALL VENT

Santa Clara Valley Transportation Authority

____NO EXCEPTIONS TAKEN (NET)
____MAKE CORRECTIONS NOTED (MCN)
____AMEND AND RESUBMIT (A/R)

Any action shown above is subject to the terms of the contract and does not relieve the Contractor of any of its obligations under the contract, including design and detailing.

Contract No.: DB11002F

By: _____ Date: _____

2' 0' 2' 4' 6' 8' 10' 12' 14'
GRAPHIC SCALE

Not For Construction

REV	DATE	BY	SUB	APP	DESCRIPTION
0	20130710				READINESS FOR CONSTRUCTION

DESIGNED BY S. DEBNATH
DRAWN BY R. COLLADO
CHECKED BY E. BALLADA
IN CHARGE R. BARLAAN
DATE 20130710

LICENSED ARCHITECT SOMESH DEBNATH No. C21523 STATE OF CALIFORNIA

Skanska Shimmick Herzog
1436 California Circle
Milpitas, California 95035
A Joint Venture

Anil Verma Associates, Inc.
1970 Broadway, Suite 525, Oakland, CA 94612
Phone: (510) 835-2537 Fax: (510) 535-2339
SUBMITTED

Lockwood, Andrews & Newnam, Inc. A LAN & BAYH COMPANY | T·Y·LIN INTERNATIONAL
APPROVED

VTA BART SILICON VALLEY
BART SILICON VALLEY BERRYESSA EXTENSION

LINE, TRACK, STATIONS AND SYSTEMS
DESIGN UNIT 023
MILPITAS STATION
PLATFORM LEVEL
INTERIOR ELEVATION
SHEET 3 OF 5

CADD FILENAME C700-S-DB-A503.dwg
SIZE D | SCALE 3/16"=1'-0"
CONTRACT NO. C700 | REV. 0
AREA CODE DB | SHEET NO. A503 | PAGE NO. 0439

Jun 26, 2013 – 2:19pm G:\Current Projects\VTA-Berryessa Extension Project\Station – Milpitas\CAD\Drawings Out\13-0710 C700 Milpitas Station – RFC Submitt C700-S-DB-A503.dwg
JosephG

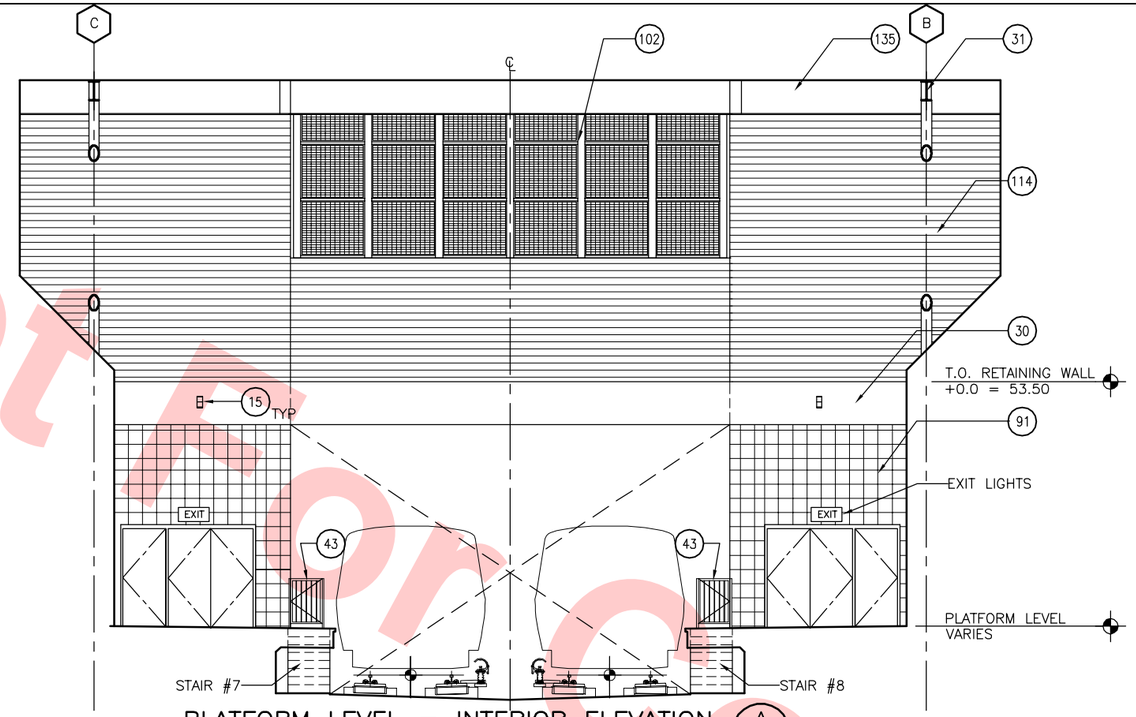

PLATFORM LEVEL – INTERIOR ELEVATION (A)

SCALE: 3/16"=1'-0"

DB-A504 DB-A091 DB-A111X DB-A121X

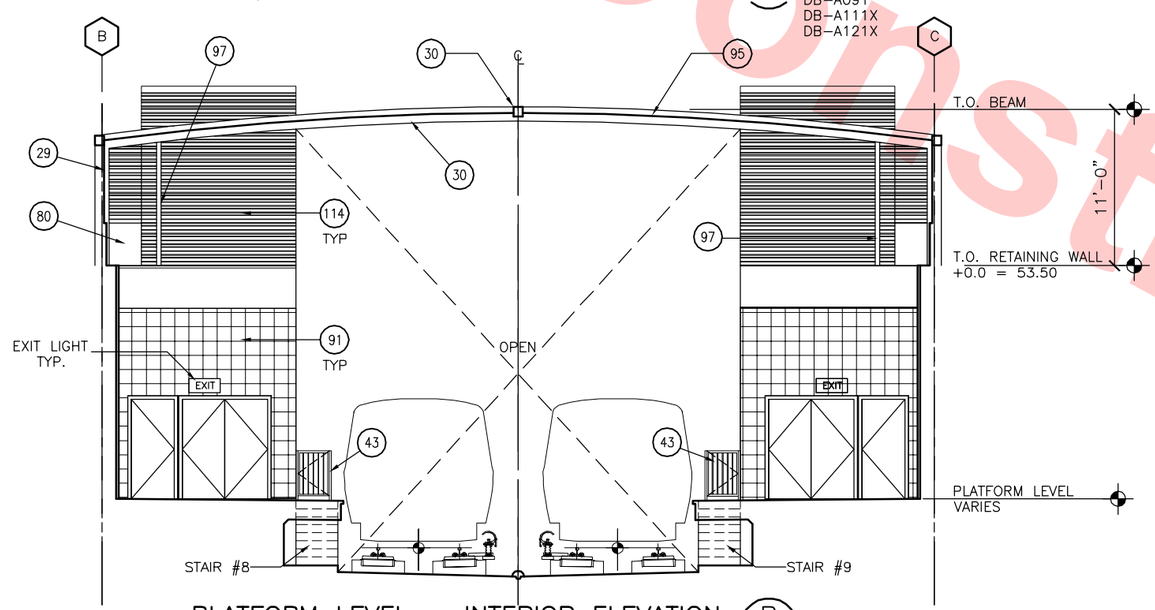

PLATFORM LEVEL – INTERIOR ELEVATION (B)

SCALE: 3/16"=1'-0"

DB-A504 DB-A096 DB-A126X

KEY NOTES

15	LIGHT FIXTURE
29	CONCRETE COLUMN
30	STRUCTURAL BEAM
31	STRUCTURAL MEMBER
43	END-OF-PLATFORM GATE, SEE BFS DET 1/AS70, SIM
80	PRECAST ARCHITECTURAL CONCRETE WALL PANEL, WP-3
91	TILE – OFCI
95	BIRD/SAFETY NETTING
97	DOWNSPOUT/RAINWATER LEADER
102	DECORATIVE S.S. MESH
114	METAL WALL PANEL – TYPE 2
135	METAL COVER

Santa Clara Valley Transportation Authority

____NO EXCEPTIONS TAKEN (NET)
____MAKE CORRECTIONS NOTED (MCN)
____AMEND AND RESUBMIT (A/R)

Any action shown above is subject to the terms of the contract and does not relieve the Contractor of any of its obligations under the contract, including design and detailing.

Contract No.: DB11002F

By: _____ Date: _____

2' 0' 2' 4' 6' 8' 10' 12' 14'

GRAPHIC SCALE

Not For Construction

REV	DATE	BY	SUB	APP	DESCRIPTION
0	20130710				READINESS FOR CONSTRUCTION

DESIGNED BY S. DEBNATH
DRAWN BY R. COLLADO
CHECKED BY E. BALLADA
IN CHARGE R. BARLAAN
DATE 20130710

LICENSED ARCHITECT SOMESH DEBNATH No. C21523 STATE OF CALIFORNIA

Skanska Shimmick Herzog
1436 California Circle
Milpitas, California 95035
A Joint Venture

Anil Verma Associates, Inc.
1970 Broadway, Suite 555, Oakland, CA 94612
Phone: (510) 835-2537 Fax: (510) 835-2339

Lockwood, Andrews & Newnam, Inc. A LAN & BALY COMPANY

T·Y·LIN INTERNATIONAL

SUBMITTED

APPROVED

VTA BART SILICON VALLEY

BART SILICON VALLEY BERRYESSA EXTENSION

LINE, TRACK, STATIONS AND SYSTEMS
DESIGN UNIT 023
MILPITAS STATION
PLATFORM LEVEL
INTERIOR ELEVATION
SHEET 4 OF 5

CADD FILENAME C700-S-DB-A504.dwg
SIZE D | SCALE 3/16"=1'-0"
CONTRACT NO. C700 | REV. 0
AREA CODE DB | SHEET NO. A504 | PAGE NO. 0440

JosephG Jun 26, 2013 – 2:19pm G:\Current Projects\VTA-Berryessa Extension Project\Station – Milpitas\CAD\Drawings Out\13-0710 C700 Milpitas Station – RFC Submit\C700-S-DB-A504.dwg

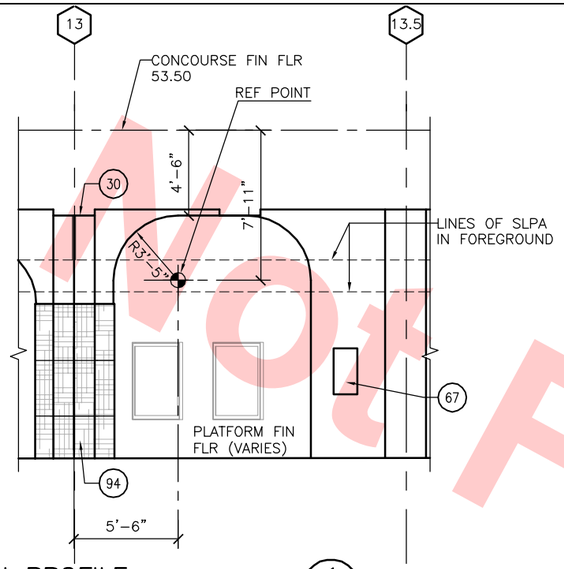

ARCH PROFILE 1

GRID LINE 13 & 13.5
SCALE: 1/4"=1'-0"

DB-A505 DB-A204

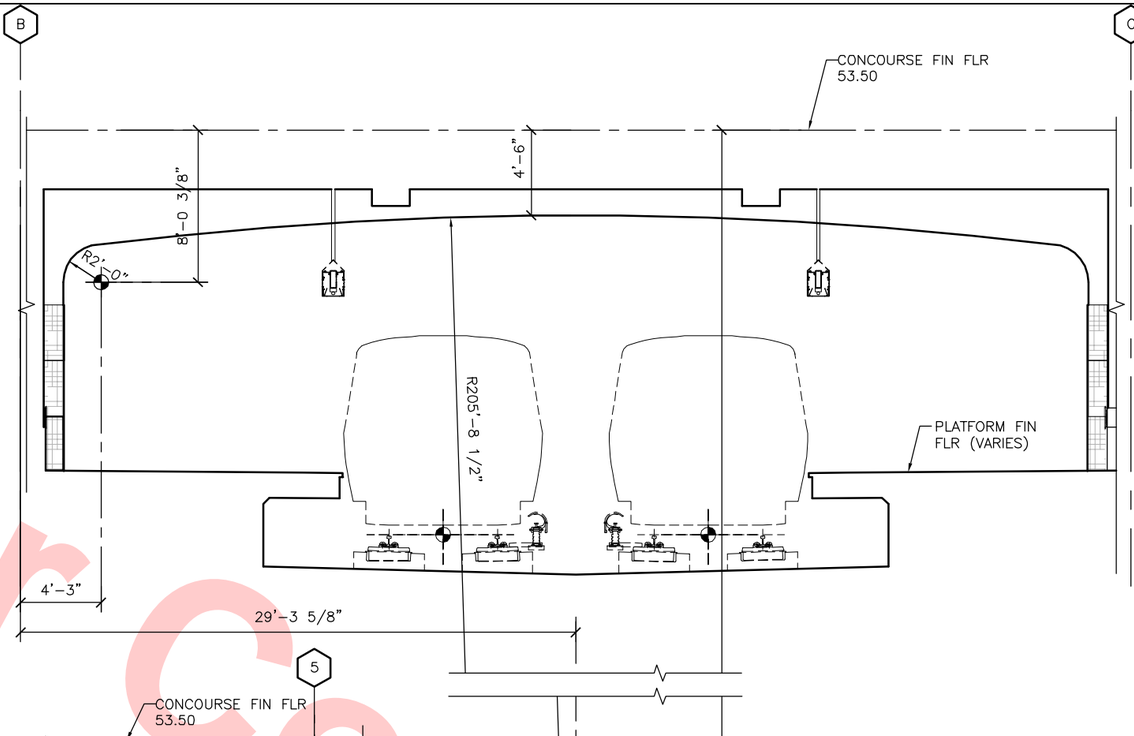

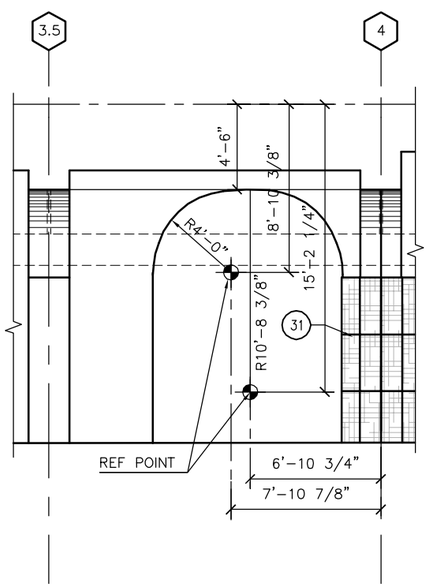

ARCH PROFILE 2

GRID LINE 3.5 & 4
SCALE: 1/4"=1'-0"

DB-A505 DB-A201

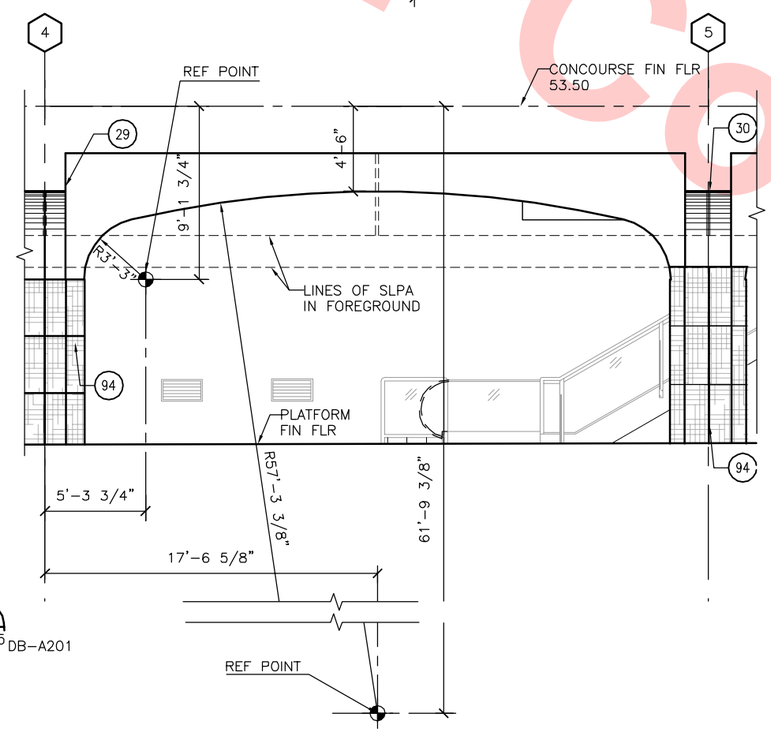

TYP. ARCH PROFILE 3

GRID LINE 4 THRU 13 (SIMILAR)
SCALE: 1/4"=1'-0"

DB-A505 DB-A202

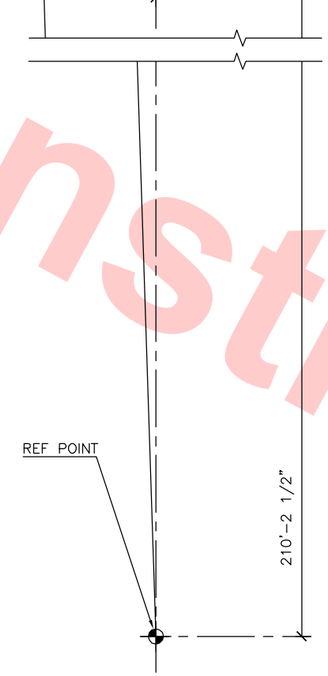

ARCH PROFILE 4

GRID LINE B & C
SCALE: 1/4"=1'-0"

DB-A505 DB-A212

KEY NOTES

29 STRUCTURAL COLUMN
30 STRUCTURAL BEAM
94 OFCI ART TILES, TYP. @ COLUMNS

Santa Clara Valley Transportation Authority

____NO EXCEPTIONS TAKEN (NET)
____MAKE CORRECTIONS NOTED (MCN)
____AMEND AND RESUBMIT (A/R)

Any action shown above is subject to the terms of the contract and does not relieve the Contractor of any of its obligations under the contract, including design and detailing.

Contract No.: DB11002F

By: _____ Date: _____

Not For Construction

REV	DATE	BY	SUB	APP	DESCRIPTION
0	20130710				READINESS FOR CONSTRUCTION

DESIGNED BY S. DEBNATH
DRAWN BY R. COLLADO
CHECKED BY E. BALLADA
IN CHARGE R. BARLAAN
DATE 20130710

LICENSED ARCHITECT SOMESH DEBNATH No. C21523 STATE OF CALIFORNIA

Skanska Shimmick Herzog
1436 California Circle
Milpitas, California 95035
A Joint Venture

Anil Verma Associates, Inc.
1970 Broadway, Suite 525 Oakland, CA 94612
Phone: (510) 835-2537 Fax: (510) 835-2339

Lockwood, Andrews & Newnam, Inc. A LEO A DALY COMPANY
T·Y·LIN INTERNATIONAL

SUBMITTED _____ APPROVED _____

VTA BART SILICON VALLEY
BART SILICON VALLEY BERRYESSA EXTENSION

LINE, TRACK, STATIONS AND SYSTEMS
DESIGN UNIT 023
MILPITAS STATION
TYPICAL ARCH PROFILES
ELEVATIONS
SHEET 5 OF 5

CADD FILENAME C700-S-DB-A505.dwg
SIZE D | SCALE 3/16"=1'-0"
CONTRACT NO. C700 | REV. 0
AREA CODE DB | SHEET NO. A505 | PAGE NO. 0441

JosephG Jun 26, 2013 – 2:20pm G:\Current Projects\VTA-Berryessa Extension Project\Station – Milpitas\CAD\Drawings Out\13-0710 C700 Milpitas Station – RFC Submitt\C700-S-DB-A505.dwg

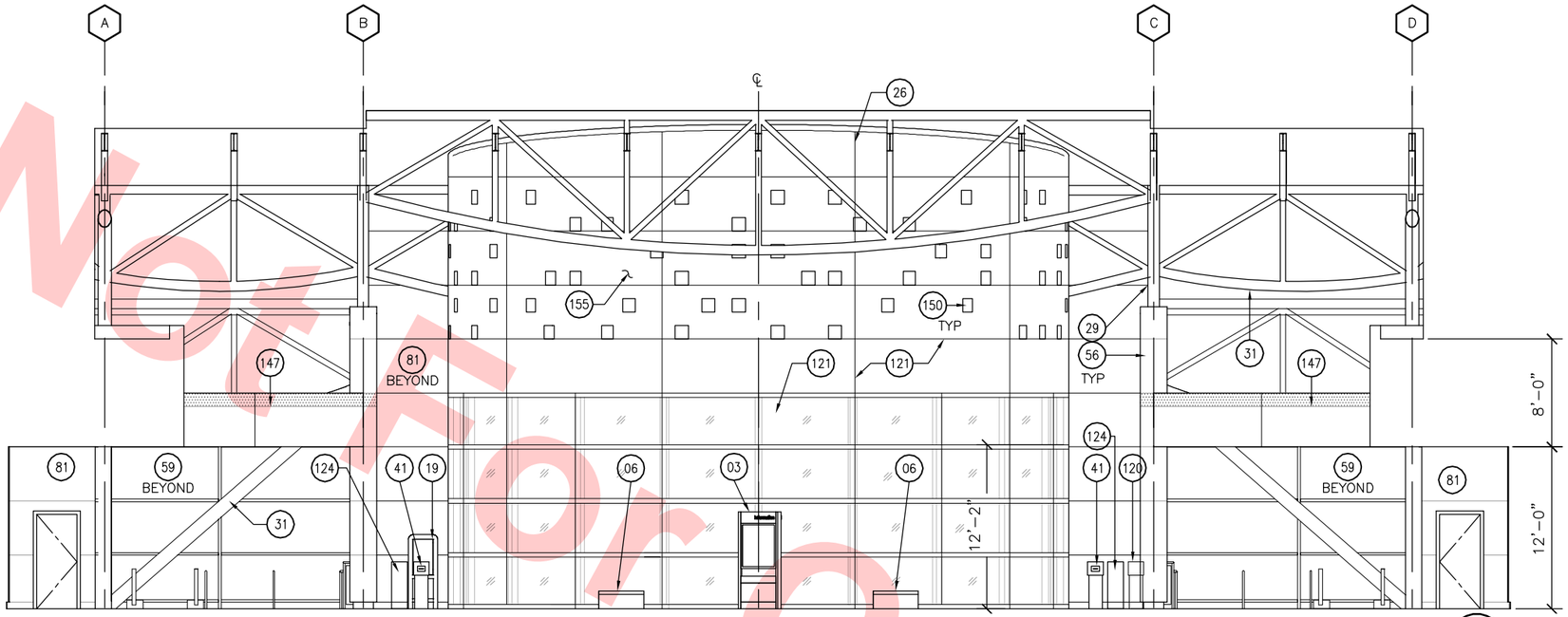

INTERIOR ELEVATIONS (A)
SCALE: 3/16"=1'-0"
DB-A512 DB-A124X DB-A125X

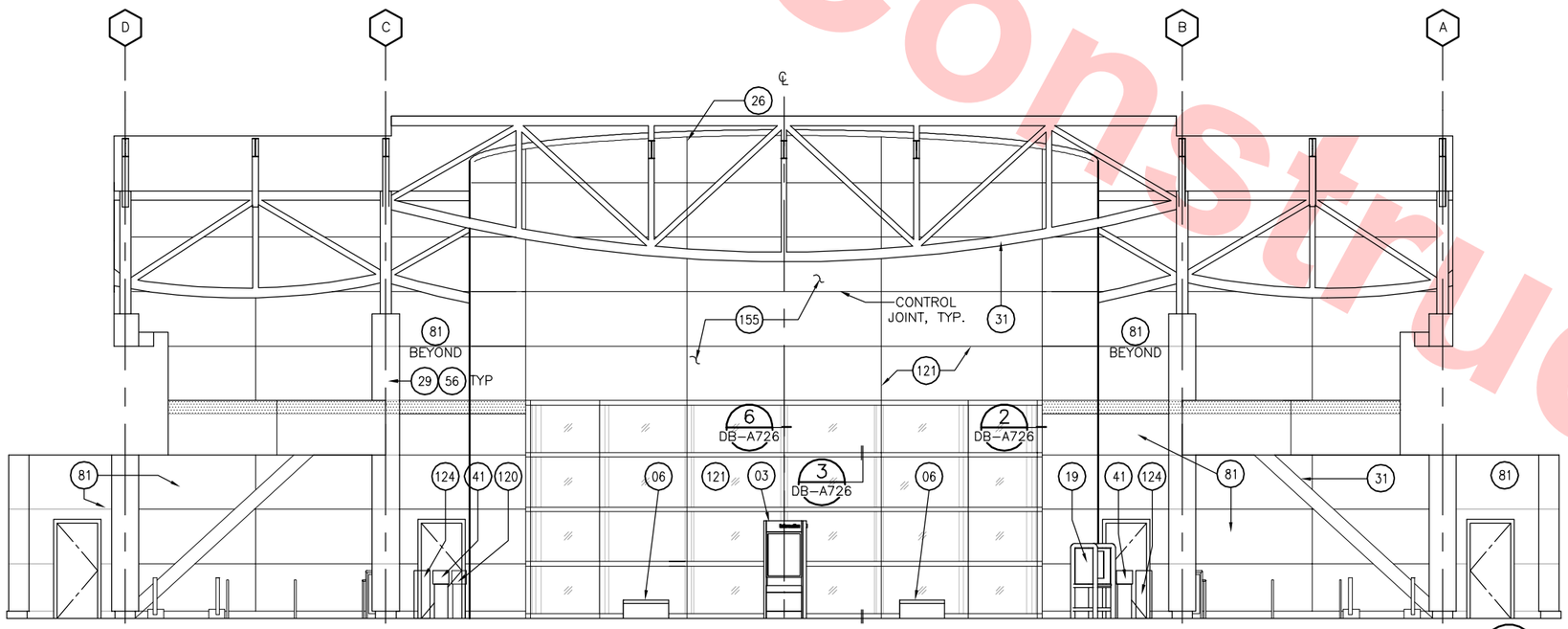

INTERIOR ELEVATIONS (B)
SCALE: 3/16"=1'-0"
DB-A512 DB-A122X DB-A123X

KEY NOTES

03	INFO KIOSK – THREE-SIDED, BFS DET 1/AS85
06	BENCH
19	PUBLIC PAY PHONE(S)
26	CEMENT PLASTER CONTROL JOINT
29	STRUCTURAL COLUMN
31	STRUCTURAL MEMBER
41	BUS TRANSFER MACHINE, PER BFS
56	METAL COLUMN COVER TO MATCH COMPOSITE WALL PANEL WP-1
59	GLASS WALL SYSTEM TYPE 3
81	COMPOSITE WALL PANEL WP-1, SEE DB-A701
120	FUTURE BTM
121	GLASS WALL SYSTEM TYPE 2
124	BUS SCHEDULE RACK
145	SMOKE CONTROL FAN AND DUCT
147	METAL PANEL ACCENT BAND WP-1A
150	INSERT: COLORED GLASS BLOCK, MIX OF 4 COLORS
155	CEMENT PLASTER FINISH, FOR C.J. LAYOUT REFER TO DETAIL 5/DB-A525

Santa Clara Valley Transportation Authority

____NO EXCEPTIONS TAKEN (NET)
____MAKE CORRECTIONS NOTED (MCN)
____AMEND AND RESUBMIT (A/R)

Any action shown above is subject to the terms of the contract and does not relieve the Contractor of any of its obligations under the contract, including design and detailing.

Contract No.: DB11002F

By: _____ Date: _____

2' 0' 2' 4' 6' 8' 10' 12' 14'
GRAPHIC SCALE

Not For Construction

REV	DATE	BY	SUB	APP	DESCRIPTION
0	20130710				READINESS FOR CONSTRUCTION

DESIGNED BY S. DEBNATH
DRAWN BY R. COLLADO
CHECKED BY E. BALLADA
IN CHARGE R. BARLAAN
DATE 20130710

LICENSED ARCHITECT SOMESH DEBNATH No. C21523 STATE OF CALIFORNIA

Skanska Shimmick Herzog
1436 California Circle
Milpitas, California 95035
A Joint Venture

Anil Verma Associates, Inc.
1970 Broadway, Suite 525, Oakland, CA 94612
Phone: (510) 835-2537 Fax: (510) 835-2339

Lockwood, Andrews & Newnam, Inc. A LAN & RAIN COMPANY
T·Y·LIN INTERNATIONAL

SUBMITTED _____
APPROVED _____

VTA BART SILICON VALLEY
BART SILICON VALLEY BERRYESSA EXTENSION

LINE, TRACK, STATIONS AND SYSTEMS
DESIGN UNIT 023
MILPITAS STATION
CONCOURSE LEVEL
INTERIOR ELEVATIONS
SHEET 1 OF 5

CADD FILENAME C700-S-DB-A512.dwg
SIZE D | SCALE 3/16"=1'-0"
CONTRACT NO. C700 | REV. 0
AREA CODE DB | SHEET NO. A512 | PAGE NO. 0442

Jun 26, 2013 – 2:21pm G:\Current Projects\VTA-Berryessa Extension Project\Station – Milpitas\CAD\Drawings Out\13-0710 C700 Milpitas Station – RFC Submit\C700-S-DB-A512.dwg
JosephG

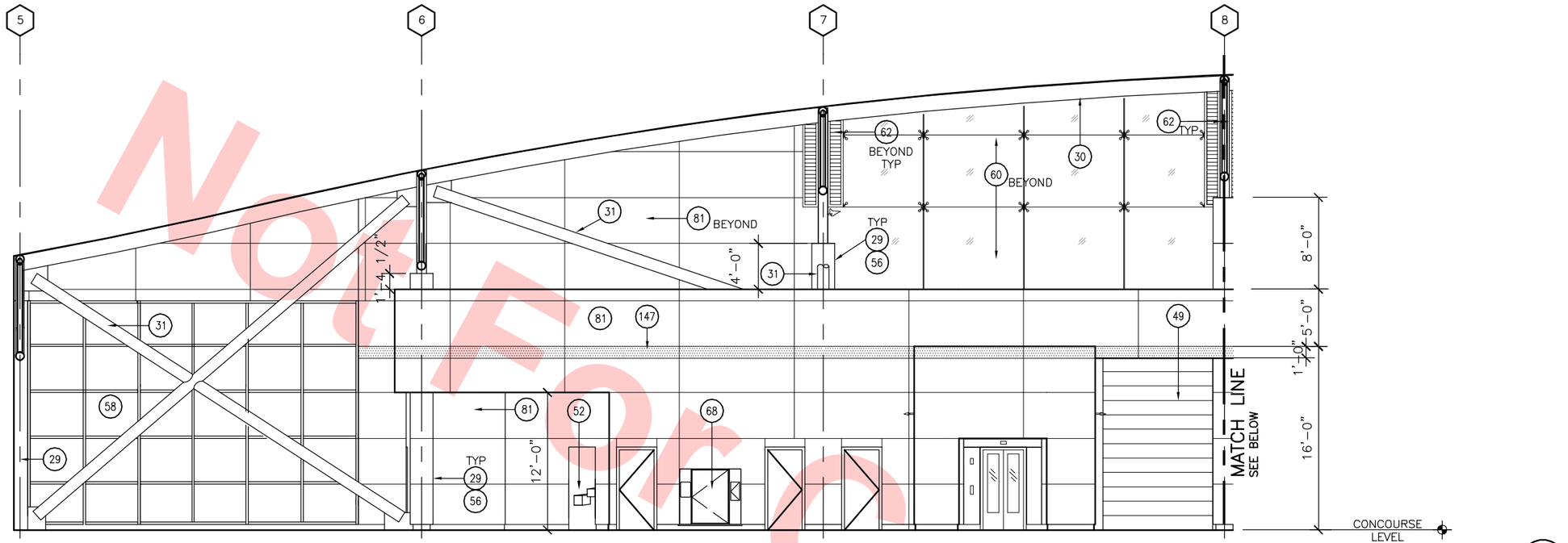

INTERIOR ELEVATIONS (A)

SCALE: 3/16"=1'-0"

DB-A513

DB-A122X

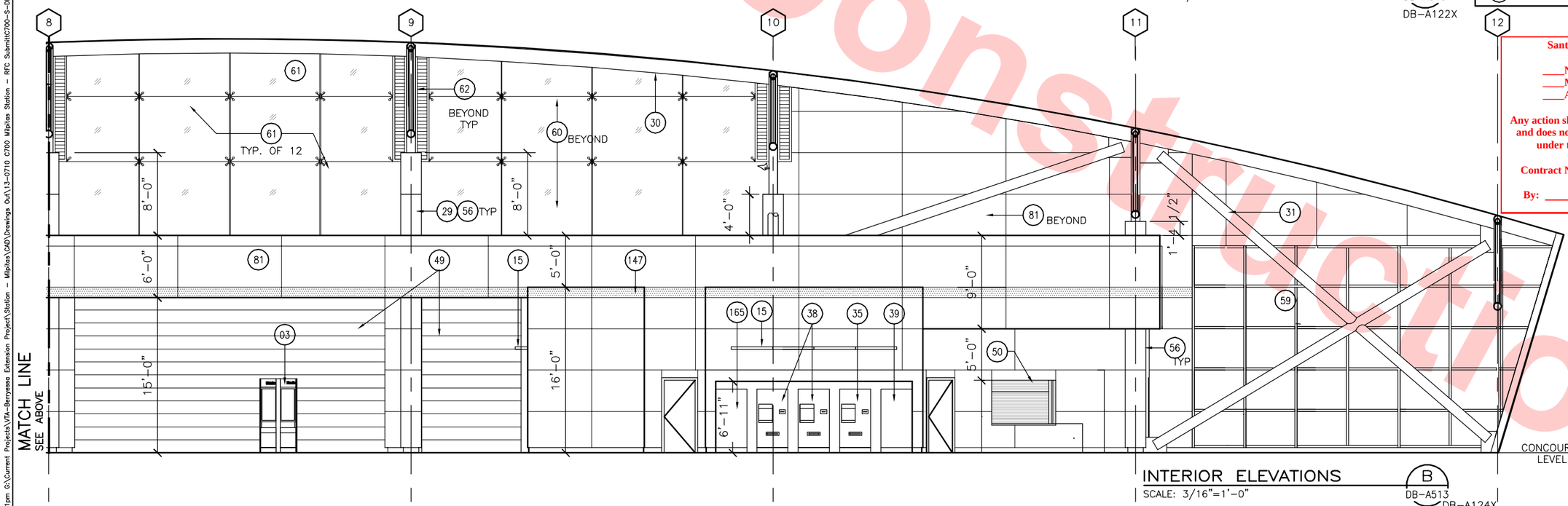

INTERIOR ELEVATIONS (B)

SCALE: 3/16"=1'-0"

DB-A513

DB-A124X

KEY NOTES

- 03 INFO KIOSK – THREE-SIDED, BFS DET 1/AS85
- 15 LIGHT FIXTURE
- 29 STRUCTURAL COLUMN
- 30 STRUCTURAL BEAM
- 31 STRUCTURAL MEMBER
- 35 BILL CHANGE MACHINE, PER BFS
- 38 ADD FARE MACHINE, BFS SHT J001–J004
- 39 FUTURE AFM, PER BFS
- 49 OVERHEAD COILING GRILLE
- 50 OVERHEAD COILING DOOR
- 52 DRINKING FOUNTAIN
- 56 METAL COLUMN COVER TO MATCH COMPOSITE WALL PANEL WP–1
- 58 GLASS WALL SYSTEM TYPE 2
- 59 GLASS WALL SYSTEM TYPE 3
- 60 FRAMELESS GLASS WALL SYSTEM TYPE 1
- 61 ART GLASS PANE
- 62 LOUVER
- 68 FIRE HOSE CABINET – SEE FIRE PROTECTION DRAWINGS
- 81 COMPOSITE WALL PANEL WP–1, SEE DWG NO. DB–A701
- 145 SMOKE CONTROL FAN AND DUCT
- 147 METAL PANEL ACCENT BAND WP–1A, SEE DWG NO. DB–A701
- 165 PARKING VALIDATION MACHINE (PVM)

Santa Clara Valley Transportation Authority

____NO EXCEPTIONS TAKEN (NET)
____MAKE CORRECTIONS NOTED (MCN)
____AMEND AND RESUBMIT (A/R)

Any action shown above is subject to the terms of the contract and does not relieve the Contractor of any of its obligations under the contract, including design and detailing.

Contract No.: DB11002F

By: _____ Date: _____

Not For Construction

REV	DATE	BY	SUB	APP	DESCRIPTION
0	20130710				READINESS FOR CONSTRUCTION

DESIGNED BY S. DEBNATH
DRAWN BY R. COLLADO
CHECKED BY E. BALLADA
IN CHARGE R. BARLAAN
DATE 20130710

LICENSED ARCHITECT SOMESH DEBNATH No. C21523 STATE OF CALIFORNIA

Skanska Shimmick Herzog
1436 California Circle
Milpitas, California 95035
A Joint Venture

Anil Verma Associates, Inc.
1970 Broadway, Suite 325, Oakland, CA 94612
Phone: (510) 835-2537 Fax: (510) 835-2339
SUBMITTED

Lockwood, Andrews & Newnam, Inc. A LEO A DALY COMPANY
T·Y·LIN INTERNATIONAL
APPROVED

VTA BART SILICON VALLEY
BART SILICON VALLEY BERRYESSA EXTENSION

LINE, TRACK, STATIONS AND SYSTEMS
DESIGN UNIT 023
MILPITAS STATION
CONCOURSE LEVEL
INTERIOR ELEVATIONS
SHEET 2 OF 5

CADD FILENAME C700–S–DB–A513.dwg
SIZE D | SCALE 3/16"=1'-0"
CONTRACT NO. C700 | REV. 0
AREA CODE DB | SHEET NO. A513 | PAGE NO. 0443

JosephG Jun 26, 2013 – 2:21pm G:\Current Projects\VTA–Berryessa Extension Project\Station – Milpitas\CAD\Drawings Out\13–0710 C700 Milpitas Station – RFC Submit\C700–S–DB–A513.dwg

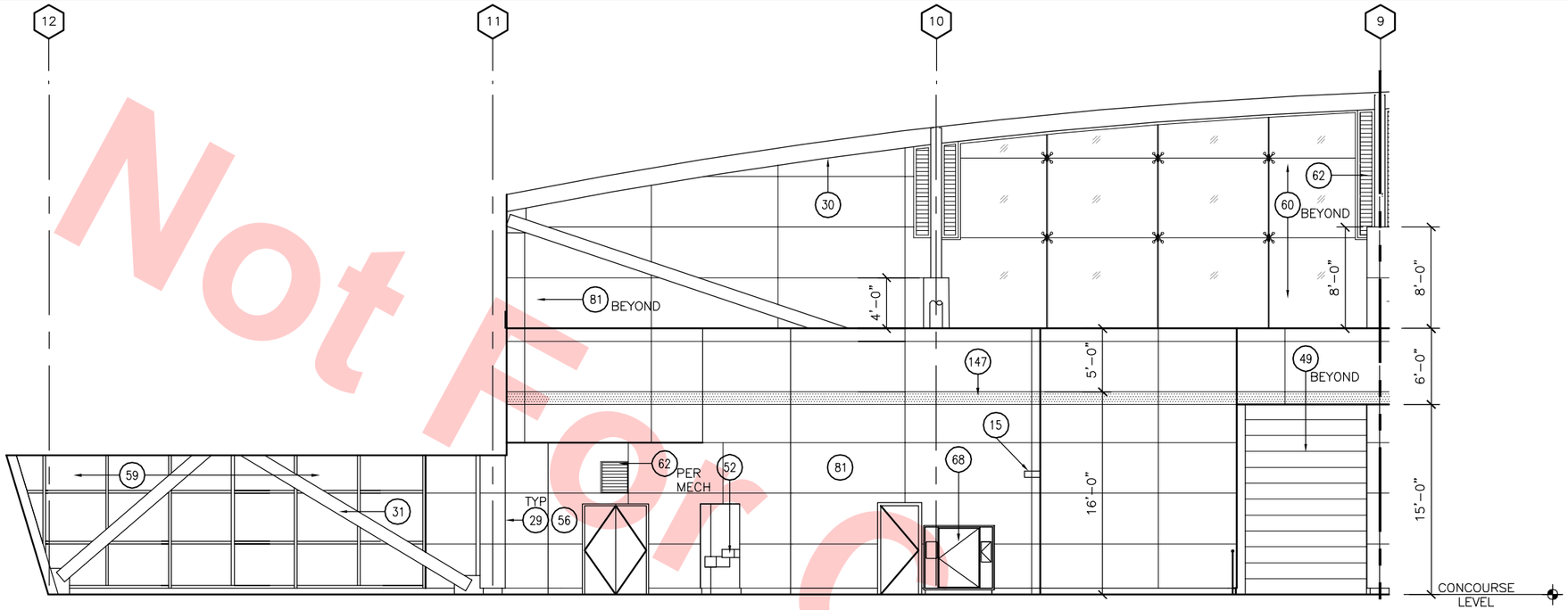

INTERIOR ELEVATIONS (A)
SCALE: 3/16"=1'-0"
DB-A514
DB-A125X

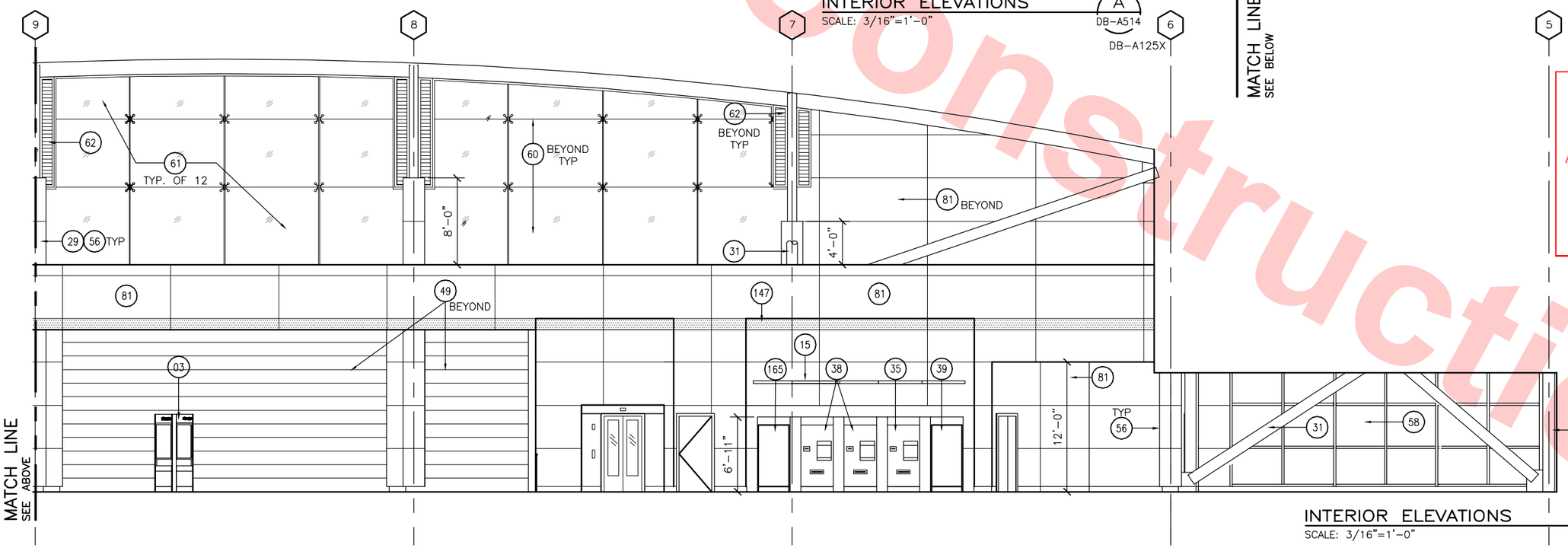

INTERIOR ELEVATIONS (B)
SCALE: 3/16"=1'-0"
DB-A514
DB-A123X

2' 0' 2' 4' 6' 8' 10' 12' 14'
GRAPHIC SCALE

KEY NOTES

- 03 INFO KIOSK – THREE-SIDED, BFS DET 1/AS85
- 15 LIGHT FIXTURE
- 29 STRUCTURAL COLUMN
- 30 STRUCTURAL BEAM
- 31 STRUCTURAL MEMBER
- 35 BILL CHANGE MACHINE, PER BFS
- 38 ADD FARE MACHINE, BFS SHT J001–J004
- 39 FUTURE ADD FARE/PARKING MACHINE
- 49 OVERHEAD COILING GRILLE
- 52 DRINKING FOUNTAIN
- 56 METAL COLUMN COVER TO MATCH COMPOSITE WALL PANEL WP-1
- 58 GLASS WALL SYSTEM TYPE 2
- 59 GLASS WALL SYSTEM TYPE 3
- 60 FRAMELESS GLASS WALL SYSTEM TYPE 1
- 61 ART GLASS PANE
- 62 LOUVER
- 68 FIRE HOSE CABINET – SEE FIRE PROTECTION DRAWINGS
- 81 COMPOSITE WALL PANEL WP-1, SEE DWG NO. DB-A701
- 147 METAL PANEL ACCENT BAND WP-1A, SEE DWG NO. DB-A701
- 165 PARKING VALIDATION MACHINE

Santa Clara Valley Transportation Authority

____NO EXCEPTIONS TAKEN (NET)
____MAKE CORRECTIONS NOTED (MCN)
____AMEND AND RESUBMIT (A/R)

Any action shown above is subject to the terms of the contract and does not relieve the Contractor of any of its obligations under the contract, including design and detailing.

Contract No.: DB11002F

By: _____ **Date:** _____

Not For Construction

REV	DATE	BY	SUB	APP	DESCRIPTION
0	20130710				READINESS FOR CONSTRUCTION

DESIGNED BY S. DEBNATH
DRAWN BY R. COLLADO
CHECKED BY E. BALLADA
IN CHARGE R. BARLAAN
DATE 20130710

LICENSED ARCHITECT SOMESH DEBNATH No. C21523 STATE OF CALIFORNIA

Skanska Shimmick Herzog
1436 California Circle
Milpitas, California 95035
A Joint Venture

Anil Verma Associates, Inc.
1970 Broadway, Suite 525, Oakland, CA 94612
Phone: (510) 835-2537 Fax: (510) 835-2339
SUBMITTED

Lockwood, Andrews & Newnam, Inc. A LEO A DALY COMPANY
T·Y·LIN INTERNATIONAL
APPROVED

VTA BART SILICON VALLEY
BART SILICON VALLEY BERRYESSA EXTENSION

LINE, TRACK, STATIONS AND SYSTEMS
DESIGN UNIT 023
MILPITAS STATION
CONCOURSE LEVEL
INTERIOR ELEVATIONS
SHEET 3 OF 5

CADD FILENAME C700-S-DB-A514.dwg
SIZE D | SCALE 3/16"=1'-0"
CONTRACT NO. C700 | REV. 0
AREA CODE DB | SHEET NO. A514 | PAGE NO. 0444

Jun 26, 2013 – 2:22pm G:\Current Projects\VTA-Berryessa Extension Project\Station – Milpitas\CAD\Drawings Out\13-0710 C700 Milpitas Station – RFC Submit\C700-S-DB-A514.dwg
JosephG

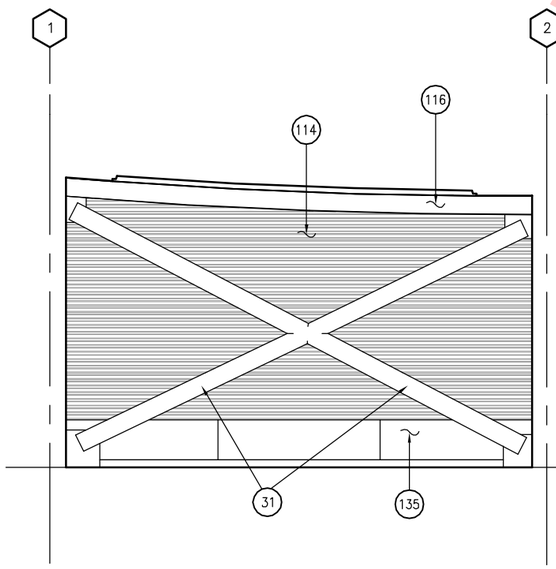

INTERIOR ELEVATIONS (A) DB–A515
SCALE: 3/16"=1'–0"
DB–A121X

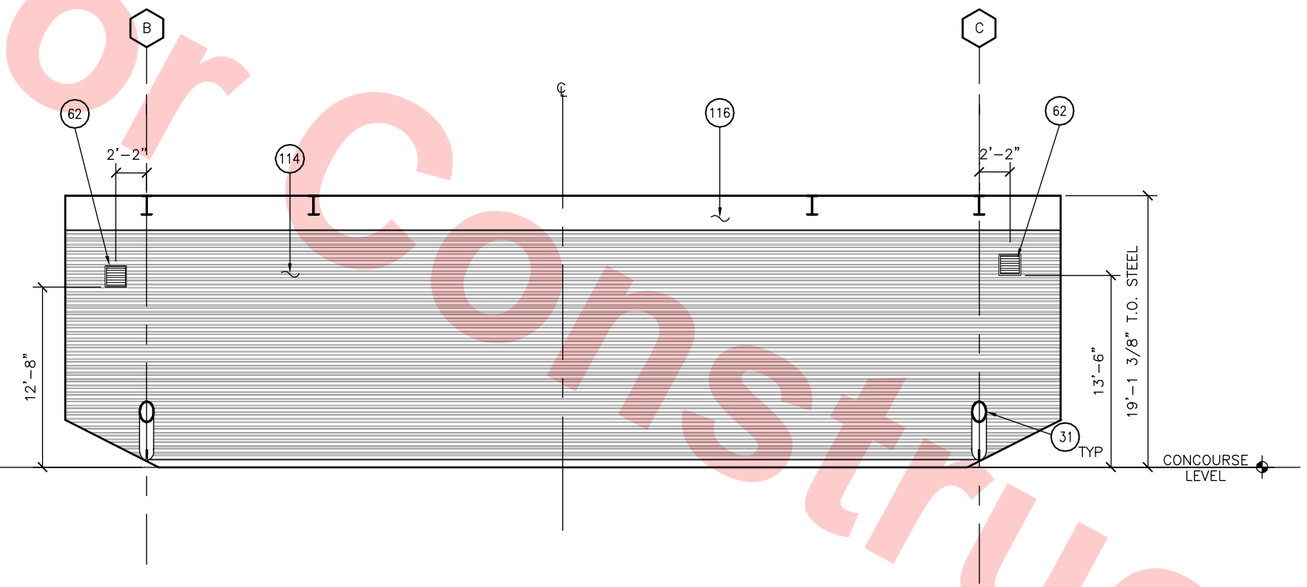

INTERIOR ELEVATIONS (B) DB–A515
SCALE: 3/16"=1'–0"
DB–A121X

KEY NOTES

- 62 LOUVER
- 114 METAL WALL PANEL WP–2
- 116 ARCHITECTURAL METAL FASCIA RF–1
- 135 METAL COVER (SLOPING)

Santa Clara Valley Transportation Authority

____NO EXCEPTIONS TAKEN (NET)
____MAKE CORRECTIONS NOTED (MCN)
____AMEND AND RESUBMIT (A/R)

Any action shown above is subject to the terms of the contract and does not relieve the Contractor of any of its obligations under the contract, including design and detailing.

Contract No.: DB11002F

By: _____ Date: _____

2' 0' 2' 4' 6' 8' 10' 12' 14'
GRAPHIC SCALE

Not For Construction

REV	DATE	BY	SUB	APP	DESCRIPTION
0	20130710				READINESS FOR CONSTRUCTION

DESIGNED BY S. DEBNATH
DRAWN BY R. COLLADO
CHECKED BY E. BALLADA
IN CHARGE R. BARLAAN
DATE 20130710

LICENSED ARCHITECT SAMESH DEBNATH No. C21523 STATE OF CALIFORNIA

Skanska Shimmick Herzog
1436 California Circle
Milpitas, California 95035
A Joint Venture

Anil Verma Associates, Inc.
1970 Broadway, Suite 535 Oakland, CA 94612
Phone: (510) 835-2537 Fax: (510) 535-2339
SUBMITTED

Lockwood, Andrews & Newnam, Inc. A LAN & BALL COMPANY
T·Y·LIN INTERNATIONAL
APPROVED

VTA BART SILICON VALLEY
BART SILICON VALLEY BERRYESSA EXTENSION

LINE, TRACK, STATIONS AND SYSTEMS
DESIGN UNIT 023
MILPITAS STATION
CONCOURSE LEVEL
INTERIOR ELEVATIONS
SHEET 4 OF 5

CADD FILENAME C700–S–DB–A515.dwg
SIZE D | SCALE 3/16"=1'–0"
CONTRACT NO. C700 | REV. 0
AREA CODE DB | SHEET NO. A515 | PAGE NO. 0445

JosephG Jun 26, 2013 – 2:23pm G:\Current Projects\VTA-Berryessa Extension Project\Station – Milpitas\CAD\Drawings Out\13-0710 C700 Milpitas Station – RFC Submit\C700-S-DB-A515.dwg

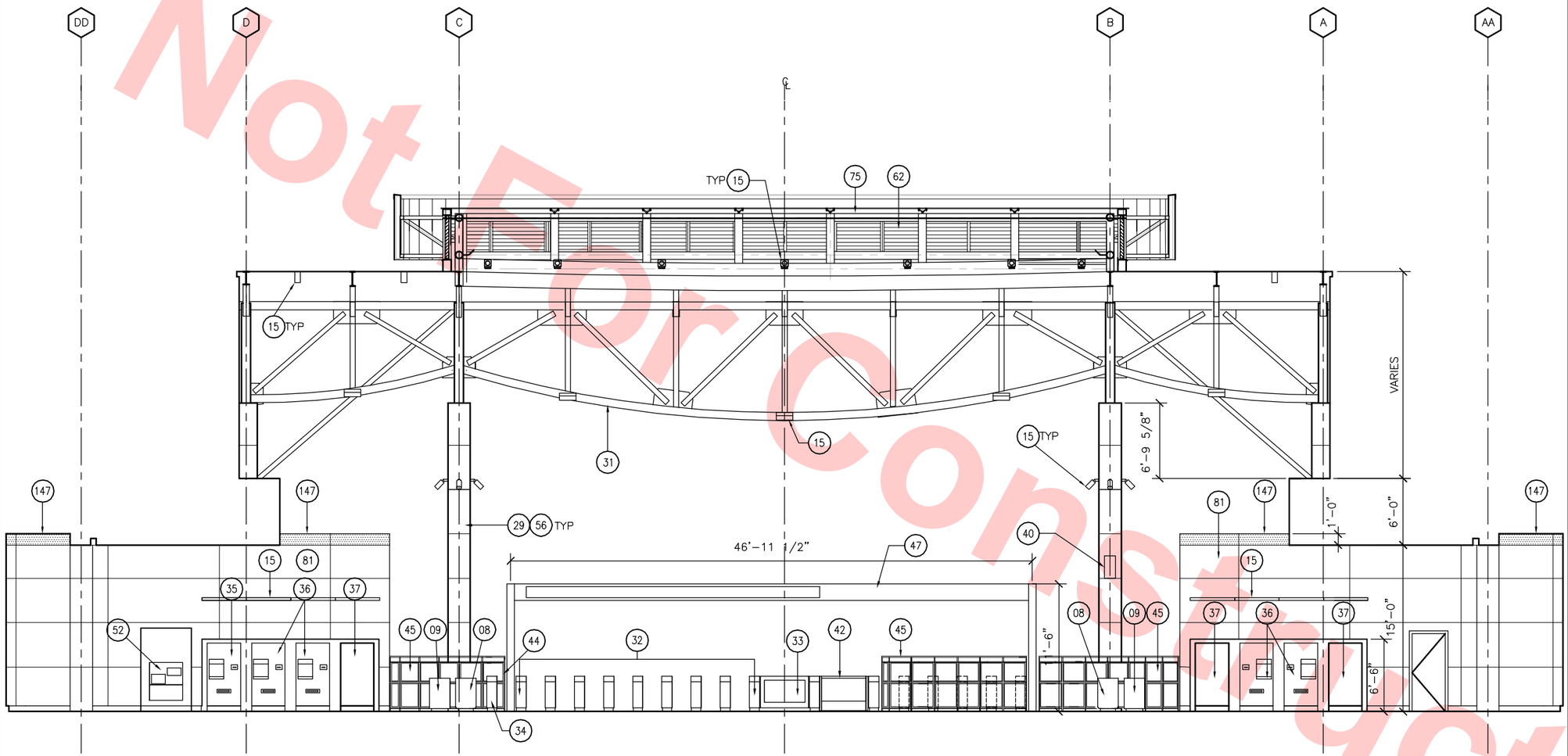

INTERIOR ELEVATIONS (A / DB-A516)

SCALE: 3/16"=1'-0"

DB-A122X
DB-A123X

KEY NOTES

- 08 TRASH RECEPTACLE
- 09 NEWSPAPER RECYCLING RECEPTACLE, NIC
- 15 LIGHT FIXTURE
- 29 STRUCTURAL COLUMN
- 31 STRUCTURAL MEMBER
- 32 FARE GATES, BFS SHT J005 & J006
- 33 ACCESSIBLE FARE GATE, PER BFS
- 34 FUTURE FARE GATE, PER BFS
- 35 BILL CHANGE MACHINE, PER BFS
- 36 TICKET VENDING MACHINE, BFS SHT J001–J004
- 37 FUTURE TVM, PER BFS
- 40 TRAIN INFORMATION MONITOR, PER BFS
- 42 SERVICE GATE, BFS DET 1/AS70
- 44 REMOVABLE GUARDRAIL
- 45 GUARDRAIL ASSEMBLY – GLASS
- 47 WAYFINDING SIGN/SUPPORT
- 52 DRINKING FOUNTAIN
- 56 METAL COLUMN COVER TO MATCH COMPOSITE WALL PANEL WP–1
- 62 LOUVER
- 75 HORIZONTAL STRUCTURAL POINT SUPPORTED GLASS SKYLIGHT SYSTEM
- 81 COMPOSITE WALL PANEL WP–1, SEE DWG NO. DB–A701
- 147 METAL PANEL ACCENT BAND WP–1A, SEE DWG NO. DB–A701

Santa Clara Valley Transportation Authority

____NO EXCEPTIONS TAKEN (NET)
____MAKE CORRECTIONS NOTED (MCN)
____AMEND AND RESUBMIT (A/R)

Any action shown above is subject to the terms of the contract and does not relieve the Contractor of any of its obligations under the contract, including design and detailing.

Contract No.: DB11002F

By: _____ Date: _____

Not For Construction

REV	DATE	BY	SUB	APP	DESCRIPTION
0	20130710				READINESS FOR CONSTRUCTION

DESIGNED BY S. DEBNATH
DRAWN BY R. COLLADO
CHECKED BY E. BALLADA
IN CHARGE R. BARLAAN
DATE 20130710

LICENSED ARCHITECT SOMESH DEBNATH No. C21523 STATE OF CALIFORNIA

Skanska Shimmick Herzog
1436 California Circle
Milpitas, California 95035
A Joint Venture

Anil Verma Associates, Inc.
1970 Broadway, Suite 525, Oakland, CA 94612
Phone: (510) 835-2537 Fax: (510) 835-2339

Lockwood, Andrews & Newnam, Inc. A LEO A DALY COMPANY

T·Y·LIN INTERNATIONAL

SUBMITTED _____ APPROVED _____

VTA BART SILICON VALLEY
BART SILICON VALLEY BERRYESSA EXTENSION

LINE, TRACK, STATIONS AND SYSTEMS
DESIGN UNIT 023
MILPITAS STATION
CONCOURSE LEVEL
INTERIOR ELEVATIONS
SHEET 5 OF 5

CADD FILENAME C700–S–DB–A516.dwg
SIZE D | SCALE 3/16"=1'-0"
CONTRACT NO. C700 | REV. 0
AREA CODE DB | SHEET NO. A516 | PAGE NO. 0446

JosephG Jun 26, 2013 – 2:24pm G:\Current Projects\VTA-Berryessa Extension Project\Station – Milpitas\CAD\Drawings Out\13-0710 C700 Milpitas Station – RFC Submit\C700-S-DB-A516.dwg

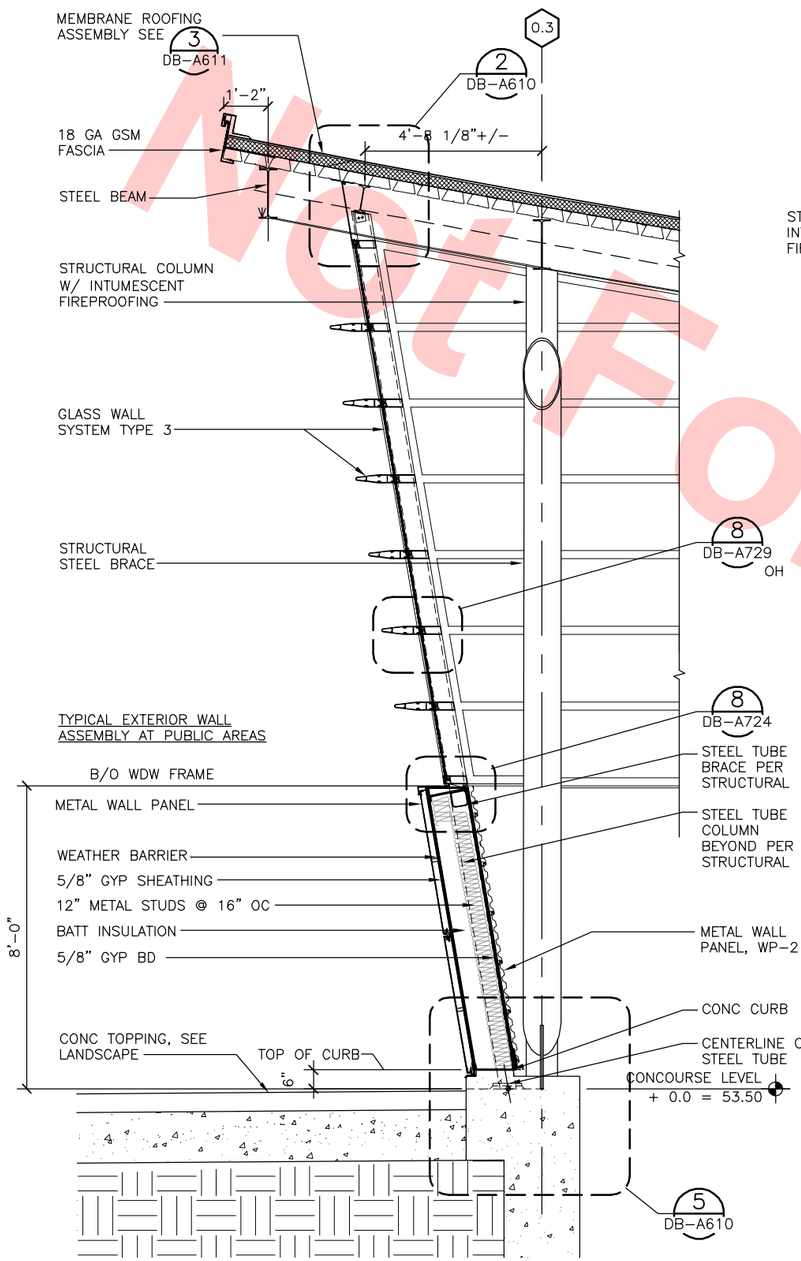

SECTION A
SCALE: 1/2"=1'-0"
DB-A521 DB-A565

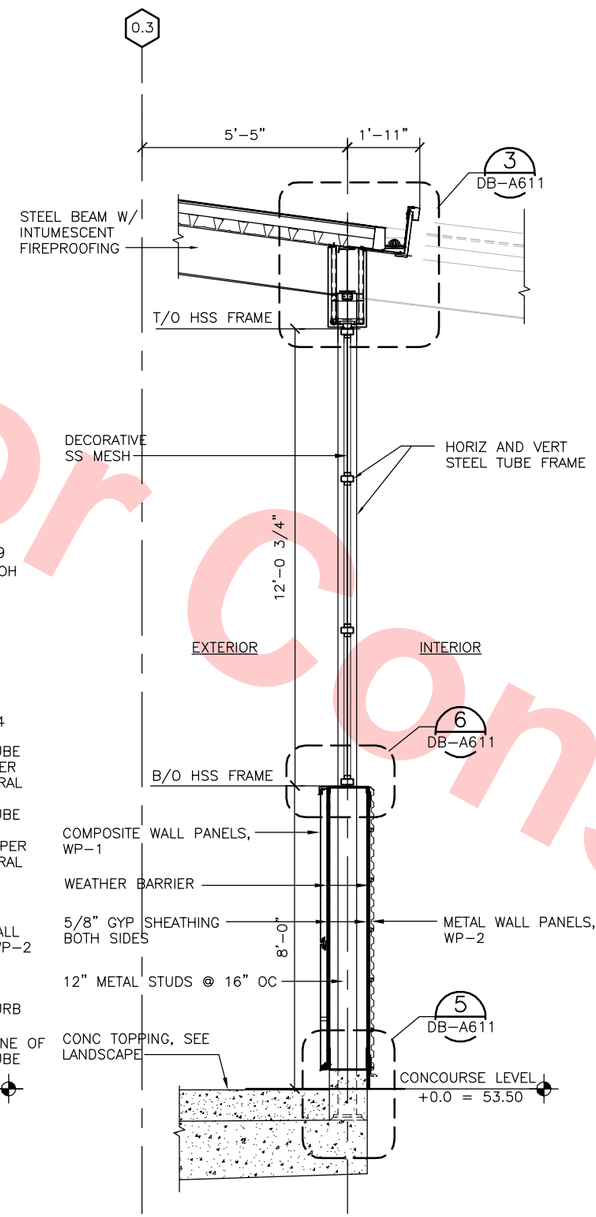

SECTION B
SCALE: 1/2"=1'-0"
DB-A521 DB-A201

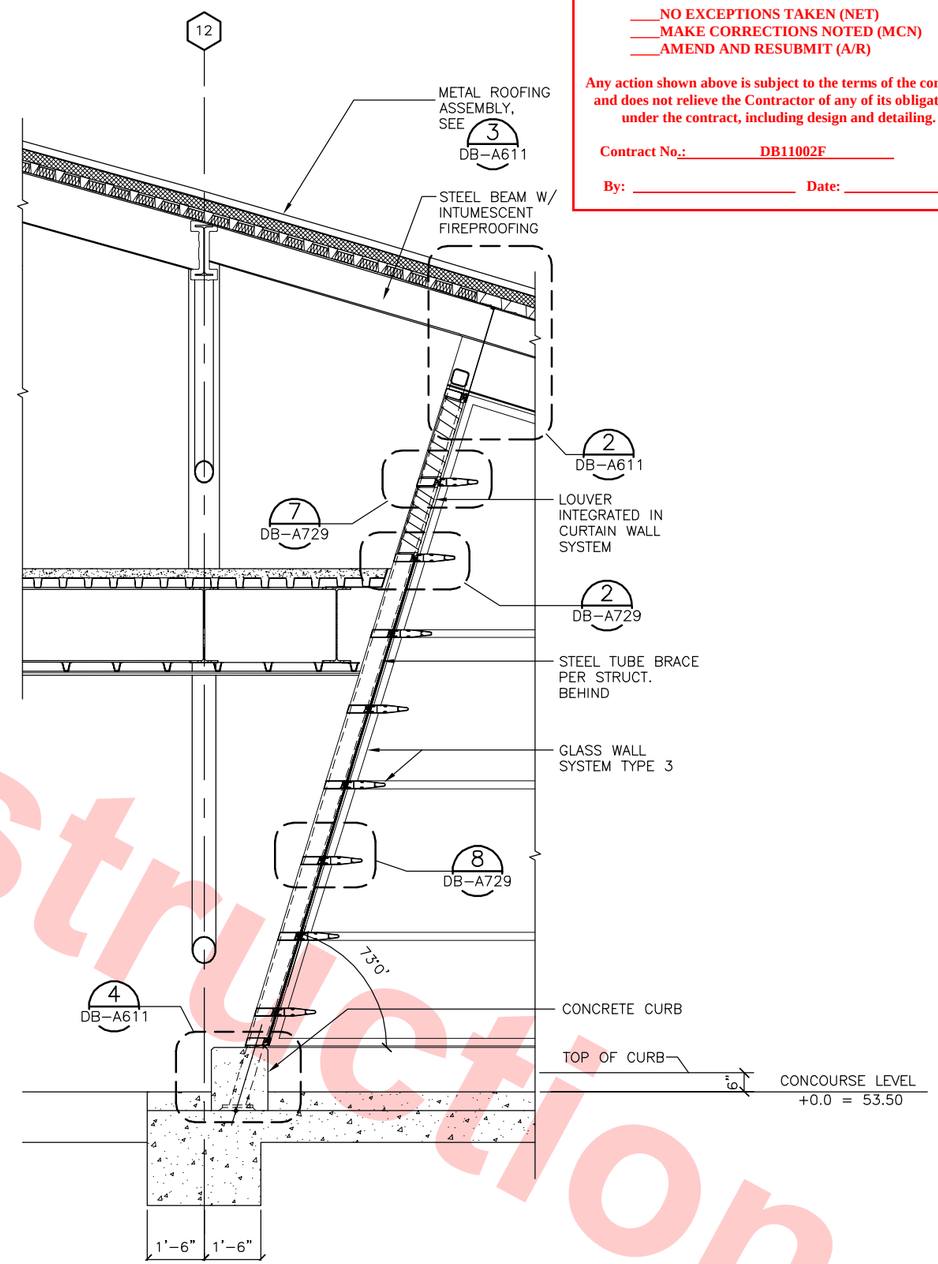

SECTION C
SCALE: 1/2"=1'-0"
DB-A521 DB-A322

Not For Construction

Santa Clara Valley Transportation Authority

____NO EXCEPTIONS TAKEN (NET)
____MAKE CORRECTIONS NOTED (MCN)
____AMEND AND RESUBMIT (A/R)

Any action shown above is subject to the terms of the contract and does not relieve the Contractor of any of its obligations under the contract, including design and detailing.

Contract No.: DB11002F

By: _____ Date: _____

REV	DATE	BY	SUB	APP	DESCRIPTION
0	20130710				READINESS FOR CONSTRUCTION

DESIGNED BY S. DEBNATH
DRAWN BY R. COLLADO
CHECKED BY E. BALLADA
IN CHARGE R. BARLAAN
DATE 20130710

LICENSED ARCHITECT SOMESH DEBNATH No. C21523 STATE OF CALIFORNIA

Skanska Shimmick Herzog
1436 California Circle
Milpitas, California 95035
A Joint Venture

Anil Verma Associates, Inc.
1970 Broadway, Suite 525, Oakland, CA 94612
Phone: (510) 835-2537 Fax: (510) 835-2339

Lockwood, Andrews & Newnam, Inc. A LEO A DALY COMPANY

T·Y·LIN INTERNATIONAL

SUBMITTED _____
APPROVED _____

VTA BART SILICON VALLEY
BART SILICON VALLEY BERRYESSA EXTENSION

LINE, TRACK, STATIONS AND SYSTEMS
DESIGN UNIT 023
MILPITAS STATION

WALL SECTIONS
SHEET 1 OF 7

CADD FILENAME C700-S-DB-A521.dwg
SIZE D | SCALE 1/2"=1'-0"
CONTRACT NO. C700 | REV. 0
AREA CODE DB | SHEET NO. A521 | PAGE NO. 0447

Joseph G Jun 26, 2013 – 2:25pm G:\Current Projects\VTA-Berryessa Extension Project\Station – Milpitas\CAD\Drawings Out\13-0710 C700 Milpitas Station – RFC Submit\C700-S-DB-A521.dwg

Santa Clara Valley Transportation Authority

____NO EXCEPTIONS TAKEN (NET)
____MAKE CORRECTIONS NOTED (MCN)
____AMEND AND RESUBMIT (A/R)

Any action shown above is subject to the terms of the contract and does not relieve the Contractor of any of its obligations under the contract, including design and detailing.

Contract No.: DB11002F

By: _____ Date: _____

Not For Construction

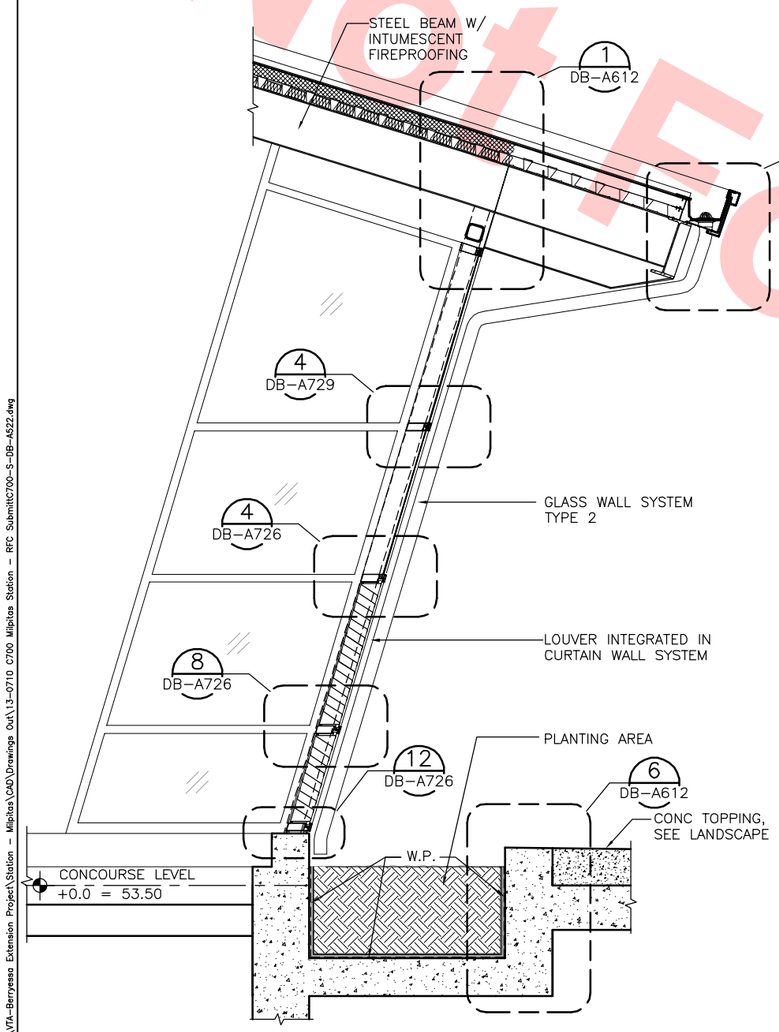

SECTION A DB-A522
SCALE: 1/2"=1'-0"
DB-A204
DB-A322

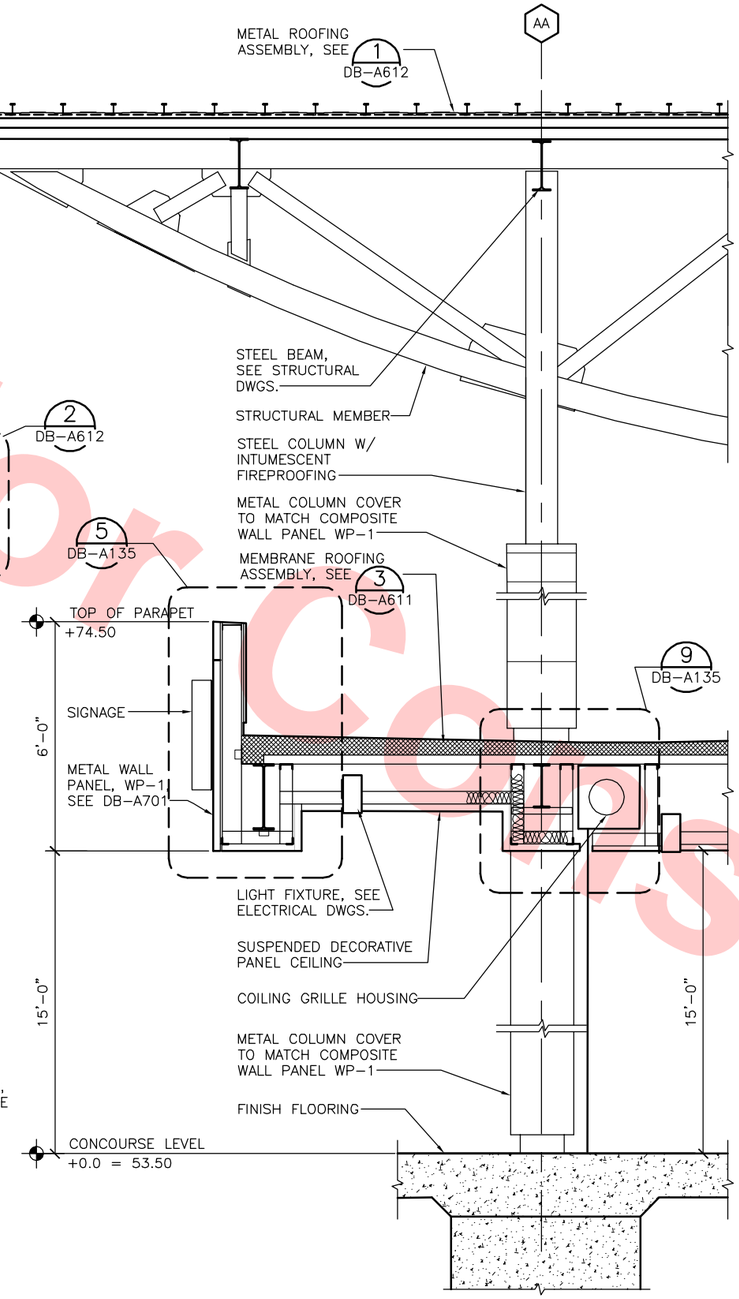

SECTION B DB-A522
SCALE: 1/2"=1'-0"
DB-A214

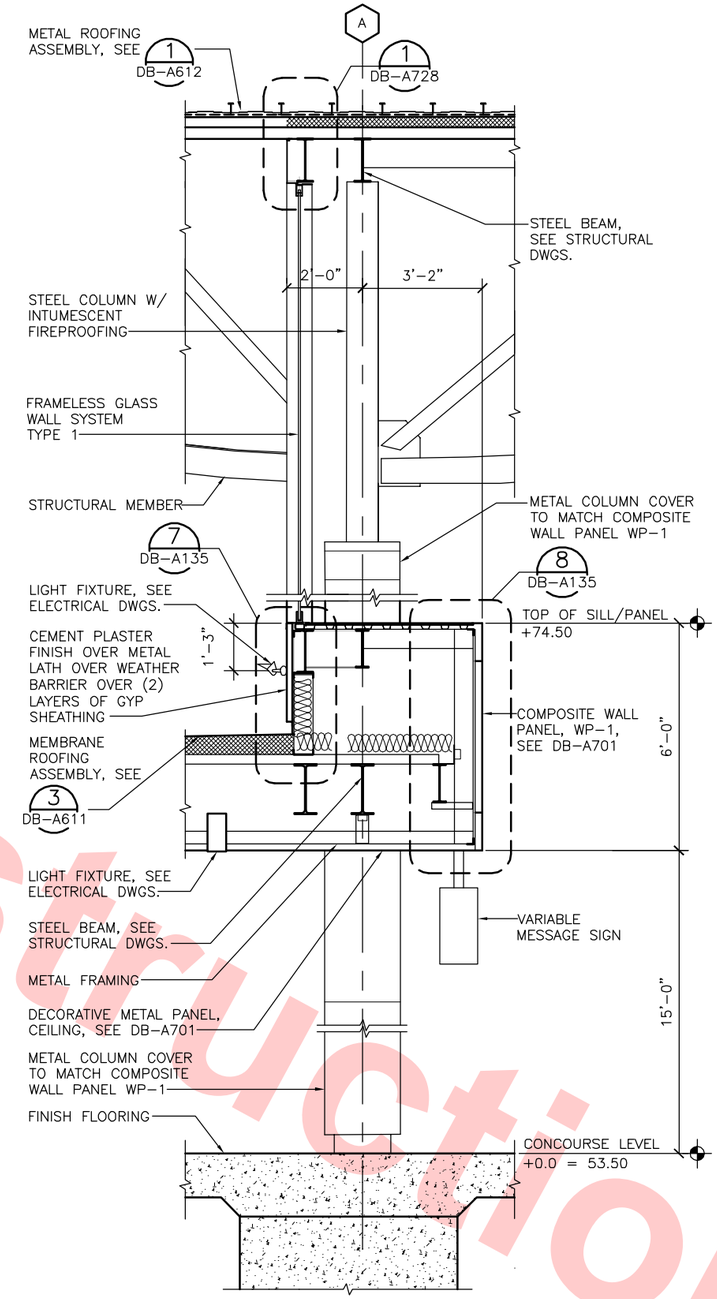

SECTION C DB-A522
SCALE: 1/2"=1'-0"
DB-A214

REV	DATE	BY	SUB	APP	DESCRIPTION
0	20130710				READINESS FOR CONSTRUCTION

DESIGNED BY S. DEBNATH
DRAWN BY RC/PPB
CHECKED BY E. BALLADA
IN CHARGE R. BARLAAN
DATE 20130710

LICENSED ARCHITECT SOMESH DEBNATH No. C21523 STATE OF CALIFORNIA

Skanska Shimmick Herzog
1436 California Circle
Milpitas, California 95035
A Joint Venture

Anil Verma Associates, Inc.
1970 Broadway, Suite 525, Oakland, CA 94612
Phone: (510) 835-2537 Fax: (510) 835-2339
SUBMITTED

Lockwood, Andrews & Newnam, Inc. A LEO A DALY COMPANY
T·Y·LIN INTERNATIONAL
APPROVED

VTA BART SILICON VALLEY
BART SILICON VALLEY BERRYESSA EXTENSION

LINE, TRACK, STATIONS AND SYSTEMS DESIGN UNIT 023
MILPITAS STATION

WALL SECTIONS
SHEET 2 OF 7

CADD FILENAME C700-S-DB-A522.dwg
SIZE D | SCALE 1/2"=1'-0"
CONTRACT NO. C700 | REV. 0
AREA CODE DB | SHEET NO. A522 | PAGE NO. 0448

JosephG Jun 26, 2013 - 2:27pm G:\Current Projects\VTA-Berryessa Extension Project\Station - Milpitas\CAD\Drawings Out\13-0710 C700 Milpitas Station - RFC Submit\C700-S-DB-A522.dwg

Santa Clara Valley Transportation Authority

____NO EXCEPTIONS TAKEN (NET)
____MAKE CORRECTIONS NOTED (MCN)
____AMEND AND RESUBMIT (A/R)

Any action shown above is subject to the terms of the contract and does not relieve the Contractor of any of its obligations under the contract, including design and detailing.

Contract No.: DB11002F

By: _____ Date: _____

Not For Construction

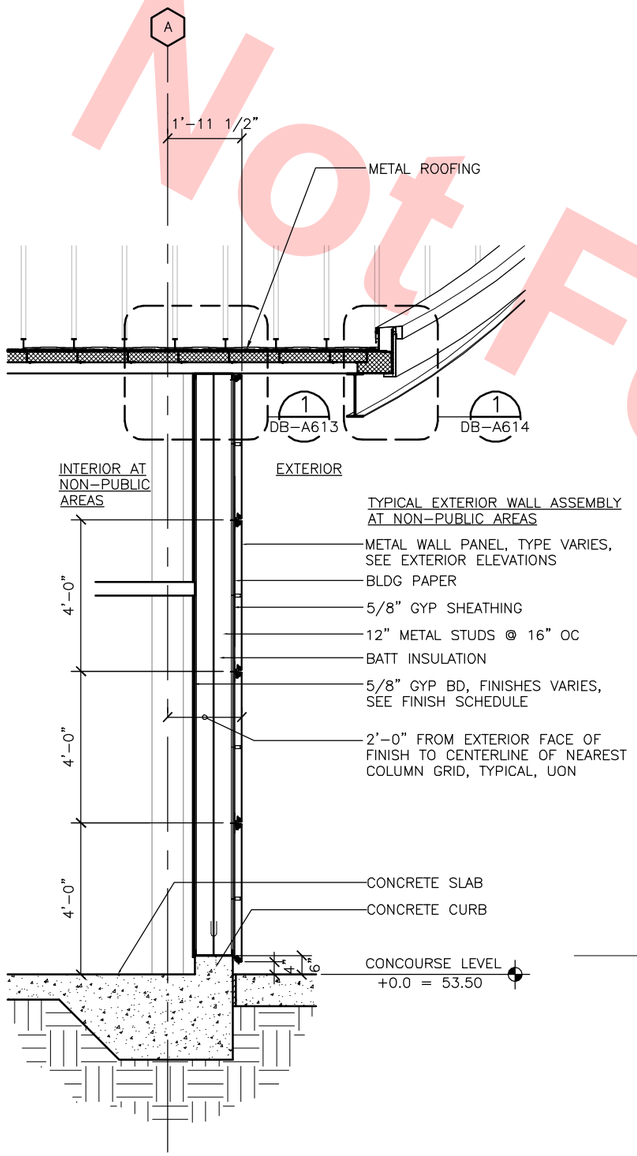

SECTION A
SCALE: 1/2"=1'-0"
DB-A523 DB-A211

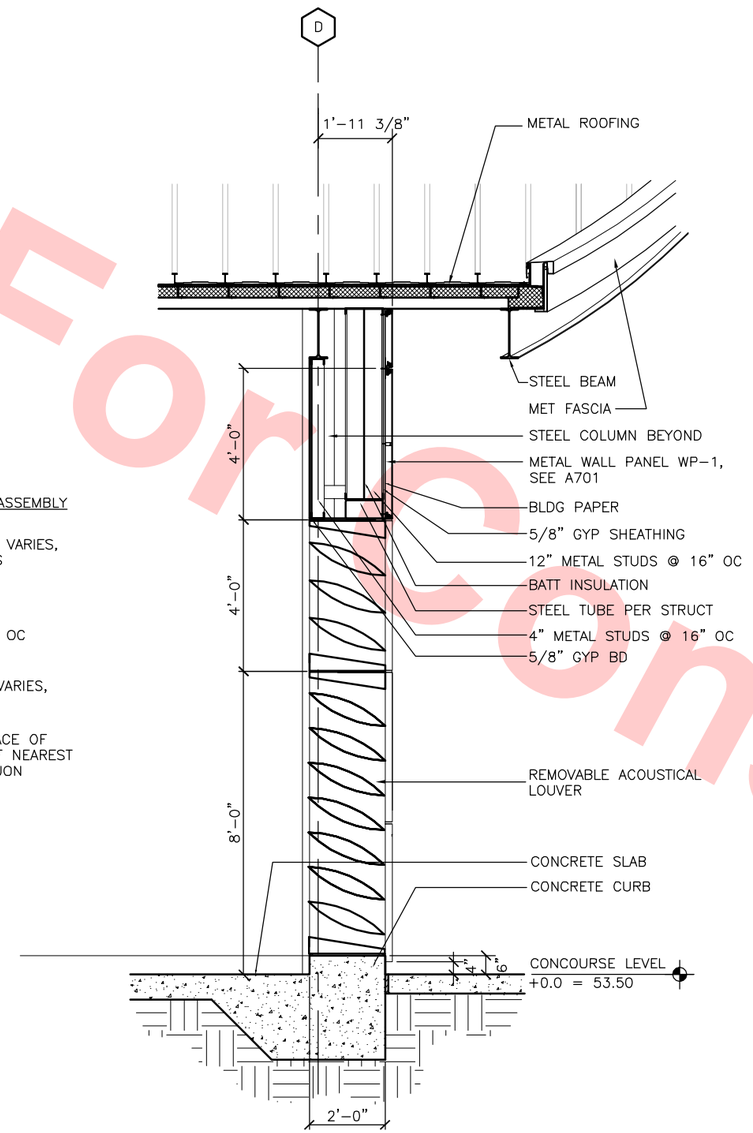

SECTION B
SCALE: 1/2"=1'-0"
DB-A523 DB-A212

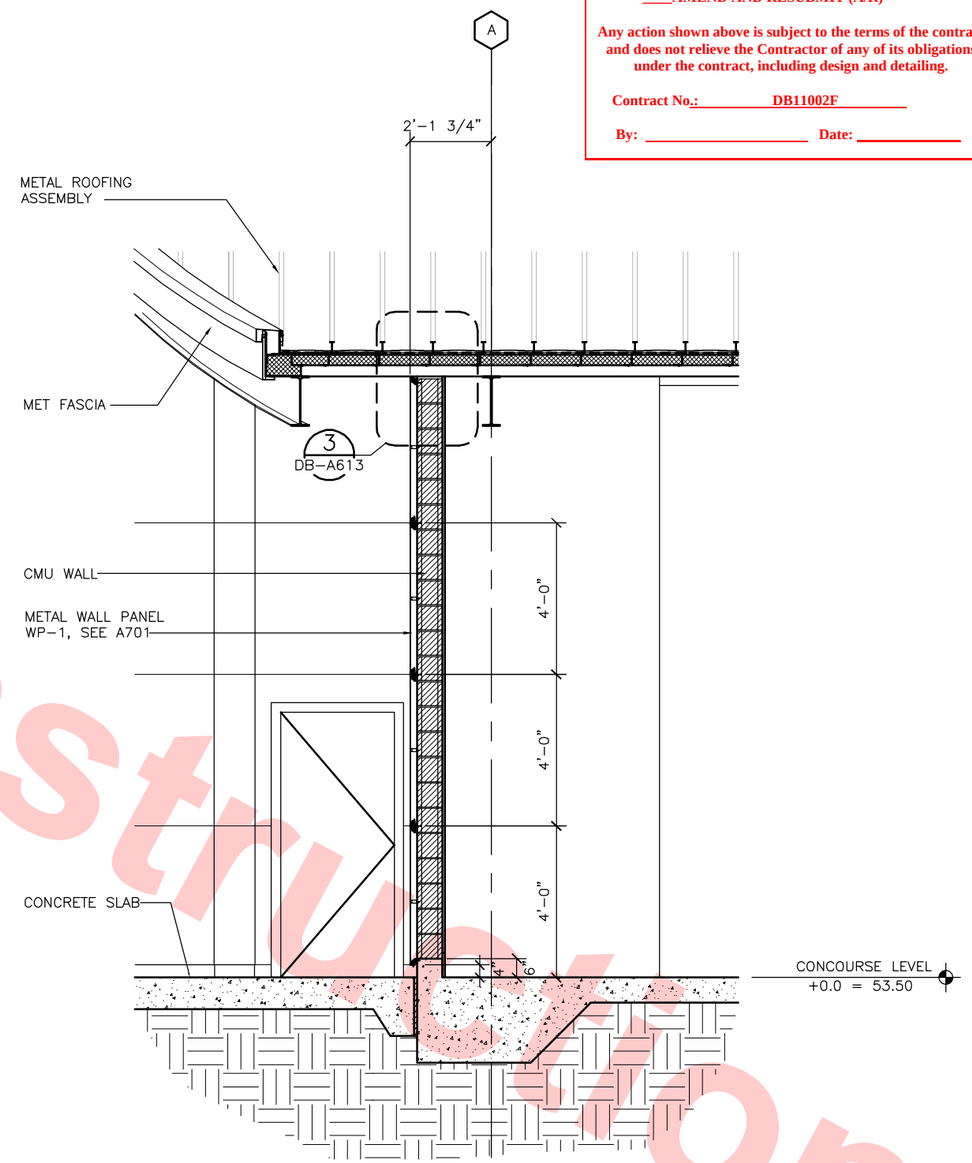

SECTION C
SCALE: 1/2"=1'-0"
DB-A523 DB-A211

REV	DATE	BY	SUB	APP	DESCRIPTION
0	20130710				READINESS FOR CONSTRUCTION

DESIGNED BY S. DEBNATH
DRAWN BY R. COLLADO
CHECKED BY E. BALLADA
IN CHARGE R. BARLAAN
DATE 20130710

LICENSED ARCHITECT SANJEEV DEBNATH No. C21523 STATE OF CALIFORNIA

Skanska Shimmick Herzog
1436 California Circle
Milpitas, California 95035
A Joint Venture

Anil Verma Associates, Inc.
1970 Broadway, Suite 525, Oakland, CA 94612
Phone: (510) 835-2537 Fax: (510) 835-2339
SUBMITTED

Lockwood, Andrews & Newnam, Inc. A LEO A DALY COMPANY
T·Y·LIN INTERNATIONAL
APPROVED

VTA BART SILICON VALLEY
BART SILICON VALLEY BERRYESSA EXTENSION

LINE, TRACK, STATIONS AND SYSTEMS
DESIGN UNIT 023
MILPITAS STATION

WALL SECTIONS
SHEET 3 OF 7

CADD FILENAME C700-S-DB-A523.dwg
SIZE D | SCALE 1/2"=1'-0"
CONTRACT NO. C700 | REV. 0
AREA CODE DB | SHEET NO. A523 | PAGE NO. 0449

JosephG Jun 26, 2013 – 2:28pm G:\Current Projects\VTA-Berryessa Extension Project\Station – Milpitas\CAD\Drawings Out\13-0710 C700 Milpitas Station – RFC Submit\C700-S-DB-A523.dwg

Santa Clara Valley Transportation Authority

____NO EXCEPTIONS TAKEN (NET)
____MAKE CORRECTIONS NOTED (MCN)
____AMEND AND RESUBMIT (A/R)

Any action shown above is subject to the terms of the contract and does not relieve the Contractor of any of its obligations under the contract, including design and detailing.

Contract No.: DB11002F

By: _____ Date: _____

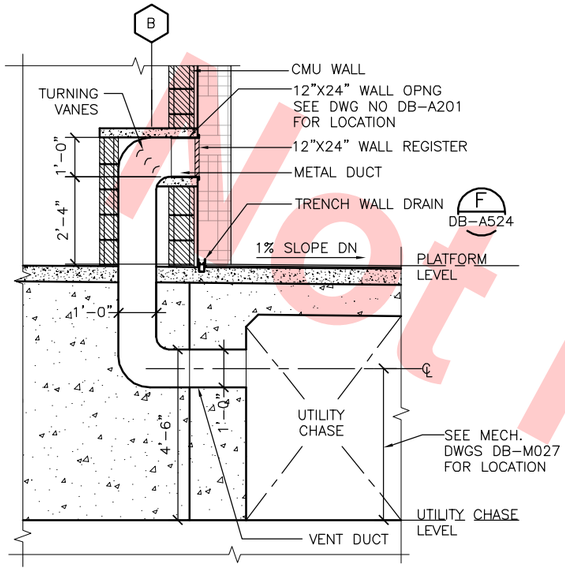

LOW WALL VENT SECTION (A DB-A524)
SCALE: 1/2" = 1'-0"
DB-A211

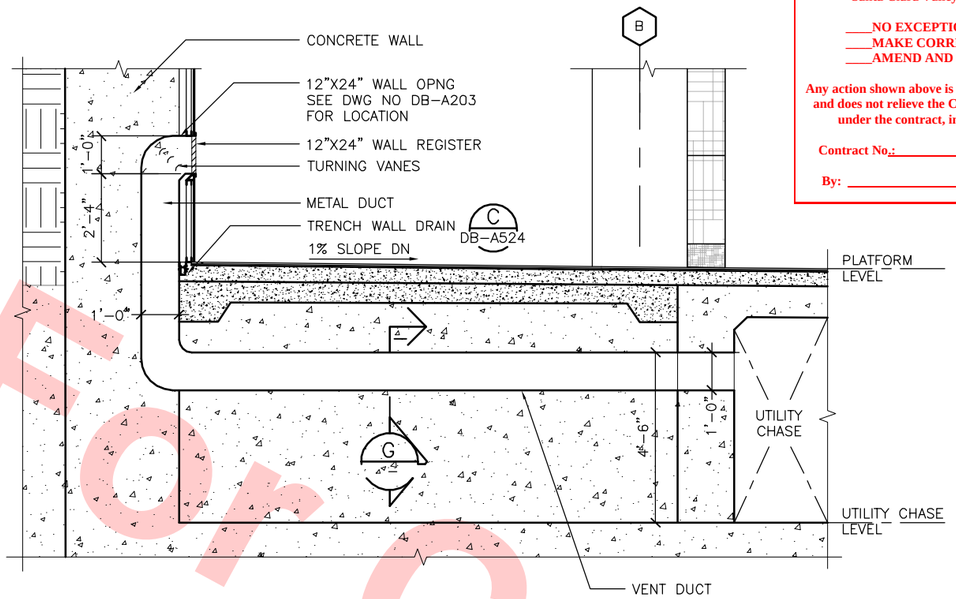

LOW WALL VENT SECTION @ CONCRETE (B DB-A524)
SCALE: 1/2" = 1'-0"
DB-A214

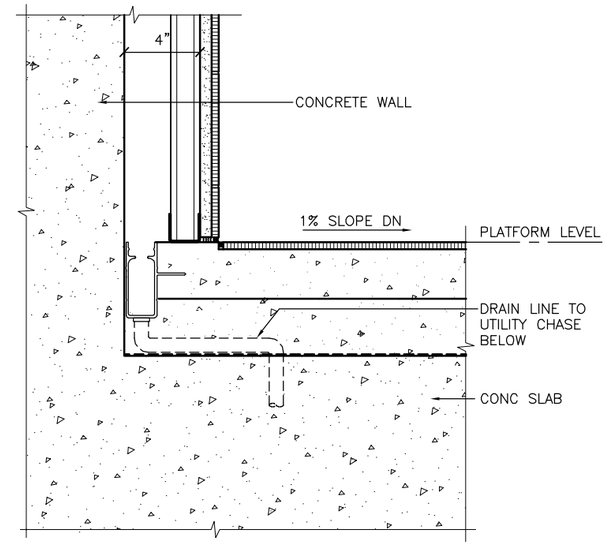

RETAINING WALL DRAIN (C DB-A524)
SCALE: 3" = 1'-0"

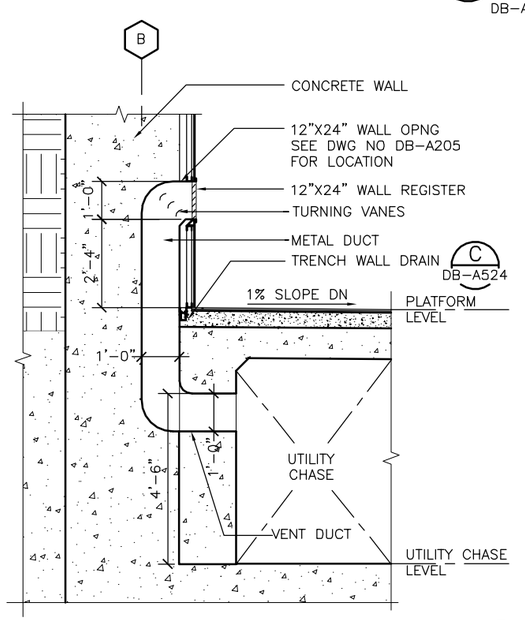

LOW WALL VENT SECTION @ CONCRETE (D DB-A524)
SCALE: 1/2" = 1'-0"
DB-A217

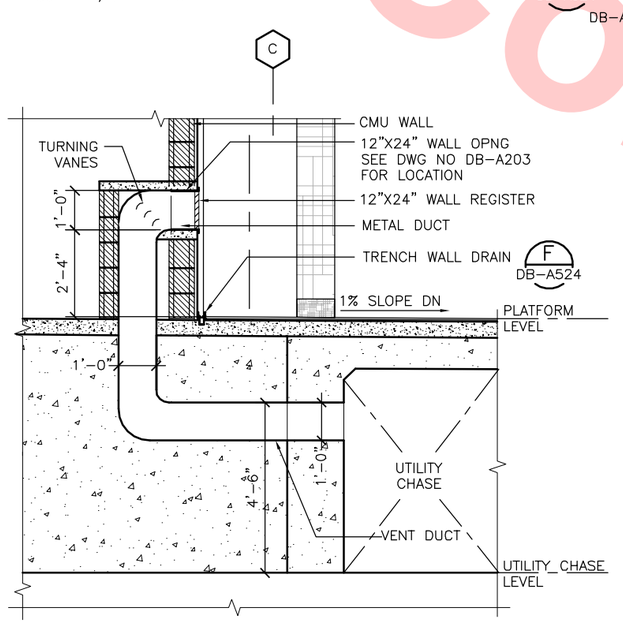

LOW WALL VENT SECTION (E DB-A524)
SCALE: 1/2" = 1'-0"
DB-A215

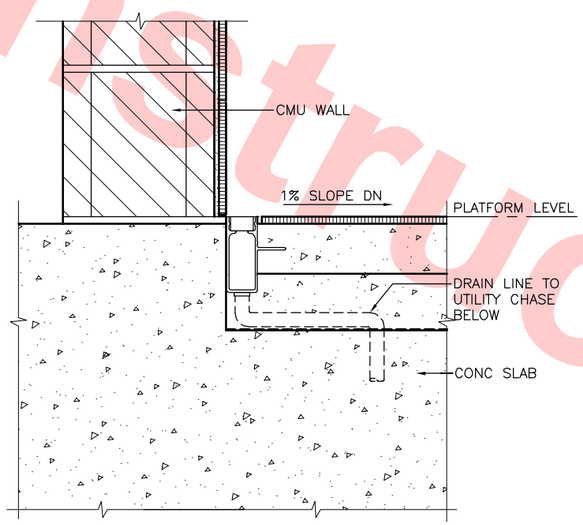

RETAINING WALL DRAIN (F DB-A524)
SCALE: 3" = 1'-0"

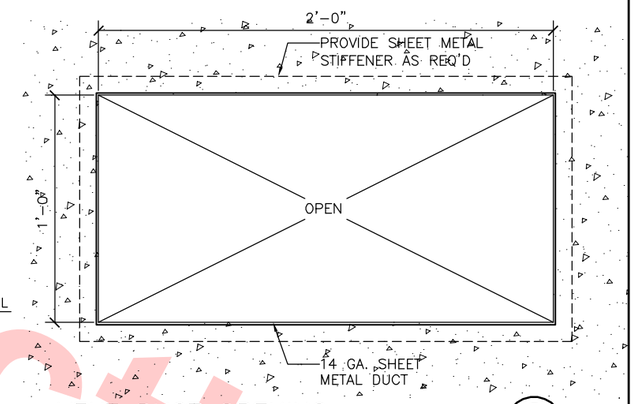

VENT DUCT OPENING (G DB-A524)
SCALE: 3" = 1'-0"

NOTE:

FOR LOW VENT VERTICAL LOCATION, REFER TO MECHANICAL DRAWING SHEET DB-M027

Not For Construction

REV	DATE	BY	SUB	APP	DESCRIPTION
0	20130710				READINESS FOR CONSTRUCTION

DESIGNED BY S. DEBNATH
DRAWN BY R. COLLADO
CHECKED BY E. BALLADA
IN CHARGE R. BARLAAN
DATE 20130710

LICENSED ARCHITECT SAMESH DEBNATH No. C21523 STATE OF CALIFORNIA

Skanska Shimmick Herzog
1436 California Circle Milpitas, California 95035
A Joint Venture

Anil Verma Associates, Inc. 1970 Broadway, Suite 525 Oakland, CA 94612 Phone: (510) 835-2537 Fax: (510) 835-2339
SUBMITTED

Lockwood, Andrews & Newnam, Inc. A LAN & BALL COMPANY
T·Y·LIN INTERNATIONAL
APPROVED

VTA BART SILICON VALLEY
BART SILICON VALLEY BERRYESSA EXTENSION

LINE, TRACK, STATIONS AND SYSTEMS
DESIGN UNIT 023
MILPITAS STATION
WALL VENT AND TRENCH
WALL DETAILS
SHEET 4 OF 7

CADD FILENAME C700-S-DB-A524.dwg
SIZE D | SCALE AS NOTED
CONTRACT NO. C700 | REV. 0
AREA CODE DB | SHEET NO. A524 | PAGE NO. 0450

Joseph G Jun 26, 2013 – 2:29pm G:\Current Projects\VTA-Berryessa Extension Project\Station – Milpitas\CAD\Drawings Out\13-0710 C700 Milpitas Station – RFC Submit\C700-S-DB-A524.dwg

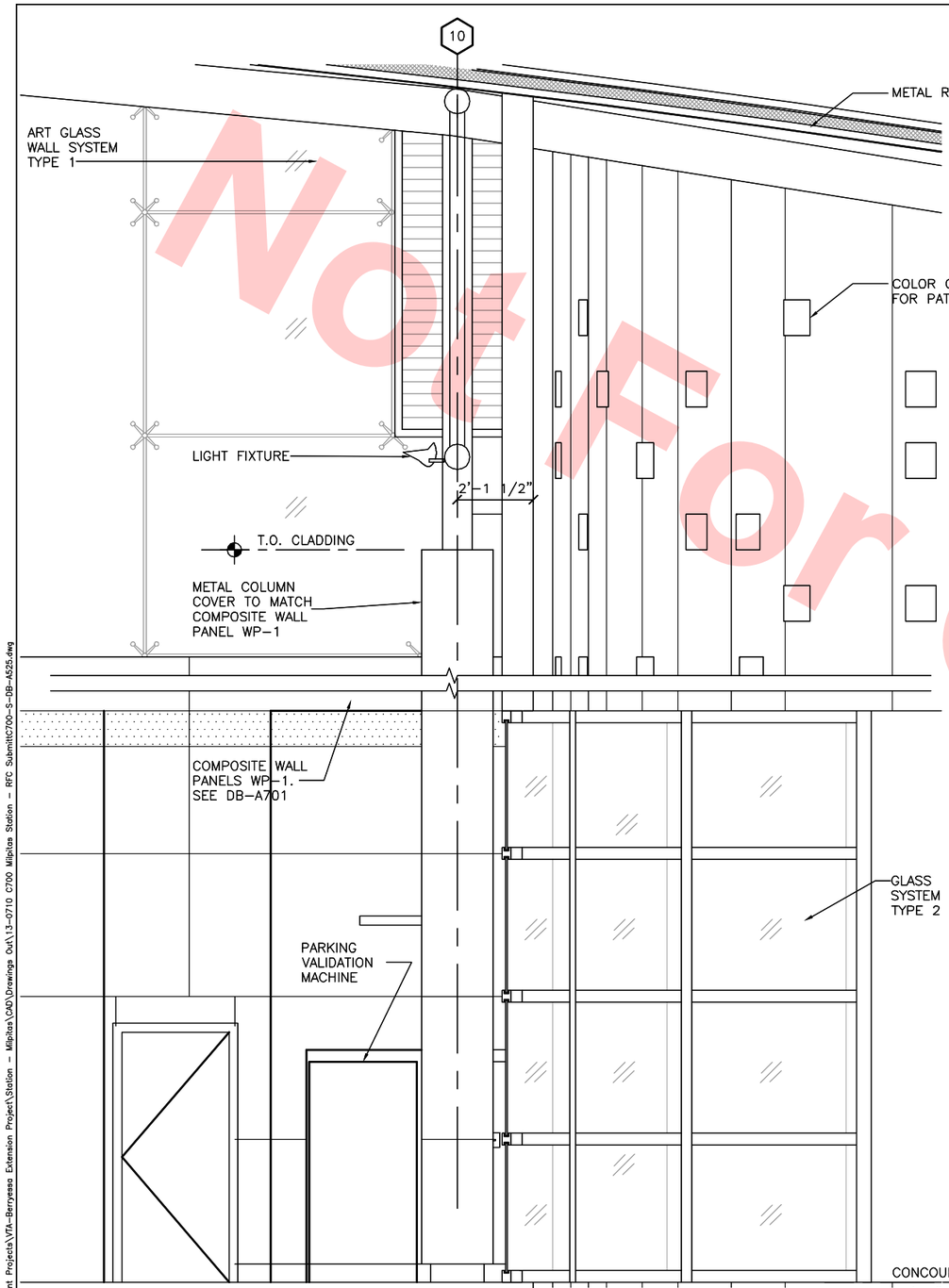

WALL SECTION 1 DB-A525 DB-A203
SCALE: 1/2" = 1'-0"

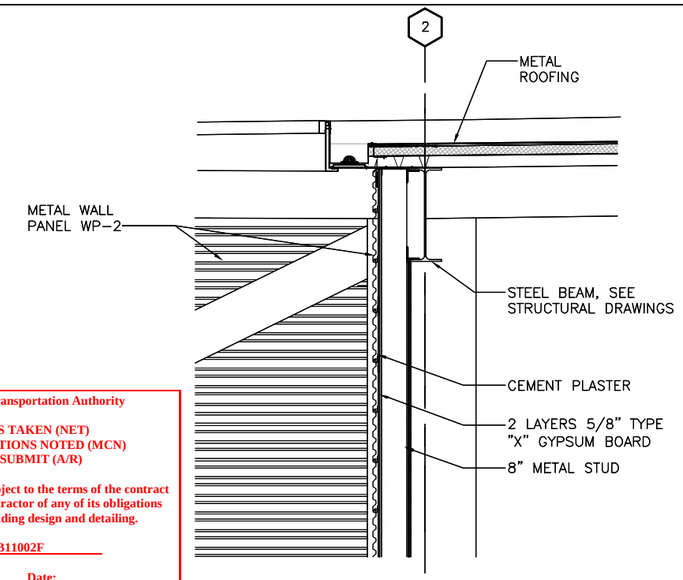

WALL SECTION 2 DB-A525 DB-A201
SCALE: 1/2" = 1'-0"

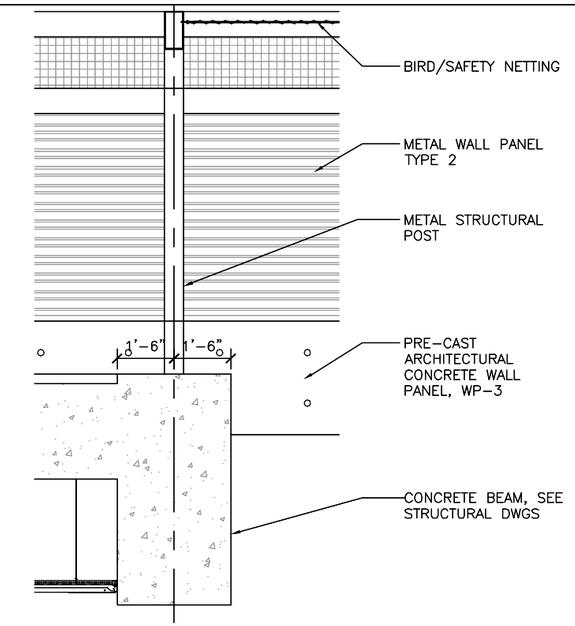

WALL SECTION 3 DB-A525 DB-A205
SCALE: 1/2" = 1'-0"

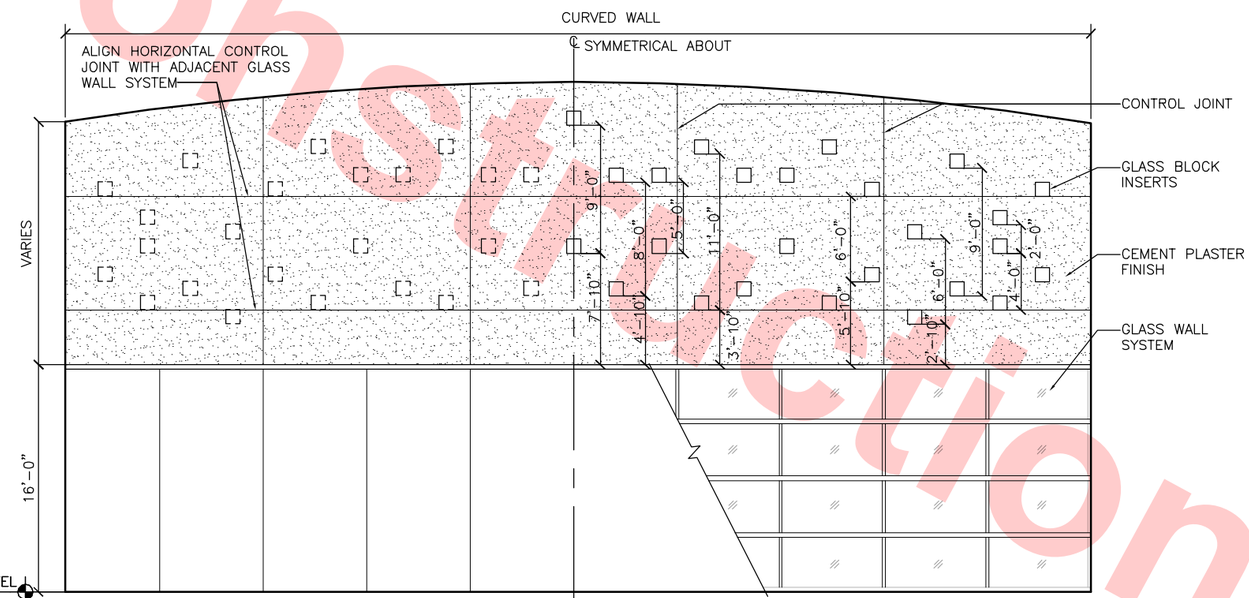

DECORATIVE WALL PATTERN 4 DB-A525 DB-A512
SCALE: 3/16" = 1'-0"

Not For Construction

REV	DATE	BY	SUB	APP	DESCRIPTION
0	20130710				READINESS FOR CONSTRUCTION

DESIGNED BY S. DEBNATH
DRAWN BY R. COLLADO
CHECKED BY E. BALLADA
IN CHARGE R. BARLAAN
DATE 20130710

LICENSED ARCHITECT SOMESH DEBNATH No. C21523 STATE OF CALIFORNIA

Skanska Shimmick Herzog
1436 California Circle
Milpitas, California 95035
A Joint Venture

Anil Verma Associates, Inc.
1970 Broadway, Suite 525, Oakland, CA 94612
Phone: (510) 835-2537 Fax: (510) 835-2339
SUBMITTED

Lockwood, Andrews & Newnam, Inc. A LEO A DALY COMPANY
T·Y·LIN INTERNATIONAL
APPROVED

VTA BART SILICON VALLEY
BART SILICON VALLEY BERRYESSA EXTENSION

LINE, TRACK, STATIONS AND SYSTEMS
DESIGN UNIT 023
MILPITAS STATION

WALL SECTIONS
SHEET 5 OF 7

CADD FILENAME C700-S-DB-A525.dwg
SIZE D | SCALE AS NOTED
CONTRACT NO. C700 | REV. 0
AREA CODE DB | SHEET NO. A525 | PAGE NO. 0451

Santa Clara Valley Transportation Authority

____NO EXCEPTIONS TAKEN (NET)
____MAKE CORRECTIONS NOTED (MCN)
____AMEND AND RESUBMIT (A/R)

Any action shown above is subject to the terms of the contract and does not relieve the Contractor of any of its obligations under the contract, including design and detailing.

Contract No.: DB11002F

By: _____ Date: _____

JosephG Jun 26, 2013 – 2:30pm G:\Current Projects\VTA-Berryessa Extension Project\Station – Milpitas\CAD\Drawings Out\13-0710 C700 Milpitas Station – RFC Submittal\C700-S-DB-A525.dwg

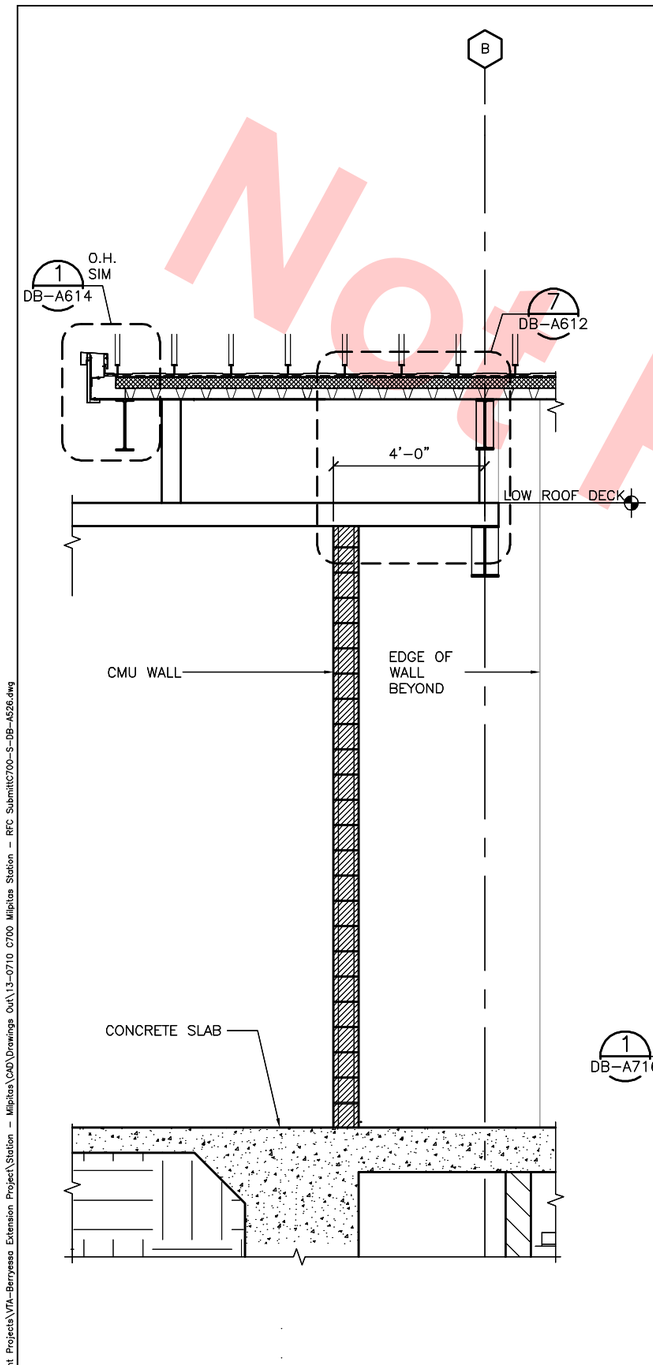

WALL SECTION
SCALE: 1/2" = 1'–0"
A
DB–A526
DB–A211

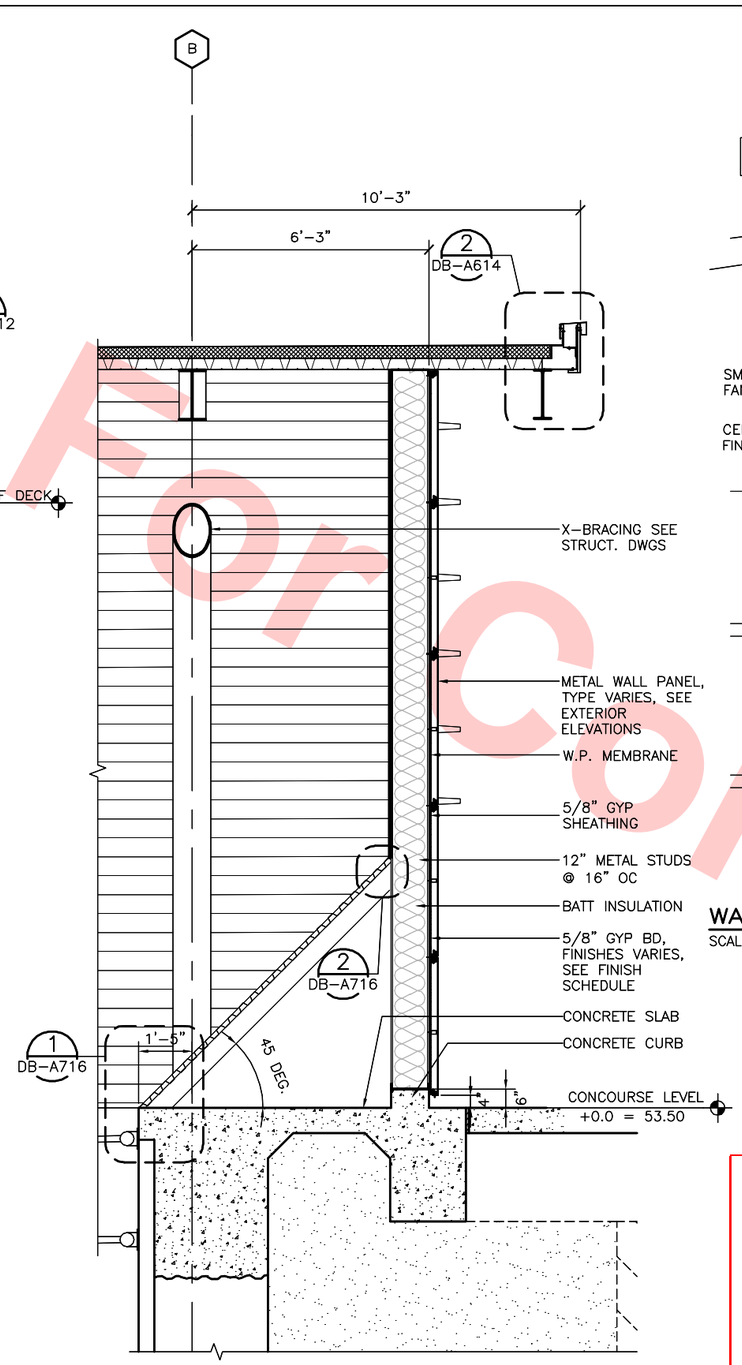

WALL SECTION
SCALE: 1/2" = 1'–0"
B
DB–A526
DB–A213

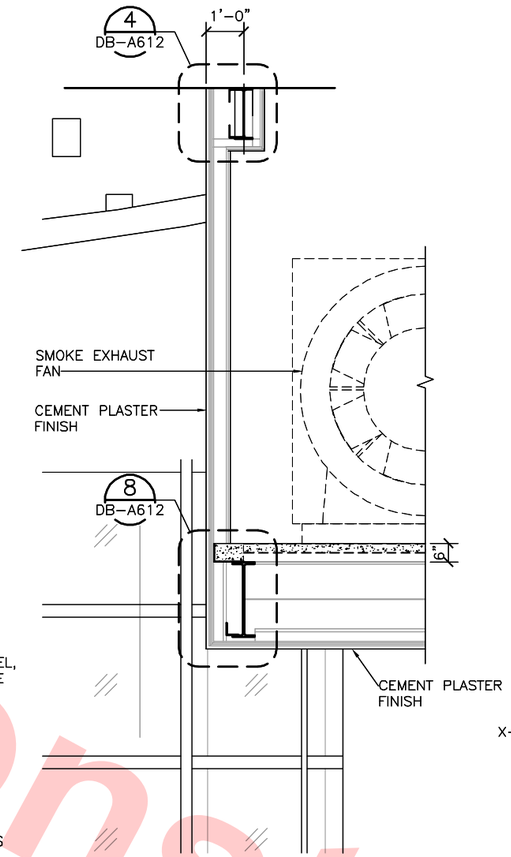

WALL SECTION
SCALE: 1/2" = 1'–0"
C
DB–A526
DB–A215

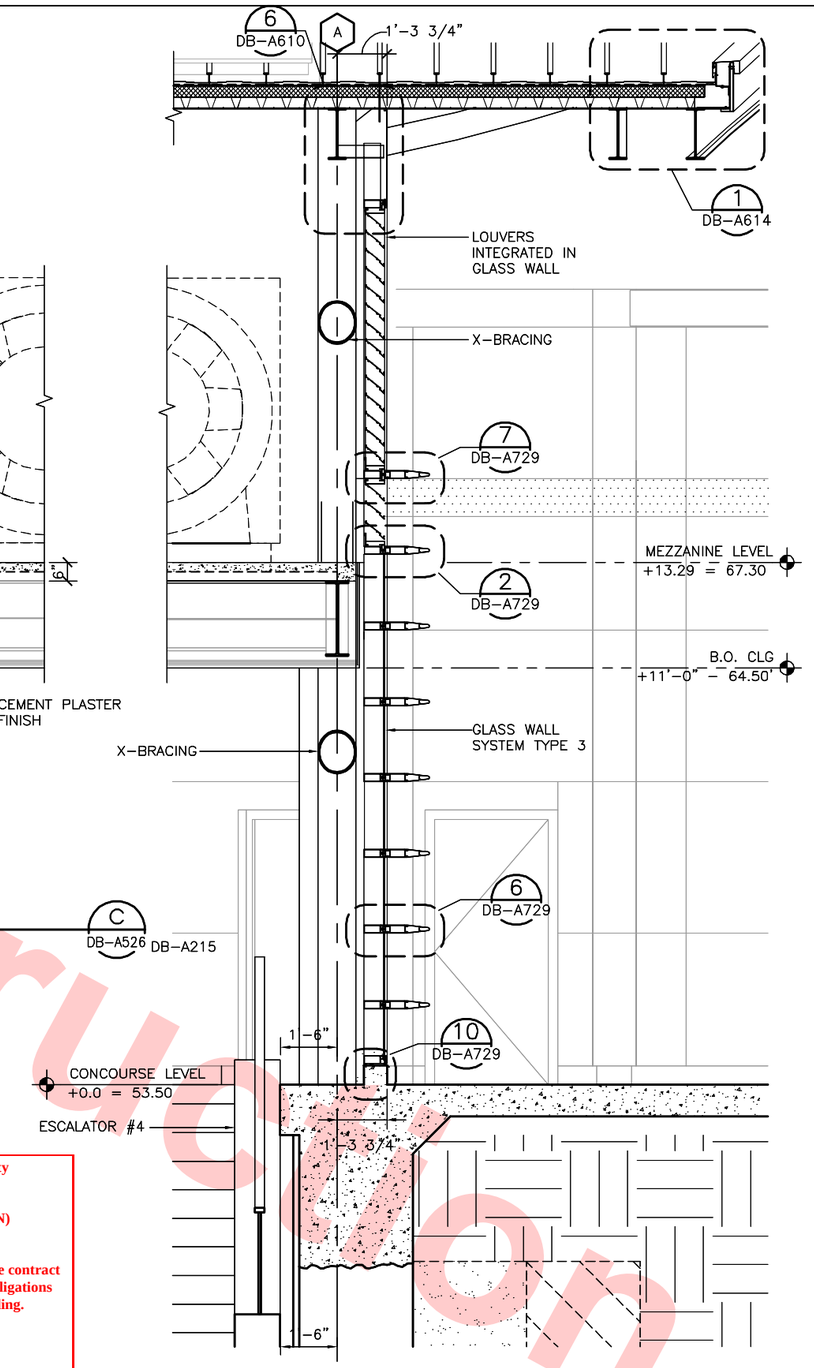

WALL SECTION
SCALE: 1/2" = 1'–0"
D
DB–A526
DB–A215

Santa Clara Valley Transportation Authority

____NO EXCEPTIONS TAKEN (NET)
____MAKE CORRECTIONS NOTED (MCN)
____AMEND AND RESUBMIT (A/R)

Any action shown above is subject to the terms of the contract and does not relieve the Contractor of any of its obligations under the contract, including design and detailing.

Contract No.: DB11002F

By: _____ Date: _____

Not For Construction

REV	DATE	BY	SUB	APP	DESCRIPTION
0	20130710				READINESS FOR CONSTRUCTION

DESIGNED BY S. DEBNATH
DRAWN BY R. COLLADO
CHECKED BY E. BALLADA
IN CHARGE R. BARLAAN
DATE 20130710

LICENSED ARCHITECT SURESH DEBNATH No. C21523 STATE OF CALIFORNIA

Skanska Shimmick Herzog
1436 California Circle
Milpitas, California 95035
A Joint Venture

Anil Verma Associates, Inc.
1970 Broadway, Suite 525, Oakland, CA 94612
Phone: (510) 835-2537 Fax: (510) 835-2339
SUBMITTED

Lockwood, Andrews & Newnam, Inc. A LEO A DALY COMPANY
T·Y·LIN INTERNATIONAL
APPROVED

VTA BART SILICON VALLEY
BART SILICON VALLEY BERRYESSA EXTENSION

LINE, TRACK, STATIONS AND SYSTEMS
DESIGN UNIT 023
MILPITAS STATION

WALL SECTIONS
SHEET 6 OF 7

CADD FILENAME C700–S–DB–A526.dwg
SIZE D | SCALE 1/2"=1'–0"
CONTRACT NO. C700 | REV. 0
AREA CODE DB | SHEET NO. A526 | PAGE NO. 0452

JosephG Jun 26, 2013 – 2:30pm G:\Current Projects\VTA–Berryessa Extension Project\Station – Milpitas\CAD\Drawings Out\13–0710 C700 Milpitas Station – RFC Submit\C700–S–DB–A526.dwg

Santa Clara Valley Transportation Authority

____NO EXCEPTIONS TAKEN (NET)
____MAKE CORRECTIONS NOTED (MCN)
____AMEND AND RESUBMIT (A/R)

Any action shown above is subject to the terms of the contract and does not relieve the Contractor of any of its obligations under the contract, including design and detailing.

Contract No.: DB11002F

By: _____ Date: _____

Not For Construction

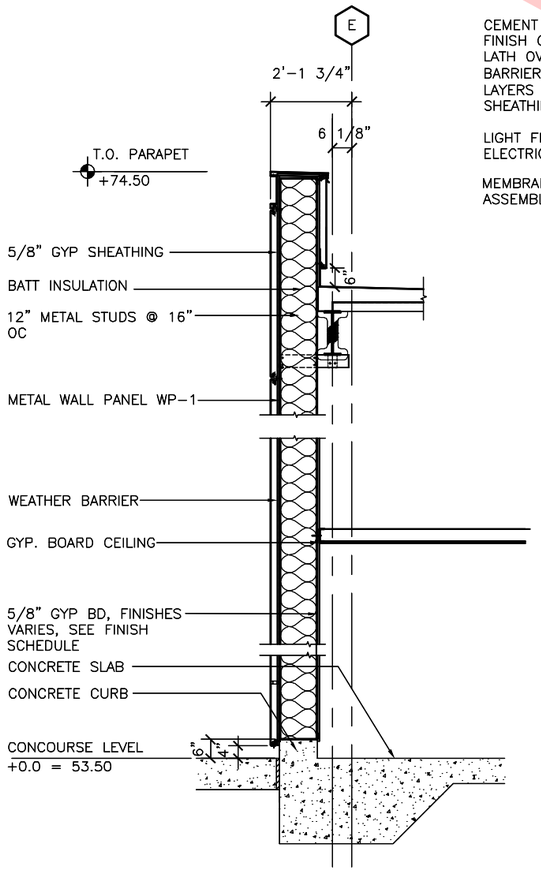

WALL SECTION A DB-A527 DB-A216
SCALE: 1/2" = 1'-0

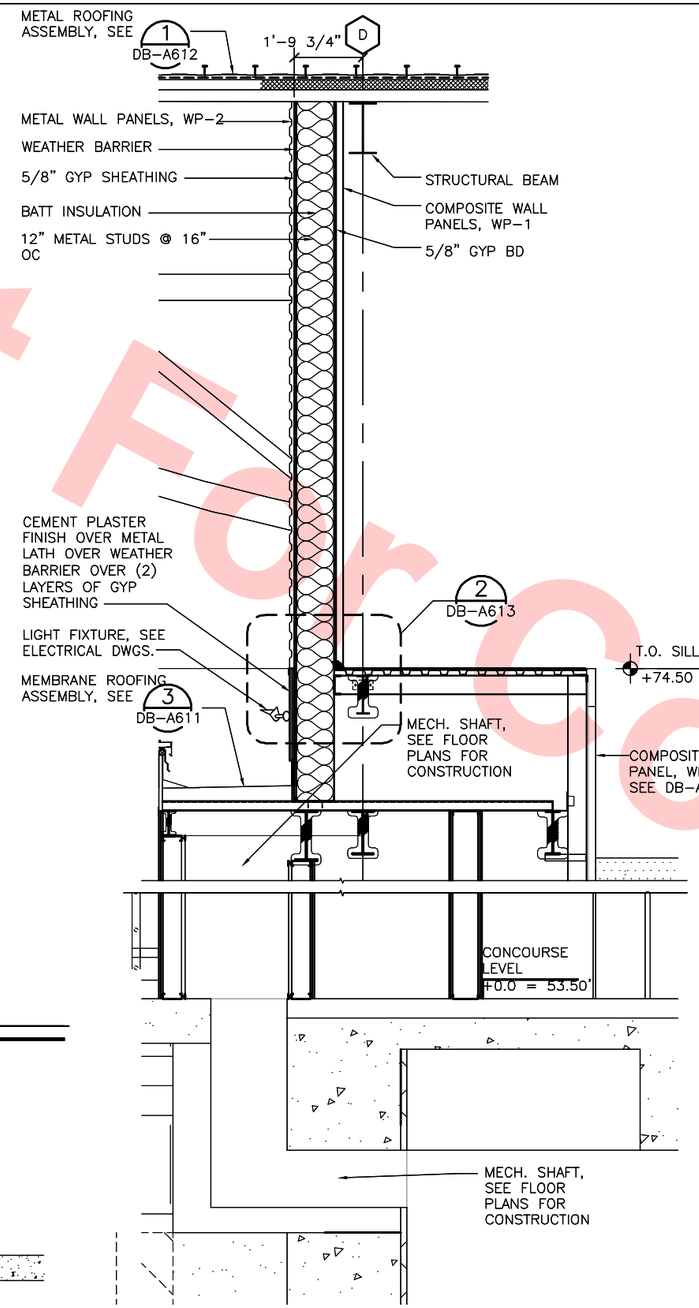

WALL SECTION B DB-A527 DB-A216
SCALE: 1/2" = 1'-0

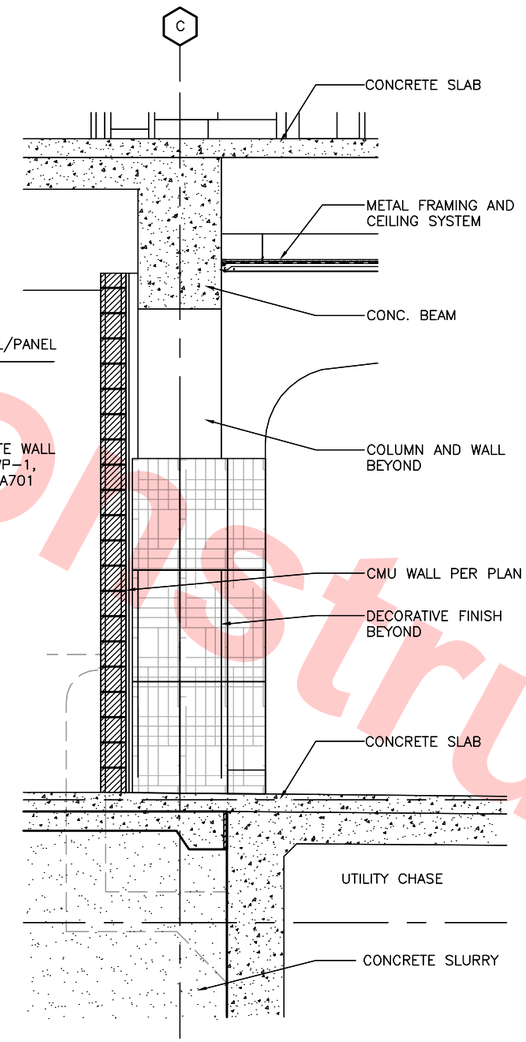

WALL SECTION C DB-A527 DB-A216
SCALE: 1/2" = 1'-0

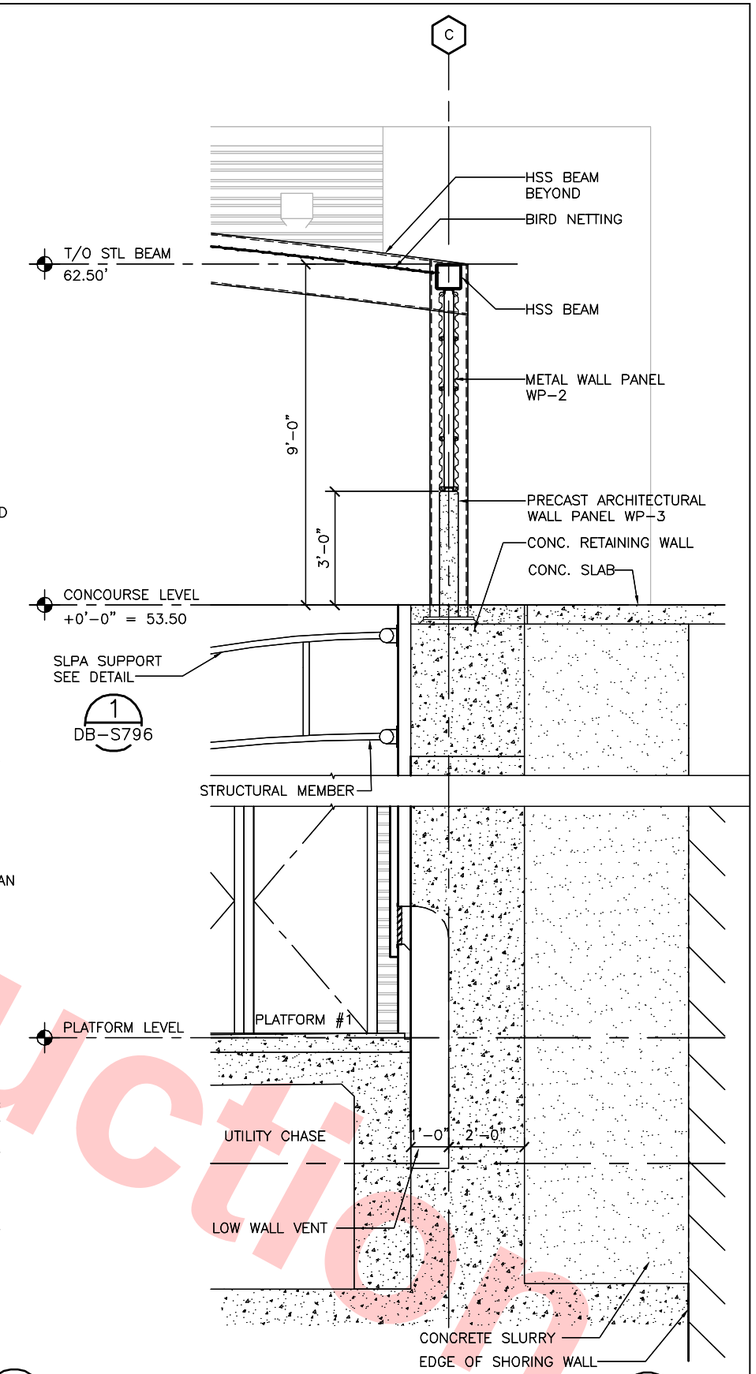

WALL SECTION D DB-A527 DB-A217
SCALE: 1/2" = 1'-0

REV	DATE	BY	SUB	APP	DESCRIPTION
0	20130710				READINESS FOR CONSTRUCTION

DESIGNED BY S. DEBNATH
DRAWN BY R. COLLADO
CHECKED BY E. BALLADA
IN CHARGE R. BARLAAN
DATE 20130710

LICENSED ARCHITECT SOMESH DEBNATH No. C21523 STATE OF CALIFORNIA

Skanska Shimmick Herzog
1436 California Circle
Milpitas, California 95035
A Joint Venture

Anil Verma Associates, Inc.
1970 Broadway, Suite 325
Oakland, CA 94612
Phone: (510) 535-2537 Fax: (510) 535-2339
SUBMITTED

Lockwood, Andrews & Newnam, Inc. A LEO A DALY COMPANY
T·Y·LIN INTERNATIONAL
APPROVED

VTA BART SILICON VALLEY
BART SILICON VALLEY BERRYESSA EXTENSION

LINE, TRACK, STATIONS AND SYSTEMS
DESIGN UNIT 023
MILPITAS STATION

WALL SECTIONS
SHEET 7 OF 7

CADD FILENAME C700-S-DB-A527.dwg
SIZE D | SCALE 1/2"=1'-0"
CONTRACT NO. C700 | REV. 0
AREA CODE DB | SHEET NO. A527 | PAGE NO. 0453

JosephG Jun 26, 2013 - 2:31pm G:\Current Projects\VTA-Berryessa Extension Project\Station - Milpitas\CAD\Drawings Out\13-0710 C700 Milpitas Station - RFC Submit\C700-S-DB-A527.dwg

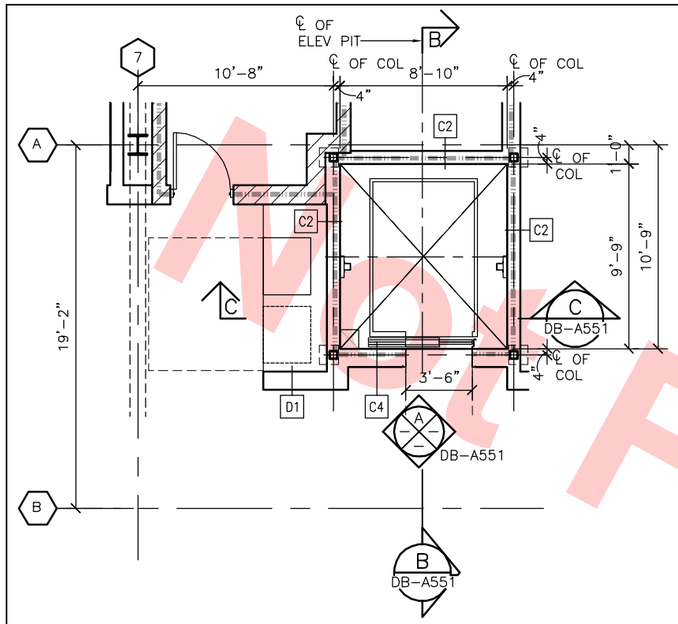

PLAN-ELEV #2 AT CONCOURSE (1 / DB-A551)

ELEV #1 SIM
SCALE: 1/4"=1'-0"

DB-A122X
DB-A123X

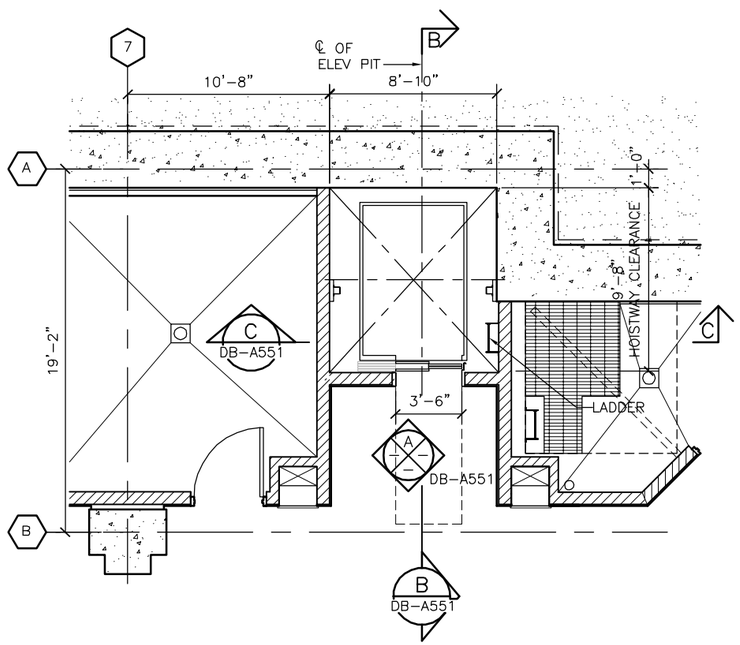

PLAN-ELEV #2 AT PLATFORM (2 / DB-A551)

ELEV #1 SIM
SCALE: 1/4"=1'-0"

DB-A112X

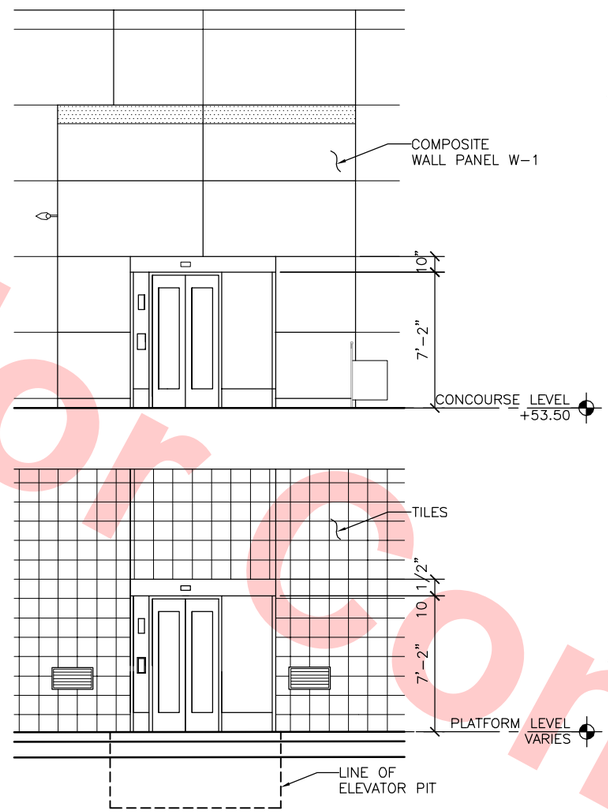

FRONT INTERIOR ELEVATION (A / DB-A551)

ELEV #1 SIM
SCALE: 1/4"=1'-0"

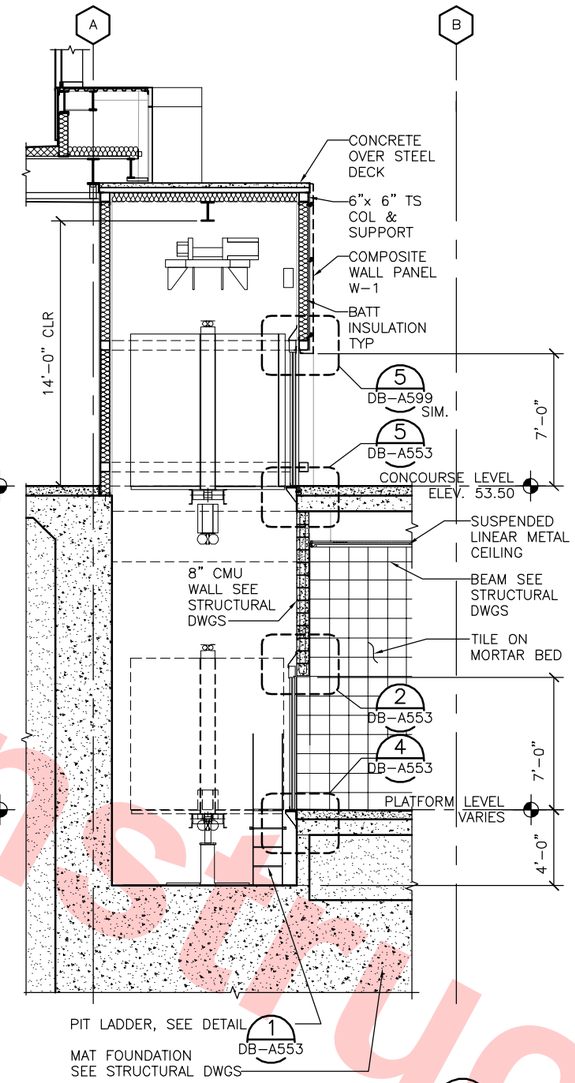

SECTION (B / DB-A551)

ELEV #1 SIM
SCALE: 1/4"=1'-0"

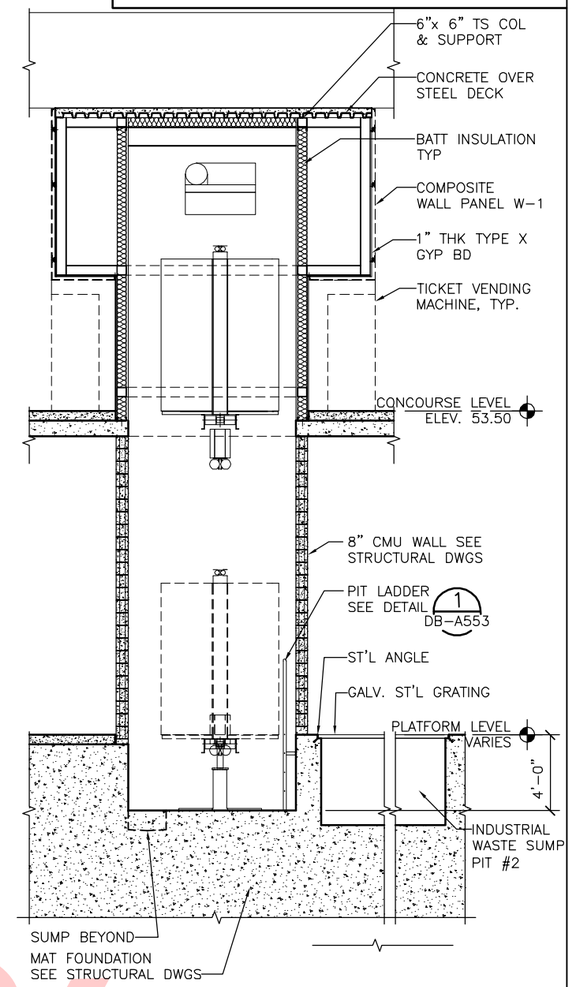

SECTION (C / DB-A551)

ELEV #1 SIM
SCALE: 1/4"=1'-0"

NOTE

FOR ELEVATOR CAR OPERATING PANEL DETAILS SEE BFS SHEETS AS08, AS09 & AS10

Santa Clara Valley Transportation Authority

____NO EXCEPTIONS TAKEN (NET)
____MAKE CORRECTIONS NOTED (MCN)
____AMEND AND RESUBMIT (A/R)

Any action shown above is subject to the terms of the contract and does not relieve the Contractor of any of its obligations under the contract, including design and detailing.

Contract No.: DB11002F

By: _____ **Date:** _____

1' 0' 1' 2' 3' 4' 5'
GRAPHIC SCALE

Not For Construction

REV	DATE	BY	SUB	APP	DESCRIPTION
0	20130710				READINESS FOR CONSTRUCTION

DESIGNED BY S. DEBNATH
DRAWN BY R. COLLADO
CHECKED BY E. BALLADA
IN CHARGE R. BARLAAN
DATE 20130710

LICENSED ARCHITECT SANJESH DEBNATH No. C21523 STATE OF CALIFORNIA

Skanska Shimmick Herzog
1436 California Circle
Milpitas, California 95035
A Joint Venture

Anil Verma Associates, Inc.
1970 Broadway, Suite 525 Oakland, CA 94612
Phone: (510) 835-2537 Fax: (510) 835-2339
SUBMITTED

Lockwood, Andrews & Newnam, Inc. A LAN & BAYH COMPANY
T·Y·LIN INTERNATIONAL
APPROVED

VTA BART SILICON VALLEY
BART SILICON VALLEY BERRYESSA EXTENSION

LINE, TRACK, STATIONS AND SYSTEMS
DESIGN UNIT 023
MILPITAS STATION
ELEVATOR #2 (ELEV #1 SIM)
ENLARGED PLANS, INT ELEV & SECTIONS

CADD FILENAME C700-S-DB-A551.dwg
SIZE D | SCALE AS NOTED
CONTRACT NO. C700 | REV. 0
AREA CODE DB | SHEET NO. A551 | PAGE NO. 0454

JosephG Jun 26, 2013 - 2:32pm G:\Current Projects\VTA-Berryessa Extension Project\Station - Milpitas\CAD\Drawings Out\13-0710 C700 Milpitas Station - RFC Submit\C700-S-DB-A551.dwg

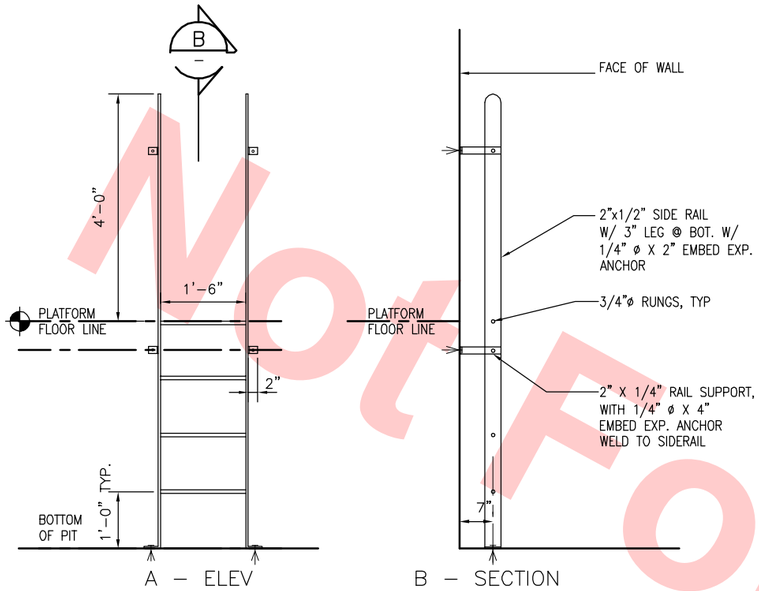

ELEVATOR PIT LADDER (1) DB–A553

SCALE: 1 1/2"=1'–0" DB–A551

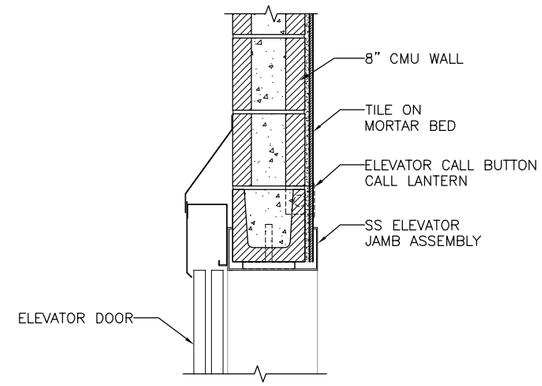

ELEVATOR HEAD @ PLATFORM LEVEL (2) DB–A553

SCALE: 1 1/2"=1'–0" DB–A551

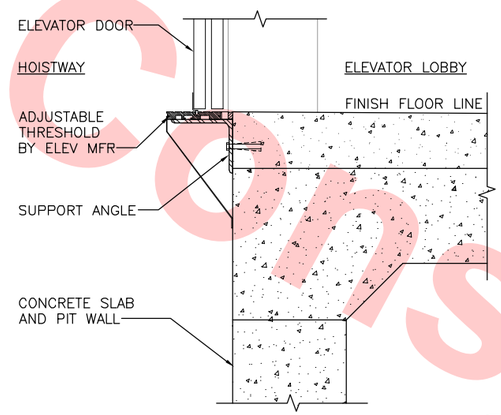

ELEVATOR SILL @ PLATFORM LEVEL (4) DB–A553

SCALE: 1 1/2"=1'–0" DB–A551

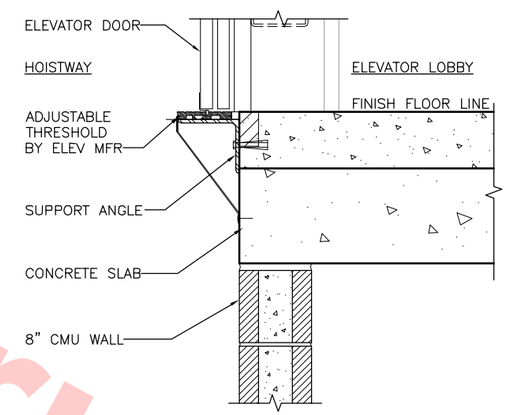

ELEVATOR SILL @ CONCOURSE LEVEL (5) DB–A553

SCALE: 1 1/2"=1'–0" DB–A551

Santa Clara Valley Transportation Authority

____NO EXCEPTIONS TAKEN (NET)
____MAKE CORRECTIONS NOTED (MCN)
____AMEND AND RESUBMIT (A/R)

Any action shown above is subject to the terms of the contract and does not relieve the Contractor of any of its obligations under the contract, including design and detailing.

Contract No.: DB11002F

By: _____ Date: _____

Not For Construction

REV	DATE	BY	SUB	APP	DESCRIPTION
0	20130710				READINESS FOR CONSTRUCTION

DESIGNED BY S. DEBNATH
DRAWN BY R. COLLADO
CHECKED BY E. BALLADA
IN CHARGE R. BARLAAN
DATE 20130710

LICENSED ARCHITECT SOMESH DEBNATH No. C21523 STATE OF CALIFORNIA

Skanska Shimmick Herzog
1436 California Circle
Milpitas, California 95035
A Joint Venture

Anil Verma Associates, Inc.
1970 Broadway, Suite 525, Oakland, CA 94612
Phone: (510) 835-2537 Fax: (510) 835-2339
SUBMITTED

Lockwood, Andrews & Newnam, Inc. A LEO A DALY COMPANY
T·Y·LIN INTERNATIONAL
APPROVED

VTA BART SILICON VALLEY
BART SILICON VALLEY BERRYESSA EXTENSION

LINE, TRACK, STATIONS AND SYSTEMS
DESIGN UNIT 023
MILPITAS STATION

ELEVATOR DETAILS

CADD FILENAME C700–S–DB–A553.dwg
SIZE D | SCALE 1 1/2"=1'–0"
CONTRACT NO. C700 | REV. 0
AREA CODE DB | SHEET NO. A553 | PAGE NO. 0455

JosephG Jun 26, 2013 – 2:33pm G:\Current Projects\VTA-Berryessa Extension Project\Station – Milpitas\CAD\Drawings Out\13-0710 C700 Milpitas Station – RFC Submit\C700-S-DB-A553.dwg

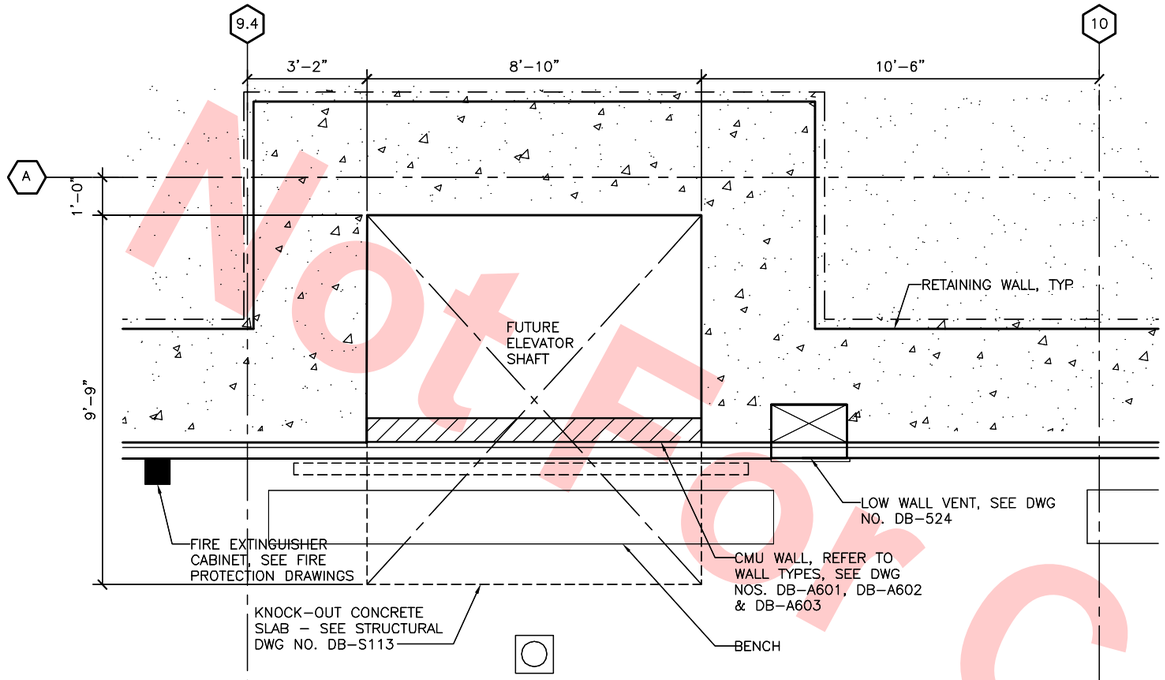

SHAFT FOR FUTURE ELEVATOR @ PLATFORM LEVEL (1 / DB-A554)

SCALE: 1/2" = 1'-0"

DB-A113X

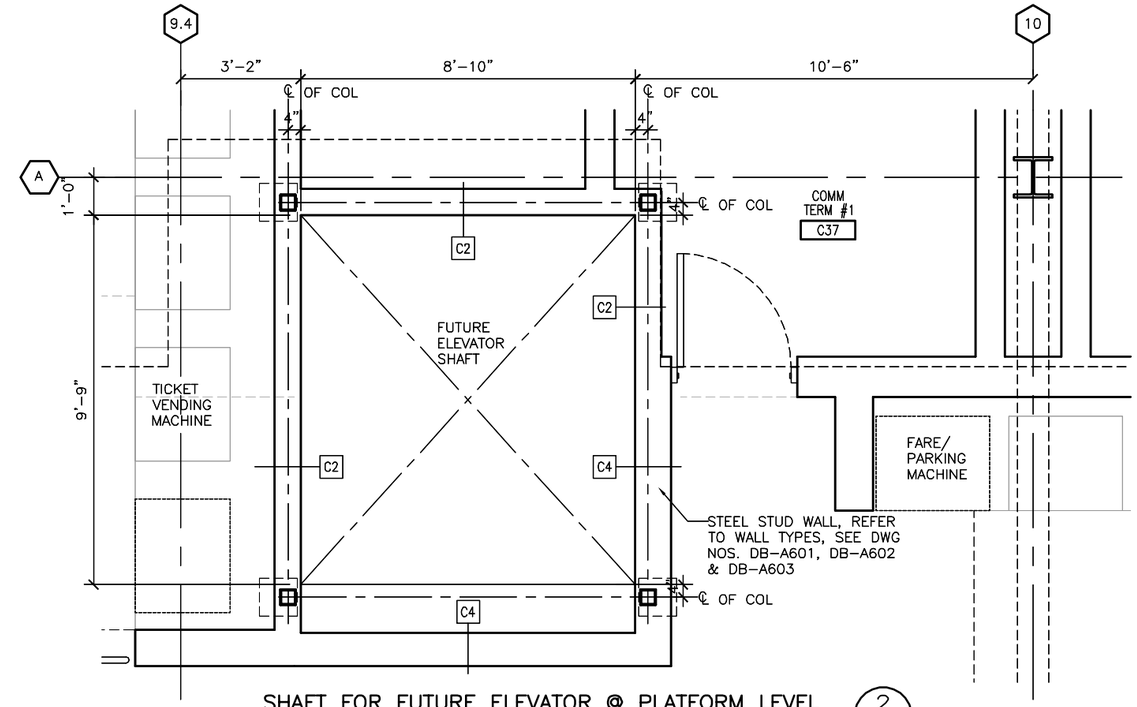

SHAFT FOR FUTURE ELEVATOR @ PLATFORM LEVEL (2 / DB-A554)

SCALE: 1/2" = 1'-0"

DB-A124X
DB-A125X

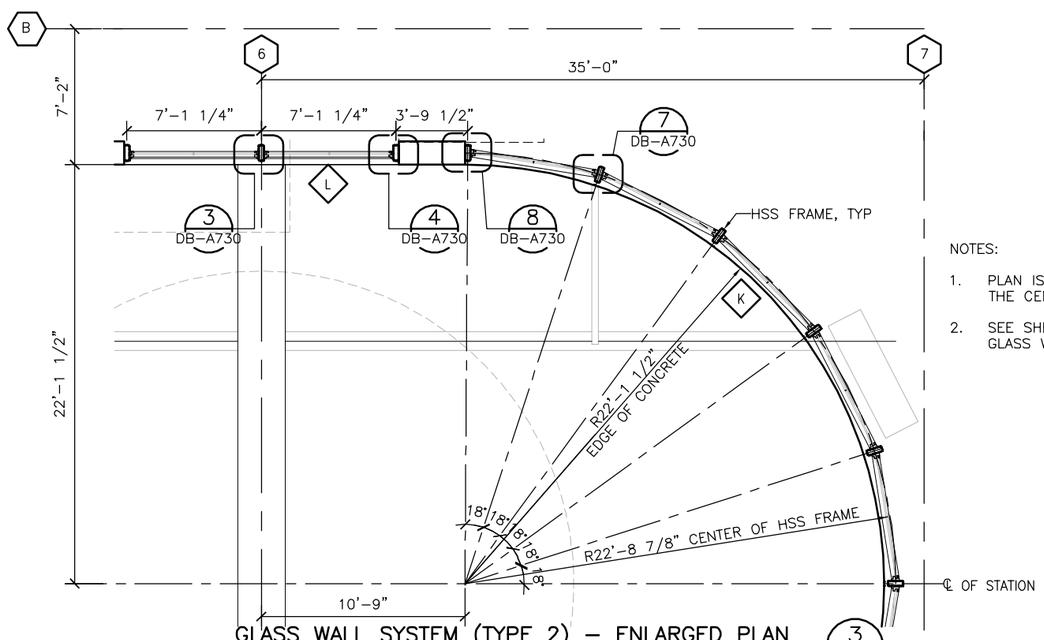

GLASS WALL SYSTEM (TYPE 2) - ENLARGED PLAN (3 / DB-A554)

SCALE: 1/4" = 1'-0"

DB-A122X

NOTES:

1. PLAN IS SYMMETRICAL ABOUT THE CENTER LINE OF STATION
2. SEE SHEET DB-A722 FOR GLASS WALL SYSTEM SCHEDULE

Santa Clara Valley Transportation Authority

____NO EXCEPTIONS TAKEN (NET)
____MAKE CORRECTIONS NOTED (MCN)
____AMEND AND RESUBMIT (A/R)

Any action shown above is subject to the terms of the contract and does not relieve the Contractor of any of its obligations under the contract, including design and detailing.

Contract No.: DB11002F

By: _____ **Date:** _____

Not For Construction

REV	DATE	BY	SUB	APP	DESCRIPTION
0	20130710				READINESS FOR CONSTRUCTION

DESIGNED BY S. DEBNATH
DRAWN BY R. COLLADO
CHECKED BY E. BALLADA
IN CHARGE R. BARLAAN
DATE 20130710

LICENSED ARCHITECT SOMESH DEBNATH No. C21523 STATE OF CALIFORNIA

Skanska Shimmick Herzog
1436 California Circle
Milpitas, California 95035
A Joint Venture

Anil Verma Associates, Inc.
1970 Broadway, Suite 225, Oakland, CA 94612
Phone: (510) 835-2537 Fax: (510) 835-2339
SUBMITTED

Lockwood, Andrews & Newnam, Inc. — A LED A BALY COMPANY
T·Y·LIN INTERNATIONAL
APPROVED

VTA BART SILICON VALLEY
BART SILICON VALLEY BERRYESSA EXTENSION

LINE, TRACK, STATIONS AND SYSTEMS
DESIGN UNIT 023
MILPITAS STATION
FUTURE ELEVATOR &
GLASS WALL SYSTEM (TYPE 2)
ENLARGED PLANS

CADD FILENAME C700-S-DB-A554.dwg
SIZE D | SCALE 1/2"=1'-0"
CONTRACT NO. C700 | REV. 0
AREA CODE DB | SHEET NO. A554 | PAGE NO. 0456

JosephG Jun 26, 2013 - 2:34pm G:\Current Projects\VTA-Berryessa Extension Project\Station - Milpitas\CAD\Drawings Out\13-0710 C700 Milpitas Station - RFC Submit\C700-S-DB-A554.dwg

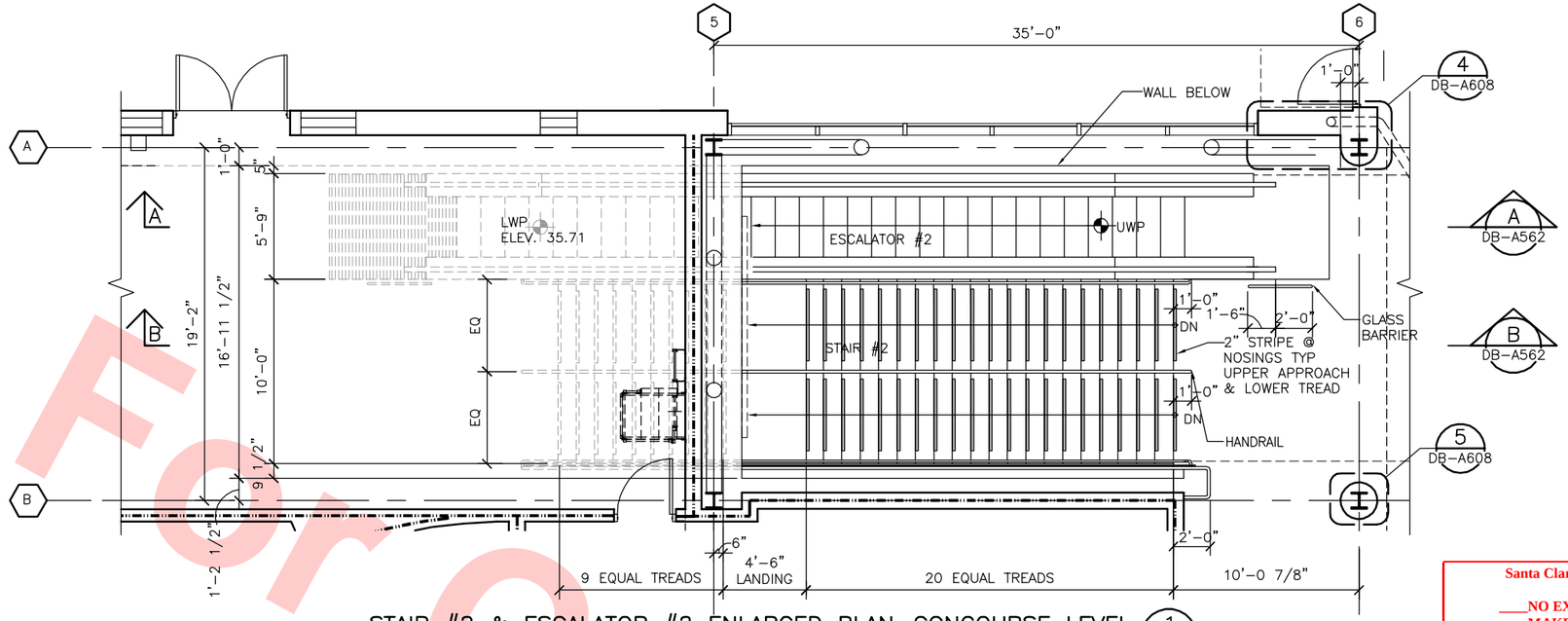

STAIR #2 & ESCALATOR #2 ENLARGED PLAN–CONCOURSE LEVEL (1) DB-A561 DB-A122X

SCALE: 1/4"=1'-0" STAIR #1 AND ESCALATOR #1 OH

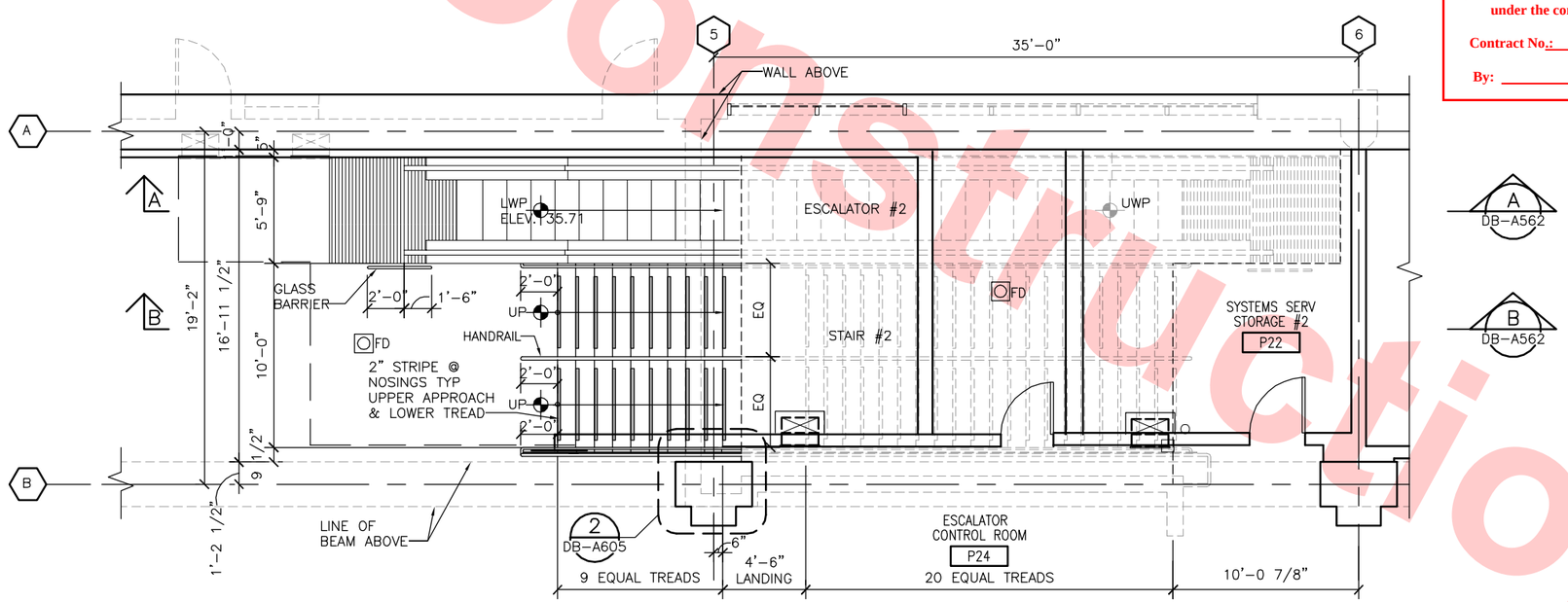

STAIR #2 & ESCALATOR #2 ENLARGED PLAN–PLATFORM LEVEL (2) DB-A561 DB-A112X

SCALE: 1/4"=1'-0" STAIR #1 AND ESCALATOR #1 OH

Santa Clara Valley Transportation Authority

____NO EXCEPTIONS TAKEN (NET)
____MAKE CORRECTIONS NOTED (MCN)
____AMEND AND RESUBMIT (A/R)

Any action shown above is subject to the terms of the contract and does not relieve the Contractor of any of its obligations under the contract, including design and detailing.

Contract No.: DB11002F

By: _____ Date: _____

Not For Construction

REV	DATE	BY	SUB	APP	DESCRIPTION
0	20130710				READINESS FOR CONSTRUCTION

DESIGNED BY S. DEBNATH
DRAWN BY R. COLLADO
CHECKED BY E. BALLADA
IN CHARGE R. BARLAAN
DATE 20130710

LICENSED ARCHITECT SOMESH DEBNATH No. C21523 STATE OF CALIFORNIA

Skanska Shimmick Herzog
1436 California Circle
Milpitas, California 95035
A Joint Venture

Anil Verma Associates, Inc.
1970 Broadway, Suite 555, Oakland, CA 94612
Phone: (510) 835-2537 Fax: (510) 835-2339

Lockwood, Andrews & Newnam, Inc. A LEO A DALY COMPANY

T·Y·LIN INTERNATIONAL

SUBMITTED _____ APPROVED _____

VTA BART SILICON VALLEY
BART SILICON VALLEY BERRYESSA EXTENSION

LINE, TRACK, STATIONS AND SYSTEMS
DESIGN UNIT 023
MILPITAS STATION

STAIR #2 AND ESCALATOR #2 ENLARGED PLANS
(STAIR #1 AND ESCALATOR #1 OH SIMILAR)

CADD FILENAME C700-S-DB-A561.dwg
SIZE D | SCALE 1/4"=1'-0"
CONTRACT NO. C700 | REV. 0
AREA CODE DB | SHEET NO. A561 | PAGE NO. 0457

JosephG Jun 26, 2013 – 2:35pm G:\Current Projects\VTA-Berryessa Extension Project\Station – Milpitas\CAD\Drawings Out\13-0710 C700 Milpitas Station – RFC Submit\C700-S-DB-A561.dwg

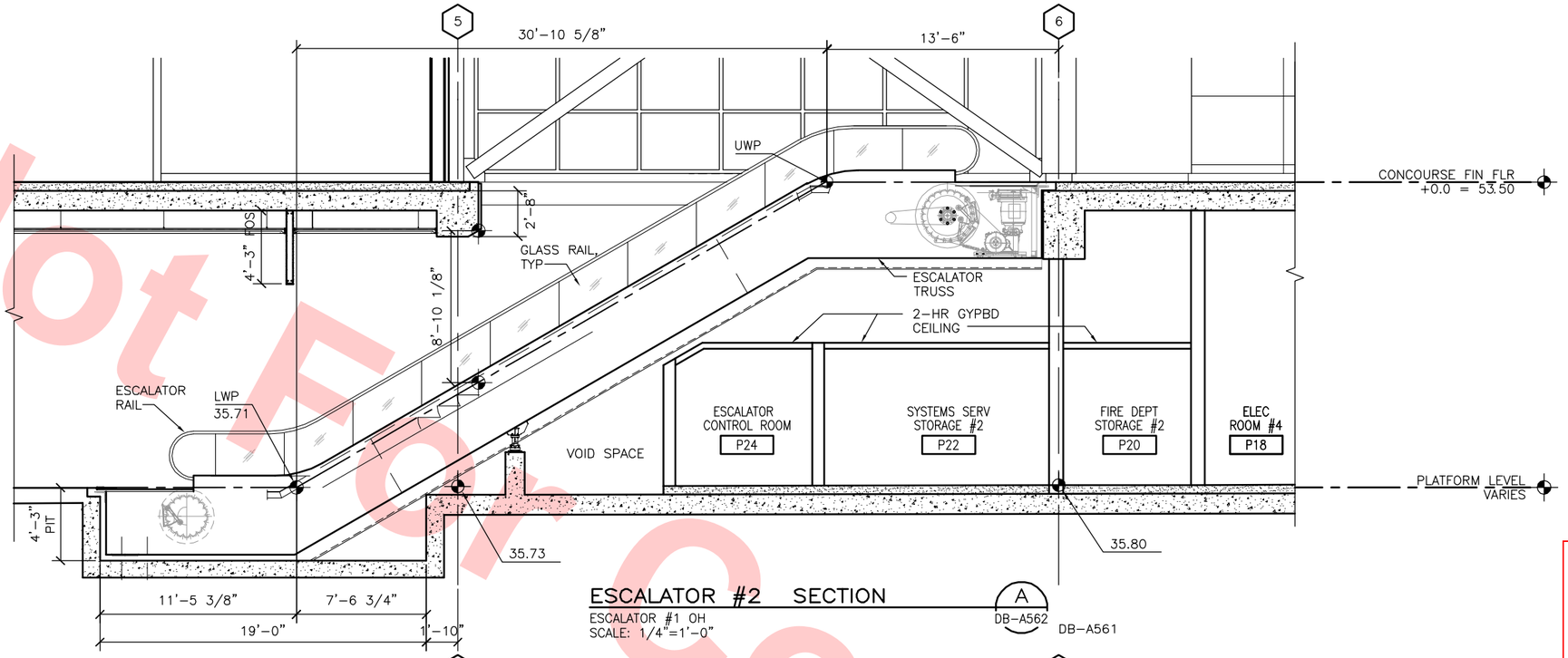

ESCALATOR #2 SECTION

ESCALATOR #1 OH
SCALE: 1/4"=1'-0"

A
DB-A562 DB-A561

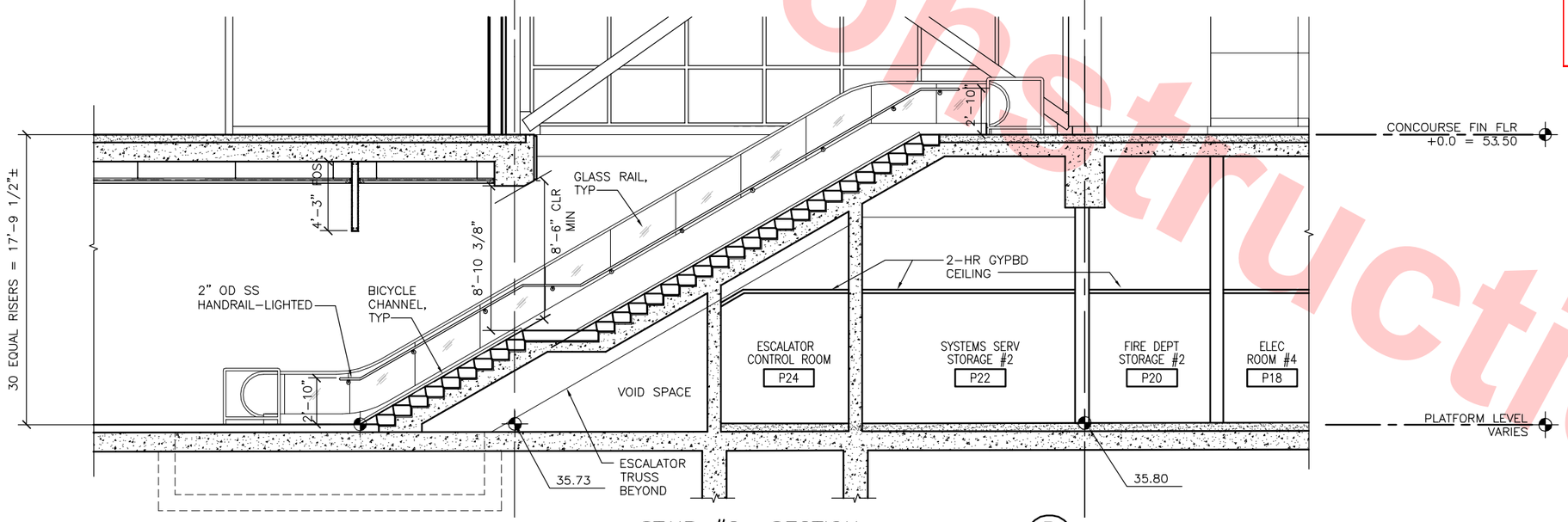

STAIR #2 SECTION

STAIR #1 OH
SCALE: 1/4"=1'-0"

B
DB-A562 DB-A561

Santa Clara Valley Transportation Authority

____NO EXCEPTIONS TAKEN (NET)
____MAKE CORRECTIONS NOTED (MCN)
____AMEND AND RESUBMIT (A/R)

Any action shown above is subject to the terms of the contract and does not relieve the Contractor of any of its obligations under the contract, including design and detailing.

Contract No.: DB11002F

By: _____ **Date:** _____

Not For Construction

REV	DATE	BY	SUB	APP	DESCRIPTION
0	20130710				READINESS FOR CONSTRUCTION

DESIGNED BY S. DEBNATH
DRAWN BY R. COLLADO
CHECKED BY E. BALLADA
IN CHARGE R. BARLAAN
DATE 20130710

LICENSED ARCHITECT SOMESH DEBNATH No. C21523 STATE OF CALIFORNIA

Skanska Shimmick Herzog
1436 California Circle
Milpitas, California 95035
A Joint Venture

Anil Verma Associates, Inc.
1970 Broadway, Suite 525 Oakland, CA 94612
Phone: (510) 835-2537 Fax: (510) 535-2339

Lockwood, Andrews & Newnam, Inc. A LAN & BALL COMPANY
T·Y·LIN INTERNATIONAL

SUBMITTED _____ APPROVED _____

VTA BART SILICON VALLEY
BART SILICON VALLEY BERRYESSA EXTENSION

LINE, TRACK, STATIONS AND SYSTEMS
DESIGN UNIT 023
MILPITAS STATION

STAIR AND ESCALATOR #2 SECTIONS
(STAIR AND ESCALATOR #1 O.H. SIMILAR)

CADD FILENAME C700-S-DB-A562.dwg
SIZE D | SCALE 1/4"=1'-0"
CONTRACT NO. C700 | REV. 0
AREA CODE DB | SHEET NO. A562 | PAGE NO. 0458

JosephG Jun 26, 2013 - 2:36pm G:\Current Projects\VTA-Berryessa Extension Project\Station - Milpitas\CAD\Drawings Out\13-0710 C700 Milpitas Station - RFC Submit\C700-S-DB-A562.dwg

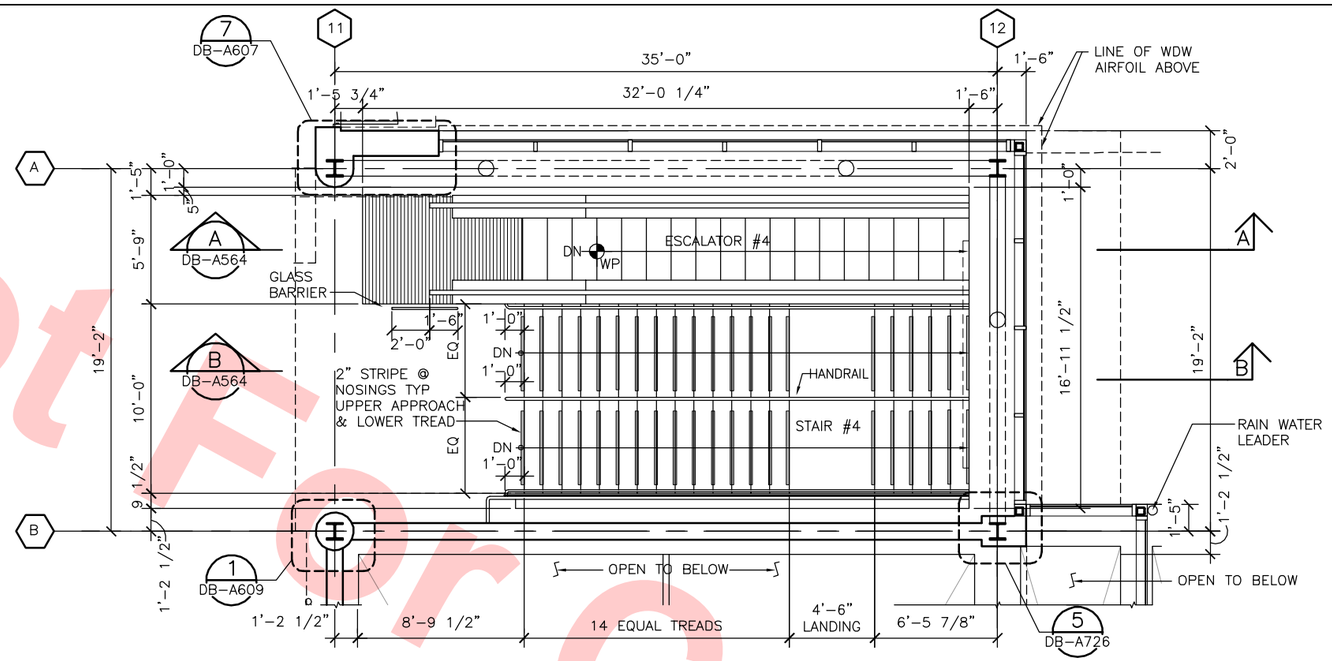

STAIR #4 AND ESCALATOR #4 ENLARGED PLAN–CONCOURSE LEVEL (1)

SCALE: 1/4"=1'-0" STAIR #3 AND ESCALATOR #3 OH

DB-A563
DB-A124X

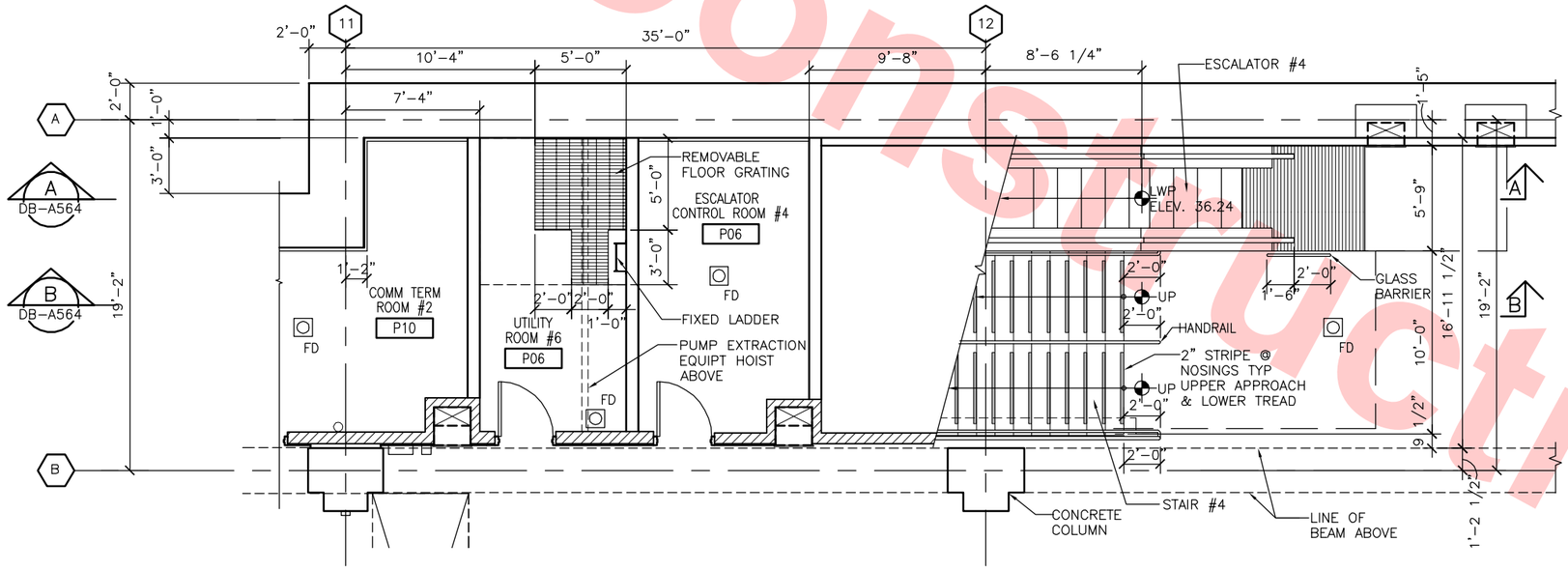

STAIR #4 AND ESCALATOR #4 ENLARGED PLAN–PLATFORM LEVEL (2)

SCALE: 1/4"=1'-0" STAIR #3 AND ESCALATOR #3 OH

DB-A563
DB-A113X
DB-A114X

Not For Construction

Santa Clara Valley Transportation Authority

____NO EXCEPTIONS TAKEN (NET)
____MAKE CORRECTIONS NOTED (MCN)
____AMEND AND RESUBMIT (A/R)

Any action shown above is subject to the terms of the contract and does not relieve the Contractor of any of its obligations under the contract, including design and detailing.

Contract No.: DB11002F

By: _____ Date: _____

REV	DATE	BY	SUB	APP	DESCRIPTION
0	20130710				READINESS FOR CONSTRUCTION

DESIGNED BY S. DEBNATH
DRAWN BY RC/EAB
CHECKED BY E. BALLADA
IN CHARGE R. BARLAAN
DATE 20130710

LICENSED ARCHITECT SOMESH DEBNATH No. C21523 STATE OF CALIFORNIA

Skanska Shimmick Herzog
1436 California Circle
Milpitas, California 95035
A Joint Venture

Anil Verma Associates, Inc.
1970 Broadway, Suite 525 Oakland, CA 94612
Phone: (510) 835-2537 Fax: (510) 835-2339
SUBMITTED

Lockwood, Andrews & Newnam, Inc. A LAN & NAV COMPANY
T·Y·LIN INTERNATIONAL
APPROVED

VTA BART SILICON VALLEY
BART SILICON VALLEY BERRYESSA EXTENSION

LINE, TRACK, STATIONS AND SYSTEMS
DESIGN UNIT 023
MILPITAS STATION

STAIR #4 AND ESCALATOR #4 ENLARGED PLANS
(STAIR #3 AND ESCALATOR #3 OH SIMILAR)

CADD FILENAME C700-S-DB-A563.dwg
SIZE D | SCALE 1/4"=1'-0"
CONTRACT NO. C700 | REV. 0
AREA CODE DB | SHEET NO. A563 | PAGE NO. 0459

JosephG Jun 26, 2013 – 2:37pm G:\Current Projects\VTA-Berryessa Extension Project\Station – Milpitas\CAD\Drawings Out\13-0710 C700 Milpitas Station – RFC Submit\C700-S-DB-A563.dwg

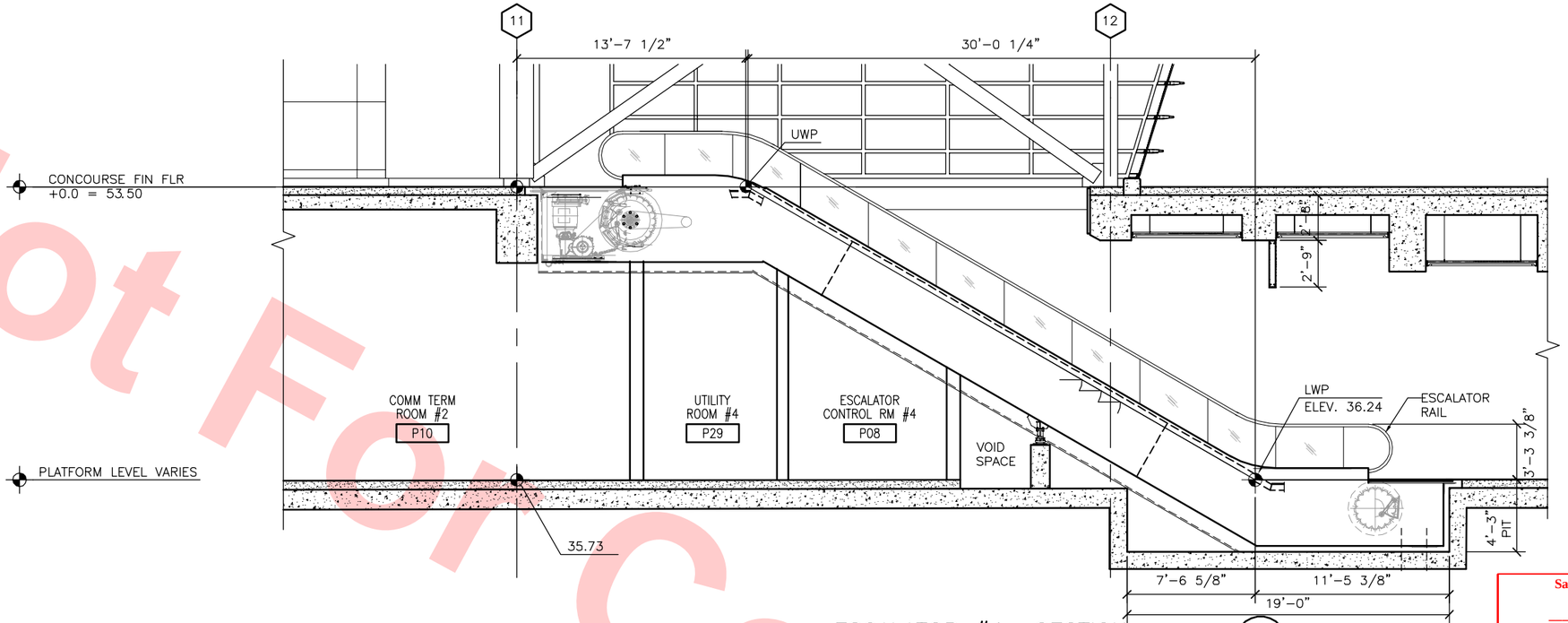

ESCALATOR #4 SECTION (A) DB-A564 DB-A563

ESCALATOR #3 OH
SCALE: 1/4"=1'-0"

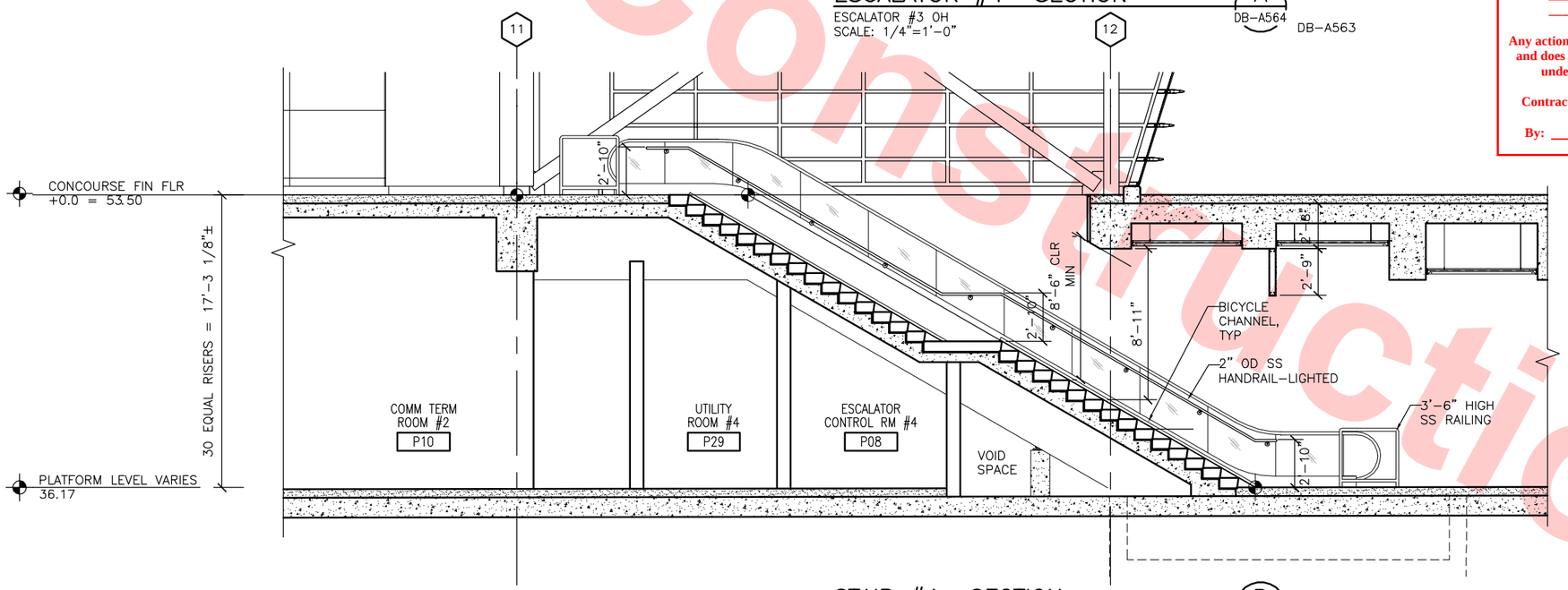

STAIR #4 SECTION (B) DB-A564 DB-A563

STAIR #3 OH
SCALE: 1/4"=1'-0"

Santa Clara Valley Transportation Authority

____NO EXCEPTIONS TAKEN (NET)
____MAKE CORRECTIONS NOTED (MCN)
____AMEND AND RESUBMIT (A/R)

Any action shown above is subject to the terms of the contract and does not relieve the Contractor of any of its obligations under the contract, including design and detailing.

Contract No.: DB11002F

By: _____ Date: _____

Not For Construction

REV	DATE	BY	SUB	APP	DESCRIPTION
0	20130710				READINESS FOR CONSTRUCTION

DESIGNED BY S. DEBNATH
DRAWN BY R. COLLADO
CHECKED BY E. BALLADA
IN CHARGE R. BARLAAN
DATE 20130710

LICENSED ARCHITECT SOMESH DEBNATH No. C21523 STATE OF CALIFORNIA

Skanska Shimmick Herzog
1436 California Circle
Milpitas, California 95035
A Joint Venture

Anil Verma Associates, Inc.
1970 Broadway, Suite 535 Oakland, CA 94612
Phone: (510) 835-2537 Fax: (510) 835-2339
SUBMITTED

Lockwood, Andrews & Newnam, Inc. A LIMA + NAVY COMPANY
T·Y·LIN INTERNATIONAL
APPROVED

VTA BART SILICON VALLEY
BART SILICON VALLEY BERRYESSA EXTENSION

LINE, TRACK, STATIONS AND SYSTEMS
DESIGN UNIT 023
MILPITAS STATION

STAIR AND ESCALATOR #4 SECTIONS
(STAIR AND ESCALATOR #3 O.H. SIMILAR)

CADD FILENAME C700-S-DB-A564.dwg
SIZE D | SCALE 1/4"=1'-0"
CONTRACT NO. C700 | REV. 0
AREA CODE DB | SHEET NO. A564 | PAGE NO. 0460

JosephG Jun 26, 2013 – 2:38pm G:\Current Projects\VTA-Berryessa Extension Project\Station – Milpitas\CAD\Drawings Out\13-0710 C700 Milpitas Station – RFC Submit\C700-S-DB-A564.dwg

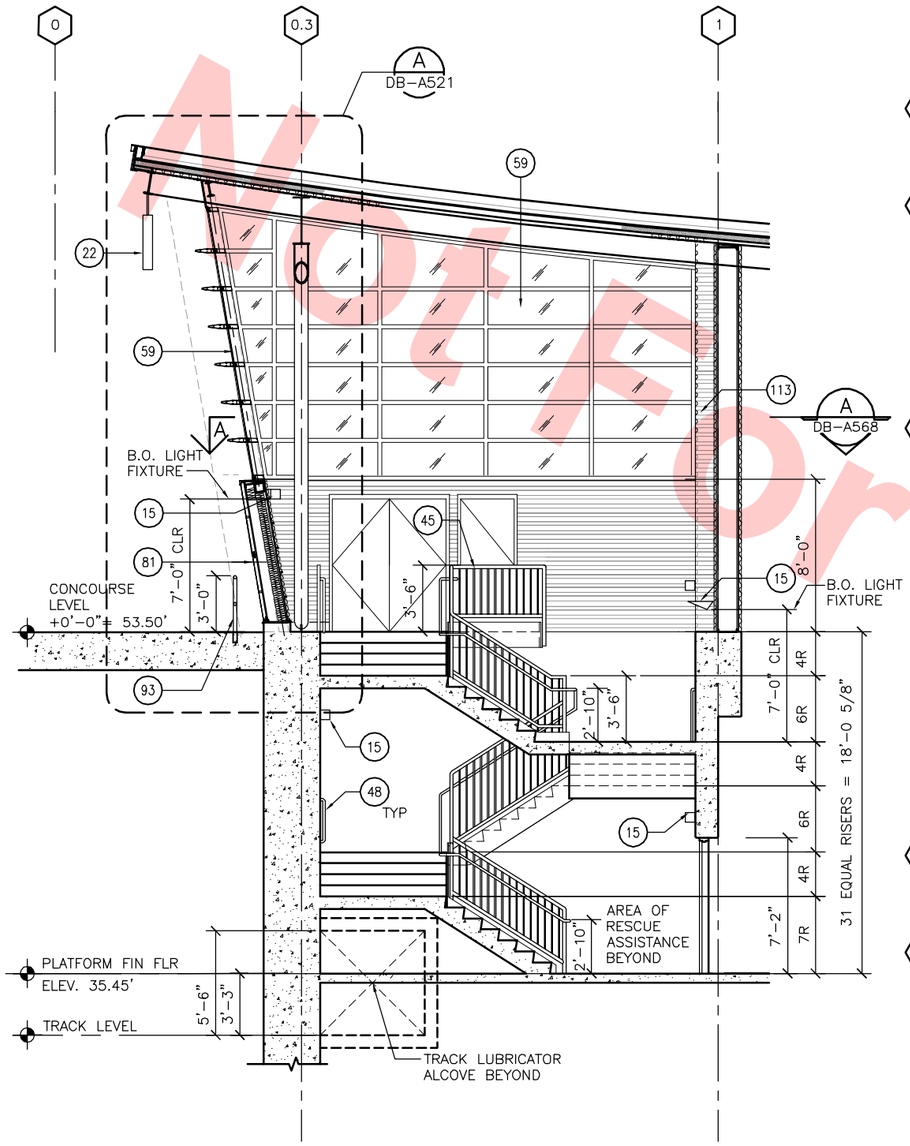

STAIR #6 – SECTION

SCALE: 1/4"=1'–0" STAIR #5 OH

A / DB–A565

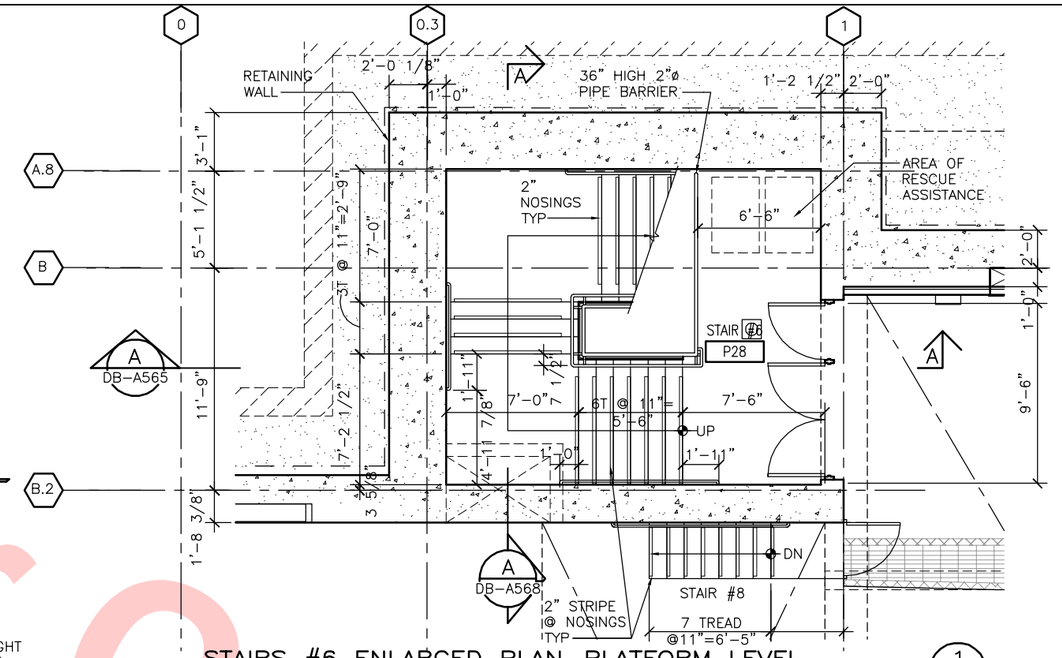

STAIRS #6 ENLARGED PLAN–PLATFORM LEVEL

SCALE: 1/4"=1'–0" STAIRS #5 OH SIMILAR

1 / DB–A565 DB–A111X

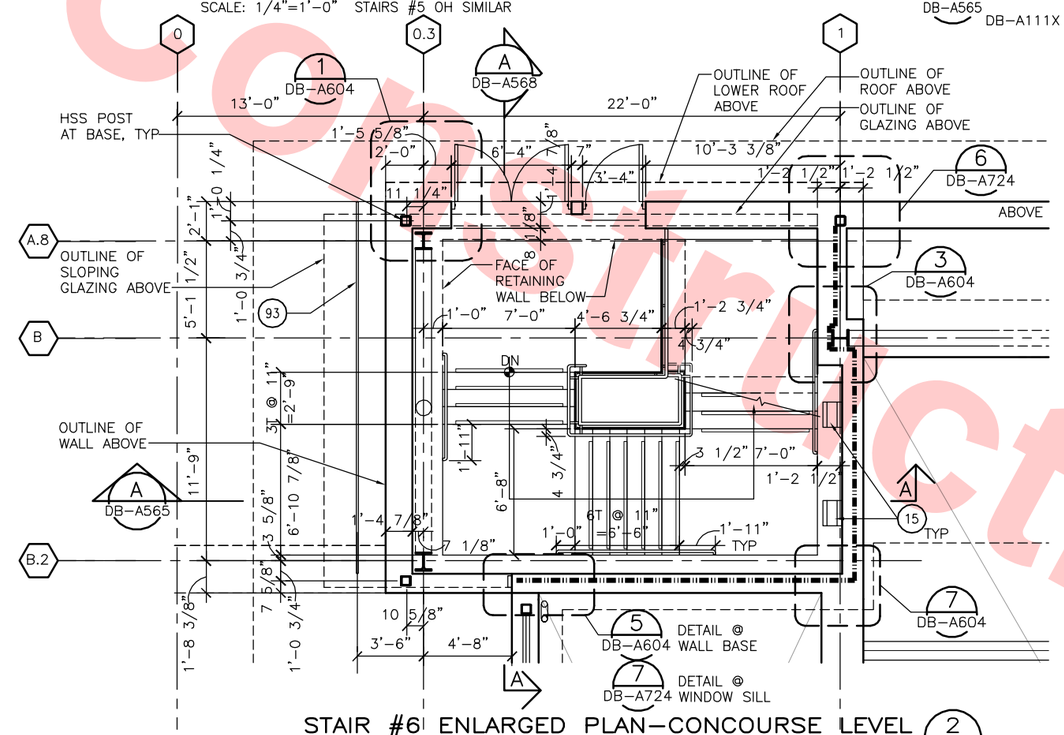

STAIR #6 ENLARGED PLAN–CONCOURSE LEVEL

SCALE: 1/4"=1'–0" STAIRS #5 OH SIMILAR

2 / DB–A565 DB–A121X

KEY NOTES

15	LIGHT FIXTURE
22	SIGN
45	GUARDRAIL ASSEMBLY– METAL BFS SHT AD20/AS21
48	HANDRAIL METAL– BFS SHT AD21 AND AS20
59	GLASS WALL SYSTEM TYPE 3
81	COMPOSITE WALL PANEL WP–1, SEE DWG. NO. DB–A701
85	RETAINING WALL
93	RAILING– STAINLESS STEEL
113	COMPOSITE WALL PANEL WP–2, SEE DWG. NO. DB–A701

Santa Clara Valley Transportation Authority

____NO EXCEPTIONS TAKEN (NET)
____MAKE CORRECTIONS NOTED (MCN)
____AMEND AND RESUBMIT (A/R)

Any action shown above is subject to the terms of the contract and does not relieve the Contractor of any of its obligations under the contract, including design and detailing.

Contract No.: DB11002F

By: _____ **Date:** _____

4' 0' 4' 8'
GRAPHIC SCALE

Not For Construction

REV	DATE	BY	SUB	APP	DESCRIPTION
0	20130710				READINESS FOR CONSTRUCTION

DESIGNED BY S. DEBNATH
DRAWN BY R. COLLADO
CHECKED BY E. BALLADA
IN CHARGE R. BARLAAN
DATE 20130710

LICENSED ARCHITECT SOMESH DEBNATH No. C21523 STATE OF CALIFORNIA

Skanska Shimmick Herzog
1436 California Circle
Milpitas, California 95035
A Joint Venture

Anil Verma Associates, Inc.
1970 Broadway, Suite 335
Oakland, CA 94612
Phone: (510) 835-2537 Fax: (510) 835-2339
SUBMITTED

Lockwood, Andrews & Newnam, Inc. A LEO A DALY COMPANY
T·Y·LIN INTERNATIONAL
APPROVED

VTA BART SILICON VALLEY
BART SILICON VALLEY BERRYESSA EXTENSION

LINE, TRACK, STATIONS AND SYSTEMS
DESIGN UNIT 023
MILPITAS STATION
STAIR #6 ENLARGED PLAN AND SECTION
(STAIR #5 OH SIMILAR)

CADD FILENAME C700–S–DB–A565.dwg
SIZE D | SCALE 1/4"=1'–0"
CONTRACT NO. C700 | REV. 0
AREA CODE DB | SHEET NO. A565 | PAGE NO. 0461

JosephG Jun 26, 2013 – 2:39pm G:\Current Projects\VTA–Berryessa Extension Project\Station – Milpitas\CAD\Drawings Out\13–0710 C700 Milpitas Station – RFC Submit\C700–S–DB–A565.dwg

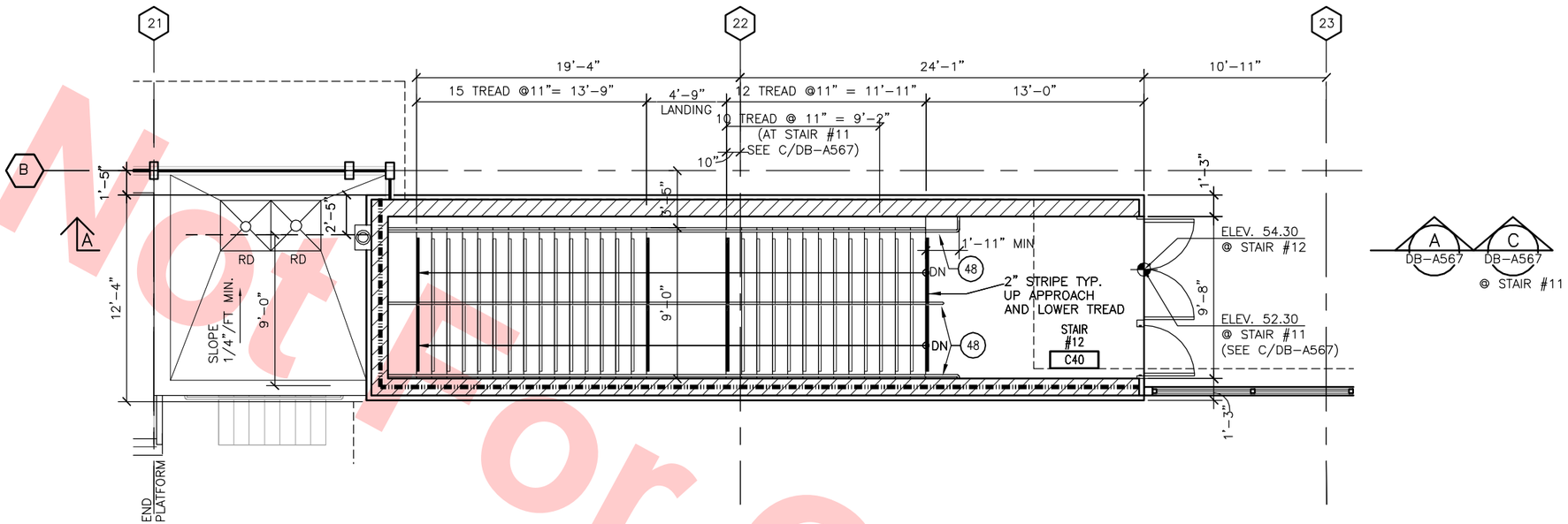

STAIR #12 ENLARGED PLAN—CONCOURSE LEVEL (1) DB-A566

SCALE: 1/4"=1'-0" (STAIR #11 OH) DB-A128X

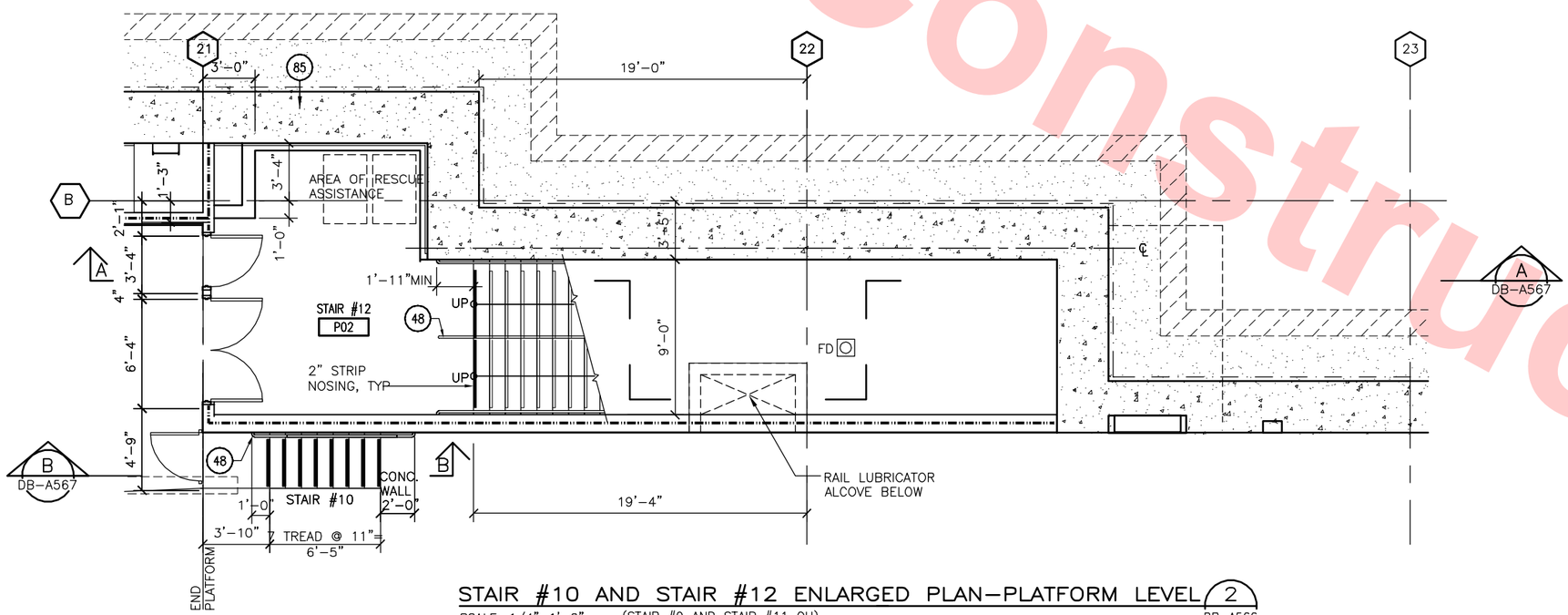

STAIR #10 AND STAIR #12 ENLARGED PLAN—PLATFORM LEVEL (2) DB-A566

SCALE: 1/4"=1'-0" (STAIR #9 AND STAIR #11 OH) DB-A116X

KEY NOTES

(48) HANDRAIL – METAL

(85) RETAINING WALL

Santa Clara Valley Transportation Authority

____NO EXCEPTIONS TAKEN (NET)
____MAKE CORRECTIONS NOTED (MCN)
____AMEND AND RESUBMIT (A/R)

Any action shown above is subject to the terms of the contract and does not relieve the Contractor of any of its obligations under the contract, including design and detailing.

Contract No.: DB11002F

By: _____ Date: _____

4' 0' 4' 8'

GRAPHIC SCALE

Not for Construction

REV	DATE	BY	SUB	APP	DESCRIPTION
0	20130710				READINESS FOR CONSTRUCTION

DESIGNED BY S. DEBNATH
DRAWN BY R. COLLADO
CHECKED BY E. BALLADA
IN CHARGE R. BARLAAN
DATE 20130710

LICENSED ARCHITECT SOMESH DEBNATH No. C21523 STATE OF CALIFORNIA

Skanska Shimmick Herzog
1436 California Circle
Milpitas, California 95035
A Joint Venture

Anil Verma Associates, Inc.
1970 Broadway, Suite 525, Oakland, CA 94612
Phone: (510) 835-2537 Fax: (510) 835-2339
SUBMITTED

Lockwood, Andrews & Newnam, Inc. A LEO A DALY COMPANY
T·Y·LIN INTERNATIONAL
APPROVED

VTA BART SILICON VALLEY
BART SILICON VALLEY BERRYESSA EXTENSION

LINE, TRACK, STATIONS AND SYSTEMS DESIGN UNIT 023
MILPITAS STATION

STAIR #10 AND STAIR #12 ENLARGED PLANS
(STAIR #11 AND STAIR #9 OH)

CADD FILENAME C700-S-DB-A566.dwg
SIZE D | SCALE 1/4"=1'-0"
CONTRACT NO. C700 | REV. 0
AREA CODE DB | SHEET NO. A566 | PAGE NO. 0462

Jun 26, 2013 – 2:40pm G:\Current Projects\VTA-Berryessa Extension Project\Station – Milpitas\CADD\Drawings Out\13-0710 C700 Milpitas Station – RFC Submit\C700-S-DB-A566.dwg
JosephG

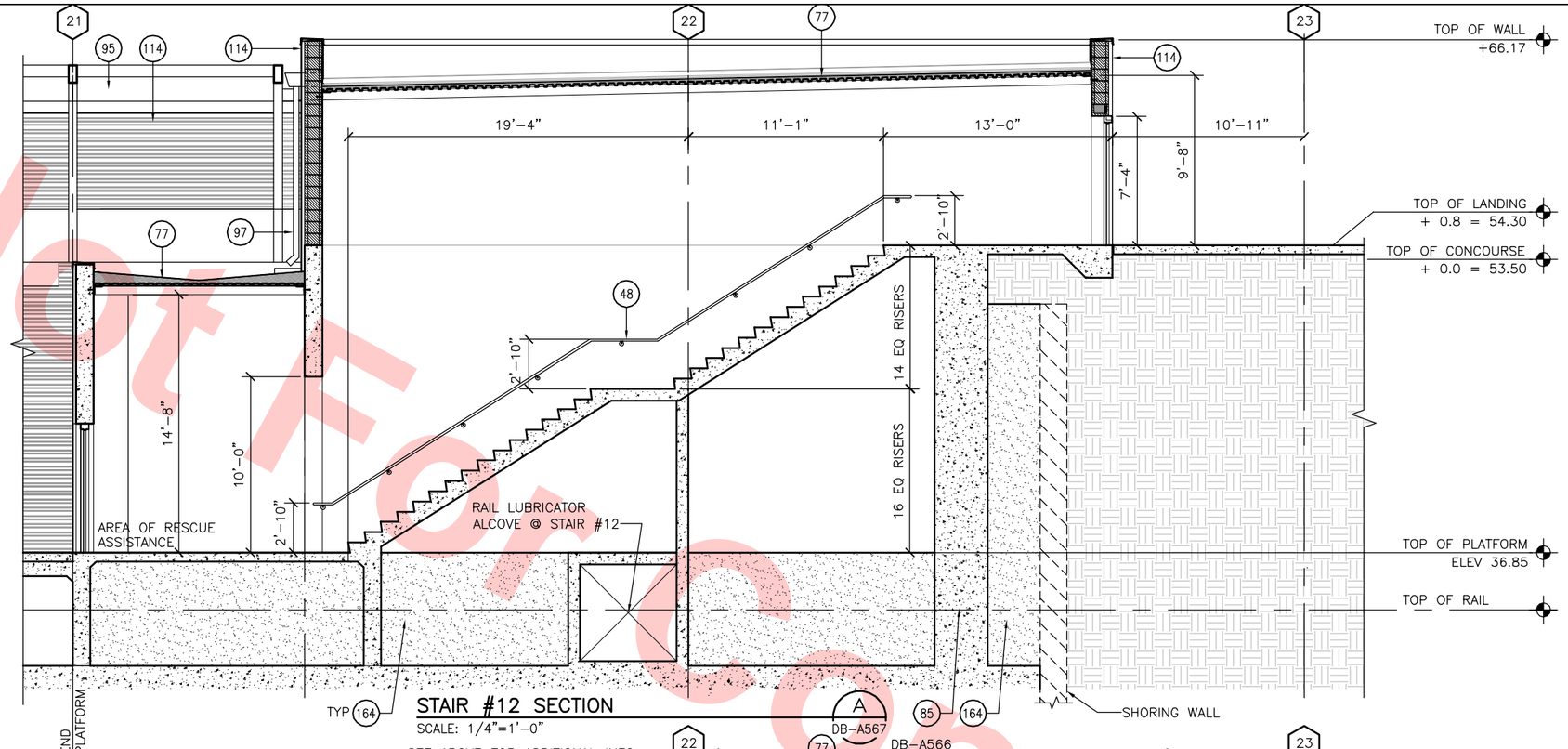

STAIR #12 SECTION

SCALE: 1/4"=1'-0"

SEE ABOVE FOR ADDITIONAL INFO.

A DB-A567

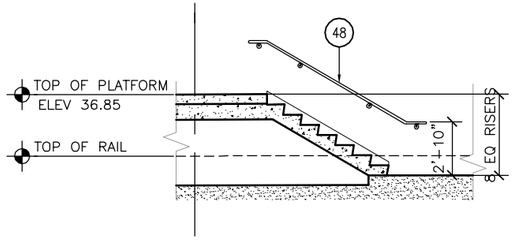

STAIR #10 SECTION

SCALE: 1/4"=1'-0" STAIR #9 OH (SIMILAR)

B DB-A567

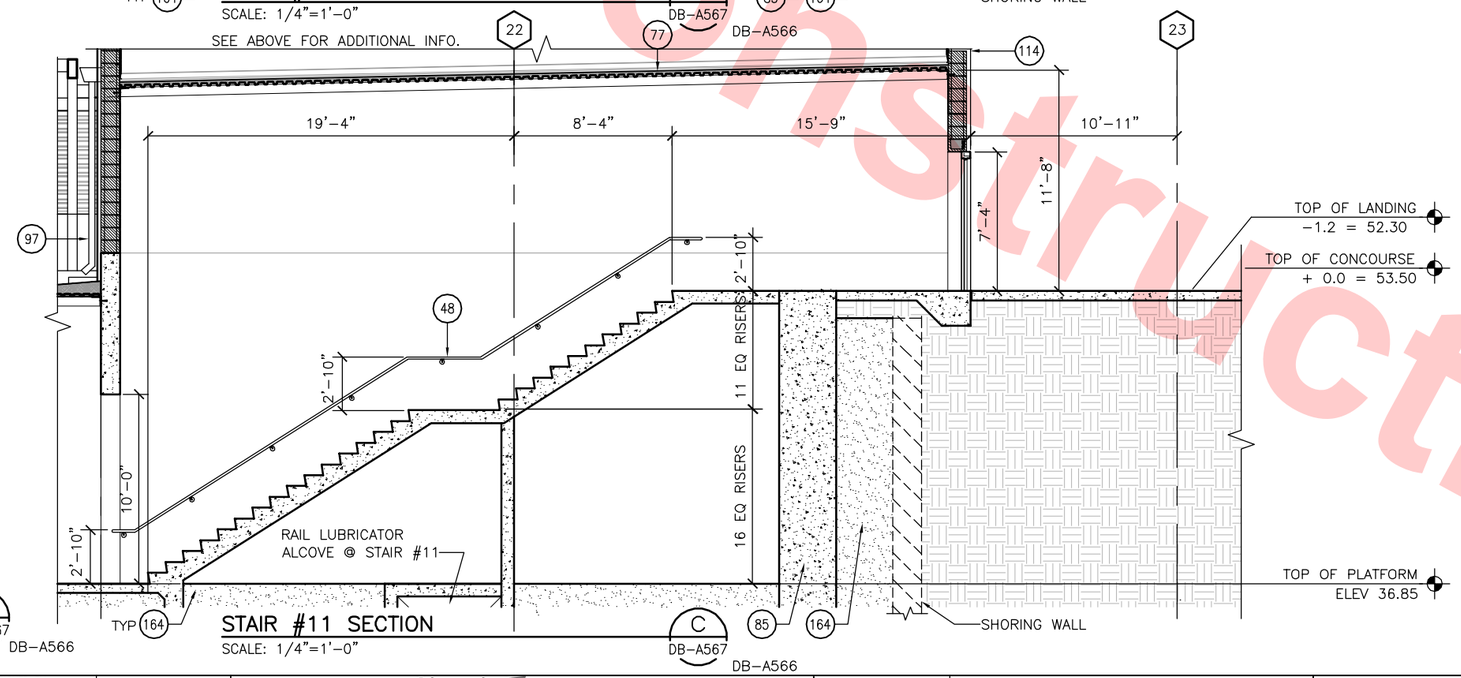

STAIR #11 SECTION

SCALE: 1/4"=1'-0"

C DB-A567 DB-A566

DB-A566

KEY NOTES

- (43) END-OF-PLATFORM GATE, SEE BFS DET 1/AS70, SIM
- (48) HANDRAIL – METAL
- (77) MEMBRANE ROOFING
- (85) RETAINING WALL
- (95) BIRD/SAFETY NETTING
- (97) DOWNSPOUT/RAINWATER LEADER
- (114) METAL WALL PANEL WP-2, SEE DWG NO. DB-A701
- (164) CONCRETE SLURRY SEE STRUCTURAL DRAWINGS

Santa Clara Valley Transportation Authority

____NO EXCEPTIONS TAKEN (NET)
____MAKE CORRECTIONS NOTED (MCN)
____AMEND AND RESUBMIT (A/R)

Any action shown above is subject to the terms of the contract and does not relieve the Contractor of any of its obligations under the contract, including design and detailing.

Contract No.: DB11002F

By: _____ Date: _____

Not For Construction

REV	DATE	BY	SUB	APP	DESCRIPTION
0	20130710				READINESS FOR CONSTRUCTION

DESIGNED BY S. DEBNATH
DRAWN BY R. COLLADO
CHECKED BY E. BALLADA
IN CHARGE R. BARLAAN
DATE 20130710

LICENSED ARCHITECT SOMESH DEBNATH No. C21523 STATE OF CALIFORNIA

Skanska Shimmick Herzog
1436 California Circle
Milpitas, California 95035
A Joint Venture

Anil Verma Associates, Inc.
1970 Broadway, Suite 525 Oakland, CA 94612
Phone: (510) 835-2537 Fax: (510) 535-2339
SUBMITTED

Lockwood, Andrews & Newnam, Inc. A LAN & BALY COMPANY
T·Y·LIN INTERNATIONAL
APPROVED

VTA BART SILICON VALLEY
BART SILICON VALLEY BERRYESSA EXTENSION

LINE, TRACK, STATIONS AND SYSTEMS
DESIGN UNIT 023
MILPITAS STATION

STAIR #12, STAIR #11 AND STAIR #10
(STAIR #9 O.H. SIMILAR) SECTIONS

CADD FILENAME C700-S-DB-A567.dwg
SIZE D | SCALE 1/4"=1'-0"
CONTRACT NO. C700 | REV. 0
AREA CODE DB | SHEET NO. A567 | PAGE NO. 0463

JoseinG Jun 26, 2013 – 2:41pm G:\Current Projects\VTA-Berryessa Extension Project\Station – Milpitas\CAD\Drawings Out\13-0710 C700 Milpitas Station – RFC Submit\C700-S-DB-A567.dwg

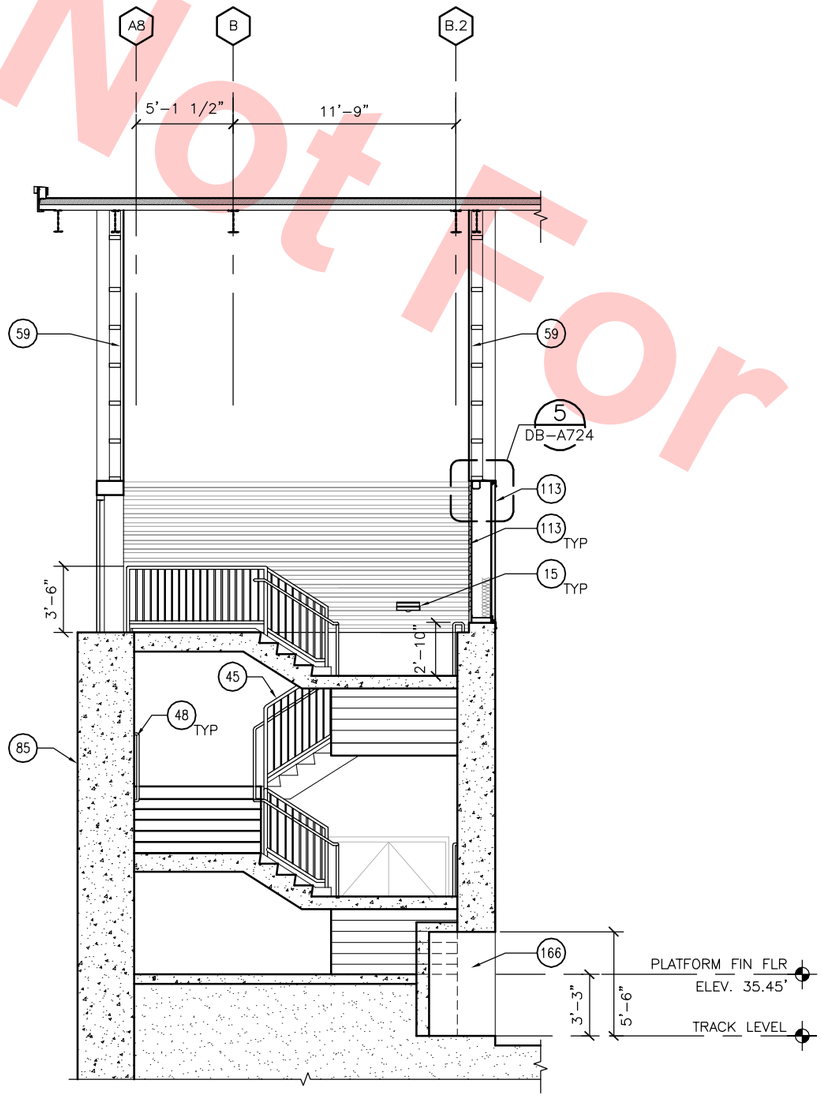

STAIR #6 – SECTION (A) DB-A565

SCALE: 1/4"=1'-0" STAIR #5 OH

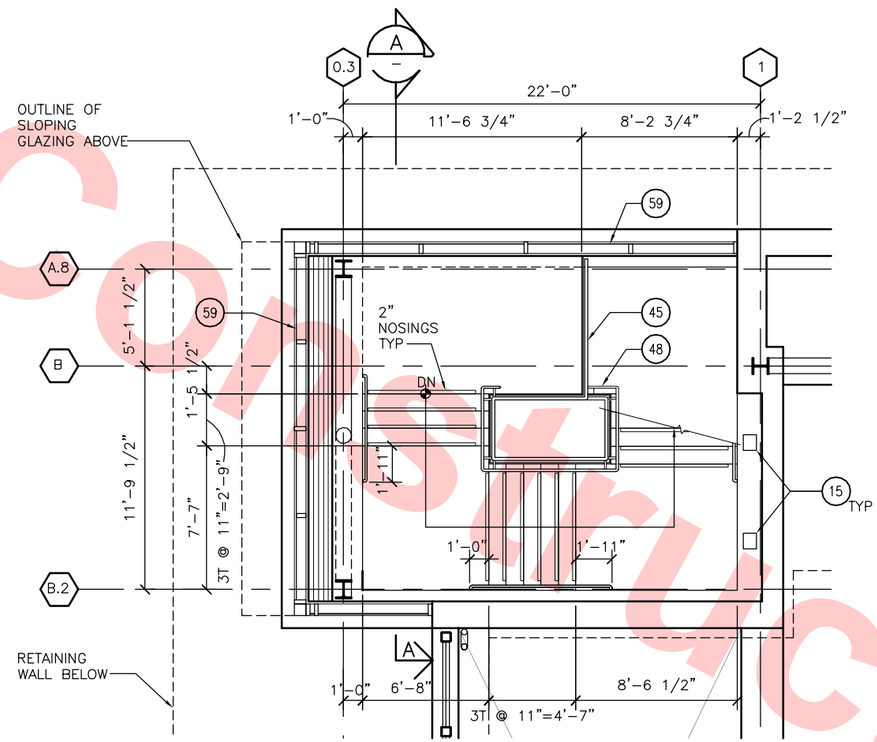

STAIR #6 AND #8 ENLARGED PLAN–CONCOURSE LEVEL (1) DB-A568

SCALE: 1/4"=1'-0" STAIR #5 AND #7 OH

DB-A565

KEY NOTES

- (15) LIGHT FIXTURE
- (45) GUARDRAIL ASSEMBLY– METAL BFS SHT AD20/AS21
- (48) HANDRAIL METAL– BFS SHT AD21 AND AS20
- (59) GLASS WALL SYSTEM TYPE 3
- (81) COMPOSITE WALL PANEL WP–1, SEE DWG. NO. DB–A701
- (85) RETAINING WALL
- (113) COMPOSITE WALL PANEL WP–2, SEE DWG. NO. DB–A701
- (166) RAIL LUBRICATOR ALCOVE

Santa Clara Valley Transportation Authority

____NO EXCEPTIONS TAKEN (NET)
____MAKE CORRECTIONS NOTED (MCN)
____AMEND AND RESUBMIT (A/R)

Any action shown above is subject to the terms of the contract and does not relieve the Contractor of any of its obligations under the contract, including design and detailing.

Contract No.: DB11002F

By: _____ Date: _____

4' 0' 4' 8'
GRAPHIC SCALE

Not For Construction

REV	DATE	BY	SUB	APP	DESCRIPTION
0	20130710				READINESS FOR CONSTRUCTION

DESIGNED BY S. DEBNATH
DRAWN BY R. COLLADO
CHECKED BY E. BALLADA
IN CHARGE R. BARLAAN
DATE 20130430

LICENSED ARCHITECT SOMESH DEBNATH No. C21523 STATE OF CALIFORNIA

Skanska Shimmick Herzog
1436 California Circle
Milpitas, California 95035
A Joint Venture

Anil Verma Associates, Inc.
1970 Broadway, Suite 525, Oakland, CA 94612
Phone: (510) 835-2537 Fax: (510) 835-2339
SUBMITTED

Lockwood, Andrews & Newnam, Inc. A LEO A DALY COMPANY
T·Y·LIN INTERNATIONAL
APPROVED

VTA BART SILICON VALLEY
BART SILICON VALLEY BERRYESSA EXTENSION

LINE, TRACK, STATIONS AND SYSTEMS
DESIGN UNIT 023
MILPITAS STATION
STAIR #6 ENLARGED PLANS AND SECTION
STAIR #5 OH SIMILAR

CADD FILENAME C700–S–DB–A568.dwg
SIZE D | SCALE 1/4"=1'-0"
CONTRACT NO. C700 | REV. 0
AREA CODE DB | SHEET NO. A568 | PAGE NO. 0464

Jun 26, 2013 – 2:42pm G:\Current Projects\VTA–Berryessa Extension Project\Station – Milpitas\CAD\Drawings Out\13–0710 C700 Milpitas Station – RFC Submit\C700–S–DB–A568.dwg
JosephG

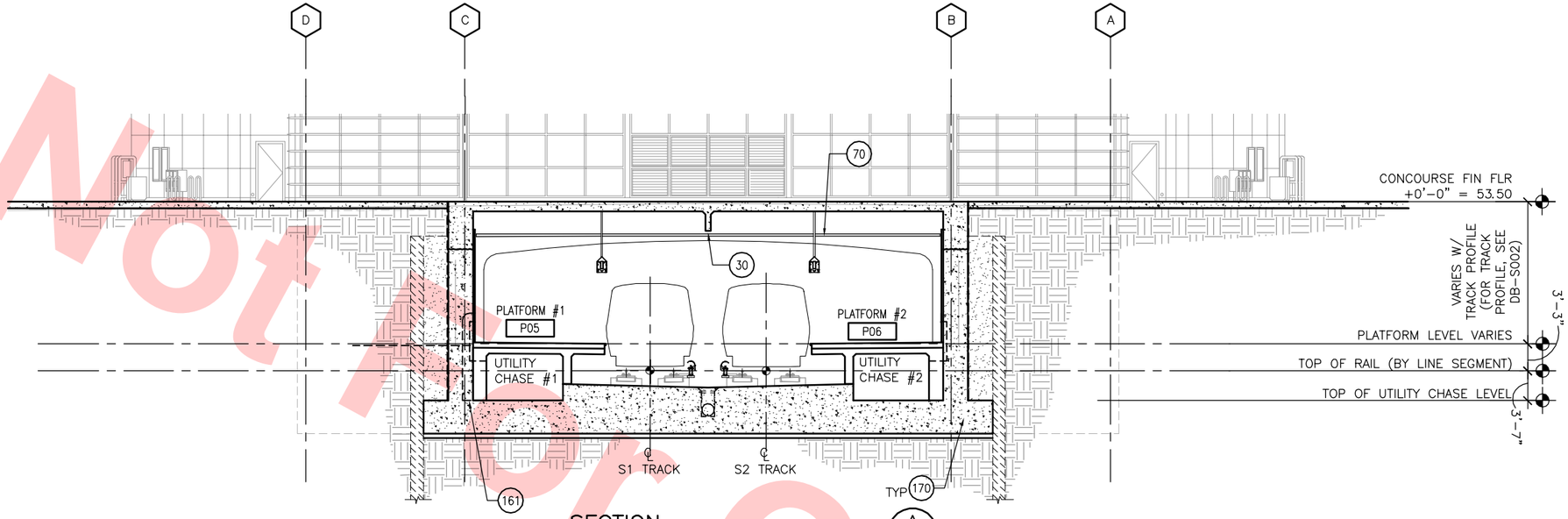

SECTION A DB-A569
SCALE: 1/8"=1'-0"

DB-A094
DB-A114X
DB-A126X

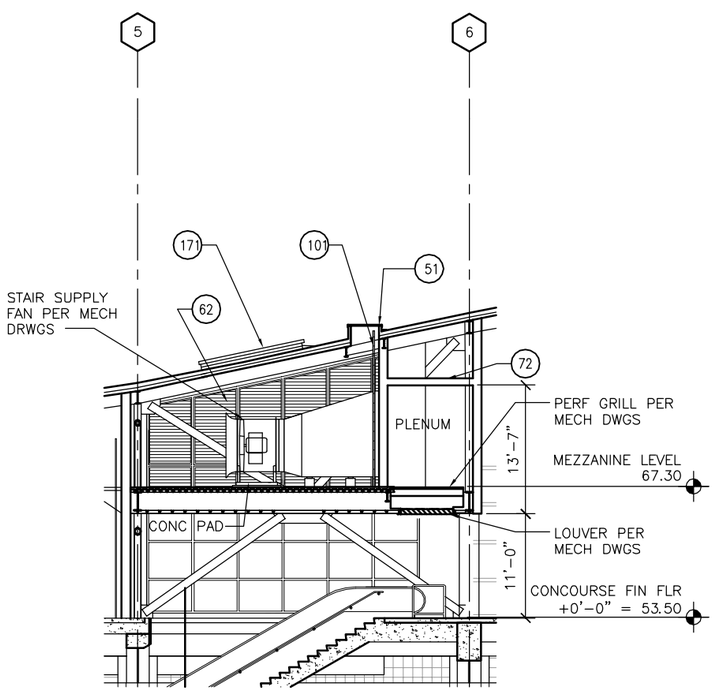

SECTION B DB-A569
SCALE: 1/8"=1'-0"

DB-A133

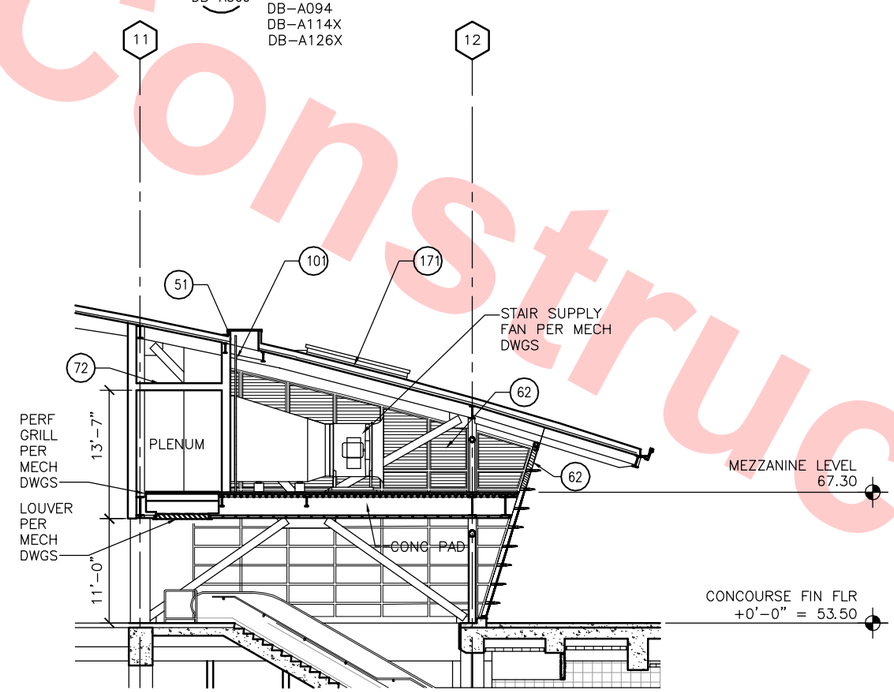

SECTION C DB-A569
SCALE: 1/8"=1'-0"

DB-A133

KEY NOTES

- 30 STRUCTURAL BEAM
- 51 ACCESS HATCH
- 48 HANDRAIL – METAL
- 62 LOUVER
- 70 SUSPENDED LINEAR METAL CEILING
- 72 2 HR GYP BOARD CEILING TYPE C1
- 85 RETAINING WALL
- 90 CMU WALL
- 101 FIXED LADDER WITH SAFETY POLE
- 145 SMOKE CONTROL FAN AND DUCT
- 161 LOW WALL VENTS
- 170 SHEET WATERPROOFING
- 171 EQUIPMENT ACCESS ROOF SCUTTLE
- 173 EMERGENCY FAN DAMPER MONITORING WINDOW

Santa Clara Valley Transportation Authority

____NO EXCEPTIONS TAKEN (NET)
____MAKE CORRECTIONS NOTED (MCN)
____AMEND AND RESUBMIT (A/R)

Any action shown above is subject to the terms of the contract and does not relieve the Contractor of any of its obligations under the contract, including design and detailing.

Contract No.: DB11002F

By: _____ Date: _____

Not For Construction

REV	DATE	BY	SUB	APP	DESCRIPTION
0	20130710				READINESS FOR CONSTRUCTION

DESIGNED BY S. DEBNATH
DRAWN BY R. COLLADO
CHECKED BY E. BALLADA
IN CHARGE R. BARLAAN
DATE 20130710

LICENSED ARCHITECT SOMESH DEBNATH No. C21523 STATE OF CALIFORNIA

Skanska Shimmick Herzog
1436 California Circle
Milpitas, California 95035
A Joint Venture

Anil Verma Associates, Inc.
1970 Broadway, Suite 525, Oakland, CA 94612
Phone: (510) 835-2339 Fax: (510) 835-2339

Lockwood, Andrews & Newnam, Inc. A LAN & BAH COMPANY
T·Y·LIN INTERNATIONAL

SUBMITTED _____
APPROVED _____

VTA BART SILICON VALLEY
BART SILICON VALLEY BERRYESSA EXTENSION

LINE, TRACK, STATIONS AND SYSTEMS
DESIGN UNIT 023
MILPITAS STATION

BUILDING SECTIONS

CADD FILENAME C700-S-DB-A569.dwg
SIZE D | SCALE 1/8"=1'-0"
CONTRACT NO. C700 | REV. 0
AREA CODE DB | SHEET NO. A569 | PAGE NO. 0465

Jun 26, 2013 – 2:42pm G:\Current Projects\VTA-Berryessa Extension Project\Station – Milpitas\CAD\Drawings Out\13-0710 C700 Milpitas Station – RFC Submit\C700-S-DB-A569.dwg
JosephG

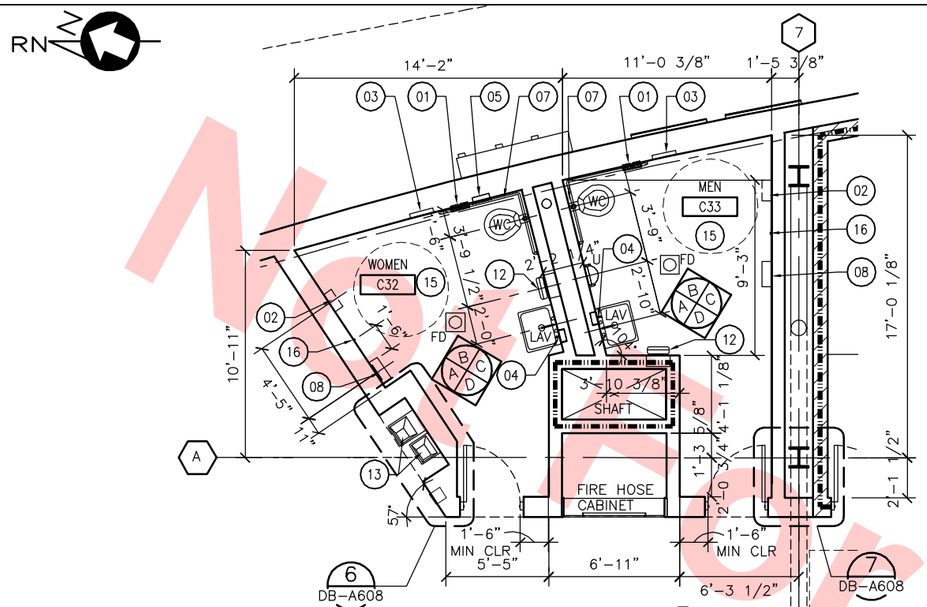

ENLARGED FLOOR PLAN 1

MEN'S AND WOMEN'S RESTROOMS
SCALE: 1/4"=1'-0"
DB-A571
DB-A122X

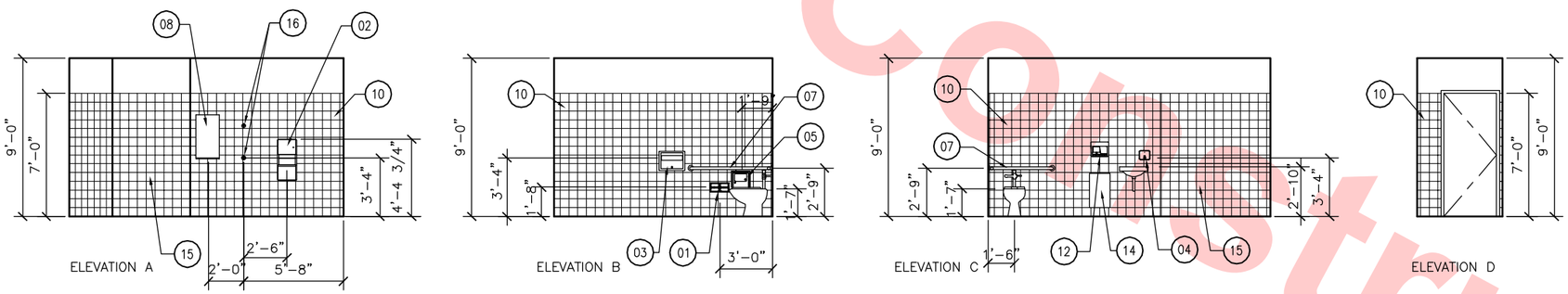

INTERIOR ELEVATIONS 2

WOMEN'S RESTROOM
SCALE: 1/4"=1'-0"
DB-A571

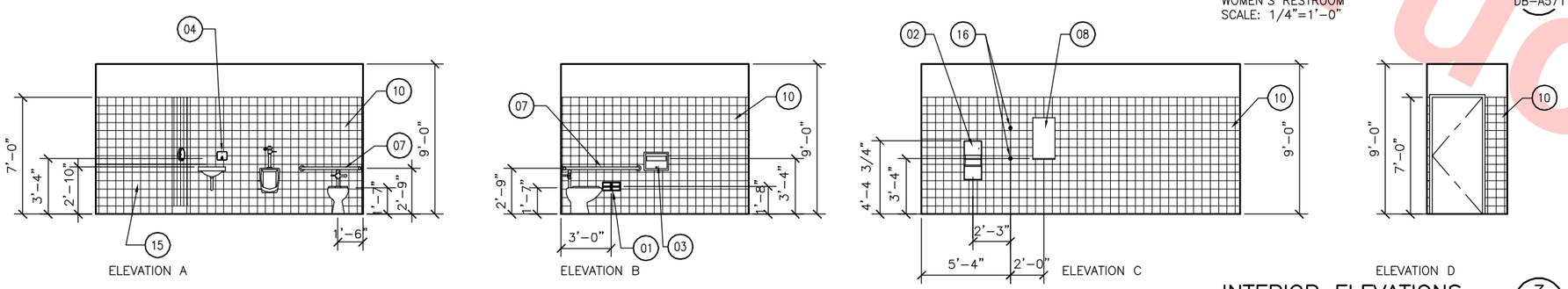

INTERIOR ELEVATIONS 3

MEN'S RESTROOM
SCALE: 1/4"=1'-0"
DB-A571

FIXTURES AND ACCESSORIES

PLUMBING FIXTURES

LAV	LAVATORY
WC	WATER CLOSET
U	URINAL
FD	FLOOR DRAIN

ACCESSORIES KEYNOTES

01 DOUBLE-ROLL TOILET TISSUE DISPENSER, BOBRICK B-27460
02 PAPER TOWEL DISPENSER/WASTE RECEPTACLE. BOBRICK B-43699
03 RECESSED TOILET-SEAT-COVER DISPENSER. BOBRICK B-301
04 RECESSED SOAP DISPENSER BOBRICK B-306
05 RECESSED SANITARY NAPKIN DISPOSAL BOBRICK B-353
06 NOT USED
07 GRAB BAR BOBRICK B-5897
08 MIRROR WITH STAINLESS STEEL CHANNEL FRAME, BOBRICK B-165
09 COAT RACK WITH SHELF SAFCO CONTEMPO MODEL S4221
10 6"x6" WALL TILE CROSSVILLE TRUFFLE A876
11 NOT USED
12 SURFACE MOUNTED ELECTRONIC HAND DRYER, SLOAN OPTIMA EHD-401, 120 VOLTS
13 DRINKING FOUNTAINS TYPE 1
14 ELECTRIC WALL HEATER BELOW
15 SEE FINISH SCHEDULE SHEET DB-A702 FOR FINISHES.
16 HEAVY DUTY CLOTHES HOOK, BOBRICK B-211

NOTES

FIXTURE, LOCATIONS AND ACCESSORIES MOUNTING DIMENSIONS PER ADA REQUIREMENTS

Santa Clara Valley Transportation Authority

____NO EXCEPTIONS TAKEN (NET)
____MAKE CORRECTIONS NOTED (MCN)
____AMEND AND RESUBMIT (A/R)

Any action shown above is subject to the terms of the contract and does not relieve the Contractor of any of its obligations under the contract, including design and detailing.

Contract No.: DB11002F

By: _____ Date: _____

4' 0' 4' 8'
GRAPHIC SCALE

Not For Construction

REV	DATE	BY	SUB	APP	DESCRIPTION
0	20130430				READINESS FOR CONSTRUCTION

DESIGNED BY S. DEBNATH
DRAWN BY R. COLLADO
CHECKED BY E. BALLADA
IN CHARGE R. BARLAAN
DATE 20130430

LICENSED ARCHITECT SOMESH DEBNATH No. C21523 STATE OF CALIFORNIA

Skanska Shimmick Herzog
1436 California Circle
Milpitas, California 95035
A Joint Venture

Anil Verma Associates, Inc.
1970 Broadway, Suite 525, Oakland, CA 94612
Phone: (510) 835-2537 Fax: (510) 835-2339

Lockwood, Andrews & Newnam, Inc. A CH2M HILL COMPANY
T-Y-LIN INTERNATIONAL

SUBMITTED
APPROVED

VTA BART SILICON VALLEY
BART SILICON VALLEY BERRYESSA EXTENSION

LINE, TRACK, STATIONS AND SYSTEMS
DESIGN UNIT 023
MILPITAS STATION

CONCOURSE LEVEL – ENLARGED RESTROOM PLAN AND INTERIOR ELEVATIONS

CADD FILENAME C700-S-DB-A571.dwg
SIZE D | SCALE 1/4"=1'-0"
CONTRACT NO. C700 | REV. 0
AREA CODE DB | SHEET NO. A571 | PAGE NO. 0466

JosephG Jun 26, 2013 – 2:43pm G:\Current Projects\VTA-Berryessa Extension Project\Station – Milpitas\CAD\Drawings Out\13-0710 C700 Milpitas Station – RFC Submit\C700-S-DB-A571.dwg

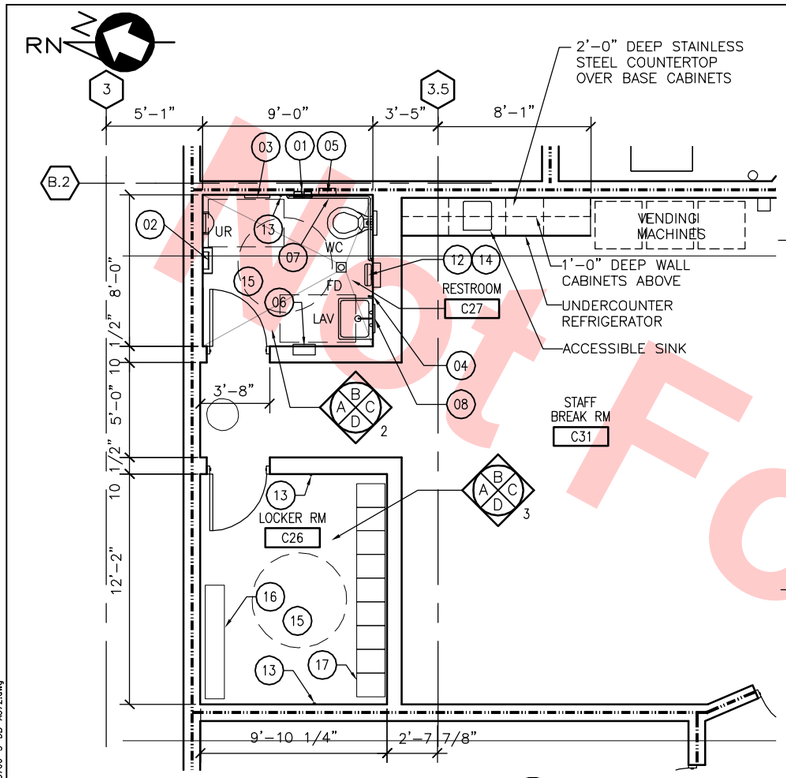

ENLARGED FLOOR PLAN (1 / DB-A572)

RESTROOM, LOCKER & STAFF BREAK ROOMS
SCALE: 1/4"=1'-0"

DB-A121X

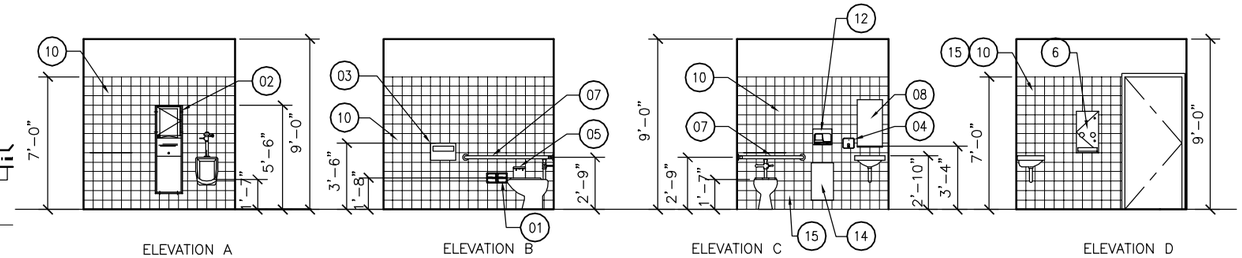

INTERIOR ELEVATIONS (2 / DB-A572)

RESTROOM
SCALE: 1/4"=1'-0"

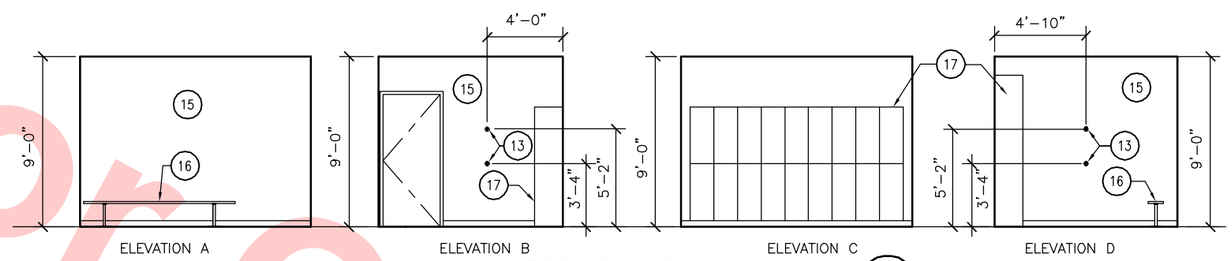

INTERIOR ELEVATIONS (3 / DB-A572)

LOCKER ROOM
SCALE: 1/4"=1'-0"

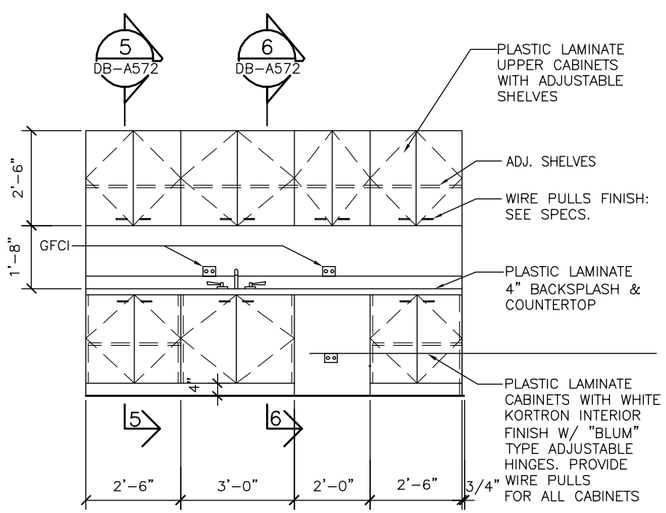

ELEVATION (4 / DB-A572)

STAFF BREAK ROOM
SCALE: 1/2"=1'-0"

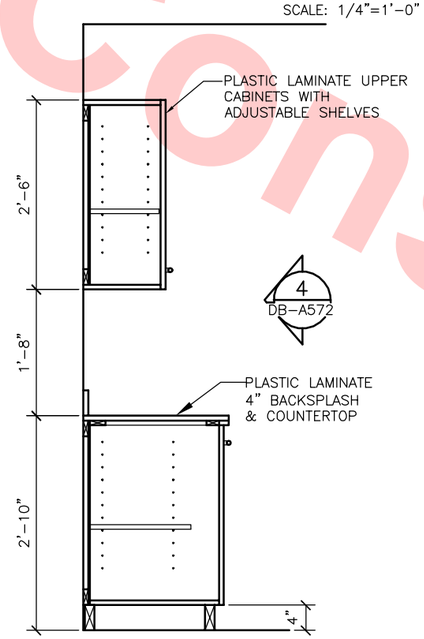

NOTE: PROVIDE BACKING IN WALL FOR UPPER AND LOWER CABINETS (TYP).

DETAIL (5 / DB-A572)

STAFF BREAK ROOM
SCALE: 1"=1'-0"

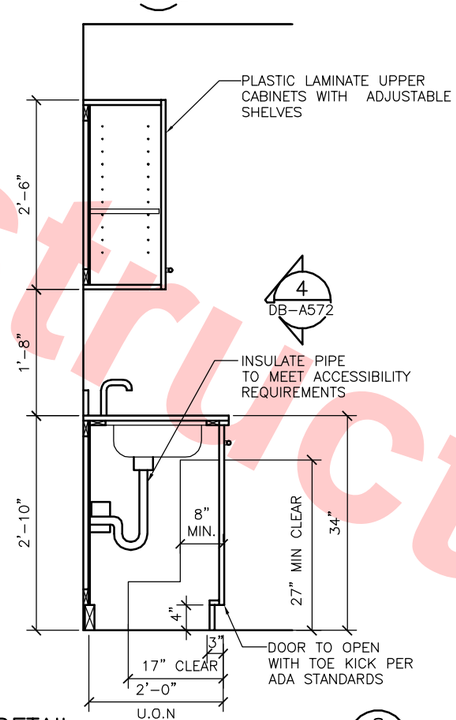

DETAIL (6 / DB-A572)

STAFF BREAK ROOM
SCALE: 1"=1'-0"

FIXTURES AND ACCESSORIES

01	DOUBLE-ROLL TOILET TISSUE DISPENSER, BOBRICK B-27460
02	RECESSED CONVERTIBLE PAPER TOWEL DISPENSER AND WASTE RECEPTACLE, BOBRICK B-3944
03	SURFACE-MOUNTED SEAT-COVER DISPENSER. BOBRICK B-221
04	SURFACE-MOUNTED SOAP DISPENSER, BOBRICK B-4112
05	SURFACE-MOUNTED SANITARY NAPKIN DISPOSAL, BOBRICK B-270
06	RECESSED NAPKIN/TAMPON VENDOR, BOBRICK B-37063
07	GRAB BAR BOBRICK B-5897
08	MIRROR W/ STAINLESS STEEL CHANNEL FRAME, BOBRICK B-165
09	COAT RACK WITH SHELF SAFCO CONTEMPO MODEL S4221
10	6" X 6" WALL TILE, CROSSVILLE TRUFFLE A876
11	NOT USED
12	SURFACE MOUNTED ELECTRONIC HAND DRYER, SLOAN OPTIMA EHD-401, 120 VOLTS
13	HEAVY-DUTY CLOTHES HOOK, BOBRICK B-211
14	ELECTRIC WALL HEATER BELOW
15	SEE FINISH SCHEDULE DWG NO. DB-A702 FOR FINISHES.
16	HEAVY DUTY PEDESTAL STYLE BENCH, 1-1/4" THICK X 9-1/2" WIDE, WITH DOUBLE COAT OF SATIN GLOSS SEALER, DEBOURGH
17	(18 TWO-TIER) 15" WIDE LOCKERS, OVERALL HEIGHT – 72", DEBOURGH

Santa Clara Valley Transportation Authority

____NO EXCEPTIONS TAKEN (NET)
____MAKE CORRECTIONS NOTED (MCN)
____AMEND AND RESUBMIT (A/R)

Any action shown above is subject to the terms of the contract and does not relieve the Contractor of any of its obligations under the contract, including design and detailing.

Contract No.: DB11002F

By: _____ Date: _____

4' 0' 4' 8'
GRAPHIC SCALE

Not For Construction

REV	DATE	BY	SUB	APP	DESCRIPTION
0	20130710				READINESS FOR CONSTRUCTION

DESIGNED BY S. DEBNATH
DRAWN BY R. COLLADO
CHECKED BY E. BALLADA
IN CHARGE R. BARLAAN
DATE 20130710

LICENSED ARCHITECT SOMESH DEBNATH No. C21523 STATE OF CALIFORNIA

Skanska Shimmick Herzog
1436 California Circle
Milpitas, California 95035
A Joint Venture

Anil Verma Associates, Inc.
1970 Broadway, Suite 535
Oakland, CA 94612
Phone: (510) 835-2537 Fax: (510) 535-2339
SUBMITTED

Lockwood, Andrews & Newnam, Inc. A LEO A DALY COMPANY
T·Y·LIN INTERNATIONAL
APPROVED

VTA BART SILICON VALLEY
BART SILICON VALLEY BERRYESSA EXTENSION

LINE, TRACK, STATIONS AND SYSTEMS DESIGN UNIT 023
MILPITAS STATION
CONCOURSE LEVEL – ENLARGED RESTROOM, LOCKER, BREAKROOM PLAN AND INTERIOR ELEVATIONS & DETAILS

CADD FILENAME C700-S-DB-A572.dwg
SIZE D | SCALE AS NOTED
CONTRACT NO. C700 | REV. 0
AREA CODE DB | SHEET NO. A572 | PAGE NO. 0467

JosephG Jun 26, 2013 – 2:44pm G:\Current Projects\VTA-Berryessa Extension Project\Station – Milpitas\CAD\Drawings Out\13-0710 C700 Milpitas Station – RFC Submitt\C700-S-DB-A572.dwg

DETAILED PLAN AT CONCOURSE LEVEL

SCALE: 1/4"=1'-0" DB-A125X

KEY NOTES

- 01 MAPCASE – WALL MOUNTED, SEE BFS DET 4/AS83
- 08 TRASH RECEPTACLE
- 09 NEWSPAPER RECYCLING RECEPTACLE (NIC)
- 10 NEWSPAPER RACK
- 19 PUBLIC PAY PHONE(S)
- 29 STRUCTURAL COLUMN
- 48 HANDRAIL – METAL
- 58 GLASS WALL SYSTEM TYPE 1
- 97 DOWNSPOUT/RAINWATER LEADER
- 181 8" WALL EXPANSION JOINT

Santa Clara Valley Transportation Authority

____NO EXCEPTIONS TAKEN (NET)
____MAKE CORRECTIONS NOTED (MCN)
____AMEND AND RESUBMIT (A/R)

Any action shown above is subject to the terms of the contract and does not relieve the Contractor of any of its obligations under the contract, including design and detailing.

Contract No.: DB11002F

By: _____ **Date:** _____

4' 0' 4' 16'
GRAPHIC SCALE

Not for Construction

REV	DATE	BY	SUB	APP	DESCRIPTION
0	20130710				READINESS FOR CONSTRUCTION

DESIGNED BY S. DEBNATH
DRAWN BY RC/PPB
CHECKED BY E. BALLADA
IN CHARGE R. BARLAAN
DATE 20130710

LICENSED ARCHITECT SOMESH DEBNATH No. C21523 STATE OF CALIFORNIA

Skanska Shimmick Herzog
1436 California Circle
Milpitas, California 95035
A Joint Venture

Anil Verma Associates, Inc.
1970 Broadway, Suite 555, Oakland, CA 94612
Phone: (510) 835-2537 Fax: (510) 835-2339
SUBMITTED

Lockwood, Andrews & Newnam, Inc. A LAN & BALY COMPANY
T·Y·LIN INTERNATIONAL
APPROVED

VTA BART SILICON VALLEY
BART SILICON VALLEY BERRYESSA EXTENSION

LINE, TRACK, STATIONS AND SYSTEMS DESIGN UNIT 023
MILPITAS STATION
POC STAIR (PST1), ESCALATOR(PES1/PES2) & ELEVATOR DETAILED PLAN AT CONCOURSE LEVEL

CADD FILENAME C700-S-DB-A573.dwg
SIZE D | SCALE 1/4"=1'-0"
CONTRACT NO. C700 | REV. 0
AREA CODE DB | SHEET NO. A573 | PAGE NO. 0468

JosephG Jun 26, 2013 – 2:45pm G:\Current Projects\VTA-Berryessa Extension Project\Station – Milpitas\CAD\Drawings Out\13-0710 C700 Milpitas Station – RFC Submit\C700-S-DB-A573.dwg

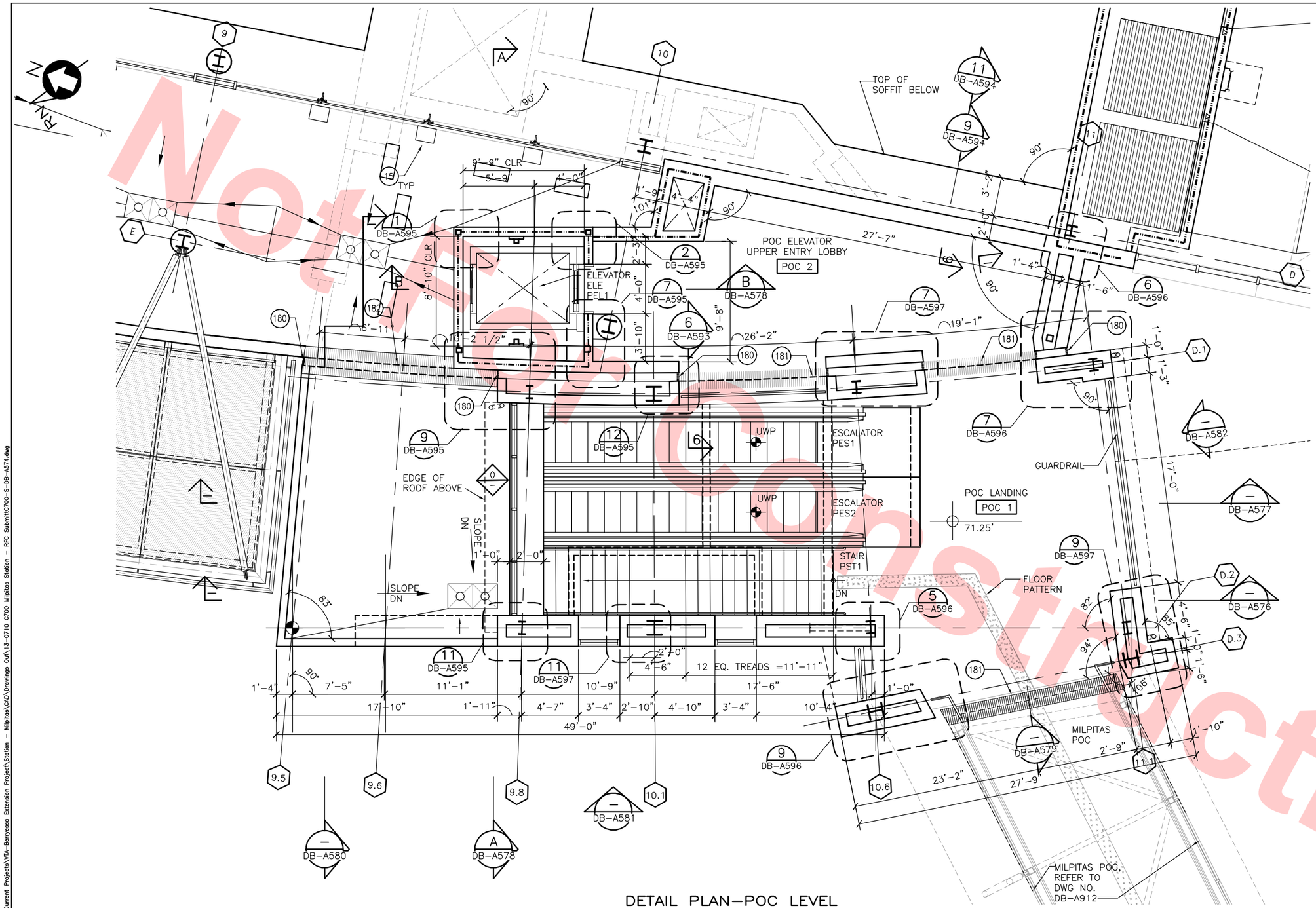

DETAIL PLAN–POC LEVEL

SCALE: 1/4"=1'-0"

DB-A132

KEY NOTES

- (15) LIGHT FIXTURE
- (180) 8" WALL EXPANSION JOINT
- (181) 8" FLOOR EXPANSION JOINT
- (182) 8" ROOF EXPANSION JOINT

Santa Clara Valley Transportation Authority

____NO EXCEPTIONS TAKEN (NET)
____MAKE CORRECTIONS NOTED (MCN)
____AMEND AND RESUBMIT (A/R)

Any action shown above is subject to the terms of the contract and does not relieve the Contractor of any of its obligations under the contract, including design and detailing.

Contract No.: DB11002F

By: _____ **Date:** _____

4' 0' 4' 16'

GRAPHIC SCALE

Not for Construction

REV	DATE	BY	SUB	APP	DESCRIPTION
0	20130710				READINESS FOR CONSTRUCTION

DESIGNED BY S. DEBNATH
DRAWN BY R.C./PPB
CHECKED BY E. BALLADA
IN CHARGE R. BARLAAN
DATE 20130710

LICENSED ARCHITECT SOMESH DEBNATH No. C21523 STATE OF CALIFORNIA

Skanska Shimmick Herzog
1436 California Circle
Milpitas, California 95035
A Joint Venture

Anil Verma Associates, Inc.
1970 Broadway, Suite 525, Oakland, CA 94612
Phone: (510) 835-2537 Fax: (510) 835-2339

Lockwood, Andrews & Newnam, Inc. A CH2M HILL COMPANY
T-Y-LIN INTERNATIONAL

SUBMITTED _____ APPROVED _____

VTA BART SILICON VALLEY
BART SILICON VALLEY BERRYESSA EXTENSION

LINE, TRACK, STATIONS AND SYSTEMS DESIGN UNIT 023
MILPITAS STATION
POC STAIR (PST1), ESCALATOR (PES1/PES2) & ELEVATOR DETAIL PLAN–POC LEVEL

CADD FILENAME C700–S–DB–A574.dwg
SIZE D | SCALE 1/4"=1'-0"
CONTRACT NO. C700 | REV. 0
AREA CODE DB | SHEET NO. A574 | PAGE NO. 0469

JosephG Jun 26, 2013 – 2:46pm G:\Current Projects\VTA–Berryessa Extension Project\Station – Milpitas\CAD\Drawings Out\13–0710 C700 Milpitas Station – RFC Submit\C700–S–DB–A574.dwg

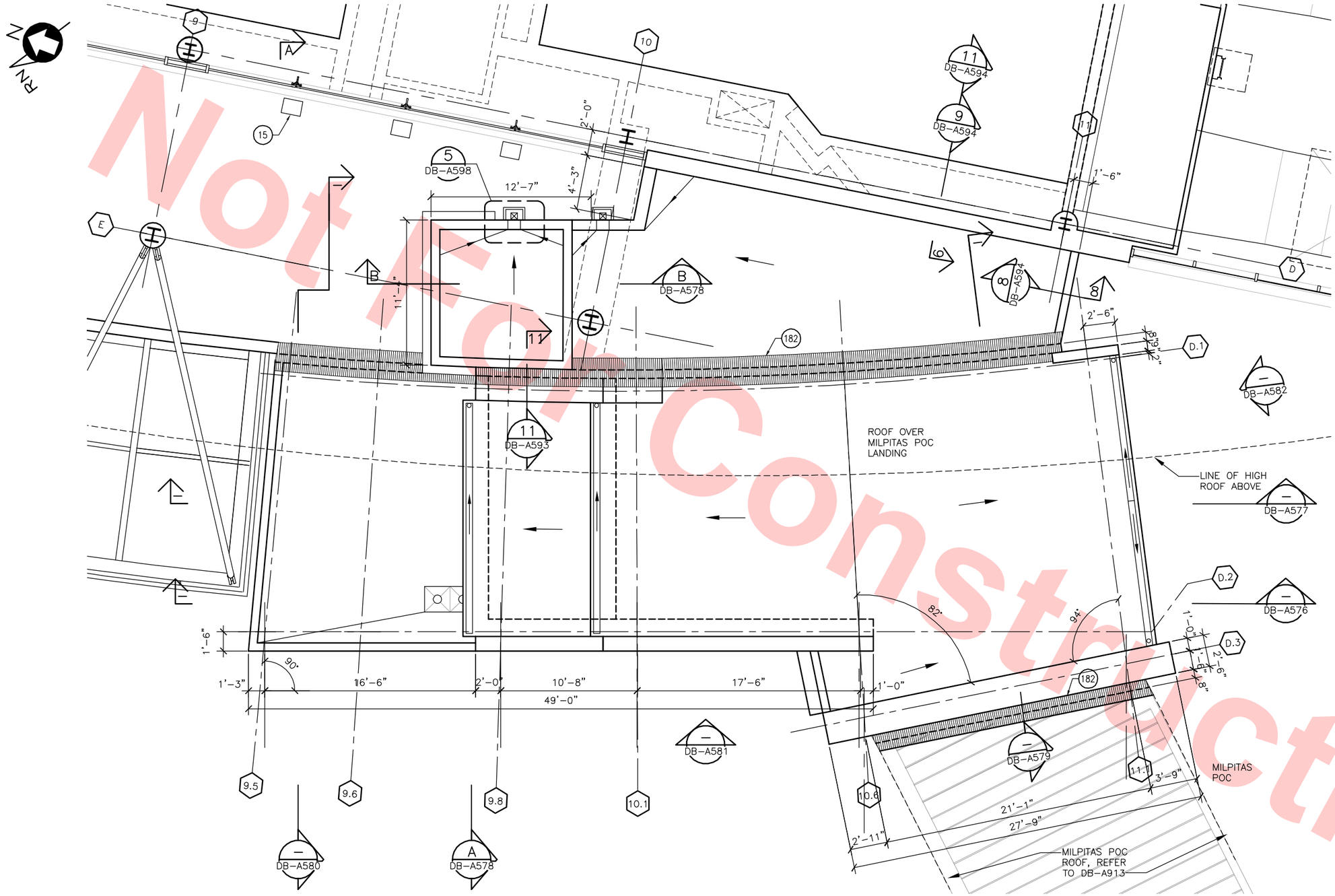

ROOF PLAN—POC LANDING

SCALE: 1/4"=1'-0"

DB-A145

KEY NOTES

15 LIGHT FIXTURE

182 8" ROOF EXPANSION JOINT

Santa Clara Valley Transportation Authority

____NO EXCEPTIONS TAKEN (NET)
____MAKE CORRECTIONS NOTED (MCN)
____AMEND AND RESUBMIT (A/R)

Any action shown above is subject to the terms of the contract and does not relieve the Contractor of any of its obligations under the contract, including design and detailing.

Contract No.: DB11002F

By: _____ Date: _____

4' 0' 4' 16'

GRAPHIC SCALE

Not For Construction

REV	DATE	BY	SUB	APP	DESCRIPTION
0	20130710				READINESS FOR CONSTRUCTION

DESIGNED BY S. DEBNATH
DRAWN BY RC/PPB
CHECKED BY E. BALLADA
IN CHARGE R. BARLAAN
DATE 20130710

LICENSED ARCHITECT SOMESH DEBNATH No. C21523 STATE OF CALIFORNIA

Skanska Shimmick Herzog
1436 California Circle
Milpitas, California 95035
A Joint Venture

Anil Verma Associates, Inc.
1970 Broadway, Suite 535
Oakland, CA 94612
Phone: (510) 835-2537 Fax: (510) 535-2339

SUBMITTED

Lockwood, Andrews & Newnam, Inc. A LEO A DALY COMPANY
T·Y·LIN INTERNATIONAL

APPROVED

VTA BART SILICON VALLEY

BART SILICON VALLEY BERRYESSA EXTENSION

LINE, TRACK, STATIONS AND SYSTEMS
DESIGN UNIT 023
MILPITAS STATION

ROOF PLAN— POC LANDING

CADD FILENAME C700-S-DB-A575.dwg
SIZE D | SCALE 1/4"=1'-0"
CONTRACT NO. C700 | REV. 0
AREA CODE DB | SHEET NO. A575 | PAGE NO. 0470

JosephG Jun 26, 2013 – 2:47pm G:\Current Projects\VTA-Berryessa Extension Project\Station – Milpitas\CAD\Drawings Out\13-0710 C700 Milpitas Station – RFC Submit\C700-S-DB-A575.dwg

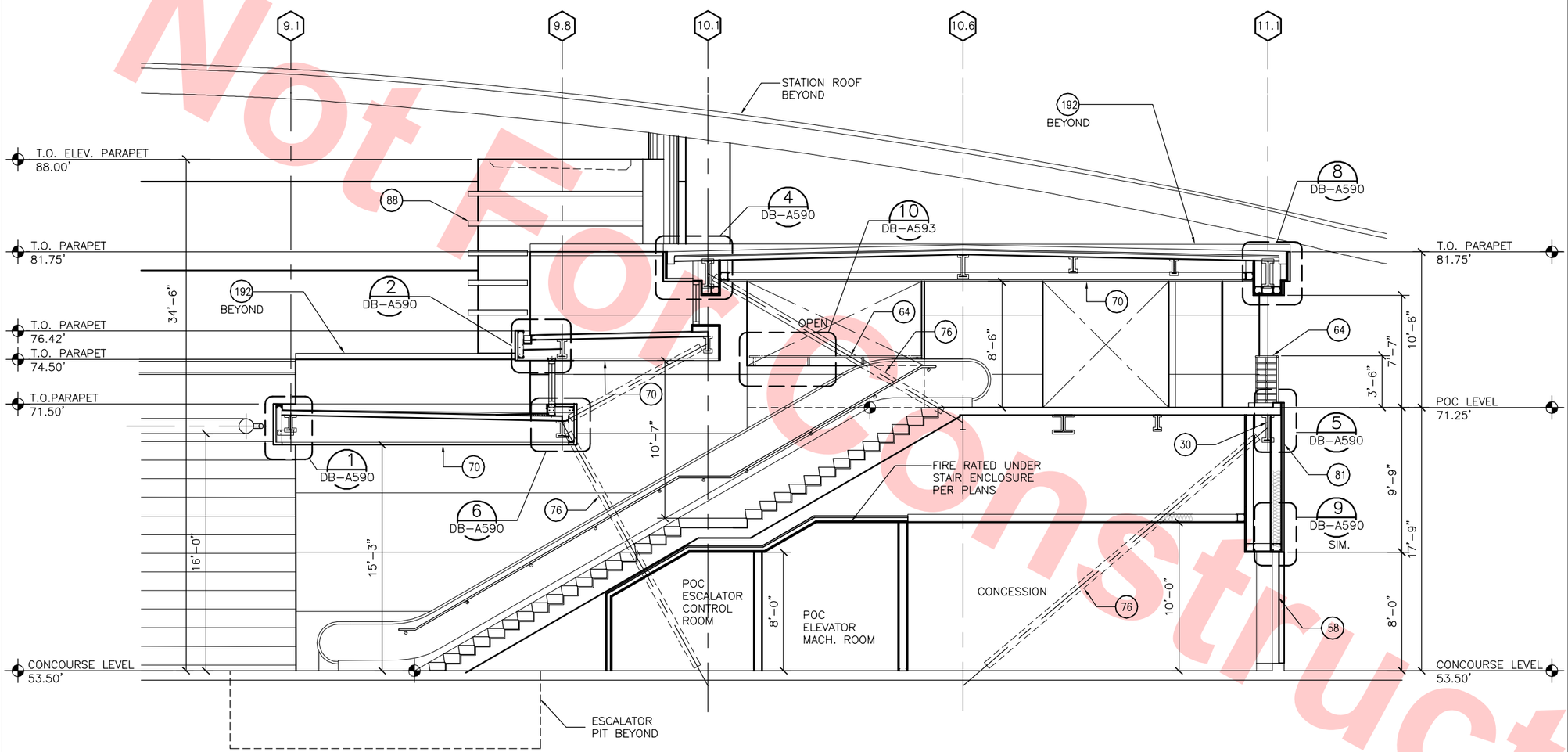

DETAILED STAIR SECTION

SCALE: 1/4"=1'-0"

DB-A573
DB-A574
DB-A575

KEY NOTES

- (30) STRUCTURAL BEAM
- (58) GLASS WALL SYSTEM TYPE 2
- (64) METAL GUARDRAIL
- (70) CEILING TYPE 1– SUSPENDED LINEAR METAL CEILING SYSTEM
- (76) STRUCTURAL BRACING
- (81) COMPOSITE WALL PANEL WP–1, SEE DWG NO. DB–A701
- (88) 4"X8" ALUMINUM TUBE
- (192) 8" ROOF EXPANSION JOINT

Santa Clara Valley Transportation Authority

____NO EXCEPTIONS TAKEN (NET)
____MAKE CORRECTIONS NOTED (MCN)
____AMEND AND RESUBMIT (A/R)

Any action shown above is subject to the terms of the contract and does not relieve the Contractor of any of its obligations under the contract, including design and detailing.

Contract No.: DB11002F

By: _____ Date: _____

Not For Construction

REV	DATE	BY	SUB	APP	DESCRIPTION
0	20130710				READINESS FOR CONSTRUCTION

DESIGNED BY S. DEBNATH
DRAWN BY EAB/PPB
CHECKED BY E. BALLADA
IN CHARGE R. BARLAAN
DATE 20130710

LICENSED ARCHITECT SOMESH DEBNATH No. C21523 STATE OF CALIFORNIA

Skanska Shimmick Herzog
1436 California Circle
Milpitas, California 95035
A Joint Venture

Anil Verma Associates, Inc.
1970 Broadway, Suite 525, Oakland, CA 94612
Phone: (510) 835-2537 Fax: (510) 835-2339

Lockwood, Andrews & Newnam, Inc. A LEO A DALY COMPANY
T·Y·LIN INTERNATIONAL

SUBMITTED _____
APPROVED _____

NOT FOR CONSTRUCTION

VTA BART SILICON VALLEY
BART SILICON VALLEY BERRYESSA EXTENSION

LINE, TRACK, STATIONS AND SYSTEMS
DESIGN UNIT 023
MILPITAS STATION

POC DETAILED STAIR SECTION (PST1)

CADD FILENAME C700–S–DB–A576.dwg
SIZE D | SCALE 1/4"=1'–0"
CONTRACT NO. C700 | REV. 0
AREA CODE DB | SHEET NO. A576 | PAGE NO. 0471

JosephG Jun 26, 2013 – 2:49pm G:\Current Projects\VTA–Berryessa Extension Project\Station – Milpitas\CAD\Drawings Out\13–0710 C700 Milpitas Station – RFC Submittal\C700–S–DB–A576.dwg

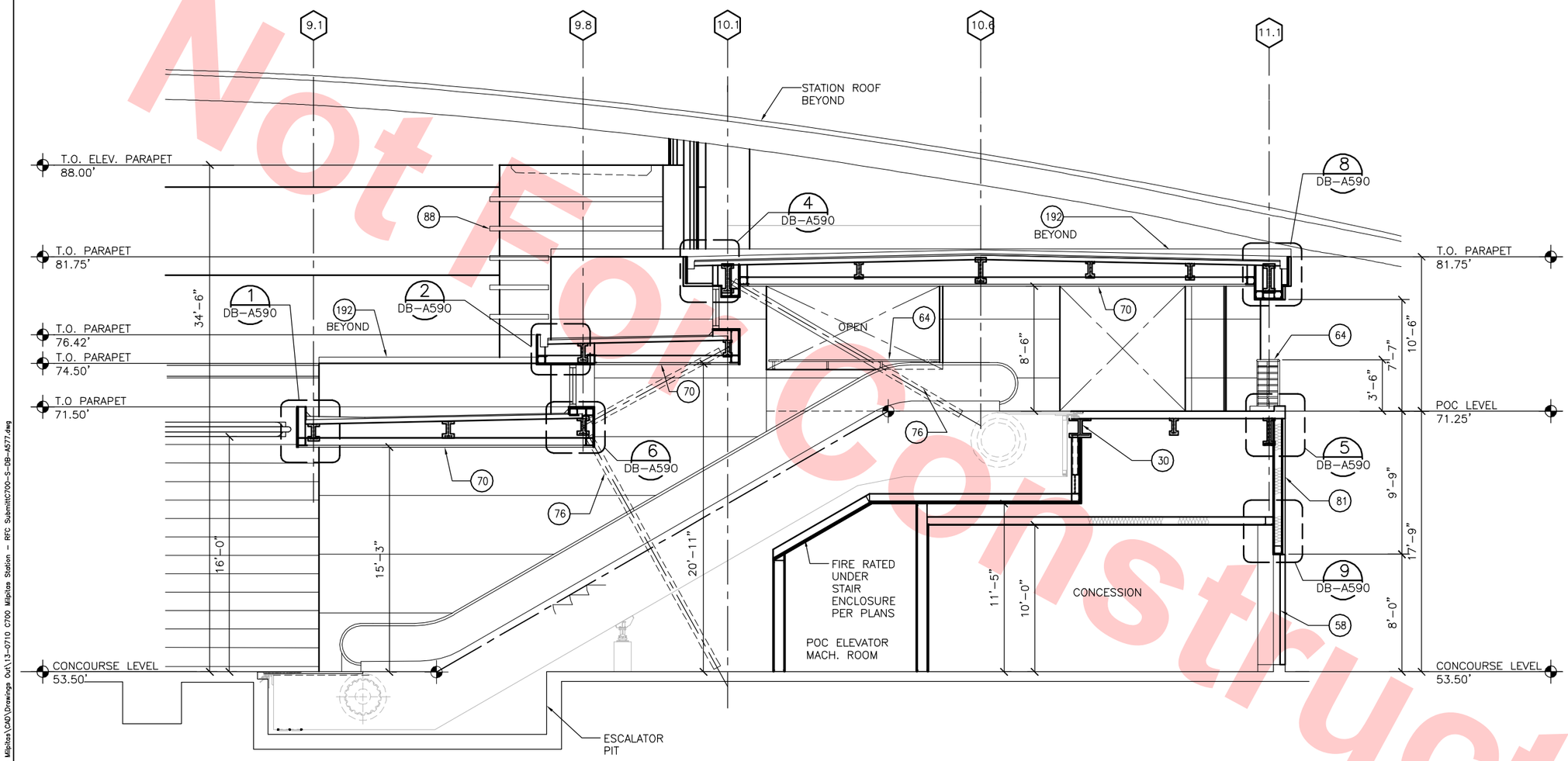

DETAILED ESCALATOR SECTION

SCALE: 1/4"=1'-0"

DB-A573
DB-A574
DB-A575

KEY NOTES

- (30) STRUCTURAL BEAM
- (58) GLASS WALL SYSTEM TYPE 2
- (64) METAL GUARDRAIL
- (70) CEILING TYPE 1– SUSPENDED LINEAR METAL CEILING SYSTEM
- (76) STRUCTURAL BRACING
- (81) COMPOSITE WALL PANEL WP–1, SEE DWG NO. DB–A701
- (88) 4"X8" ALUMINUM TUBE
- (192) 8" ROOF EXPANSION JOINT

Santa Clara Valley Transportation Authority

____NO EXCEPTIONS TAKEN (NET)
____MAKE CORRECTIONS NOTED (MCN)
____AMEND AND RESUBMIT (A/R)

Any action shown above is subject to the terms of the contract and does not relieve the Contractor of any of its obligations under the contract, including design and detailing.

Contract No.: DB11002F

By: _____ Date: _____

Not For Construction

REV	DATE	BY	SUB	APP	DESCRIPTION
0	20130710				READINESS FOR CONSTRUCTION

DESIGNED BY S. DEBNATH
DRAWN BY EAB/RC/PPB
CHECKED BY E. BALLADA
IN CHARGE R. BARLAAN
DATE 20130710

LICENSED ARCHITECT SURESH DEBNATH No. C21523 STATE OF CALIFORNIA

Skanska Shimmick Herzog
1436 California Circle
Milpitas, California 95035
A Joint Venture

Anil Verma Associates, Inc.
1970 Broadway, Suite 525, Oakland, CA 94612
Phone: (510) 835-2537 Fax: (510) 835-2339
SUBMITTED

Lockwood, Andrews & Newnam, Inc. A LEO A DALY COMPANY
T·Y·LIN INTERNATIONAL
APPROVED

VTA BART SILICON VALLEY
BART SILICON VALLEY BERRYESSA EXTENSION

LINE, TRACK, STATIONS AND SYSTEMS
DESIGN UNIT 023
MILPITAS STATION

POC PES1
DETAILED ESCALATOR SECTION

CADD FILENAME C700–S–DB–A577.dwg
SIZE D | SCALE 1/4"=1'–0"
CONTRACT NO. C700 | REV. 0
AREA CODE DB | SHEET NO. A577 | PAGE NO. 0472

Jun 26, 2013 – 2:49pm G:\Current Projects\VTA–Berryessa Extension Project\Station – Milpitas\CAD\Drawings Out\13–0710 C700 Milpitas Station – RFC Submit\C700–S–DB–A577.dwg
JosephG

Santa Clara Valley Transportation Authority

____NO EXCEPTIONS TAKEN (NET)
____MAKE CORRECTIONS NOTED (MCN)
____AMEND AND RESUBMIT (A/R)

Any action shown above is subject to the terms of the contract and does not relieve the Contractor of any of its obligations under the contract, including design and detailing.

Contract No.: DB11002F

By: _____ Date: _____

KEY NOTES

- (30) STRUCTURAL BEAM
- (70) CEILING TYPE 1– SUSPENDED LINEAR METAL CEILING SYSTEM
- (81) COMPOSITE WALL PANEL WP–1, SEE DWG NO. DB–A701
- (88) 4"X8" ALUMINUM TUBE
- (97) DOWNSPOUT/RAINWATER LEADER
- (113) METAL WALL PANEL WP–1, SEE DWG NO. DB–A701
- (118) KNOCK–OUT CONCRETE SLAB– SEE STRUCTURAL DRAWINGS
- (154) CEMENT PLASTER CEILING

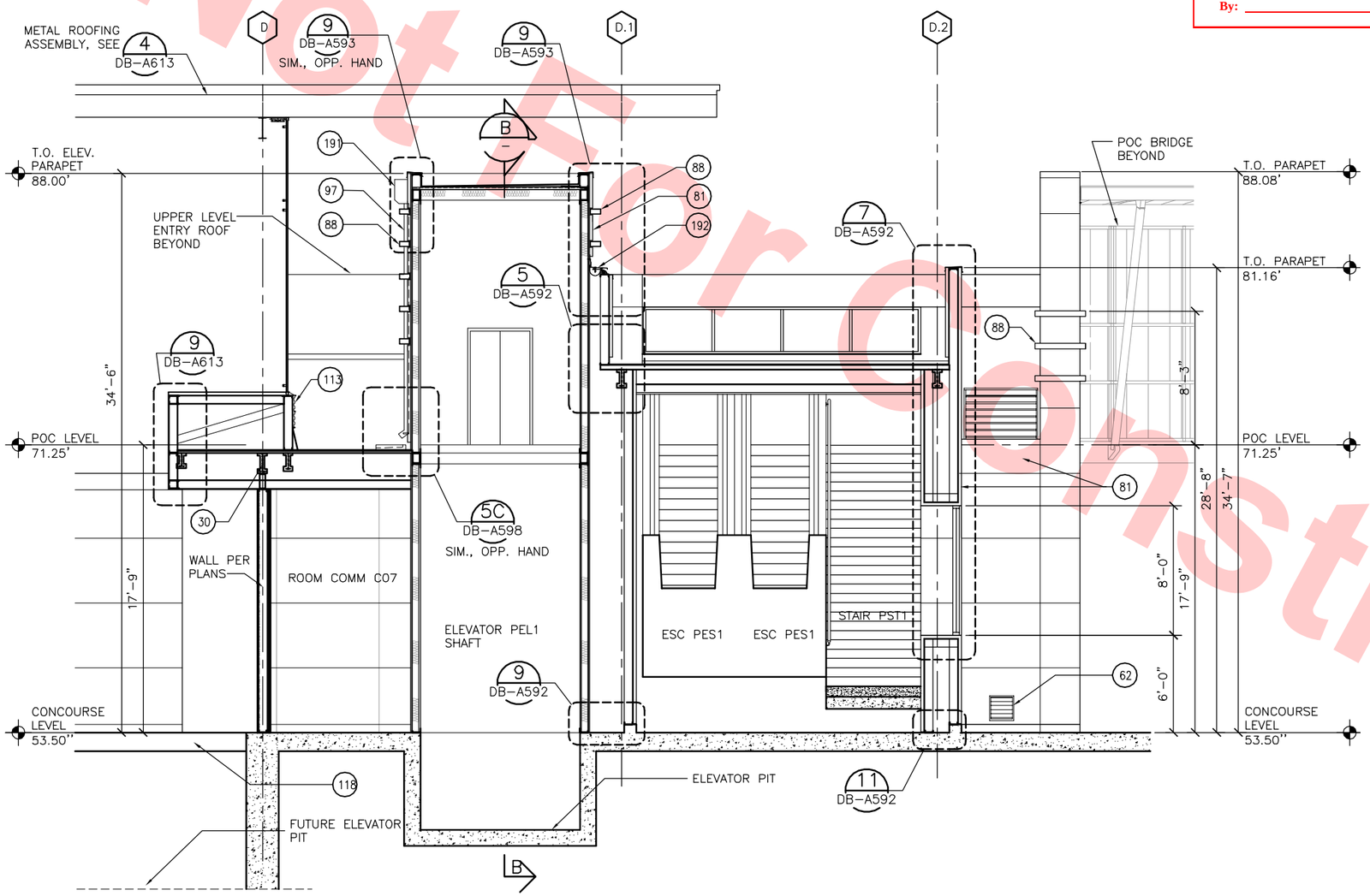

DETAILED SECTION (A)

PEL 1, PES1 & PST 1
SCALE: 1/4"=1'–0"

DB–A578 DB–A573 DB–A574 DB–A575

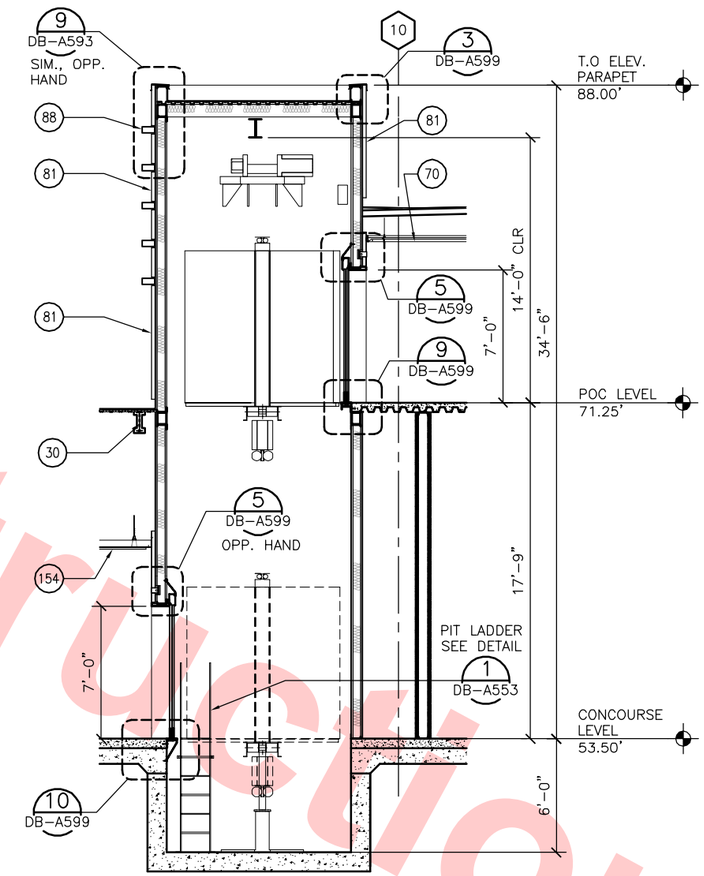

DETAILED SECTION (B)

PEL 1
SCALE: 1/4"=1'–0"

DB–A578 DB–A573 DB–A574 DB–A575

Not For Construction

REV	DATE	BY	SUB	APP	DESCRIPTION
0	20130710				READINESS FOR CONSTRUCTION

DESIGNED BY S. DEBNATH
DRAWN BY EAB/RC/PPB
CHECKED BY E. BALLADA
IN CHARGE R. BARLAAN
DATE 20130710

LICENSED ARCHITECT SOMESH DEBNATH No. C21523 STATE OF CALIFORNIA

Skanska Shimmick Herzog
1436 California Circle
Milpitas, California 95035
A Joint Venture

Anil Verma Associates, Inc.
1970 Broadway, Suite 525, Oakland, CA 94612
Phone: (510) 835-2537 Fax: (510) 835-2339
SUBMITTED

Lockwood, Andrews & Newnam, Inc. A LAN & BAIN COMPANY
T-Y-LIN INTERNATIONAL
APPROVED

VTA BART SILICON VALLEY
BART SILICON VALLEY BERRYESSA EXTENSION

LINE, TRACK, STATIONS AND SYSTEMS DESIGN UNIT 023
MILPITAS STATION

POC STAIR, ESCALATOR & ELEVATOR DETAILED SECTIONS

CADD FILENAME C700–S–DB–A578.dwg
SIZE D | SCALE 1/4"=1'–0"
CONTRACT NO. C700 | REV. 0
AREA CODE DB | SHEET NO. A578 | PAGE NO. 0473

Jun 26, 2013 – 2:50pm G:\Current Projects\VTA–Berryessa Extension Project\Station – Milpitas\CAD\Drawings Out\13–0710 C700 Milpitas Station – RFC Submit\C700–S–DB–A578.dwg
JosephG

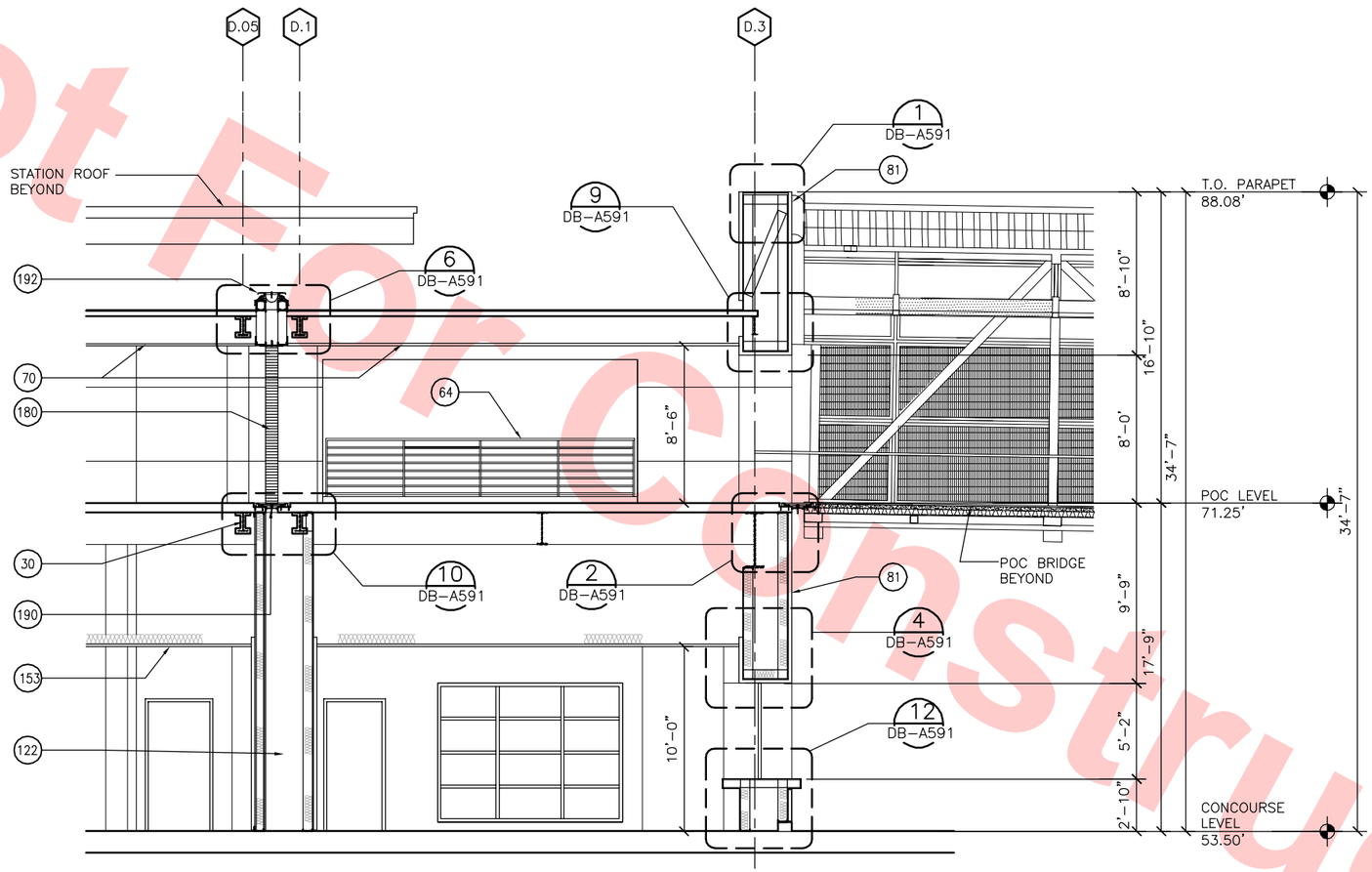

DETAILED SECTION

SCALE: 1/4"=1'–0"

DB–A573
DB–A574
DB–A575

KEY NOTES

- (30) STRUCTURAL BEAM
- (64) METAL GUARDRAIL
- (70) CEILING TYPE 1– SUSPENDED LINEAR METAL CEILING SYSTEM
- (81) COMPOSITE WALL PANEL WP–1, SEE DWG DB A–701
- (122) SHAFT
- (153) CEILING TYPE 2– SUSPENDED 24"x60" METAL PLANK CEILING SYSTEM
- (180) 8" WALL EXPANSION JOINT COVER
- (190) 8" FLOOR EXPANSION JOINT
- (192) 8" ROOF EXPANSION JOINT

Santa Clara Valley Transportation Authority

____NO EXCEPTIONS TAKEN (NET)
____MAKE CORRECTIONS NOTED (MCN)
____AMEND AND RESUBMIT (A/R)

Any action shown above is subject to the terms of the contract and does not relieve the Contractor of any of its obligations under the contract, including design and detailing.

Contract No.: DB11002F

By: _____ Date: _____

Not For Construction

REV	DATE	BY	SUB	APP	DESCRIPTION
0	20130710				READINESS FOR CONSTRUCTION

DESIGNED BY S. DEBNATH
DRAWN BY EAB/RC/PPB
CHECKED BY E. BALLADA
IN CHARGE R. BARLAAN
DATE 20130710

LICENSED ARCHITECT SOMESH DEBNATH No. C21523 STATE OF CALIFORNIA

Skanska Shimmick Herzog
1436 California Circle
Milpitas, California 95035
A Joint Venture

Anil Verma Associates, Inc.
1970 Broadway, Suite 525, Oakland, CA 94612
Phone: (510) 835-2537 Fax: (510) 835-2339

SUBMITTED

Lockwood, Andrews & Newnam, Inc. A LEO A DALY COMPANY
T·Y·LIN INTERNATIONAL

APPROVED

VTA BART SILICON VALLEY
BART SILICON VALLEY BERRYESSA EXTENSION

LINE, TRACK, STATIONS AND SYSTEMS
DESIGN UNIT 023
MILPITAS STATION

POC DETAILED SECTION

CADD FILENAME C700–S–DB–A579.dwg
SIZE D | SCALE 1/4"=1'–0"
CONTRACT NO. C700 | REV. 0
AREA CODE DB | SHEET NO. A579 | PAGE NO. 0474

JosephG Jun 26, 2013 – 2:51pm G:\Current Projects\VTA–Berryessa Extension Project\Station – Milpitas\CAD\Drawings Out\13–0710 C700 Milpitas Station – RFC Submit\C700–S–DB–A579.dwg

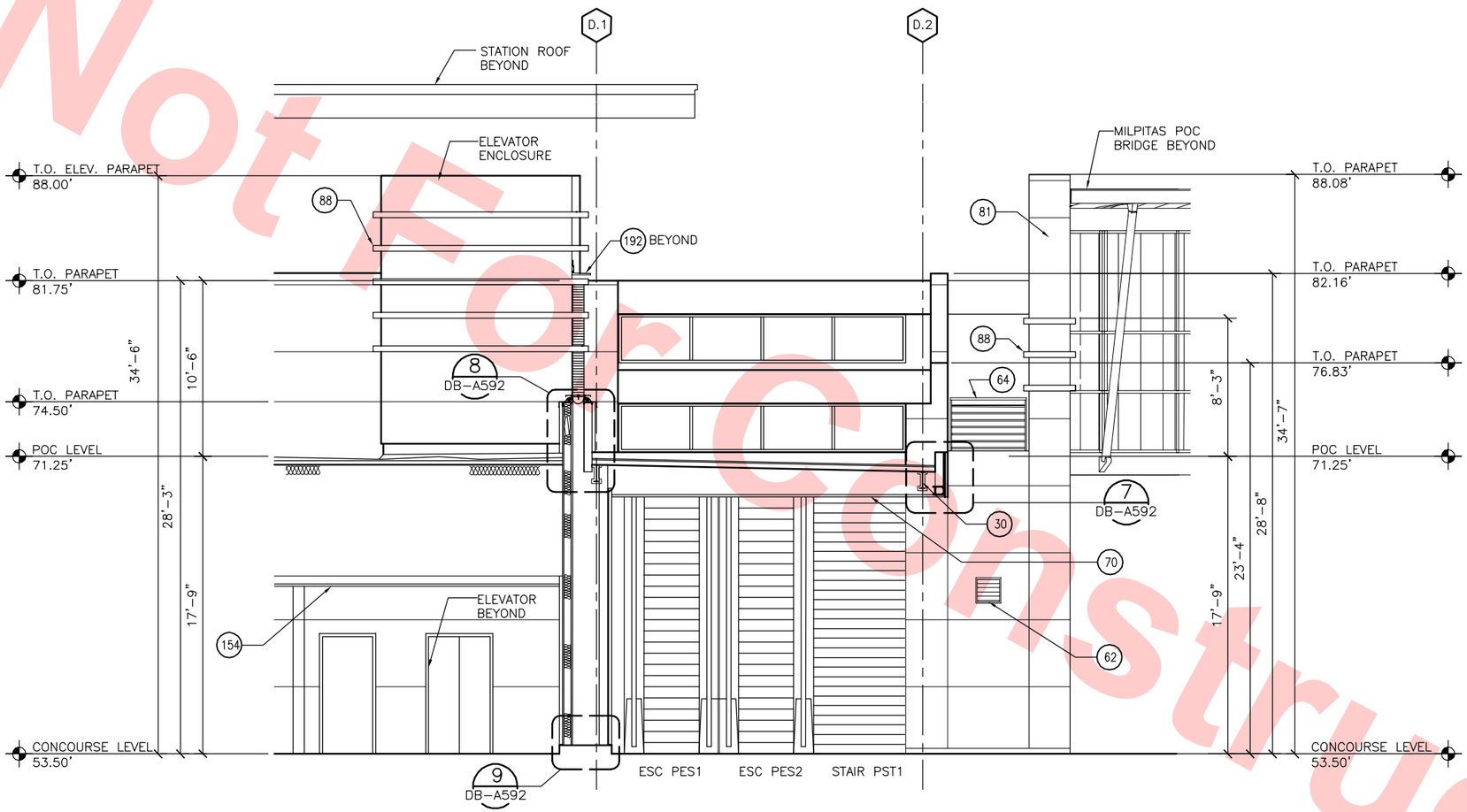

DETAILED FRONT ELEVATION/SECTION

SCALE: 1/4"=1'-0"

DB-A573
DB-A574
DB-A574

KEY NOTES

- (30) STRUCTURAL BEAM
- (62) LOUVER
- (64) METAL GUARDRAIL
- (70) CEILING TYPE 1- SUSPENDED LINEAR METAL CEILING SYSTEM
- (81) COMPOSITE WALL PANEL WP-1, SEE DWG NO. DB-A701
- (88) 4"X8" ALUMINUM TUBE
- (154) CEMENT PLASTER CEILING
- (192) 8" ROOF EXPANSION JOINT

Santa Clara Valley Transportation Authority

____NO EXCEPTIONS TAKEN (NET)
____MAKE CORRECTIONS NOTED (MCN)
____AMEND AND RESUBMIT (A/R)

Any action shown above is subject to the terms of the contract and does not relieve the Contractor of any of its obligations under the contract, including design and detailing.

Contract No.: DB11002F

By: _____ Date: _____

4' 0' 4' 16'
GRAPHIC SCALE

Not For Construction

REV	DATE	BY	SUB	APP	DESCRIPTION
0	20130710				READINESS FOR CONSTRUCTION

DESIGNED BY S. DEBNATH
DRAWN BY RC/PPB
CHECKED BY E. BALLADA
IN CHARGE R. BARLAAN
DATE 20130710

LICENSED ARCHITECT SURESH DEBNATH No. C21523 STATE OF CALIFORNIA

Skanska Shimmick Herzog
1436 California Circle
Milpitas, California 95035
A Joint Venture

Anil Verma Associates, Inc.
1970 Broadway, Suite 525, Oakland, CA 94612
Phone: (510) 835-2537 Fax: (510) 835-2339
SUBMITTED

Lockwood, Andrews & Newnam, Inc. A LEO A DALY COMPANY
T·Y·LIN INTERNATIONAL
APPROVED

VTA BART SILICON VALLEY
BART SILICON VALLEY BERRYESSA EXTENSION

LINE, TRACK, STATIONS AND SYSTEMS
DESIGN UNIT 023
MILPITAS STATION
POC DETAILED ELEVATION/SECTION
DETAILED FRONT ELEVATION/SECTION

CADD FILENAME C700-S-DB-A580.dwg
SIZE D | SCALE 1/4"=1'-0"
CONTRACT NO. C700 | REV. 0
AREA CODE DB | SHEET NO. A580 | PAGE NO. 0475

JosephG Jun 26, 2013 - 2:53pm G:\Current Projects\VTA-Berryessa Extension Project\Station - Milpitas\CAD\Drawings Out\13-0710 C700 Milpitas Station - RFC Submit\C700-S-DB-A580.dwg

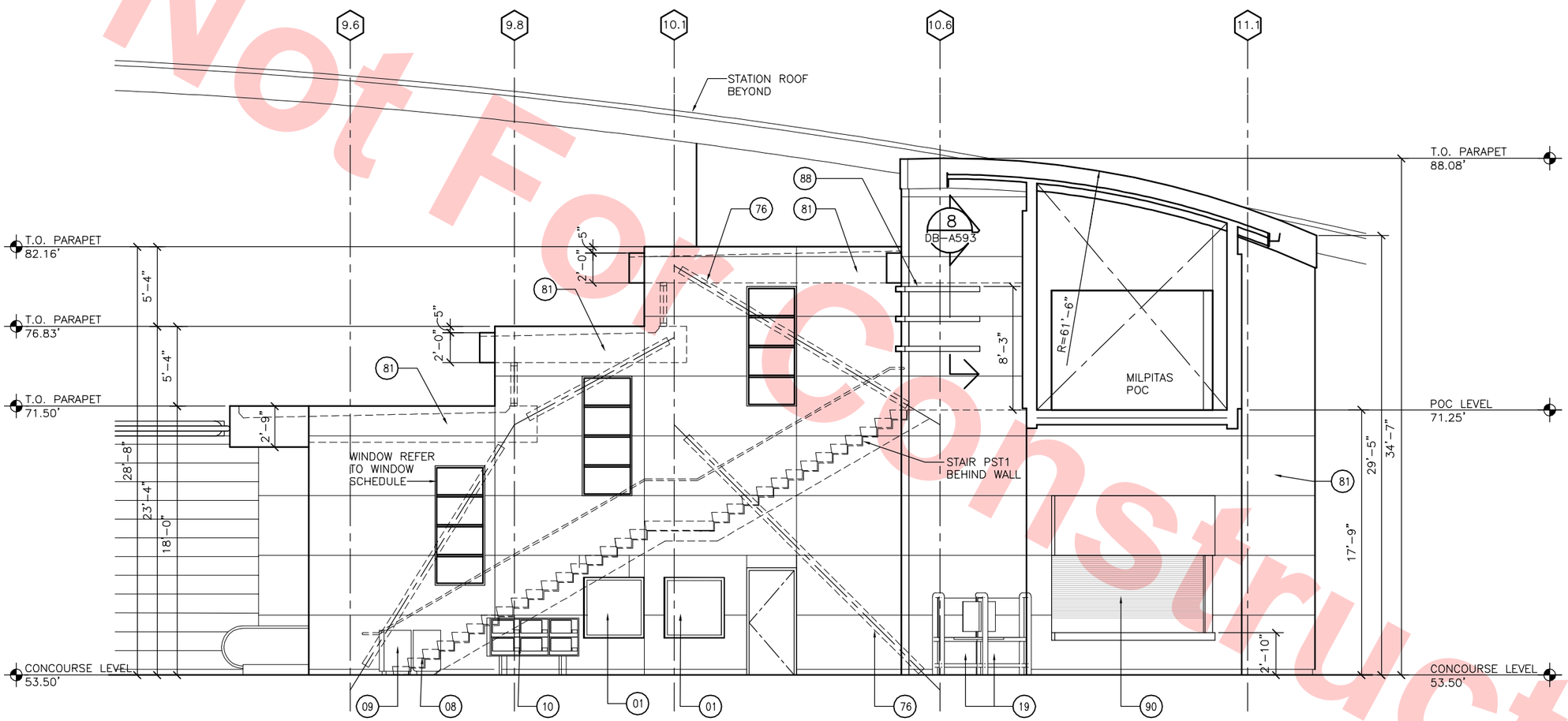

DETAILED EAST ELEVATION

SCALE: 1/4"=1'-0"

DB-A573
DB-A574
DB-A575

KEY NOTES

- (01) MAPCASE – WALL MOUNTED, SEE BFS DET 4/AS83
- (08) TRASH RECEPTACLE
- (09) NEWSPAPER RECYCLING RECEPTACLE (NIC)
- (10) NEWSPAPER RACK
- (19) PUBLIC PAY PHONE(S)
- (29) STRUCTURAL COLUMN
- (48) HANDRAIL – METAL
- (58) GLASS WALL SYSTEM TYPE 1
- (76) STRUCTURAL BRACING
- (81) COMPOSITE WALL PANEL WP-1, SEE DWG NO. DB-A701
- (88) 4"X8" ALUMINUM TUBE
- (90) INSULATED ROLL-UP COUNTER DOOR
- (97) DOWNSPOUT/RAINWATER LEADER
- (181) 8" WALL EXPANSION JOINT

Santa Clara Valley Transportation Authority

____NO EXCEPTIONS TAKEN (NET)
____MAKE CORRECTIONS NOTED (MCN)
____AMEND AND RESUBMIT (A/R)

Any action shown above is subject to the terms of the contract and does not relieve the Contractor of any of its obligations under the contract, including design and detailing.

Contract No.: DB11002F

By: _____ **Date:** _____

4' 0' 4' 16'
GRAPHIC SCALE

Not For Construction

REV	DATE	BY	SUB	APP	DESCRIPTION
0	20130710				READINESS FOR CONSTRUCTION

DESIGNED BY S. DEBNATH
DRAWN BY EAB/RC
CHECKED BY E. BALLADA
IN CHARGE R. BARLAAN
DATE 20130710

LICENSED ARCHITECT JAMESH DEBNATH No. C21523 STATE OF CALIFORNIA

Skanska Shimmick Herzog
1436 California Circle
Milpitas, California 95035
A Joint Venture

Anil Verma Associates, Inc.
1970 Broadway, Suite 525 Oakland, CA 94612
Phone: (510) 835-2537 Fax: (510) 535-2339

Lockwood, Andrews & Newnam, Inc. A LAN & BALY COMPANY
T·Y·LIN INTERNATIONAL

SUBMITTED _____
APPROVED _____

VTA BART SILICON VALLEY
BART SILICON VALLEY BERRYESSA EXTENSION

LINE, TRACK, STATIONS AND SYSTEMS
DESIGN UNIT 023
MILPITAS STATION

POC DETAILED EAST ELEVATION

CADD FILENAME C700-S-DB-A581.dwg
SIZE D | SCALE 1/4"=1'-0"
CONTRACT NO. C700 | REV. 0
AREA CODE DB | SHEET NO. A581 | PAGE NO. 0476

JosephG Jun 26, 2013 – 2:53pm G:\Current Projects\VTA-Berryessa Extension Project\Station – Milpitas\CAD\Drawings Out\13-0710 C700 Milpitas Station – RFC Submit\C700-S-DB-A581.dwg

Not For Construction

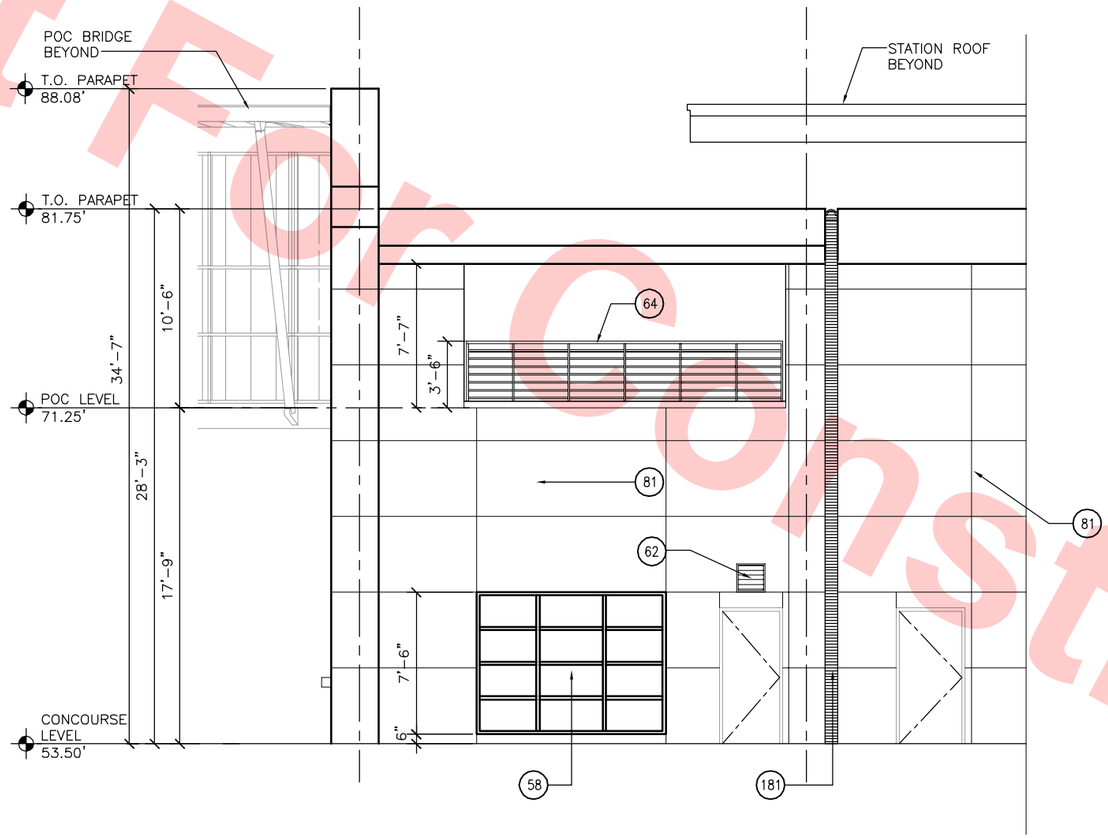

DETAILED SOUTH ELEVATION

SCALE: 1/4"=1'-0"

DB-A573
DB-A574
DB-A575

KEY NOTES

- 58 GLASS WALL SYSTEM TYPE 2
- 64 METAL GUARDRAIL
- 62 LOUVER
- 81 COMPOSITE WALL PANEL WP-1, SEE DWG DB A-701
- 181 8" WALL EXPANSION JOINT

Santa Clara Valley Transportation Authority

____NO EXCEPTIONS TAKEN (NET)
____MAKE CORRECTIONS NOTED (MCN)
____AMEND AND RESUBMIT (A/R)

Any action shown above is subject to the terms of the contract and does not relieve the Contractor of any of its obligations under the contract, including design and detailing.

Contract No.: DB11002F

By: _____ Date: _____

4' 0' 4' 16'
GRAPHIC SCALE

REV	DATE	BY	SUB	APP	DESCRIPTION
0	20130710				READINESS FOR CONSTRUCTION

DESIGNED BY S. DEBNATH
DRAWN BY EAB/RC/PPB
CHECKED BY E. BALLADA
IN CHARGE R. BARLAAN
DATE 20130710

LICENSED ARCHITECT SOMESH DEBNATH No. C21523 STATE OF CALIFORNIA

Skanska Shimmick Herzog
1436 California Circle
Milpitas, California 95035
A Joint Venture

Anil Verma Associates, Inc.
1970 Broadway, Suite 525 Oakland, CA 94612
Phone: (510) 835-2537 Fax: (510) 835-2339
SUBMITTED

Lockwood, Andrews & Newnam, Inc. A LAN & BALL COMPANY
T·Y·LIN INTERNATIONAL
APPROVED

VTA BART SILICON VALLEY
BART SILICON VALLEY BERRYESSA EXTENSION

LINE, TRACK, STATIONS AND SYSTEMS
DESIGN UNIT 023
MILPITAS STATION

POC DETAILED SOUTH ELEVATION

CADD FILENAME C700-S-DB-A582.dwg
SIZE D | SCALE 1/4"=1'-0"
CONTRACT NO. C700 | REV. 0
AREA CODE DB | SHEET NO. A582 | PAGE NO. 0477

JosephG Jun 26, 2013 – 2:54pm G:\Current Projects\VTA-Berryessa Extension Project\Station – Milpitas\CAD\Drawings Out\13-0710 C700 Milpitas Station – RFC Submit\C700-S-DB-A582.dwg

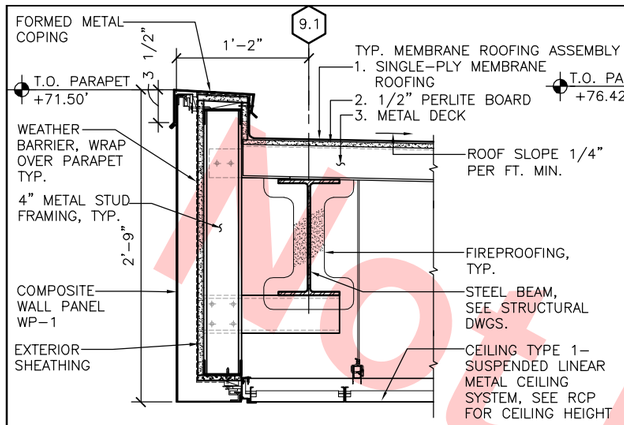

PARAPET DETAIL (1 / DB-A590 / DB-A576)
SCALE: 1 1/2"=1'-0"

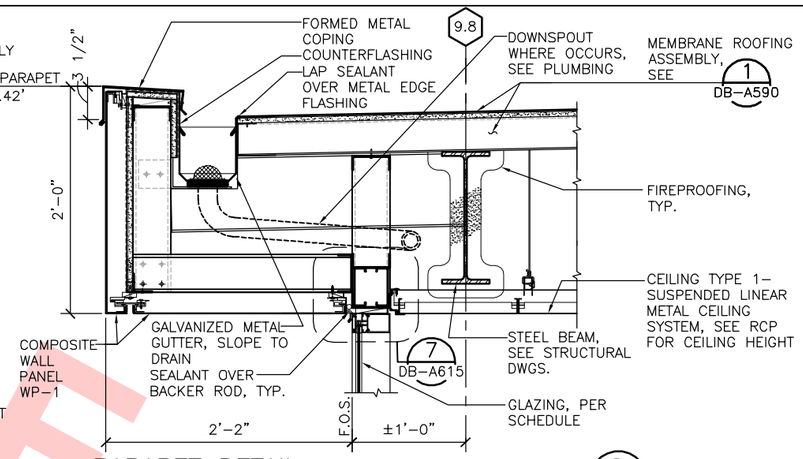

PARAPET DETAIL (2 / DB-A590 / DB-A576)
SCALE: 1 1/2"=1'-0"

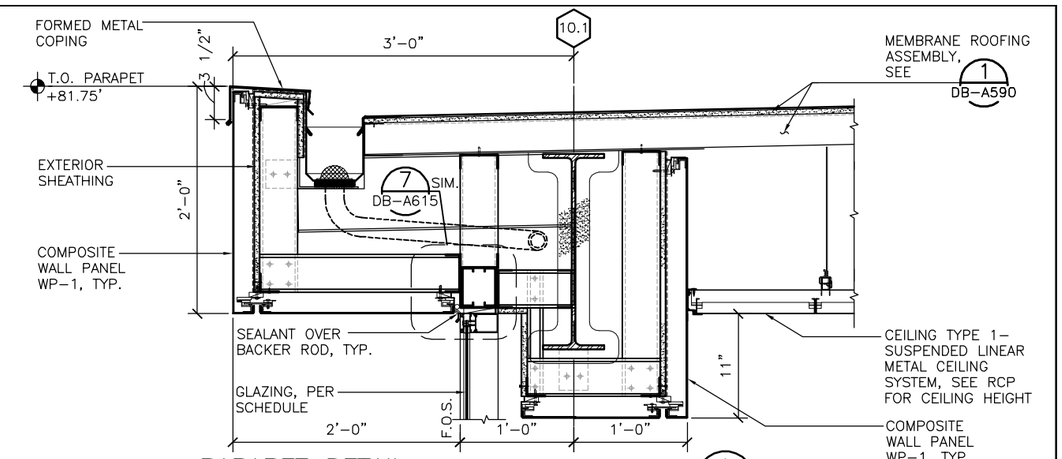

PARAPET DETAIL (4 / DB-A590 / DB-A576)
SCALE: 1 1/2"=1'-0"

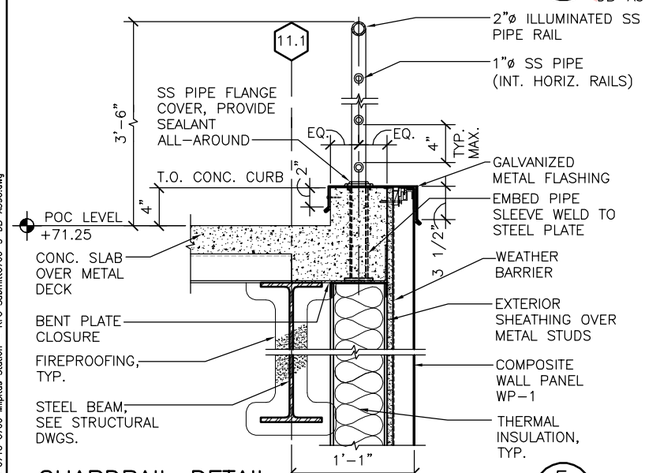

GUARDRAIL DETAIL (5 / DB-A590 / DB-A576)
SCALE: 1 1/2"=1'-0"

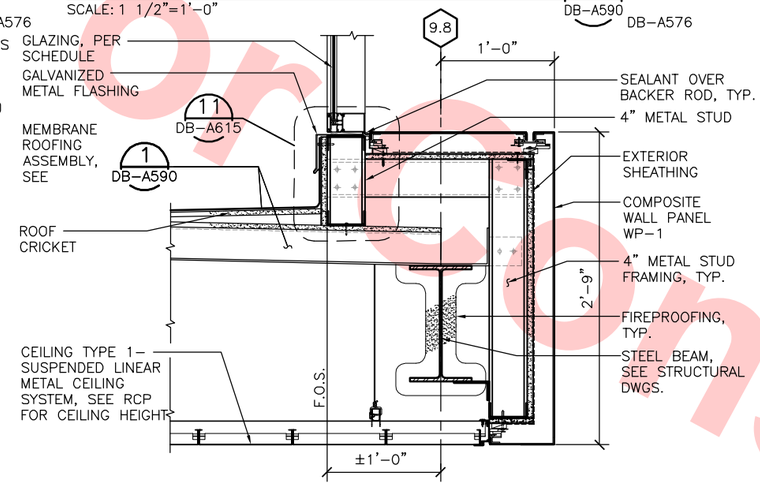

WINDOW SILL/ROOF FLASHING DETAIL (6 / DB-A590 / DB-A576)
SCALE: 1 1/2"=1'-0"

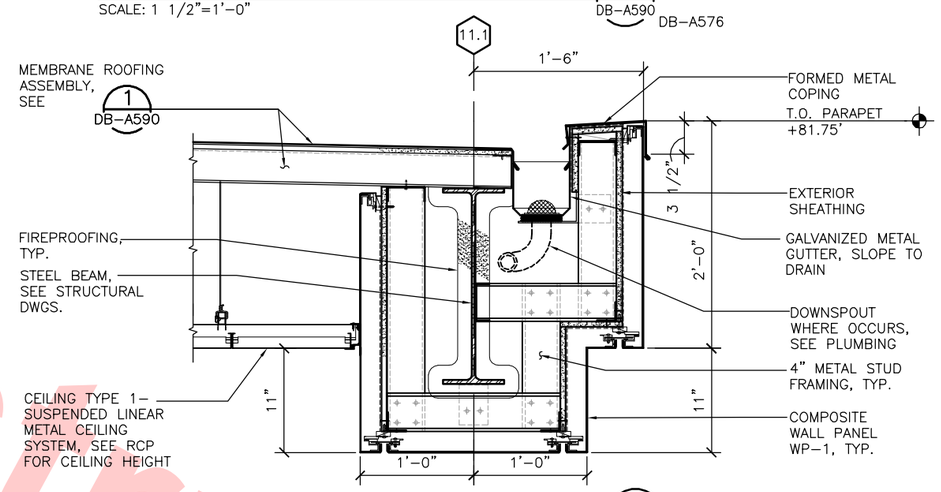

PARAPET DETAIL (8 / DB-A590 / DB-A576)
SCALE: 1 1/2"=1'-0"

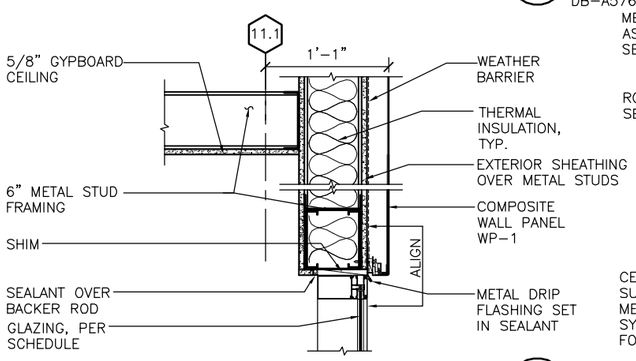

WINDOW HEAD DETAIL (9 / DB-A590 / DB-A576)
SCALE: 1 1/2"=1'-0"

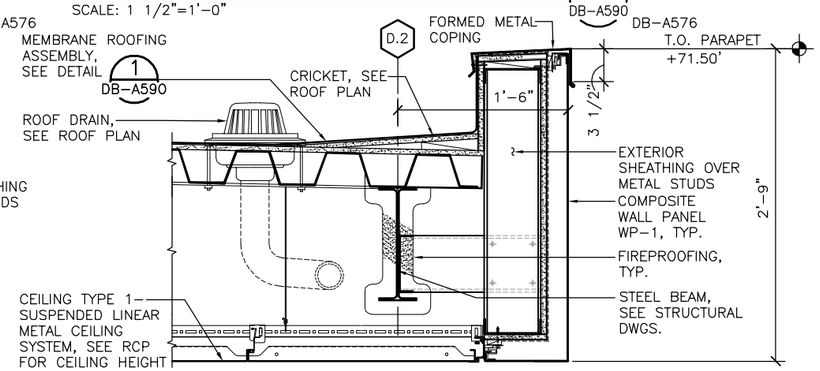

PARAPET DETAIL (10 / DB-A590 / DB-A580)
SCALE: 1 1/2"=1'-0"

Santa Clara Valley Transportation Authority

____NO EXCEPTIONS TAKEN (NET)
____MAKE CORRECTIONS NOTED (MCN)
____AMEND AND RESUBMIT (A/R)

Any action shown above is subject to the terms of the contract and does not relieve the Contractor of any of its obligations under the contract, including design and detailing.

Contract No.: DB11002F

By: _____ **Date:** _____

Not for Construction

REV	DATE	BY	SUB	APP	DESCRIPTION
0	20130710				READINESS FOR CONSTRUCTION

DESIGNED BY S. DEBNATH
DRAWN BY P. BALOGO
CHECKED BY E. BALLADA
IN CHARGE R. BARLAAN
DATE 20130710

LICENSED ARCHITECT — SOMESH DEBNATH — No. C21523 — STATE OF CALIFORNIA

Skanska Shimmick Herzog — 1436 California Circle, Milpitas, California 95035 — A Joint Venture

Anil Verma Associates, Inc. — 1970 Broadway, Suite 525, Oakland, CA 94612 — Phone: (510) 835-2537, Fax: (510) 535-2339

Lockwood, Andrews & Newnam, Inc. — A LAN & BALY COMPANY

T·Y·LIN INTERNATIONAL

SUBMITTED _____ APPROVED _____

VTA BART SILICON VALLEY
BART SILICON VALLEY BERRYESSA EXTENSION

LINE, TRACK, STATIONS AND SYSTEMS DESIGN UNIT 023
MILPITAS STATION
POC CANOPY DETAILS

CADD FILENAME C700-S-DB-A590.dwg
SIZE D | SCALE 1 1/2"=1'-0"
CONTRACT NO. C700 | REV. 0
AREA CODE DB | SHEET NO. A590 | PAGE NO. 0478

JosephG Jun 26, 2013 - 2:55pm G:\Current Projects\VTA-Berryessa Extension Project\Station - Milpitas\CAD\Drawings Out\13-0710 C700 Milpitas Station - RFC Submit\C700-S-DB-A590.dwg

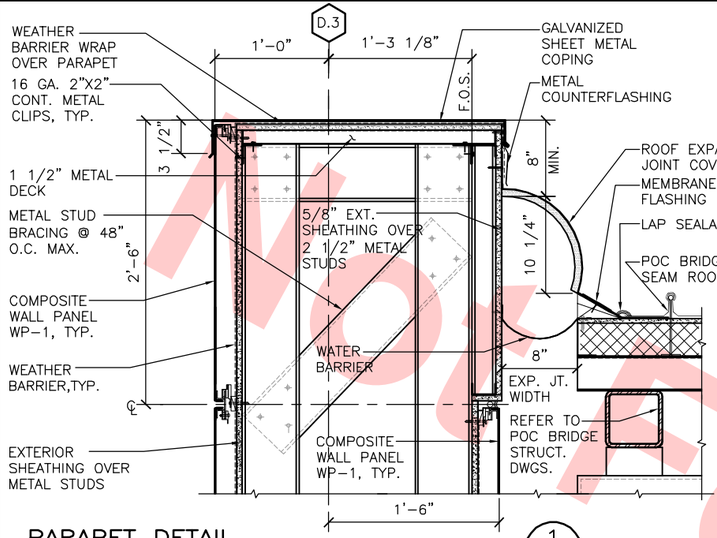

PARAPET DETAIL (1 / DB-A591) DB-A579

SCALE: 1 1/2"=1'-0"

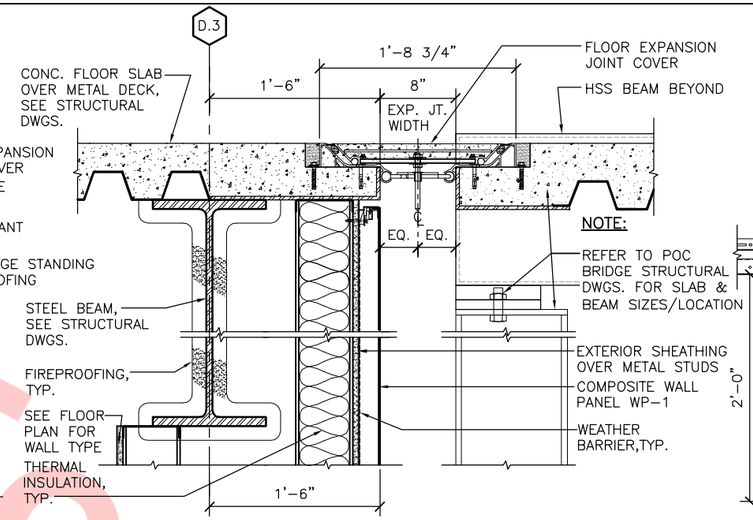

FLOOR EXPANSION JT. DETAIL (2 / DB-A591) DB-A579

SCALE: 1 1/2"=1'-0"

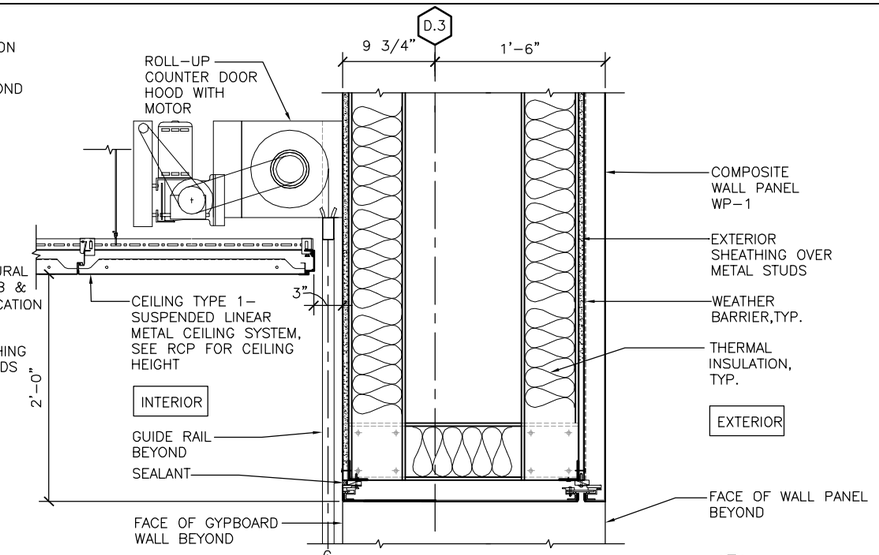

COUNTER DOOR HEAD DETAIL (4 / DB-A591) DB-A579

SCALE: 1 1/2"=1'-0"

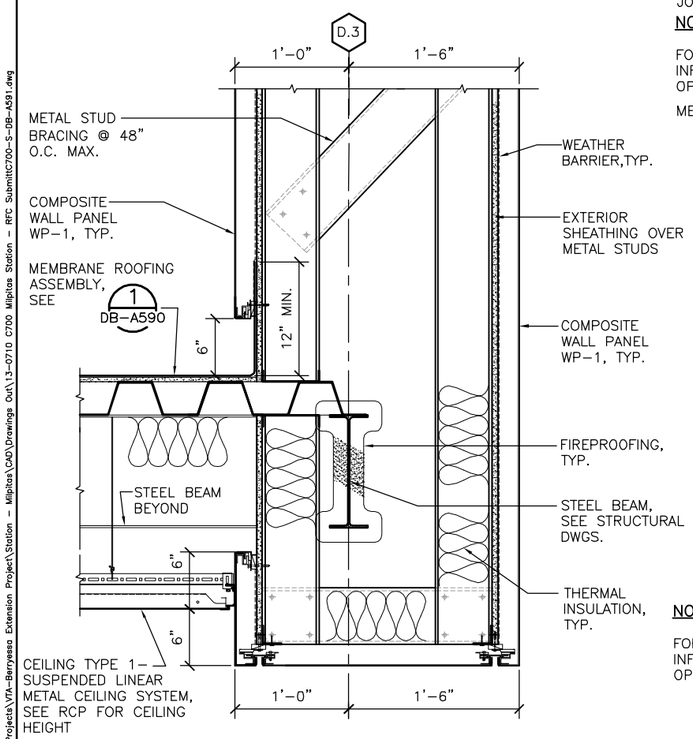

ROOF/SOFFIT DETAIL (9 / DB-A591) DB-A579

SCALE: 1 1/2"=1'-0"

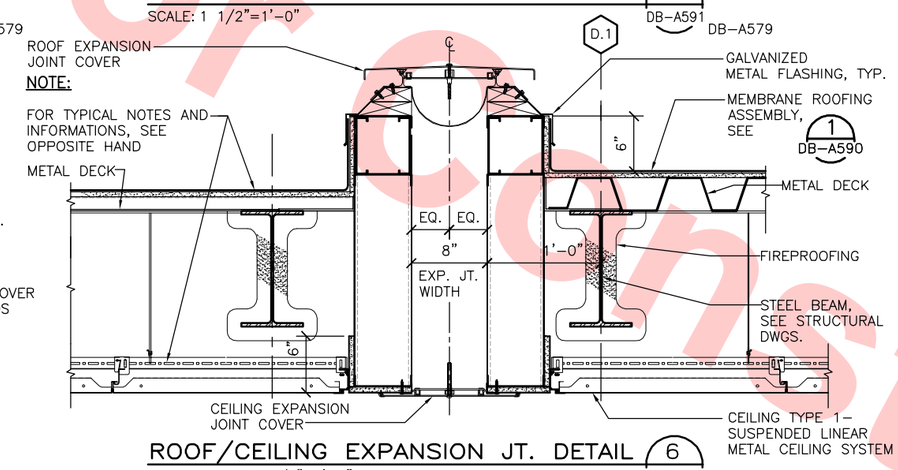

ROOF/CEILING EXPANSION JT. DETAIL (6 / DB-A590) DB-A579

SCALE: 1 1/2"=1'-0"

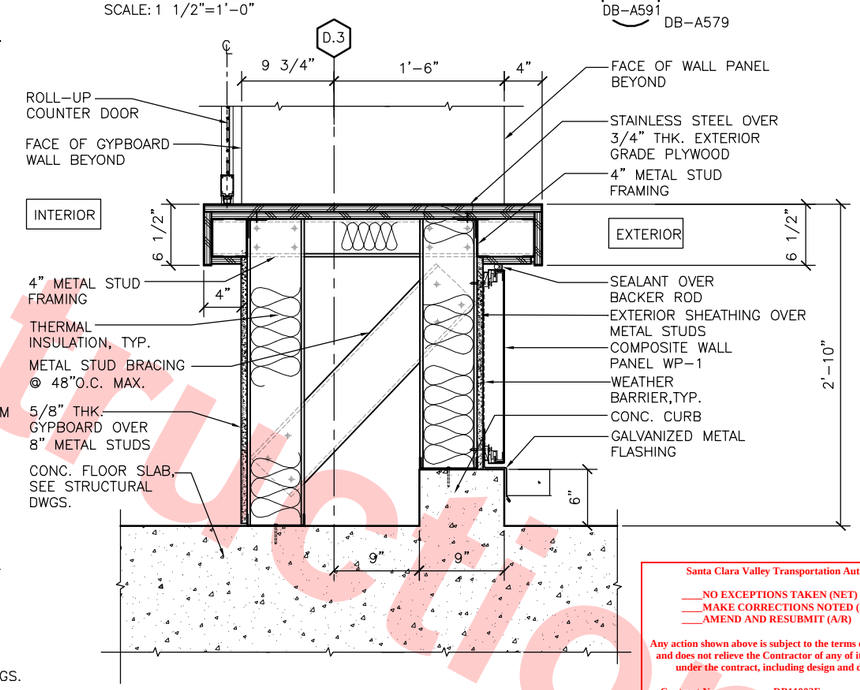

COUNTER DOOR SILL DETAIL (12 / DB-A591) DB-A579

SCALE: 1 1/2"=1'-0"

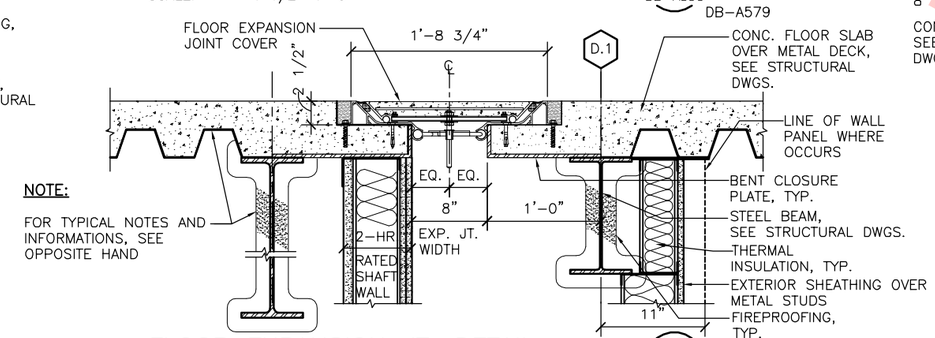

NOTE:

FOR TYPICAL NOTES AND INFORMATIONS, SEE OPPOSITE HAND

FLOOR EXPANSION JT. DETAIL (10 / DB-A591) DB-A579

SCALE: 1 1/2"=1'-0"

Santa Clara Valley Transportation Authority

____NO EXCEPTIONS TAKEN (NET)
____MAKE CORRECTIONS NOTED (MCN)
____AMEND AND RESUBMIT (A/R)

Any action shown above is subject to the terms of the contract and does not relieve the Contractor of any of its obligations under the contract, including design and detailing.

Contract No.: DB11002F

By: _____ Date: _____

Not For Construction

REV	DATE	BY	SUB	APP	DESCRIPTION
0	20130710				READINESS FOR CONSTRUCTION

DESIGNED BY S. DEBNATH
DRAWN BY P. BALOGO
CHECKED BY E. BALLADA
IN CHARGE R. BARLAAN
DATE 20130710

LICENSED ARCHITECT SOMESH DEBNATH No. C21523 STATE OF CALIFORNIA

Skanska Shimmick Herzog
1436 California Circle Milpitas, California 95035
A Joint Venture

Anil Verma Associates, Inc.
1970 Broadway, Suite 325 Oakland, CA 94612
Phone: (510) 835-2537 Fax: (510) 535-2339
SUBMITTED

Lockwood, Andrews & Newnam, Inc. A LAN & RALY COMPANY
T·Y·LIN INTERNATIONAL
APPROVED

VTA BART SILICON VALLEY
BART SILICON VALLEY BERRYESSA EXTENSION

LINE, TRACK, STATIONS AND SYSTEMS DESIGN UNIT 023
MILPITAS STATION
POC DETAILS

CADD FILENAME C700-S-DB-A591.dwg
SIZE D | SCALE 1 1/2"=1'-0"
CONTRACT NO. C700 | REV. 0
AREA CODE DB | SHEET NO. A591 | PAGE NO. 0479

JosephG Jun 26, 2013 - 2:56pm G:\Current Projects\VTA-Berryessa Extension Project\Station - Milpitas\CAD\Drawings Out\13-0710 C700 Milpitas Station - RFC Submit\C700-S-DB-A591.dwg

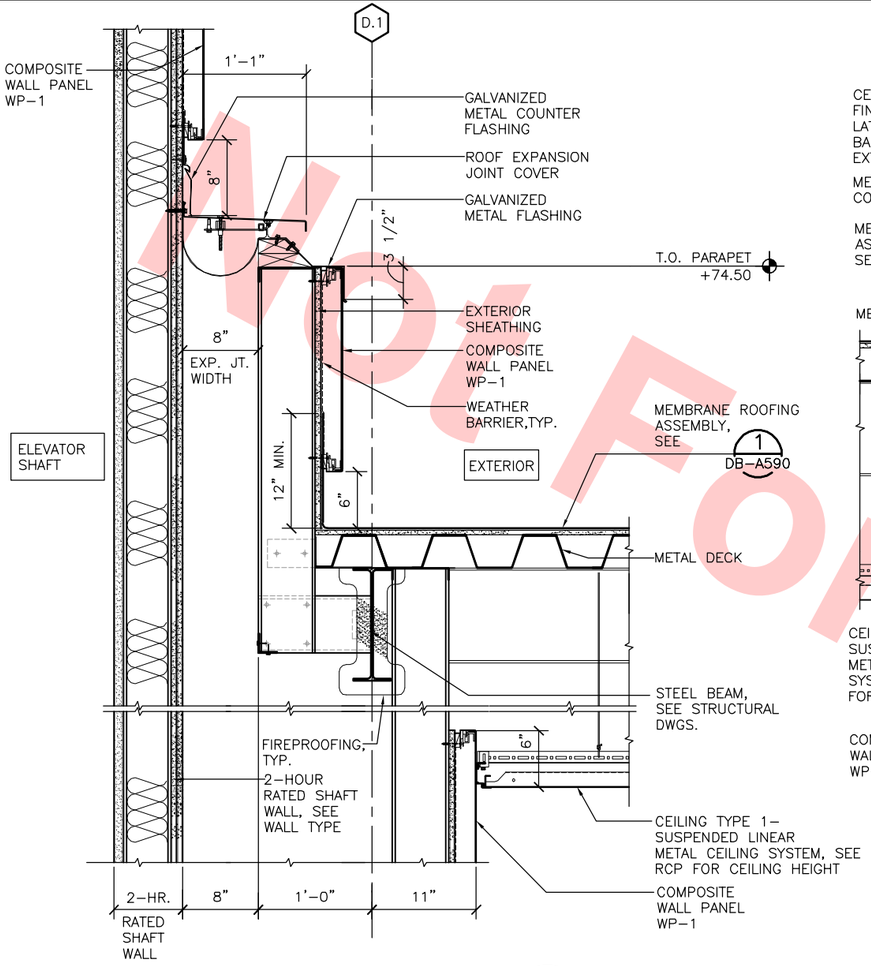

ROOF EXPANSION JT. @ ELEV. SHAFT 5
SCALE: 1 1/2"=1'-0"
DB-A592 DB-A578

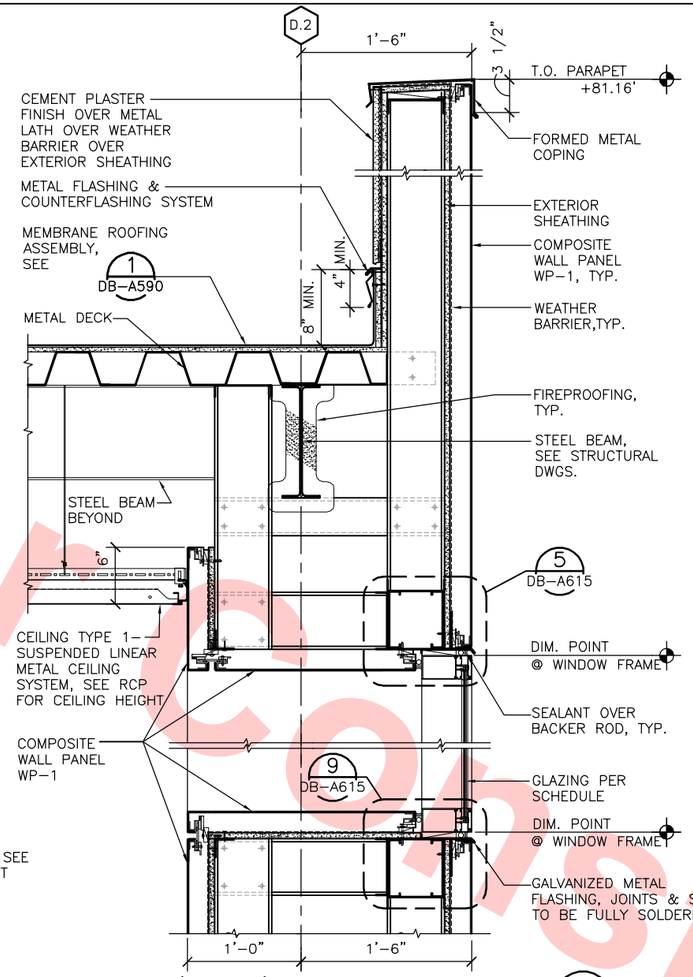

PARAPET/HEAD/SILL DETAIL 7
SCALE: 1 1/2"=1'-0"
DB-A592 DB-A578

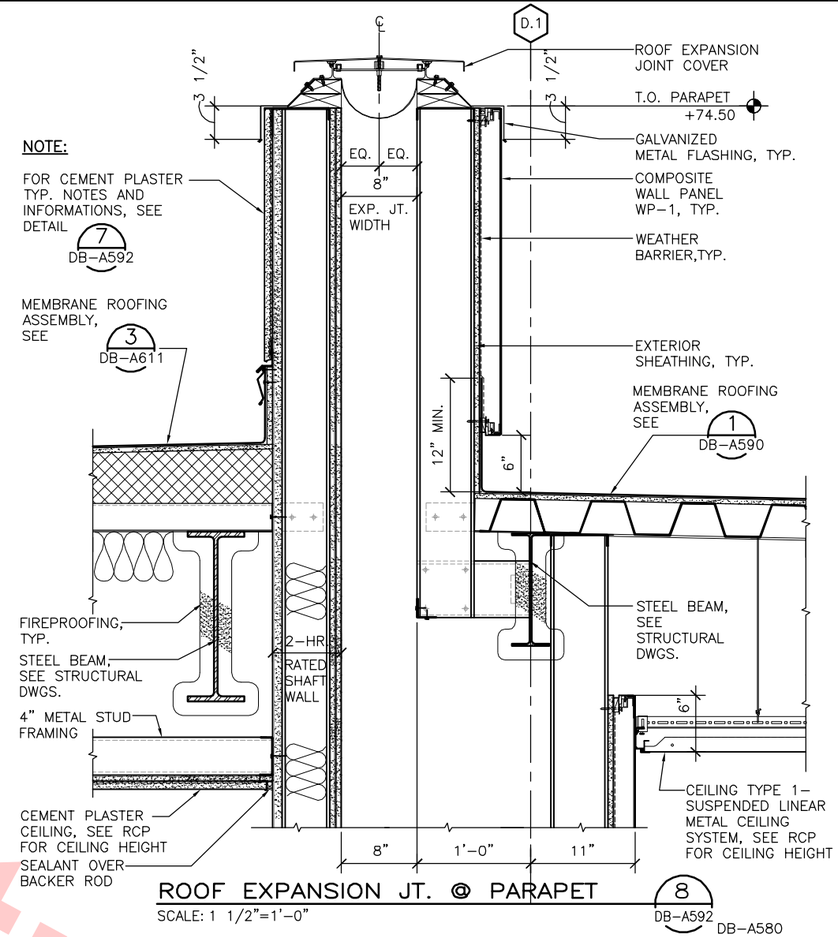

ROOF EXPANSION JT. @ PARAPET 8
SCALE: 1 1/2"=1'-0"
DB-A592 DB-A580

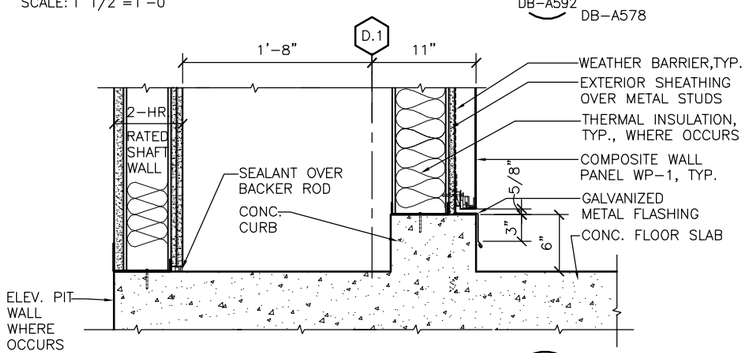

WALL PANEL BASE DETAIL 9
SCALE: 1 1/2"=1'-0"
DB-A592 DB-A580

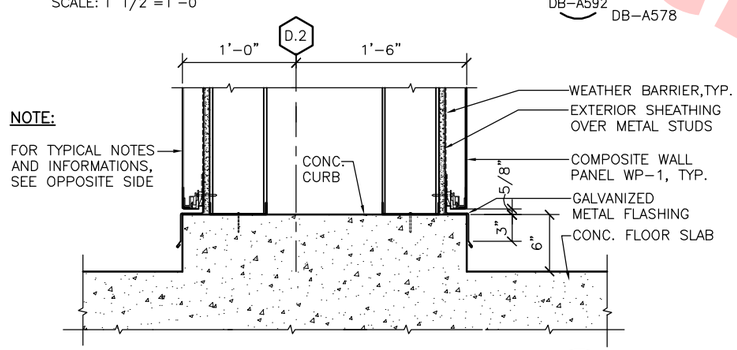

WALL PANEL BASE DETAIL 11
SCALE: 1 1/2"=1'-0"
DB-A592 DB-A578

Santa Clara Valley Transportation Authority

____NO EXCEPTIONS TAKEN (NET)
____MAKE CORRECTIONS NOTED (MCN)
____AMEND AND RESUBMIT (A/R)

Any action shown above is subject to the terms of the contract and does not relieve the Contractor of any of its obligations under the contract, including design and detailing.

Contract No.: DB11002F

By: _____ Date: _____

Not For Construction

REV	DATE	BY	SUB	APP	DESCRIPTION
0	20130710				READINESS FOR CONSTRUCTION

DESIGNED BY S. DEBNATH
DRAWN BY P. BALOGO
CHECKED BY E. BALLADA
IN CHARGE R. BARLAAN
DATE 20130710

LICENSED ARCHITECT SOMESH DEBNATH No. C21523 STATE OF CALIFORNIA

Skanska Shimmick Herzog
1436 California Circle Milpitas, California 95035
A Joint Venture

Anil Verma Associates, Inc. 1970 Broadway, Suite 525 Oakland, CA 94612 Phone: (510) 835-2539 Fax: (510) 536-2339
SUBMITTED

Lockwood, Andrews & Newnam, Inc. A LEO A DALY COMPANY | T·Y·LIN INTERNATIONAL
APPROVED

VTA BART SILICON VALLEY
BART SILICON VALLEY BERRYESSA EXTENSION

LINE, TRACK, STATIONS AND SYSTEMS DESIGN UNIT 023
MILPITAS STATION
POC DETAILS

CADD FILENAME C700-S-DB-A592.dwg
SIZE D | SCALE 1 1/2"=1'-0"
CONTRACT NO. C700 | REV. 0
AREA CODE DB | SHEET NO. A592 | PAGE NO. 0480

JosephG Jun 26, 2013 - 2:57pm G:\Current Projects\VTA-Berryessa Extension Project\Station - Milpitas\CAD\Drawings Out\13-0710 C700 Milpitas Station - RFC Submittc700-S-DB-A592.dwg

Santa Clara Valley Transportation Authority

____NO EXCEPTIONS TAKEN (NET)
____MAKE CORRECTIONS NOTED (MCN)
____AMEND AND RESUBMIT (A/R)

Any action shown above is subject to the terms of the contract and does not relieve the Contractor of any of its obligations under the contract, including design and detailing.

Contract No.: DB11002F

By: _____ Date: _____

Not For Construction

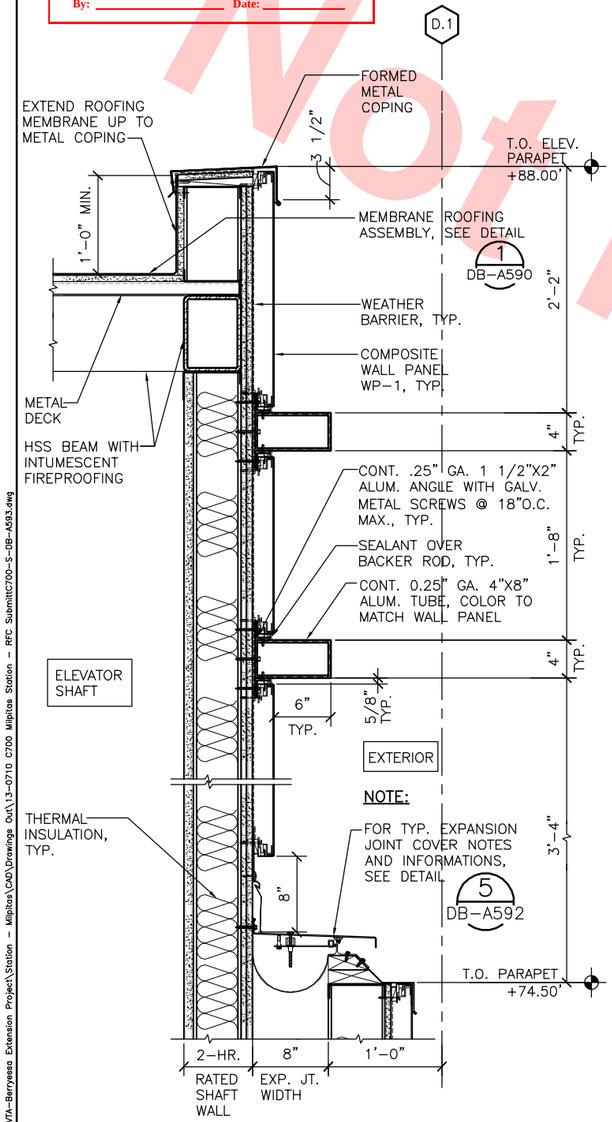

HORIZ. ALUM. TUBE @ ELEV. PARAPET 9 DB-A593 DB-A578
SCALE: 1 1/2"=1'-0"

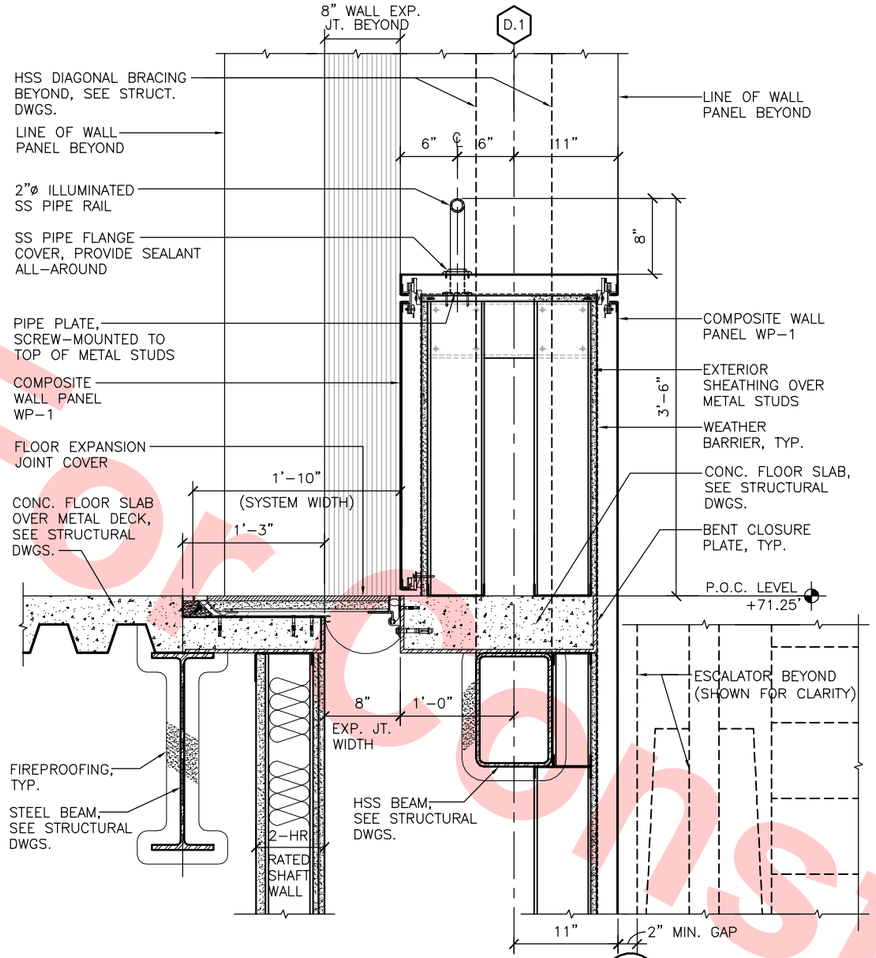

FLOOR EXPANSION JT COVER @ RAIL 6 DB-A593 DB-A574
SCALE: 1 1/2"=1'-0"

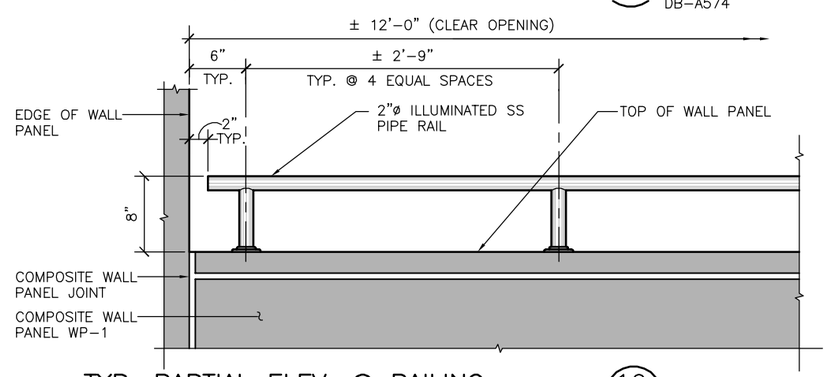

TYP. PARTIAL ELEV. @ RAILING 10 DB-A593 DB-A576
SCALE: 1 1/2"=1'-0"

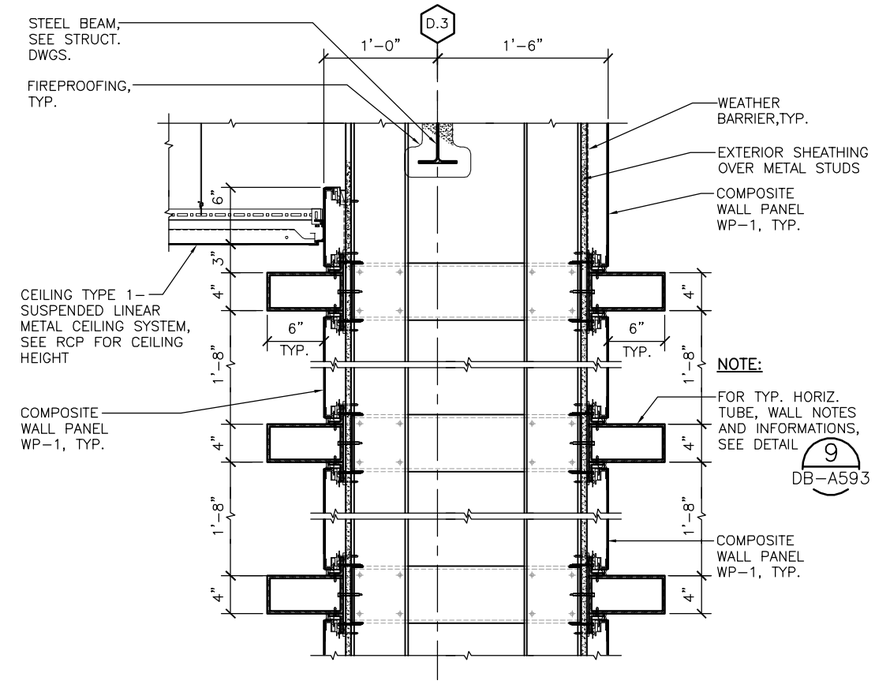

HORIZ. ALUM. TUBE @ POC LANDING 8 DB-A593 DB-A581
SCALE: 1 1/2"=1'-0"

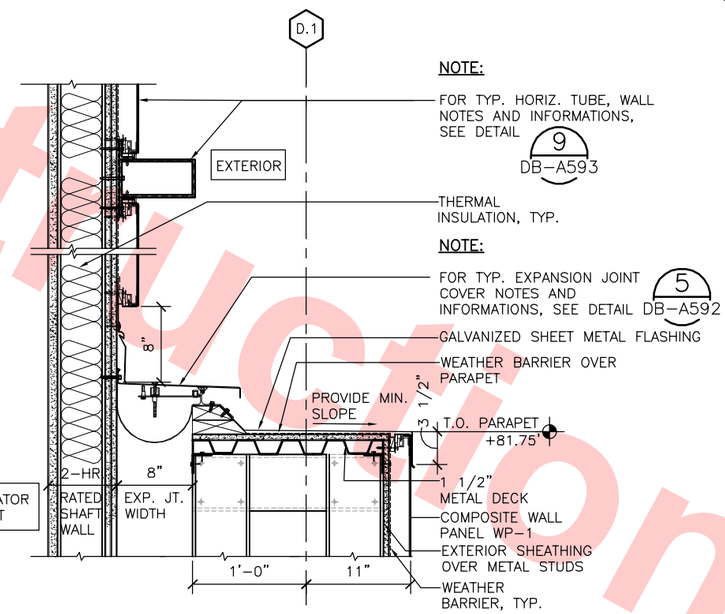

HORIZ. ALUM. TUBE @ ELEV. PARAPET 11 DB-A593 DB-A575
SCALE: 1 1/2"=1'-0"

REV	DATE	BY	SUB	APP	DESCRIPTION
0	20130710				READINESS FOR CONSTRUCTION

DESIGNED BY S. DEBNATH
DRAWN BY P. BALOGO
CHECKED BY E. BALLADA
IN CHARGE R. BARLAAN
DATE 20130710

LICENSED ARCHITECT SOMESH DEBNATH No. C21523 STATE OF CALIFORNIA

Skanska Shimmick Herzog
1436 California Circle Milpitas, California 95035
A Joint Venture

Anil Verma Associates, Inc.
1970 Broadway, Suite 525 Oakland, CA 94612
Phone: (510) 835-2537 Fax: (510) 835-2339
SUBMITTED

Lockwood, Andrews & Newnam, Inc. A LEO A DALY COMPANY
T·Y·LIN INTERNATIONAL
APPROVED

VTA BART SILICON VALLEY
BART SILICON VALLEY BERRYESSA EXTENSION

LINE, TRACK, STATIONS AND SYSTEMS DESIGN UNIT 023
MILPITAS STATION
POC DETAILS

CADD FILENAME C700-S-DB-A593.dwg
SIZE D | SCALE 1 1/2"=1'-0"
CONTRACT NO. C700 | REV. 0
AREA CODE DB | SHEET NO. A593 | PAGE NO. 0481

JosephC Jun 26, 2013 - 2:58pm G:\Current Projects\VTA-Berryessa Extension Project\Station - Milpitas\CAD\Drawings Out\13-0710 C700 Milpitas Station - RFC Submittal\C700-S-DB-A593.dwg

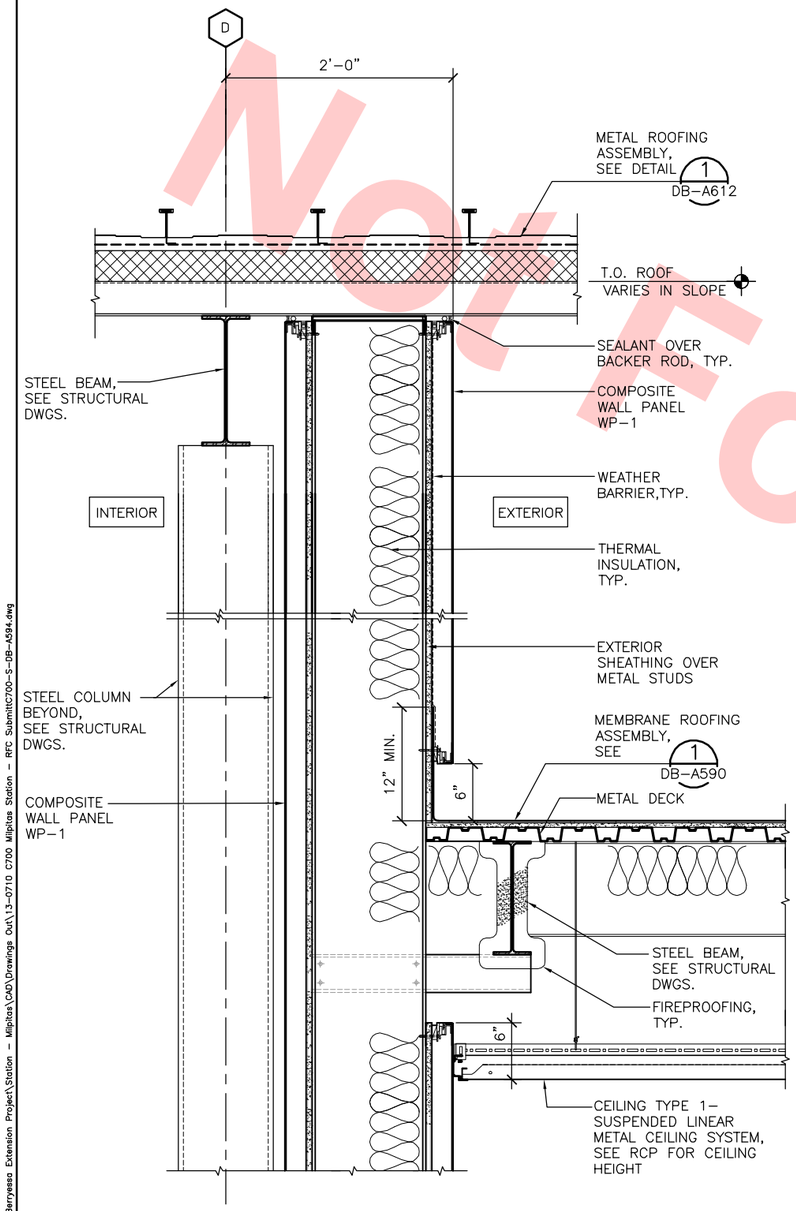

UPPER AND LOWER ROOF DETAIL

SCALE: 1 1/2"=1'-0"

9 DB-A594 DB-A575

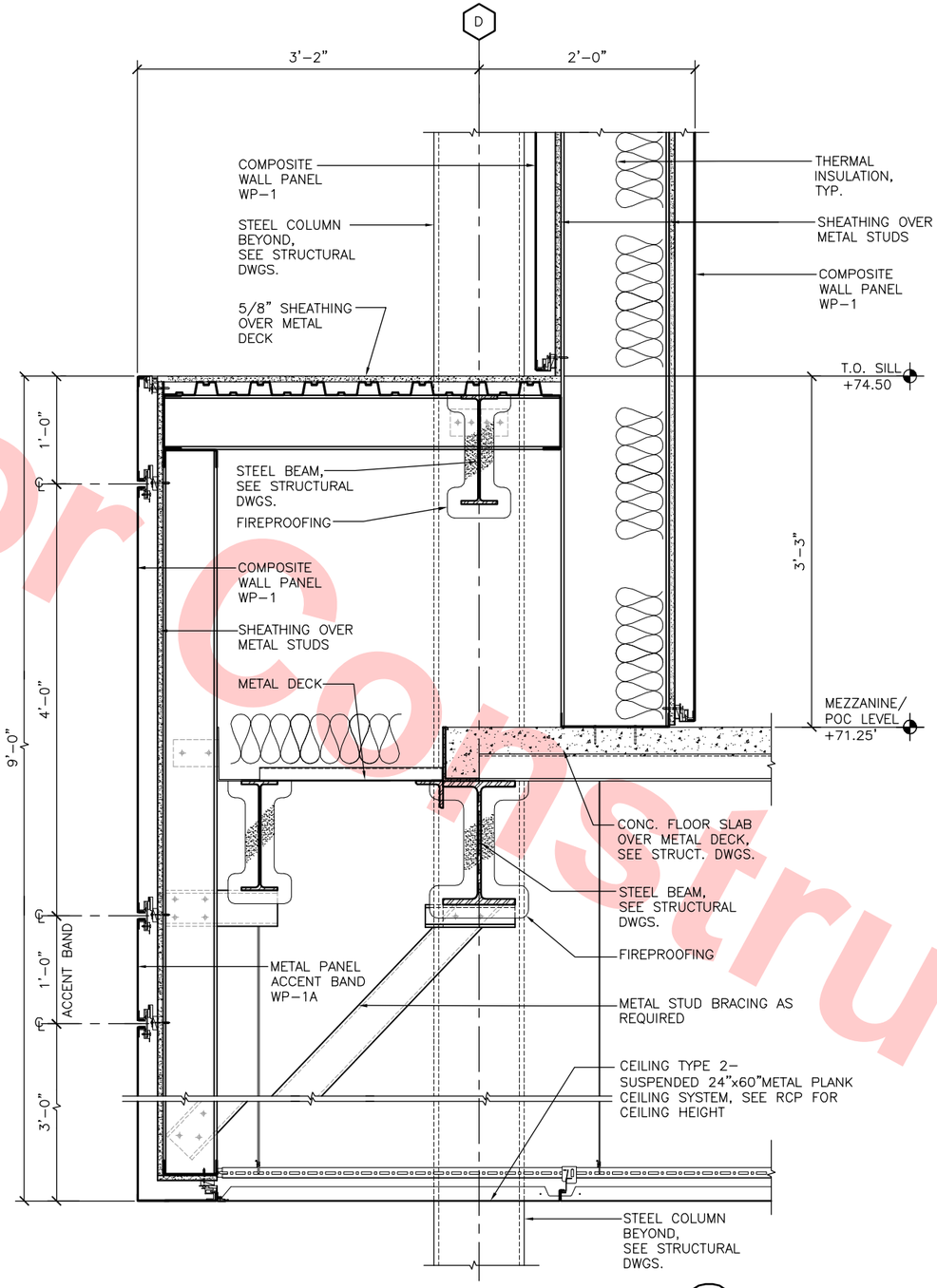

PARTIAL RAISED DECK @ POC LEVEL

SCALE: 1 1/2"=1'-0"

11 DB-A594 DB-A575

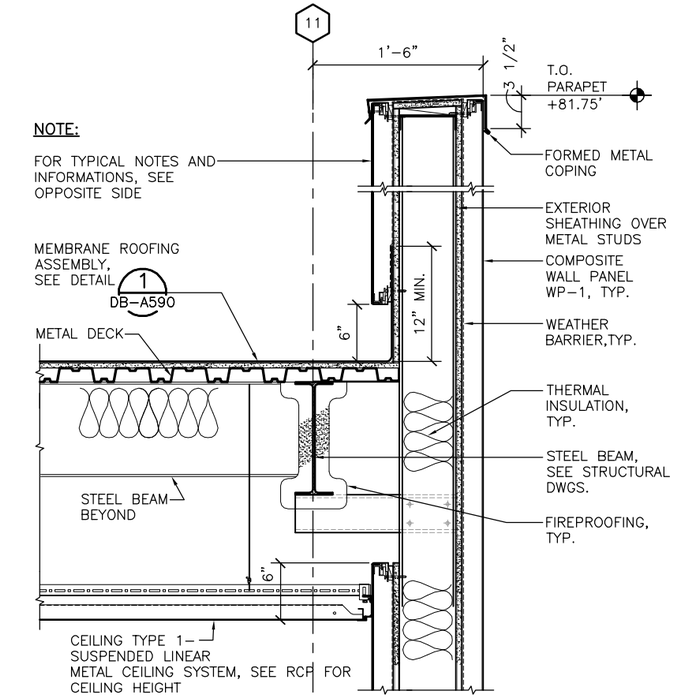

NOTE:

FOR TYPICAL NOTES AND INFORMATIONS, SEE OPPOSITE SIDE

MEMBRANE ROOFING ASSEMBLY, SEE DETAIL 1 DB-A590

METAL DECK

PARAPET DETAIL

SCALE: 1 1/2"=1'-0"

8 DB-A594 DB-A575

Santa Clara Valley Transportation Authority

____NO EXCEPTIONS TAKEN (NET)
____MAKE CORRECTIONS NOTED (MCN)
____AMEND AND RESUBMIT (A/R)

Any action shown above is subject to the terms of the contract and does not relieve the Contractor of any of its obligations under the contract, including design and detailing.

Contract No.: DB11002F

By: _____ **Date:** _____

Not For Construction

REV	DATE	BY	SUB	APP	DESCRIPTION
0	20130710				READINESS FOR CONSTRUCTION

DESIGNED BY S. DEBNATH
DRAWN BY P. BALOGO
CHECKED BY E. BALLADA
IN CHARGE R. BARLAAN
DATE 20130710

LICENSED ARCHITECT JAMESH DEBNATH No. C21523 STATE OF CALIFORNIA

Skanska Shimmick Herzog
1436 California Circle
Milpitas, California 95035
A Joint Venture

Anil Verma Associates, Inc.
1970 Broadway, Suite 325 Oakland, CA 94612
Phone: (510) 835-2537 Fax: (510) 535-2339
SUBMITTED

Lockwood, Andrews & Newnam, Inc. A LAN & BALY COMPANY
T·Y·LIN INTERNATIONAL
APPROVED

VTA BART SILICON VALLEY
BART SILICON VALLEY BERRYESSA EXTENSION

LINE, TRACK, STATIONS AND SYSTEMS
MILPITAS STATION

POC DETAILS

CADD FILENAME C700-S-DB-A594.dwg
SIZE D | SCALE 1 1/2"=1'-0"
CONTRACT NO. C700 | REV. 0
AREA CODE DB | SHEET NO. A594 | PAGE NO. 0482

JosephG Jun 26, 2013 - 2:59pm G:\Current Projects\VTA-Berryessa Extension Project\Station - Milpitas\CAD\Drawings Out\13-0710 C700 Milpitas Station - RFC Submit\C700-S-DB-A594.dwg

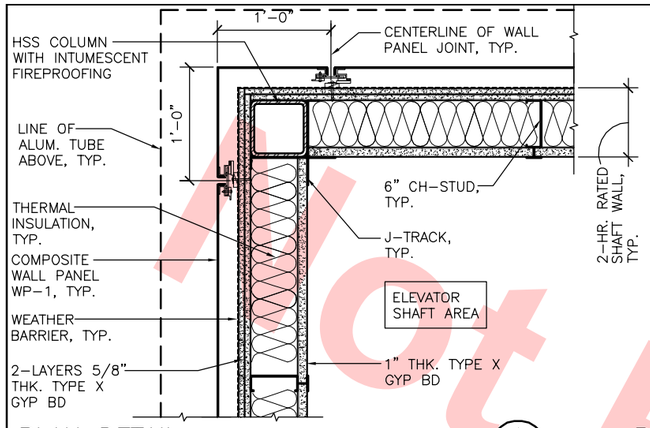

PLAN DETAIL 1 DB-A595 DB-A574
SCALE: 1 1/2"=1'-0"

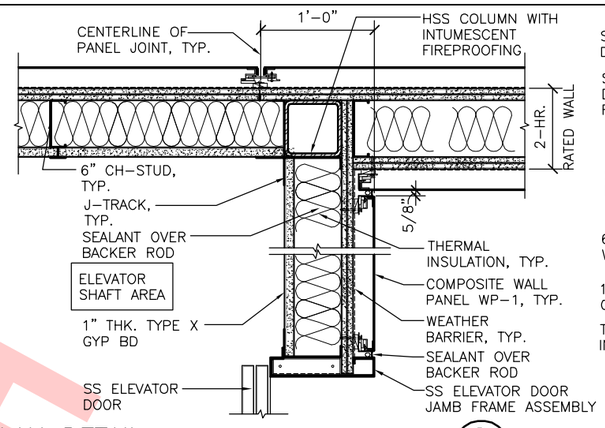

PLAN DETAIL 2 DB-A595 DB-A574
SCALE: 1 1/2"=1'-0"

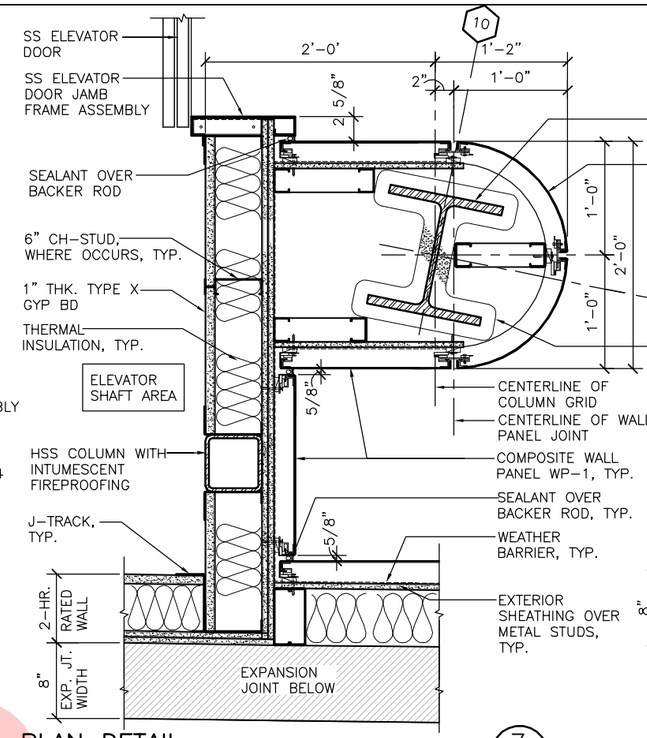

PLAN DETAIL 7 DB-A595 DB-A574
SCALE: 1 1/2"=1'-0"

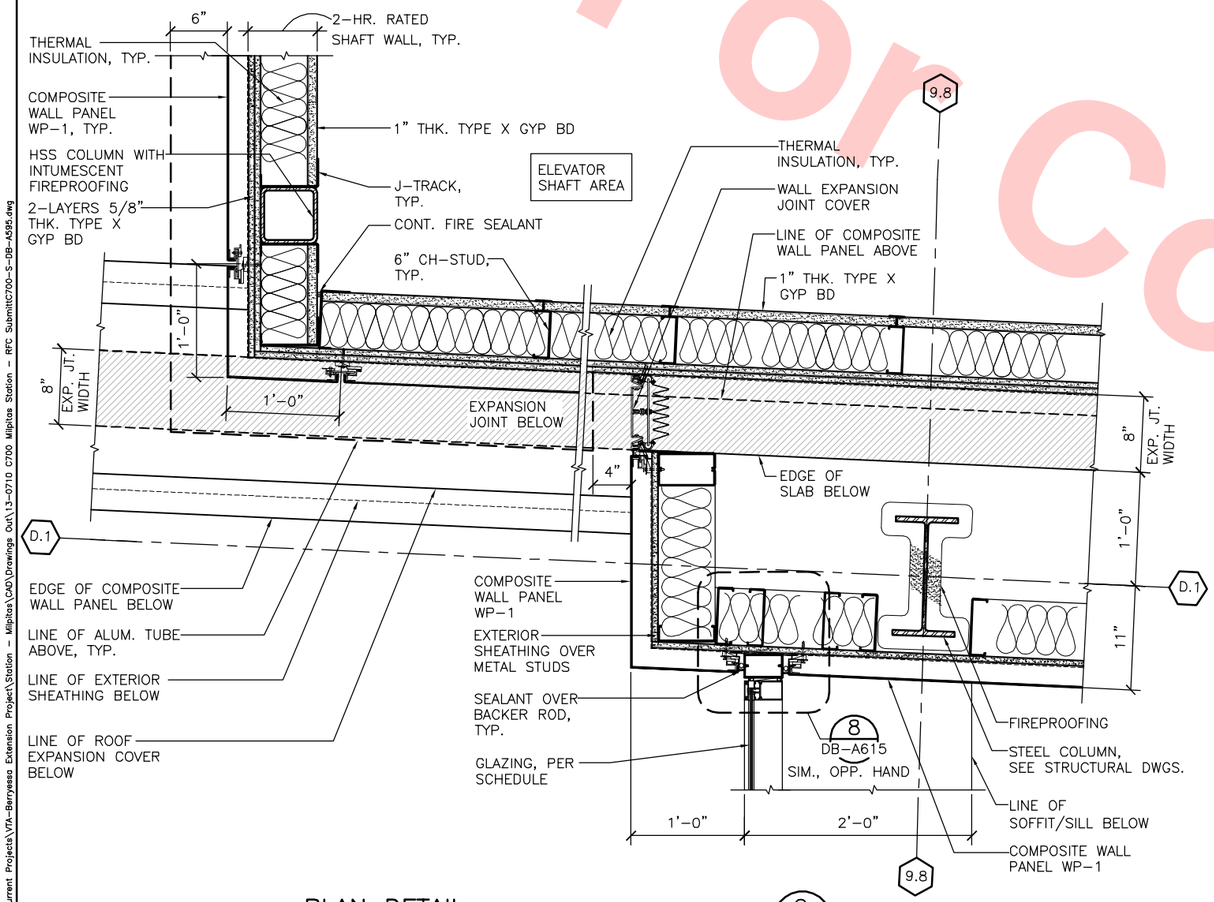

PLAN DETAIL 9 DB-A595 DB-A574
SCALE: 1 1/2"=1'-0"

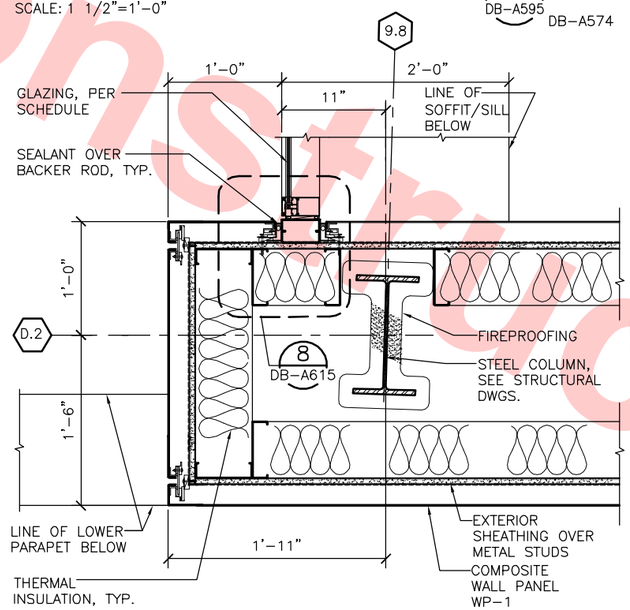

PLAN DETAIL 11 DB-A595 DB-A574
SCALE: 1 1/2"=1'-0"

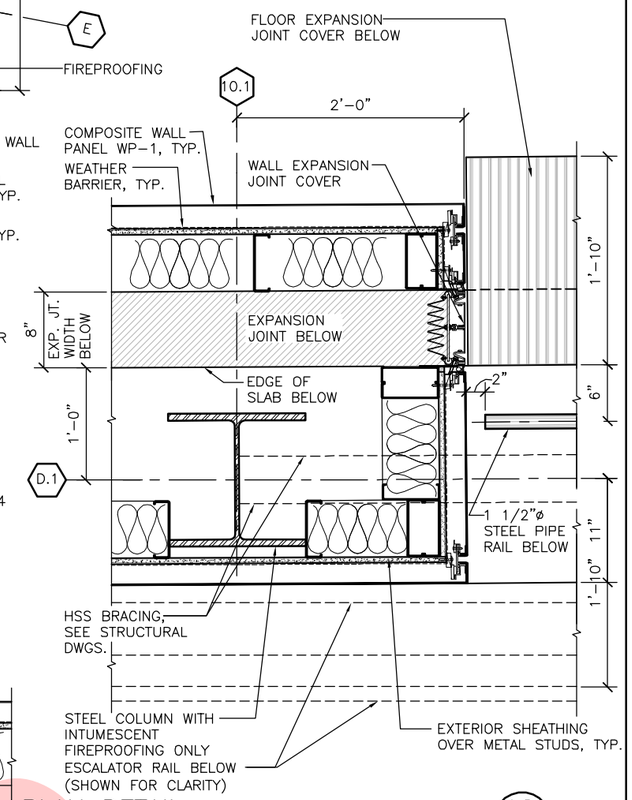

PLAN DETAIL 12 DB-A595 DB-A574
SCALE: 1 1/2"=1'-0"

Santa Clara Valley Transportation Authority

____NO EXCEPTIONS TAKEN (NET)
____MAKE CORRECTIONS NOTED (MCN)
____AMEND AND RESUBMIT (A/R)

Any action shown above is subject to the terms of the contract and does not relieve the Contractor of any of its obligations under the contract, including design and detailing.

Contract No.: DB11002F

By: _____ **Date:** _____

Not For Construction

REV	DATE	BY	SUB	APP	DESCRIPTION
0	20130710				READINESS FOR CONSTRUCTION

DESIGNED BY S. DEBNATH
DRAWN BY P. BALOGO
CHECKED BY E. BALLADA
IN CHARGE R. BARLAAN
DATE 20130710

LICENSED ARCHITECT SOMESH DEBNATH No. C21523 STATE OF CALIFORNIA

Skanska Shimmick Herzog
1436 California Circle Milpitas, California 95035
A Joint Venture

Anil Verma Associates, Inc. 1970 Broadway, Suite 525 Oakland, CA 94612 Phone: (510) 835-2537 Fax: (510) 835-2339
SUBMITTED

Lockwood, Andrews & Newnam, Inc. A LEO A DALY COMPANY
T·Y·LIN INTERNATIONAL
APPROVED

VTA BART SILICON VALLEY
BART SILICON VALLEY BERRYESSA EXTENSION

LINE, TRACK, STATIONS AND SYSTEMS DESIGN UNIT 023
MILPITAS STATION
POC PLAN DETAILS

CADD FILENAME C700-S-DB-A595.dwg
SIZE D | SCALE 1 1/2"=1'-0"
CONTRACT NO. C700 | REV. 0
AREA CODE DB | SHEET NO. A595 | PAGE NO. 0483

JosephC Jun 26, 2013 - 3:00pm G:\Current Projects\VTA-Berryessa Extension Project\Station - Milpitas\CAD\Drawings Out\13-0710 C700 Milpitas Station - RFC Submit\C700-S-DB-A595.dwg

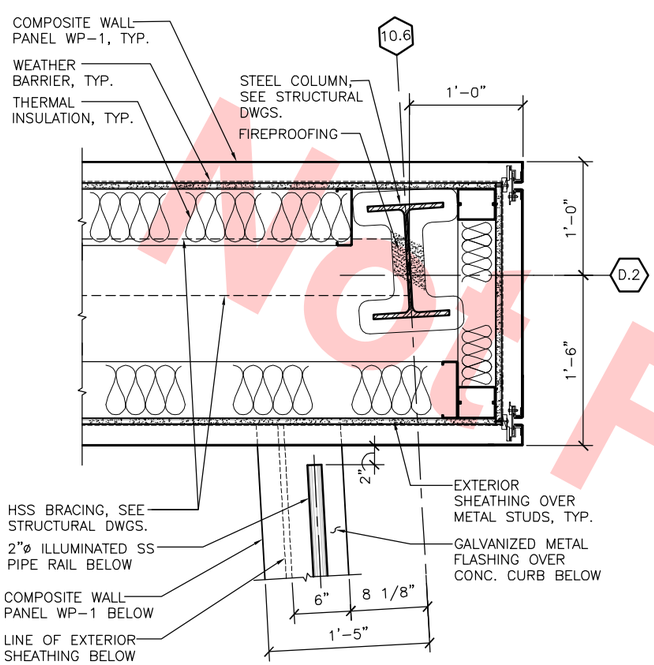

PLAN DETAIL 5 DB-A596 DB-A574
SCALE: 1 1/2"=1'-0"

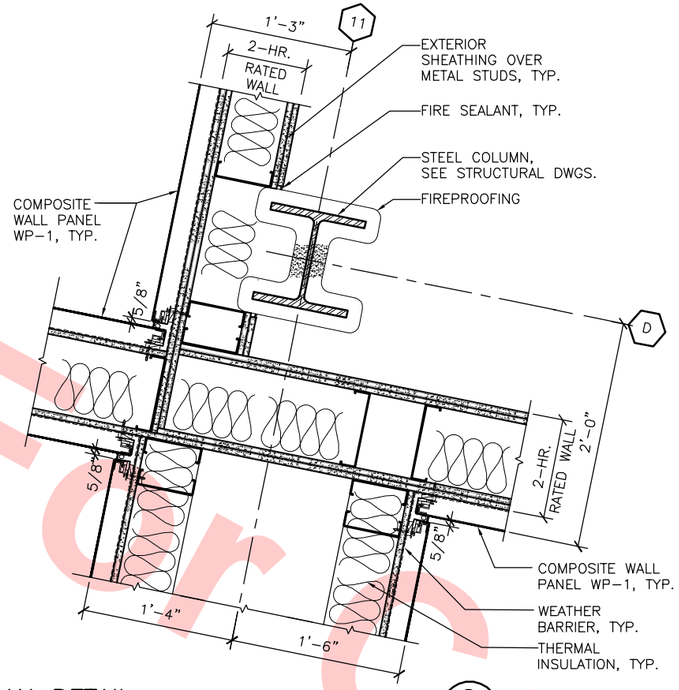

PLAN DETAIL 6 DB-A596 DB-A574
SCALE: 1 1/2"=1'-0"

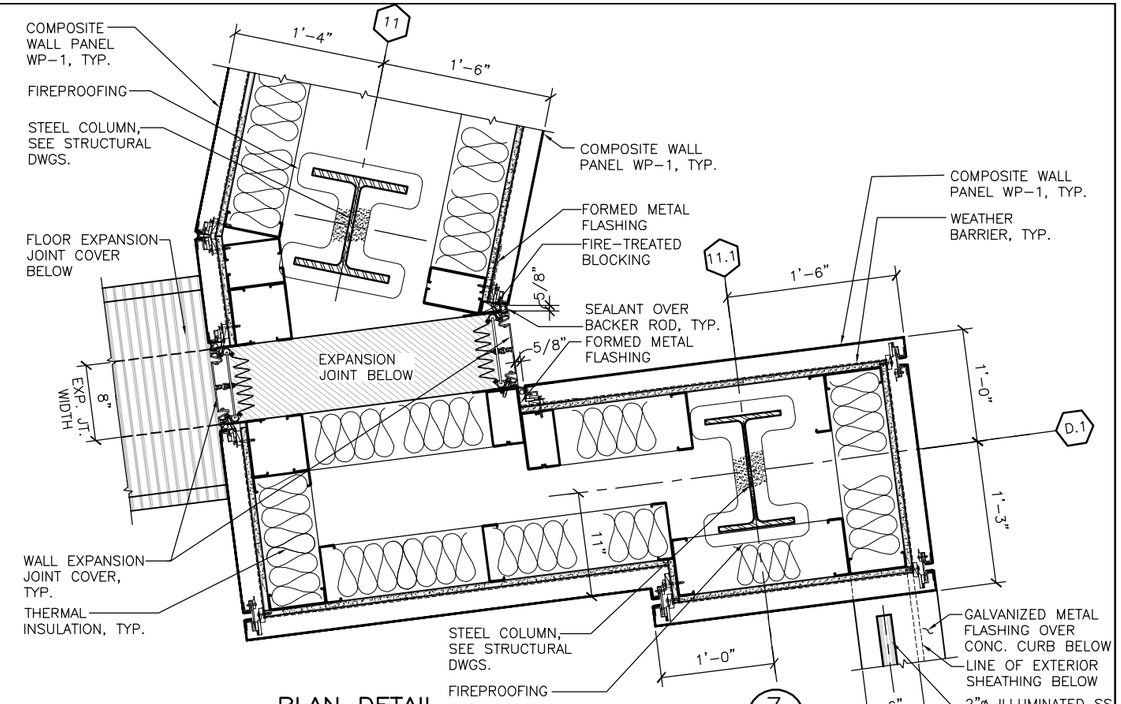

PLAN DETAIL 7 DB-A596 DB-A574
SCALE: 1 1/2"=1'-0"

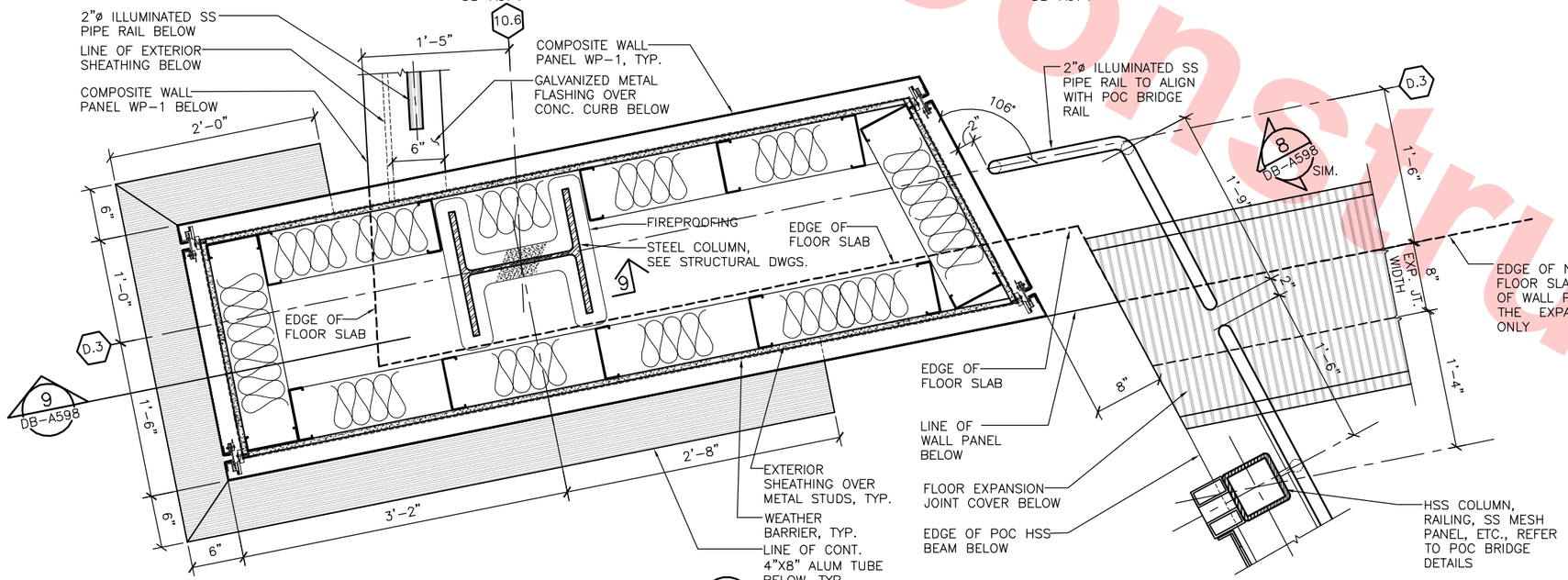

PLAN DETAIL 9 DB-A596 DB-A574
SCALE: 1 1/2"=1'-0"

Santa Clara Valley Transportation Authority

____NO EXCEPTIONS TAKEN (NET)
____MAKE CORRECTIONS NOTED (MCN)
____AMEND AND RESUBMIT (A/R)

Any action shown above is subject to the terms of the contract and does not relieve the Contractor of any of its obligations under the contract, including design and detailing.

Contract No.: DB11002F

By: _____ **Date:** _____

Not For Construction

REV	DATE	BY	SUB	APP	DESCRIPTION
0	20130710				READINESS FOR CONSTRUCTION

DESIGNED BY S. DEBNATH
DRAWN BY P. BALOGO
CHECKED BY E. BALLADA
IN CHARGE R. BARLAAN
DATE 20130710

LICENSED ARCHITECT DINESH DEBNATH No. C21523 STATE OF CALIFORNIA

Skanska Shimmick Herzog
1436 California Circle
Milpitas, California 95035
A Joint Venture

Anil Verma Associates, Inc.
1970 Broadway, Suite 525 Oakland, CA 94612
Phone: (510) 835-2539 Fax: (510) 835-2339

Lockwood, Andrews & Newnam, Inc. A LEO A DALY COMPANY
T·Y·LIN INTERNATIONAL

SUBMITTED _____ APPROVED _____

VTA BART SILICON VALLEY
BART SILICON VALLEY BERRYESSA EXTENSION

LINE, TRACK, STATIONS AND SYSTEMS
DESIGN UNIT 023
MILPITAS STATION
POC PLAN DETAILS

CADD FILENAME C700-S-DB-A596.dwg
SIZE D | SCALE 1 1/2"=1'-0"
CONTRACT NO. C700 | REV. 0
AREA CODE DB | SHEET NO. A596 | PAGE NO. 0484

JosephC Jun 26, 2013 - 3:01pm G:\Current Projects\VTA-Berryessa Extension Project\Station - Milpitas\CAD\Drawings Out\13-0710 C700 Milpitas Station - RFC Submit\C700-S-DB-A596.dwg

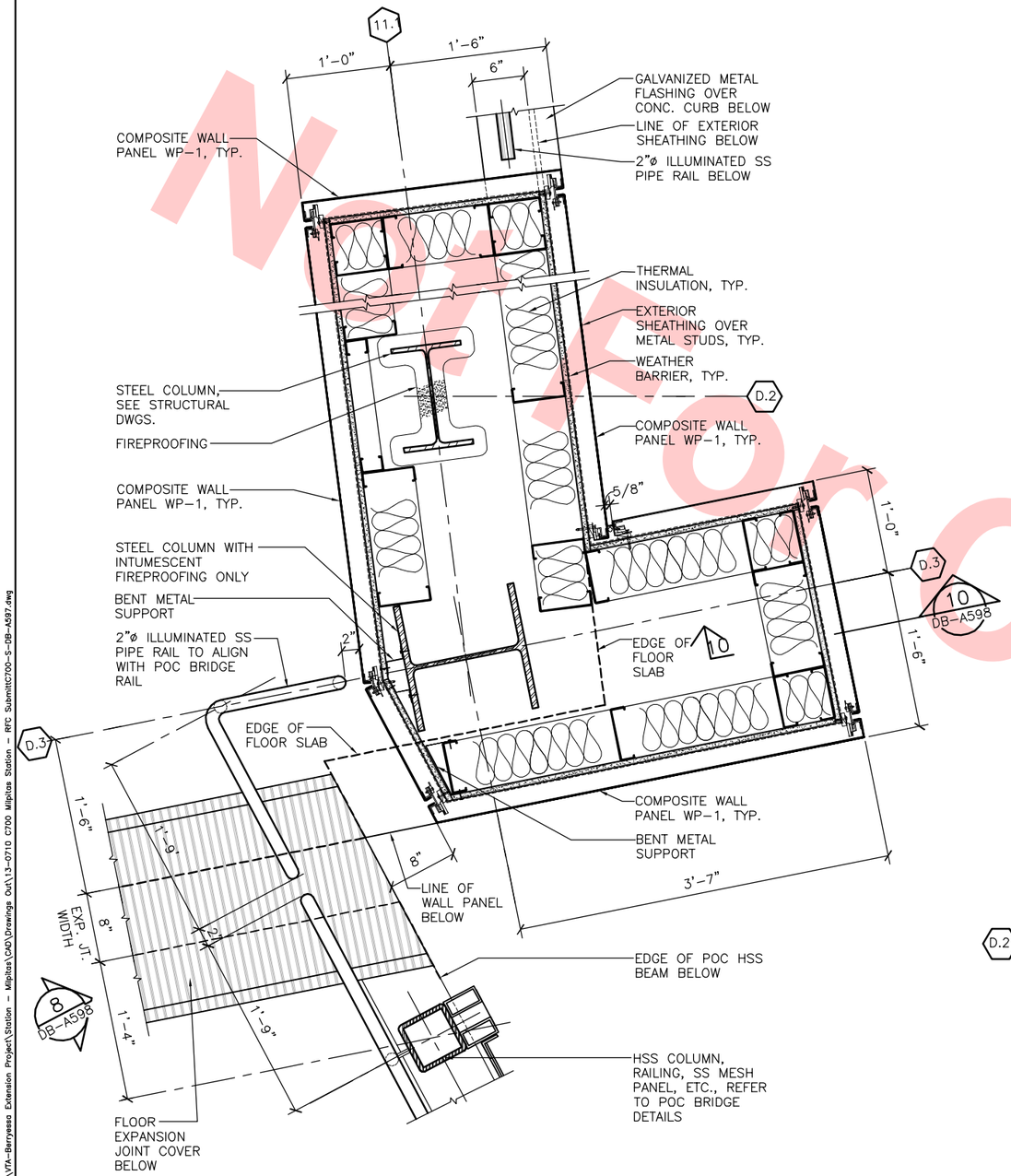

PLAN DETAIL 9 DB-A597 DB-A574
SCALE: 1 1/2"=1'-0"

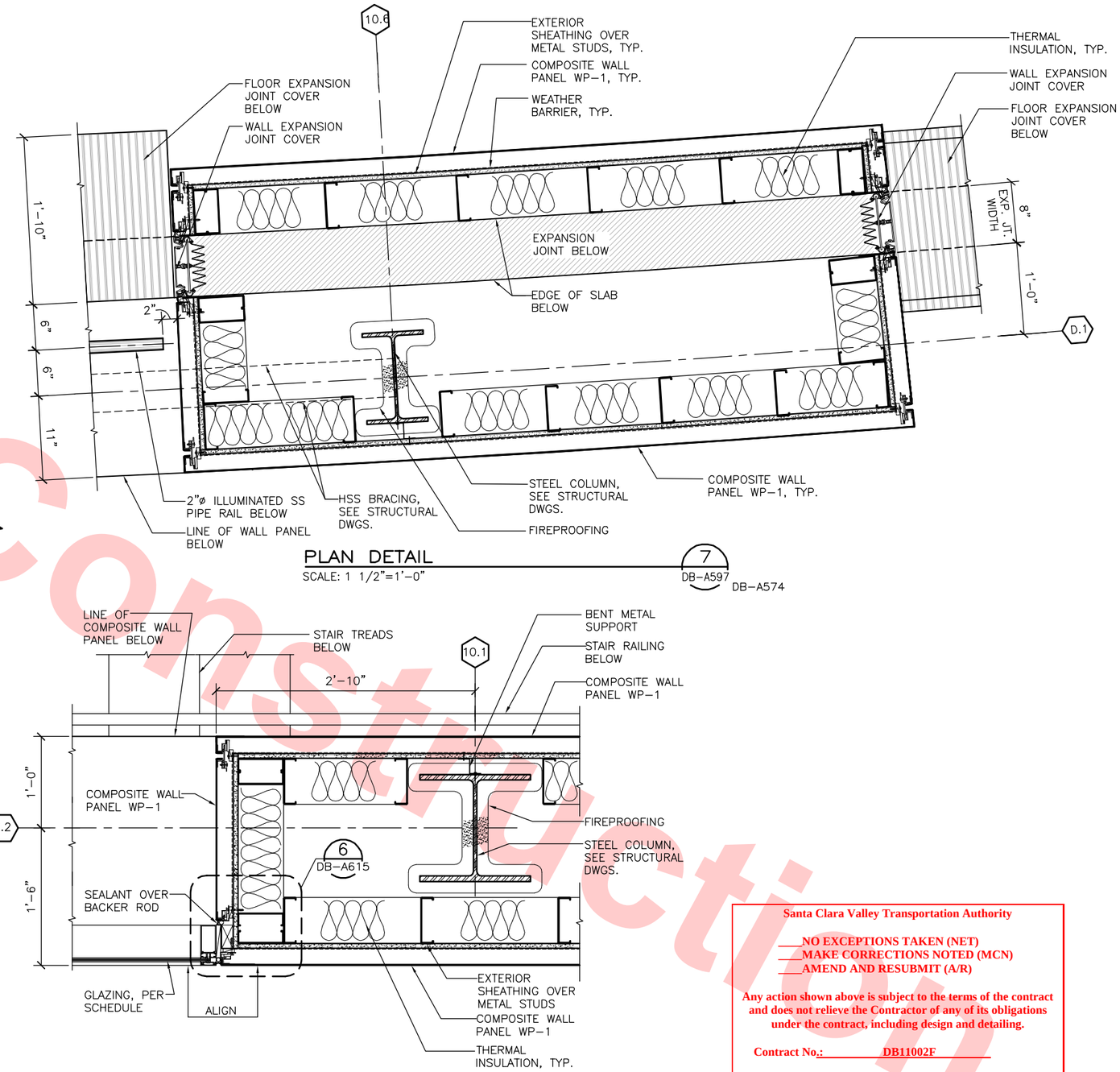

PLAN DETAIL 7 DB-A597 DB-A574
SCALE: 1 1/2"=1'-0"

PLAN DETAIL 11 DB-A597 DB-A574
SCALE: 1 1/2"=1'-0"

Not for Construction

Santa Clara Valley Transportation Authority

____NO EXCEPTIONS TAKEN (NET)
____MAKE CORRECTIONS NOTED (MCN)
____AMEND AND RESUBMIT (A/R)

Any action shown above is subject to the terms of the contract and does not relieve the Contractor of any of its obligations under the contract, including design and detailing.

Contract No.: DB11002F

By: _____ Date: _____

REV	DATE	BY	SUB	APP	DESCRIPTION
0	20130710				READINESS FOR CONSTRUCTION

DESIGNED BY S. DEBNATH
DRAWN BY P. BALOGO
CHECKED BY E. BALLADA
IN CHARGE R. BARLAAN
DATE 20130710

LICENSED ARCHITECT SOMESH DEBNATH No. C21523 STATE OF CALIFORNIA

Skanska Shimmick Herzog
1436 California Circle
Milpitas, California 95035
A Joint Venture

Anil Verma Associates, Inc.
1970 Broadway, Suite 525 Oakland, CA 94612
Phone: (510) 835-2537 Fax: (510) 835-2339
SUBMITTED

Lockwood, Andrews & Newnam, Inc. A LEO A DALY COMPANY
T·Y·LIN INTERNATIONAL
APPROVED

VTA BART SILICON VALLEY
BART SILICON VALLEY BERRYESSA EXTENSION

LINE, TRACK, STATIONS AND SYSTEMS
DESIGN UNIT 023
MILPITAS STATION
POC PLAN DETAILS

CADD FILENAME C700-S-DB-A597.dwg
SIZE D | SCALE 1 1/2"=1'-0"
CONTRACT NO. C700 | REV. 0
AREA CODE DB | SHEET NO. A597 | PAGE NO. 0485

JosephG Jun 26, 2013 - 3:02pm G:\Current Projects\VTA-Berryessa Extension Project\Station - Milpitas\CAD\Drawings Out\13-0710 C700 Milpitas Station - RFC Submittal\C700-S-DB-A597.dwg

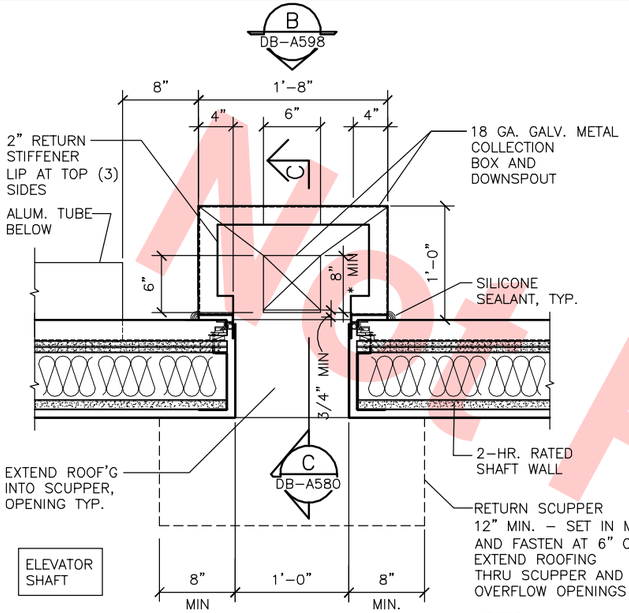

PLAN – A

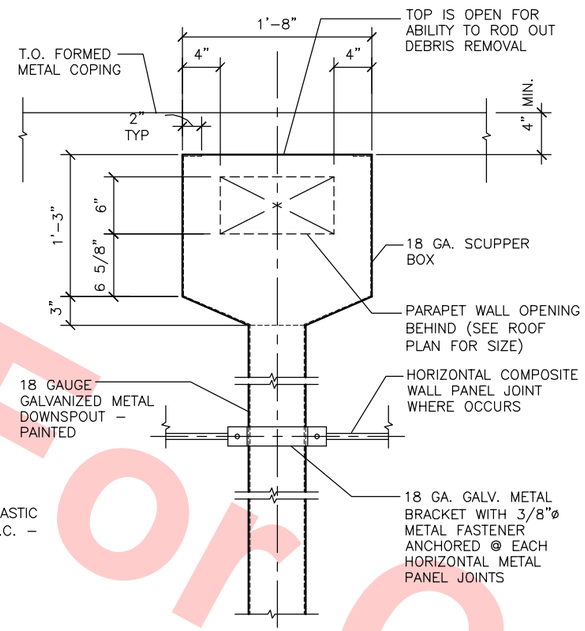

ELEVATION – B

NOTES:

1. PROVIDE ALL NECESSARY FLASHING AND COUNTERFLASHING FOR A WATERTIGHT AND WATERPROOF INSTALLATION.
2. PROVIDE SILICONE SEALANT–CONT. AT ALL ROOFING TERMINATIONS.

ROOF SCUPPER DETAILS

SCALE: 1 1/2"=1'–0"

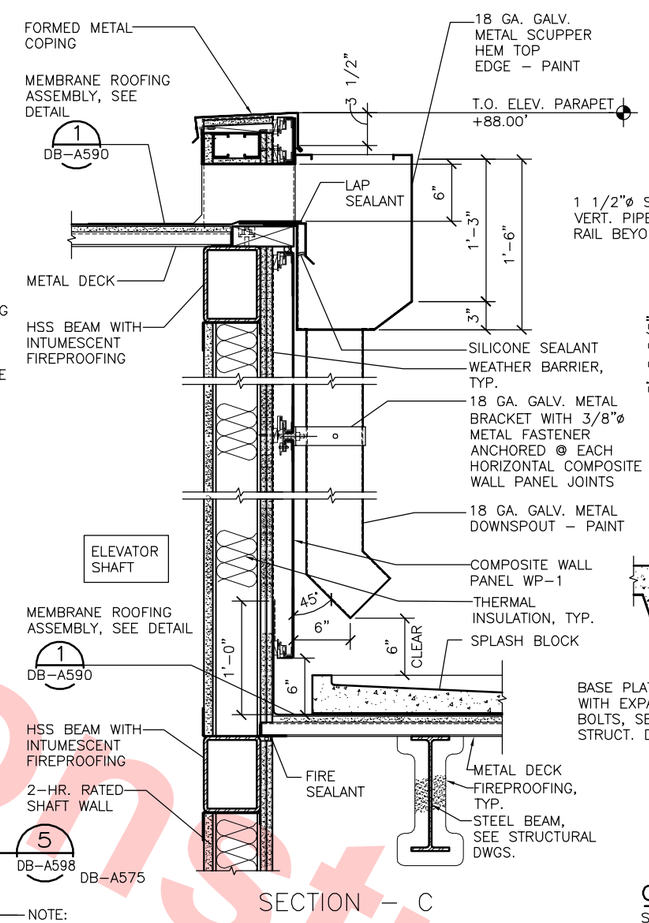

SECTION – C

5
DB–A598
DB–A575

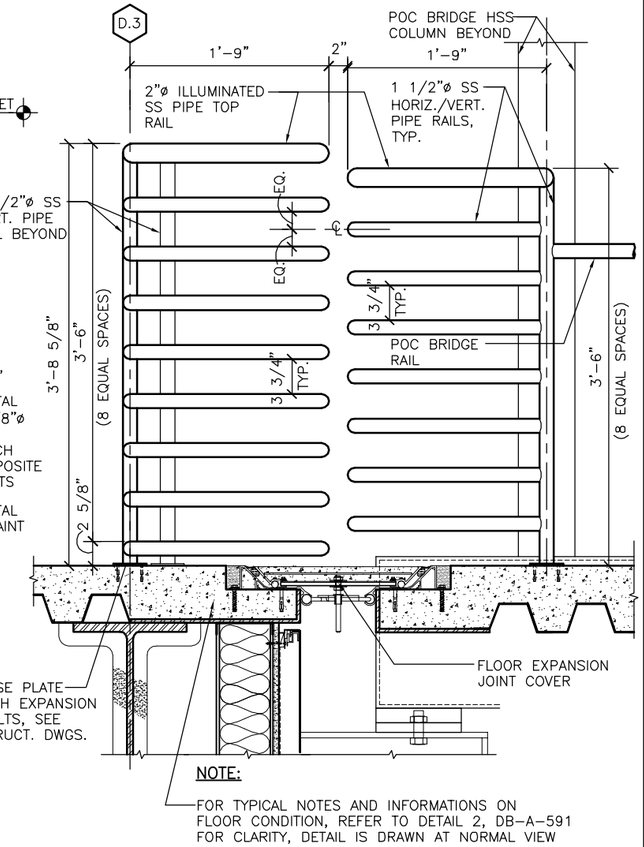

NOTE:

FOR TYPICAL NOTES AND INFORMATIONS ON FLOOR CONDITION, REFER TO DETAIL 2, DB–A–591 FOR CLARITY, DETAIL IS DRAWN AT NORMAL VIEW

GUARDRAIL @ EXP. JOINT DETAIL

SCALE: 1/12"=1'–0"

8
DB–A598
DB–A596
DB–A597

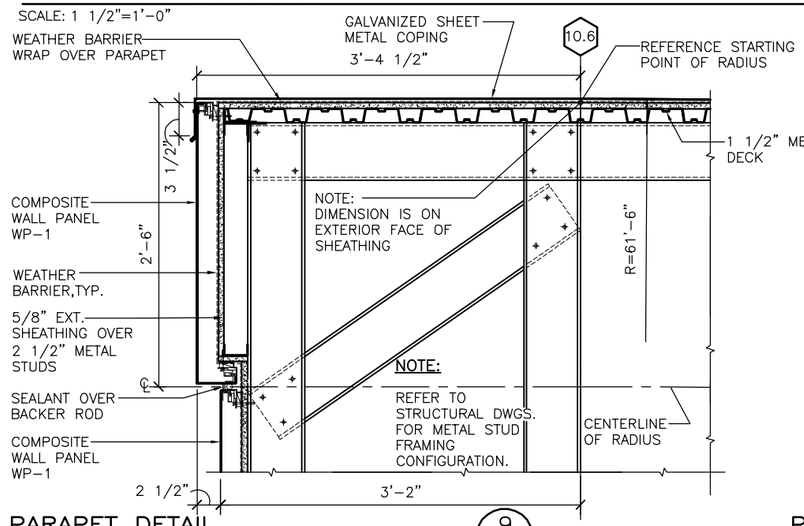

PARAPET DETAIL

SCALE: 1/12"=1'–0"

9
DB–A598
DB–A596

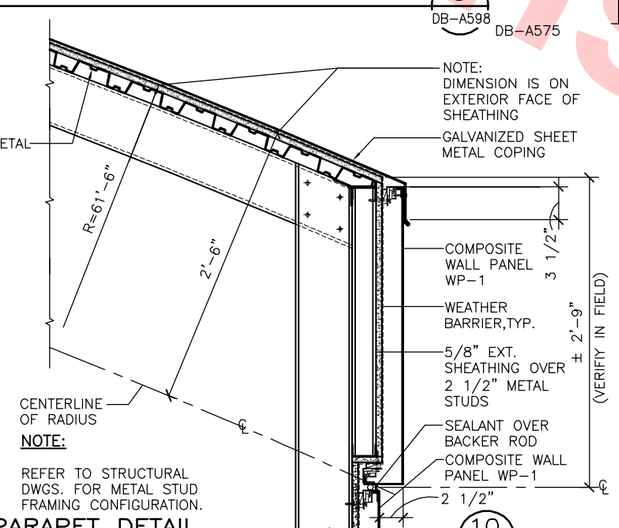

PARAPET DETAIL

SCALE: 1/12"=1'–0"

10
DB–A598
DB–A597

Santa Clara Valley Transportation Authority

____NO EXCEPTIONS TAKEN (NET)
____MAKE CORRECTIONS NOTED (MCN)
____AMEND AND RESUBMIT (A/R)

Any action shown above is subject to the terms of the contract and does not relieve the Contractor of any of its obligations under the contract, including design and detailing.

Contract No.: DB11002F

By: _____ **Date:** _____

Not For Construction

REV	DATE	BY	SUB	APP	DESCRIPTION
0	20130710				READINESS FOR CONSTRUCTION

DESIGNED BY S. DEBNATH
DRAWN BY P. BALOGO
CHECKED BY E. BALLADA
IN CHARGE R. BARLAAN
DATE 20130710

LICENSED ARCHITECT DINESH DEBNATH No. C21523 STATE OF CALIFORNIA

Skanska Shimmick Herzog
1436 California Circle Milpitas, California 95035
A Joint Venture

Anil Verma Associates, Inc.
1970 Broadway, Suite 325 Oakland, CA 94612
Phone: (510) 835-2537 Fax: (510) 835-2339

Lockwood, Andrews & Newnam, Inc. A LEO A DALY COMPANY
T·Y·LIN INTERNATIONAL

SUBMITTED _____ APPROVED _____

VTA BART SILICON VALLEY
BART SILICON VALLEY BERRYESSA EXTENSION

LINE, TRACK, STATIONS AND SYSTEMS
DESIGN UNIT 023
MILPITAS STATION
POC DETAILS

CADD FILENAME C700–S–DB–A598.dwg
SIZE D | SCALE 1 1/2"=1'–0"
CONTRACT NO. C700 | REV. 0
AREA CODE DB | SHEET NO. A598 | PAGE NO. 0486

JosephG Jun 26, 2013 – 3:03pm G:\Current Projects\VTA–Berryessa Extension Project\Station – Milpitas\CAD\Drawings Out\13–0710 C700 Milpitas Station – RFC Submit\C700–S–DB–A598.dwg

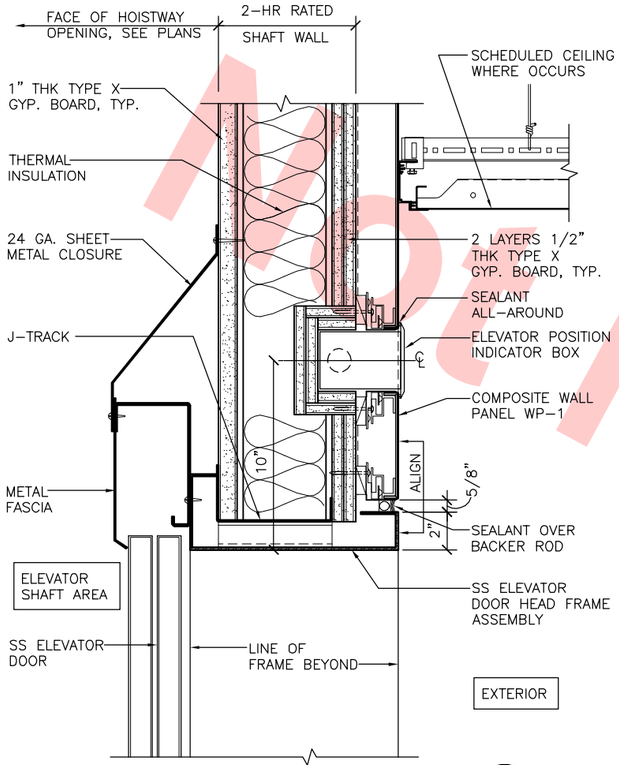

ELEVATOR HEAD (5) DB-A599
SCALE: 3"=1'-0"
DB-A551
DB-A578

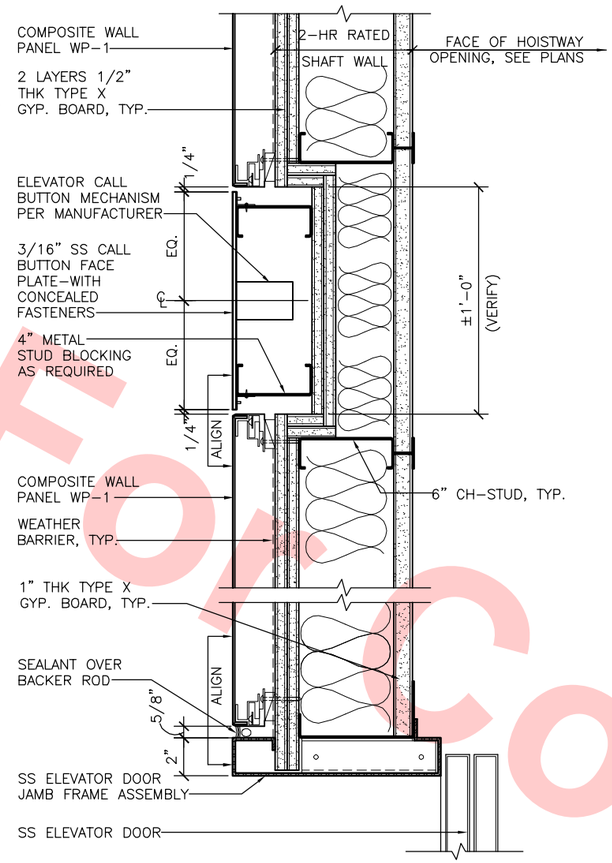

ELEVATOR JAMB / CALL BUTTON (6) DB-A599
SCALE: 3"=1'-0"
DB-A573

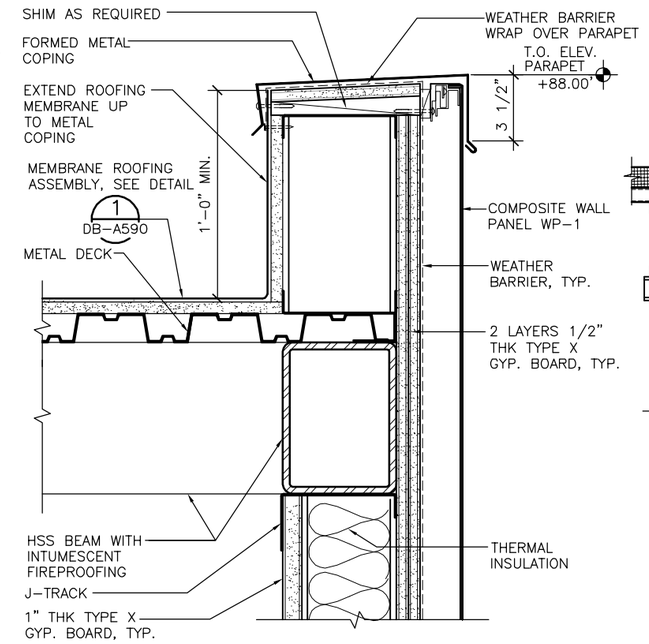

ELEVATOR ROOF PARAPET (3) DB-A599
SCALE: 3"=1'-0"
DB-A578

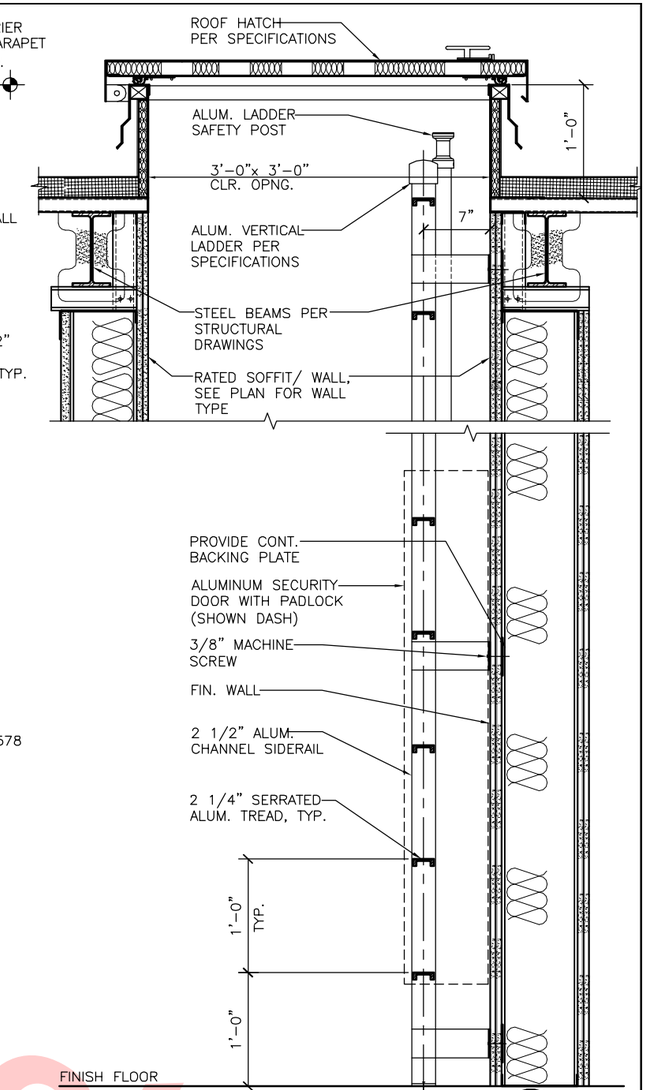

ROOF / WALL ACCESS HATCH (8) DB-A599
SCALE: 1 1/2"=1'-0"
DB-A211
DB-A141
DB-A142
DB-A143
DB-A144
DB-A145

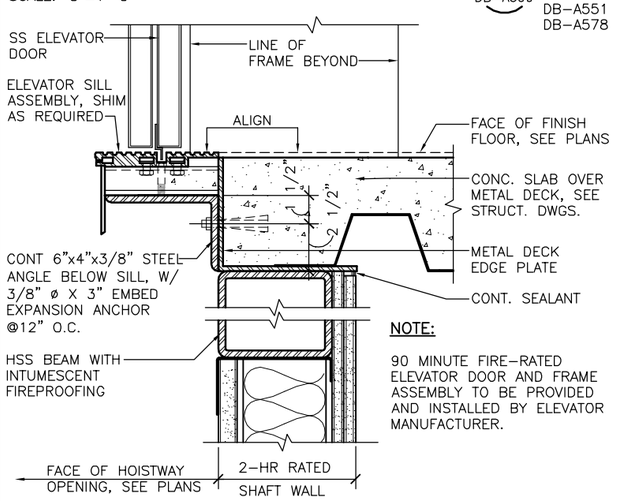

NOTE:

90 MINUTE FIRE-RATED ELEVATOR DOOR AND FRAME ASSEMBLY TO BE PROVIDED AND INSTALLED BY ELEVATOR MANUFACTURER.

ELEVATOR SILL @ POC LEVEL (9) DB-A599
SCALE: 3"=1'-0"
DB-A578

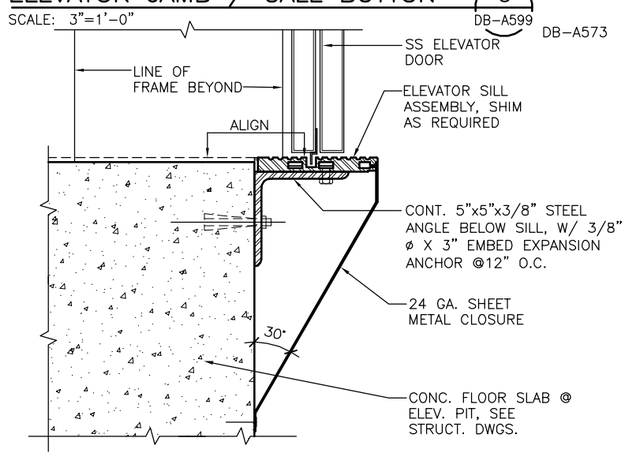

ELEV. SILL @ CONCOURSE LEVEL (10) DB-A599
SCALE: 3"=1'-0"
DB-A578

Santa Clara Valley Transportation Authority

____NO EXCEPTIONS TAKEN (NET)
____MAKE CORRECTIONS NOTED (MCN)
____AMEND AND RESUBMIT (A/R)

Any action shown above is subject to the terms of the contract and does not relieve the Contractor of any of its obligations under the contract, including design and detailing.

Contract No.: DB11002F

By: _____ Date: _____

Not For Construction

REV	DATE	BY	SUB	APP	DESCRIPTION
0	20130710				READINESS FOR CONSTRUCTION

DESIGNED BY S. DEBNATH
DRAWN BY P. BALOGO
CHECKED BY E. BALLADA
IN CHARGE R. BARLAAN
DATE 20130710

LICENSED ARCHITECT SOMESH DEBNATH No. C21523 STATE OF CALIFORNIA

Skanska Shimmick Herzog
1436 California Circle Milpitas, California 95035
A Joint Venture

Anil Verma Associates, Inc.
1970 Broadway, Suite 525 Oakland, CA 94612
Phone: (510) 835-2537 Fax: (510) 835-2339
SUBMITTED

Lockwood, Andrews & Newnam, Inc. A LEO A DALY COMPANY
T·Y·LIN INTERNATIONAL
APPROVED

VTA BART SILICON VALLEY
BART SILICON VALLEY BERRYESSA EXTENSION

LINE, TRACK, STATIONS AND SYSTEMS
DESIGN UNIT 023
MILPITAS STATION
POC ELEVATOR DETAILS

CADD FILENAME C700-S-DB-A599.dwg
SIZE D | SCALE AS NOTED
CONTRACT NO. C700 | REV. 0
AREA CODE DB | SHEET NO. A599 | PAGE NO. 0487

JosephC Jun 26, 2013 – 5:00pm G:\Current Projects\VTA-Berryessa Extension Project\Station – Milpitas\CAD\Drawings Out\13-0710 C700 Milpitas Station – RFC Submit\C700-S-DB-A599.dwg

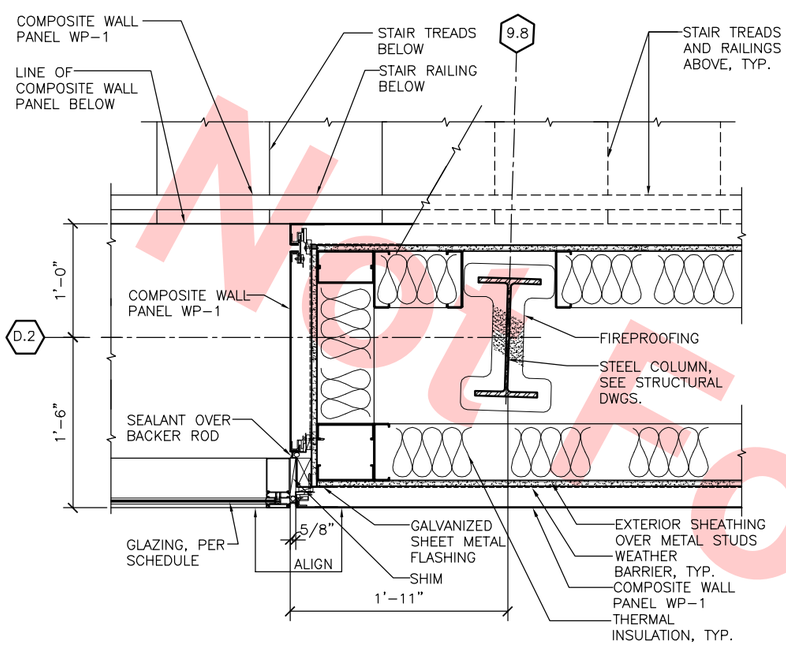

PLAN DETAIL (5 / DB-A600) — DB-A573
SCALE: 1 1/2"=1'-0"

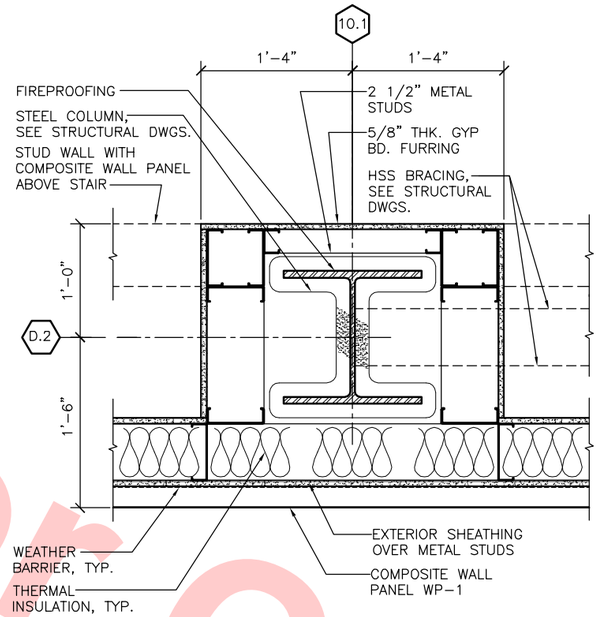

PLAN DETAIL (6 / DB-A600) — DB-A573
SCALE: 1 1/2"=1'-0"

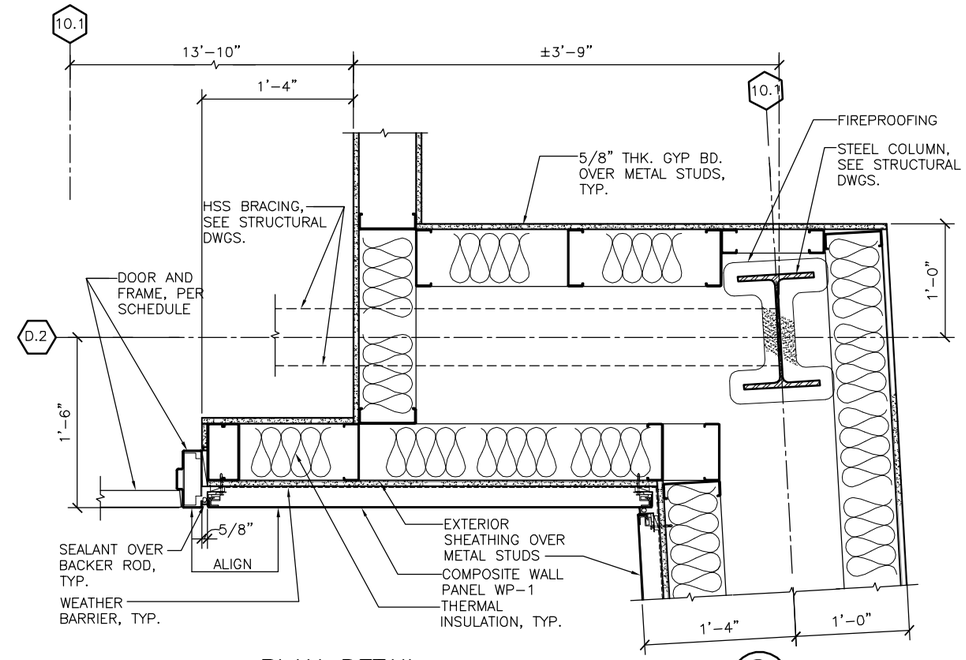

PLAN DETAIL (8 / DB-A600) — DB-A573
SCALE: 1 1/2"=1'-0"

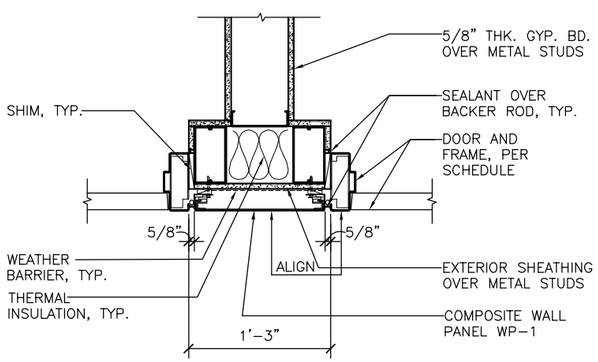

PLAN DETAIL (9 / DB-A600) — DB-A573
SCALE: 1 1/2"=1'-0"

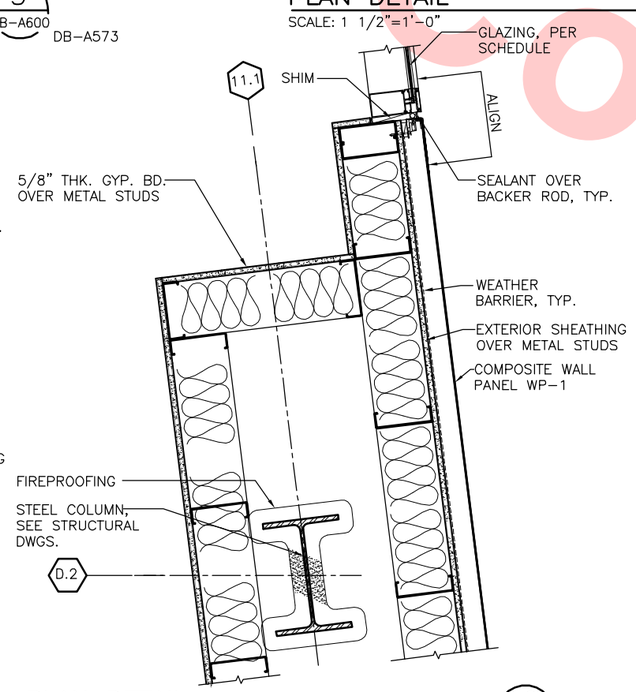

PLAN DETAIL (10 / DB-A600) — DB-A573
SCALE: 1 1/2"=1'-0"

Santa Clara Valley Transportation Authority

____NO EXCEPTIONS TAKEN (NET)
____MAKE CORRECTIONS NOTED (MCN)
____AMEND AND RESUBMIT (A/R)

Any action shown above is subject to the terms of the contract and does not relieve the Contractor of any of its obligations under the contract, including design and detailing.

Contract No.: DB11002F

By: _____ **Date:** _____

Not for Construction

REV	DATE	BY	SUB	APP	DESCRIPTION
0	20130710				READINESS FOR CONSTRUCTION

DESIGNED BY S. DEBNATH
DRAWN BY P. BALOGO
CHECKED BY E. BALLADA
IN CHARGE R. BARLAAN
DATE 20130710

LICENSED ARCHITECT — SOMESH DEBNATH — No. C21523 — STATE OF CALIFORNIA

Skanska Shimmick Herzog — 1436 California Circle, Milpitas, California 95035 — A Joint Venture

Anil Verma Associates, Inc. — 1970 Broadway, Suite 325, Oakland, CA 94612, Phone: (510) 835-2537, Fax: (510) 835-2339 — SUBMITTED

Lockwood, Andrews & Newnam, Inc. — A LEO A DALY COMPANY — T·Y·LIN INTERNATIONAL — APPROVED

VTA BART SILICON VALLEY — BART SILICON VALLEY BERRYESSA EXTENSION

LINE, TRACK, STATIONS AND SYSTEMS
MILPITAS STATION

POC PLAN DETAILS

CADD FILENAME C700-S-DB-A600.dwg
SIZE D | SCALE 1 1/2"=1'-0"
CONTRACT NO. C700 | REV. 0
AREA CODE DB | SHEET NO. A600 | PAGE NO. 0488

JosephG Jul 02, 2013 - 2:00pm G:\Current Projects\VTA-Berryessa Extension Project\Station - Milpitas\CAD\Drawings Out\13-0710 C700 Milpitas Station - RFC Submit\C700-S-DB-A600.dwg

INTERIOR PARTITION SCHEDULE

NOTE: PROVIDE 3/4" THICK FIRE RETARDANT TREATED PLYWOOD (5 PLY, CDX GRADE) PANELS AT ALL WALLS USED FOR MOUNTING EQUIPMENT. PANEL SHALL BE 4 BY 8 FEET MOUNTED HORIZONTALLY WITH THE BOTTOM OF PANELS AT THE HEIGHT OF 3 OR 4 FEET ABOVE THE FLOOR. PAINT TO MATCH WALLS.

WALL TYPE	DETAILS	DESCRIPTION	FIRE RATING	SOUND RATING
A1	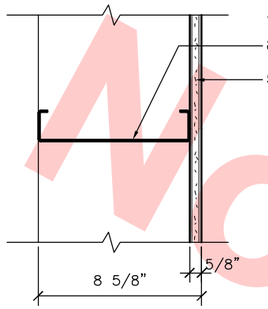	ROOM SIDE 8" METAL STUDS @ 16" OC 5/8" GYP BD	–	(STC)
A2	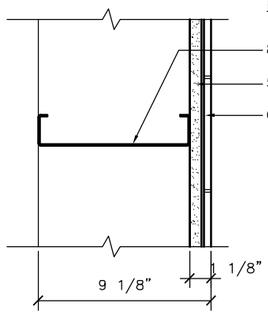	ROOM SIDE 8" METAL STUDS @ 16" OC 5/8" CEM BACKER BD CER TILE	–	
B1 B2 B2A	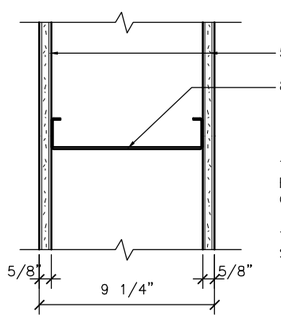	5/8" GYP BD 8" METAL STUDS @ 16" OC TYPE B2: SAME AS B1 EXCEPT 5/8" TYPE X GYP BD TYPE B2A: USE 6" METAL STUD	–	36–39
			1–HR UL DESIGN U465	39–41
B3	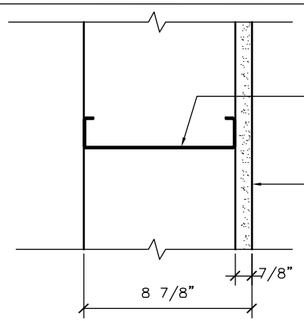	8" METAL STUDS @ 16" OC CEMENT PLASTER		
B4	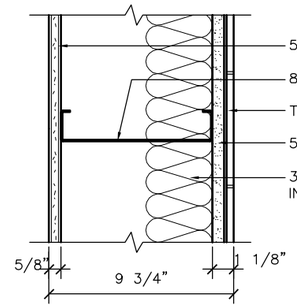	5/8" GYP BD 8" METAL STUDS @ 16" OC TILE 5/8" CEM BACKER BD 3 1/2" ACOUSTICAL BATT INSULATIOPN	–	(STC)
B5	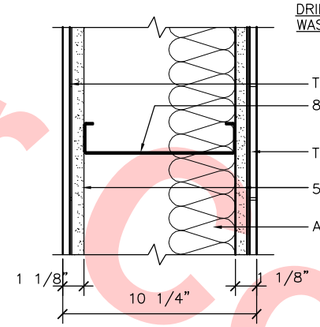	DRINKING FOUNTAIN SIDE/ EYE WASHER @ BATTERY ROOM TILE 8" METAL STUDS @ 16" OC TILE 5/8" CEM BACKER BD ACOUSTICAL BATT INSULATION	1–HR UL DESIGN U442	36–39
B6	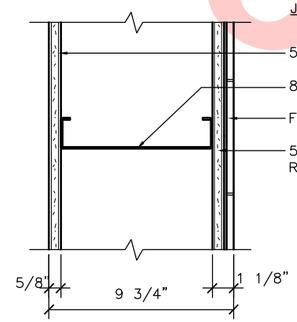	JANITOR SIDE 5/8" GYP BD 8" METAL STUDS @ 16" OC FRP PANEL 5/8" TYPE X WATER RESISTANT GYP BD	–	39–41
C1 C2 C2A	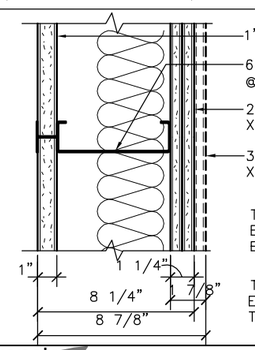	1" TYPE X GYP BD 6" C–H METAL STUDS @ 24" OC 2 LAYERS 5/8" TYPE X GYP BD 3 LAYERS 5/8" TYPE X GYP BD TYPE C2: SAME AS C1 EXCEPT WITH ACOUSTICAL BATT INSULATION TYPE C2A: SAME AS C2 EXCEPT WITH 3 LAYERS TYPE X GYP BD	2–HR UL DESIGN U428 3–HR UL DESIGN U415	48–49
C3	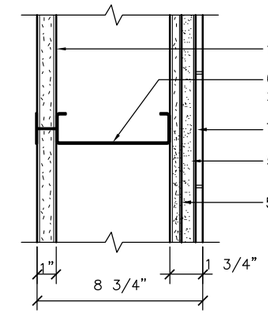	1" TYPE X GYP BD 6" C–H METAL STUDS @ 24" OC TILE 5/8" CEM BACKER BD 5/8" TYPE X GYP BD	2–HR UL DESIGN U459	(STC) 50–54
C4	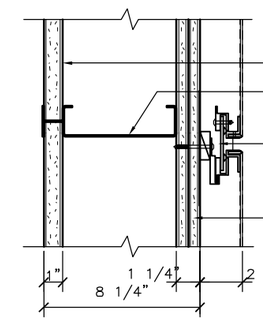	1" TYPE X GYP BD 6" C–H METAL STUDS @ 16" OC COMPOSITE WALL PANEL WP–1 2 LAYERS 5/8" TYPE X GYP BD	2–HR UL DESIGN U428	36–39
D1 D2	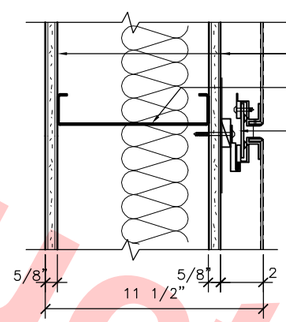	PUBLIC SIDE 5/8" GYP BD 8" METAL STUDS @ 16" OC COMPOSITE WALL PANEL WP–1 TYPE D2: SAME AS D1 EXCEPT WITH ACOUSTICAL BATT INSULATION	–	
D3	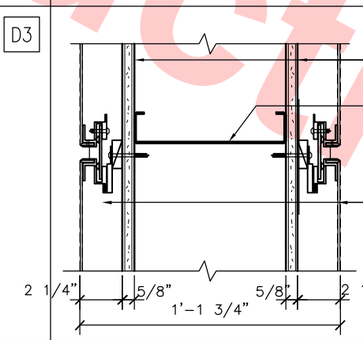	5/8" GYP BD EA SIDE 8" METAL STUDS @ 16" OC COMPOSITE WALL PANEL WP–1		

Santa Clara Valley Transportation Authority

____NO EXCEPTIONS TAKEN (NET)
____MAKE CORRECTIONS NOTED (MCN)
____AMEND AND RESUBMIT (A/R)

Any action shown above is subject to the terms of the contract and does not relieve the Contractor of any of its obligations under the contract, including design and detailing.

Contract No.: DB11002F

By: _____ Date: _____

Not For Construction

REV	DATE	BY	SUB	APP	DESCRIPTION
0	20130710				READINESS FOR CONSTRUCTION

DESIGNED BY S. DEBNATH
DRAWN BY R. COLLADO
CHECKED BY E. BALLADA
IN CHARGE R. BARLAAN
DATE 20130710

LICENSED ARCHITECT JAMESH DEBNATH No. C21523 STATE OF CALIFORNIA

Skanska Shimmick Herzog
1436 California Circle
Milpitas, California 95035
A Joint Venture

Anil Verma Associates, Inc.
1970 Broadway, Suite 525 Oakland, CA 94612
Phone: (510) 835-2537 Fax: (510) 835-2339

SUBMITTED

Lockwood, Andrews & Newnam, Inc. A LAN & BALY COMPANY
T·Y·LIN INTERNATIONAL

APPROVED

VTA BART SILICON VALLEY
BART SILICON VALLEY BERRYESSA EXTENSION

LINE, TRACK, STATIONS AND SYSTEMS
DESIGN UNIT 023
MILPITAS STATION

INTERIOR PARTITION SCHEDULE
SHEET 1 OF 3

CADD FILENAME C700–S–DB–A601.dwg
SIZE D | SCALE NONE
CONTRACT NO. C700 | REV. 0
AREA CODE DB | SHEET NO. A601 | PAGE NO. 0489

JosephG Jun 26, 2013 – 3:04pm G:\Current Projects\VTA–Berryessa Extension Project\Station – Milpitas\CAD\Drawings Out\13–0710 C700 Milpitas Station – RFC Submit\C700–S–DB–A601.dwg

INTERIOR PARTITION SCHEDULE

NOTE: PROVIDE 3/4" THICK FIRE RETARDANT TREATED PLYWOOD (5 PLY, CDX GRADE) PANELS AT ALL WALLS USED FOR MOUNTING EQUIPMENT. PANEL SHALL BE 4 BY 8 FEET MOUNTED HORIZONTALLY WITH THE BOTTOM OF PANELS AT THE HEIGHT OF 3 OR 4 FEET ABOVE THE FLOOR. PAINT TO MATCH WALLS.

WALL TYPE	DETAILS	DESCRIPTION	FIRE RATING	SOUND RATING
D4	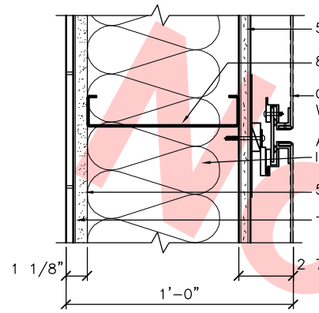	5/8"GYP BD 8" METAL STUDS @ 16" OC COMPOSITE WALL PANEL WP-1 ACOUSTICAL BATT INSULATION 5/8" CEM BACKER BD TILE	–	(STC)
D5	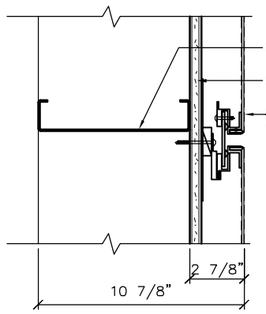	8" METAL STUDS @ 16" OC 5/8" GYP BD COMPOSITE WALL PANEL WP-1	–	
E1	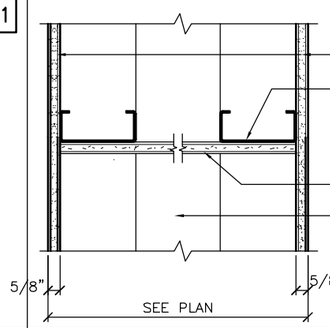	5/8" TYPE X GYP BD 8" METAL STUDS @ 16" OC 5/8" GYP BD CROSS BRACES AIR SPACE	1-HR UL V446	
E2 E3	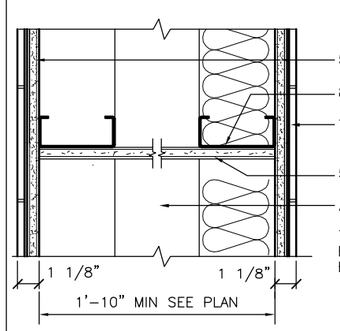	5/8" CEM BACKER BD 8" METAL STUDS @ 16" OC TILE EACH SIDE 5/8" GYP BD CROSS BRACES AIR SPACE TYPE E3: SAME AS E2 EXCEPT WITH ACOUSTICAL BATT INSULATION	–	

WALL TYPE	DETAILS	DESCRIPTION	FIRE RATING	SOUND RATING
F1	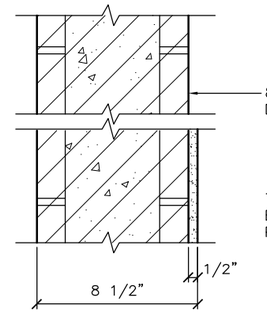	8" CMU – SEE STRUCT DWGS	2-HR UL U-905	(STC)
F2		TYPE F2: SAME AS F1 EXCEPT WITH 1/2" CEMENT PLASTER	2-HR UL DESIGN –	
F3	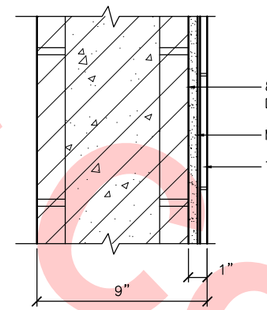	8" CMU – SEE STRUCT DWGS MORTAR BED TILE	2-HR UL U-905	
F4	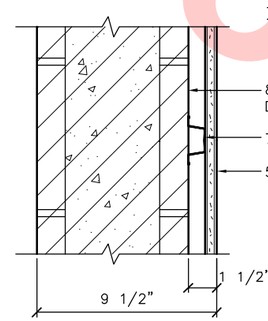	TREASURY VAULT SIDE 8" CMU – SEE STRUCT DWGS 7/8" FURRING CHANNEL 5/8" GYP BD	2-HR UL U-905	
F5	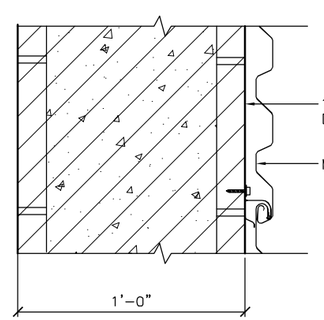	12" CMU – SEE STRUCT DWGS METAL WALL PANEL, WP-2	2-HR UL U-905	
F6	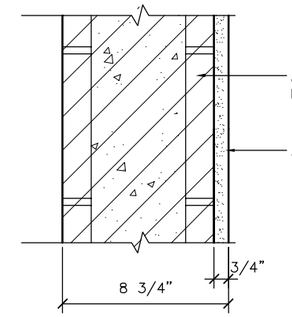	8" CMU – SEE STRUCT DWGS 3/4" CEMENT PLASTER	3-HR UL U-904	
F7	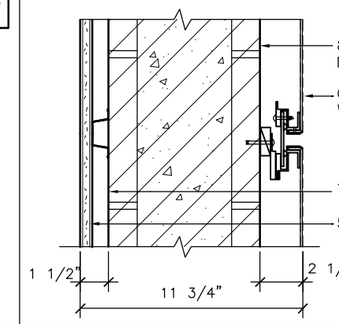	8" CMU – SEE STRUCT DWGS COMPOSITE WALL PANEL WP-1 7/8" FURRING CHANNEL 5/8" GYP BD		
F8	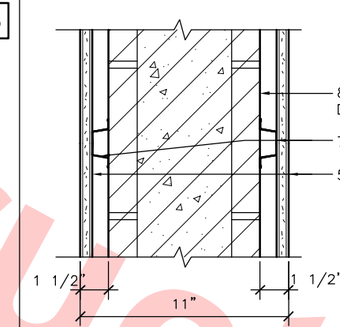	8" CMU – SEE STRUCT DWGS 7/8" FURRING CHANNEL 5/8" GYP BD	2-HR UL U-905	
G1	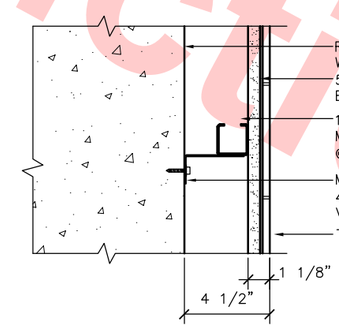	RETAINING WALL 5/8" CEM BACKER BD 1 5/8" METAL STUDS @ 16" OC METAL CLIP @ 4'-0" OC VERTICAL TILE		

Santa Clara Valley Transportation Authority

____NO EXCEPTIONS TAKEN (NET)
____MAKE CORRECTIONS NOTED (MCN)
____AMEND AND RESUBMIT (A/R)

Any action shown above is subject to the terms of the contract and does not relieve the Contractor of any of its obligations under the contract, including design and detailing.

Contract No.: DB11002F

By: _____ Date: _____

Not For Construction

REV	DATE	BY	SUB	APP	DESCRIPTION
0	20130710				READINESS FOR CONSTRUCTION

DESIGNED BY S. DEBNATH
DRAWN BY R. COLLADO
CHECKED BY E. BALLADA
IN CHARGE R. BARLAAN
DATE 20130710

LICENSED ARCHITECT SOMESH DEBNATH No. C21523 STATE OF CALIFORNIA

Skanska Shimmick Herzog
1436 California Circle
Milpitas, California 95035
A Joint Venture

Anil Verma Associates, Inc.
1970 Broadway, Suite 525, Oakland, CA 94612
Phone: (510) 835-2537 Fax: (510) 835-2339

Lockwood, Andrews & Newnam, Inc. A LAN & RAIN COMPANY
T·Y·LIN INTERNATIONAL

SUBMITTED _____
APPROVED _____

VTA BART SILICON VALLEY
BART SILICON VALLEY BERRYESSA EXTENSION

LINE, TRACK, STATIONS AND SYSTEMS
DESIGN UNIT 023
MILPITAS STATION

INTERIOR PARTITION SCHEDULE
SHEET 2 OF 3

CADD FILENAME C700-S-DB-A602.dwg
SIZE D | SCALE NONE
CONTRACT NO. C700 | REV. 0
AREA CODE DB | SHEET NO. A602 | PAGE NO. 0490

Jun 26, 2013 – 3:06pm G:\Current Projects\VTA-Berryessa Extension Project\Station – Milpitas\CAD\Drawings Out\13-0710 C700 Milpitas Station – RFC Submitt\C700-S-DB-A602.dwg
JosephG

INTERIOR PARTITION SCHEDULE

NOTE: PROVIDE 3/4" THICK FIRE RETARDANT TREATED PLYWOOD (5 PLY, CDX GRADE) PANELS AT ALL WALLS USED FOR MOUNTING EQUIPMENT. PANEL SHALL BE 4 BY 8 FEET MOUNTED HORIZONTALLY WITH THE BOTTOM OF PANELS AT THE HEIGHT OF 3 OR 4 FEET ABOVE THE FLOOR. PAINT TO MATCH WALLS.

WALL TYPE	DETAILS	DESCRIPTION	FIRE RATING	SOUND RATING
G2	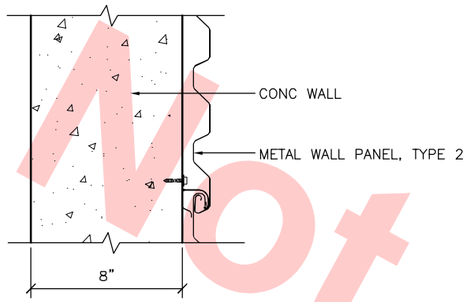	CONC WALL METAL WALL PANEL, TYPE 2	2-HR UL DESIGN –	
H1 H1A	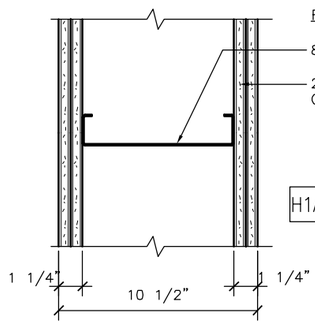	ROOM SIDE 8" METAL STUDS @ 16" OC 2 LAYERS 5/8" TYPE X GYP BD H1A SAME AS H1 EXCEPT CERAMIC TILES @ JANITOR ROOM SIDE	2-HR UL DESIGN U419	
H2	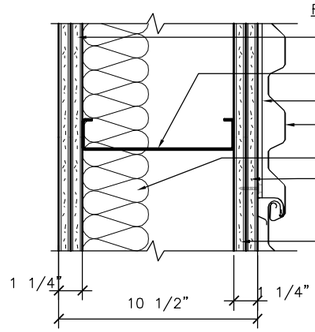	ROOM SIDE 2 LAYERS 5/8" TYPE X GYP BD 8" METAL STUDS @ 16" OC BLDG PAPER METAL WALL PANEL WP-2 THERMAL INSULATION 5/8" GYP SHEATHING 5/8" TYPE X GYP BD	2-HR UL DESIGN U419	
H3	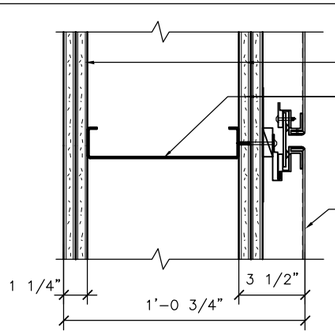	5/8" GYP BD 8" METAL STUDS @ 16" OC COMPOSITE WALL PANEL WP-1	2-HR UL DESIGN U419	
H4	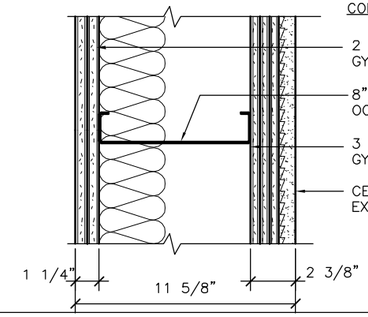	CONCOURSE OPENING 2 LAYERS 5/8" TYPE X GYP BD 8" METAL STUDS @ 16" OC 3 LAYERS 1/2" TYPE X GYP BD CEMENT PLASTER OVER EXPANDED METAL LATH H4A SAME AS H4 EXCEPT 4" METAL STUDS	2-HR UL DESIGN U419	
H5	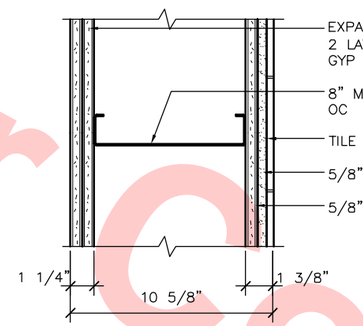	EXPANDED METAL 2 LAYERS 5/8" TYPE X GYP BD 8" METAL STUDS @ 16" OC TILE 5/8" CEM BACKER BD 5/8" TYP X GYP BD	2-HR UL DESIGN U404	
H6 H6A	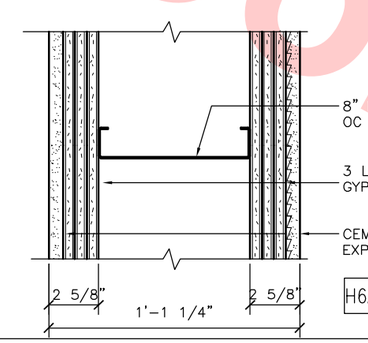	8" METAL STUDS @ 16" OC 3 LAYERS 1/2" TYPE X GYP BD CEMENT PLASTER OVER EXPANDED METAL LATH H6A SAME AS H6 EXCEPT USE 10" METAL STUDS	3-HR UL DESIGN U435	
J1	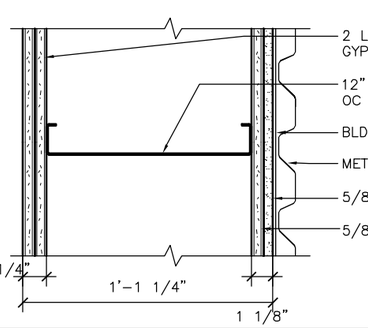	2 LAYERS 5/8" TYPE X GYP BD 12" METAL STUDS @ 16" OC BLDG PAPER METAL WALL PANEL WP-2 5/8" CEM BACKER BD 5/8" TYP X GYP BD	2-HR UL DESIGN U419	
J2	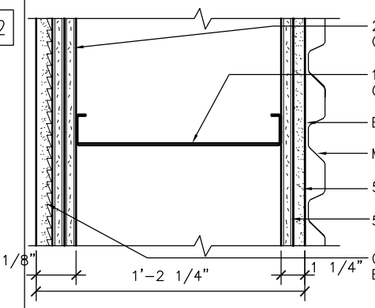	2 LAYERS 5/8" TYPE X GYP BD 12" METAL STUDS @ 16" OC BLDG PAPER METAL WALL PANEL WP-2 5/8" CEM BACKER BD 5/8" TYP X GYP BD CEMENT PLASTER OVER EXPANDED METAL LATH	2-HR UL DESIGN U419	
K1	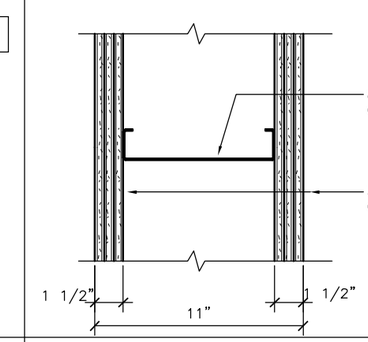	8" METAL STUDS @ 16" OC 3 LAYERS 1/2" TYPE X GYP BD	3-HR UL DESIGN U435	
K2	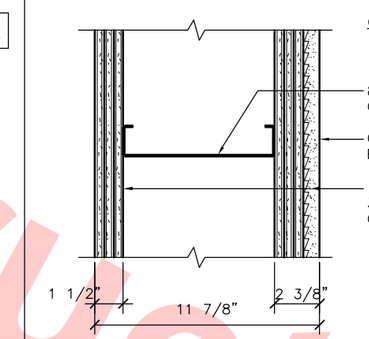	CONCOURSE OPENING 8" METAL STUDS @ 16" OC CEMENT PLASTER OVER EXPANDED METAL LATH 3 LAYERS 1/2" TYPE X GYP BD	3-HR UL DESIGN U435	
K3	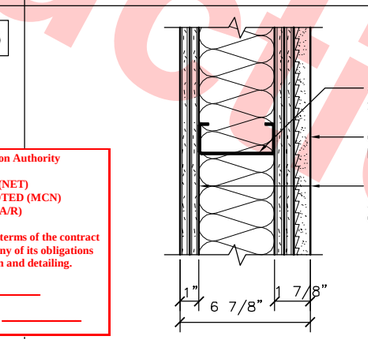	4" X 16 GA METAL STUDS @ 16" OC CEMENT PLASTER OVER EXPANDED METAL LATH 2 LAYERS 1/2" TYPE X GYP BD	2-HR UL DESIGN U419	

Santa Clara Valley Transportation Authority

____NO EXCEPTIONS TAKEN (NET)
____MAKE CORRECTIONS NOTED (MCN)
____AMEND AND RESUBMIT (A/R)

Any action shown above is subject to the terms of the contract and does not relieve the Contractor of any of its obligations under the contract, including design and detailing.

Contract No.: DB11002F

By: _____ Date: _____

Not For Construction

REV	DATE	BY	SUB	APP	DESCRIPTION
0	20130710				READINESS FOR CONSTRUCTION

DESIGNED BY S. DEBNATH
DRAWN BY R. COLLADO
CHECKED BY E. BALLADA
IN CHARGE R. BARLAAN
DATE 20130710

LICENSED ARCHITECT SOMESH DEBNATH No. C21523 STATE OF CALIFORNIA

Skanska Shimmick Herzog
1436 California Circle
Milpitas, California 95035
A Joint Venture

Anil Verma Associates, Inc.
1970 Broadway, Suite 525, Oakland, CA 94612
Phone: (510) 835-2537 Fax: (510) 835-2339

SUBMITTED

Lockwood, Andrews & Newnam, Inc. A LEO A DALY COMPANY
T·Y·LIN INTERNATIONAL

APPROVED

VTA BART SILICON VALLEY
BART SILICON VALLEY BERRYESSA EXTENSION

LINE, TRACK, STATIONS AND SYSTEMS DESIGN UNIT 023
MILPITAS STATION

INTERIOR PARTITION SCHEDULE
SHEET 3 OF 3

CADD FILENAME C700-S-DB-A603.dwg
SIZE D | SCALE NONE
CONTRACT NO. C700 | REV. 0
AREA CODE DB | SHEET NO. A603 | PAGE NO. 0491

Jun 26, 2013 – 3:06pm G:\Current Projects\VTA-Berryessa Extension Project\Station – Milpitas\CAD\Drawings Out\13-0710 C700 Milpitas Station – RFC Submit\C700-S-DB-A603.dwg
JosephG

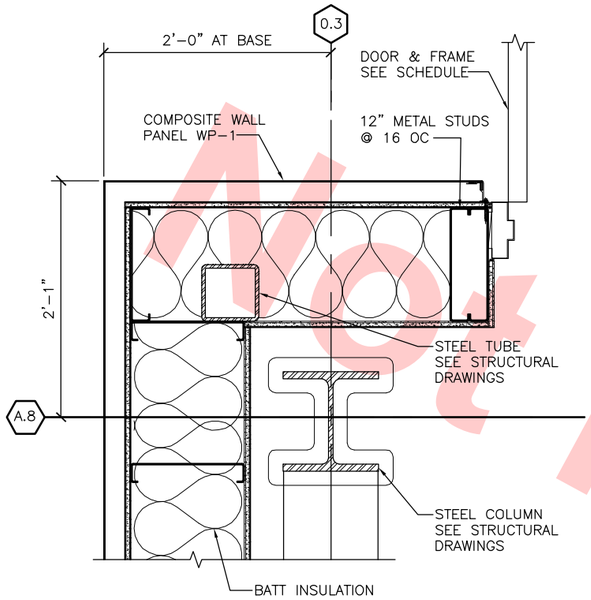

WALL DETAIL 1 DB-A604 DB-A565
SCALE: 1 1/2" = 1'-0"

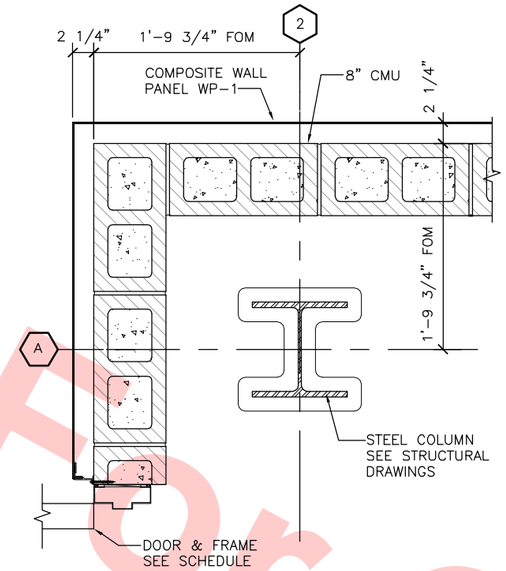

FURRED WALL 2 DB-A604 DB-A121X
SCALE: 1 1/2" = 1'-0"

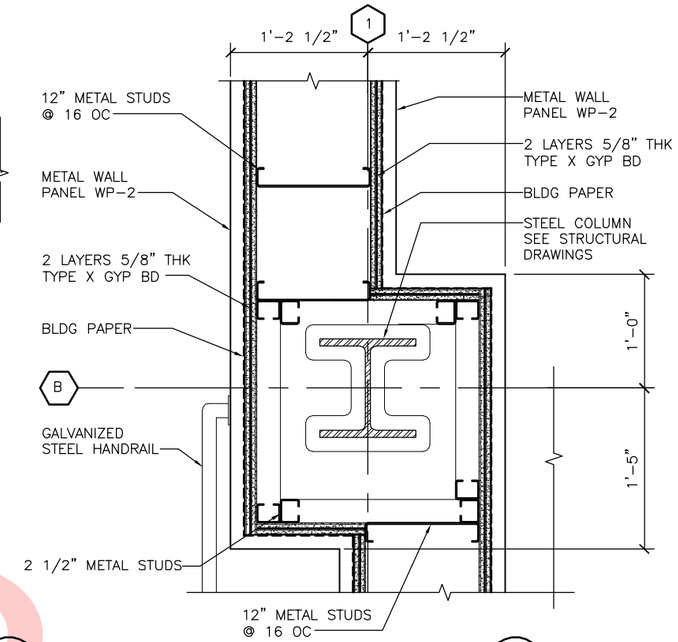

FURRED WALL 3 DB-A604 DB-A565
SCALE: 1 1/2" = 1'-0"

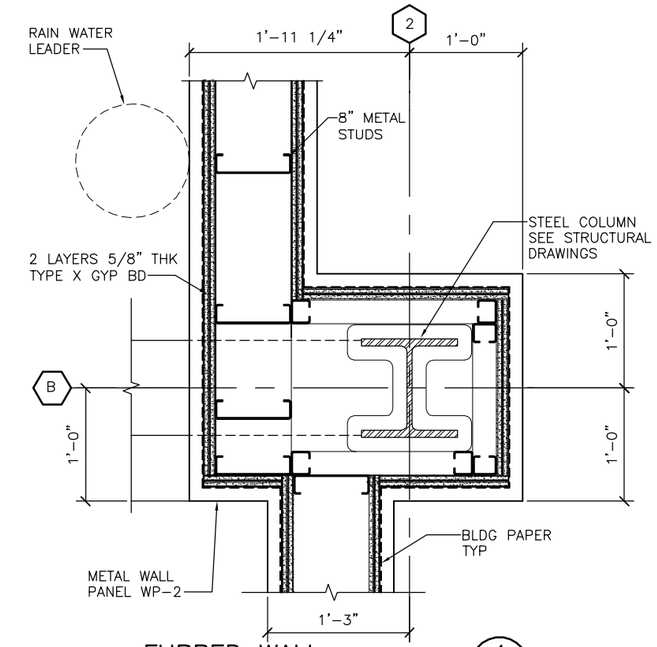

FURRED WALL 4 DB-A604 DB-A121X
SCALE: 1 1/2" = 1'-0"

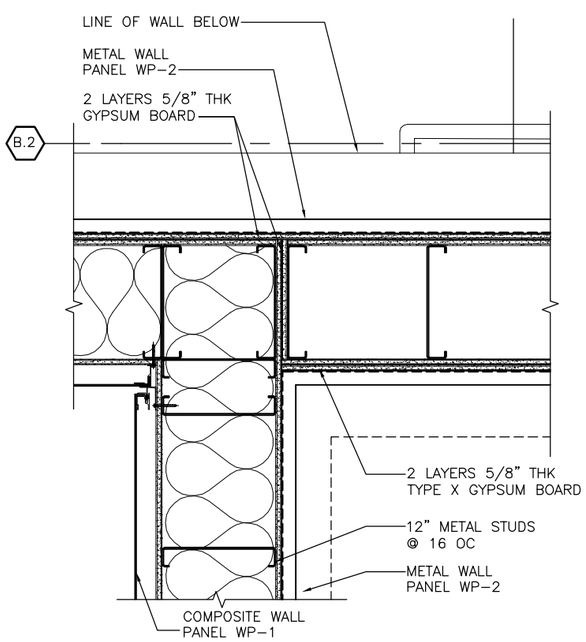

FURRED WALL 5 DB-A604 DB-A565
SCALE: 1 1/2" = 1'-0"

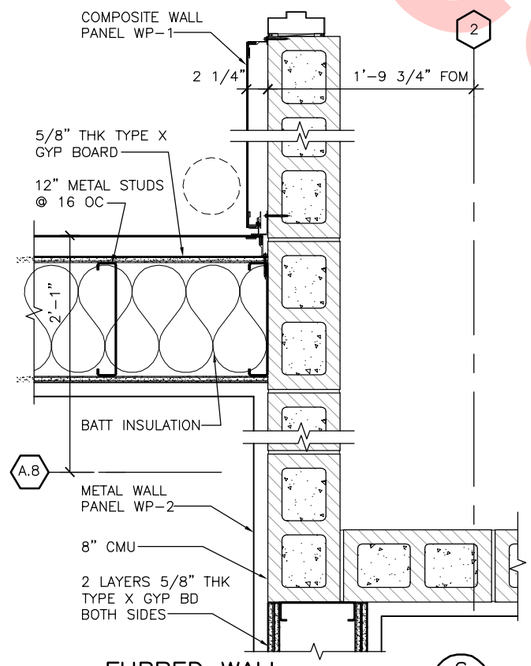

FURRED WALL 6 DB-A604 DB-A121X
SCALE: 1 1/2" = 1'-0"

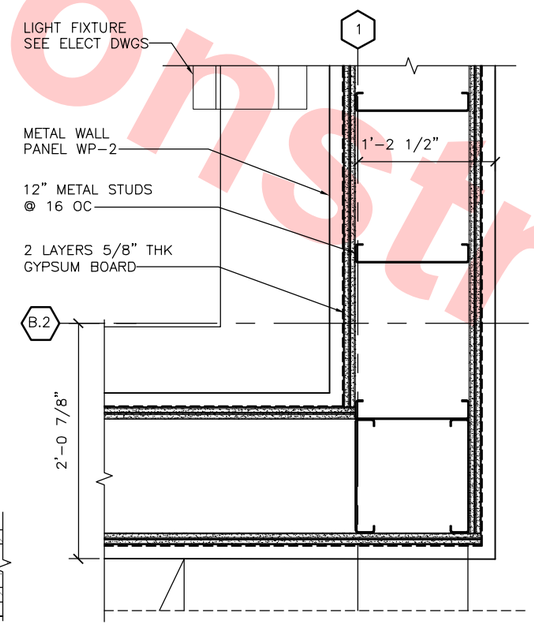

FURRED WALL 7 DB-A604 DB-A565
SCALE: 1 1/2" = 1'-0"

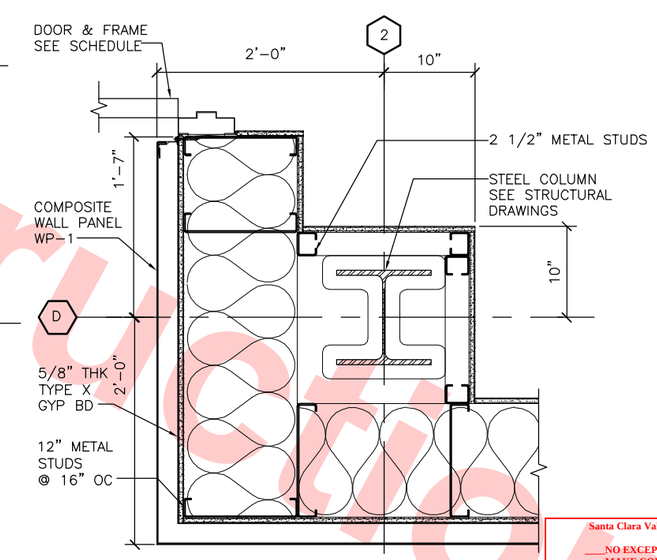

FURRED WALL 8 DB-A604 DB-A121X
SCALE: 1 1/2" = 1'-0"

Santa Clara Valley Transportation Authority
____NO EXCEPTIONS TAKEN (NET)
____MAKE CORRECTIONS NOTED (MCN)
____AMEND AND RESUBMIT (A/R)
Any action shown above is subject to the terms of the contract and does not relieve the Contractor of any of its obligations under the contract, including design and detailing.
Contract No.: DB11002F
By: _____ Date: _____

Not For Construction

REV	DATE	BY	SUB	APP	DESCRIPTION
0	20130710				READINESS FOR CONSTRUCTION

DESIGNED BY S. DEBNATH
DRAWN BY R. COLLADO
CHECKED BY E. BALLADA
IN CHARGE R. BARLAAN
DATE 20130710

LICENSED ARCHITECT SUMESH DEBNATH No. C21523 STATE OF CALIFORNIA

Skanska Shimmick Herzog
1436 California Circle
Milpitas, California 95035
A Joint Venture

Anil Verma Associates, Inc.
1970 Broadway, Suite 520 Oakland, CA 94612
Phone: (510) 835-2537 Fax: (510) 835-2339

Lockwood, Andrews & Newnam, Inc. A LEA & BALF COMPANY

T·Y·LIN INTERNATIONAL

SUBMITTED _____ APPROVED _____

VTA BART SILICON VALLEY
BART SILICON VALLEY BERRYESSA EXTENSION

LINE, TRACK, STATIONS AND SYSTEMS
DESIGN UNIT 023
MILPITAS STATION
WALL DETAILS

CADD FILENAME C700-S-DB-A604.dwg
SIZE D | SCALE 1 1/2"=1'-0"
CONTRACT NO. C700 | REV. 0
AREA CODE DB | SHEET NO. A604 | PAGE NO. 0492

JosephG Jun 26, 2013 – 3:07pm G:\Current Projects\VTA-Berryessa Extension Project\Station – Milpitas\CAD\Drawings Out\13-0710 C700 Milpitas Station – RFC Submitt\C700-S-DB-A604.dwg

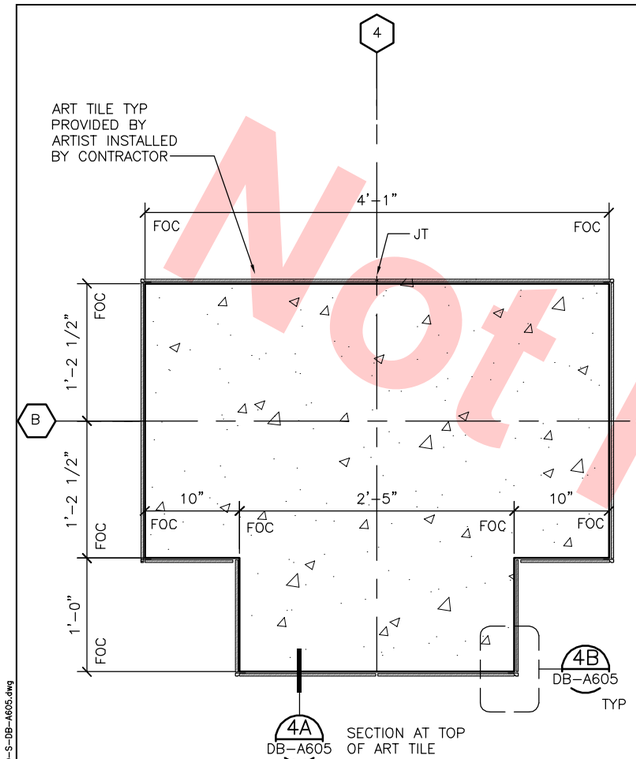

ART TILE AT COLUMN (1 / DB-A605)
SCALE: 1 1/2" = 1'-0
DB-A112X

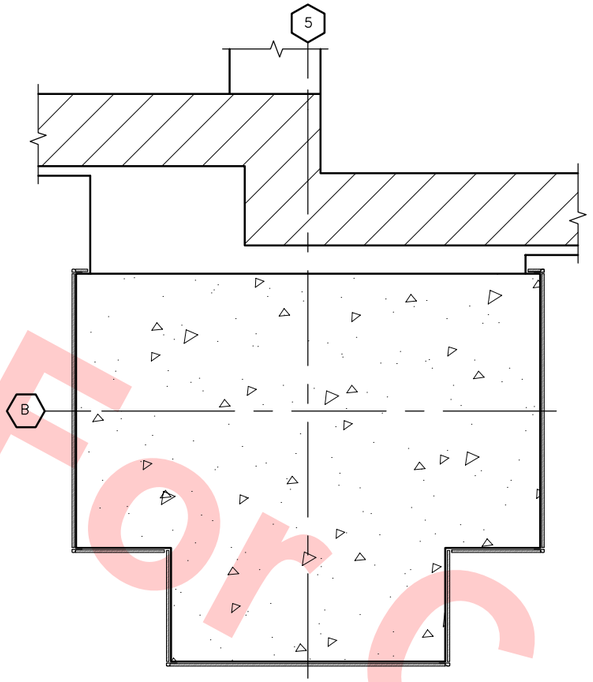

ART TILE AT COLUMN (2 / DB-A605)
SCALE: 1-1/2" = 1'-0
DB-A561

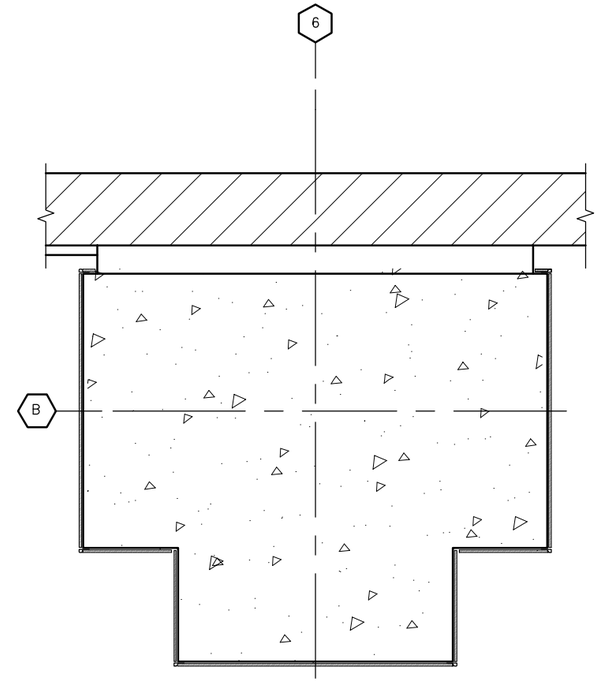

ART TILE AT COLUMN (3 / DB-A605)
SCALE: 1 1/2" = 1'-0
DB-A112X

NOTE:
STAINLESS STEEL TRIM BY CONTRACTOR TYPICAL

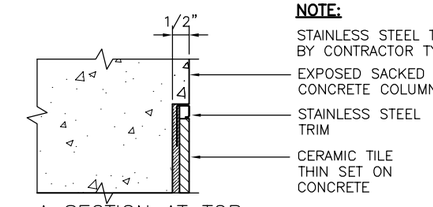

A SECTION AT TOP

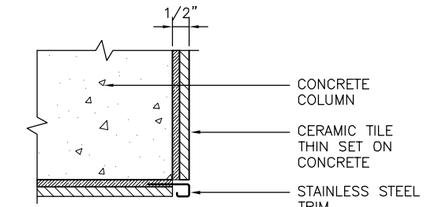

B PLAN AT CORNER

ART TILE EDGE DETAILS (4 / DB-A605)
SCALE: 6" = 1'-0"

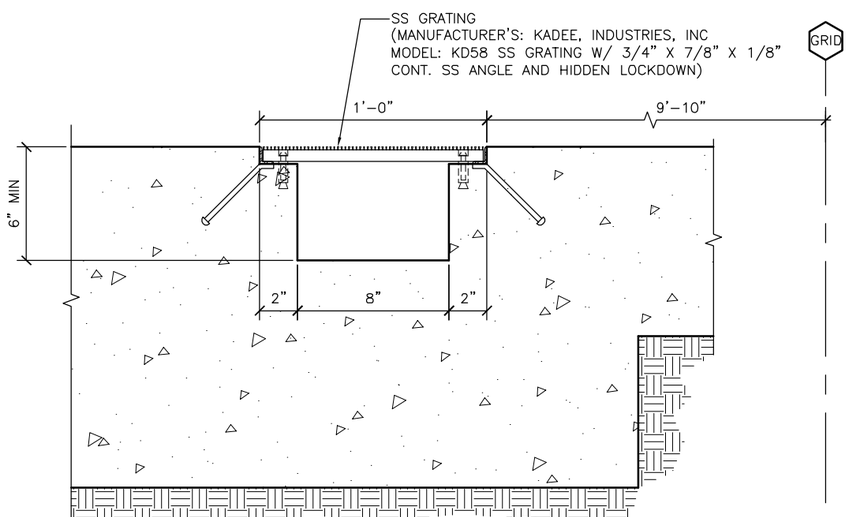

GRATING DETAIL (5 / DB-A605)
SCALE: 3" = 1'-0
DB-A122X
DB-A123X
DB-A124X
DB-A125X
DB-A214

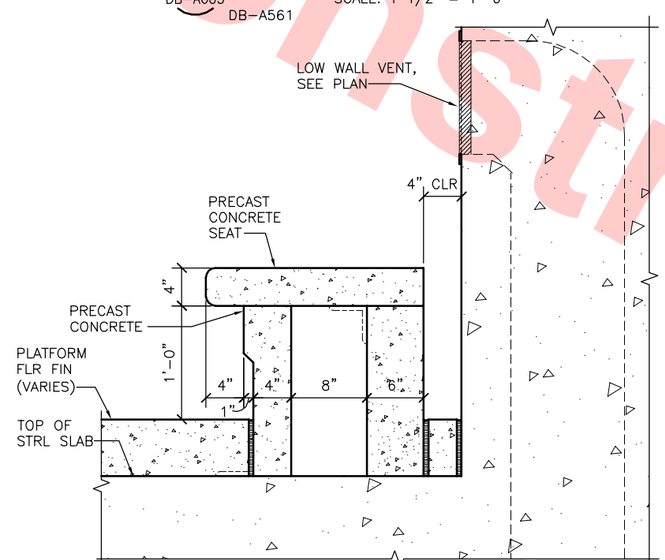

SECTION – CONCRETE BENCH (6 / DB-A605)
SCALE: 1 1/2" = 1'-0
DB-A113X
DB-A114X
DB-A115X
DB-A214

NOTE:
FOR BENCH STRUCTURAL DETAILS & CONNECTION, SEE BFS SHEET 1/AS52 SIMILAR AND SHEET 4/AS53 FOR DIMENSIONS

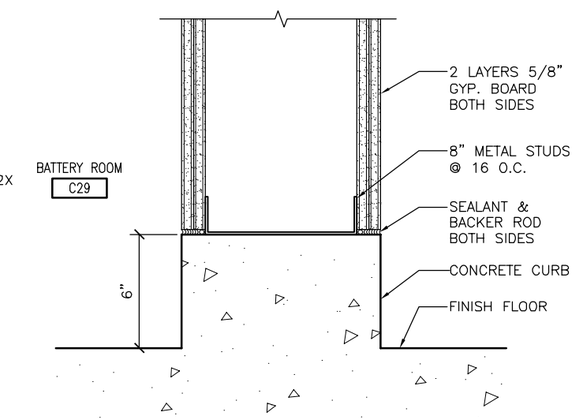

CONCRETE CURB (7 / DB-A605)
SCALE: 3" = 1'-0"
DB-A121X

Santa Clara Valley Transportation Authority

____NO EXCEPTIONS TAKEN (NET)
____MAKE CORRECTIONS NOTED (MCN)
____AMEND AND RESUBMIT (A/R)

Any action shown above is subject to the terms of the contract and does not relieve the Contractor of any of its obligations under the contract, including design and detailing.

Contract No.: DB11002F

By: _____ Date: _____

Not For Construction

REV	DATE	BY	SUB	APP	DESCRIPTION
0	20130710				READINESS FOR CONSTRUCTION

DESIGNED BY S. DEBNATH
DRAWN BY R. COLLADO
CHECKED BY E. BALLADA
IN CHARGE R. BARLAAN
DATE 20130710

LICENSED ARCHITECT SOMESH DEBNATH No. C21523 STATE OF CALIFORNIA

Skanska Shimmick Herzog
1436 California Circle
Milpitas, California 95035
A Joint Venture

Anil Verma Associates, Inc.
1970 Broadway, Suite 525, Oakland, CA 94612
Phone: (510) 835-2537 Fax: (510) 835-2339

Lockwood, Andrews & Newnam, Inc. A LAN & BAH COMPANY
T·Y·LIN INTERNATIONAL

SUBMITTED _____
APPROVED _____

VTA BART SILICON VALLEY
BART SILICON VALLEY BERRYESSA EXTENSION

LINE, TRACK, STATIONS AND SYSTEMS
DESIGN UNIT 023
MILPITAS STATION

WALL DETAILS

CADD FILENAME C700-S-DB-A605.dwg
SIZE D | SCALE AS NOTED
CONTRACT NO. C700 | REV. 0
AREA CODE DB | SHEET NO. A605 | PAGE NO. 0493

JosephG Jun 26, 2013 – 3:08pm G:\Current Projects\VTA-Berryessa Extension Project\Station – Milpitas\CAD\Drawings Out\13-0710 C700 Milpitas Station – RFC Submittc700-S-DB-A605.dwg

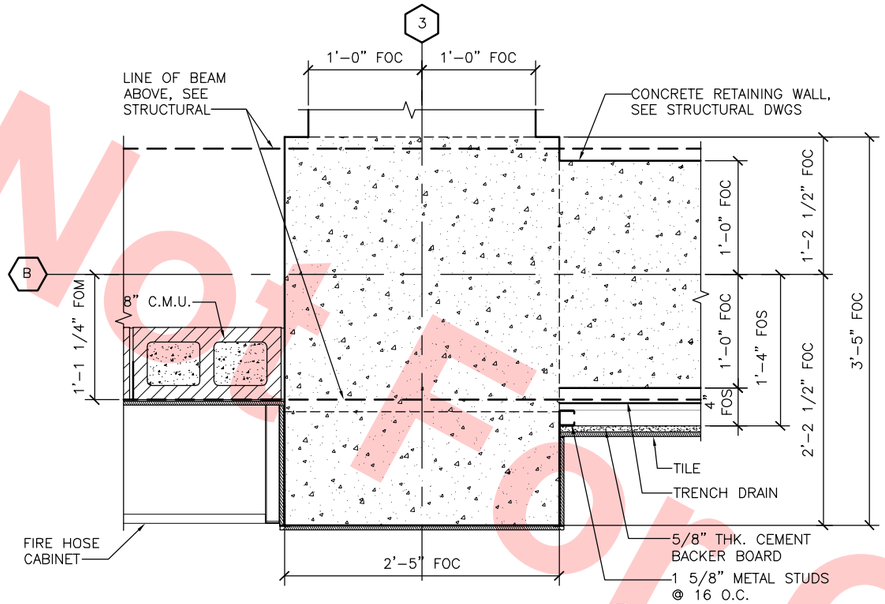

FURRED WALL 1 DB-A606 DB-A111
SCALE: 1 1/2" = 1'-0

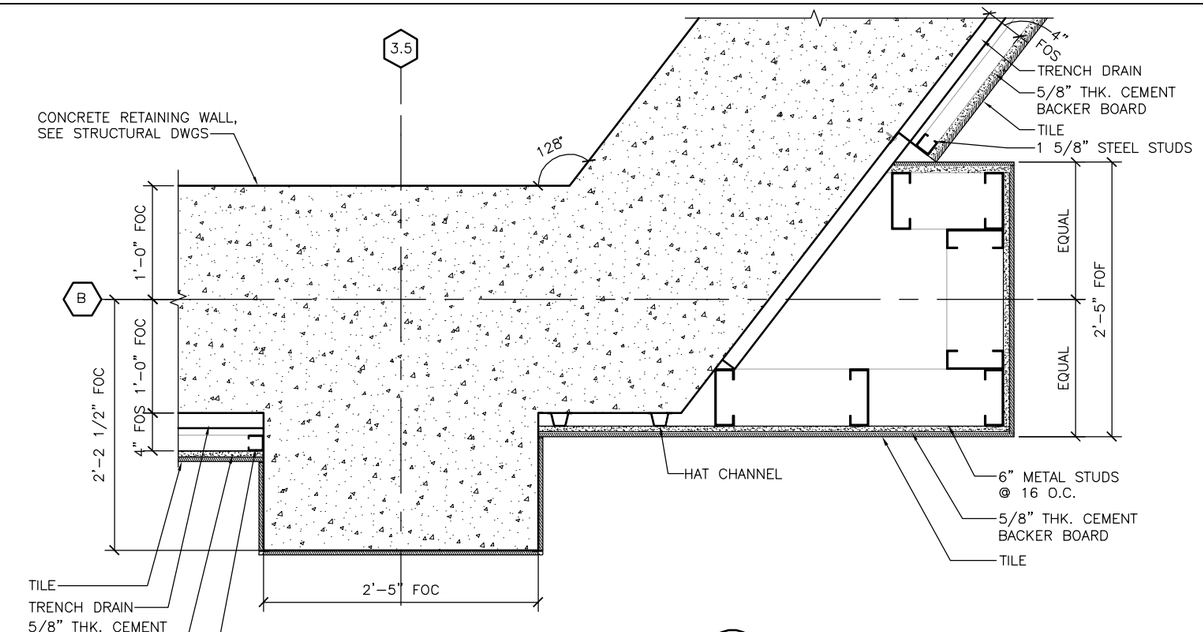

FURRED WALL 2 DB-A606 DB-A111
SCALE: 1 1/2" = 1'-0

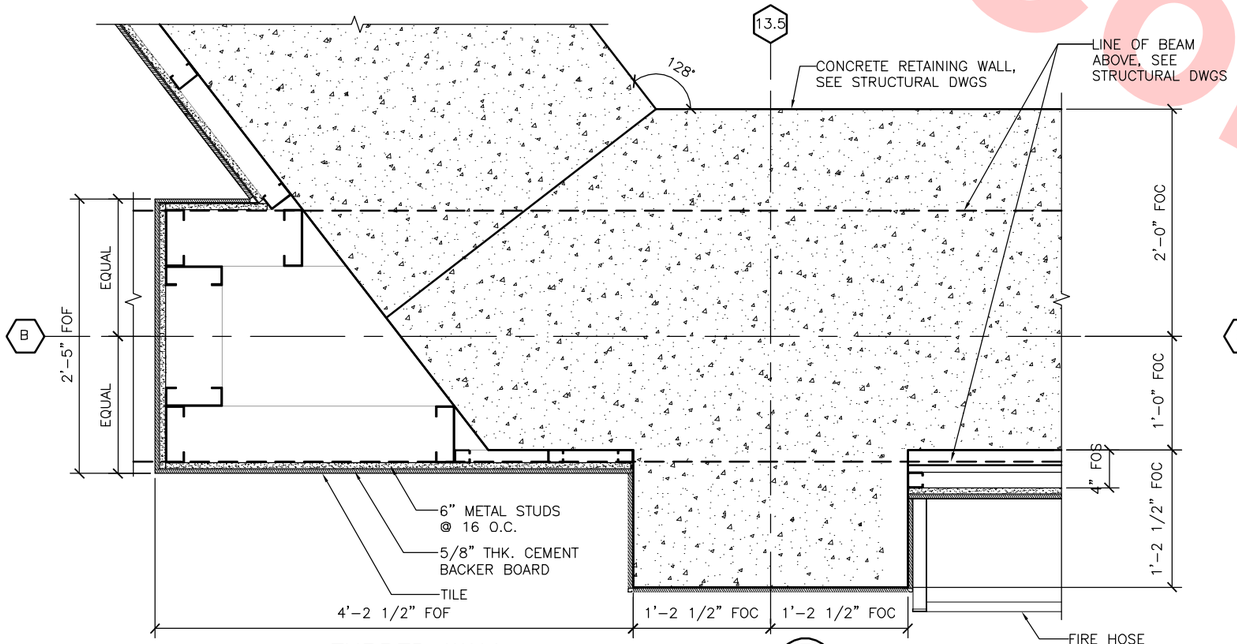

FURRED WALL 3 DB-A606 DB-A114X
SCALE: 1 1/2" = 1'-0

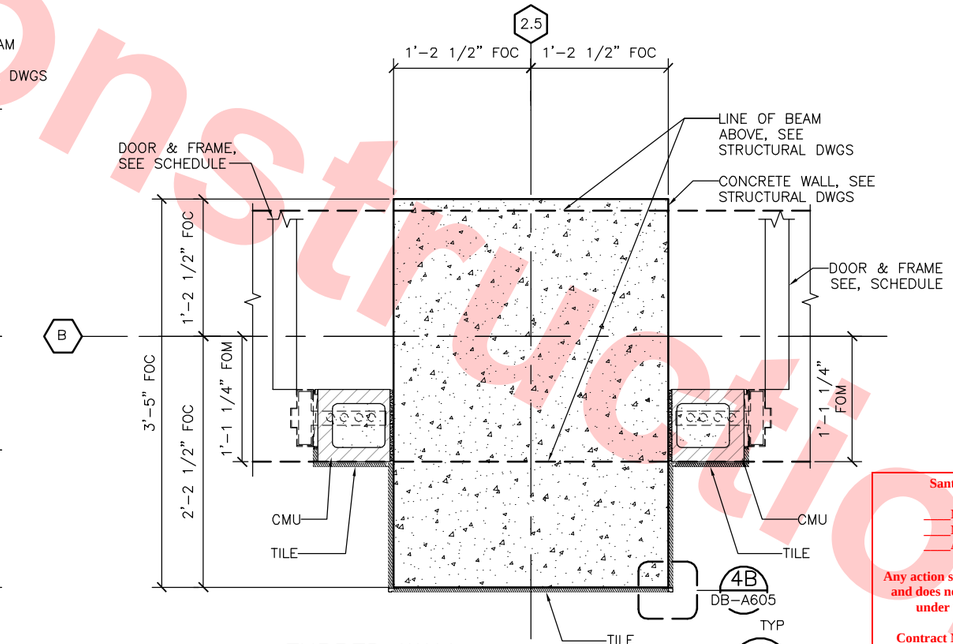

FURRED WALL 4 DB-A606 DB-A111
SCALE: 1 1/2" = 1'-0

Santa Clara Valley Transportation Authority

____NO EXCEPTIONS TAKEN (NET)
____MAKE CORRECTIONS NOTED (MCN)
____AMEND AND RESUBMIT (A/R)

Any action shown above is subject to the terms of the contract and does not relieve the Contractor of any of its obligations under the contract, including design and detailing.

Contract No.: DB11002F

By: _____ Date: _____

Not For Construction

REV	DATE	BY	SUB	APP	DESCRIPTION
0	20130710				READINESS FOR CONSTRUCTION

DESIGNED BY S. DEBNATH
DRAWN BY R. COLLADO
CHECKED BY E. BALLADA
IN CHARGE R. BARLAAN
DATE 20130710

LICENSED ARCHITECT SUKESH DEBNATH No. C21523 STATE OF CALIFORNIA

Skanska Shimmick Herzog
1436 California Circle
Milpitas, California 95035
A Joint Venture

Anil Verma Associates, Inc.
1970 Broadway, Suite 525, Oakland, CA 94612
Phone: (510) 835-2537 Fax: (510) 835-2339

Lockwood, Andrews & Newnam, Inc. A LEO A DALY COMPANY

T-Y-LIN INTERNATIONAL

SUBMITTED _____ APPROVED _____

VTA BART SILICON VALLEY
BART SILICON VALLEY BERRYESSA EXTENSION

LINE, TRACK, STATIONS AND SYSTEMS DESIGN UNIT 023
MILPITAS STATION
WALL DETAILS

CADD FILENAME C700-S-DB-A606.dwg
SIZE D | SCALE 1 1/2"=1'-0
CONTRACT NO. C700 | REV. 0
AREA CODE DB | SHEET NO. A606 | PAGE NO. 0494

Jun 26, 2013 – 3:09pm G:\Current Projects\VTA-Berryessa Extension Project\Station – Milpitas\CAD\Drawings Out\13-0710 C700 Milpitas Station – RFC Submit\C700-S-DB-A606.dwg
JosephG

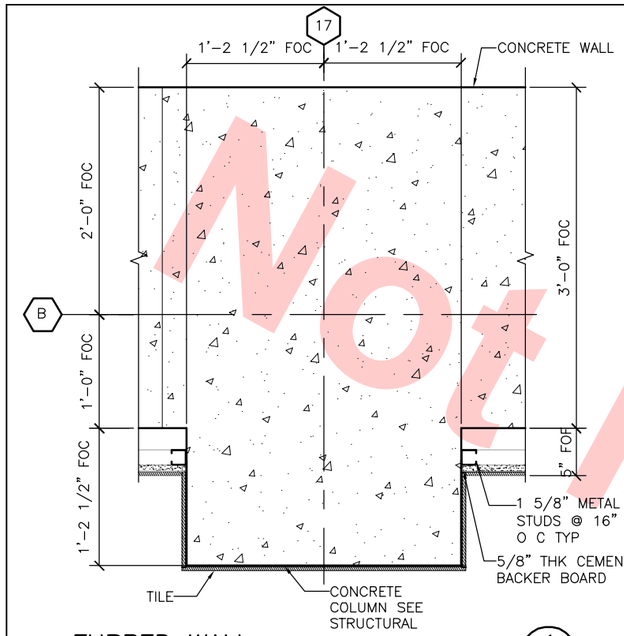

FURRED WALL (1 / DB-A607) — SCALE: 1 1/2" = 1'-0"

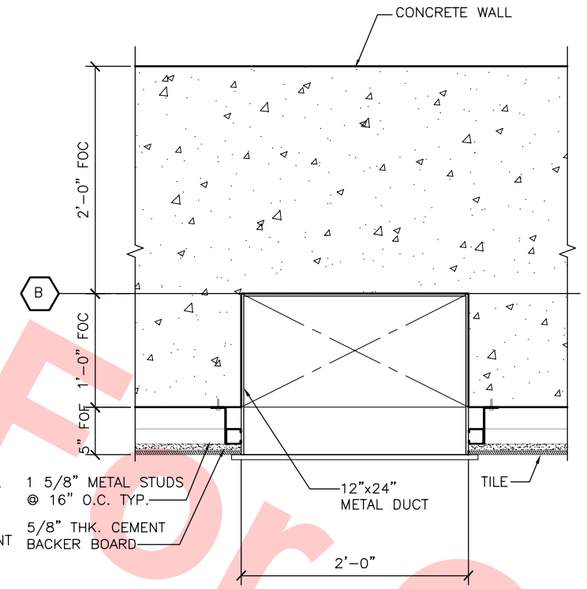

FURRED WALL @ LOW WALL VENT (2 / DB-A607) — SCALE: 1 1/2" = 1'-0"

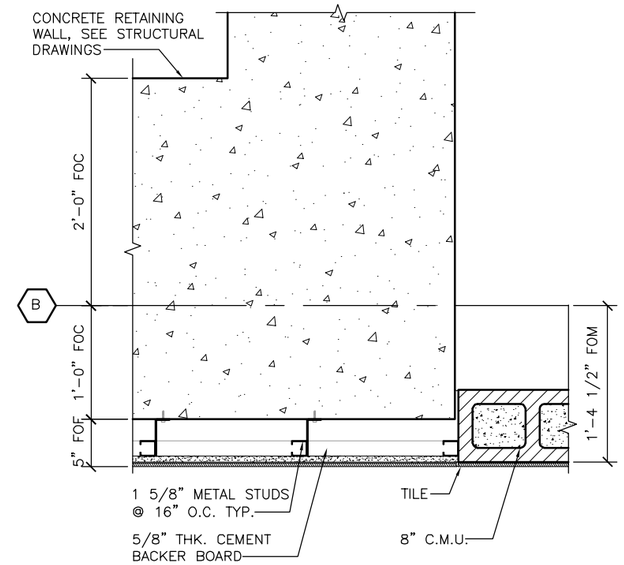

FURRED WALL (3 / DB-A607) — SCALE: 1 1/2" = 1'-0"

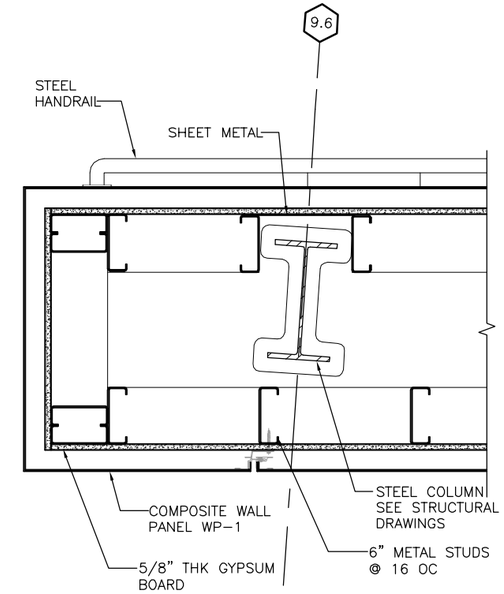

WALL DETAIL (4 / DB-A607) — SCALE: 1 1/2" = 1'-0"

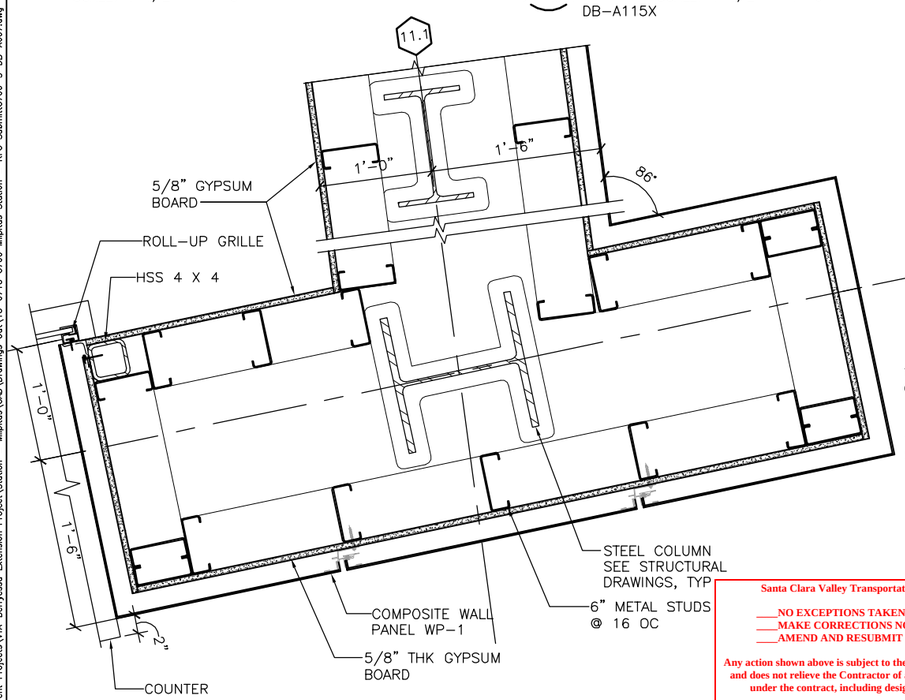

WALL DETAIL (5 / DB-A607) — SCALE: 1 1/2" = 1'-0"

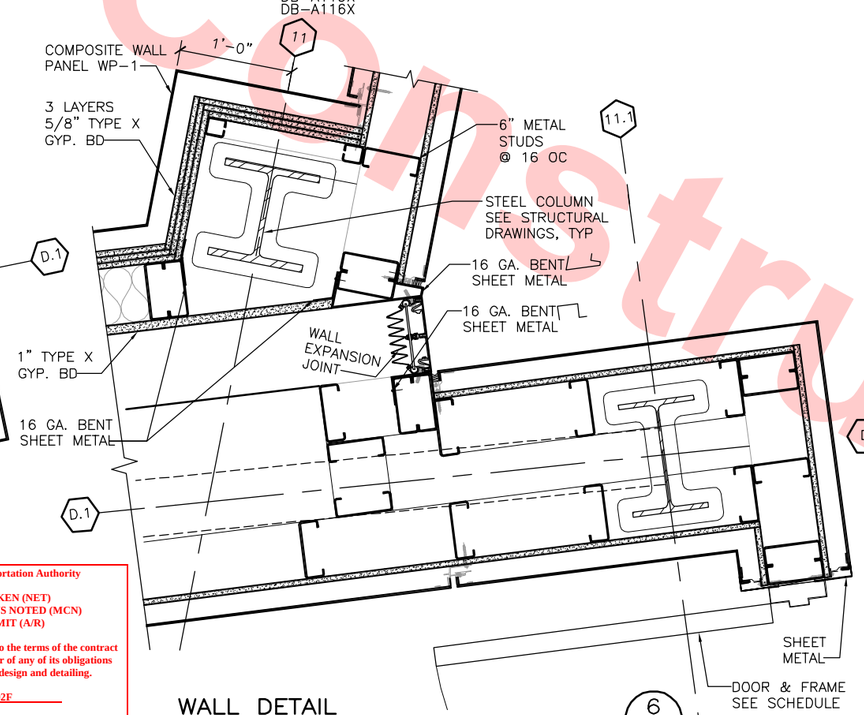

WALL DETAIL (6 / DB-A607) — SCALE: 1 1/2" = 1'-0"

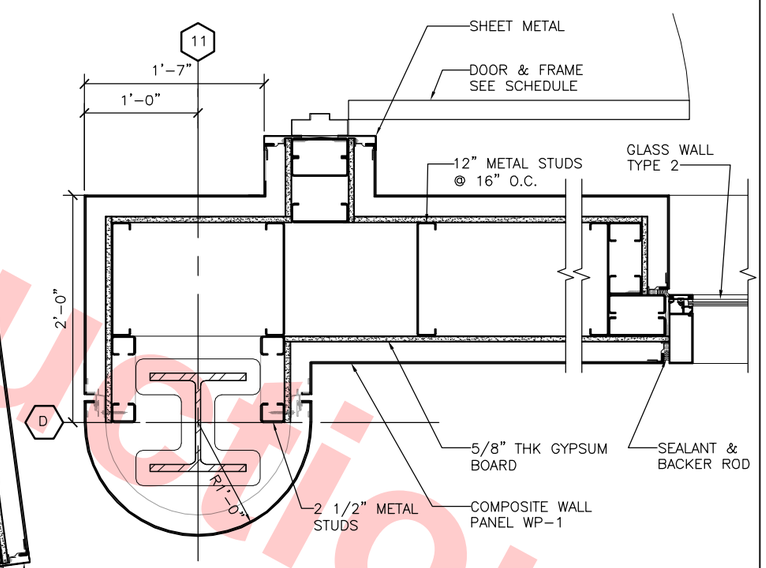

WALL DETAIL (7 / DB-A607) — SCALE: 1 1/2" = 1'-0"

Santa Clara Valley Transportation Authority

____NO EXCEPTIONS TAKEN (NET)
____MAKE CORRECTIONS NOTED (MCN)
____AMEND AND RESUBMIT (A/R)

Any action shown above is subject to the terms of the contract and does not relieve the Contractor of any of its obligations under the contract, including design and detailing.

Contract No.: DB11002F

By: _____ Date: _____

Not For Construction

REV	DATE	BY	SUB	APP	DESCRIPTION
0	20130710				READINESS FOR CONSTRUCTION

DESIGNED BY S. DEBNATH
DRAWN BY R. COLLADO
CHECKED BY E. BALLADA
IN CHARGE R. BARLAAN
DATE 20130710

LICENSED ARCHITECT — SOMESH DEBNATH — No. C21523 — STATE OF CALIFORNIA

Skanska Shimmick Herzog — 1436 California Circle, Milpitas, California 95035 — A Joint Venture

Anil Verma Associates, Inc. — 1970 Broadway, Suite 555, Oakland, CA 94612, Phone: (510) 835-2537, Fax: (510) 835-2339 — SUBMITTED

Lockwood, Andrews & Newnam, Inc. — A CH2M HILL COMPANY — T·Y·LIN INTERNATIONAL — APPROVED

VTA BART SILICON VALLEY — BART SILICON VALLEY BERRYESSA EXTENSION

LINE, TRACK, STATIONS AND SYSTEMS DESIGN UNIT 023
MILPITAS STATION
WALL DETAILS

CADD FILENAME C700-S-DB-A607.dwg
SIZE D | SCALE 1 1/2"=1'-0
CONTRACT NO. C700 | REV. 0
AREA CODE DB | SHEET NO. A607 | PAGE NO. 0495

JosephG Jun 26, 2013 - 3:10pm G:\Current Projects\VTA-Berryessa Extension Project\Station - Milpitas\CAD\Drawings Out\13-0710 C700 Milpitas Station - RFC Submit\C700-S-DB-A607.dwg

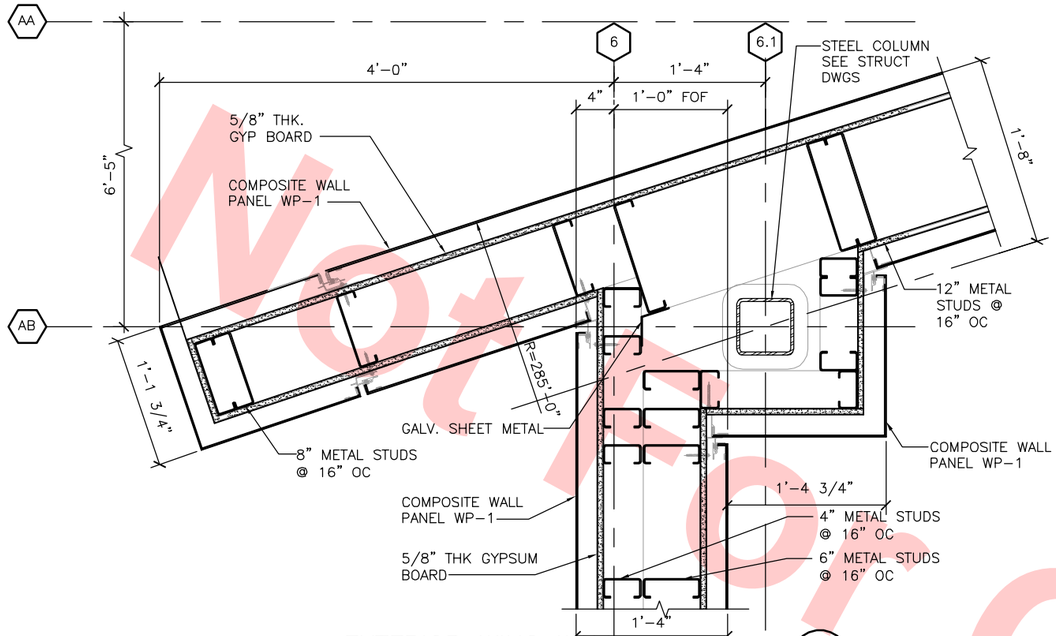

EXTERIOR WING WALL (1) DB-A608
SCALE: 1 1/2" = 1'-0"

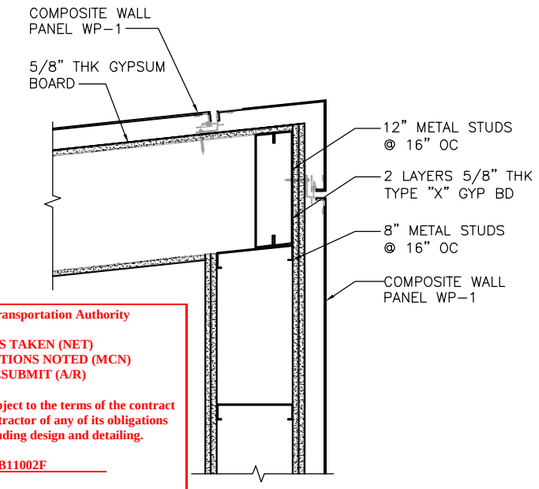

EXTERIOR WING WALL (2) DB-A608 — DB-A122X, DB-A123X
SCALE: 1 1/2" = 1'-0"

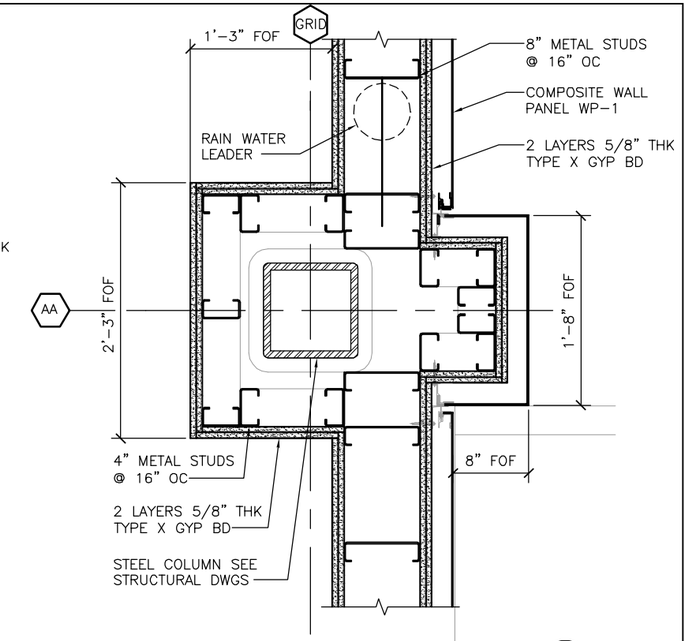

FURRED WALL (3) DB-A608 — DB-A122X, DB-A123X
SCALE: 1 1/2" = 1'-0"

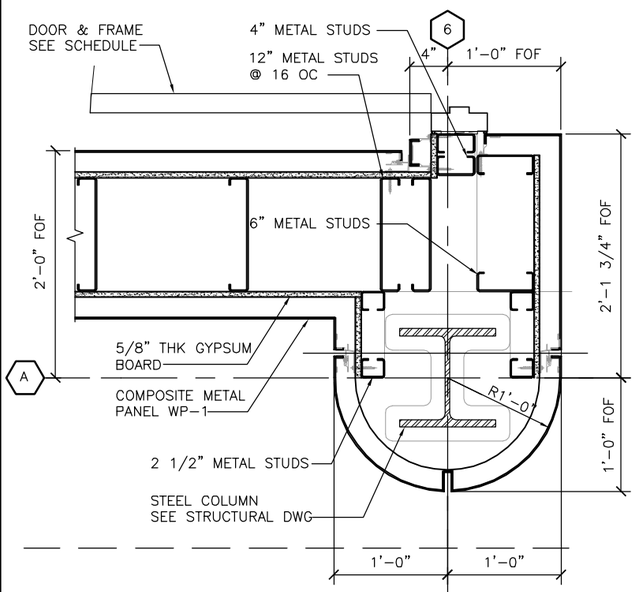

FURRED WALL (4) DB-A608 — DB-A561
SCALE: 1 1/2" = 1'-0"

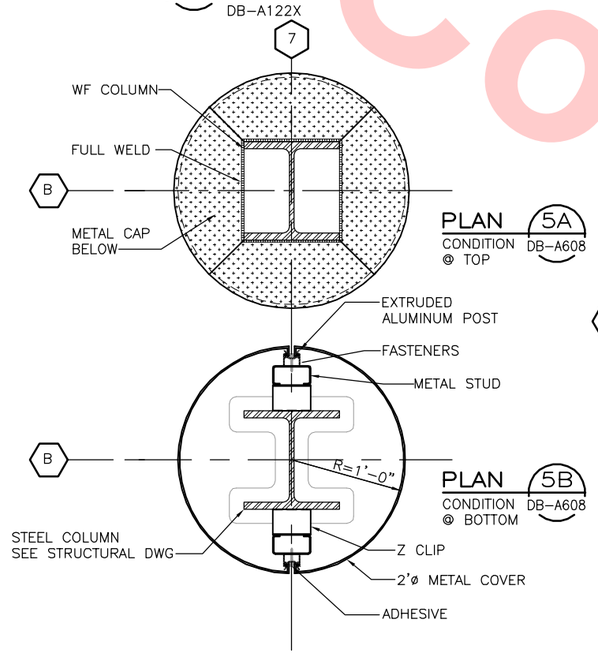

PLAN (5A) DB-A608 — CONDITION @ TOP

PLAN (5B) DB-A608 — CONDITION @ BOTTOM

COLUMN COVER (5) DB-A608 — DB-A122X, DB-A123X, DB-A124X, DB-A125X, DB-A551
SCALE: 1 1/2" = 1'-0"

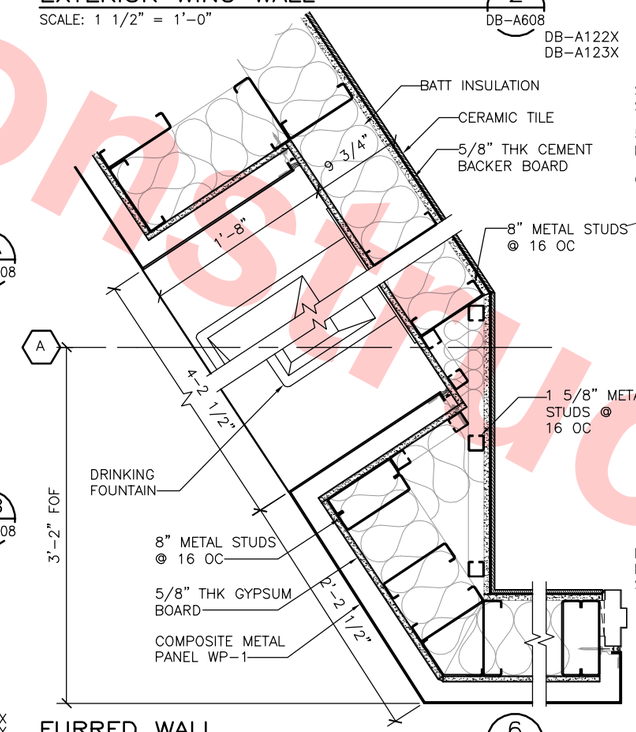

FURRED WALL (6) DB-A608 — DB-A571
SCALE: 1 1/2" = 1'-0"

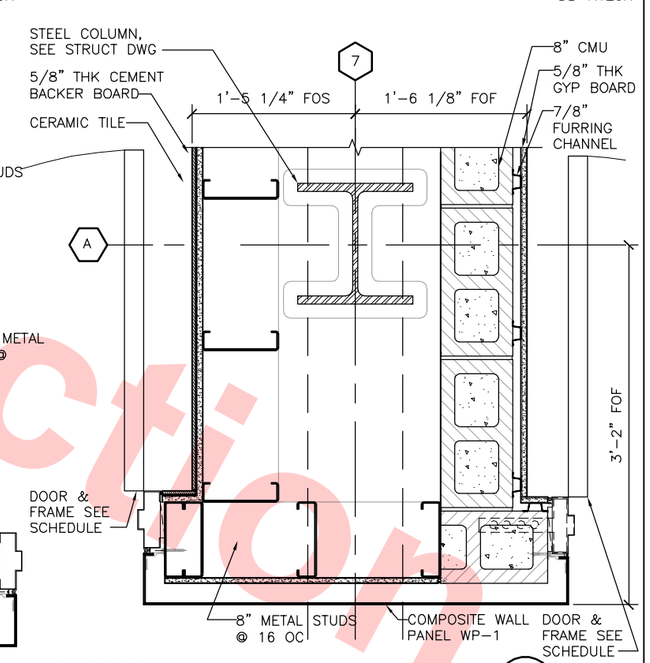

FURRED WALL (7) DB-A608 — DB-A571
SCALE: 1 1/2" = 1'-0"

Not For Construction

Santa Clara Valley Transportation Authority
____NO EXCEPTIONS TAKEN (NET)
____MAKE CORRECTIONS NOTED (MCN)
____AMEND AND RESUBMIT (A/R)
Any action shown above is subject to the terms of the contract and does not relieve the Contractor of any of its obligations under the contract, including design and detailing.
Contract No.: DB11002F
By: _____ Date: _____

REV	DATE	BY	SUB	APP	DESCRIPTION
0	20130710				READINESS FOR CONSTRUCTION

DESIGNED BY S. DEBNATH
DRAWN BY R. COLLADO
CHECKED BY E. BALLADA
IN CHARGE R. BARLAAN
DATE 20130710

LICENSED ARCHITECT SOMESH DEBNATH No. C21523 STATE OF CALIFORNIA

Skanska Shimmick Herzog
1436 California Circle
Milpitas, California 95035
A Joint Venture

Anil Verma Associates, Inc.
1970 Broadway, Suite 555, Oakland, CA 94612
Phone: (510) 835-2537 Fax: (510) 835-2339
SUBMITTED

Lockwood, Andrews & Newnam, Inc. — A LAN & BALV COMPANY
T·Y·LIN INTERNATIONAL
APPROVED

VTA BART SILICON VALLEY
BART SILICON VALLEY BERRYESSA EXTENSION

LINE, TRACK, STATIONS AND SYSTEMS DESIGN UNIT 023
MILPITAS STATION
WALL DETAILS

CADD FILENAME C700-S-DB-A608.dwg
SIZE D | SCALE 1 1/2" = 1'-0"
CONTRACT NO. C700 | REV. 0
AREA CODE DB | SHEET NO. A608 | PAGE NO. 0496

JosephG Jun 26, 2013 – 3:11pm G:\Current Projects\VTA-Berryessa Extension Project\Station – Milpitas\CAD\Drawings Out\13-0710 C700 Milpitas Station – RFC Submit\C700-S-DB-A608.dwg

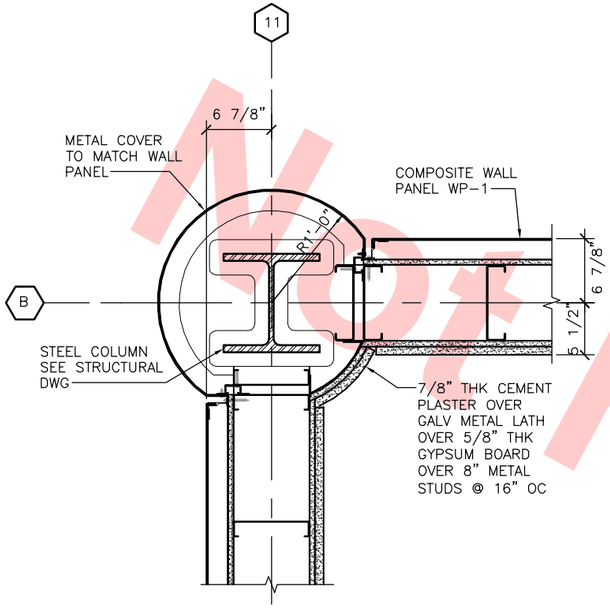

COLUMN COVER 1 DB-A609 DB-A563
SCALE: 1-1/2" = 1'-0

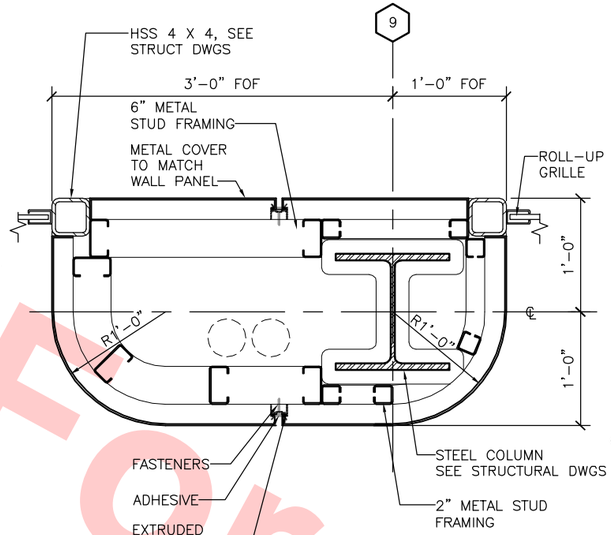

COLUMN COVER 2 DB-A609 DB-A125X
SCALE: 1-1/2" = 1'-0

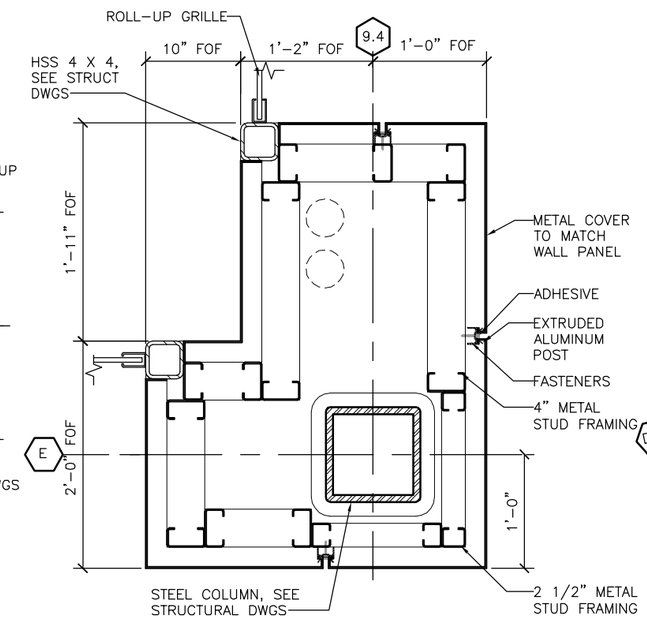

COLUMN COVER 3 DB-A609 DB-A125X
SCALE: 1-1/2" = 1'-0

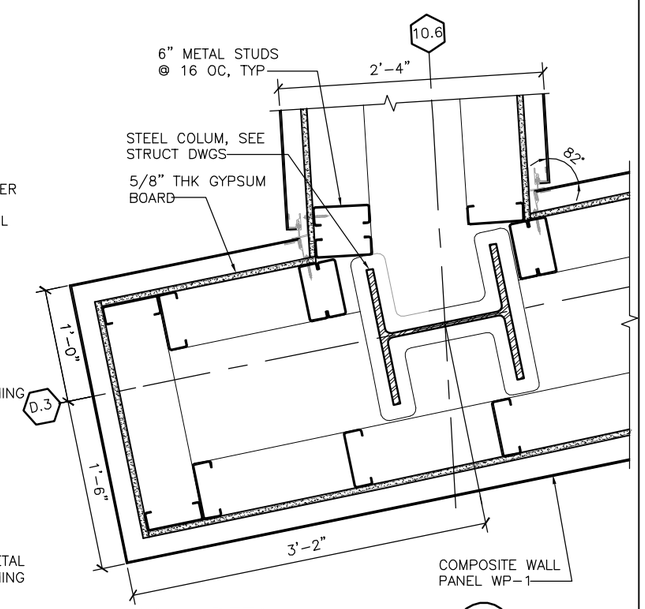

WALL DETAIL 4 DB-A609 DB-A573
SCALE: 1-1/2" = 1'-0

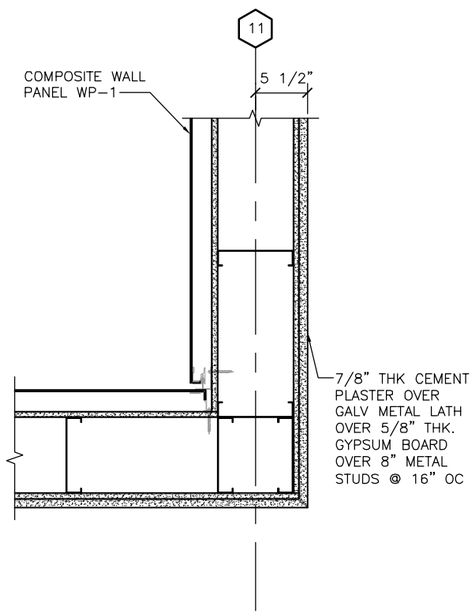

WALL DETAIL 5 DB-A609 DB-A124X
SCALE: 1-1/2" = 1'-0

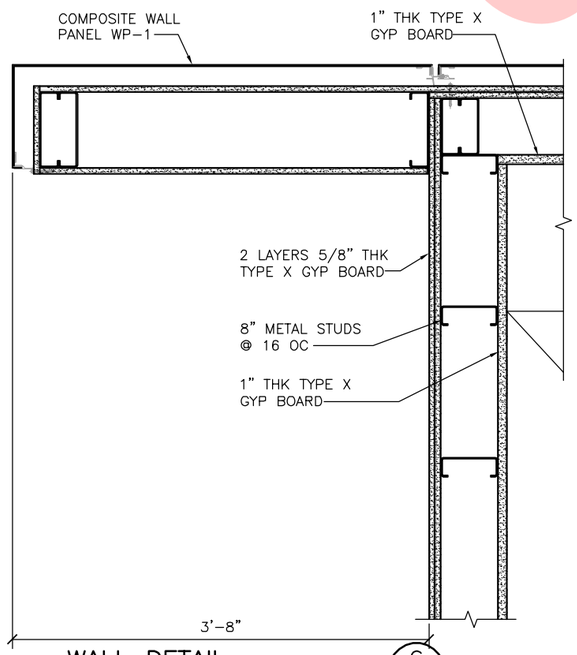

WALL DETAIL 6 DB-A609 DB-A125X
SCALE: 1-1/2" = 1'-0

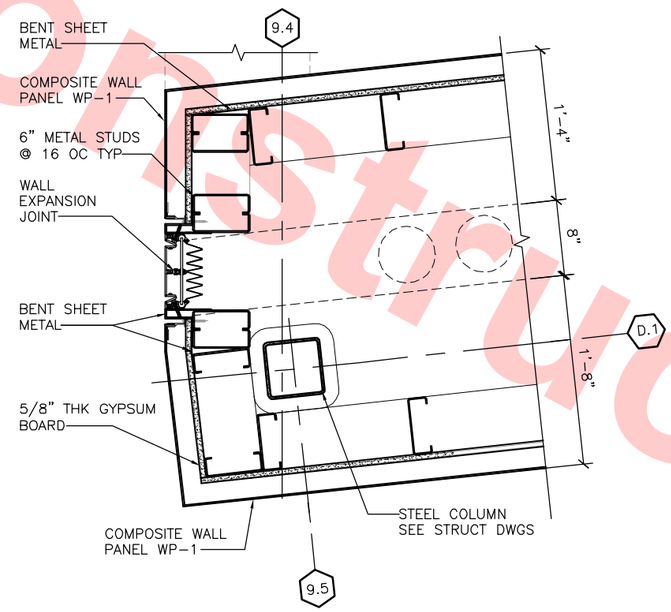

WALL DETAIL 7 DB-A609 DB-A573
SCALE: 1-1/2" = 1'-0

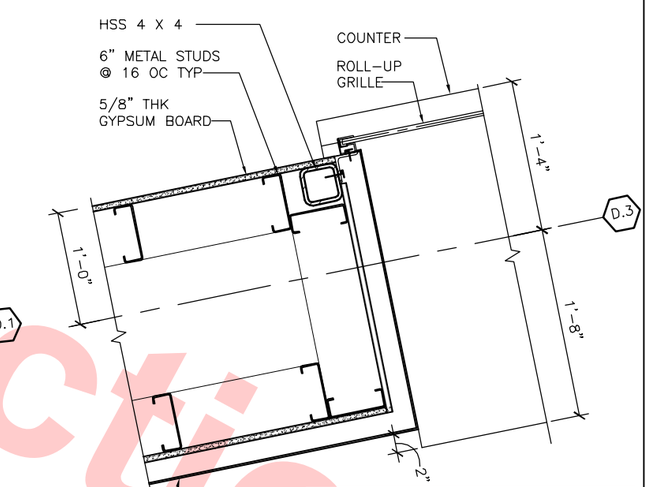

WALL DETAIL 8 DB-A609 DB-A573
SCALE: 1-1/2" = 1'-0

Santa Clara Valley Transportation Authority

____NO EXCEPTIONS TAKEN (NET)
____MAKE CORRECTIONS NOTED (MCN)
____AMEND AND RESUBMIT (A/R)

Any action shown above is subject to the terms of the contract and does not relieve the Contractor of any of its obligations under the contract, including design and detailing.

Contract No.: DB11002F

By: _____ Date: _____

Not For Construction

REV	DATE	BY	SUB	APP	DESCRIPTION
0	20130710				READINESS FOR CONSTRUCTION

DESIGNED BY S. DEBNATH
DRAWN BY R. COLLADO
CHECKED BY E. BALLADA
IN CHARGE R. BARLAAN
DATE 20130710

LICENSED ARCHITECT SANJEEV DEBNATH No. C21523 STATE OF CALIFORNIA

Skanska Shimmick Herzog
1436 California Circle
Milpitas, California 95035
A Joint Venture

Anil Verma Associates, Inc.
1970 Broadway, Suite 525, Oakland, CA 94612
Phone: (510) 835-2537 Fax: (510) 835-2339
SUBMITTED

Lockwood, Andrews & Newnam, Inc. A LEO A DALY COMPANY
T·Y·LIN INTERNATIONAL
APPROVED

VTA BART SILICON VALLEY
BART SILICON VALLEY BERRYESSA EXTENSION

LINE, TRACK, STATIONS AND SYSTEMS DESIGN UNIT 023
MILPITAS STATION
WALL DETAILS

CADD FILENAME C700-S-DB-A609.dwg
SIZE D | SCALE 1-1/2"=1'-0"
CONTRACT NO. C700 | REV. 0
AREA CODE DB | SHEET NO. A609 | PAGE NO. 0497

JosephG Jun 26, 2013 – 3:11pm G:\Current Projects\VTA-Berryessa Extension Project\Station – Milpitas\CAD\Drawings Out\13-0710 C700 Milpitas Station – RFC Submit\C700-S-DB-A609.dwg

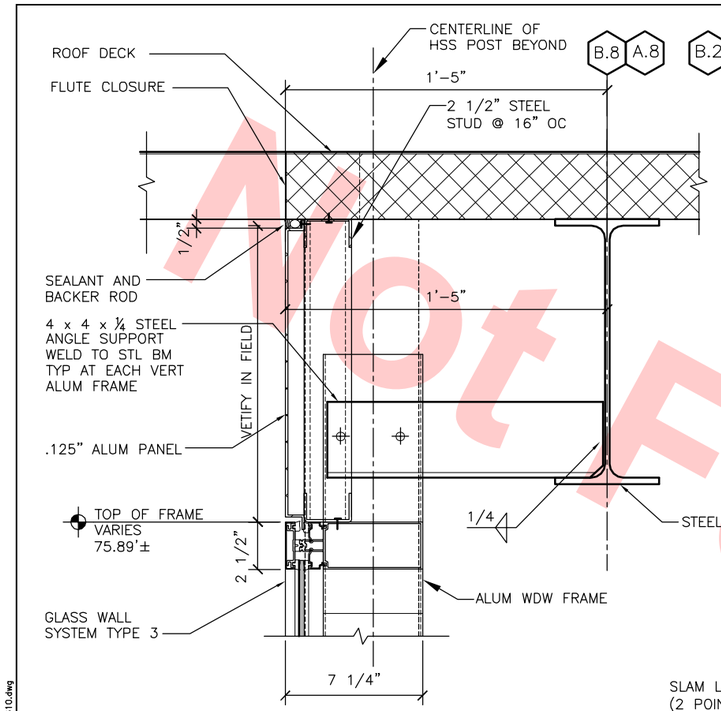

HEAD DETAIL (1 / DB-A610)
SCALE: 3" = 1'-0

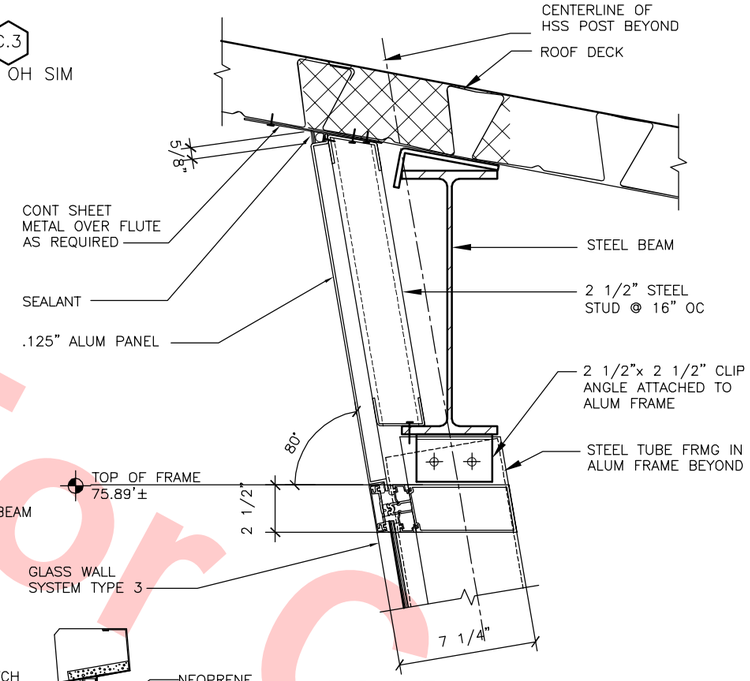

HEAD DETAIL (2 / DB-A610)
SCALE: 3" = 1'-0

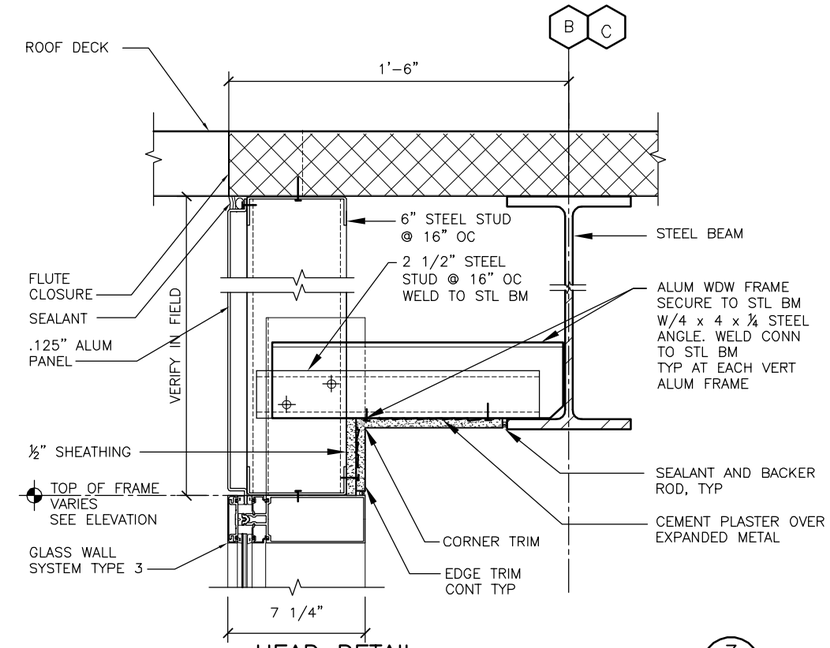

HEAD DETAIL (3 / DB-A610 DB-A722)
SCALE: 3" = 1'-0

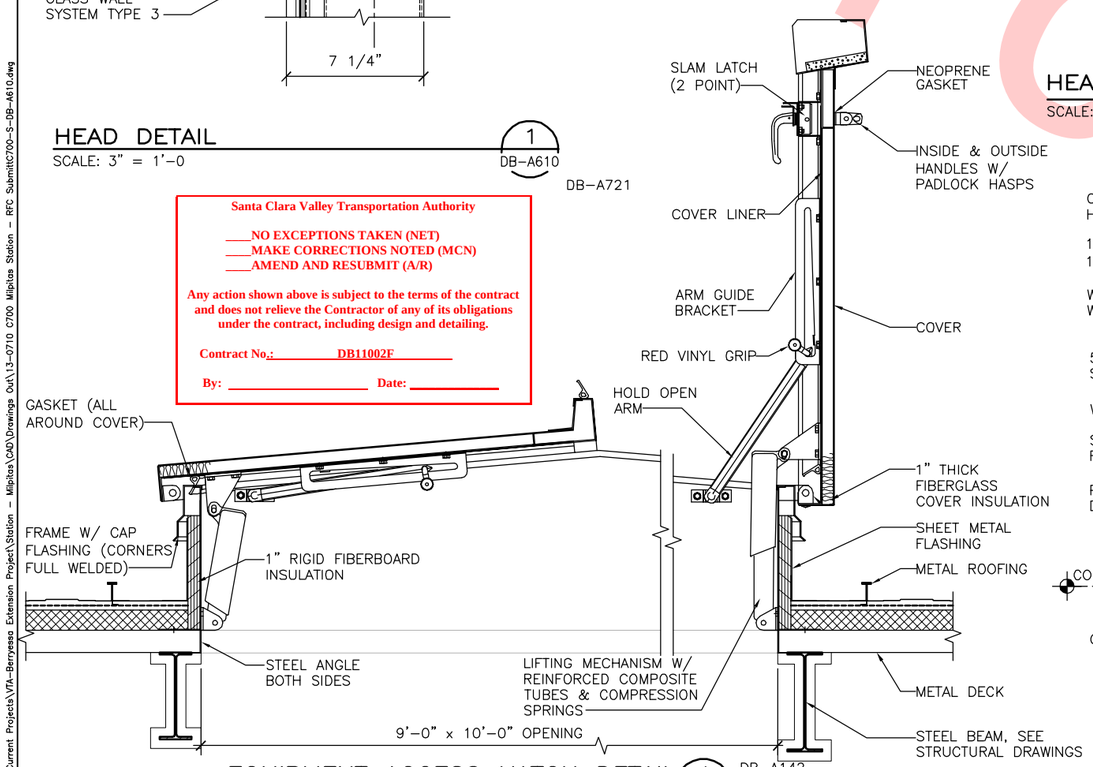

EQUIPMENT ACCESS HATCH DETAIL (4 / DB-A610 DB-A142 DB-A143 DB-A144 DB-A145)
SCALE: 1" = 1'-0

HEAD DETAIL (1 / DB-A610 DB-A721)
SCALE: 3" = 1'-0

Santa Clara Valley Transportation Authority

____NO EXCEPTIONS TAKEN (NET)
____MAKE CORRECTIONS NOTED (MCN)
____AMEND AND RESUBMIT (A/R)

Any action shown above is subject to the terms of the contract and does not relieve the Contractor of any of its obligations under the contract, including design and detailing.

Contract No.: DB11002F

By: _____ Date: _____

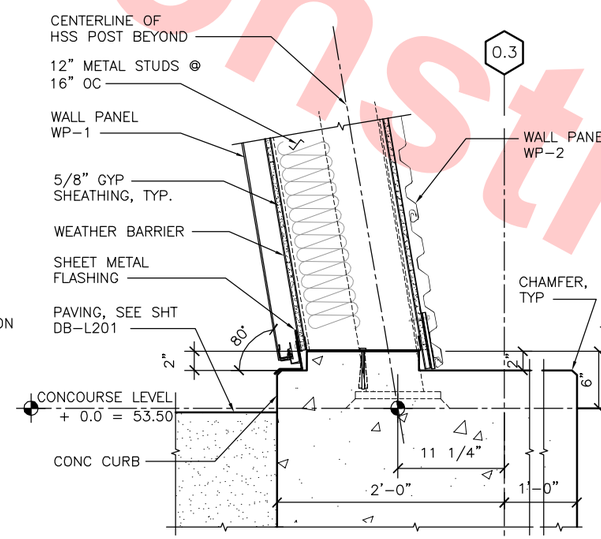

BASE DETAIL (5 / DB-A610 DB-A521)
SCALE: 1 1/2" = 1'-0

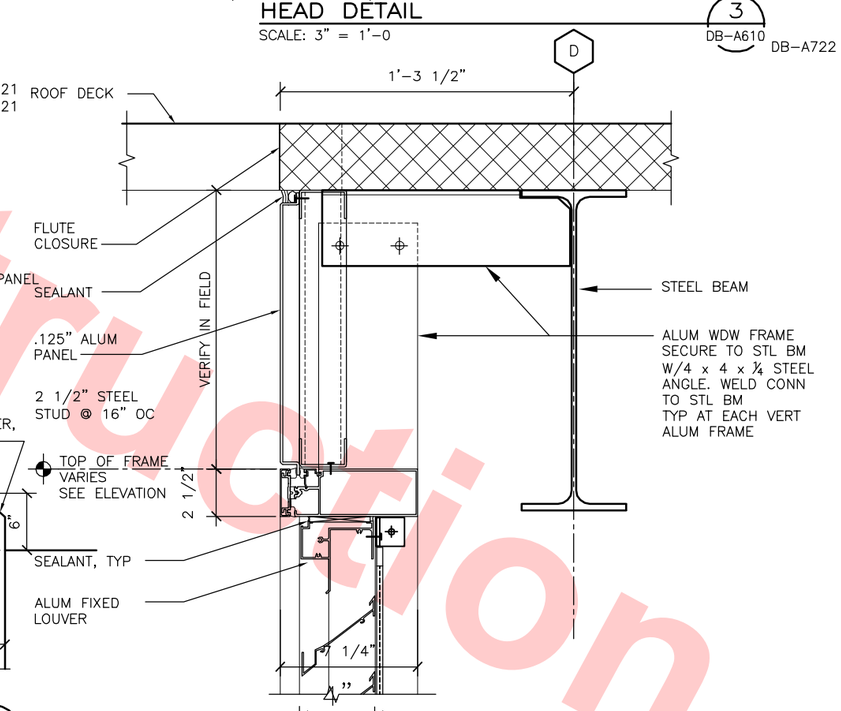

HEAD DETAIL (6 / DB-A610 DB-A526 DB-A721)
SCALE: 3" = 1'-0

Not For Construction

REV	DATE	BY	SUB	APP	DESCRIPTION
0	20130710				READINESS FOR CONSTRUCTION

DESIGNED BY S. DEBNATH
DRAWN BY RC/GP/EAB
CHECKED BY E. BALLADA
IN CHARGE R. BARLAAN
DATE 20130710

LICENSED ARCHITECT SOMESH DEBNATH No. C21523 STATE OF CALIFORNIA

Skanska Shimmick Herzog
1436 California Circle Milpitas, California 95035
A Joint Venture

Anil Verma Associates, Inc. 1970 Broadway, Suite 525 Oakland, CA 94612 Phone: (510) 835-2537 Fax: (510) 835-2339
SUBMITTED

Lockwood, Andrews & Newnam, Inc. A LEO A DALY COMPANY | T·Y·LIN INTERNATIONAL
APPROVED

VTA BART SILICON VALLEY
BART SILICON VALLEY BERRYESSA EXTENSION

LINE, TRACK, STATIONS AND SYSTEMS DESIGN UNIT 023
MILPITAS STATION
WALL DETAILS

CADD FILENAME C700-S-DB-A610.dwg
SIZE D | SCALE AS NOTED
CONTRACT NO. C700 | REV. 0
AREA CODE DB | SHEET NO. A610 | PAGE NO. 0498

JosephG Jun 26, 2013 – 3:14pm G:\Current Projects\VTA-Berryessa Extension Project\Station – Milpitas\CAD\Drawings Out\13-0710 C700 Milpitas Station – RFC Submit\C700-S-DB-A610.dwg

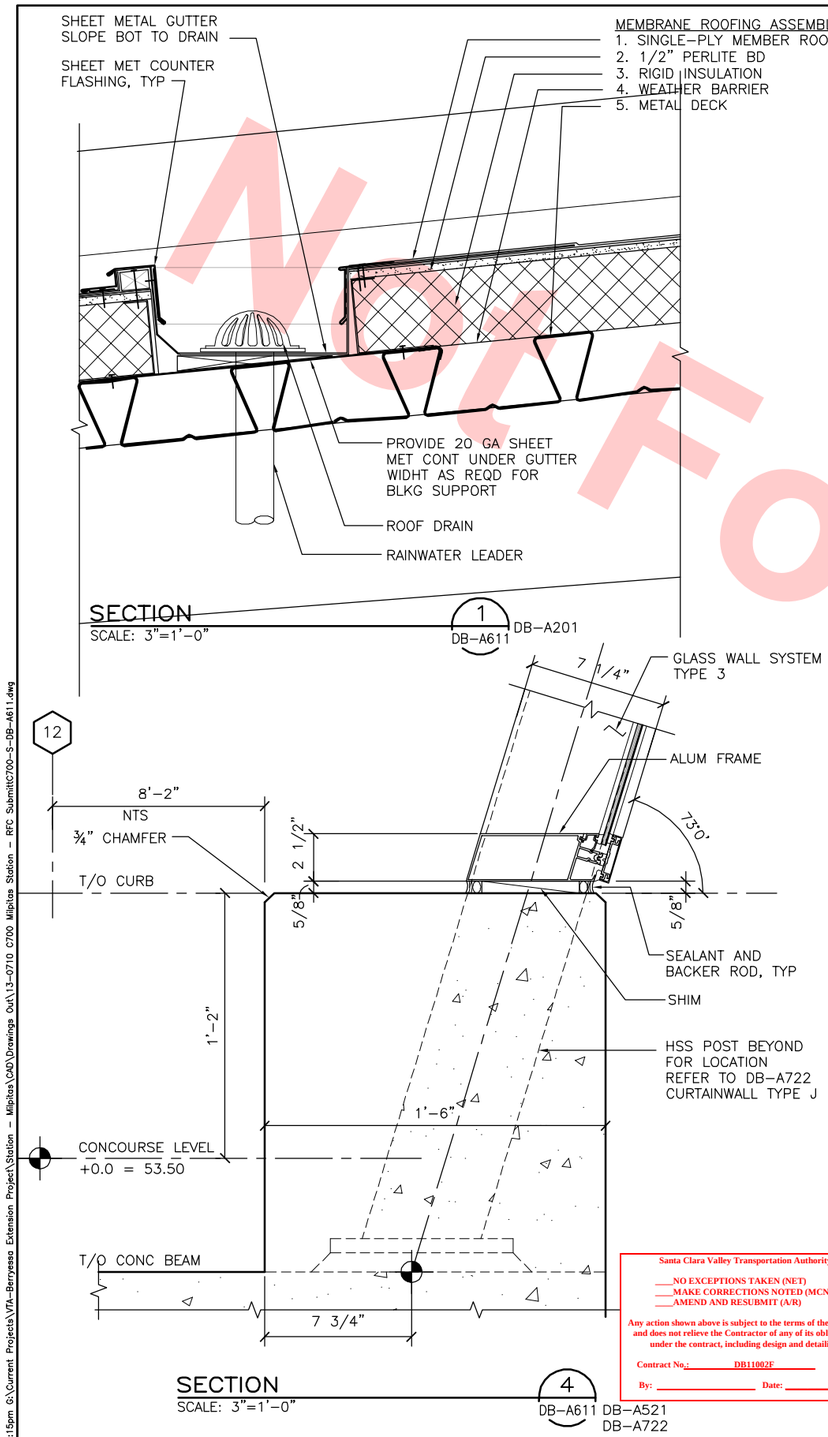

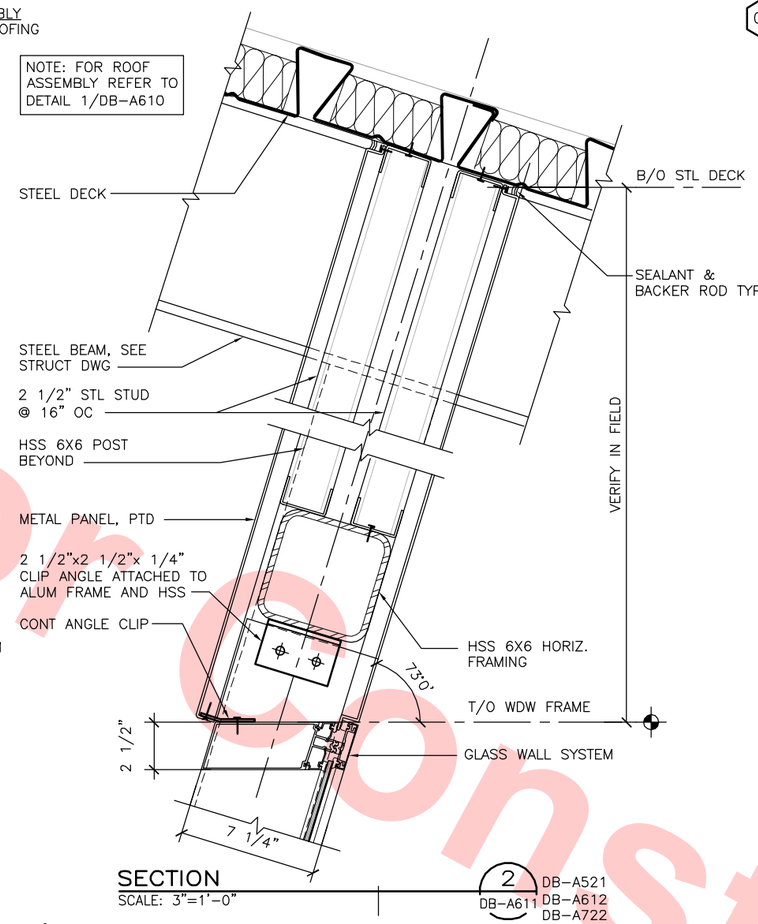

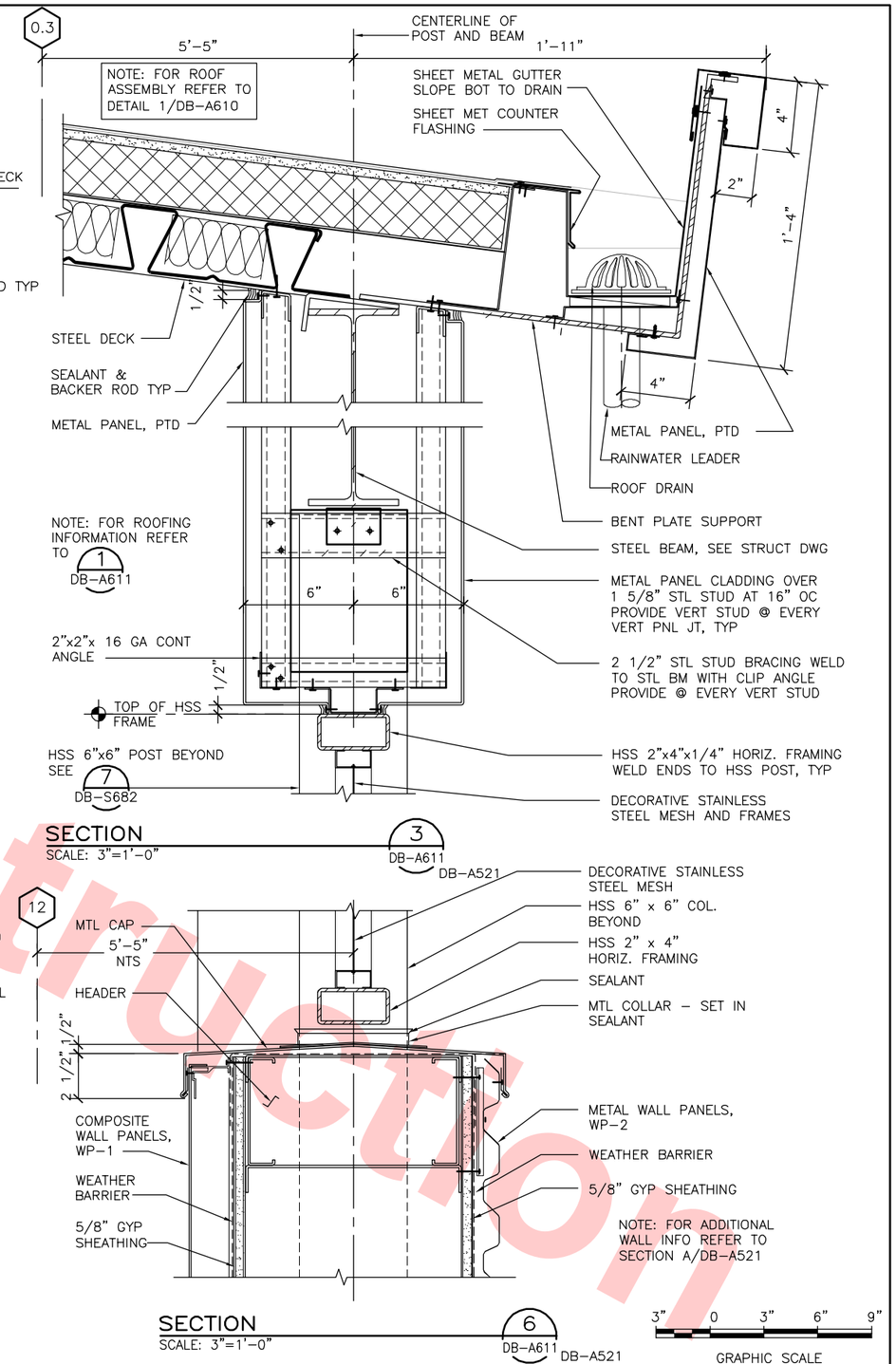

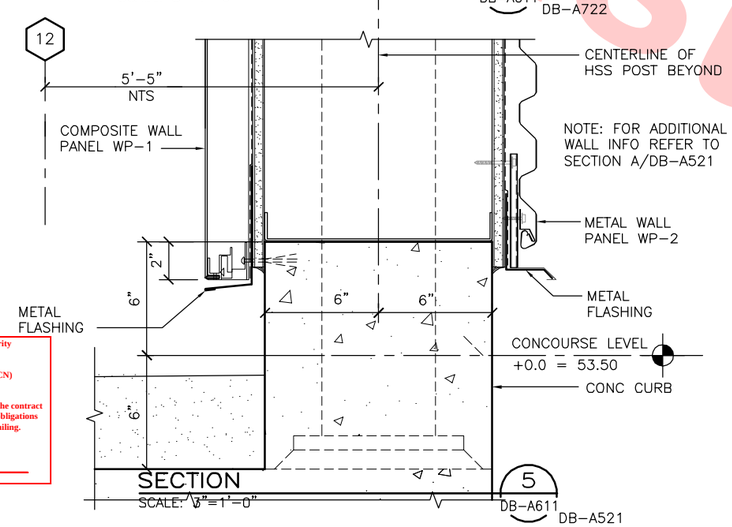

Santa Clara Valley Transportation Authority

____NO EXCEPTIONS TAKEN (NET)
____MAKE CORRECTIONS NOTED (MCN)
____AMEND AND RESUBMIT (A/R)

Any action shown above is subject to the terms of the contract and does not relieve the Contractor of any of its obligations under the contract, including design and detailing.

Contract No.: DB11002F

By: _____ Date: _____

REV	DATE	BY	SUB	APP	DESCRIPTION
0	20130710				READINESS FOR CONSTRUCTION

DESIGNED BY S. DEBNATH
DRAWN BY RC/GP/EAB
CHECKED BY E. BALLADA
IN CHARGE R. BARLAAN
DATE 20130710

LICENSED ARCHITECT SOMESH DEBNATH No. C21523 STATE OF CALIFORNIA

Skanska Shimmick Herzog
1436 California Circle
Milpitas, California 95035
A Joint Venture

Anil Verma Associates, Inc.
1970 Broadway, Suite 535 Oakland, CA 94612
Phone: (510) 835-2537 Fax: (510) 535-2339
SUBMITTED

Lockwood, Andrews & Newnam, Inc. A LAN & BALY COMPANY
T·Y·LIN INTERNATIONAL
APPROVED

VTA BART SILICON VALLEY
BART SILICON VALLEY BERRYESSA EXTENSION

LINE, TRACK, STATIONS AND SYSTEMS
DESIGN UNIT 023
MILPITAS STATION

ROOF AND WALL DETAILS

CADD FILENAME C700-S-DB-A611.dwg
SIZE D | SCALE 3"=1'-0"
CONTRACT NO. C700 | REV. 0
AREA CODE DB | SHEET NO. A611 | PAGE NO. 0499

Not For Construction

JosephG Jun 26, 2013 – 3:15pm G:\Current Projects\VTA-Berryessa Extension Project\Station – Milpitas\CAD\Drawings Out\13-0710 C700 Milpitas Station – RFC Submit\C700-S-DB-A611.dwg

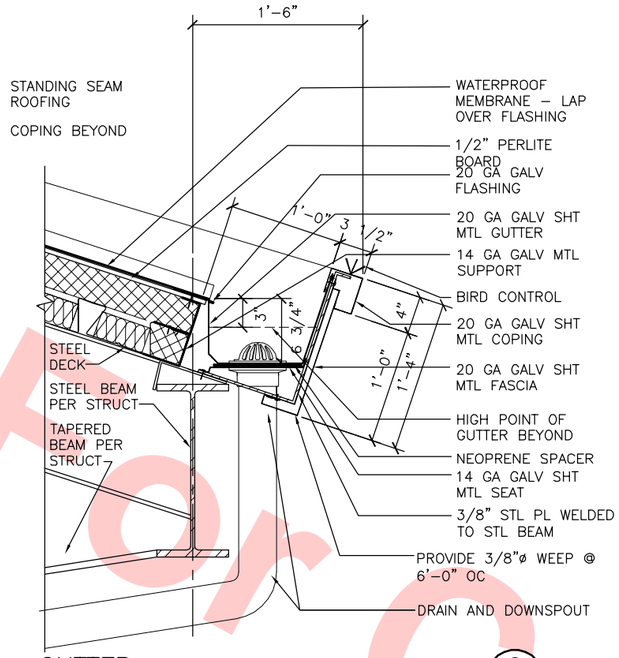

NOT USED 1 DB-A612 DB-AXXX
SCALE: 1 1/2" = 1'-0

GUTTER 2 DB-A612 DB-A522
SCALE: 1 1/2" = 1'-0

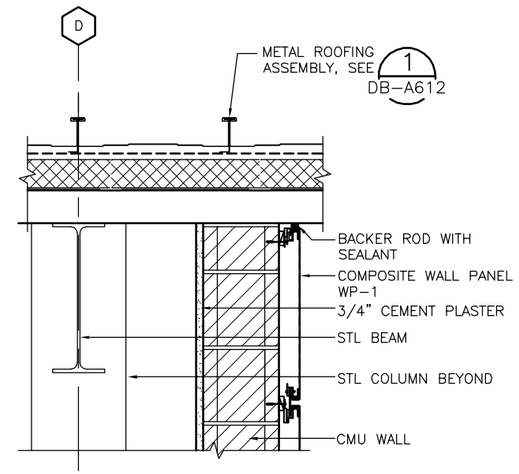

CMU 3 DB-A612 DB-A523
SCALE: 1 1/2" = 1'-0

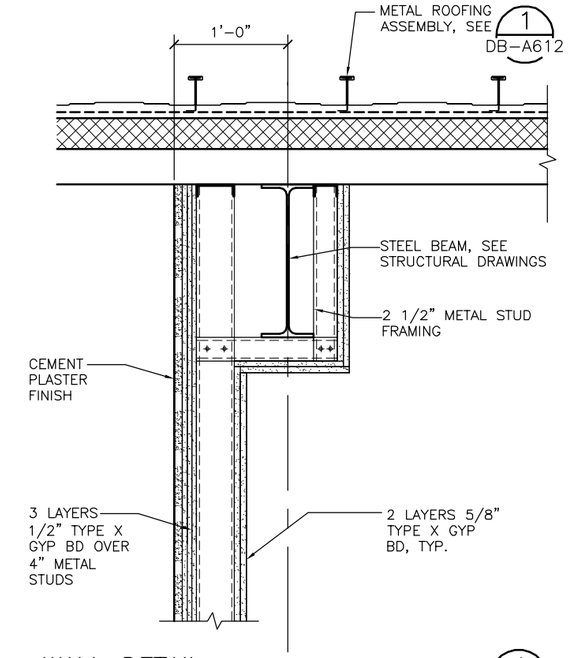

WALL DETAIL 4 DB-A612 DB-A526
SCALE: 1 1/2" = 1'-0

Santa Clara Valley Transportation Authority

____NO EXCEPTIONS TAKEN (NET)
____MAKE CORRECTIONS NOTED (MCN)
____AMEND AND RESUBMIT (A/R)

Any action shown above is subject to the terms of the contract and does not relieve the Contractor of any of its obligations under the contract, including design and detailing.

Contract No.: DB11002F

By: _____ Date: _____

NOT USED 5 DB-A612 DB-A522
SCALE: 1 1/2" = 1'-0

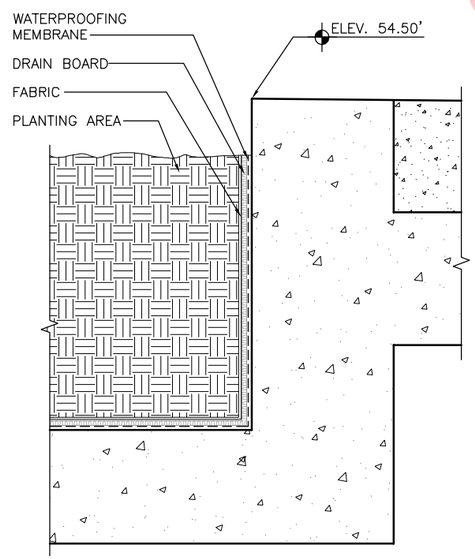

CONCRETE CURB 6 DB-A612 DB-A522
SCALE: 1 1/2" = 1'-0

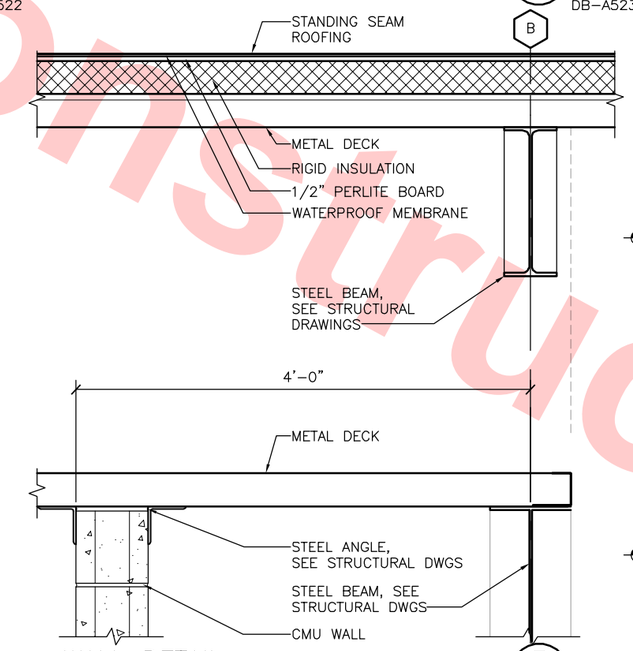

WALL DETAIL 7 DB-A612 DB-A526
SCALE: 1 1/2" = 1'-0

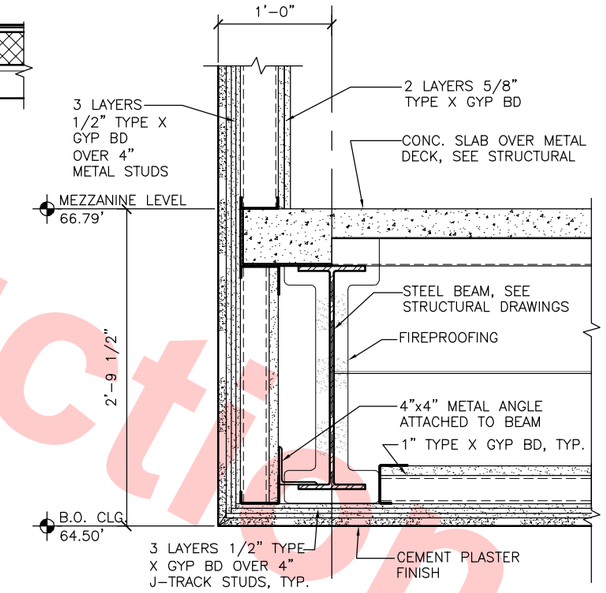

WALL DETAIL 8 DB-A612 DB-A526
SCALE: 1 1/2" = 1'-0

Not For Construction

REV	DATE	BY	SUB	APP	DESCRIPTION
0	20130710				READINESS FOR CONSTRUCTION

DESIGNED BY S. DEBNATH
DRAWN BY R. COLLADO
CHECKED BY E. BALLADA
IN CHARGE R. BARLAAN
DATE 20130710

LICENSED ARCHITECT SOMESH DEBNATH No. C21523 STATE OF CALIFORNIA

Skanska Shimmick Herzog
1436 California Circle
Milpitas, California 95035
A Joint Venture

Anil Verma Associates, Inc.
1970 Broadway, Suite 525 Oakland, CA 94612
Phone: (510) 835-2537 Fax: (510) 835-2339
SUBMITTED

Lockwood, Andrews & Newnam, Inc. A LAN & RAIN COMPANY
T·Y·LIN INTERNATIONAL
APPROVED

VTA BART SILICON VALLEY
BART SILICON VALLEY BERRYESSA EXTENSION

LINE, TRACK, STATIONS AND SYSTEMS DESIGN UNIT 023
MILPITAS STATION
ROOF AND WALL DETAILS

CADD FILENAME C700-S-DB-A612.dwg
SIZE D | SCALE 1 1/2"=1'-0"
CONTRACT NO. C700 | REV. 0
AREA CODE DB | SHEET NO. A612 | PAGE NO. 0500

JosephG Jun 26, 2013 – 3:16pm G:\Current Projects\VTA-Berryessa Extension Project\Station – Milpitas\CAD\Drawings Out\13-0710 C700 Milpitas Station – RFC Submit\C700-S-DB-A612.dwg

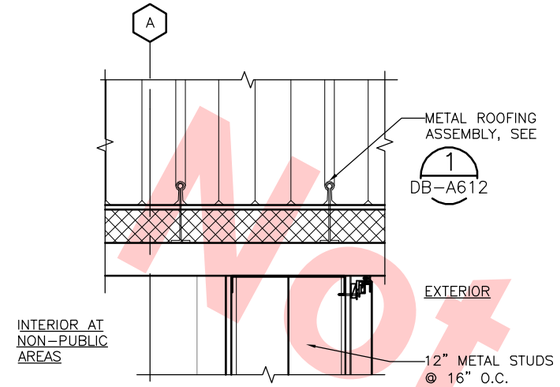

METAL PANEL 1 DB-A613 DB-A523
SCALE: 1-1/2" = 1'-0

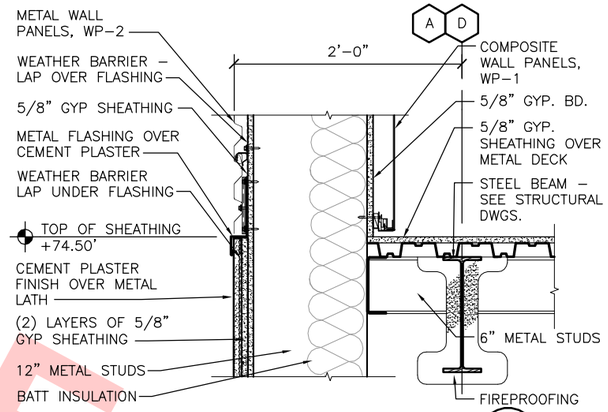

WALL TRANSITION 2 DB-A613 DB-A527
SCALE: 1-1/2" = 1'-0

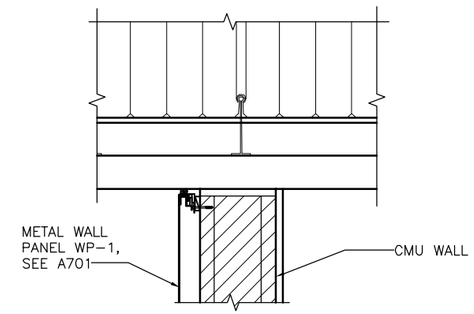

METAL PANEL 3 DB-A613 DB-A523
SCALE: 1-1/2" = 1'-0

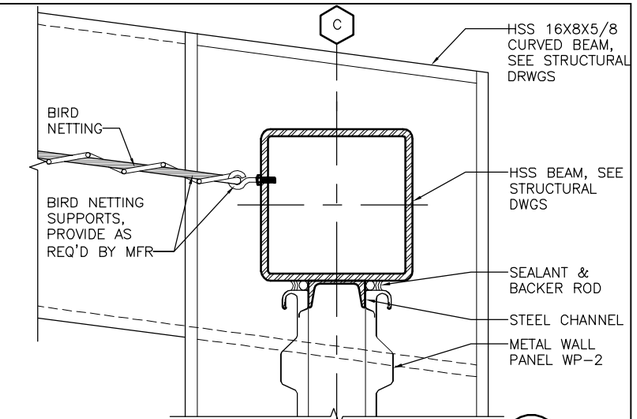

METAL PANEL 4 DB-A613 DB-A527
SCALE: 1-1/2" = 1'-0

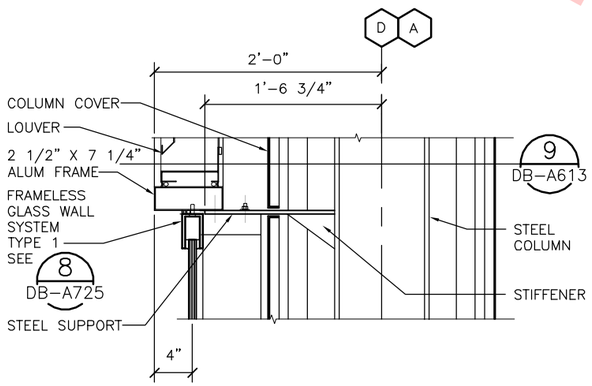

GLASS WALL SYSTEM SUPPORT 5 DB-A613
SCALE: 1-1/2" = 1'-0

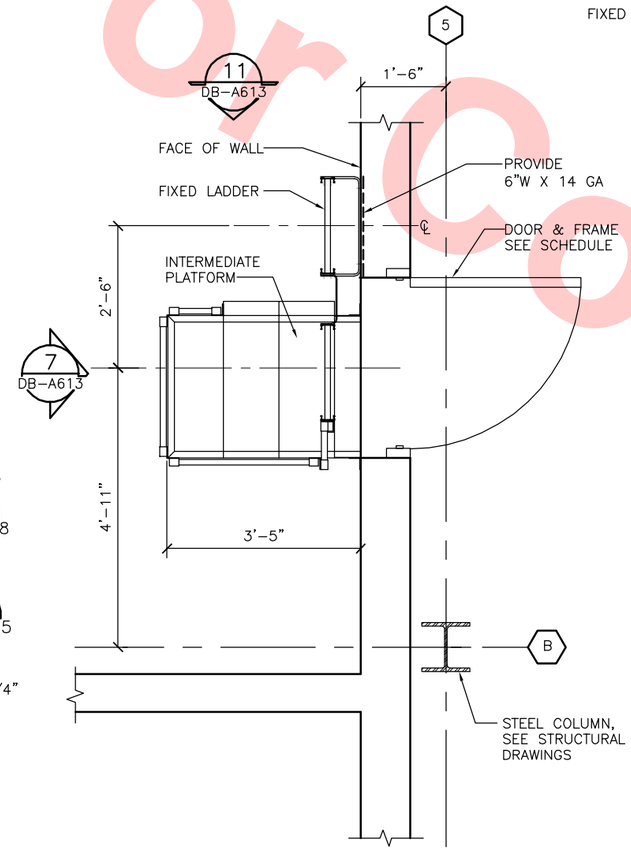

FIXED LADDER – MEZZ. LEVEL 10 DB-A613 DB-A122X DB-A133
SCALE: 1-1/2" = 1'-0

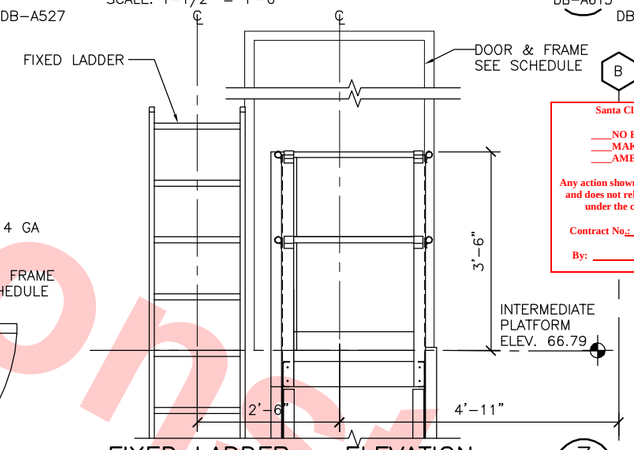

FIXED LADDER – ELEVATION 7 DB-A613
SCALE: 1-1/2" = 1'-0

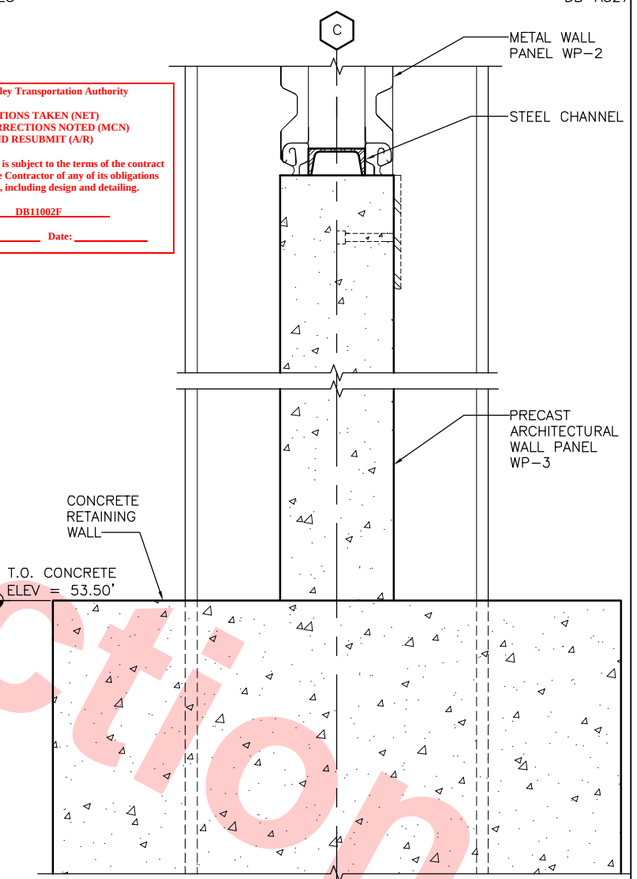

METAL PANEL 12 DB-A613 DB-A527
SCALE: 1-1/2" = 1'-0

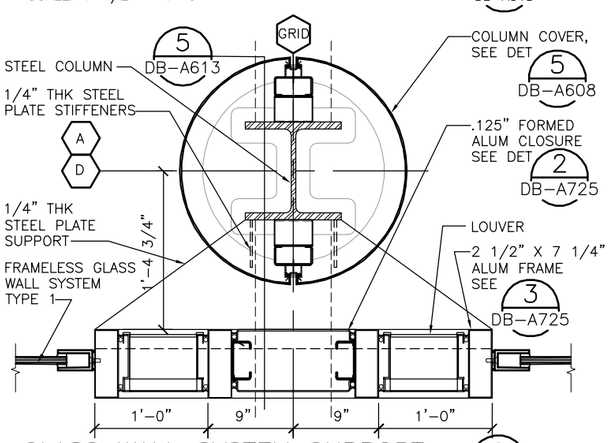

GLASS WALL SYSTEM SUPPORT 9 DB-A613 DB-A721
SCALE: 1-1/2" = 1'-0

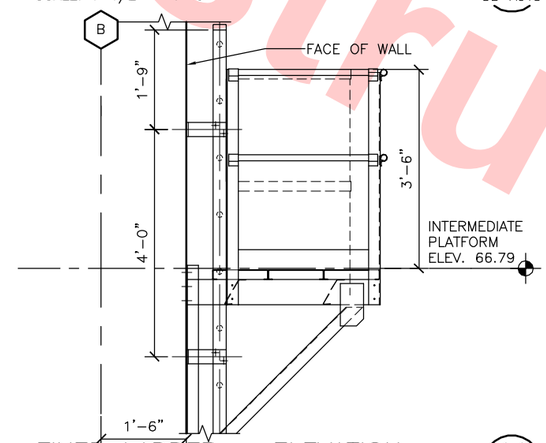

FIXED LADDER – ELEVATION 11 DB-A613
SCALE: 1-1/2" = 1'-0

Santa Clara Valley Transportation Authority

___NO EXCEPTIONS TAKEN (NET)
___MAKE CORRECTIONS NOTED (MCN)
___AMEND AND RESUBMIT (A/R)

Any action shown above is subject to the terms of the contract and does not relieve the Contractor of any of its obligations under the contract, including design and detailing.

Contract No.: DB11002F

By: _____ Date: _____

Not For Construction

REV	DATE	BY	SUB	APP	DESCRIPTION
0	20130710				READINESS FOR CONSTRUCTION

DESIGNED BY S. DEBNATH
DRAWN BY R. COLLADO
CHECKED BY E. BALLADA
IN CHARGE R. BARLAAN
DATE 20130710

LICENSED ARCHITECT SAMESH DEBNATH No. C21523 STATE OF CALIFORNIA

Skanska Shimmick Herzog
1436 California Circle Milpitas, California 95035
A Joint Venture

Anil Verma Associates, Inc. 1970 Broadway, Suite 525 Oakland, CA 94612 Phone: (510) 835-2537 Fax: (510) 835-2339
SUBMITTED

Lockwood, Andrews & Newnam, Inc. A LAN & RAIN COMPANY | T·Y·LIN INTERNATIONAL
APPROVED

VTA BART SILICON VALLEY
BART SILICON VALLEY BERRYESSA EXTENSION

LINE, TRACK, STATIONS AND SYSTEMS
DESIGN UNIT 023
MILPITAS STATION

WALL DETAILS

CADD FILENAME C700-S-DB-A613.dwg
SIZE D | SCALE 1 1/2"=1'-0"
CONTRACT NO. C700 | REV. 0
AREA CODE DB | SHEET NO. A613 | PAGE NO. 0501

JosephG Jun 26, 2013 – 3:17pm G:\Current Projects\VTA-Berryessa Extension Project\Station – Milpitas\CAD\Drawings Out\13-0710 C700 Milpitas Station – RFC Submit\C700-S-DB-A613.dwg

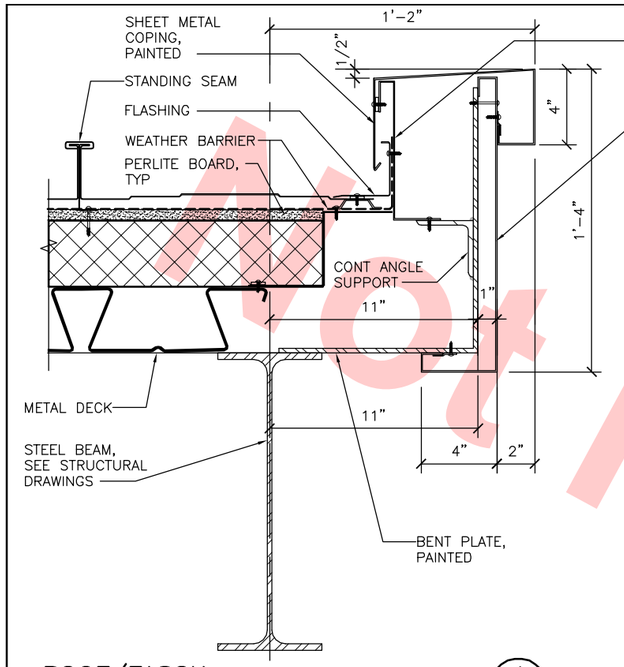

ROOF/FASCIA 1 DB-A614 DB-A526
SCALE: 3" = 1'-0

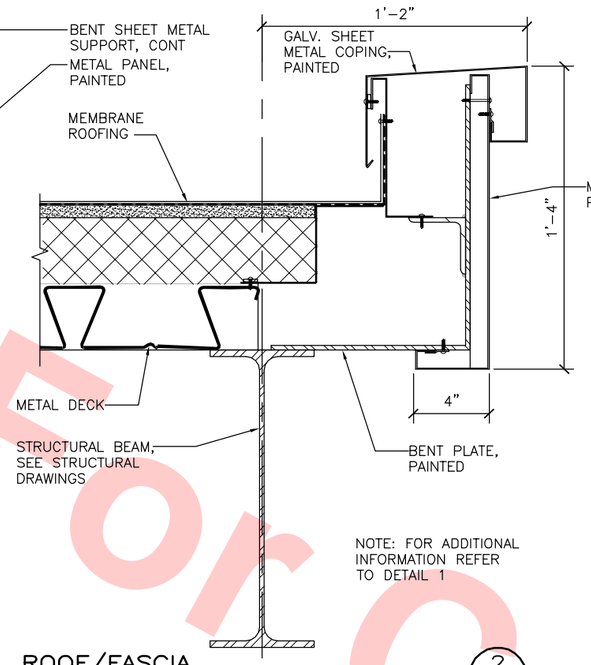

NOTE: FOR ADDITIONAL INFORMATION REFER TO DETAIL 1

ROOF/FASCIA 2 DB-A614 DB-A526
SCALE: 3" = 1'-0

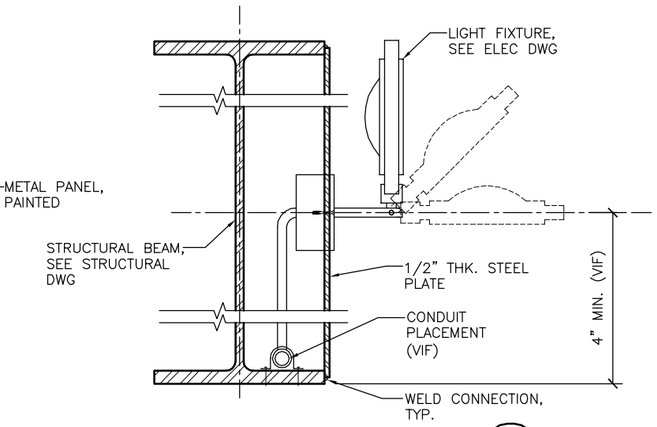

LIGHT FIXTURE MOUNT 3 DB-A614 DB-A421 DB-A422 DB-A423 DB-A424
SCALE: 3" = 1'-0

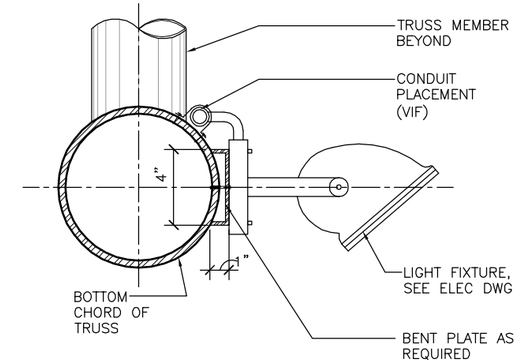

LIGHT FIXTURE MOUNT 4 DB-A614 DB-A421 DB-A422 DB-A423 DB-A424
SCALE: 3" = 1'-0

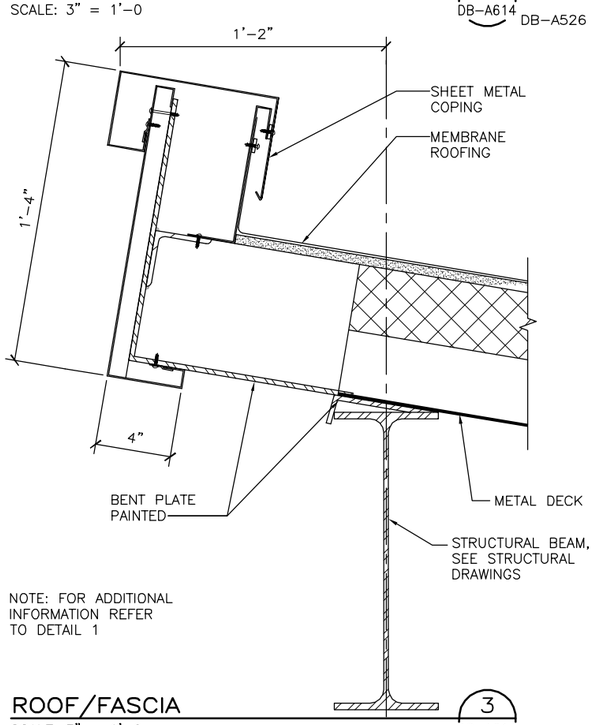

NOTE: FOR ADDITIONAL INFORMATION REFER TO DETAIL 1

ROOF/FASCIA 3 DB-A614 DB-A301
SCALE: 3" = 1'-0

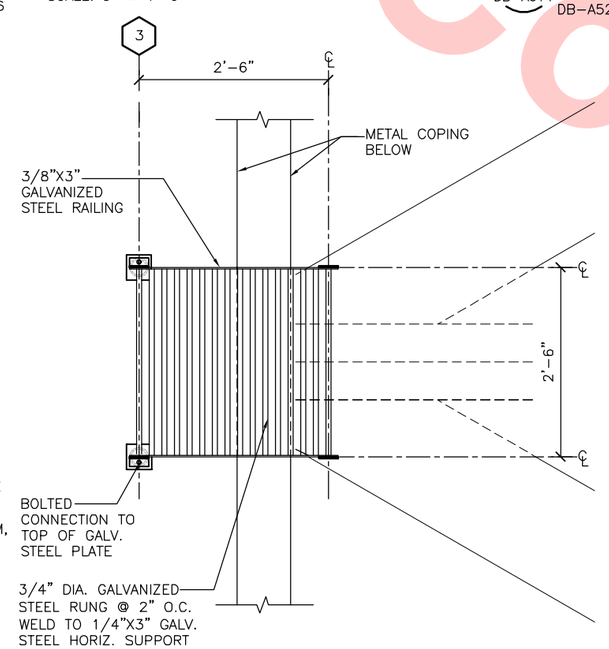

FIXED LADDER – PLAN 4 DB-A614 DB-A141
SCALE: 1" = 1'-0

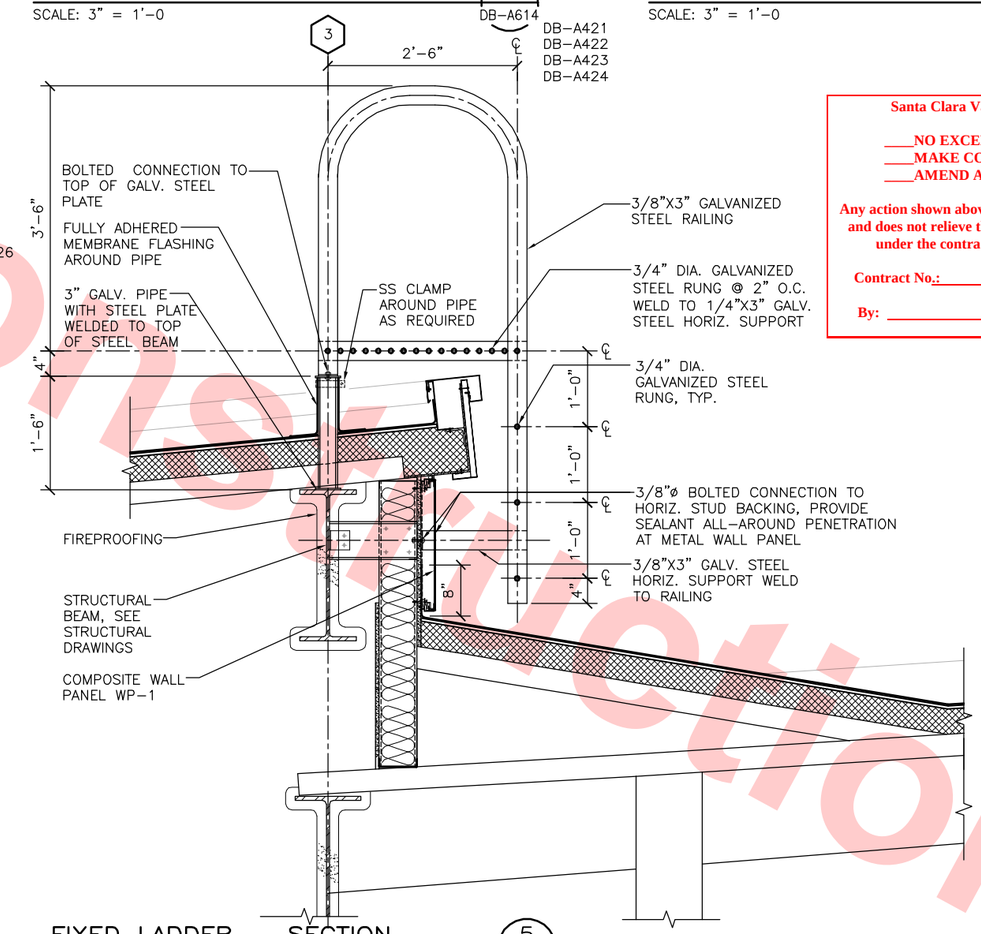

FIXED LADDER – SECTION 5 DB-A614 DB-A201
SCALE: 1" = 1'-0

Santa Clara Valley Transportation Authority

____NO EXCEPTIONS TAKEN (NET)
____MAKE CORRECTIONS NOTED (MCN)
____AMEND AND RESUBMIT (A/R)

Any action shown above is subject to the terms of the contract and does not relieve the Contractor of any of its obligations under the contract, including design and detailing.

Contract No.: DB11002F

By: _____ **Date:** _____

Not For Construction

REV	DATE	BY	SUB	APP	DESCRIPTION
0	20130710				READINESS FOR CONSTRUCTION

DESIGNED BY S. DEBNATH
DRAWN BY R. C. / PPB
CHECKED BY E. BALLADA
IN CHARGE R. BARLAAN
DATE 20130710

LICENSED ARCHITECT SOMESH DEBNATH No. C21523 STATE OF CALIFORNIA

Skanska Shimmick Herzog
1436 California Circle
Milpitas, California 95035
A Joint Venture

Anil Verma Associates, Inc.
1970 Broadway, Suite 525 Oakland, CA 94612
Phone: (510) 835-2537 Fax: (510) 535-2339
SUBMITTED

Lockwood, Andrews & Newnam, Inc. A LAN & BALY COMPANY
T·Y·LIN INTERNATIONAL
APPROVED

VTA BART SILICON VALLEY
BART SILICON VALLEY BERRYESSA EXTENSION

LINE, TRACK, STATIONS AND SYSTEMS
DESIGN UNIT 023
MILPITAS STATION

ROOF AND WALL DETAILS

CADD FILENAME C700-S-DB-A614.dwg
SIZE D | SCALE 3"=1'-0"
CONTRACT NO. C700 | REV. 0
AREA CODE DB | SHEET NO. A614 | PAGE NO. 0502

JosephG Jun 26, 2013 – 3:18pm G:\Current Projects\VTA-Berryessa Extension Project\Station – Milpitas\CAD\Drawings Out\13-0710 C700 Milpitas Station – RFC Submit\C700-S-DB-A614.dwg

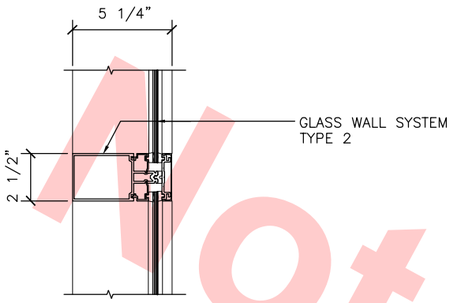

HORIZONTAL MULLION (1 / DB-A615 / DB-A722)
SCALE: 1 1/2"=1'-0"

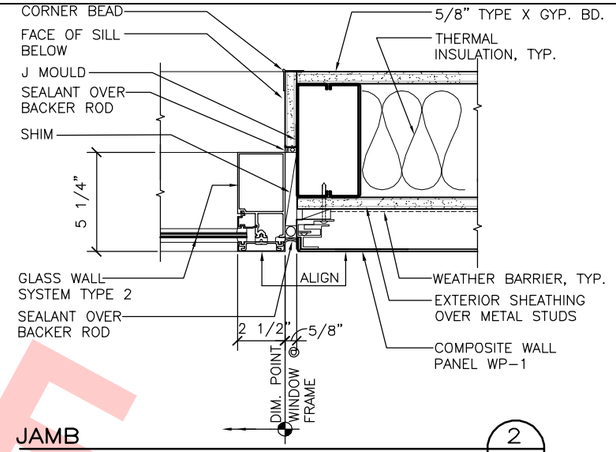

JAMB (2 / DB-A615 / DB-A722)
SCALE: 1 1/2"=1'-0"

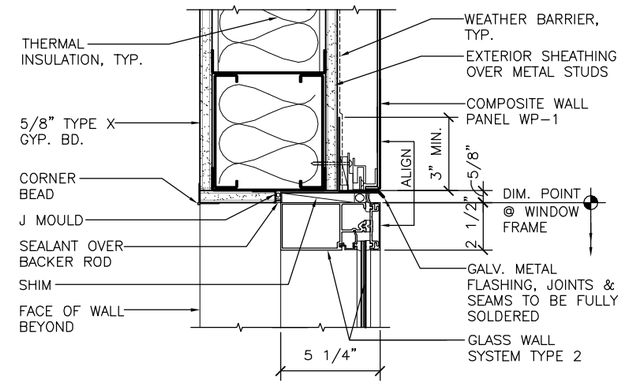

HEAD (3 / DB-A615 / DB-A722)
SCALE: 1 1/2"=1'-0"

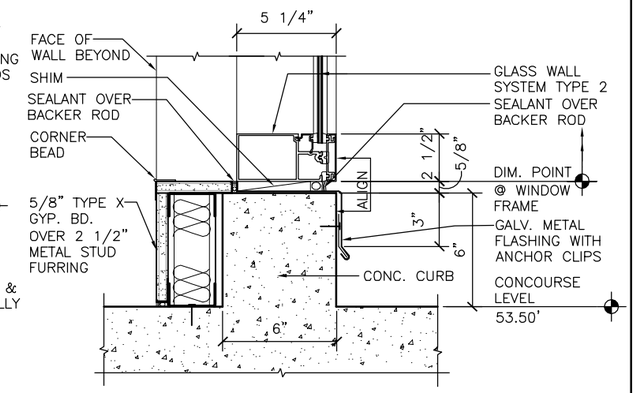

SILL (4 / DB-A615 / DB-A722)
SCALE: 1 1/2"=1'-0"

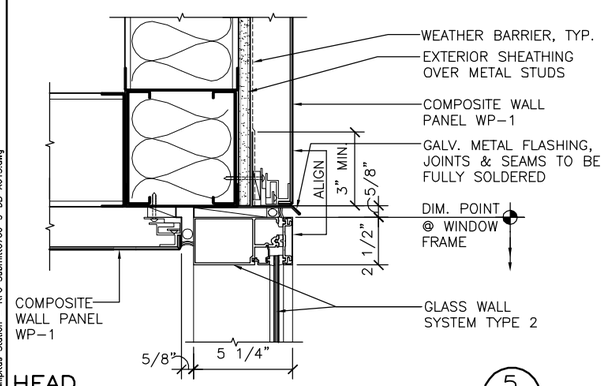

HEAD (5 / DB-A615 / DB-A722)
SCALE: 1 1/2"=1'-0"

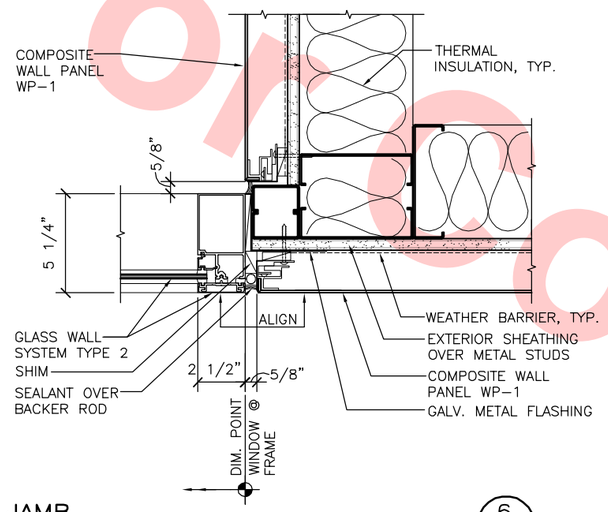

JAMB (6 / DB-A615 / DB-A722)
SCALE: 1 1/2"=1'-0"

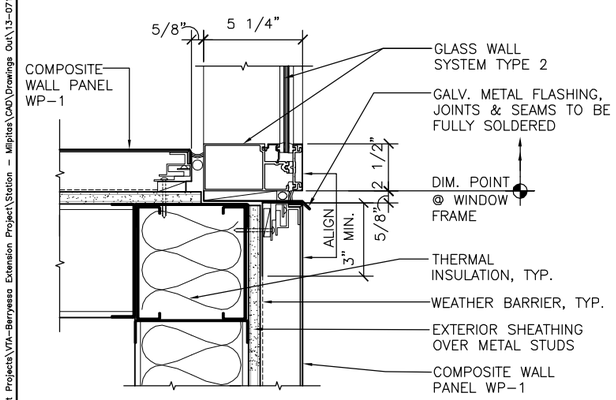

SILL (9 / DB-A615 / DB-A722)
SCALE: 1 1/2"=1'-0"

Not For Construction

Santa Clara Valley Transportation Authority

____NO EXCEPTIONS TAKEN (NET)
____MAKE CORRECTIONS NOTED (MCN)
____AMEND AND RESUBMIT (A/R)

Any action shown above is subject to the terms of the contract and does not relieve the Contractor of any of its obligations under the contract, including design and detailing.

Contract No.: DB11002F

By: _____ Date: _____

REV	DATE	BY	SUB	APP	DESCRIPTION
0	20130710				READINESS FOR CONSTRUCTION

DESIGNED BY S. DEBNATH
DRAWN BY P. BALOGO
CHECKED BY E. BALLADA
IN CHARGE R. BARLAAN
DATE 20130710

LICENSED ARCHITECT SOMESH DEBNATH No. C21523 STATE OF CALIFORNIA

Skanska Shimmick Herzog
1436 California Circle
Milpitas, California 95035
A Joint Venture

Anil Verma Associates, Inc.
1970 Broadway, Suite 325 Oakland, CA 94612
Phone: (510) 835-2537 Fax: (510) 835-2339
SUBMITTED

Lockwood, Andrews & Newnam, Inc. A LEO A DALY COMPANY
T·Y·LIN INTERNATIONAL
APPROVED

VTA BART SILICON VALLEY
BART SILICON VALLEY BERRYESSA EXTENSION

LINE, TRACK, STATIONS AND SYSTEMS
MILPITAS STATION

POC WINDOW DETAILS

CADD FILENAME C700-S-DB-A615.dwg
SIZE D | SCALE 1 1/2"=1'-0"
CONTRACT NO. C700 | REV. 0
AREA CODE DB | SHEET NO. A615 | PAGE NO. 0503

JosephG Jul 02, 2013 - 2:09pm G:\Current Projects\VTA-Berryessa Extension Project\Station - Milpitas\CAD\Drawings Out\13-0710 C700 Milpitas Station - RFC Submittl\C700-S-DB-A615.dwg

INTERIOR FINISH SCHEDULE

AREA	ROOM NO	ROOM NAME	REFERENCE SHEET NO.	FLOOR (NOTE 2,6,7,8)			WALL (NOTE 1,4,5)								WAINSCOT								CEILING		SOFFIT		REMARK(S)
				SUB	FIN	BASE	NORTH		EAST		SOUTH		WEST		NORTH		EAST		SOUTH		WEST						
							MAT	FIN	MAT	FIN	MAT	FIN	MAT	FIN	MAT	FIN	MAT	FIN	MAT	FIN	MAT	FIN	MAT	FIN	MAT	FIN	
STATION PLATFORM	P01	STAIR #11	DB-A116X	CONC	CI-1	–	CMU/CP	P-3	CMU	–	CONC	–	CONC	–	–	–	–	–	–	–	–	–	EXP	P-3	–	–	
	P03	UTILITY ROOM #7	DB-A116X	CONC	EX-1	EX-1	CONC	–	CMU	–	CMU	–	CONC	–	–	–	–	–	–	–	–	–	EXP	P-3	–	–	
	P05	PLATFORM #1	DB-A116X	CONC	T-6/7/8	–	T-9/10/11/12/13, SEE A501-A505								–	–	–	–	–	–	–	–	CG-1	–	–	–	STAIR#1,#3: CI-1; NOTE A, F
	P07	ESCALATOR CONTROL RM #3	DB-A113X	CONC	SLR	RB-1	GB	P-3	CMU	–	GB	P-3	CONC	–	–	–	–	–	–	–	–	–	EXP	P-3	–	–	
	P09	COMM TERM #3	DB-A113X	CONC	SLR	RB-1	CMU	–	CMU	–	GB	P-3	CONC	–	–	–	–	–	–	–	–	–	EXP	P-3	–	–	
	P11	UTILITY RM #1	DB-A111X	CONC	EX-1	EX-1	CMU	–	CMU	–	CMU	–	CONC	–	–	–	–	–	–	–	–	–	EXP	P-3	–	–	
	P13	ELEV MACH #1	DB-A112X	CONC	SLR	RB-1	GB	P-3	CMU	–	CMU	–	CONC	–	–	–	–	–	–	–	–	–	EXP	P-3	–	–	
	P15	MECHANICAL RM #1	DB-A112X	CONC	SLR	RB-1	GB	P-3	CMU	–	GB	P-3	CONC	–	–	–	–	–	–	–	–	–	EXP	P-3	–	–	
	P17	ELEC RM #3	DB-A112X	CONC	SLR	RB-1	GB	P-3	CMU	–	GB	P-3	CONC	–	–	–	–	–	–	–	–	–	EXP	P-3	–	–	
	P19	FIRE DEPT STORAGE #1	DB-A112X	CONC	SLR	RB-1	GB	P-3	CMU	–	GB	P-3	CONC	–	–	–	–	–	–	–	–	–	EXP	P-3	–	–	
	P21	SYSTEMS SERVICE STORAGE#1	DB-A112X	CONC	SLR	RB-1	GB	P-3	CMU	–	GB	P-3	CONC	–	–	–	–	–	–	–	–	–	EXP	P-3	–	–	
	P23	ESCALATOR CONTROL RM #1	DB-A112X	CONC	SLR	RB-1	GB	P-3	CMU	–	GB	P-3	CONC	–	–	–	–	–	–	–	–	–	EXP	P-3	–	–	
	P25	UTILITY CHASE ACCESS #1	DB-A111X	CONC	SLR	–	GB	P-3	CMU	–	GB	P-3	CONC	–	–	–	–	–	–	–	–	–	EXP	P-3	–	–	
	P27	STAIR #5	DB-A111X	CONC	CI-1	RB-1	CONC	–	CONC	–	CONC, CMU/CP	–	CONC	–	–	–	–	–	–	–	–	–	EXP	P-3	–	–	
	P29	STAIR #3	DB-A114X	CONC	CI-1	RB-1	GB	P-3	CMU	–	CONC/ MET	–	CONC/ MET	–	–	–	–	–	–	–	–	–	EXP	P-3	–	–	
	P31	UTILITY RM #3	DB-A112X	CONC	EX-1	EX-1	CMU	–	CMU	–	CMU	–	CONC	–	–	–	–	–	–	–	–	–	EXP	P-3	–	–	
	P33	UTILITY RM #5	DB-A113X	CONC	EX-1	EX-1	CMU	–	CMU	–	CMU	–	CONC	–	–	–	–	–	–	–	–	–	EXP	P-3	–	–	
	P35	STAIR #1	DB-A112X	CONC	CI-1	RB-1	CONC	–	CMU	–	GB	P-3	CONC	–	–	–	–	–	–	–	–	–	EXP	P-3	–	–	
	P02	STAIR #12	DB-A116X	CONC	CI-1	RB-1	CMU/CP	–	CONC	–	CONC	–	CMU	–	–	–	–	–	–	–	–	–	EXP	P-3	–	–	
	P04	UTILITY ROOM #8	DB-A116X	CONC	EX-1	EX-1	CONC	–	CONC	–	CMU	–	CMU	–	–	–	–	–	–	–	–	–	EXP	P-3	–	–	
	P06	PLATFORM #2	DB-A116X	CONC	T-6/7/8	–	T-9/10/11/12/13, SEE A501-A505								–	–	–	–	–	–	–	–	CG-1	–	–	–	STAIR#2,#4: CI-1; NOTE A, F
	P08	ESCALATOR CONTROL RM #4	DB-A113X	CONC	SLR	RB-1	GB	P-3	CONC	–	GB	P-3	CMU	–	–	–	–	–	–	–	–	–	EXP	P-3	–	–	
	P10	COMM TERM RM #2	DB-A113X	CONC	SLR	RB-1	CMU	–	CONC	–	GB	P-3	CMU	–	–	–	–	–	–	–	–	–	EXP	P-3	–	–	
	P12	UTILITY RM #2	DB-A111X	CONC	EX-1	EX-1	CMU	–	CONC	–	CMU	–	CMU	–	–	–	–	–	–	–	–	–	EXP	P-3	–	–	
	P14	ELEVATOR MACH #2	DB-A112X	CONC	SLR	RB-1	GB	P-3	CONC	–	CMU	–	CMU	–	–	–	–	–	–	–	–	–	EXP	P-3	–	–	
	P16	MECHANICAL RM #2	DB-A112X	CONC	SLR	RB-1	GB	P-3	CONC	–	GB	P-3	CMU	–	–	–	–	–	–	–	–	–	EXP	P-3	–	–	
	P18	ELEC RM #4	DB-A112X	CONC	SLR	RB-1	GB	P-3	CONC	–	GB	P-3	CMU	–	–	–	–	–	–	–	–	–	EXP	P-3	–	–	
	P20	FIRE DEPT STORAGE #2	DB-A112X	CONC	SLR	RB-1	GB	P-3	CONC	–	GB	P-3	CMU	–	–	–	–	–	–	–	–	–	EXP	P-3	–	–	
	P22	SYSTEMS SERVICE STORAGE#2	DB-A112X	CONC	SLR	RB-1	GB	P-3	CONC	–	GB	P-3	CMU	–	–	–	–	–	–	–	–	–	EXP	P-3	–	–	
	P24	ESCALATOR CONTROL RM #2	DB-A112X	CONC	SLR	RB-1	GB	P-3	CONC	–	GB	P-3	CMU	–	–	–	–	–	–	–	–	–	EXP	P-3	–	–	
	P26	UTILITY CHASE ACCESS #2	DB-A111X	CONC	SLR	–	GB	P-3	CONC	–	GB	P-3	CMU	–	–	–	–	–	–	–	–	–	EXP	–	–	–	
	P28	STAIR #6	DB-A111X	CONC	CI-1	RB-1	CONC	–	CONC	–	CONC, CMU/CP	–	CONC	–	–	–	–	–	–	–	–	–	EXP	P-3	–	–	
	P30	STAIR #4	DB-A114X	CONC	CI-1	RB-1	GB	P-3	CONC/ MET	–	CONC/ MET	–	CMU	–	–	–	–	–	–	–	–	–	EXP	P-3	–	–	
	P32	UTILITY RM #4	DB-A112X	CONC	EX-1	EX-1	CMU	–	CONC	–	CMU	–	CMU	–	–	–	–	–	–	–	–	–	EXP	P-3	–	–	
	P34	UTILITY RM #6	DB-A113X	CONC	EX-1	EX-1	GB	P-3	CONC	–	GB	P-3	CMU	–	–	–	–	–	–	–	–	–	EXP	P-3	–	–	
	P36	STAIR #2	DB-A112X	CONC	CI-1	RB-1	CONC	–	CONC	–	GB	P-3	CMU	–	–	–	–	–	–	–	–	–	EXP	P-3	–	–	

FINISH NOTES

1. ALL CMU AND CONCRETE WALLS AND CEILINGS SHALL RECEIVE A TRANSPARENT SEALER PRIOR TO PAINTING.
2. PROVIDE TACTILE TILES AND DIRECTIONAL TILES AS INDICATED ON FLOOR PATTERN PLANS.
3. RUBBER BASE SHALL BE INSTALLED ON GYPSUM BOARD WALLS ONLY, U.O.N. ON SCHEDULE.
4. PLATFORM "WALLS" REFER TO THE FINISHES ON THE EXTERIOR FACE OF WALLS SURROUNDING ROOMS LOCATED AT THE UNDERSIDE OF STAIRS AND ESCALATORS, AND AT FULL HEIGHT SHAFT PARTITIONS.
5. ALL WALL FINISHES ARE TO BE TO CEILING WHERE OCCURS, OR TO UNDERSIDE OF METAL DECK WHEN STRUCTURE IS EXPOSED.
6. SEE FLOOR PATTERN PLANS A450 TO A465 FOR LAYOUT OF FLOOR FINISHES.
7. ALL FLOOR SURFACES SHALL BE NON-SLIP.
8. TRANSITIONS BETWEEN DISSIMILAR FLOOR MATERIALS SHALL OCCUR AT CENTERLINE OF DOOR.
9. SEE "OTHER FINISHES" FOR FINISHES OF ELEMENTS NOT SHOWN ON SCHEDULE.

NOTE:
1. SEE DWG. DB-A703 FOR GLAZING SCHEDULE

OTHER FINISHES:
A. SMOKE DRAFT WALLS AT STAIRS AND ESCALATORS: TILE T-9.
B. GRILLES AND DIFFUSERS: PAINT TO MATCH ADJACENT WALL OR CEILING COLOR.
C. CURTAIN WALL SYSTEMS: FINISH TO MATCH WP-1.
D. EXPOSED METAL COLUMNS, BEAMS, TRUSSES, DIAGONAL BRACES: PAINT P-1.
E. CEMENT PLASTER FINISHES ON BOTH SIDES OF WALLS SURROUNDING CONCOURSE FLOOR OPENINGS: PAINT P-2.
F. EXPOSED CONCRETE ARCHES AND COLUMNS: PAINT P-2.
G. ACOUSTICAL CEILING TILES: WHITE.
H. LOUVERS AROUND SKYLIGHTS: PAINT P-2.
I. LOUVERS ON EXTERIOR WALL: PAINT P-1.

FINISH CODE

CODE	MANUFACTURER	STYLE	COLOR/SIZE	NO.
PAINT (INTERIOR & EXTERIOR)				
P-1	BENJAMIN MOORE	–	PLATINUM GRAY	EXT. RM
P-2	BENJAMIN MOORE	–	HARBOR GRAY	AC-25
P-3	BENJAMIN MOORE	–	WHITE	INT-RM
WALL PANELS				
WP-1 WP-1A	REYNOBOND	COLORWELD 500	BRIGHT SILVER METALLIC PEWTER	
WP-2	CENTRIA	CONCEPT CS-660	*	
WP-3	PRE-CAST ARCHITECTURAL CONCRETE- PROVIDE GRAFFITI-RESISTANT COATINGS- SEE SPECIFICATION SECTION 09 96 33			NATURAL
TILE				
T-1	WAUSAU	TERRAZZO TILES	TZ 35 (24x24)	
T-2	WAUSAU	TERRAZZO TILES	WT2-774 (24x24)	
T-3	WAUSAU	TERRAZZO TILES	WT2-758 (24x24)	
T-4	CROSSVILLE	CROSS-COLORS	ANTICO TAUPE	B110
T-5	CROSSVILLE	CROSS-COLORS	TRUFFLE	A876
T-6	CERIM	AMBIENTE	ROCK (12x24)	
T-7	PASTORELLI	OPERA NATURAL	BOHEME (12x24)	
T-8	PASTORELLI	OPERA NATURAL	PARSIFAL (12x24)	
T-9	MIRAGE	PLAIN NATURAL	PURO 24"x24"(4.8mm)	PA07
T-10	MIRAGE	PLAIN NATURAL	PERLA 24"x24"(10mm)	PA03
T-11	MIRAGE	PLAIN NATURAL	CENERE 6"x24"(10mm)	PA02
T-12	MIRAGE	PLAIN NATURAL	NERO 24"x24"(10mm)	PA01
T-13	CROWN	METALIC GLAZES	BRONZE BLEND	STICKS MOSAIC
PLASTIC LAMINATE				
PL-1	FORMICA	NATURELLE FINISH	MILLENNIUM OAK	
INTEGRAL COLORED CONCRETE WITH TRANSPARENT SEALER				
CI-1	SOLOMON	INTEGRAL	SLATE	920
RUBBER BASE				
RB-1	ROPPE	114	LUNAR DUST	P193
RESILIENT TILE FLOORING				
RTF-1	ARMSTRONG	EXCELON	PEAT GRAY	52150
SEAMLESS FLOORING				
EX-1	DEX-O-TEX	EPOXY	LIMESTONE	112
SUSPENDED CEILINGS				
CG-1	ARMSTRONG	METALWORKS LINEAR UNPERFORATED		*,**
CG-2	ARMSTRONG	METALWORKS RH200 UNPERFORATED		*,***
METAL ROOF				
RF-1	KALZIP	CUSTOM COLOR TO MATCH BENJAMIN MOORE ACADIA GREEN		2034-50

FINISH CODE NOTES:
- * COLOR TO MATCH WP-1.
- ** NOMINAL 4' WIDE PANELS.
- *** NOMINAL 4'x10' PANEL SIZE.

FINISHES ABBREVIATIONS

ACT	ACOUSTICAL CEILING TILE
CONC	CONCRETE
CG	CEILING
CI	CONCRETE INTEGRAL COLORED
CP	CEMENT PLASTER
EXP	EXPOSED
FIN	FINISH
GB	GYPSUM BOARD
GWS	GLASS WALL SYSTEM
L	LOUVERS
RTF	RESILIENT TILE FLOORING
MET	METAL
P	PAINT
PLAM	PLASTIC LAMINATE
RB	RUBBER BASE
SLR	SEALER, TRANSPARENT
T	TILE
WP	WALL PANEL

Santa Clara Valley Transportation Authority

____NO EXCEPTIONS TAKEN (NET)
____MAKE CORRECTIONS NOTED (MCN)
____AMEND AND RESUBMIT (A/R)

Any action shown above is subject to the terms of the contract and does not relieve the Contractor of any of its obligations under the contract, including design and detailing.

Contract No.: DB11002F

By: ____________ Date: ____________

Not For Construction

REV	DATE	BY	SUB	APP	DESCRIPTION
0	20130710				READINESS FOR CONSTRUCTION

DESIGNED BY S. DEBNATH
DRAWN BY R. COLLADO
CHECKED BY E. BALLADA
IN CHARGE R. BARLAAN
DATE 20130710

LICENSED ARCHITECT SOMESH DEBNATH No. C21523 Ren. 3/31/2015 STATE OF CALIFORNIA

Skanska Shimmick Herzog
1436 California Circle
Milpitas, California 95035
A Joint Venture

Anil Verma Associates, Inc.
1970 Broadway, Suite 525 Oakland, CA 94612
Phone: (510) 535-2537 Fax: (510) 535-2339

SUBMITTED

Lockwood, Andrews & Newnam, Inc. A LEO A DALY COMPANY | T·Y·LIN INTERNATIONAL

APPROVED

VTA BART SILICON VALLEY
BART SILICON VALLEY BERRYESSA EXTENSION

LINE, TRACK, STATIONS AND SYSTEMS
DESIGN UNIT 023
MILPITAS STATION

FINISH SCHEDULE
SHEET 1 OF 3

CADD FILENAME C700-S-DB-A701.dwg
SIZE D | SCALE NONE
CONTRACT NO. C700 | REV. 0
AREA CODE DB | SHEET NO. A701 | PAGE NO. 0504

JosephG Jun 26, 2013 - 3:19pm G:\Current Projects\VTA-Berryessa Extension Project\Station - Milpitas\CAD\Drawings Out\13-0710 C700 Milpitas Station - RFC Submitt\C700-S-DB-A701.dwg

INTERIOR FINISH SCHEDULE

AREA	ROOM NO	ROOM NAME	REFERENCE SHEET NO.	FLOOR SUB	FLOOR FIN	FLOOR BASE	WALL NORTH MAT	WALL NORTH FIN	WALL EAST MAT	WALL EAST FIN	WALL SOUTH MAT	WALL SOUTH FIN	WALL WEST MAT	WALL WEST FIN	WAINSCOT NORTH MAT	WAINSCOT NORTH FIN	WAINSCOT EAST MAT	WAINSCOT EAST FIN	WAINSCOT SOUTH MAT	WAINSCOT SOUTH FIN	WAINSCOT WEST MAT	WAINSCOT WEST FIN	CEILING MAT	CEILING FIN	SOFFIT MAT	SOFFIT FIN	REMARK(S)
STATION CONCOURSE	C01	PAID AREA	DB-A123X	CONC	T-1/2/3	–	WP-1	–	WP-1	–	WP-1	–	WP-1	–	–	–	–	–	–	–	–	–	EXP	P-2	CG-2	–	STAIR #1, #2: CI-1; NOTE D, E
	C02	FREE AREA	DB-A125X	CONC	T-1/2/3	–	WP-1	–	WP-1	–	WP-1	–	WP-1	–	–	–	–	–	–	–	–	–	EXP	P-2	CG-2	–	NOTE D
	C03	PAID AREA	DB-A125X	CONC	T-1/2/3	–	WP-1	–	WP-1	–	WP-1	–	WP-1	–	–	–	–	–	–	–	–	–	EXP	P-2	CG-2	–	STAIR #3, #4: CI-1; NOTE D, E
	C04	NOT USED	–	–	–	–	–	–	–	–	–	–	–	–	–	–	–	–	–	–	–	–	–	–	–	–	
	C05	CORRIDOR	DB-A121X	CONC	SLR	RB-1	GB	P-3	GB	P-3	GB	P-3	–	–	–	–	–	–	–	–	–	–	GB	P-3	–	–	
	C06	ELECTRICAL RM #1	DB-A125X	CONC	SLR	RB-1	GB	P-3		P-3	GB	P-3	GB	P-3	–	–	–	–	–	–	–	–	EXP	P-3	–	–	
	C07	VTA COMM ROOM	DB-A125X	CONC	SLR	RB-1	GB	P-3	GB	P-3	GB /WP-1	P-3	GB	P-3	–	–	–	–	–	–	–	–	GB	P-3	–	–	
	C08	POLICE ROOM	DB-A123X	CONC	RTF-1	RB-1	GB	P-3	GB	P-3	GB	P-3	CONC	P-3	–	–	–	–	–	–	–	–	CP	P-3	–	–	
	C09	SECURED INTERVIEW RM	DB-A123X	CONC	RTF-1	RB-1	WIRE	–	GB	P-3	GB	P-3	WIRE	–	–	–	–	–	–	–	–	–	CP	P-3	–	–	
	C10	MAINT ENGR OFFICE	DB-A123X	CONC	SLR	RB-1	GB /WP-1	P-3	GB	P-3	CP	P-3	CONC	P-3	–	–	–	–	–	–	–	–	GB	P-3	–	–	
	C11	VESTIBULE	DB-A123X	CONC	SLR	RB-1	GB	P-3	GB	P-3	GB	P-3	GB	P-3	–	–	–	–	–	–	–	–	GB	P-3	–	–	
	C12	VALVE ROOM	DB-A121X	CONC	SLR	RB-1	CMU/CP	–	CMU/CP	–	CMU/CP	–	CMU/CP	–	–	–	–	–	–	–	–	–	EXP	P-3	–	–	
	C13	STORAGE RM. #2	DB-A123X	CONC	SLR	RB-1	GB	P-3	GB	P-3	GB	P-3	CMU	P-3	–	–	–	–	–	–	–	–	GB	P-3	–	–	
	C14	TELCO ROOM	DB-A123X	CONC	SLR	RB-1	GB	P-3	GB	P-3	GB	P-3	CONC	P-3	–	–	–	–	–	–	–	–	EXP	P-3	–	–	
	C15	ELEV/ESC STORAGE RM.	DB-A121X	CONC	SLR	RB-1	GB	P-3	GB	P-3	CP	P-3	CONC	P-3	–	–	–	–	–	–	–	–	EXP	P-3	–	–	
	C16	SMOKE VENT FAN RM. #1	DB-A121X	CONC	SLR	–	GB	P-3	L4	P-3	GB	P-3	GB	P-3	–	–	–	–	–	–	–	–	–	–	–	–	~~NO ROOF~~
	C17	TC/C BATTERY	DB-A121X	CONC	EX-1	EX-1	GB	P-3	GB	P-3	CMU	–	CONC	P-3	T-5	–	T-5	–	T-5	–	T-5	–	GB	P-3	–	–	8'-0" HIGH WAINSCOT
	C18	TRAIN CONTROL/COMM RM	DB-A121X	CONC	SLR	RB-1	GB	P-3	CMU/GB	–	GB	P-3	GB	P-3	–	–	–	–	–	–	–	–	GB	P-3	–	–	
	C19	GROUNDS MAINT OFFICE	DB-A121X	CONC	SLR	RB-1	CONC	–	GB	P-3	GB	P-3	CONC	–	–	–	–	–	–	–	–	–	GB	P-3	–	–	
	C20	STAIR #6	DB-A121X	CONC	CI-1	RB-1	WP-2	–	WP-2	–	CP	P-3	CP	P-3	–	–	–	–	–	–	–	–	EXP	P-3	–	–	
	C21	STAIR #5	DB-A121X	CONC	CI-1	RB-1	WP-2	–	CP	P-3	CP	P-3	WP-2	–	–	–	–	–	–	–	–	–	EXP	P-3	–	–	
	C22	TRASH	DB-A121X	CONC	SLR	–	CMU	–	CMU	–	CMU	–	CMU	–	–	–	–	–	–	–	–	–	GB	P-3	–	–	
	C23	TC/C HVAC RM	DB-A121X	CONC	SLR	RB-1	GB	P-3	L4	–	GB	P-3	GB	P-3	–	–	–	–	–	–	–	–	GB	P-3	–	–	
	C24	ELECTRICAL RM #2	DB-A122X	CONC	SLR	RB-1	CP	P-3	L3	–	GB /WP-1	P-3	GB	P-3	–	–	–	–	–	–	–	–	GB	P-3	–	–	
	C25	JAN. ROOM	DB-A121X	CONC	RTF-1	RB-1	GB	P-3	GB	P-3	GB	P-3	GB	P-3	–	–	–	–	–	–	–	–	GB	P-3	–	–	
	C26	LOCKER ROOM	DB-A121X	CONC	RTF-1	RB-1	GB	P-3	GB	P-3	GB	P-3	GB	P-3	–	–	–	–	–	–	–	–	GB	P-3	–	–	
	C27	RESTROOM	DB-A121X	CONC	T-4	T-5	GB/T-5	–	T-5	–	T-5	–	GB/T-5	–	–	–	–	–	–	–	–	–	GB	P-3	–	–	COMPLETE COVE BASE WITH FACTORY CORNERS
	C28	VESTIBULE	DB-A122X	CONC	RTF-1	RB-1	GB	P-3	GB	P-3	GB	P-3	GB	P-3	–	–	–	–	–	–	–	–	GB	P-3	–	–	
	C29	BATTERY RM.	DB-A121X	CONC	EX-1	EX-1	GB	P-3	GB	P-3	GB	P-3	GB	P-3	T-5	–	T-5	–	T-5	–	T-5	–	GB	P-3	–	–	8'-0" HIGH WAINSCOT
	C30	MECHANICAL ROOM	DB-A121X	CONC	SLR	RB-1	GB	P-3	GB	P-3	GB	P-3	GB	P-3	–	–	–	–	–	–	–	–	–	–	–	–	
	C31	STAFF BREAK ROOM	DB-A121X	CONC	RTF-1	RB-1	GB	P-3	GB	P-3	GB	P-3	GB	P-3	–	–	–	–	–	–	–	–	ACT	–	–	–	CABINETS: PL-1; NOTE G
	C32	WOMEN	DB-A122X	CONC	T-4	T-4	T-5	–	T-5	–	T-5	–	T-5	–	–	–	–	–	–	–	–	–	CP	P-3	–	–	COMPLETE COVE BASE WITH FACTORY CORNERS
	C33	MEN	DB-A122X	CONC	T-4	T-4	T-5	–	T-5	–	T-5	–	T-5	–	–	–	–	–	–	–	–	–	CP	P-3	–	–	COMPLETE COVE BASE WITH FACTORY CORNERS
	C34	TREASURY VAULT	DB-A122X	CONC	SLR	RB-1	CMU/GB	P-3	CONC /GB	P-3	CMU/GB	–	CMU/GB	P-3	–	–	–	–	–	–	–	–	CP	P-3	–	–	
	C35	STORAGE #1	DB-A122X	CONC	SLR	RB-1	CMU	P-3	CONC	P-3	GB /WP-1	P-3	GB	P-3	–	–	–	–	–	–	–	–	EXP	P-3	–	–	
	C36	EMP RM	DB-A124X	CONC	RTF-1	RB-1	GB	P-3	CMU	P-3	GB	P-3	GB	P-3	–	–	–	–	–	–	–	–	GB	P-3	–	–	
	C37	COMM TERM #1	DB-A124X	CONC	SLR	RB-1	GB	P-3	CMU	P-3	GB	P-3	GB	P-3	–	–	–	–	–	–	–	–	EXP	P-3	–	–	
	C38	LOST & FOUND	DB-A124X	CONC	SLR	RB-1	GB	P-3	CMU	P-3	GB /WP-1	P-3	GB	P-3	–	–	–	–	–	–	–	–	GB	P-3	–	–	
	C39	STAIR #11	DB-A128X	CONC	CI-1	–	CMU	–	CMU	–	CMU	–	CMU	–	–	–	–	–	–	–	–	–	EXP	P-2	–	–	
	C40	STAIR #12	DB-A128X	CONC	CI-1	–	CMU	–	CMU	–	CMU	–	CMU	–	–	–	–	–	–	–	–	–	EXP	P-3	–	–	
	C41	STRETCHER STORAGE	DB-A122X	CONC	RTF-1	RB-1	GB	P-3	GB	P-3	GB	P-3	GB	P-3	–	–	–	–	–	–	–	–	GB	P-3	–	–	
	C42	STAIR #1	DB-A123X	CONC	CI-1	–	CP	–	CP	–	–	–	GWS	–	–	–	–	–	–	–	–	–	EXP	P-2	–	–	
	C43	STAIR #2	DB-A122X	CONC	CI-1	–	GB /WP-1	–	GWS	–	–	–	GB /WP-1	–	–	–	–	–	–	–	–	–	EXP	P-3	–	–	
	C44	STAIR #3	DB-A125X	CONC	CI-1	–	–	–	CP	–	GWS	–	GWS	–	–	–	–	–	–	–	–	–	EXP	P-2	–	–	
	C45	STAIR #4	DB-A124X	CONC	CI-1	–	–	–	GWS	–	GWS	–	CP	–	–	–	–	–	–	–	–	–	EXP	P-3	–	–	
	C46	SMOKE VENT FAN RM. #2	DB-A121X	CONC	SLR	–	GB	P-3	L4	–	GB	P-3	GB	P-3	–	–	–	–	–	–	–	–	–	–	–	–	

NOTES

1. SEE DWG. DB-A701 FOR FINISH CODES AND NOTES.
2. SEE DWG. DB-A701 FOR FINISHES ABBREVIATIONS.
3. SEE DWG. DB-A703 FOR GLAZING SCHEDULE.

Santa Clara Valley Transportation Authority

____NO EXCEPTIONS TAKEN (NET)
____MAKE CORRECTIONS NOTED (MCN)
____AMEND AND RESUBMIT (A/R)

Any action shown above is subject to the terms of the contract and does not relieve the Contractor of any of its obligations under the contract, including design and detailing.

Contract No.: DB11002F

By: _____ Date: _____

Not for Construction

REV	DATE	BY	SUB	APP	DESCRIPTION
0	20130710				READINESS FOR CONSTRUCTION

DESIGNED BY S. DEBNATH
DRAWN BY R. COLLADO
CHECKED BY E. BALLADA
IN CHARGE R. BARLAAN
DATE 20130710

LICENSED ARCHITECT SOMESH DEBNATH No. C21523 STATE OF CALIFORNIA

Skanska Shimmick Herzog
1436 California Circle
Milpitas, California 95035
A Joint Venture

Anil Verma Associates, Inc.
1970 Broadway, Suite 325, Oakland, CA 94612
Phone: (510) 835-2537 Fax: (510) 835-2339
SUBMITTED

Lockwood, Andrews & Newnam, Inc. A LEO A DALY COMPANY
T·Y·LIN INTERNATIONAL
APPROVED

VTA BART SILICON VALLEY
BART SILICON VALLEY BERRYESSA EXTENSION

LINE, TRACK, STATIONS AND SYSTEMS
DESIGN UNIT 023
MILPITAS STATION

FINISH SCHEDULE
SHEET 2 OF 3

CADD FILENAME C700-S-DB-A702.dwg
SIZE D | SCALE NONE
CONTRACT NO. C700 | REV. 0
AREA CODE DB | SHEET NO. A702 | PAGE NO. 0505

JosephG Jun 26, 2013 – 3:20pm G:\Current Projects\VTA-Berryessa Extension Project\Station – Milpitas\CAD\Drawings Out\13-0710 C700 Milpitas Station – RFC Submit\C700-S-DB-A702.dwg

INTERIOR FINISH SCHEDULE

AREA	ROOM NO	ROOM NAME	REFERENCE SHEET NO.	FLOOR			WALL								WAINSCOT								CEILING		SOFFIT		REMARK(S)
				SUB	FIN	BASE	NORTH		EAST		SOUTH		WEST		NORTH		EAST		SOUTH		WEST		MAT	FIN	MAT	FIN	
							MAT	FIN	MAT	FIN	MAT	FIN	MAT	FIN	MAT	FIN	MAT	FIN	MAT	FIN	MAT	FIN					
STATION MEZZANINE	POC1	POC ELEV LOWER LOBBY	DB-A125X	CONC	SLR	–	–	–	GB/WP	–	GB/WP	–	GP/CP	P-3	–	–	–	–	–	–	–	–	–	–	–	–	–
	POC2	POC ESC CONTROL RM	DB-A125X	CONC	SLR	–	GB/CP	P-3	GB/CP	P-3	GB	P-3	GB/WP	–	–	–	–	–	–	–	–	–	–	–	–	–	–
	POC3	POC ELEV MACHINE RM	DB-A125X	CONC	SLR	–	GB/CP	P-3	GB/CP	P-3	GB	P-3	GB/WP	–	–	–	–	–	–	–	–	–	–	–	–	–	–
	POC4	VESTIBULE	DB-A125X	CONC	SLR	–	GB/CP	P-3	GB/CP	P-3	GWS	–	GB/WP	–	–	–	–	–	–	–	–	–	–	–	–	–	–
	POC5	CONCESSION	DB-A125X	CONC	SLR	–	GB/CP	P-3	GB/CP	P-3	GWS	–	GB/WP	–	–	–	–	–	–	–	–	–	–	–	–	–	–
	M01	STAIR VENT FAN ROOM #1	DB-A133	CONC	SLR	–	GB/CP	P-3	GB/CP	P-3	GB/CP	P-3	GWS	–	–	–	–	–	–	–	–	–	–	–	–	–	–
	M02	STAIR VENT FAN ROOM #2	DB-A133	CONC	SLR	–	GB/CP	P-3	GWS	–	GB/CP	P-3	GB/CP	P-3	–	–	–	–	–	–	–	–	–	–	–	–	–
	M03	STAIR VENT FAN ROOM #3	DB-A133	CONC	SLR	–	GB/CP	P-3	GB/CP	P-3	GB/CP	P-3	GWS	–	–	–	–	–	–	–	–	–	–	–	–	–	–
	M04	STAIR VENT FAN ROOM #4	DB-A133	CONC	SLR	–	GB/CP	P-3	GWS	–	GB/CP	P-3	GB/CP	P-3	–	–	–	–	–	–	–	–	–	–	–	–	–

GLAZING SCHEDULE

TYPE	DESCRIPTION	THICKNESS	COLOR	USE
1	CLEAR TEMPERED	1/4"	NONE	ALL MAP, SCHEDULE & ADVERTISING DISPLAY CASES INCLUDING BART STANDARD KIOSK
2	LAMINATED TINTED	3/8"	GRAY UON	GLASS WALL SYSTEM TYPES 1, 2, 3
3	LAMINATED CLEAR	1/2"	NONE	GUARDRAILS,
4	LAMINATED TINTED	1/2"	GRAY UON	FRAMELESS GLASS WALL SYSTEM TYPE 1,
5	LAMINATED CLEAR	1/2"	NONE	FRAMELESS GLASS WALL SYSTEM TYPE 2
6	LAMINATED TINTED TEMPERED	3/4"*	GRAY	SKYLIGHT *½" / ¼" LAMINATIONS

* 1/2" x 3/4" LAMINATIONS

NOTES

1. SEE DWG. DB-A701 FOR FINISH CODES AND NOTES.
2. SEE DWG. DB-A701 FOR FINISHES ABBREVIATIONS.

Santa Clara Valley Transportation Authority

____NO EXCEPTIONS TAKEN (NET)
____MAKE CORRECTIONS NOTED (MCN)
____AMEND AND RESUBMIT (A/R)

Any action shown above is subject to the terms of the contract and does not relieve the Contractor of any of its obligations under the contract, including design and detailing.

Contract No.: DB11002F

By: _____ Date: _____

Not For Construction

REV	DATE	BY	SUB	APP	DESCRIPTION
0	20130710				READINESS FOR CONSTRUCTION

DESIGNED BY S. DEBNATH
DRAWN BY B. ITURALDE
CHECKED BY E. BALLADA
IN CHARGE R. BARLAAN
DATE 20130710

LICENSED ARCHITECT SOMESH DEBNATH No. C21523 STATE OF CALIFORNIA

Skanska Shimmick Herzog
1436 California Circle
Milpitas, California 95035
A Joint Venture

Anil Verma Associates, Inc.
1970 Broadway, Suite 525, Oakland, CA 94612
Phone: (510) 835-2537 Fax: (510) 835-2339

SUBMITTED

Lockwood, Andrews & Newnam, Inc. A LAN & RAIN COMPANY
T·Y·LIN INTERNATIONAL

APPROVED

VTA BART SILICON VALLEY
BART SILICON VALLEY BERRYESSA EXTENSION

LINE, TRACK, STATIONS AND SYSTEMS
DESIGN UNIT 023
MILPITAS STATION

FINISH SCHEDULE
SHEET 3 OF 3

CADD FILENAME C700-S-DB-A703.dwg
SIZE D | SCALE NONE
CONTRACT NO. C700 | REV. 0
AREA CODE DB | SHEET NO. A703 | PAGE NO. 0506

Jun 26, 2013 – 3:20pm G:\Current Projects\VTA-Berryessa Extension Project\Station – Milpitas\CAD\Drawings Out\13-0710 C700 Milpitas Station – RFC Submit\C700-S-DB-A703.dwg
JosephG

DOOR AND HARDWARE SCHEDULE

STATION PLATFORM

DOOR NO	DOOR LOCATION RM NAME	REFERENCE SHEET NO.	FIRE RATING	DOOR WIDTH	DOOR HEIGHT	DOOR THICK	DOOR MAT	DOOR FINISH	DOOR TYPE	FRAME TYPE	FRAME MAT	FRAME FINISH	DETAILS HEAD	DETAILS JAMB	DETAILS SILL	HARDWARE SET	ACCESS CONTROL SYSTEMS EQUIPMENT CR	EL	MC	NOTES	DOOR SWING
P01A	STAIR #11	DB–A116X	1.5 HR	3'–0"	7'–0"	1–3/4"	SS	–	A	A	SS	–				01			●	NOTE 2	RH
P01B	STAIR #11	DB–A116X	1.5 HR	6'–0"	7'–0"	1–3/4"	SS	–	AA	A	SS	–				15			●	NOTE 2, 9	RHA
P02A	STAIR #12	DB–A116X	1.5 HR	3'–0"	7–0"	1–3/4"	SS	–	A	A	SS	–				01			●	NOTE 2	LH
P02B	STAIR #12	DB–A116X	1.5 HR	6'–0"	7'–0"	1–3/4"	SS	–	AA	A	SS	–				15			●	NOTE 2, 9	RHA
P03	UTILITY ROOM #7	DB–A116X	1.5 HR	3'–0"	7'–0"	1–3/4"	SS	–	A	A	SS	–				02			●		RHR
P04	UTILITY ROOM #8	DB–A116X	1.5 HR	3'–0"	7'–0"	1–3/4"	SS	–	A	A	SS	–				02			●		LHR
P05A	PLATFORM #1, STAIR #7	DB–A111X	–	2'–8"	3'–6"	2"	SS	–	E	–	–	–				28			●	NOTE 1	LH
P05B	PLATFORM #1, STAIR #9	DB–A116X	–	2'–8"	3'–6"	2"	SS	–	E	–	–	–				28			●	NOTE 1	RH
P06A	PLATFORM 2, STAIR #8	DB–A111X	–	2'–8"	3'–6"	2"	SS	–	E	–	–	–				28			●	NOTE 1	LH
P06B	PLATFORM 2, STAIR #10	DB–A116X	–	2'–8"	3'–6"	2"	SS	–	E	–	–	–				28			●	NOTE 1	RH
P07	ESCALATOR CONTROL RM #3	DB–A113X	1.5 HR	3'–0"	7'–0"	1–3/4"	SS	–	A	A	SS	–				07	●	●	●		RH
P08	ESCALATOR CONTROL RM #4	DB–A113X	1.5 HR	3'–0"	7'–0"	1–3/4"	SS	–	A	A	SS	–				07	●	●	●		LH
P09	COMM TERM #3	DB–A113X	1.5 HR	3'–0"	7'–0"	1–3/4"	SS	–	A	A	SS	–				03	●	●	●		RH
P10	COMM TERM RM #2	DB–A113X	1.5 HR	3'–0"	7'–0"	1–3/4"	SS	–	A	A	SS	–				03	●	●	●		LH
P11	UTILITY RM #1	DB–A111X	1.5 HR	3'–0"	7'–0"	1–3/4"	SS	–	A	A	SS	–				02			●		RHR
P12	UTILITY RM #2	DB–A111X	1.5 HR	3'–0"	7'–0"	1–3/4"	SS	–	A	A	SS	–				02			●		LHR
P13	ELEV MACH #1	DB–A112X	1.5 HR	3'–6"	7'–0"	1–3/4"	SS	–	A	A	SS	–				03	●	●	●		LH
P14	ELEVATOR MACH #2	DB–A112X	1.5 HR	3'–6"	7'–0"	1–3/4"	SS	–	A	A	SS	–				03	●	●	●		RH
P15	MECH RM #1	DB–A112X	1.5 HR	3'–0"	7'–0"	1–3/4"	SS	–	A	A	SS	–				07	●	●	●		RH
P16	MECHANICAL RM #2	DB–A112X	1.5 HR	3'–0"	7'–0"	1–3/4"	SS	–	A	A	SS	–				07	●	●	●		LH
P17	ELEC RM #3	DB–A112X	1.5 HR	3'–0"	7'–0"	1–3/4"	SS	–	A	A	SS	–				03	●	●	●		LH
P18	ELEC RM #4	DB–A112X	1.5 HR	3'–0"	7'–0"	1–3/4"	SS	–	A	A	SS	–				03	●	●	●		RH
P19	FIRE DEPT STORAGE #1	DB–A112X	1.5 HR	3'–0"	7'–0"	1–3/4"	SS	–	A	A	SS	–				02			●		LH
P20	FIRE DEPT STORAGE #2	DB–A112X	1.5 HR	3'–0"	7'–0"	1–3/4"	SS	–	A	A	SS	–				02			●		RH
P21	SYSTEMS SERVICE STOR #1	DB–A112X	1.5 HR	3'–0"	7'–0"	1–3/4"	SS	–	A	A	SS	–				02			●		LH
P22	SYSTEM SERVICE STOR #2	DB–A112X	1.5 HR	3'–0"	7'–0"	1–3/4"	SS	–	A	A	SS	–				02			●		RH
P23	ESCALATOR CONTROL RM #1	DB–A112X	1.5 HR	3'–0"	7'–0"	1–3/4"	SS	–	A	A	SS	–				03	●	●	●		LH
P24	ESCALATOR CONTROL RM #2	DB–A112X	1.5–HR	3'–0"	7'–0"	1–3/4"	SS	–	A	A	SS	–				03	●	●	●		RH
P25	UTILITY CHASE ACCESS #1	DB–A111X	1.5 HR	3'–0"	7'–0"	1–3/4"	SS	–	A	A	SS	–				17					RHR
P26	UTILITY CHASE ACCESS #2	DB–A111X	1.5 HR	3'–0"	7'–0"	1–3/4"	SS	–	A	A	SS	–				17					LHR
P27A	STAIR #5	DB–A111X	1.5 HR	3'–0"	7'–0"	1–3/4"	SS	–	A	A	SS	–				01			●	NOTE 2	LH
P27B	STAIR #5	DB–A111X	1.5–HR	6'–0"	7'–0"	1–3/4"	SS	–	AA	A	SS	–				15			●	NOTE 2, 9	RHA
P28A	STAIR #6	DB–A111X	1.5 HR	3'–0"	7'–0"	1–3/4"	SS	–	A	A	SS	–				01			●	NOTE 2	RH
P28B	STAIR #6	DB–A111X	1.5 HR	6'–0"	7'–0"	1–3/4"	SS	–	AA	A	SS	–				15			●	NOTE 2, 9	RHA
P31	UTILITY RM #3	DB–A112X	1.5 HR	3'–0"	7'–0"	1–3/4"	SS	–	A	A	SS	–				02			●		RHR
P32	UTILITY RM #4	DB–A112X	1.5 HR	3'–0"	7'–0"	1–3/4"	SS	–	A	A	SS	–				02			●		LHR
P33	UTILITY RM #5	DB–A113X	1.5 HR	3'–0"	7'–0"	1–3/4"	SS	–	A	A	SS	–				02			●		RH
P34	UTILITY RM #6	DB–A113X	1.5 HR	3'–0"	7'–0"	1–3/4"	SS	–	A	A	SS	–				02			●		LH

GENERAL NOTES

1. FOR DETAILED DESCRIPTION OF HARDWARE SETS REFER TO SPECIFICATIONS SECTION 08 71 00
2. SEE COMMUNICATIONS DRAWINGS AND SPECIFICATIONS SECTION 28 10 01 FOR DETAILED DESCRIPTION OF ACCESS CONTROL SYSTEMS EQUIPMENTS. QUANTITIES SHALL BE AS INDICATED IN COMMUNICATIONS DRAWINGS, WHERE DISCREPANCIES OCCUR WITH ARCHITECTURAL DRAWINGS, COMMUNICATIONS DRAWINGS SHALL TAKE PRECEDENCE.
3. WALL STOPS SHALL BE BOLTED TO METAL STUDS OR A 14 GA X 4" MIN WIDE MOUNTING PLATE FASTENED BETWEEN METAL STUDS.
4. COORDINATE DOOR SWINGS WITH FLOOR PLANS. WHERE DISCREPANCIES EXIST DOOR SWINGS ON PLAN SHALL PREVAIL.
5. PROVIDE HARDWARE SPECIFIED WITH THE APPROPRIATE HANDING WITH DOOR SWING.
6. FOR DOOR LOUVER SIZES, SEE MECHANICAL DRAWINGS.

SCHEDULE NOTES

1. GATE WITH LOCALIZED ALARM
2. EXIT DEVICE WITH LOCALIZED ALARM
3. SILL OVER CONTAINMENT CURB
4. HARDWARE BY DOOR MANUFACTURER. SEE PRODUCT SPECIFICATIONS
5. DOOR AND FRAME SHALL BE FACTORY FINISH KYNAR 500, COLOR TO MATCH COMPOSITE WALL PANEL.
6. DOOR TO BE INTERCONNECTED WITH FIRE ALARM. BOTTOM 7'–0" TO BE SOLID WITH LIMIT STOP TO LOWER AS SMOKE CURTAIN PER VENTILATION REPORT.
7. VISION PANEL WITH MIRROR FILM ON ROOM SIDE
8. REFER TO LANDSCAPE DRAWINGS AND SPECIFICATIONS SECTION 05 70 00.1 FOR DETAILS, FINISHES AND HARDWARE FOR STEEL GATES.
9. DOUBLE DOORS SHALL BE EQUIPPED WITH TWO MAGNETIC CONTACTS (ONE FOR EACH DOOR)

ABBREVIATIONS

ALUM	ALUMINUM
CR	CARD READER
EL	ELECTRIC LOCK
H	HEIGHT
HM	HOLLOW METAL
HW	HARDWARE
LH	LEFT HAND
LHR	LEFT HAND REVERSE
MAT	MATERIAL
MC	MAGNETIC CONTACT
P–1	PAINT FINISH COLOR 1 (TO MATCH COMPOSITE WALL PANEL)
P–2	PAINT FINISH COLOR 2
RH	RIGHT HAND
RHA	RIGHT HAND ACTIVE
RHR	RIGHT HAND REVERSE
RHRA	RIGHT HAND REVERSE ACTIVE
ST	GALVANIZED STEEL
SS	STAINLESS STEEL
STL	STEEL
T	THICKNESS
W	WIDTH

DOOR TYPES

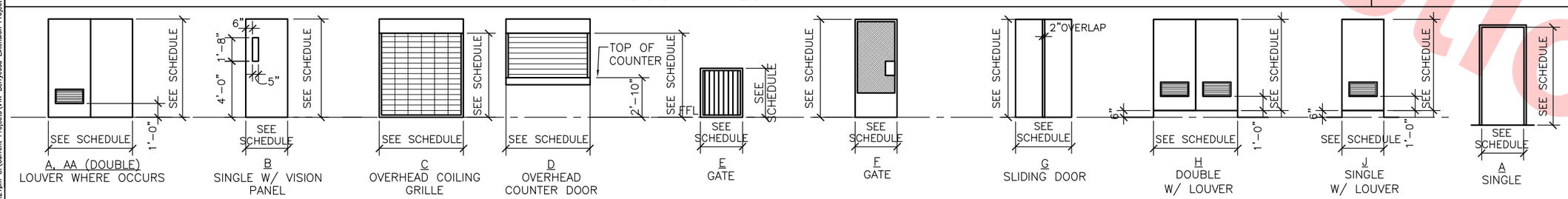

FRAME TYPES

Santa Clara Valley Transportation Authority

____NO EXCEPTIONS TAKEN (NET)
____MAKE CORRECTIONS NOTED (MCN)
____AMEND AND RESUBMIT (A/R)

Any action shown above is subject to the terms of the contract and does not relieve the Contractor of any of its obligations under the contract, including design and detailing.

Contract No.: DB11002F

By: _____ Date: _____

Not For Construction

REV	DATE	BY	SUB	APP	DESCRIPTION
0	20130710				READINESS FOR CONSTRUCTION

DESIGNED BY S. DEBNATH
DRAWN BY R. COLLADO
CHECKED BY E. BALLADA
IN CHARGE R. BARLAAN
DATE 20130710

LICENSED ARCHITECT SAMESH DEBNATH No. C21523 STATE OF CALIFORNIA

Skanska Shimmick Herzog
1436 California Circle
Milpitas, California 95035
A Joint Venture

Anil Verma Associates, Inc.
1970 Broadway, Suite 535
Oakland, CA 94612
Phone: (510) 835-2537 Fax: (510) 835-2339
SUBMITTED

Lockwood, Andrews & Newnam, Inc. A LEO A DALY COMPANY
T·Y·LIN INTERNATIONAL
APPROVED

VTA BART SILICON VALLEY
BART SILICON VALLEY BERRYESSA EXTENSION

LINE, TRACK, STATIONS AND SYSTEMS DESIGN UNIT 023
MILPITAS STATION

DOOR AND HARDWARE SCHEDULE
SHEET 1 OF 3

CADD FILENAME C700–S–DB–A711.dwg
SIZE D | SCALE NONE
CONTRACT NO. C700 | REV. 0
AREA CODE DB | SHEET NO. A711 | PAGE NO. 0507

JosephG Jun 26, 2013 – 3:21pm G:\Current Projects\VTA–Berryessa Extension Project\Station – Milpitas\CAD\Drawings Out\13–0710 C700 Milpitas Station – RFC Submittal\C700–S–DB–A711.dwg

DOOR AND HARDWARE SCHEDULE

STATION CONCOURSE

DOOR NO	DOOR LOCATION RM NAME	REFERENCE SHEET NO.	FIRE RT'G	DOOR WIDTH	DOOR HEIGHT	DOOR THICK	DOOR MAT	DOOR FINISH	DOOR TYPE	FRAME TYPE	FRAME MAT	FRAME FINISH	DETAILS HEAD	DETAILS JAMB	DETAILS SILL	HARDWARE SET	ACCESS CONTROL SYSTEMS EQUIPMENT CR	EL	MC	NOTES	DOOR SWING
C01A	PAID AREA	DB–A122X	–	3'–0"	7'–0"	1–3/4"	HM	P–1	A	A	HM	P–1	–	–		16	●	●	●	NOTE 2	RHR
C01B	PAID AREA	DB–A123X	–	3'–0"	7'–0"	1–3/4"	HM	P–1	A	A	HM	P–1	–	–		16			●	NOTE 2	LHR
C02A	FREE AREA	DB–A122X	–	9'–6"	15'–0"	–	ALUM	–	C	–	–	–	–	–		32				NOTE 4, 6	–
C02B	FREE AREA	DB–A124X	–	29'–0"	15'–0"	–	ALUM	–	C	–	–	–	–	–		32				NOTE 4, 6	–
C02C	FREE AREA	DB–A124X	–	9'–6"	15'–0"	–	ALUM	–	C	–	–	–	–	–		32				NOTE 4, 6	–
C02D	FREE AREA	DB–A123X	–	9'–6"	15'–0"	–	ALUM	–	C	–	–	–	–	–		32				NOTE 4, 6	–
C02E	FREE AREA	DB–A125X	–	29'–0"	15'–0"	–	ALUM	–	C	–	–	–	–	–		32				NOTE 4, 6	–
C02F	FREE AREA	DB–A125X	–	9'–6"	15'–0"	–	ALUM	–	C	–	–	–	–	–		32				NOTE 4, 6	–
C03A	PAID AREA	DB–A124X	–	3'–0"	7'–0"	1–3/4"	HM	P–1	A	A	HM	P–1	–	–		16			●	NOTE 2	LHR
C03B	PAID AREA	DB–A125X	–	3'–0"	7'–0"	1–3/4"	HM	P–1	A	A	HM	P–1	–	–		16			●	NOTE 2	RHR
C03C	PAID AREA	DB–A125X	–																		RH
C04	NOT USED	–	–	–	–	–	–	–	–	–	–	–	–	–		–					–
C05	CORRIDOR	DB–A123X	–	6'–0"	7'–0"	1–3/4"	SS	–	AA	–	SS	–	–	–		23			●	NOTE 9	RHRA
C06A	ELECTRICAL RM #1	DB–A125X	1.5 HR	6'–0"	7'–0"	1–3/4"	SS	–	A	A	SS	–	–	–		14A	●	●	●	NOTE 9	RHRA
C06B	NOT IN USED	–	–	–	–	–	–	–	–	–	–	–	–	–		–					–
C07	COMM ROOM	DB–A125X	1.5 HR	3'–0"	7'–0"	1–3/4"	SS	–	A	A	SS	–	–	–		04	●	●	●		LH
C08	POLICE RM	DB–A123X	1.5 HR	3'–0"	7'–0"	1–3/4"	SS	–	B	A	SS	–	–	–		03	●	●	●	NOTE 7	RHR
C09	SECURED INTERVIEW RM	DB–A123X	–	3'–0"	7'–0"	1–3/4"	HM	P–3	F	A	HM	P–3	–	–		–				NOTE 4	LH
C10	MAINT ENGR OFFICE	DB–A123X	1.5 HR	3'–0"	7'–0"	1–3/4"	SS	–	B	A	SS	–	–	–		03	●	●	●		LH
C11A	VESTIBULE	DB–A123X	1.5 HR	3'–6"	7'–0"	1–3/4"	SS	–	A	A	SS	–	–	–		03	●	●	●		RHR
C11B	VESTIBULE	DB–A121X	1.5 HR	3'–0"	7'–0"	1–3/4"	SS	–	A	A	SS	–	–	–		05					LH
C12A	VALVE ROOM	DB–A123X	1.5 HR	3'–0"	7'–0"	1–3/4"	HM	P–1	A	A	HM	P–1	–	–		06					LHR
C12B	VALVE ROOM	DB–A123X	–	3'–0"	7'–0"	1–3/4"	HM	P–1	A	A	HM	P–1	–	–		19					RHR
C13	STORAGE RM. #2	DB–A123X	1.5 HR	3'–0"	7'–0"	1–3/4"	SS	–	A	A	SS	–	–	–		06					LH
C14	TELCO RM	DB–A123X	–	3'–6"	7'–0"	1–3/4"	HM	P–1	A	A	HM	P–1	–	–		17	●	●	●		LH
C15	ELEV/ESC STORAGE RM.	DB–A121X	1.5 HR	3'–0"	7'–0"	1–3/4"	HM	P–1	A	A	HM	P–1	–	–		05					LH
C16	SMOKE VENT FAN RM. #1	DB–A121X	–	6'–0"	7'–0"	1–3/4"	SS	–	AA	A	SS	–	–	–		24	●	●	●	NOTE 9	RHRA
C17	TC/C BATTERY RM	DB–A121X	1.5 HR	3'–0"	6'–6"	1–3/4"	HM	P–3	J	J	HM	P–3	–	–		05				NOTE 3 & 6	LH
C18A	TRAIN CONTROL/COMM RM	DB–A121X	–	6'–0"	7'–0"	1–3/4"	HM	P–1	AA	A	HM	P–1	–	–		24	●	●	●	NOTE 9	RHRA
C18B	TRAIN CONTROL/COMM RM	DB–A121X	–	6'–0"	7'–0"	1–3/4"	HM	P–1	AA	A	HM	P–1	–	–		24	●	●	●	NOTE 9	RHRA
C19	GROUNDS MAINT OFFICE	DB–A121X	–	6'–0"	7'–0"	1–3/4"	HM	P–1	AA	A	HM	P–1	–	–		25			●	NOTE 9	RHRA
C20A	STAIR #6	DB–A121X	–	3'–0"	7'–0"	1–3/4"	HM	P–1	A	A	HM	P–1	–	–		16			●		LHR
C20B	STAIR #6	DB–A121X	–	6'–0"	7'–0"	1–3/4"	HM	P–1	AA	A	HM	P–1	–	–		27			●	NOTE 9	RHRA
C21A	STAIR #5	DB–A121X	–	3'–0"	7'–0"	1–3/4"	HM	P–1	A	A	HM	P–1	–	–		16			●		RHR
C21B	STAIR #5	DB–A121X	–	6'–0"	7'–0"	1–3/4"	HM	P–1	AA	A	HM	P–1	–	–		27			●	NOTE 9	RHRA
C22	TRASH	DB–A121X	–	8'–0"	7'–0"	–	HM	P–1	AA	A	HM	P–1	–	–		26					RHRA
C23	TC/C HVAC RM	DB–A121X	1.5 HR	6'–0"	7'–0"	1–3/4"	HM	P–3	AA	A	HM	P–3	–	–		14					RHA
C24A	ELEC RM #2	DB–A122X	–	6'–0"	7'–0"	1–3/4"	HM	P–1	AA	A	HM	P–1	–	–		24	●	●	●	NOTE 9	RHRA
C24B	ELEC RM #2	DB–A122X	1.5 HR	3'–0"	7'–0"	1–3/4"	HM	P–1	A	A	HM	P–1	–	–		05					RH
C25	JANITOR ROOM	DB–A121X	1.5 HR	6'–0"	7'–0"	1–3/4"	HM	P–3	A	A	HM	P–3	–	–		14					RHRA
C26	LOCKER RM	DB–A121X	–	3'–0"	7'–0"	1–3/4"	HM	P–3	A	A	HM	P–3	–	–		08					RH
C27	RESTROOM	DB–A121X	–	3'–0"	7'–0"	1–3/4"	HM	P–3	A	A	HM	P–3	–	–		08					LH
C28A	VESTIBULE	DB–A122X	1.5 HR	3'–0"	7'–0"	1–3/4"	HM	P–1	A	A	HM	P–1	–	–		05					RH
C28B	VESTIBULE	DB–A122X	1.5 HR	3'–0"	7'–0"	1–3/4"	HM	P–1	A	A	HM	P–1	–	–		03	●	●	●		LHR
C29	BATTERY RM	DB–A121X	1.5 HR	6'–0"	6'–6"	1–3/4"	HM	P–3	H	H	HM	P–3	–	–		14				NOTE 3 & 6	RHA
C30	MECHANICAL ROOM	DB–A121X	1.5 HR	6'–0"	7'–0"	1–3/4"	HM	P–3	AA	A	HM	P–3	–	–		14					RHA
C31	NOT USED	–	–	–	–	–	–	–	–	–	–	–	–	–		–					–
C32	WOMEN	DB–A122X	–	3–0"	7'–0"	1–3/4"	SS	–	A	A	SS	–	–	–		09				24"X24" LOUVER	LH
C33	MEN	DB–A122X	–	3'–0"	7'–0"	1–3/4"	SS	–	A	A	SS	–	–	–		09				24"X24" LOUVER	RH
C34	TREASURY VAULT	DB–A122X	1.5 HR	3'–0"	7'–0"	1–3/4"	SS	–	A	A	SS	–	–	–		04	●	●	●		LH

GENERAL NOTES

1. FOR DETAILED DESCRIPTION OF HARDWARE SETS REFER TO SPECIFICATIONS SECTION 08 71 00
2. SEE COMMUNICATIONS DRAWINGS AND SPECIFICATIONS SECTION 28 10 01 FOR DETAILED DESCRIPTION OF ACCESS CONTROL SYSTEMS EQUIPMENTS. QUANTITIES SHALL BE AS INDICATED IN COMMUNICATIONS DRAWINGS, WHERE DISCREPANCIES OCCUR WITH ARCHITECTURAL DRAWINGS, COMMUNICATIONS DRAWINGS SHALL TAKE PRECEDENCE.
3. WALL STOPS SHALL BE BOLTED TO METAL STUDS OR A 14 GA X 4" MIN WIDE MOUNTING PLATE FASTENED BETWEEN METAL STUDS.
4. COORDINATE DOOR SWINGS WITH FLOOR PLANS. WHERE DISCREPANCIES EXIST DOOR SWINGS ON PLAN SHALL PREVAIL.
5. PROVIDE HARDWARE SPECIFIED WITH THE APPROPRIATE HANDING WITH DOOR SWING.
6. FOR DOOR LOUVER SIZES, SEE MECHANICAL DRAWINGS.

SCHEDULE NOTES

1. GATE WITH LOCALIZED ALARM
2. EXIT DEVICE WITH LOCALIZED ALARM
3. SILL OVER CONTAINMENT CURB
4. HARDWARE BY DOOR MANUFACTURER. SEE PRODUCT SPECIFICATIONS
5. DOOR AND FRAME SHALL BE FACTORY FINISH KYNAR 500, COLOR TO MATCH COMPOSITE WALL PANEL.
6. DOOR TO BE INTERCONNECTED WITH FIRE ALARM. BOTTOM 7'–0" TO BE SOLID WITH LIMIT STOP TO LOWER AS SMOKE CURTAIN PER VENTILATION REPORT.
7. VISION PANEL WITH MIRROR FILM ON ROOM SIDE
8. REFER TO LANDSCAPE DRAWINGS AND SPECIFICATIONS SECTION 05 70 00.1 FOR DETAILS, FINISHES AND HARDWARE FOR STEEL GATES.
9. DOUBLE DOORS SHALL BE EQUIPPED WITH TWO MAGNETIC CONTACTS (ONE FOR EACH DOOR)

ABBREVIATIONS

ALUM	ALUMINUM
CR	CARD READER
EL	ELECTRIC LOCK
H	HEIGHT
HM	HOLLOW METAL
HW	HARDWARE
LH	LEFT HAND
LHR	LEFT HAND REVERSE
MAT	MATERIAL
MC	MAGNETIC CONTACT
P–1	PAINT FINISH COLOR 1 (TO MATCH COMPOSITE WALL PANEL)
P–2	PAINT FINISH COLOR 2
RH	RIGHT HAND
RHA	RIGHT HAND ACTIVE
RHR	RIGHT HAND REVERSE
RHRA	RIGHT HAND REVERSE ACTIVE
ST	GALVANIZED STEEL
SS	STAINLESS STEEL
STL	STEEL
T	THICKNESS
W	WIDTH

Santa Clara Valley Transportation Authority

____NO EXCEPTIONS TAKEN (NET)
____MAKE CORRECTIONS NOTED (MCN)
____AMEND AND RESUBMIT (A/R)

Any action shown above is subject to the terms of the contract and does not relieve the Contractor of any of its obligations under the contract, including design and detailing.

Contract No.: DB11002F

By: _____ Date: _____

Not For Construction

REV	DATE	BY	SUB	APP	DESCRIPTION
0	20130710				READINESS FOR CONSTRUCTION

DESIGNED BY S. DEBNATH
DRAWN BY R. COLLADO
CHECKED BY E. BALLADA
IN CHARGE R. BARLAAN
DATE 20130710

LICENSED ARCHITECT SANJEEV DEBNATH No. C21523 STATE OF CALIFORNIA

Skanska Shimmick Herzog
1436 California Circle
Milpitas, California 95035
A Joint Venture

Anil Verma Associates, Inc.
1970 Broadway, Suite 525, Oakland, CA 94612
Phone: (510) 835-2537 Fax: (510) 835-2339

Lockwood, Andrews & Newnam, Inc. A LEO A DALY COMPANY

T·Y·LIN INTERNATIONAL

SUBMITTED _____ APPROVED _____

VTA BART SILICON VALLEY
BART SILICON VALLEY BERRYESSA EXTENSION

LINE, TRACK, STATIONS AND SYSTEMS
DESIGN UNIT 023
MILPITAS STATION

DOOR SCHEDULE
SHEET 2 OF 3

CADD FILENAME C700–S–DB–A712.dwg
SIZE D | SCALE NONE
CONTRACT NO. C700 | REV. 0
AREA CODE DB | SHEET NO. A712 | PAGE NO. 0508

Jun 26, 2013 – 3:22pm G:\Current Projects\VTA–Berryessa Extension Project\Station – Milpitas\CAD\Drawings Out\13–0710 C700 Milpitas Station – RFC Submit\C700–S–DB–A712.dwg JosephG

DOOR AND HARDWARE SCHEDULE (CONT'D)

STATION CONCOURSE (CONTINUED)

DOOR NO	DOOR LOCATION RM NAME	REFERENCE SHEET NO.	FIRE RATING	DOOR WIDTH	DOOR HEIGHT	DOOR THICK	DOOR MAT	DOOR FINISH	DOOR TYPE	FRAME TYPE	FRAME MAT	FRAME FINISH	DETAILS HEAD	DETAILS JAMB	DETAILS SILL	HARDWARE SET	ACCESS CONTROL SYSTEMS EQUIPMENT CR	EL	MC	NOTES	DOOR SWING
C35	STORAGE #1	DB–A122X	1.5 HR	3'–0"	7'–0"	1–3/4"	SS	–	A	A	SS	–				06					LH
C36	EMP ROOM	DB–A124X	1.5 HR	3'–0"	7'–0"	1–3/4"	SS	–	A	A	SS	–				04	●	●	●		RH
C37	COMM TERM #1	DB–A124X	1.5 HR	3'–0"	7'–0"	1–3/4"	SS	–	A	A	SS	–				04	●	●	●		LH
C38A	LOST & FOUND	DB–A124X	1.5 HR	3'–0"	8'–0"	1–3/4"	SS	–	A	A	SS	–				06			●		LH
C38B	LOST & FOUND	DB–A124X	1.5 HR	7'–0"	5'–2"	–	SS	–	D	–	SS	–								NOTE 10	–
C39A	STAIR #11	DB–A128X	–	6'–0"	7'–0"	1–3/4"	HM	P–1	AA	A	HM	P–1				27			●		
C39B	STAIR #11	DB–A128X	–	3'–0"	7'–0"	1–3/4"	HM	P–1	A	A	HM	P–1				16			●		RHR
C40A	STAIR #12	DB–A128X	–	6'–0"	7'–0"	1–3/4"	HM	P–1	AA	A	HM	P–1				27			●	NOTE 9	RHRA
C40B	STAIR #12	DB–A128X	–	3'–0"	7'–0"	1–3/4"	HM	P–1	A	A	HM	P–1				16			●		LHR
C41	STRETCHER STORAGE	DB–A122X	1.5 HR	3'–0"	7'–0"	1–3/4"	HM	P–3	G	A	HM	P–3				05					LHR
C46	SMOKE VENT FAN ROOM #2	DB–A121X	–	6'–0"	7'–0"	1–3/4"	SS	–	AA	A	SS	–				24	●	●	●	NOTE 9	RHRA
M01	STAIR VENT FAN ROOM #1	DB–A133	1.5 HR	3'–0"	7'–0"	1–3/4"	HM		A	A	HM					06					RH
M02	STAIR VENT FAN ROOM #1	DB–A133	1.5 HR	3'–0"	7'–0"	1–3/4"	HM		A	A	HM					06					LH
POC1	POC ELEV LOWER LOBBY	DB–A125X	–	7'–0"	10'–0""	–	SS	–	C	–	SS	–									–
POC2	POC ESC CONTROL RM	DB–A125X	–	3'–0"	7'–0"	1–3/4"	SS	–	A	A	SS	–				20					LH
POC3	POC ELEV MACHINE RM	DB–A125X	–	3'–0"	7'–0"	1–3/4"	SS	–	A	A	SS	–				20					LH
POC4	VESTIBULE	DB–A125X	–	3'–0"	7'–0"	1–3/4"	SS	–	A	A	SS	–				20					LH
POC5A	CONCESSION	DB–A125X	–	3'–0"	7'–0"	1–3/4"	SS	–	A	A	SS	–				20					RH
POC5B	CONCESSION	DB–A125X	–	11'–0"	5'–2"	–	SS	–	D	–	SS	–								INSULATED	–

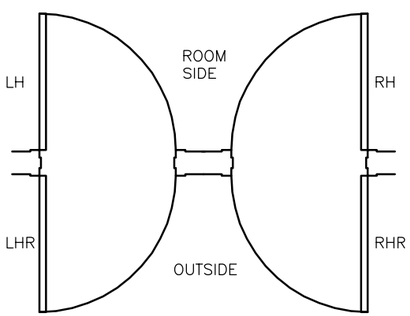

DOOR SWING SINGLE

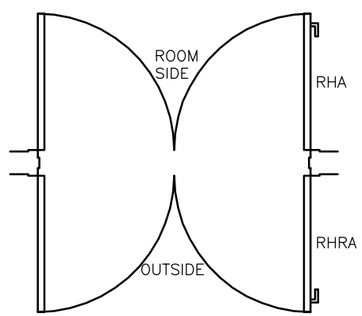

DOOR SWING DOUBLE

GENERAL NOTES

1. FOR DETAILED DESCRIPTION OF HARDWARE SETS REFER TO SPECIFICATIONS SECTION 08 71 00
2. SEE COMMUNICATIONS DRAWINGS AND SPECIFICATIONS SECTION 28 10 01 FOR DETAILED DESCRIPTION OF ACCESS CONTROL SYSTEMS EQUIPMENTS. QUANTITIES SHALL BE AS INDICATED IN COMMUNICATIONS DRAWINGS, WHERE DISCREPANCIES OCCUR WITH ARCHITECTURAL DRAWINGS, COMMUNICATIONS DRAWINGS SHALL TAKE PRECEDENCE.
3. WALL STOPS SHALL BE BOLTED TO METAL STUDS OR A 14 GA X 4" MIN WIDE MOUNTING PLATE FASTENED BETWEEN METAL STUDS.
4. COORDINATE DOOR SWINGS WITH FLOOR PLANS. WHERE DISCREPANCIES EXIST DOOR SWINGS ON PLAN SHALL PREVAIL.
5. PROVIDE HARDWARE SPECIFIED WITH THE APPROPRIATE HANDING WITH DOOR SWING.

SCHEDULE NOTES

1. GATE WITH LOCALIZED ALARM
2. EXIT DEVICE WITH LOCALIZED ALARM
3. SILL OVER CONTAINMENT CURB
4. HARDWARE BY DOOR MANUFACTURER. SEE PRODUCT SPECIFICATIONS
5. DOOR AND FRAME SHALL BE FACTORY FINISH KYNAR 500, COLOR TO MATCH COMPOSITE WALL PANEL.
6. DOOR TO BE INTERCONNECTED WITH FIRE ALARM. BOTTOM 7'–0" TO BE SOLID WITH LIMIT STOP TO LOWER AS SMOKE CURTAIN PER VENTILATION REPORT.
7. VISION PANEL WITH MIRROR FILM ON ROOM SIDE
8. REFER TO LANDSCAPE DRAWINGS AND SPECIFICATIONS SECTION 05 70 00.1 FOR DETAILS, FINISHES AND HARDWARE FOR STEEL GATES.
9. DOUBLE DOORS SHALL BE EQUIPPED WITH TWO MAGNETIC CONTACTS (ONE FOR EACH DOOR)
10. PROVIDE FUSIBLE LINK OR ELECTRIC HEAT DETECTOR.

ABBREVIATIONS

ALUM	ALUMINUM
CR	CARD READER
EL	ELECTRIC LOCK
H	HEIGHT
HM	HOLLOW METAL
HW	HARDWARE
LH	LEFT HAND
LHR	LEFT HAND REVERSE
MAT	MATERIAL
MC	MAGNETIC CONTACT
P–1	PAINT FINISH COLOR 1 (TO MATCH COMPOSITE WALL PANEL)
P–2	PAINT FINISH COLOR 2
RH	RIGHT HAND
RHA	RIGHT HAND ACTIVE
RHR	RIGHT HAND REVERSE
RHRA	RIGHT HAND REVERSE ACTIVE
ST	GALVANIZED STEEL
SS	STAINLESS STEEL
STL	STEEL
T	THICKNESS
W	WIDTH

Santa Clara Valley Transportation Authority

____NO EXCEPTIONS TAKEN (NET)
____MAKE CORRECTIONS NOTED (MCN)
____AMEND AND RESUBMIT (A/R)

Any action shown above is subject to the terms of the contract and does not relieve the Contractor of any of its obligations under the contract, including design and detailing.

Contract No.: DB11002F

By: _____ Date: _____

Not For Construction

REV	DATE	BY	SUB	APP	DESCRIPTION
0	20130710				READINESS FOR CONSTRUCTION

DESIGNED BY S. DEBNATH
DRAWN BY R. COLLADO
CHECKED BY E. BALLADA
IN CHARGE R. BARLAAN
DATE 20130710

LICENSED ARCHITECT SOMESH DEBNATH No. C21523 STATE OF CALIFORNIA

Skanska Shimmick Herzog
1436 California Circle
Milpitas, California 95035
A Joint Venture

Anil Verma Associates, Inc.
1970 Broadway, Suite 525, Oakland, CA 94612
Phone: (510) 835-2537 Fax: (510) 835-2339

Lockwood, Andrews & Newnam, Inc. A LEO A DALY COMPANY
T·Y·LIN INTERNATIONAL

SUBMITTED
APPROVED

VTA BART SILICON VALLEY
BART SILICON VALLEY BERRYESSA EXTENSION

LINE, TRACK, STATIONS AND SYSTEMS
DESIGN UNIT 023
MILPITAS STATION

DOOR SCHEDULE
SHEET 3 OF 3

CADD FILENAME C700–S–DB–A713.dwg
SIZE D | SCALE NONE
CONTRACT NO. C700 | REV. 0
AREA CODE DB | SHEET NO. A713 | PAGE NO. 0509

JosephG Jun 26, 2013 – 3:23pm G:\Current Projects\VTA-Berryessa Extension Project\Station – Milpitas\CAD\Drawings Out\13-0710 C700 Milpitas Station – RFC Submit\C700-S-DB-A713.dwg

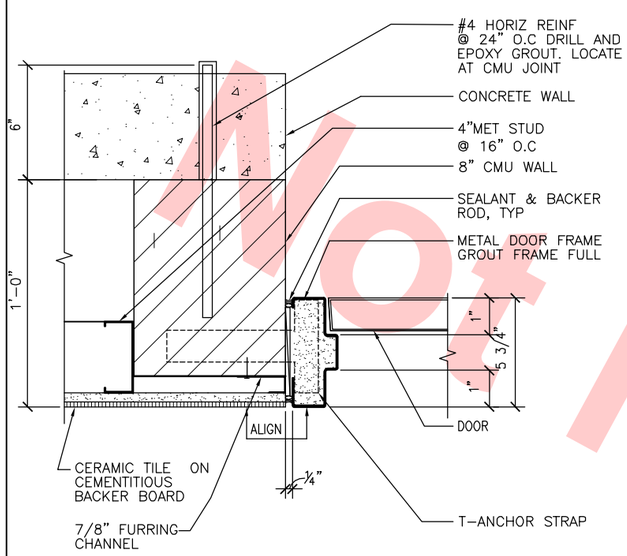

JAMB DETAIL (1 / DB-A714)
SCALE: 3"=1'-0"

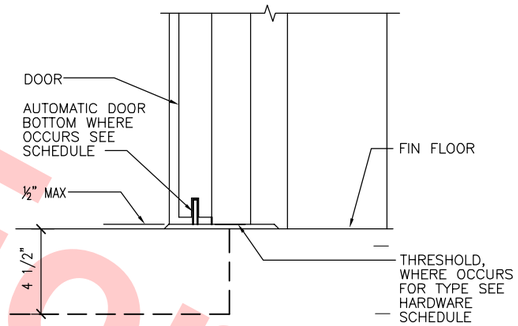

SILL DETAIL (2 / DB-A714)
SCALE: 3"=1'-0"

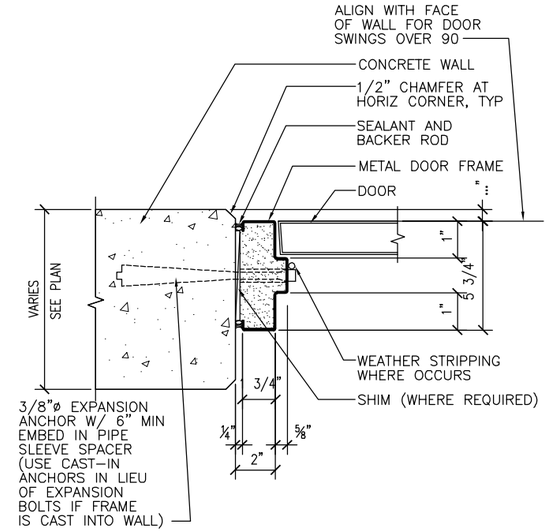

FRAME IN CONCRETE WALL MAY BE CAST-IN TYPE

JAMB DETAIL (3 / DB-A714)
SCALE: 3"=1'-0"

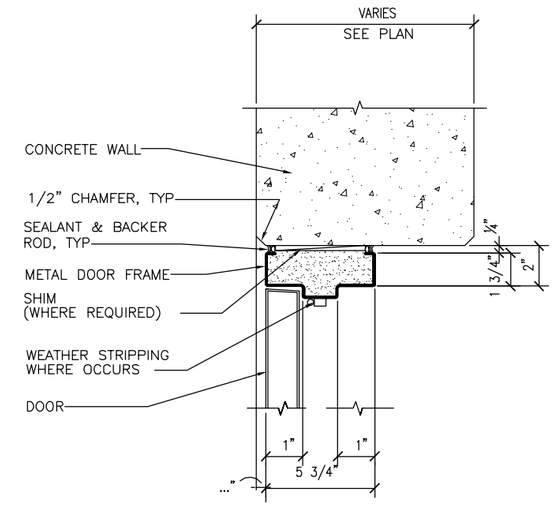

HEAD DETAIL (4 / DB-A714)
SCALE: 3"=1'-0"

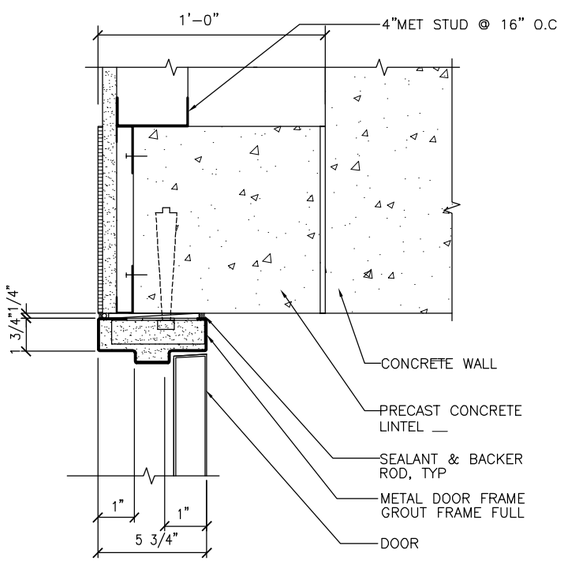

HEAD DETAIL (5 / DB-A714)
SCALE: 3"=1'-0"

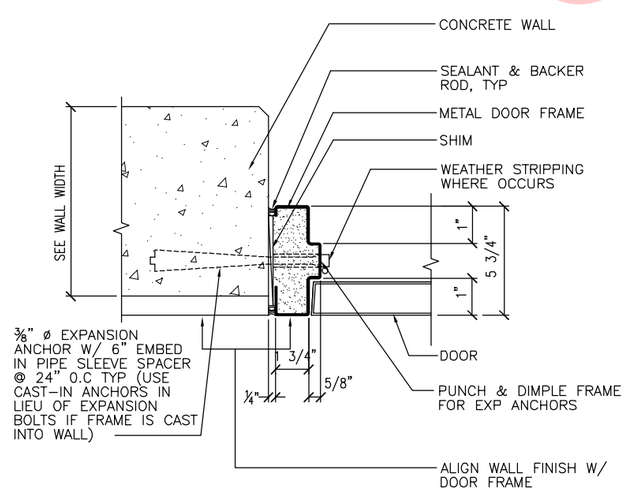

JAMB/HEAD AT WALL FINISH (6 / DB-A714)
SCALE: 3"=1'-0"

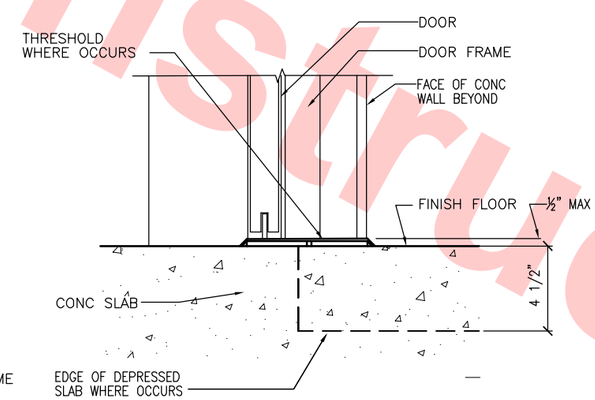

SILL DETAIL (7 / DB-A714)
SCALE: 3"=1'-0"

Santa Clara Valley Transportation Authority

____NO EXCEPTIONS TAKEN (NET)
____MAKE CORRECTIONS NOTED (MCN)
____AMEND AND RESUBMIT (A/R)

Any action shown above is subject to the terms of the contract and does not relieve the Contractor of any of its obligations under the contract, including design and detailing.

Contract No.: DB11002F

By: _____ **Date:** _____

NOTES:

1. SEE DWGS DB-AXXX & DB-AXXX FOR DOOR SCHEDULE AND GENERAL NOTES
2. FOR CMU WALL REINFORCEMENT AND LINTEL DETAILS SEE STRUCTURAL DWGS
3. FILL JAMB AND HEAD W/GROUT, TYPICAL.

Not For Construction

REV	DATE	BY	SUB	APP	DESCRIPTION
0	20130710				READINESS FOR CONSTRUCTION

DESIGNED BY S. DEBNATH
DRAWN BY R. COLLADO
CHECKED BY E. BALLADA
IN CHARGE R. BARLAAN
DATE 20130710

LICENSED ARCHITECT SOMESH DEBNATH No. C21523 STATE OF CALIFORNIA

Skanska Shimmick Herzog
1436 California Circle Milpitas, California 95035
A Joint Venture

Anil Verma Associates, Inc. 1970 Broadway, Suite 525 Oakland, CA 94612 Phone: (510) 835-2537 Fax: (510) 835-2339
SUBMITTED

Lockwood, Andrews & Newnam, Inc. A LEO A DALY COMPANY
T·Y·LIN INTERNATIONAL
APPROVED

VTA BART SILICON VALLEY
BART SILICON VALLEY BERRYESSA EXTENSION

LINE, TRACK, STATIONS AND SYSTEMS DESIGN UNIT 023
MILPITAS STATION

DOOR AND FRAME DETAILS
SHEET 1 OF 2

CADD FILENAME C700-S-DB-A714.dwg
SIZE D | SCALE 3"=1'-0"
CONTRACT NO. C700 | REV. 0
AREA CODE DB | SHEET NO. A714 | PAGE NO. 0510

Joseph G Jun 26, 2013 – 3:24pm G:\Current Projects\VTA-Berryessa Extension Project\Station – Milpitas\CAD\Drawings Out\13-0710 C700 Milpitas Station – RFC Submit\C700-S-DB-A714.dwg

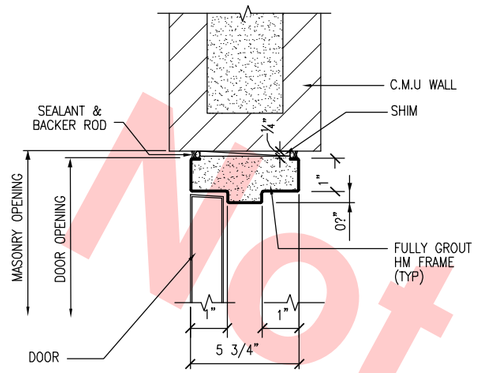

HEAD

SCALE: 3"=1'-0"

1 DB-A715

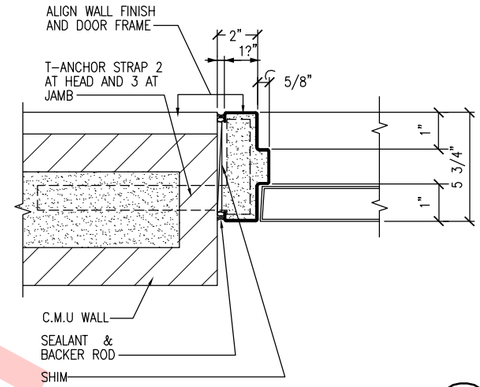

JAMB/HEAD (SIM) AT WALL FINISH

SCALE: 3"=1'-0"

2 DB-A715

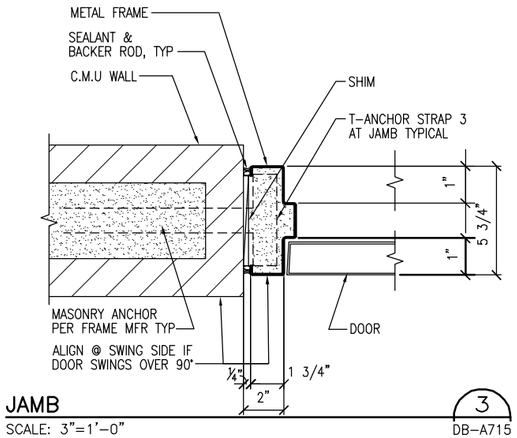

JAMB

SCALE: 3"=1'-0"

3 DB-A715

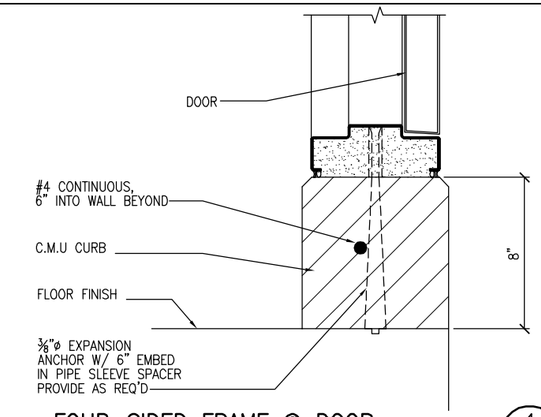

FOUR-SIDED FRAME @ DOOR

SCALE: 3"=1'-0"

4 DB-A715

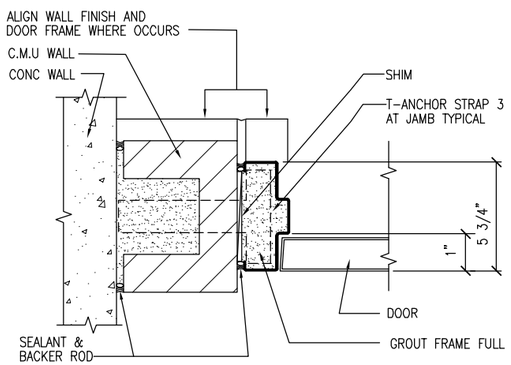

JAMB

SCALE: 3"=1'-0"

5 DB-A715

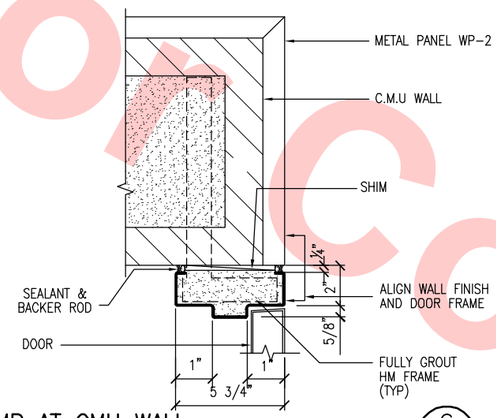

JAMB AT CMU WALL

SCALE: 3"=1'-0"

6 DB-A715

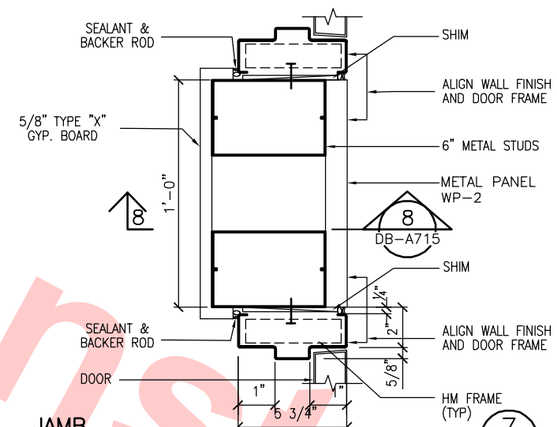

JAMB

SCALE: 3"=1'-0"

7 DB-A715

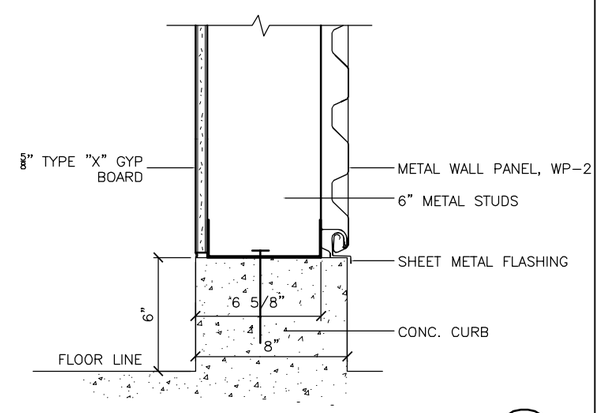

SILL

SCALE: 3"=1'-0"

8 DB-A715

NOTES:

1. SEE DWG'S DB-A711, DB-A712 AND DB-A713 FOR DOOR SCHEDULE AND GENERAL NOTES
2. FOR CMU WALL REINFORCEMENT AND LINTEL DETAILS SEE STRUCTURAL DRAWINGS FILL JAMB AND HEAD W/ GROUT, TYP.
3. FOR DOOR SWING SEE ARCH DWGS DB-AXXX THRU DB-AXXX

Santa Clara Valley Transportation Authority

____NO EXCEPTIONS TAKEN (NET)
____MAKE CORRECTIONS NOTED (MCN)
____AMEND AND RESUBMIT (A/R)

Any action shown above is subject to the terms of the contract and does not relieve the Contractor of any of its obligations under the contract, including design and detailing.

Contract No.: DB11002F

By: _____ Date: _____

Not For Construction

REV	DATE	BY	SUB	APP	DESCRIPTION
0	20130710				READINESS FOR CONSTRUCTION

DESIGNED BY S. DEBNATH
DRAWN BY R. COLLADO
CHECKED BY E. BALLADA
IN CHARGE R. BARLAAN
DATE 20130710

LICENSED ARCHITECT SAMESH DEBNATH No. C21523 STATE OF CALIFORNIA

Skanska Shimmick Herzog
1436 California Circle
Milpitas, California 95035
A Joint Venture

Anil Verma Associates, Inc.
1970 Broadway, Suite 555 Oakland, CA 94612
Phone: (510) 835-2537 Fax: (510) 535-2339

Lockwood, Andrews & Newnam, Inc. A LEA + NALY COMPANY

T-Y-LIN INTERNATIONAL

SUBMITTED _____

APPROVED _____

VTA BART SILICON VALLEY

BART SILICON VALLEY BERRYESSA EXTENSION

LINE, TRACK, STATIONS AND SYSTEMS
DESIGN UNIT 023
MILPITAS STATION

DOOR AND FRAME DETAILS
SHEET 2 OF 2

CADD FILENAME C700-S-DB-A715.dwg
SIZE D | SCALE 3"=1'-0"
CONTRACT NO. C700 | REV. 0
AREA CODE DB | SHEET NO. A715 | PAGE NO. 0511

JosephG Jun 26, 2013 - 3:25pm G:\Current Projects\VTA-Berryessa Extension Project\Station - Milpitas\CAD\Drawings Out\13-0710 C700 Milpitas Station - RFC Submit\C700-S-DB-A715.dwg

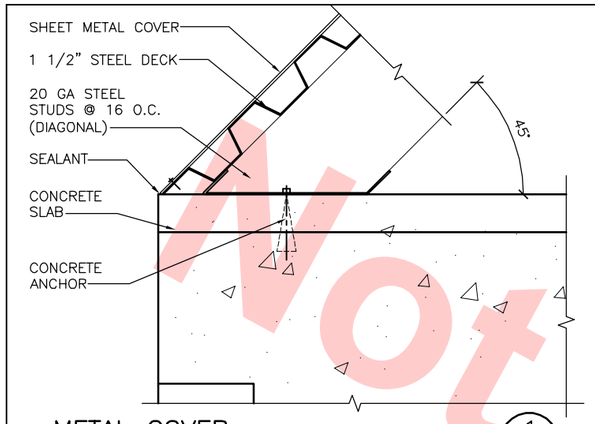

METAL COVER

SCALE: 3" = 1'-0

1 DB-A716 / DB-A526

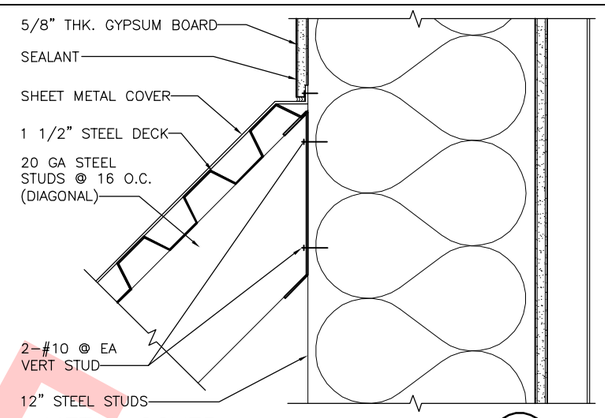

METAL COVER

SCALE: 3" = 1'-0

2 DB-A716 / DB-A526

Not For Construction

Santa Clara Valley Transportation Authority

____NO EXCEPTIONS TAKEN (NET)
____MAKE CORRECTIONS NOTED (MCN)
____AMEND AND RESUBMIT (A/R)

Any action shown above is subject to the terms of the contract and does not relieve the Contractor of any of its obligations under the contract, including design and detailing.

Contract No.: DB11002F

By: _____ **Date:** _____

REV	DATE	BY	SUB	APP	DESCRIPTION
0	20130710				READINESS FOR CONSTRUCTION

DESIGNED BY S. DEBNATH
DRAWN BY R. COLLADO
CHECKED BY E. BALLADA
IN CHARGE R. BARLAAN
DATE 20130710

LICENSED ARCHITECT SOMESH DEBNATH No. C21523 STATE OF CALIFORNIA

Skanska Shimmick Herzog
1436 California Circle
Milpitas, California 95035
A Joint Venture

Anil Verma Associates, Inc.
1970 Broadway, Suite 525, Oakland, CA 94612
Phone: (510) 835-2537 Fax: (510) 835-2339

SUBMITTED

Lockwood, Andrews & Newnam, Inc. A LAN & BAYH COMPANY
T·Y·LIN INTERNATIONAL

APPROVED

VTA BART SILICON VALLEY
BART SILICON VALLEY BERRYESSA EXTENSION

LINE, TRACK, STATIONS AND SYSTEMS
DESIGN UNIT 023
MILPITAS STATION

MISCELLANEOUS DETAILS

CADD FILENAME C700-S-DB-A716.dwg
SIZE D | SCALE 3"=1'-0"
CONTRACT NO. C700 | REV. 0
AREA CODE DB | SHEET NO. A716 | PAGE NO. 0512

JosephG Jun 26, 2013 - 3:26pm G:\Current Projects\VTA-Berryessa Extension Project\Station - Milpitas\CAD\Drawings Out\13-0710 C700 Milpitas Station - RFC Submit\C700-S-DB-A716.dwg

CURTAINWALL SCHEDULE

SEE DWG NO. DB–A703 FOR GLAZING SCHEDULE

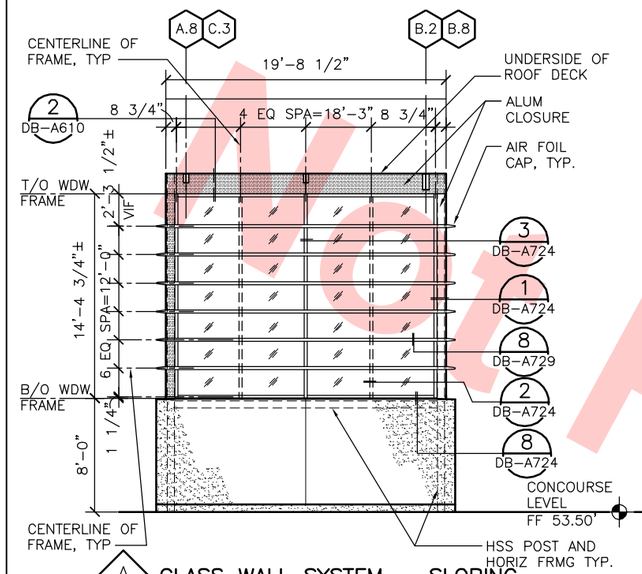

A — GLASS WALL SYSTEM – SLOPING
TYPE 3 DB–A121

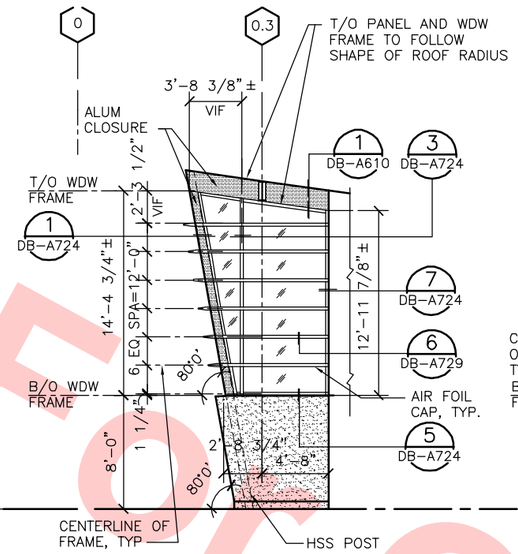

B — GLASS WALL SYSTEM
TYPE 3 DB–A121

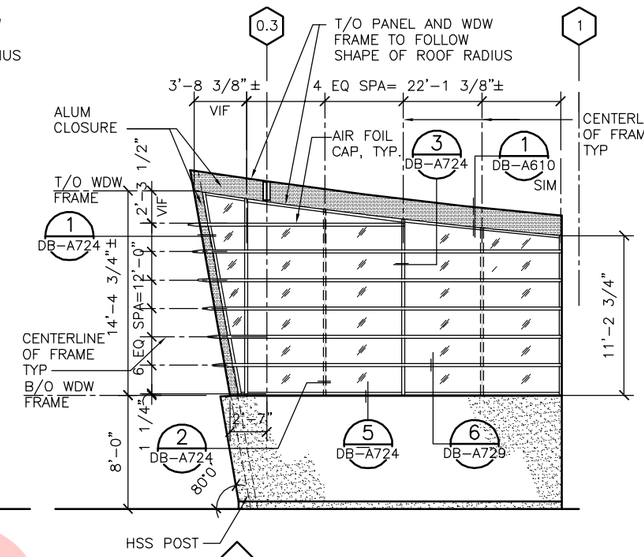

C — GLASS WALL SYSTEM
TYPE 3 DB–A121

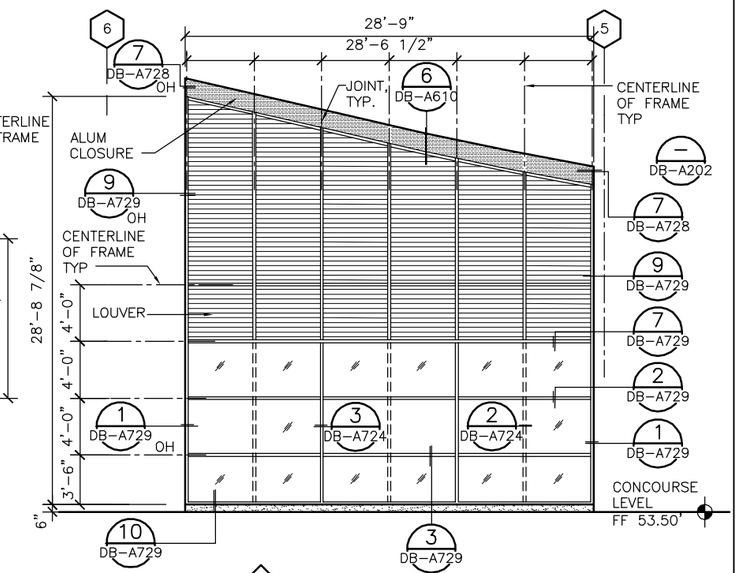

D — GLASS WALL SYSTEM
TYPE 2 DB–A122X DB–A123X

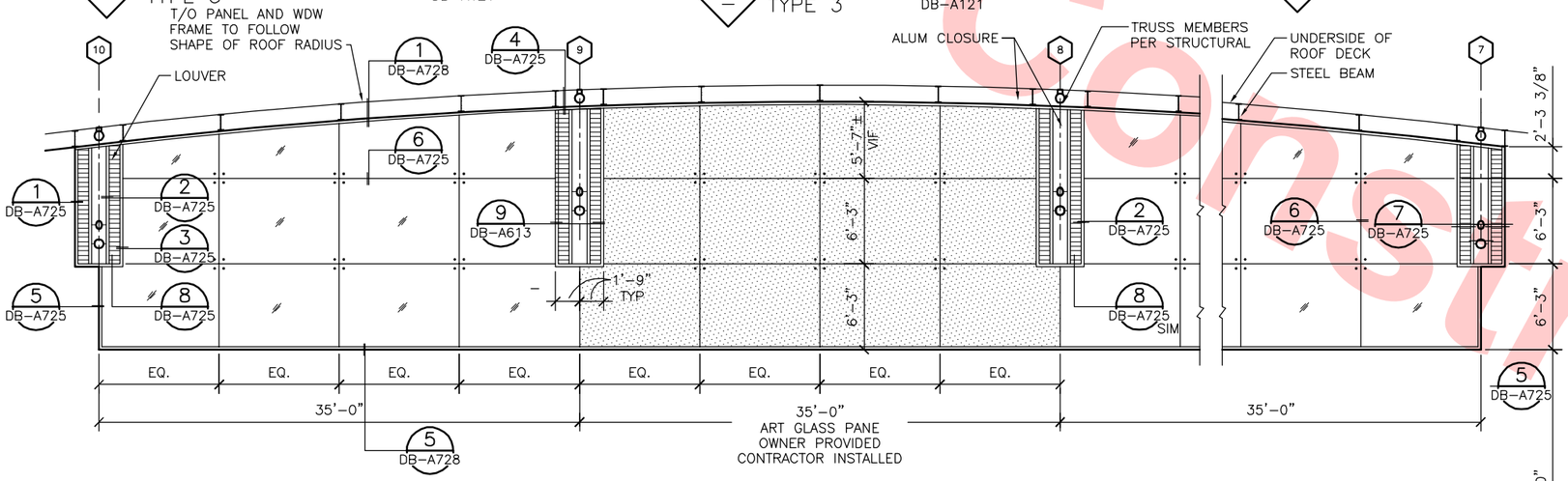

E — FRAMELESS GLASS WALL SYSTEM
TYPE 1 DB–A131 DB–A132

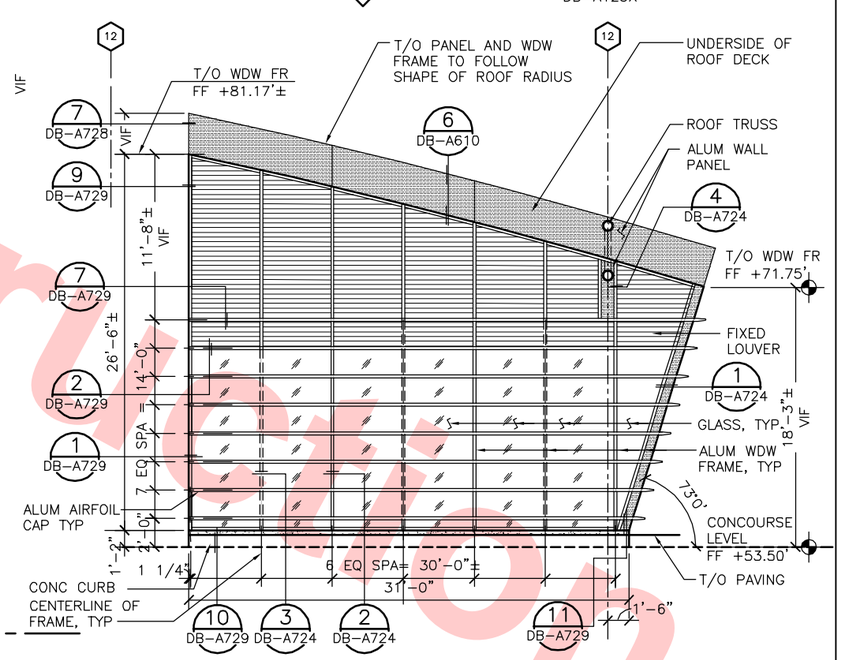

F — GLASS WALL SYSTEM
TYPE 3 DB–A124X DB–A125X

Santa Clara Valley Transportation Authority

____NO EXCEPTIONS TAKEN (NET)
____MAKE CORRECTIONS NOTED (MCN)
____AMEND AND RESUBMIT (A/R)

Any action shown above is subject to the terms of the contract and does not relieve the Contractor of any of its obligations under the contract, including design and detailing.

Contract No.: DB11002F

By: _____ **Date:** _____

REV	DATE	BY	SUB	APP	DESCRIPTION
0	20130710				READINESS FOR CONSTRUCTION

DESIGNED BY S. DEBNATH
DRAWN BY GP/EAB
CHECKED BY E. BALLADA
IN CHARGE R. BARLAAN
DATE 20130710

LICENSED ARCHITECT SUDESH DEBNATH No. C21523 STATE OF CALIFORNIA

Skanska Shimmick Herzog
1436 California Circle
Milpitas, California 95035
A Joint Venture

Anil Verma Associates, Inc.
1970 Broadway, Suite 535 Oakland, CA 94612
Phone: (510) 835-2537 Fax: (510) 835-2339
SUBMITTED

Lockwood, Andrews & Newnam, Inc. A LAN & DALY COMPANY
T·Y·LIN INTERNATIONAL
APPROVED

VTA BART SILICON VALLEY
BART SILICON VALLEY BERRYESSA EXTENSION

LINE, TRACK, STATIONS AND SYSTEMS
DESIGN UNIT 023
MILPITAS STATION

CURTAINWALL SCHEDULE
SHEET 1 OF 2

CADD FILENAME C700–S–DB–A721.dwg
SIZE D | SCALE NONE
CONTRACT NO. C700 | REV. 0
AREA CODE DB | SHEET NO. A721 | PAGE NO. 0513

Not For Construction

JosephG Jun 26, 2013 – 3:27pm G:\Current Projects\VTA–Berryessa Extension Project\Station – Milpitas\CAD\Drawings Out\13–0710 C700 Milpitas Station – RFC Submit\C700–S–DB–A721.dwg

CURTAINWALL SCHEDULE

SEE DWG NO. DB–A702 FOR GLAZING SCHEDULE

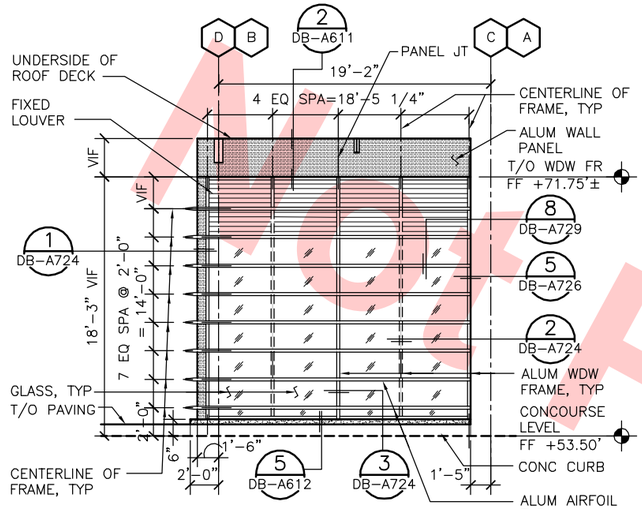

G — GLASS WALL SYSTEM – SLOPING
TYPE 3 DB–A126X

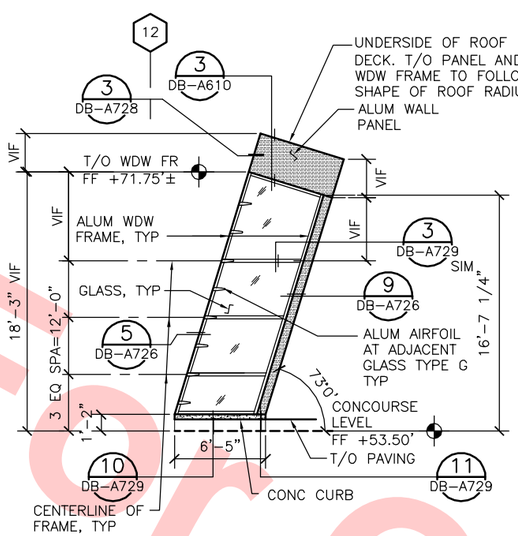

H — GLASS WALL SYSTEM
TYPE 2 DB–A126X

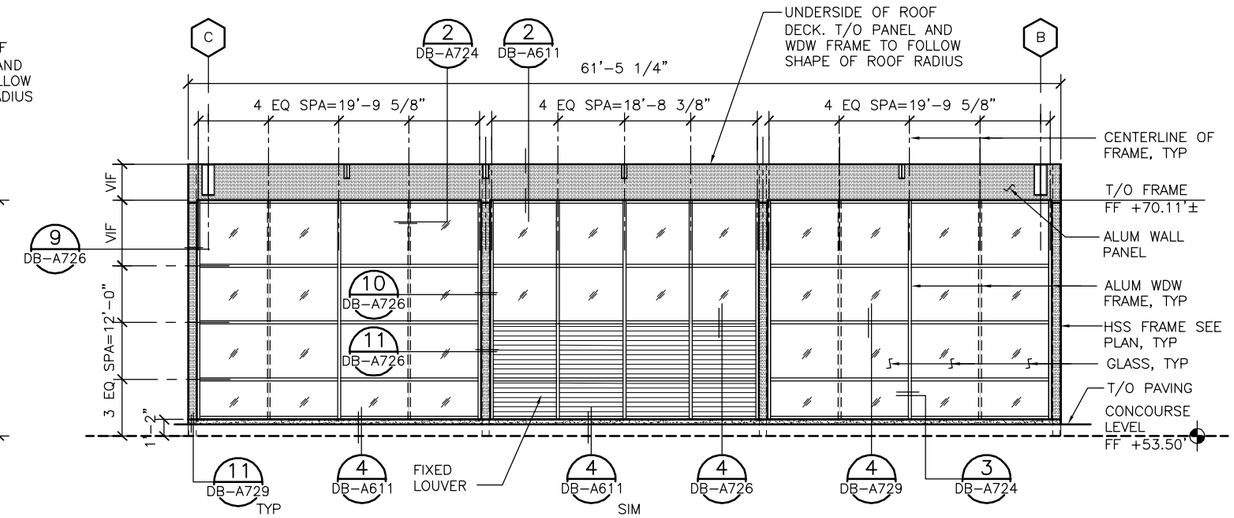

J — GLASS WALL SYSTEM – SLOPING
TYPE 2 DB–A126X

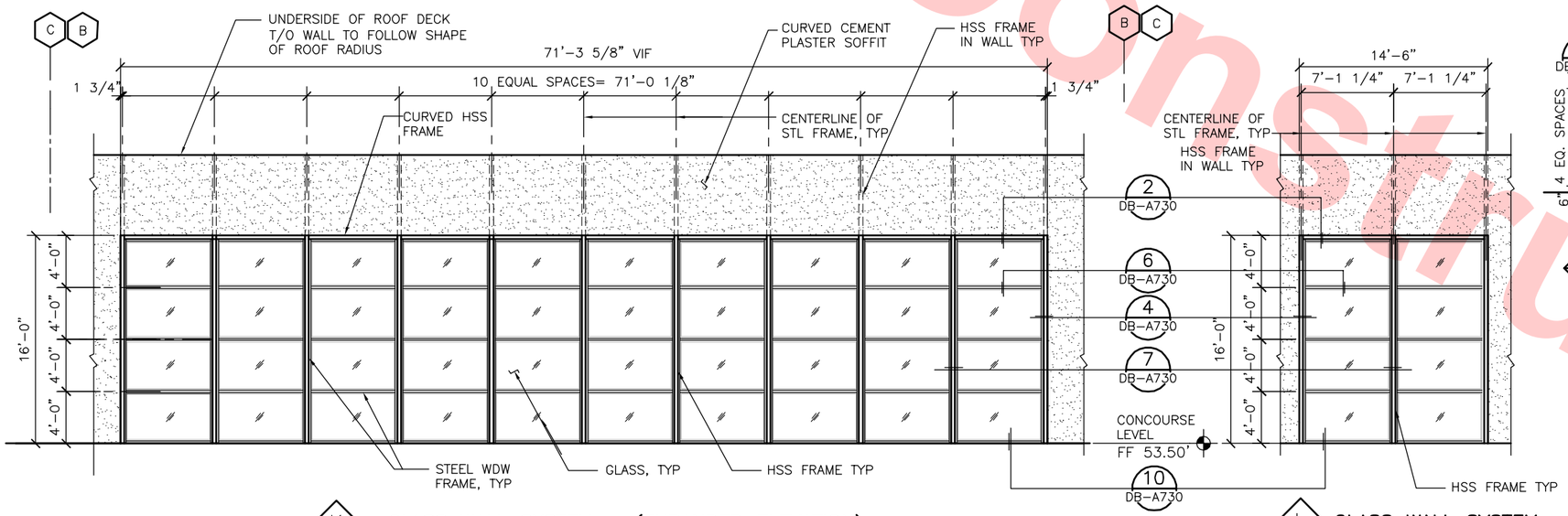

K — GLASS WALL SYSTEM – (EXPANDED ELEVATION)
TYPE 4 DB–A122X DB–A123X DB–A124X DB–A125X

L — GLASS WALL SYSTEM
TYPE 4 DB–A122X DB–A123X

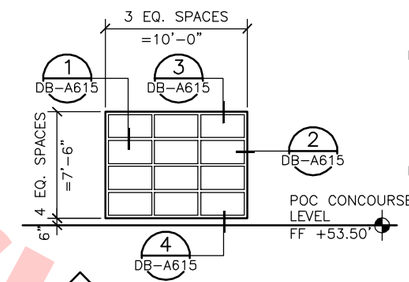

M — GLASS WALL SYSTEM
TYPE 2 DB–A573

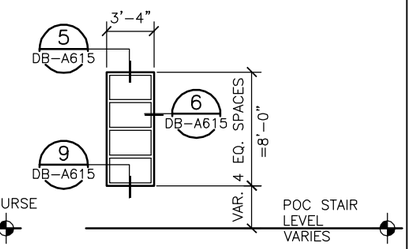

N — GLASS WALL SYSTEM
TYPE 2 DB–A573

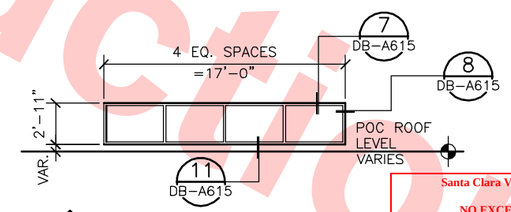

O — GLASS WALL SYSTEM
TYPE 2 DB–A574

Santa Clara Valley Transportation Authority

____NO EXCEPTIONS TAKEN (NET)
____MAKE CORRECTIONS NOTED (MCN)
____AMEND AND RESUBMIT (A/R)

Any action shown above is subject to the terms of the contract and does not relieve the Contractor of any of its obligations under the contract, including design and detailing.

Contract No.: DB11002F

By: _____ Date: _____

Not For Construction

REV	DATE	BY	SUB	APP	DESCRIPTION
0	20130710				READINESS FOR CONSTRUCTION

DESIGNED BY S. DEBNATH
DRAWN BY RC/GP/EAB
CHECKED BY E. BALLADA
IN CHARGE R. BARLAAN
DATE 20130710

LICENSED ARCHITECT SOMESH DEBNATH No. C21523 STATE OF CALIFORNIA

Skanska Shimmick Herzog
1436 California Circle
Milpitas, California 95035
A Joint Venture

Anil Verma Associates, Inc.
1970 Broadway, Suite 535, Oakland, CA 94612
Phone: (510) 835-2537 Fax: (510) 835-2339

SUBMITTED

Lockwood, Andrews & Newnam, Inc. A LEO A DALY COMPANY
T·Y·LIN INTERNATIONAL

APPROVED

VTA BART SILICON VALLEY
BART SILICON VALLEY BERRYESSA EXTENSION

LINE, TRACK, STATIONS AND SYSTEMS
DESIGN UNIT 023
MILPITAS STATION

CURTAINWALL SCHEDULE
SHEET 2 OF 2

CADD FILENAME C700–S–DB–A722.dwg
SIZE D | SCALE NONE
CONTRACT NO. C700 | REV. 0
AREA CODE DB | SHEET NO. A722 | PAGE NO. 0514

JosephG Jun 26, 2013 – 3:28pm G:\Current Projects\VTA–Berryessa Extension Project\Station – Milpitas\CAD\Drawings Out\13–0710 C700 Milpitas Station – RFC Submittl\C700–S–DB–A722.dwg

LOUVER SCHEDULE

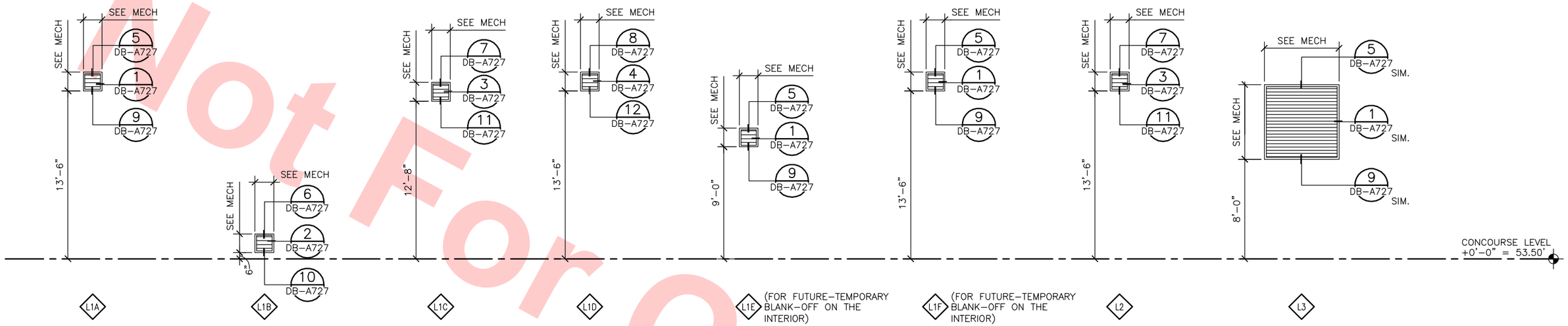

Santa Clara Valley Transportation Authority

____NO EXCEPTIONS TAKEN (NET)
____MAKE CORRECTIONS NOTED (MCN)
____AMEND AND RESUBMIT (A/R)

Any action shown above is subject to the terms of the contract and does not relieve the Contractor of any of its obligations under the contract, including design and detailing.

Contract No.: DB11002F

By: _____ Date: _____

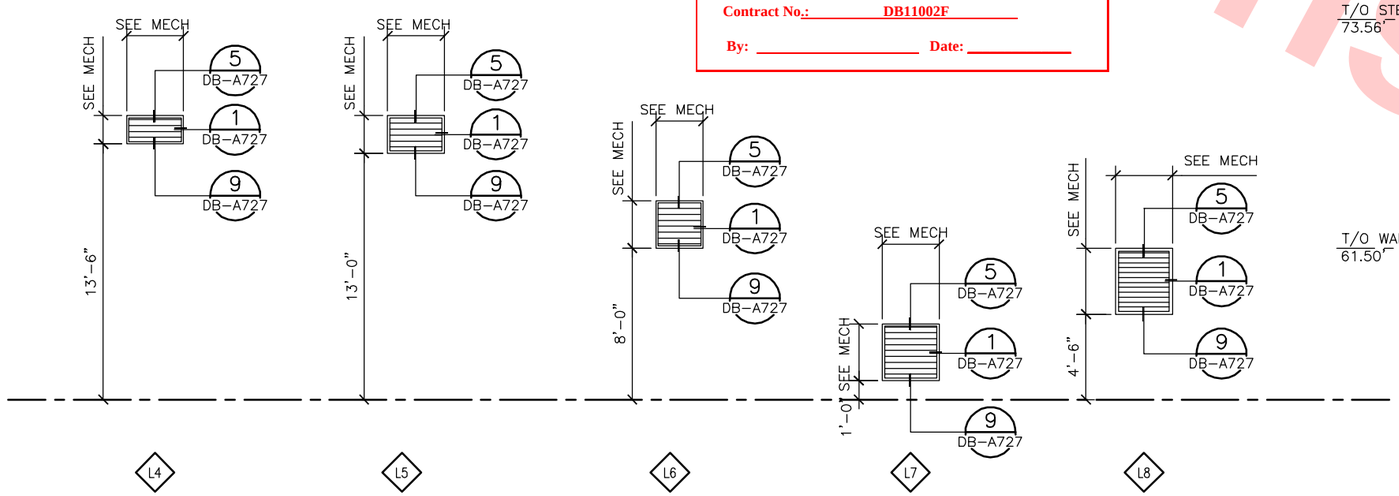

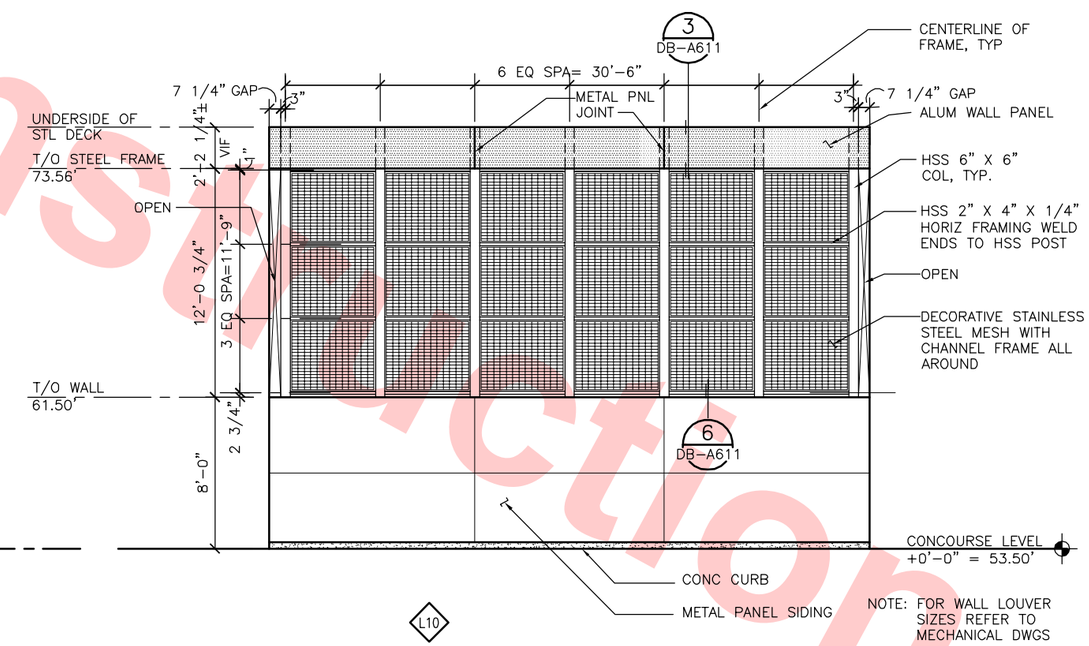

NOTE: FOR WALL LOUVER SIZES REFER TO MECHANICAL DWGS

LOUVER SCHEDULE 1 DB-A723
SCALE: NTS

Not For Construction

REV	DATE	BY	SUB	APP	DESCRIPTION
0	20130710				READINESS FOR CONSTRUCTION

DESIGNED BY S. DEBNATH
DRAWN BY RC/EAB
CHECKED BY E. BALLADA
IN CHARGE R. BARLAAN
DATE 20130710

LICENSED ARCHITECT SOMESH DEBNATH No. C21523 STATE OF CALIFORNIA

Skanska Shimmick Herzog
1436 California Circle
Milpitas, California 95035
A Joint Venture

Anil Verma Associates, Inc.
1970 Broadway, Suite 535 Oakland, CA 94612
Phone: (510) 835-2532 Fax: (510) 835-2339
SUBMITTED

Lockwood, Andrews & Newnam, Inc. A LEO A DALY COMPANY
T·Y·LIN INTERNATIONAL
APPROVED

VTA BART SILICON VALLEY
BART SILICON VALLEY BERRYESSA EXTENSION

LINE, TRACK, STATIONS AND SYSTEMS DESIGN UNIT 023
MILPITAS STATION
LOUVER SCHEDULE

CADD FILENAME C700-S-DB-A723.dwg
SIZE D | SCALE NONE
CONTRACT NO. C700 | REV. 0
AREA CODE DB | SHEET NO. A723 | PAGE NO. 0515

JosephC Jun 26, 2013 – 3:29pm G:\Current Projects\VTA-Berryessa Extension Project\Station – Milpitas\CAD\Drawings Out\13-0710 C700 Milpitas Station – RFC Submit\C700-S-DB-A723.dwg

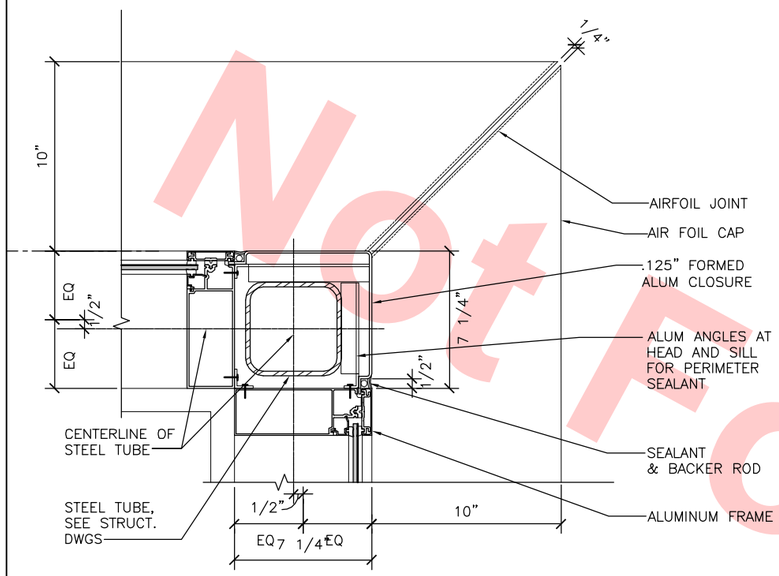

VERTICAL MULLION 1 — DB-A563, DB-A721, DB-A722 / DB-A724
SCALE: 3"=1'-0"

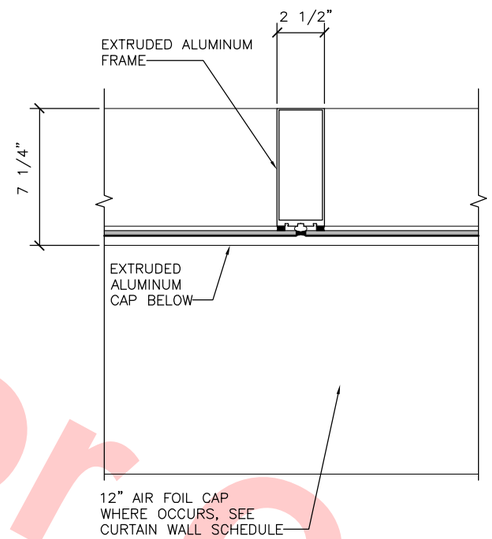

VERTICAL MULLION 2 — DB-A721, DB-A722 / DB-A724
SCALE: 3"=1'-0"

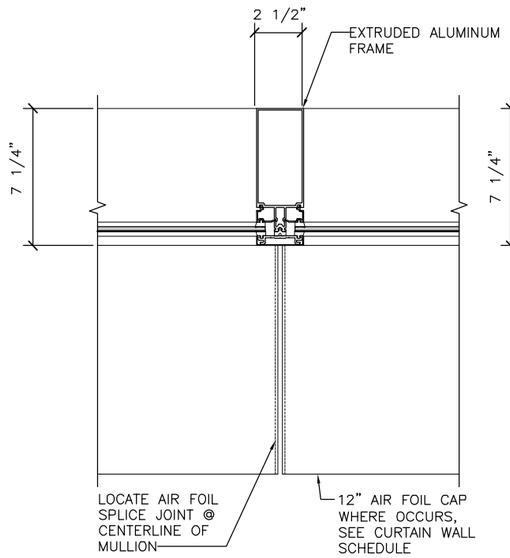

VERTICAL MULLION 3 — DB-A721, DB-A722 / DB-A724
SCALE: 3"=1'-0"

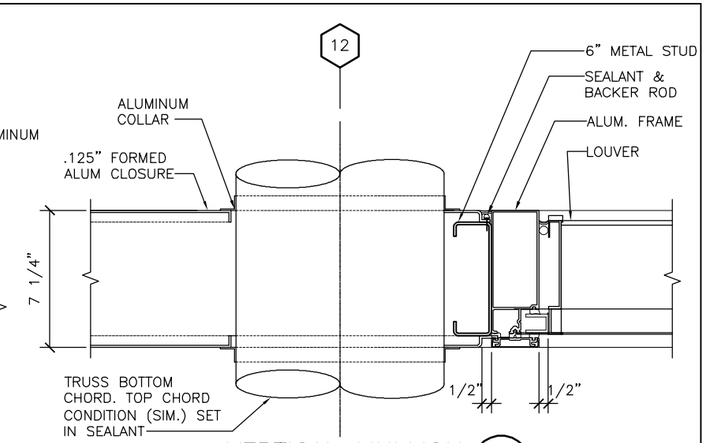

VERTICAL MULLION 4 — DB-A721 / DB-A724
SCALE: 3"=1'-0"

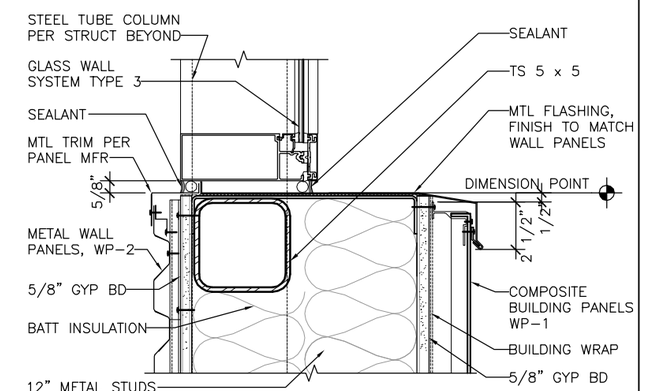

SILL 5 — DB-A568, DB-A721 / DB-A724
SCALE: 3"=1'-0"

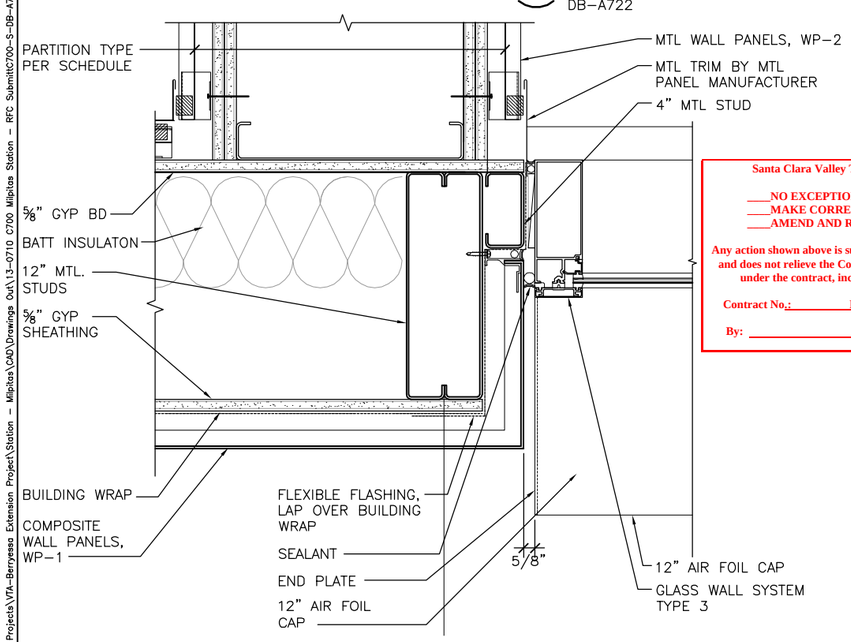

JAMB 6 — DB-A565, DB-A721 / DB-A724
SCALE: 3"=1'-0"

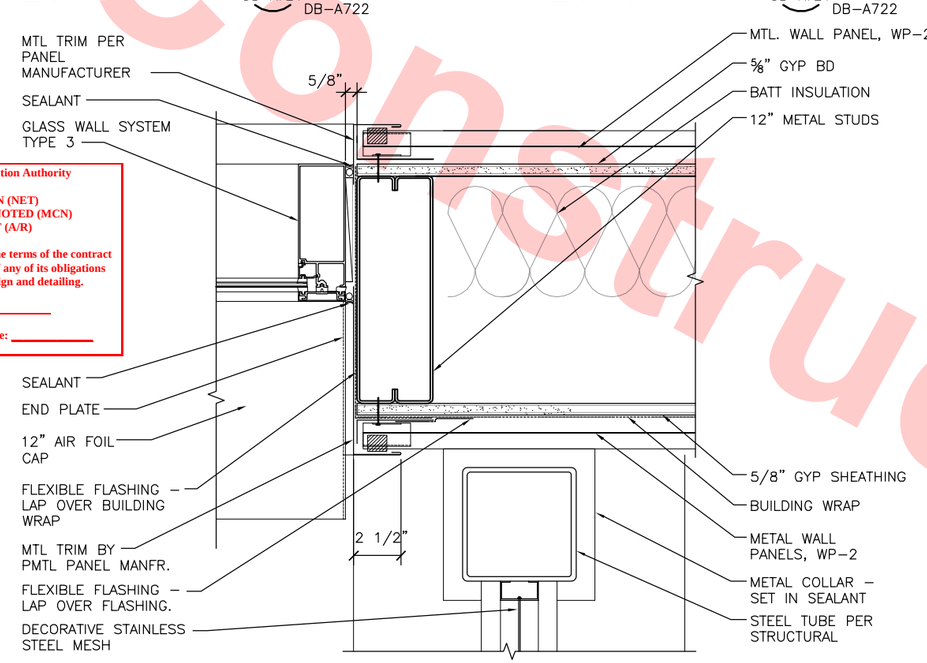

JAMB 7 — DB-A721 / DB-A724
SCALE: 3"=1'-0"

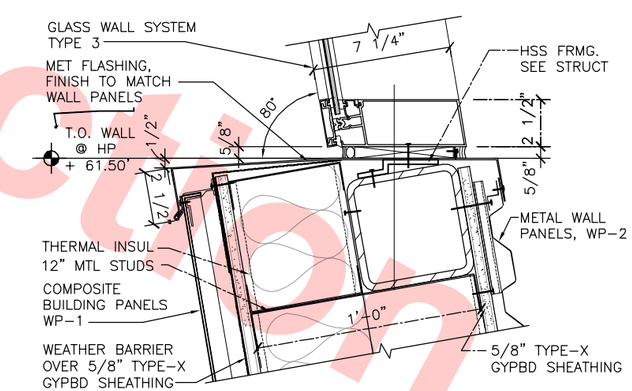

SILL 8 — DB-A521, DB-A721 / DB-A724
SCALE: 3"=1'-0"

Not For Construction

Santa Clara Valley Transportation Authority

____NO EXCEPTIONS TAKEN (NET)
____MAKE CORRECTIONS NOTED (MCN)
____AMEND AND RESUBMIT (A/R)

Any action shown above is subject to the terms of the contract and does not relieve the Contractor of any of its obligations under the contract, including design and detailing.

Contract No.: DB11002F

By: _____ Date: _____

REV	DATE	BY	SUB	APP	DESCRIPTION
0	20130710				READINESS FOR CONSTRUCTION

DESIGNED BY S. DEBNATH
DRAWN BY R. COLLADO
CHECKED BY E. BALLADA
IN CHARGE R. BARLAAN
DATE 20130710

LICENSED ARCHITECT — SOMESH DEBNATH — No. C21523 — STATE OF CALIFORNIA

Skanska Shimmick Herzog
1436 California Circle
Milpitas, California 95035
A Joint Venture

Anil Verma Associates, Inc.
1970 Broadway, Suite 525, Oakland, CA 94612
Phone: (510) 835-2537 Fax: (510) 535-2339

Lockwood, Andrews & Newnam, Inc. — A LAN & BAYH COMPANY
T·Y·LIN INTERNATIONAL

SUBMITTED _____
APPROVED _____

VTA BART SILICON VALLEY
BART SILICON VALLEY BERRYESSA EXTENSION

LINE, TRACK, STATIONS AND SYSTEMS
DESIGN UNIT 023
MILPITAS STATION

WINDOW DETAILS
SHEET 1 OF 3

CADD FILENAME C700-S-DB-A724.dwg
SIZE D | SCALE 3"=1'-0"
CONTRACT NO. C700 | REV. 0
AREA CODE DB | SHEET NO. A724 | PAGE NO. 0516

JosephG Jun 26, 2013 – 3:30pm G:\Current Projects\VTA-Berryessa Extension Project\Station – Milpitas\CAD\Drawings Out\13-0710 C700 Milpitas Station – RFC Submit\C700-S-DB-A724.dwg

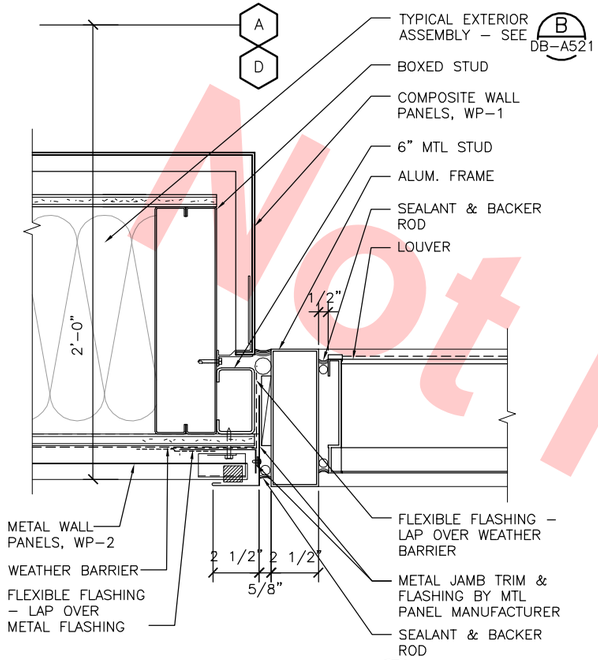

JAMB 1
SCALE: 3"=1'–0"
DB–A725 DB–A721

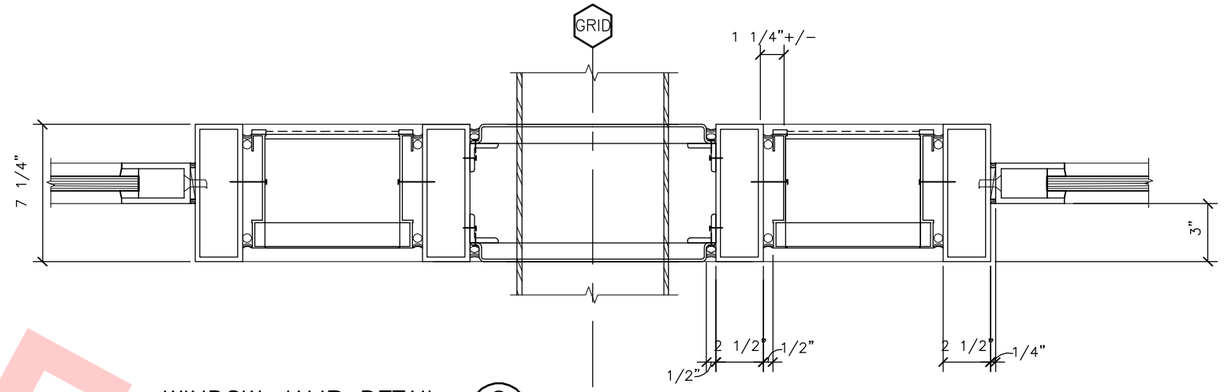

WINDOW JAMB DETAIL 2
SCALE: 3"=1'–0"
DB–A725
DB–A721

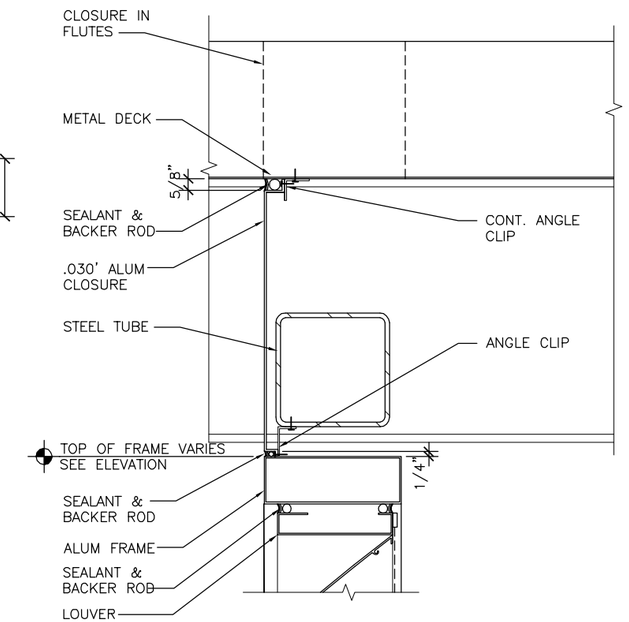

HEAD 4
SCALE: 3"=1'–0"
DB–A725 DB–A721

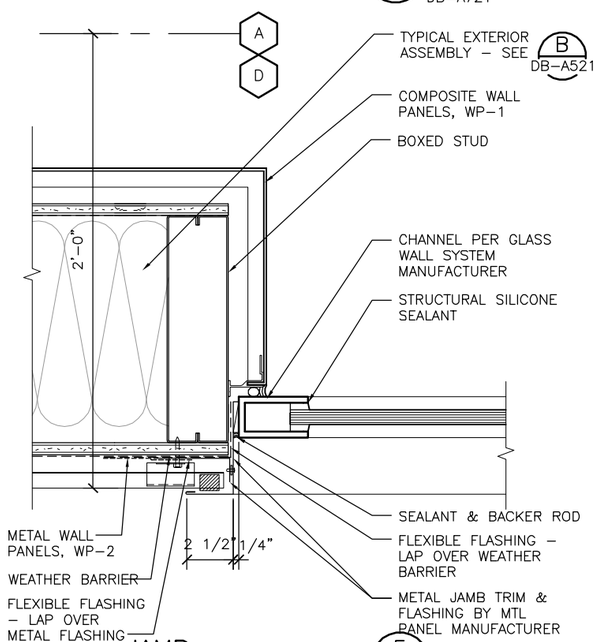

JAMB 5
SCALE: 3"=1'–0"
DB–A725 DB–A721

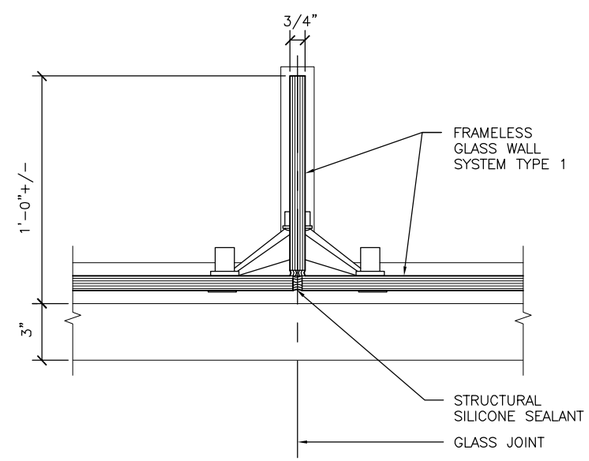

MULLION 6
SCALE: 3"=1'–0"
DB–A725 DB–A721

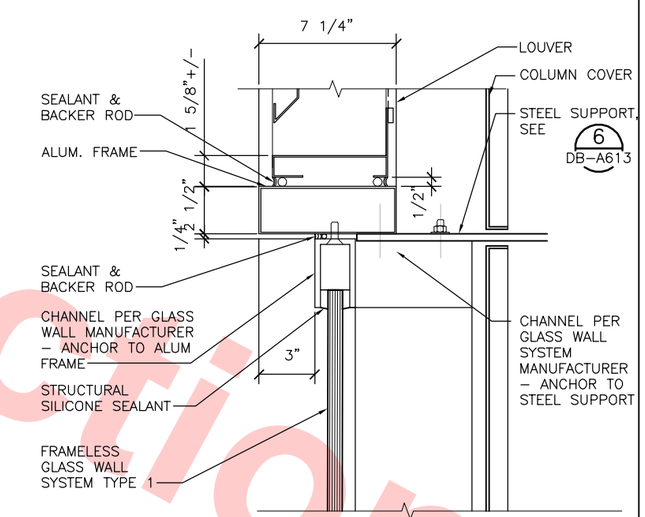

HORIZONTAL MULLION 8
SCALE: 3"=1'–0"
DB–A725 DB–A613 DB–A721

Santa Clara Valley Transportation Authority

____NO EXCEPTIONS TAKEN (NET)
____MAKE CORRECTIONS NOTED (MCN)
____AMEND AND RESUBMIT (A/R)

Any action shown above is subject to the terms of the contract and does not relieve the Contractor of any of its obligations under the contract, including design and detailing.

Contract No.: DB11002F

By: _____ **Date:** _____

Not For Construction

REV	DATE	BY	SUB	APP	DESCRIPTION
0	20130710				READINESS FOR CONSTRUCTION

DESIGNED BY S. DEBNATH
DRAWN BY G. PUTNEY
CHECKED BY E. BALLADA
IN CHARGE R. BARLAAN
DATE 20130710

LICENSED ARCHITECT SOMESH DEBNATH No. C21523 STATE OF CALIFORNIA

Skanska Shimmick Herzog
1436 California Circle
Milpitas, California 95035
A Joint Venture

Anil Verma Associates, Inc.
1970 Broadway, Suite 525, Oakland, CA 94612
Phone: (510) 835-2537 Fax: (510) 835-2339

Lockwood, Andrews & Newnam, Inc. A LEO A DALY COMPANY
T·Y·LIN INTERNATIONAL

SUBMITTED _____
APPROVED _____

VTA BART SILICON VALLEY
BART SILICON VALLEY BERRYESSA EXTENSION

LINE, TRACK, STATIONS AND SYSTEMS DESIGN UNIT 023
MILPITAS STATION

WINDOW DETAILS
SHEET 2 OF 3

CADD FILENAME C700–S–DB–A725.dwg
SIZE D | SCALE 3"=1'–0"
CONTRACT NO. C700 | REV. 0
AREA CODE DB | SHEET NO. A725 | PAGE NO. 0517

JosephG Jun 26, 2013 – 3:31pm G:\Current Projects\VTA–Berryessa Extension Project\Station – Milpitas\CAD\Drawings Out\13–0710 C700 Milpitas Station – RFC Submit\C700–S–DB–A725.dwg

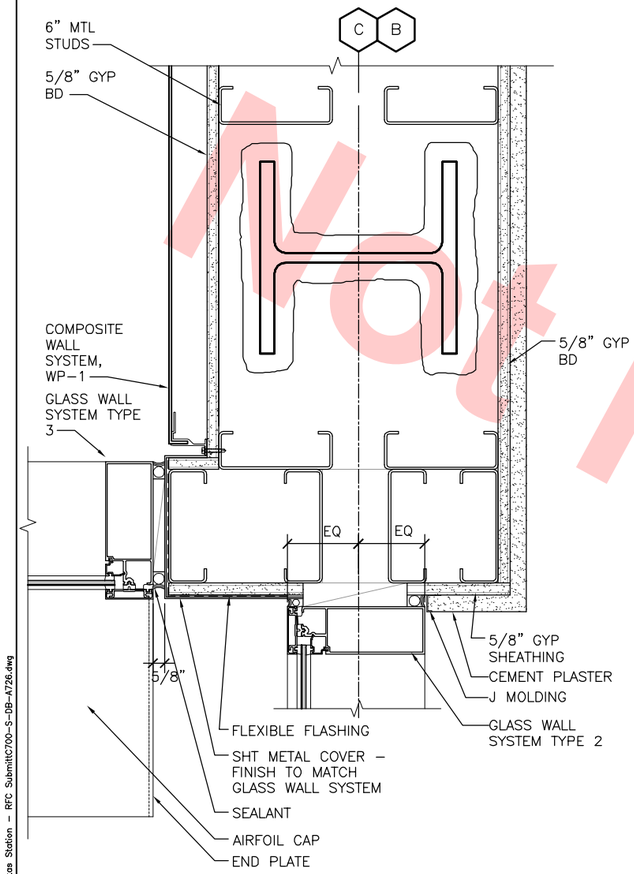

JAMB 5
SCALE: 3"=1'-0"
DB-A726 DB-A563 DB-A722

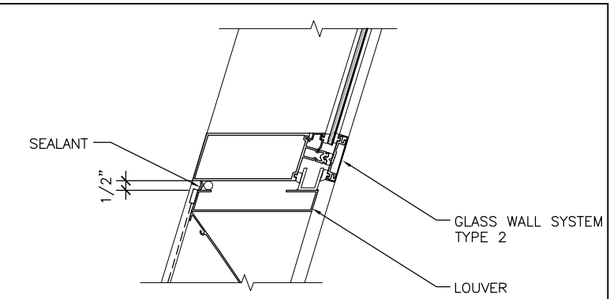

HORIZONTAL MULLION 4
SCALE: 3"=1'-0"
DB-A726 DB-A522 DB-A722

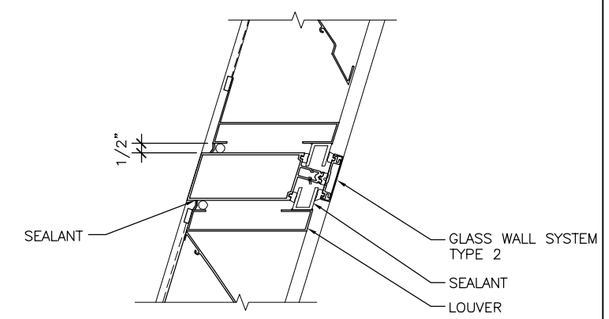

HORIZONTAL MULLION 8
SCALE: 3"=1'-0"
DB-A726 DB-A522 DB-A722

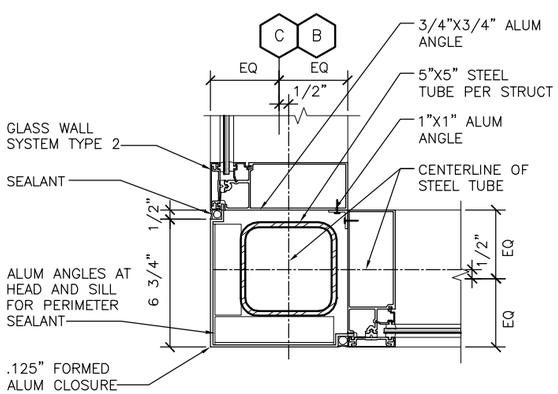

CORNER MULLION 9
SCALE: 3"=1'-0"
DB-A726 DB-A126X DB-A722

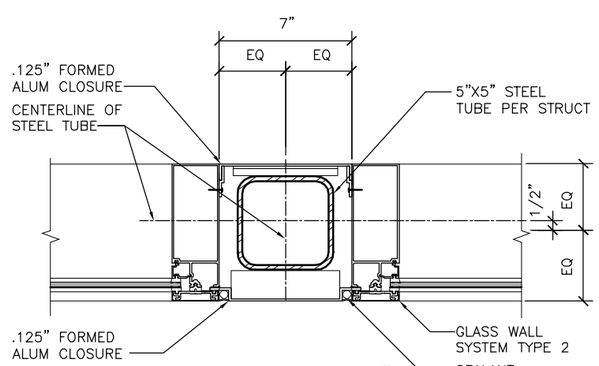

MULLION 10
SCALE: 3"=1'-0"
DB-A726 DB-A722

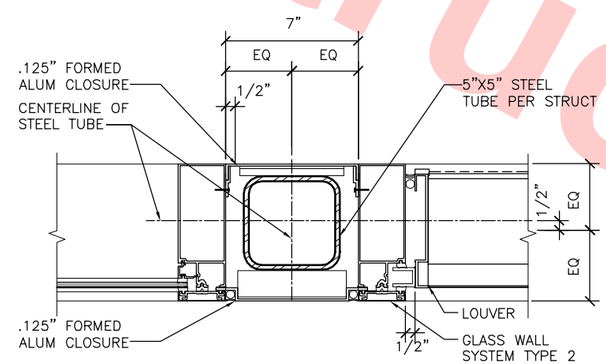

MULLION 11
SCALE: 3"=1'-0"
DB-A726 DB-A126X DB-A722

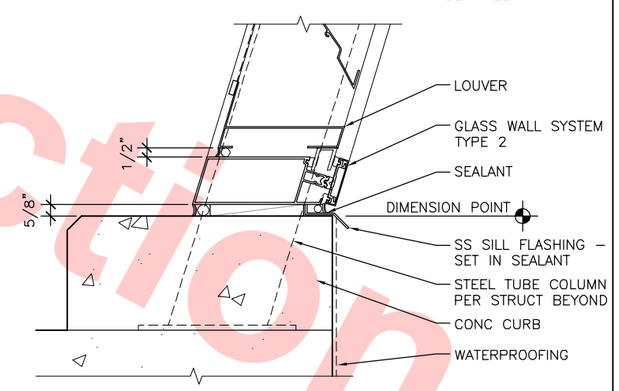

SILL 12
SCALE: 3"=1'-0"
DB-A726 DB-A522 DB-A722

Santa Clara Valley Transportation Authority

____NO EXCEPTIONS TAKEN (NET)
____MAKE CORRECTIONS NOTED (MCN)
____AMEND AND RESUBMIT (A/R)

Any action shown above is subject to the terms of the contract and does not relieve the Contractor of any of its obligations under the contract, including design and detailing.

Contract No.: DB11002F

By: _____ **Date:** _____

Not For Construction

REV	DATE	BY	SUB	APP	DESCRIPTION
0	20130710				READINESS FOR CONSTRUCTION

DESIGNED BY S. DEBNATH
DRAWN BY R. COLLADO
CHECKED BY E. BALLADA
IN CHARGE R. BARLAAN
DATE 20130710

LICENSED ARCHITECT SAMESH DEBNATH No. C21523 STATE OF CALIFORNIA

Skanska Shimmick Herzog
1436 California Circle Milpitas, California 95035
A Joint Venture

Anil Verma Associates, Inc.
1970 Broadway, Suite 535 Oakland, CA 94612
Phone: (510) 835-2537 Fax: (510) 535-2339
SUBMITTED

Lockwood, Andrews & Newnam, Inc. A LAN & BALY COMPANY
T·Y·LIN INTERNATIONAL
APPROVED

VTA BART SILICON VALLEY
BART SILICON VALLEY BERRYESSA EXTENSION

LINE, TRACK, STATIONS AND SYSTEMS
DESIGN UNIT 023
MILPITAS STATION

WINDOW DETAILS
SHEET 3 OF 3

CADD FILENAME C700-S-DB-A726.dwg
SIZE D | SCALE 3"=1'-0"
CONTRACT NO. C700 | REV. 0
AREA CODE DB | SHEET NO. A726 | PAGE NO. 0518

JosephG Jun 26, 2013 – 5:25pm G:\Current Projects\VTA-Berryessa Extension Project\Station – Milpitas\CAD\Drawings Out\13-0710 C700 Milpitas Station – RFC Submit\C700-S-DB-A726.dwg

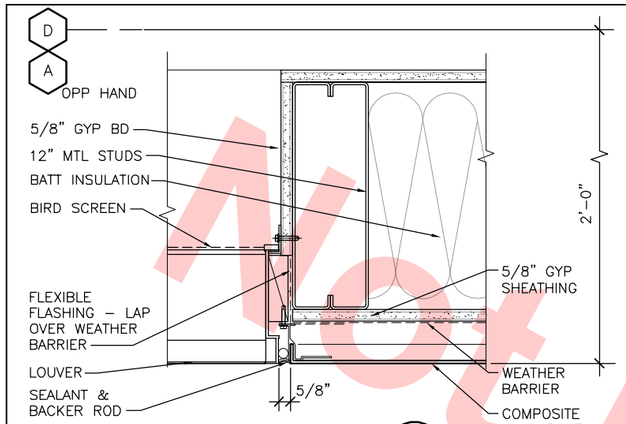

LOUVER JAMB 1 DB-A727 DB-A723
SCALE: 3" = 1'-0"

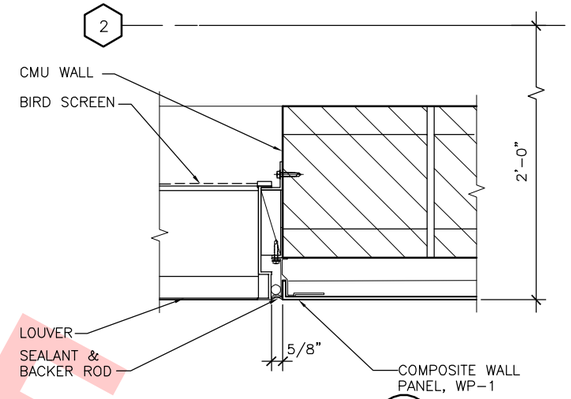

LOUVER JAMB 2 DB-A727 DB-A723
SCALE: 3" = 1'-0"

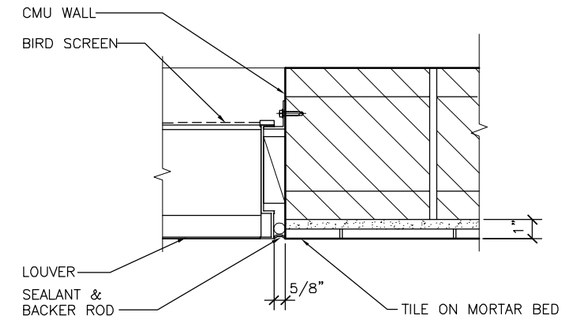

LOUVER JAMB 3 DB-A727 DB-A723
SCALE: 3" = 1'-0"

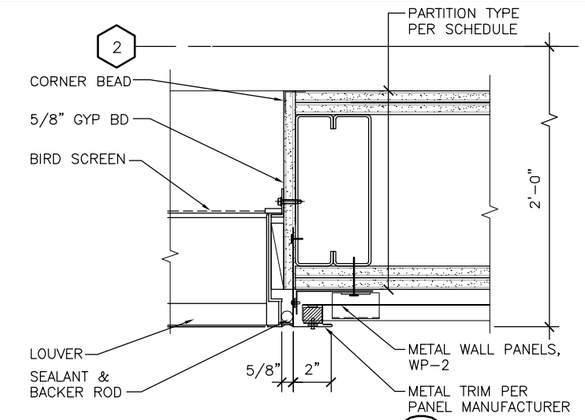

LOUVER JAMB 4 DB-A727 DB-A723
SCALE: 3" = 1'-0"

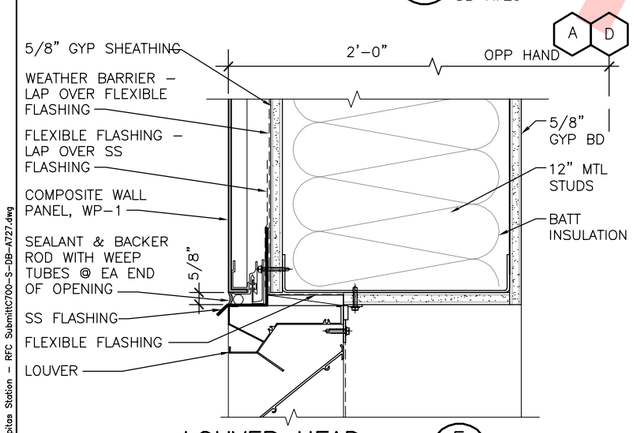

LOUVER HEAD 5 DB-A727 DB-A723
SCALE: 3" = 1'-0"

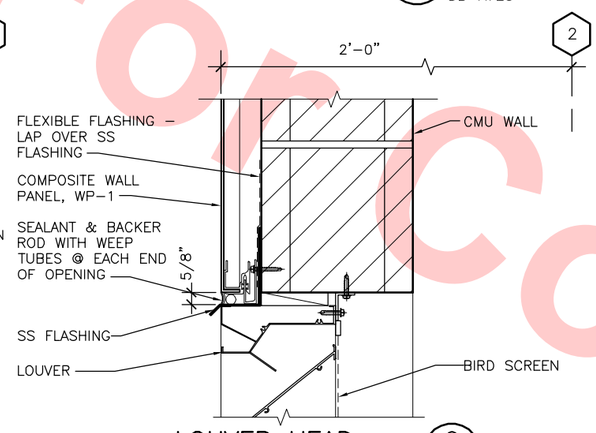

LOUVER HEAD 6 DB-A727 DB-A723
SCALE: 3" = 1'-0"

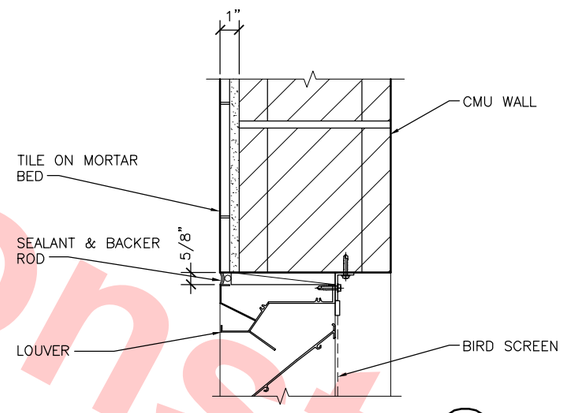

LOUVER HEAD 7 DB-A727 DB-A723
SCALE: 3" = 1'-0"

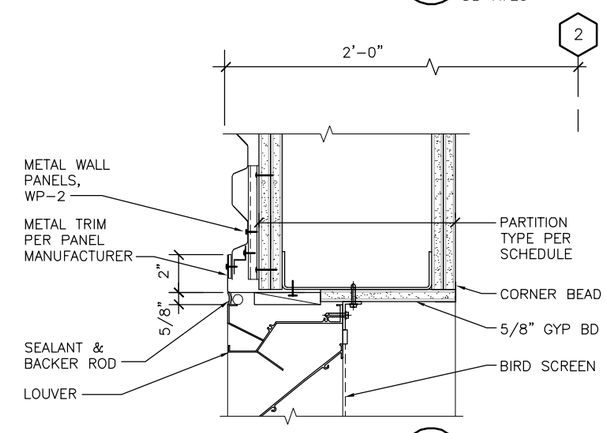

LOUVER HEAD 8 DB-A727 DB-A723
SCALE: 3" = 1'-0"

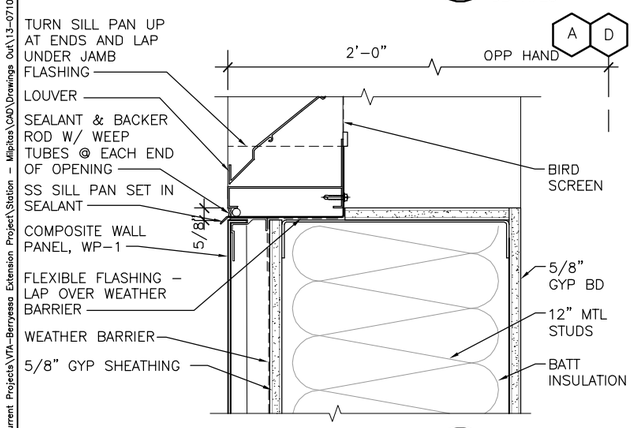

LOUVER SILL 9 DB-A727 DB-A723
SCALE: 3" = 1'-0"

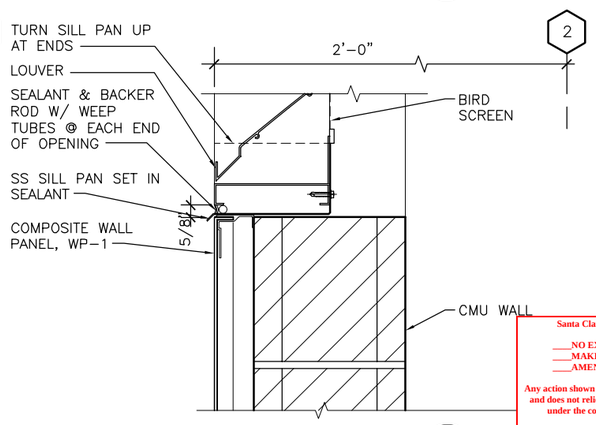

LOUVER SILL 10 DB-A727 DB-A723
SCALE: 3" = 1'-0"

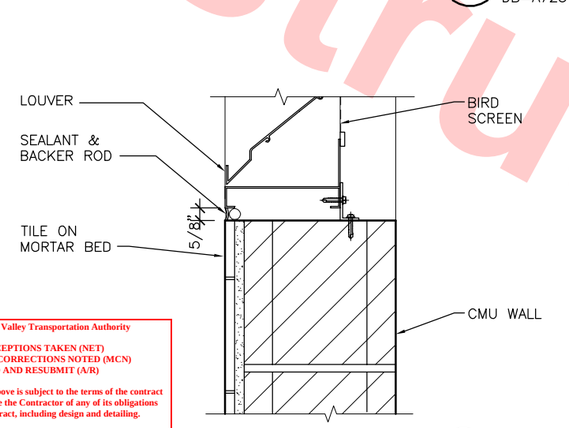

LOUVER SILL 11 DB-A727 DB-A723
SCALE: 3" = 1'-0"

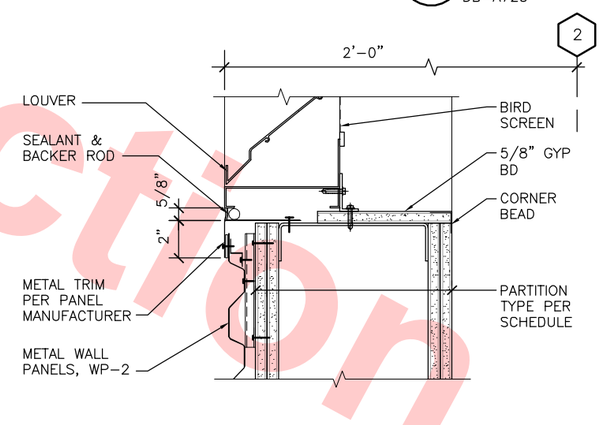

LOUVER SILL 12 DB-A727 DB-A723
SCALE: 3" = 1'-0"

Santa Clara Valley Transportation Authority
____NO EXCEPTIONS TAKEN (NET)
____MAKE CORRECTIONS NOTED (MCN)
____AMEND AND RESUBMIT (A/R)
Any action shown above is subject to the terms of the contract and does not relieve the Contractor of any of its obligations under the contract, including design and detailing.
Contract No.: DB11002F
By: _____ Date: _____

Not For Construction

REV	DATE	BY	SUB	APP	DESCRIPTION
0	20130710				READINESS FOR CONSTRUCTION

DESIGNED BY S. DEBNATH
DRAWN BY G. PUTNEY
CHECKED BY E. BALLADA
IN CHARGE R. BARLAAN
DATE 20130710

LICENSED ARCHITECT SUDESH DEBNATH No. C21523 STATE OF CALIFORNIA

Skanska Shimmick Herzog
1436 California Circle
Milpitas, California 95035
A Joint Venture

Anil Verma Associates, Inc.
1970 Broadway, Suite 535, Oakland, CA 94612
Phone: (510) 835-2537 Fax: (510) 835-2339
SUBMITTED

Lockwood, Andrews & Newnam, Inc. A LEO A DALY COMPANY
T·Y·LIN INTERNATIONAL
APPROVED

VTA BART SILICON VALLEY
BART SILICON VALLEY BERRYESSA EXTENSION

LINE, TRACK, STATIONS AND SYSTEMS
DESIGN UNIT 023
MILPITAS STATION

LOUVER DETAILS
SHEET 1 OF 3

CADD FILENAME C700-S-DB-A727.dwg
SIZE D | SCALE 3"=1'-0"
CONTRACT NO. C700 | REV. 0
AREA CODE DB | SHEET NO. A727 | PAGE NO. 0519

JosephG Jun 26, 2013 – 3:32pm G:\Current Projects\VTA-Berryessa Extension Project\Station – Milpitas\CAD\Drawings Out\13-0710 C700 Milpitas Station – RFC Submit\C700-S-DB-A727.dwg

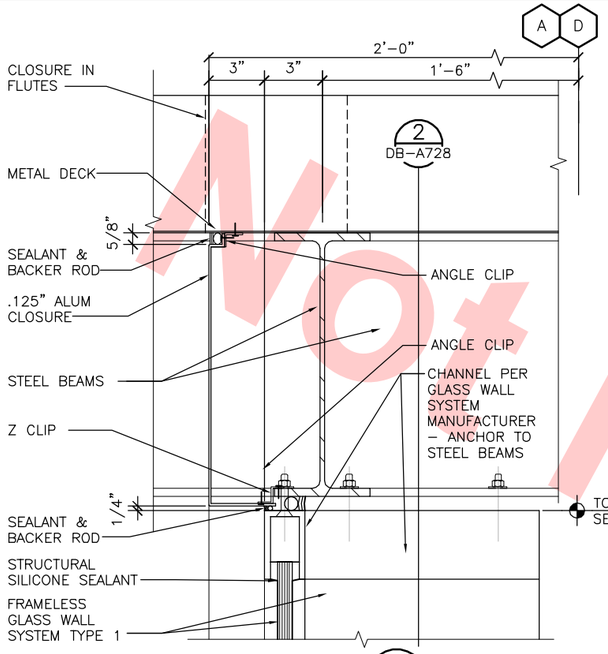

HEAD
SCALE: 3"=1'-0"
1 DB-A728 DB-A522 DB-A721

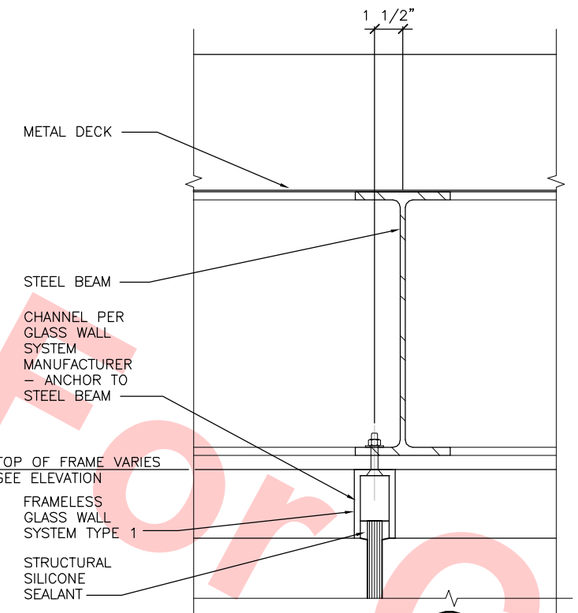

HEAD
SCALE: 3"=1'-0"
2 DB-A728

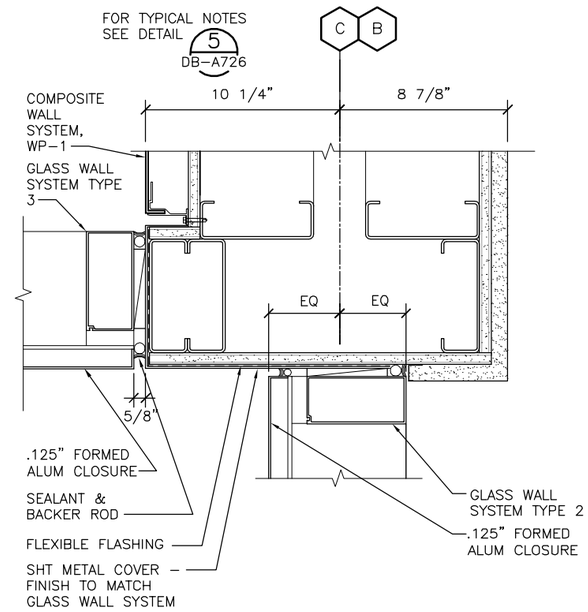

JAMB
SCALE: 3"=1'-0"
3 DB-A728 DB-A722

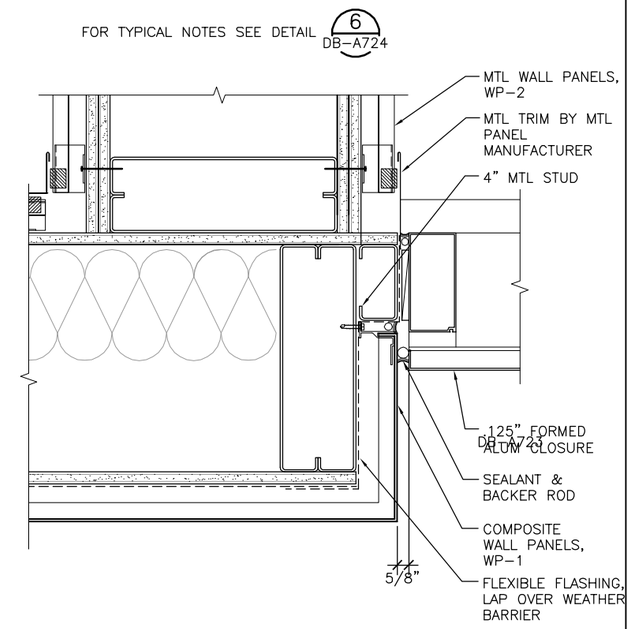

JAMB
SCALE: 3"=1'-0"
4 DB-A728 DB-A721

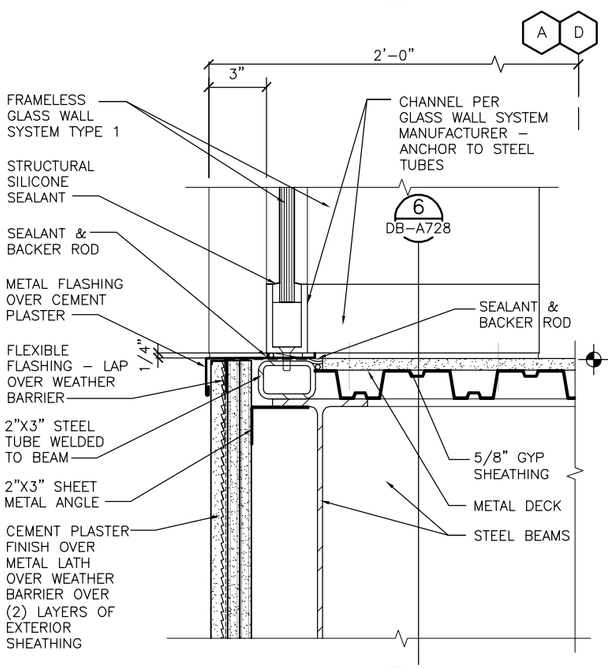

SILL
SCALE: 3"=1'-0"
5 DB-A728 DB-A721

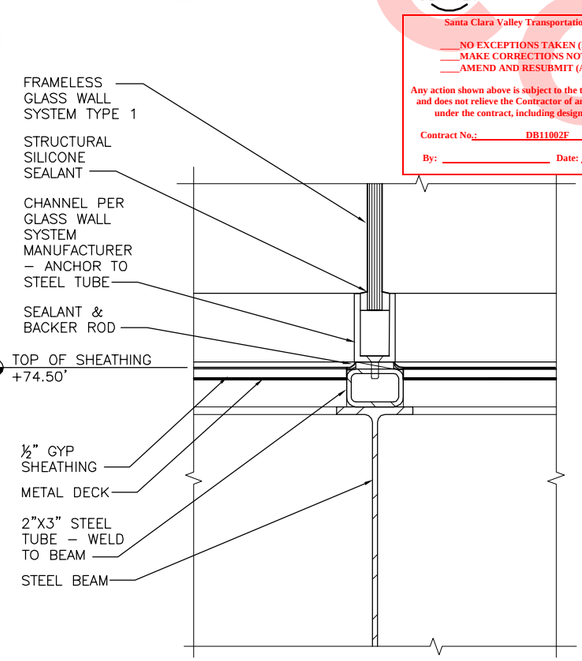

SILL
SCALE: 3"=1'-0"
6 DB-A728

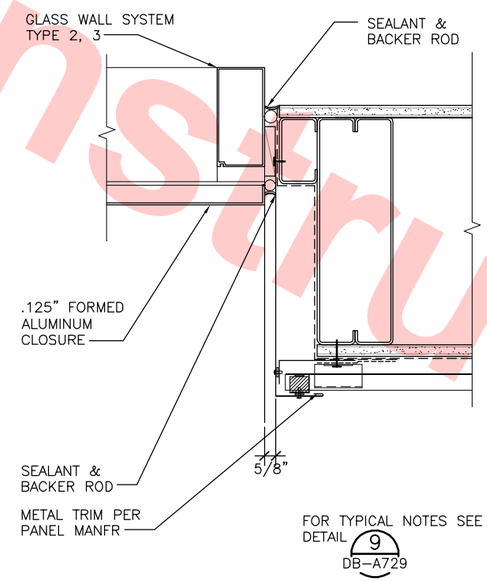

JAMB
SCALE: 3"=1'-0"
7 DB-A728 DB-A721

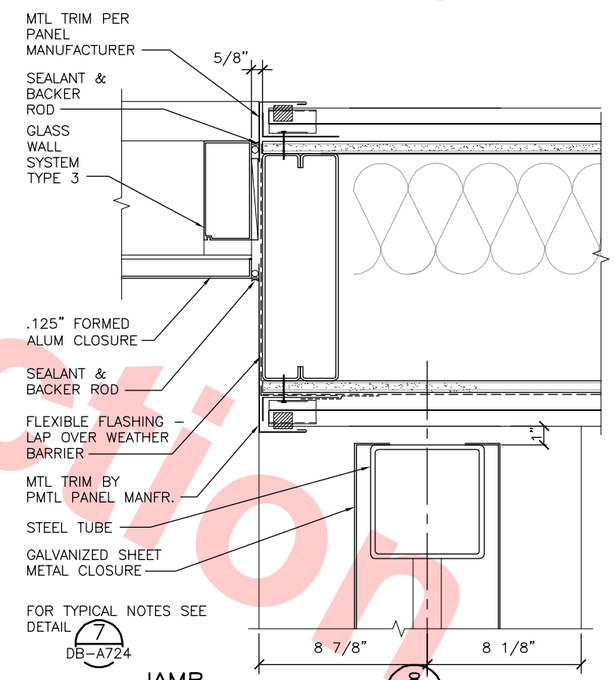

JAMB
SCALE: 3"=1'-0"
8 DB-A728 DB-A721

Santa Clara Valley Transportation Authority
___NO EXCEPTIONS TAKEN (NET)
___MAKE CORRECTIONS NOTED (MCN)
___AMEND AND RESUBMIT (A/R)
Any action shown above is subject to the terms of the contract and does not relieve the Contractor of any of its obligations under the contract, including design and detailing.
Contract No.: DB11002F
By: _____ Date: _____

Not for Construction

REV	DATE	BY	SUB	APP	DESCRIPTION
0	20130710				READINESS FOR CONSTRUCTION

DESIGNED BY S. DEBNATH
DRAWN BY R. COLLADO
CHECKED BY E. BALLADA
IN CHARGE R. BARLAAN
DATE 20130710

LICENSED ARCHITECT SOMESH DEBNATH No. C21523 STATE OF CALIFORNIA

Skanska Shimmick Herzog
1436 California Circle
Milpitas, California 95035
A Joint Venture

Anil Verma Associates, Inc.
1970 Broadway, Suite 535 Oakland, CA 94612
Phone: (510) 835-2537 Fax: (510) 835-2339
SUBMITTED

Lockwood, Andrews & Newnam, Inc. A LAN & BAKER COMPANY
T·Y·LIN INTERNATIONAL
APPROVED

VTA BART SILICON VALLEY
BART SILICON VALLEY BERRYESSA EXTENSION

LINE, TRACK, STATIONS AND SYSTEMS DESIGN UNIT 023
MILPITAS STATION

LOUVER DETAILS
SHEET 2 OF 3

CADD FILENAME C700-S-DB-A728.dwg
SIZE D | SCALE 3"=1'-0"
CONTRACT NO. C700 | REV. 0
AREA CODE DB | SHEET NO. A728 | PAGE NO. 0520

JosephG Jun 26, 2013 – 3:34pm G:\Current Projects\VTA-Berryessa Extension Project\Station – Milpitas\CAD\Drawings Out\13-0710 C700 Milpitas Station – RFC Submit\C700-S-DB-A728.dwg

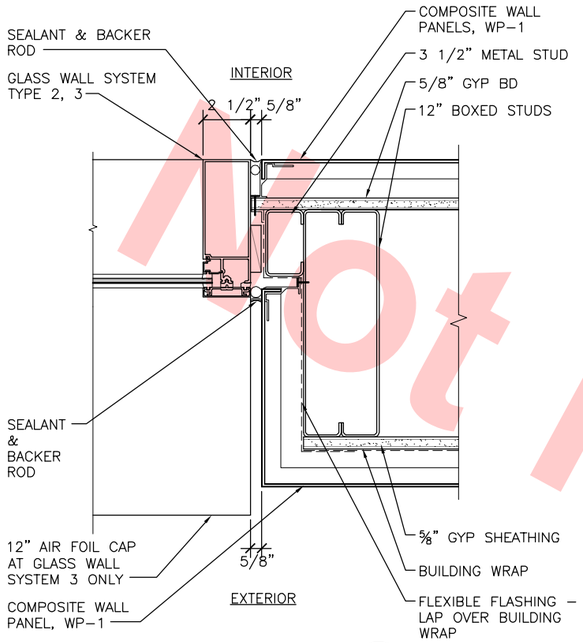

JAMB 1
SCALE: 3"=1'-0"
DB-A729 DB-A563 DB-A721

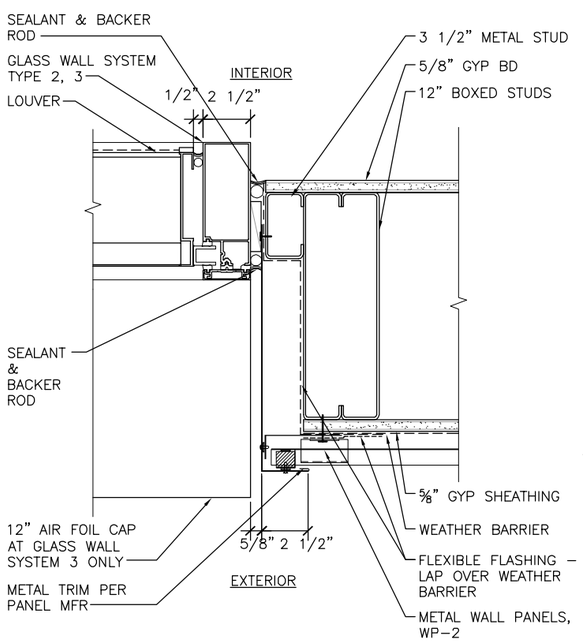

JAMB 9
SCALE: 3"=1'-0"
DB-A729 DB-A721

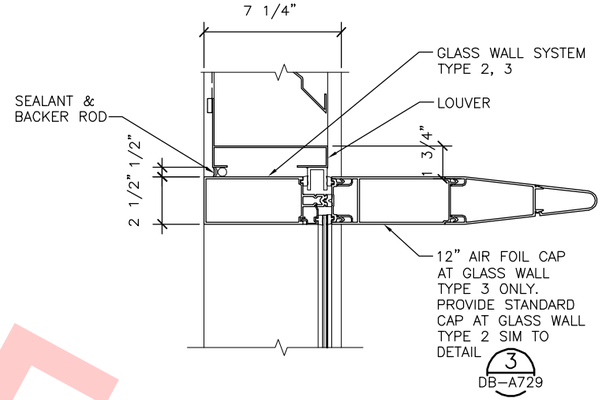

HORIZONTAL MULLION 2
SCALE: 3"=1'-0"
DB-A729 DB-A526 DB-A721

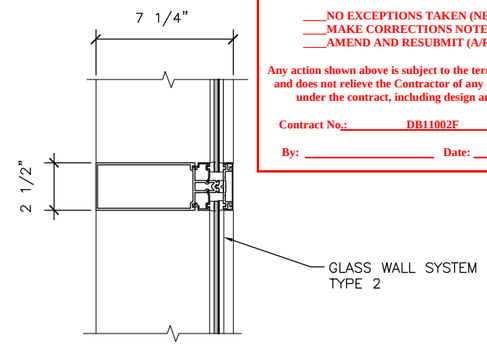

HORIZONTAL MULLION 3
SCALE: 3"=1'-0"
DB-A729 DB-A721

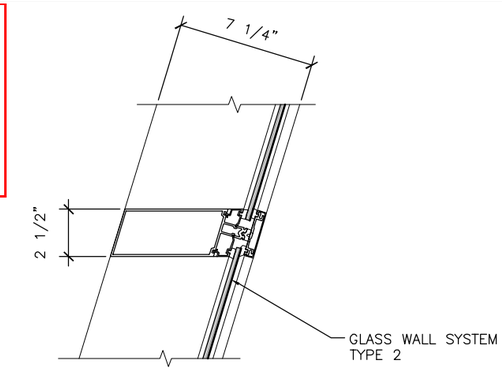

HORIZONTAL MULLION 4
SCALE: 3"=1'-0"
DB-A729 DB-A522 DB-A722

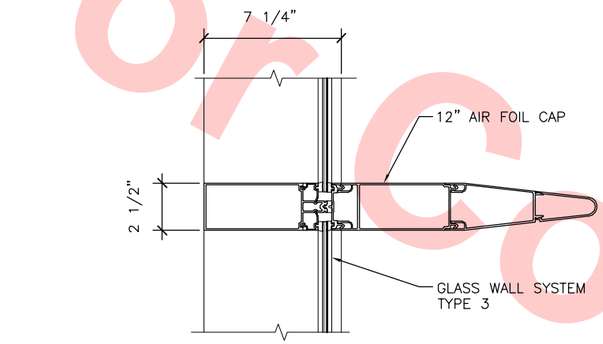

HORIZONTAL MULLION 6
SCALE: 3"=1'-0"
DB-A729 DB-A521 DB-A526 DB-A721

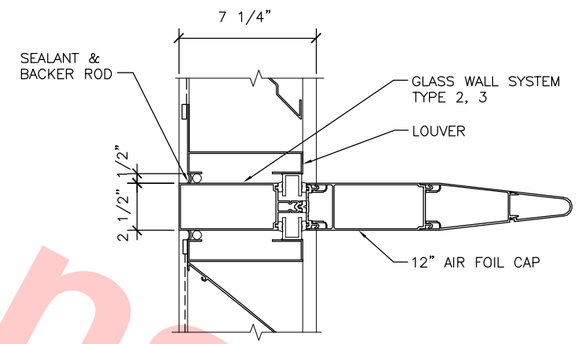

HORIZONTAL MULLION 7
SCALE: 3"=1'-0"
DB-A729 DB-A521 DB-A526 DB-A721

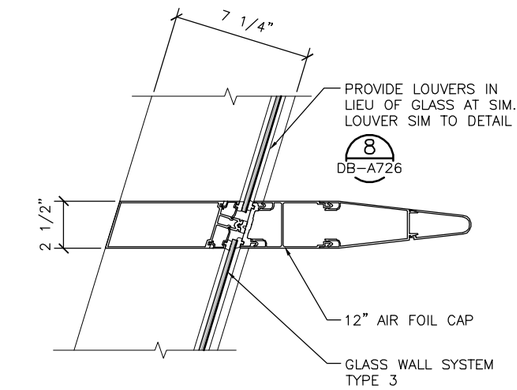

HORIZONTAL MULLION 8
SCALE: 3"=1'-0"
DB-A729 DB-A521 DB-A722

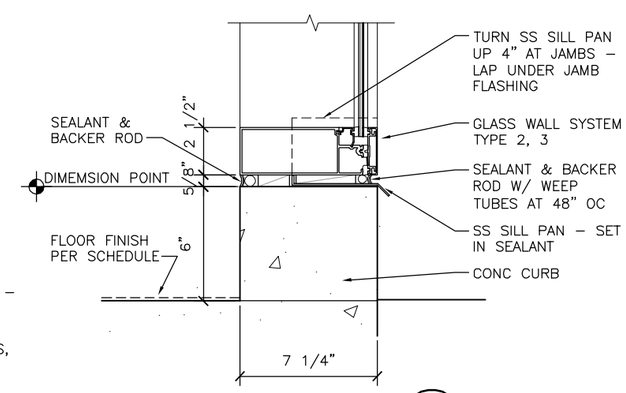

SILL 10
SCALE: 3"=1'-0"
DB-A729 DB-A526 DB-A721 DB-A722

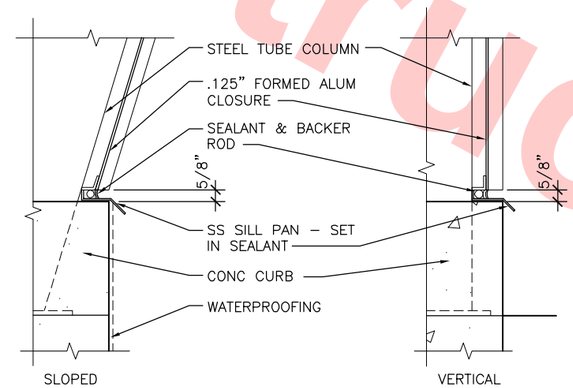

SILL 11
SCALE: 3"=1'-0"
DB-A729 DB-A721 DB-A722

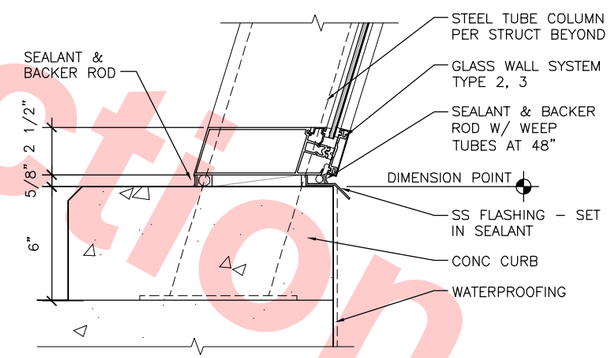

SILL 12
SCALE: 3"=1'-0"
DB-A729 DB-A612 DB-A722

Santa Clara Valley Transportation Authority

___NO EXCEPTIONS TAKEN (NET)
___MAKE CORRECTIONS NOTED (MCN)
___AMEND AND RESUBMIT (A/R)

Any action shown above is subject to the terms of the contract and does not relieve the Contractor of any of its obligations under the contract, including design and detailing.

Contract No.: DB11002F

By: _____ Date: _____

Not For Construction

REV	DATE	BY	SUB	APP	DESCRIPTION
0	20130710				READINESS FOR CONSTRUCTION

DESIGNED BY S. DEBNATH
DRAWN BY R. COLLADO
CHECKED BY E. BALLADA
IN CHARGE R. BARLAAN
DATE 20130710

LICENSED ARCHITECT SOMESH DEBNATH No. C21523 STATE OF CALIFORNIA

Skanska Shimmick Herzog
1436 California Circle
Milpitas, California 95035
A Joint Venture

Anil Verma Associates, Inc.
1970 Broadway, Suite 325, Oakland, CA 94612
Phone: (510) 535-2537 Fax: (510) 535-2339

SUBMITTED

Lockwood, Andrews & Newnam, Inc. A LEO A DALY COMPANY
T·Y·LIN INTERNATIONAL

APPROVED

VTA BART SILICON VALLEY
BART SILICON VALLEY BERRYESSA EXTENSION

LINE, TRACK, STATIONS AND SYSTEMS
DESIGN UNIT 023
MILPITAS STATION

LOUVER DETAILS
SHEET 3 OF 3

CADD FILENAME C700-S-DB-A729.dwg
SIZE D | SCALE 3"=1'-0"
CONTRACT NO. C700 | REV. 0
AREA CODE DB | SHEET NO. A729 | PAGE NO. 0521

JosephG Jun 26, 2013 – 3:34pm G:\Current Projects\VTA-Berryessa Extension Project\Station – Milpitas\CAD\Drawings Out\13-0710 C700 Milpitas Station – RFC Submit\C700-S-DB-A729.dwg

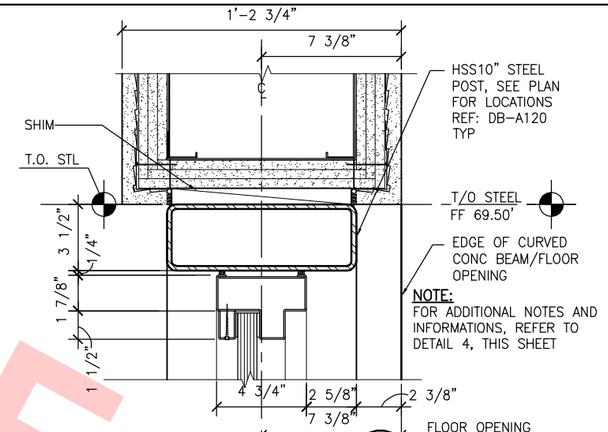

NOTE:
FOR ADDITIONAL NOTES AND INFORMATIONS, REFER TO DETAIL 4, THIS SHEET

HEAD DETAIL 2
SCALE: 3"=1'-0"
DB-A730 DB-A512

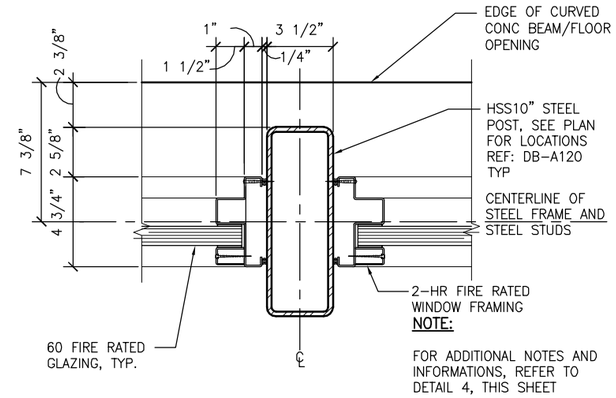

NOTE:
FOR ADDITIONAL NOTES AND INFORMATIONS, REFER TO DETAIL 4, THIS SHEET

MULLION DETAIL 3
SCALE: 3"=1'-0"
DB-A730 DB-A512 DB-A554

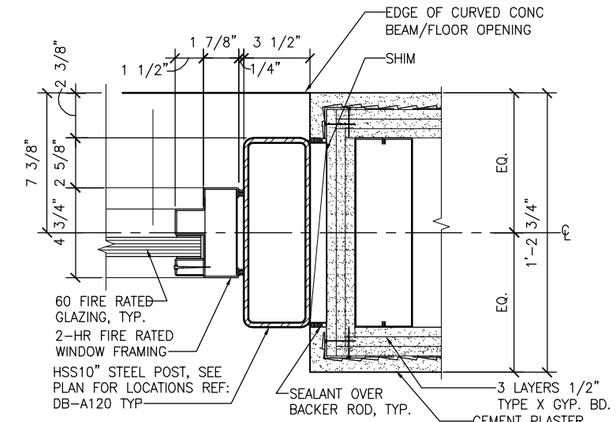

JAMB DETAIL 4
SCALE: 3"=1'-0"
DB-A730 DB-A512 DB-A554

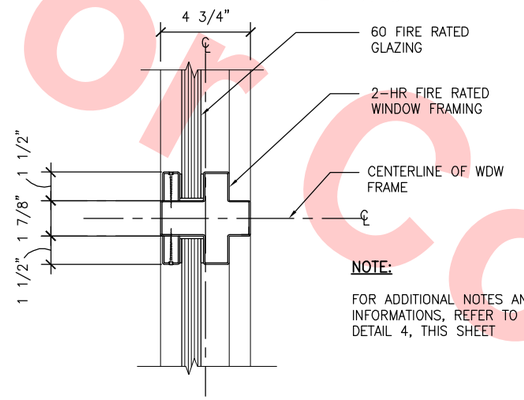

NOTE:
FOR ADDITIONAL NOTES AND INFORMATIONS, REFER TO DETAIL 4, THIS SHEET

MULLION DETAIL 6
SCALE: 3"=1'-0"
DB-A730 DB-A512

NOTE:
FOR ADDITIONAL NOTES AND INFORMATIONS, REFER TO DETAIL 4, THIS SHEET

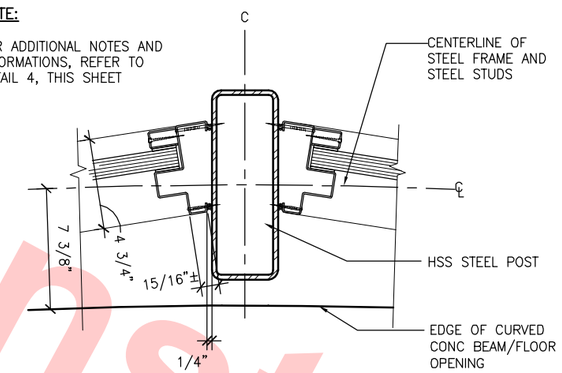

MULLION DETAIL 7
SCALE: 3"=1'-0"
DB-A730 DB-A512 DB-A554

NOTE:
FOR ADDITIONAL NOTES AND INFORMATIONS, REFER TO DETAIL 4 AND 6, THIS SHEET

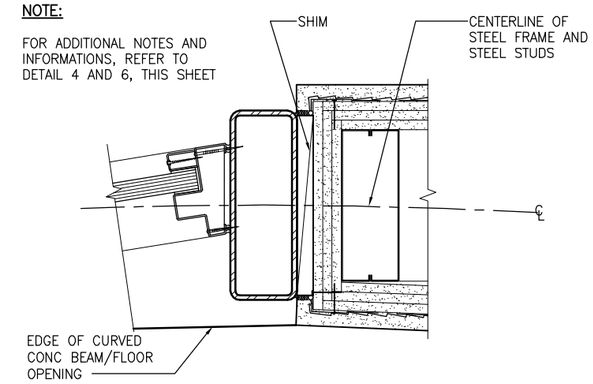

JAMB DETAIL 8
SCALE: 3"=1'-0"
DB-A730 DB-A512

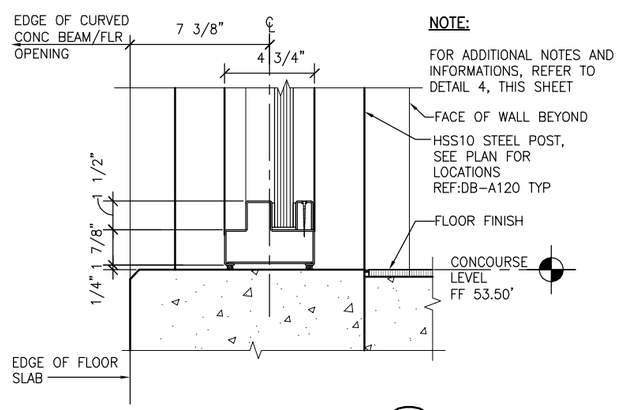

NOTE:
FOR ADDITIONAL NOTES AND INFORMATIONS, REFER TO DETAIL 4, THIS SHEET
FACE OF WALL BEYOND
HSS10 STEEL POST, SEE PLAN FOR LOCATIONS REF:DB-A120 TYP
FLOOR FINISH
CONCOURSE LEVEL FF 53.50'

SILL DETAIL 10
SCALE: 3"=1'-0"
DB-A730 DB-A512

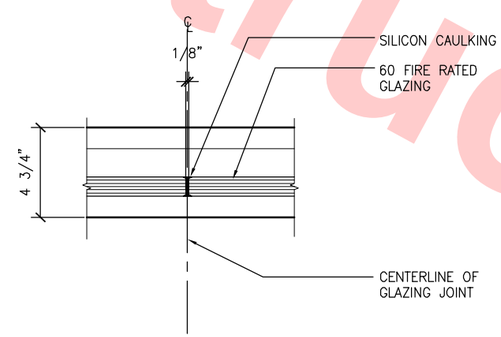

GLASS JOINT DETAIL 11
SCALE: 3"=1'-0"
DB-A726 DB-A512

Santa Clara Valley Transportation Authority

____NO EXCEPTIONS TAKEN (NET)
____MAKE CORRECTIONS NOTED (MCN)
____AMEND AND RESUBMIT (A/R)

Any action shown above is subject to the terms of the contract and does not relieve the Contractor of any of its obligations under the contract, including design and detailing.

Contract No.: DB11002F

By: _____ Date: _____

Not For Construction

REV	DATE	BY	SUB	APP	DESCRIPTION
0	20130710				READINESS FOR CONSTRUCTION

DESIGNED BY S. DEBNATH
DRAWN BY EAB/RC/PPB
CHECKED BY E. BALLADA
IN CHARGE R. BARLAAN
DATE 20130710

LICENSED ARCHITECT SANJEEV DEBNATH No. C21523 STATE OF CALIFORNIA

Skanska Shimmick Herzog
1436 California Circle Milpitas, California 95035
A Joint Venture

Anil Verma Associates, Inc.
1970 Broadway, Suite 525 Oakland, CA 94612
Phone: (510) 835-2537 Fax: (510) 835-2339
SUBMITTED

Lockwood, Andrews & Newnam, Inc. A LEO A DALY COMPANY
T·Y·LIN INTERNATIONAL
APPROVED

VTA BART SILICON VALLEY
BART SILICON VALLEY BERRYESSA EXTENSION

LINE, TRACK, STATIONS AND SYSTEMS
MILPITAS STATION
WINDOW DETAILS

CADD FILENAME C700-S-DB-A730.dwg
SIZE D | SCALE 3"=1'-0"
CONTRACT NO. C700 | REV. 0
AREA CODE DB | SHEET NO. A730 | PAGE NO. 0522

JosephG Jun 26, 2013 – 3:35pm G:\Current Projects\VTA-Berryessa Extension Project\Station – Milpitas\CAD\Drawings Out\13-0710 C700 Milpitas Station – RFC Submit\C700-S-DB-A730.dwg

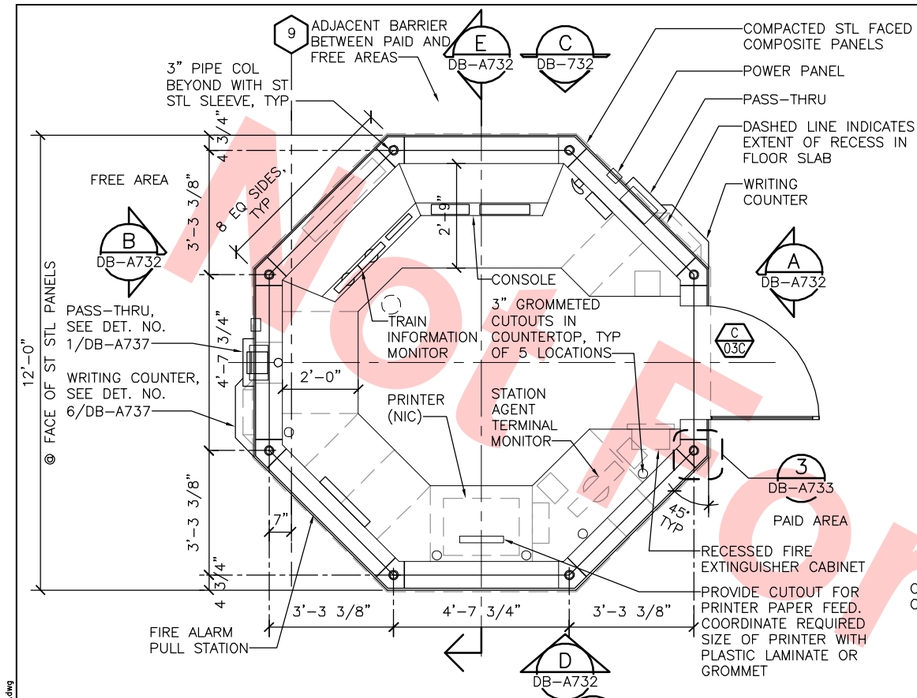

FLOOR PLAN 1 DB-A731
1/2"=1'-0"

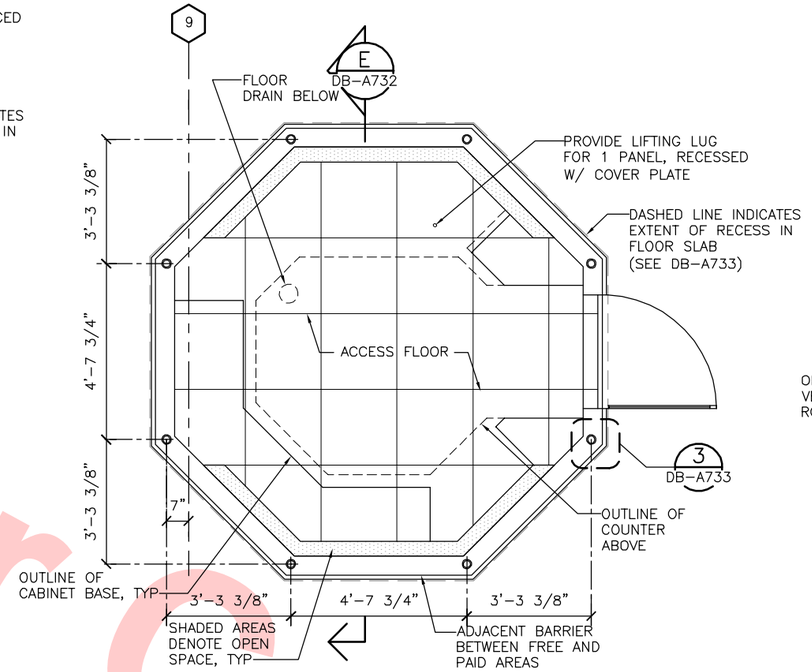

PLAN AT ACCESS FLOOR 2 DB-A731
1/2"=1'-0"

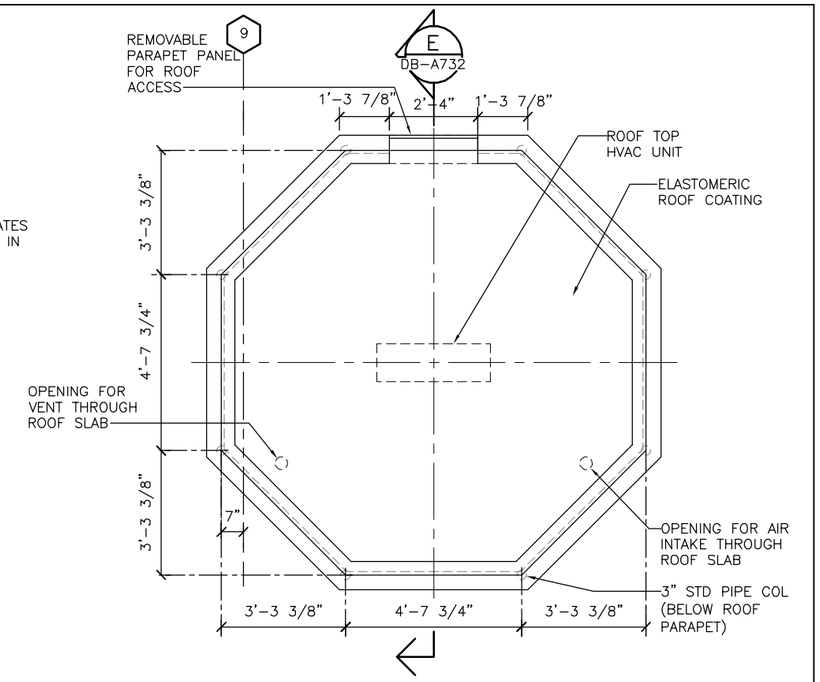

ROOF PLAN 3 DB-A731
1/2"=1'-0"

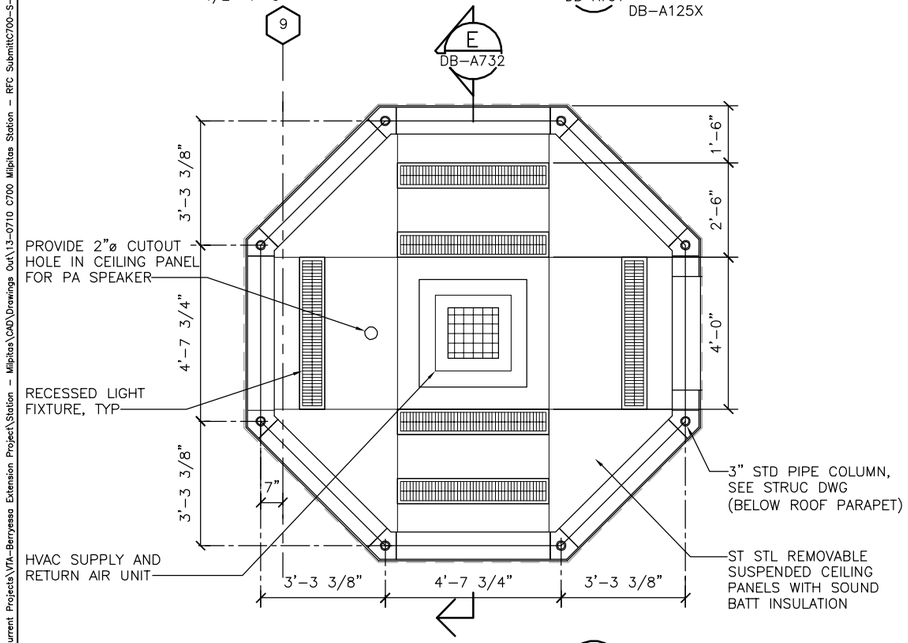

REFLECTED CEILING PLAN 4 DB-A731
1/2"=1'-0"

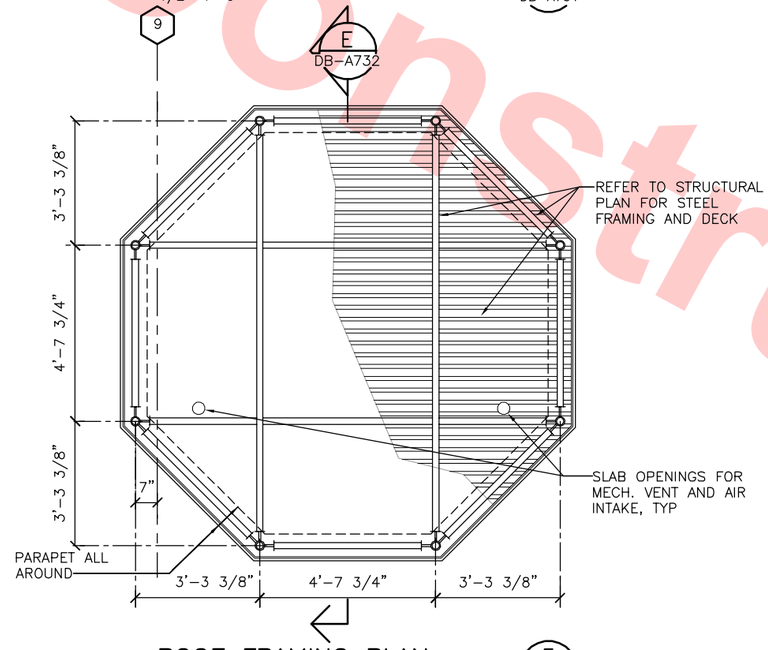

ROOF FRAMING PLAN 5 DB-A731
1/2"=1'-0"

Santa Clara Valley Transportation Authority

____NO EXCEPTIONS TAKEN (NET)
____MAKE CORRECTIONS NOTED (MCN)
____AMEND AND RESUBMIT (A/R)

Any action shown above is subject to the terms of the contract and does not relieve the Contractor of any of its obligations under the contract, including design and detailing.

Contract No.: DB11002F

By: _____ Date: _____

1' 0' 1' 2' 3' 4' 5'
GRAPHIC SCALE

Not For Construction

REV	DATE	BY	SUB	APP	DESCRIPTION
0	20130710				READINESS FOR CONSTRUCTION

DESIGNED BY S. DEBNATH
DRAWN BY R. COLLADO
CHECKED BY E. BALLADA
IN CHARGE R. BARLAAN
DATE 20130710

LICENSED ARCHITECT SOMESH DEBNATH No. C21523 STATE OF CALIFORNIA

Skanska Shimmick Herzog
1436 California Circle
Milpitas, California 95035
A Joint Venture

Anil Verma Associates, Inc.
1970 Broadway, Suite 535 Oakland, CA 94612
Phone: (510) 835-2537 Fax: (510) 835-2339
SUBMITTED

Lockwood, Andrews & Newnam, Inc. A LAN & BAYH COMPANY
T·Y·LIN INTERNATIONAL
APPROVED

VTA BART SILICON VALLEY
BART SILICON VALLEY BERRYESSA EXTENSION

LINE, TRACK, STATIONS AND SYSTEMS
DESIGN UNIT 023
MILPITAS STATION
STATION AGENT BOOTH
PLANS

CADD FILENAME C700-S-DB-A731.dwg
SIZE D | SCALE 1/2"=1'-0"
CONTRACT NO. C700 | REV. 0
AREA CODE DB | SHEET NO. A731 | PAGE NO. 0523

JosephG Jun 26, 2013 – 3:37pm G:\Current Projects\VTA-Berryessa Extension Project\Station – Milpitas\CAD\Drawings Out\13-0710 C700 Milpitas Station – RFC Submit\C700-S-DB-A731.dwg

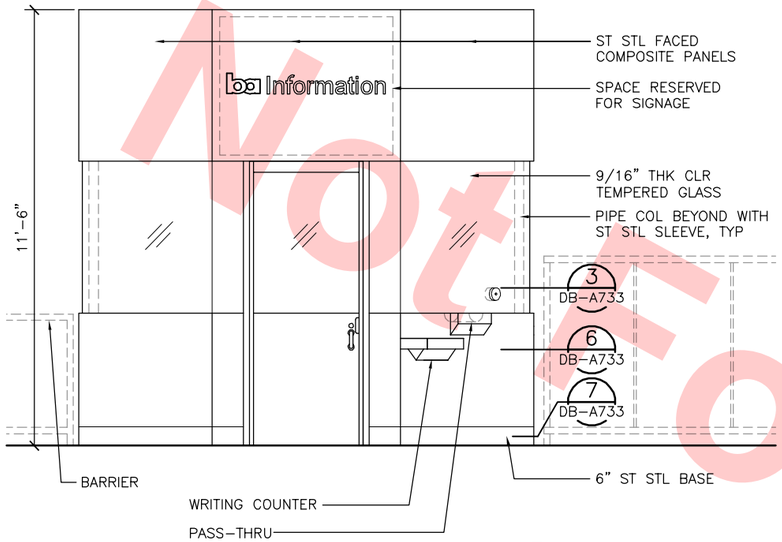

ELEVATION A
1/2"=1'-0"
DB-732 DB-A731

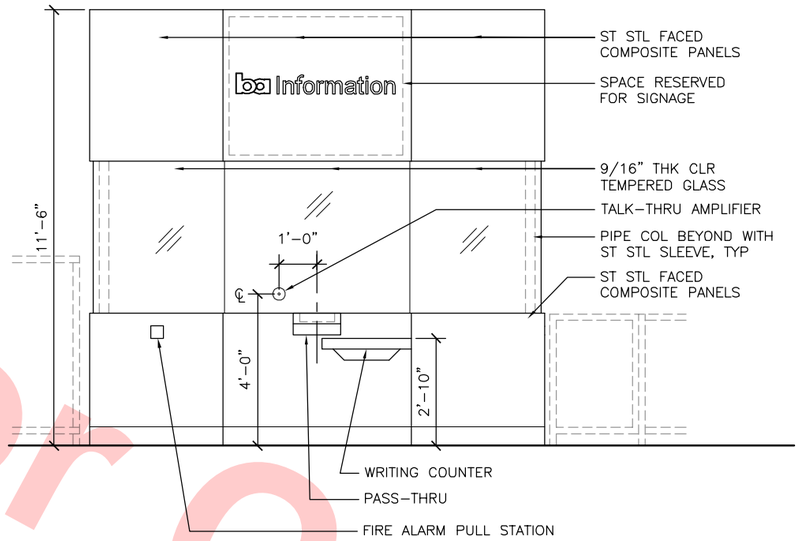

ELEVATION B
1/2"=1'-0"
DB-732 DB-731

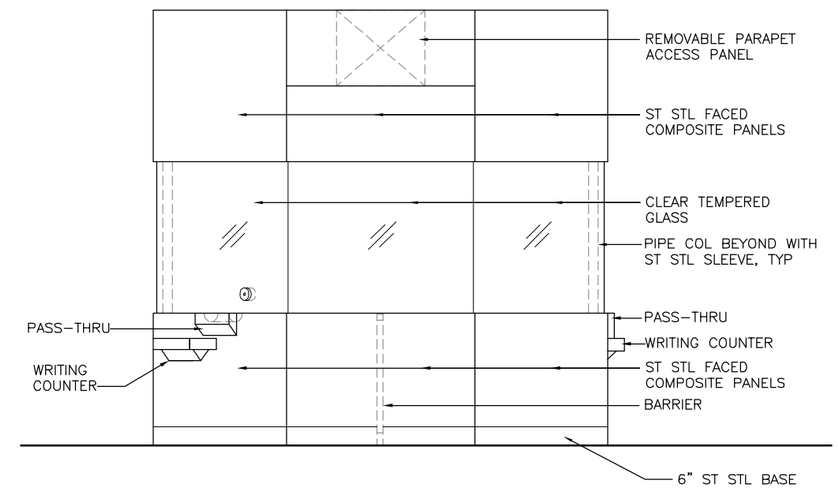

ELEVATION C
1/2"=1'-0"
DB-732 DB-731

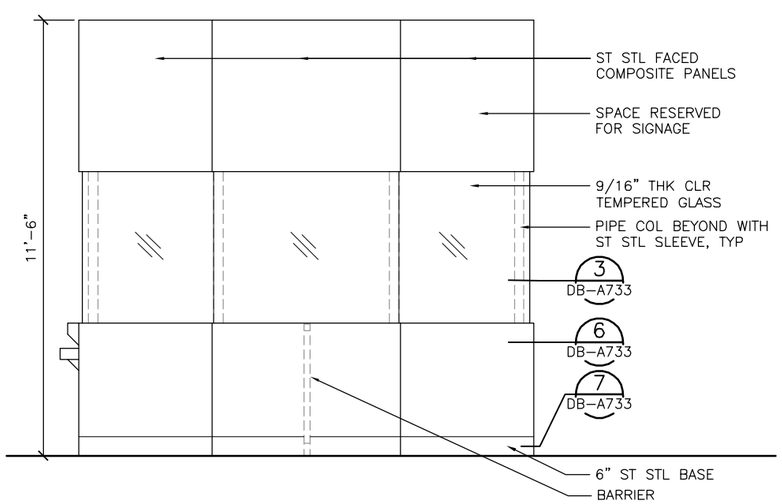

ELEVATION D
1/2"=1'-0"
DB-A732 DB-A731

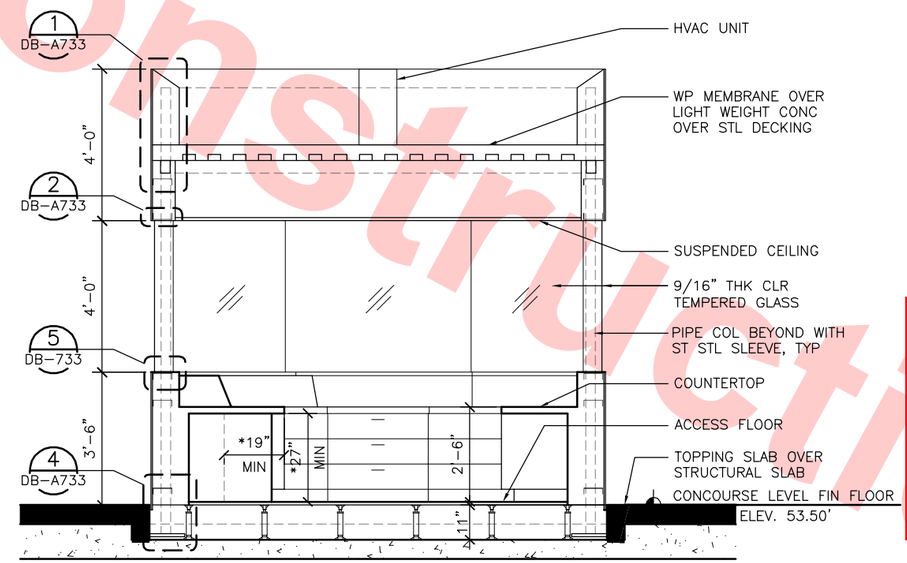

SECTION E
1/2"=1'-0"
DB-A732 DB-A731

NOTE:

*ALL DIMENSIONS FOR COUNTERS MUST COMPLY WITH ALL DISABLED ACCESS REQUIREMENTS. ACCESSIBLE COUNTER TO BE NO MORE HAN 34" AND NO LESS THAN 28"

Santa Clara Valley Transportation Authority

____NO EXCEPTIONS TAKEN (NET)
____MAKE CORRECTIONS NOTED (MCN)
____AMEND AND RESUBMIT (A/R)

Any action shown above is subject to the terms of the contract and does not relieve the Contractor of any of its obligations under the contract, including design and detailing.

Contract No.: DB11002F

By: _____ **Date:** _____

1' 0' 1' 2' 3' 4' 5'
GRAPHIC SCALE

Not For Construction

REV	DATE	BY	SUB	APP	DESCRIPTION
0	20130710				READINESS FOR CONSTRUCTION

DESIGNED BY S. DEBNATH
DRAWN BY R. COLLADO
CHECKED BY E. BALLADA
IN CHARGE R. BARLAAN
DATE 20130710

LICENSED ARCHITECT SOMESH DEBNATH No. C21523 STATE OF CALIFORNIA

Skanska Shimmick Herzog
1436 California Circle
Milpitas, California 95035
A Joint Venture

Anil Verma Associates, Inc.
1970 Broadway, Suite 525, Oakland, CA 94612
Phone: (510) 835-2537 Fax: (510) 835-2339

Lockwood, Andrews & Newnam, Inc. A LEO A DALY COMPANY
T·Y·LIN INTERNATIONAL

SUBMITTED _____
APPROVED _____

VTA BART SILICON VALLEY
BART SILICON VALLEY BERRYESSA EXTENSION

LINE, TRACK, STATIONS AND SYSTEMS
DESIGN UNIT 023
MILPITAS STATION
STATION AGENT BOOTH
ELEVATIONS AND SECTIONS

CADD FILENAME C700-S-DB-A732.dwg
SIZE D | SCALE 1/2"=1'-0"
CONTRACT NO. C700 | REV. 0
AREA CODE DB | SHEET NO. A732 | PAGE NO. 0524

JosephG Jun 26, 2013 – 3:38pm G:\Current Projects\VTA-Berryessa Extension Project\Station – Milpitas\CAD\Drawings Out\13-0710 C700 Milpitas Station – RFC Submit\C700-S-DB-A732.dwg

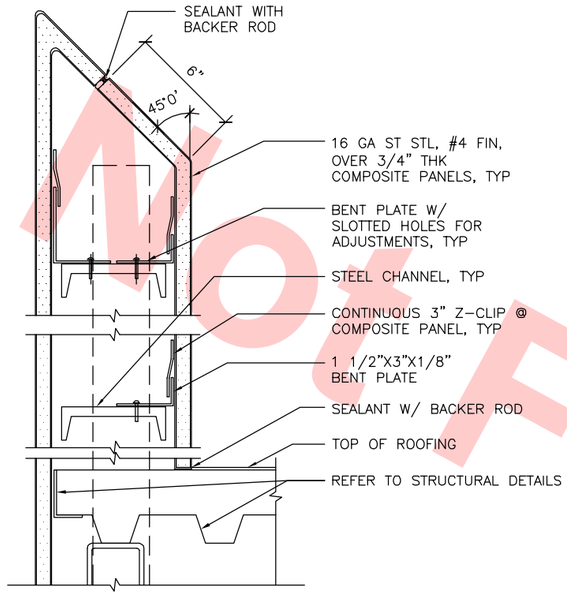

DETAIL AT PARAPET 1 DB-A733 DB-A732
3"=1'-0"

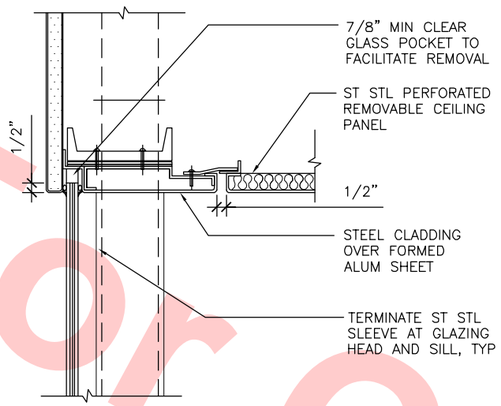

DETAIL AT WINDOW AREA 2 DB-A733 DB-A732
3"=1'-0"

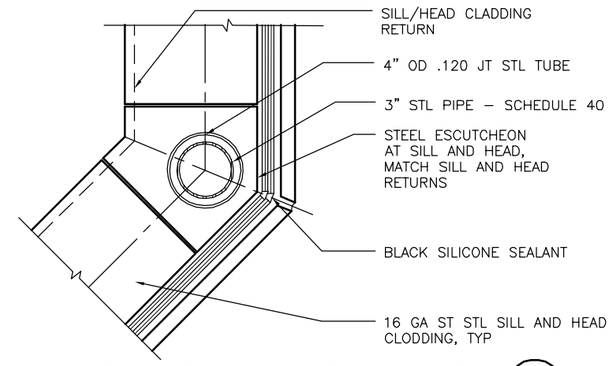

DETAIL AT SILL GLAZING JOINT 3 DB-A733 DB-A731 DB-A732
HEAD SIM
3"=1'-0"

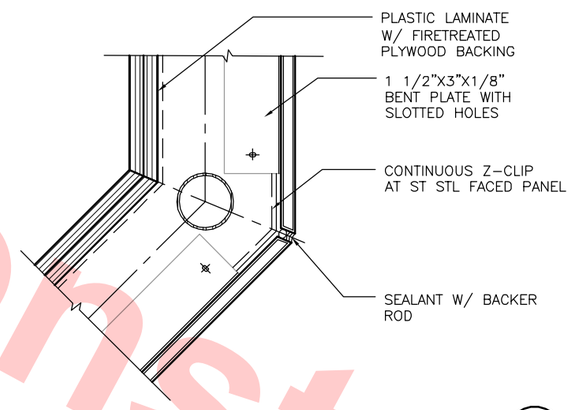

DETAIL AT WALL BELOW GLAZING 6 DB-A733 DB-A732
HEAD SIM
3"=1'-0"

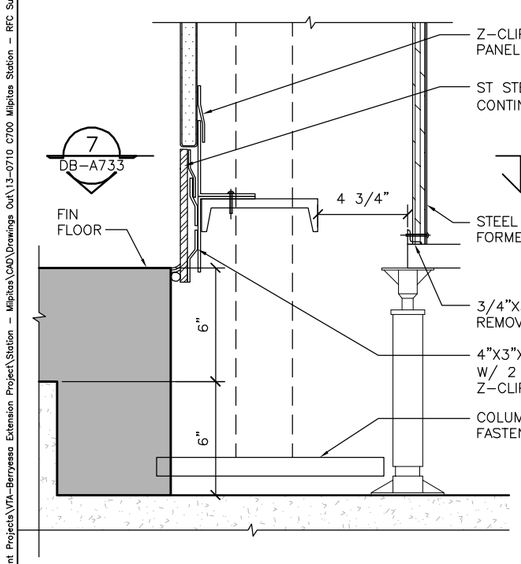

DETAIL AT BASE 4 DB-A733 DB-A732
3"=1'-0"

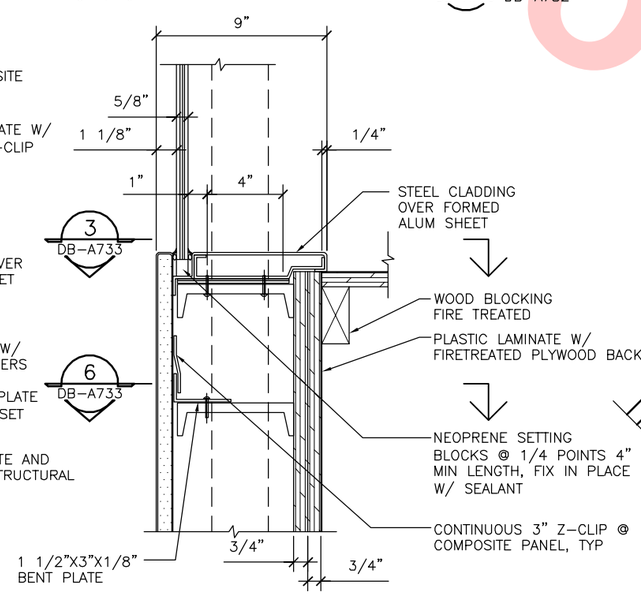

DETAIL AT WINDOW SILL 5 DB-A733 DB-A732
3"=1'-0"

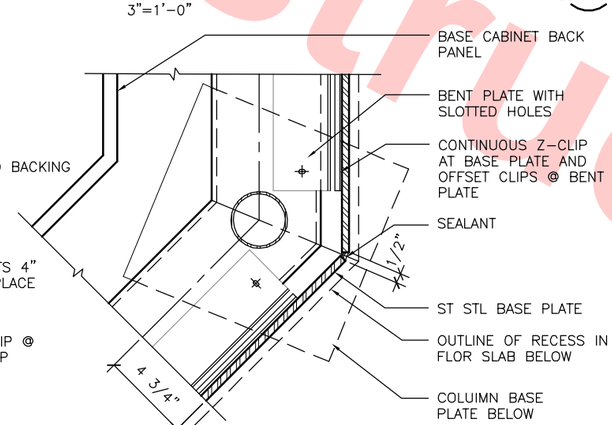

DETAIL AT KICK PLATE 7 DB-A733 DB-731
3"=1'-0"

3" 0 3" 6" 9"
GRAPHIC SCALE

Santa Clara Valley Transportation Authority

____NO EXCEPTIONS TAKEN (NET)
____MAKE CORRECTIONS NOTED (MCN)
____AMEND AND RESUBMIT (A/R)

Any action shown above is subject to the terms of the contract and does not relieve the Contractor of any of its obligations under the contract, including design and detailing.

Contract No.: DB11002F

By: _____ **Date:** _____

Not For Construction

REV	DATE	BY	SUB	APP	DESCRIPTION
0	20130710				READINESS FOR CONSTRUCTION

DESIGNED BY S. DEBNATH
DRAWN BY R. COLLADO
CHECKED BY E. BALLADA
IN CHARGE R. BARLAAN
DATE 20130710

LICENSED ARCHITECT SOMESH DEBNATH No. C21523 STATE OF CALIFORNIA

Skanska Shimmick Herzog
1436 California Circle
Milpitas, California 95035
A Joint Venture

Anil Verma Associates, Inc.
1970 Broadway, Suite 325, Oakland, CA 94612
Phone: (510) 835-2537 Fax: (510) 835-2339
SUBMITTED

Lockwood, Andrews & Newnam, Inc. A LEO A DALY COMPANY
T·Y·LIN INTERNATIONAL
APPROVED

VTA BART SILICON VALLEY
BART SILICON VALLEY BERRYESSA EXTENSION

LINE, TRACK, STATIONS AND SYSTEMS
DESIGN UNIT 023
MILPITAS STATION
STATION AGENT BOOTH
DETAILS

CADD FILENAME C700-S-DB-A733.dwg
SIZE D | SCALE 3"=1'-0"
CONTRACT NO. C700 | REV. 0
AREA CODE DB | SHEET NO. A733 | PAGE NO. 0525

JosephG Jun 26, 2013 – 3:39pm G:\Current Projects\VTA-Berryessa Extension Project\Station – Milpitas\CAD\Drawings Out\13-0710 C700 Milpitas Station – RFC Submit\C700-S-DB-A733.dwg

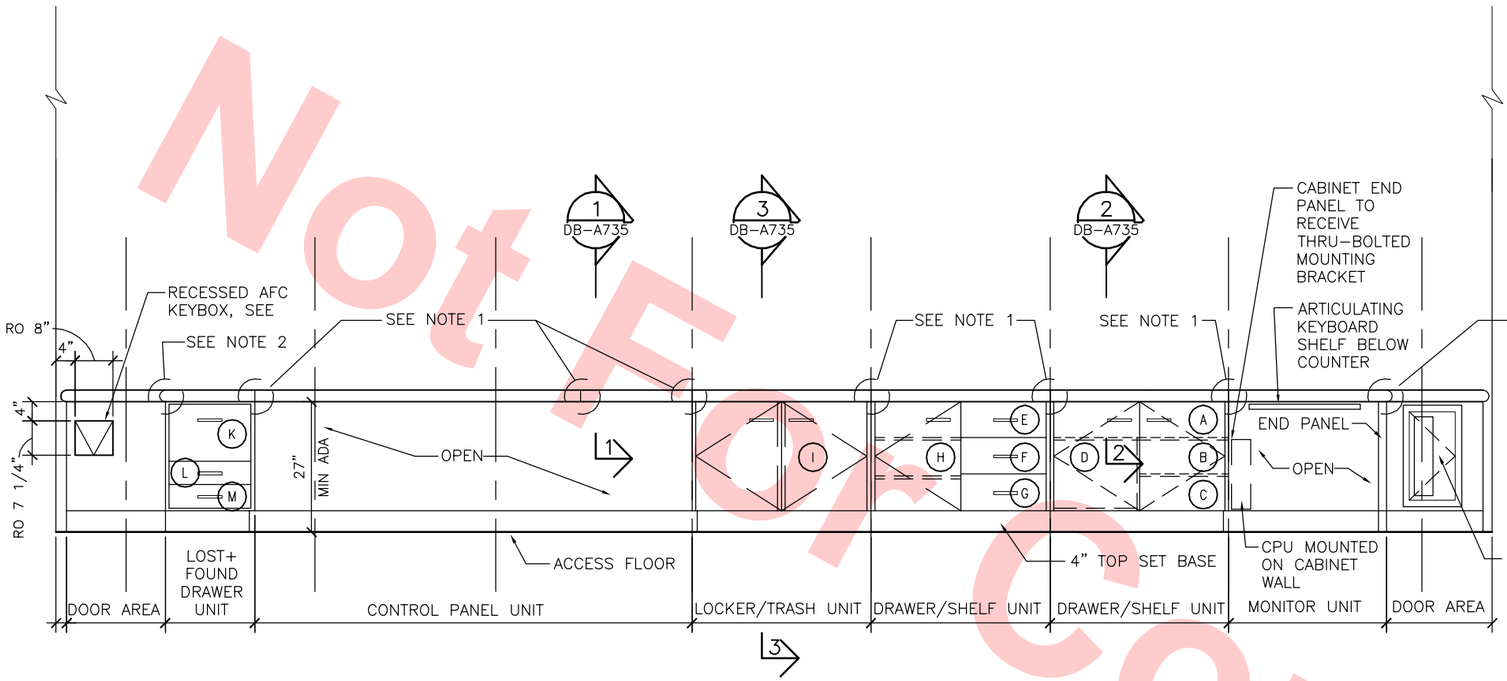

UNFOLDED CABINET ELEVATION (1)

SCALE: 3/4"=1'-0" — DB-A734

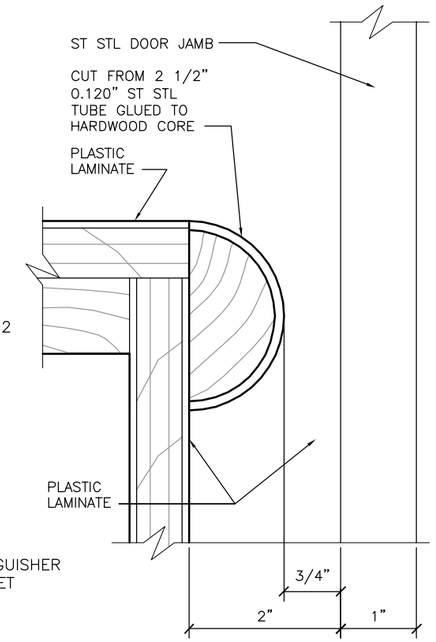

DETAIL @ DOOR JAMB (3)

SCALE: FULL SIZE — DB-A734

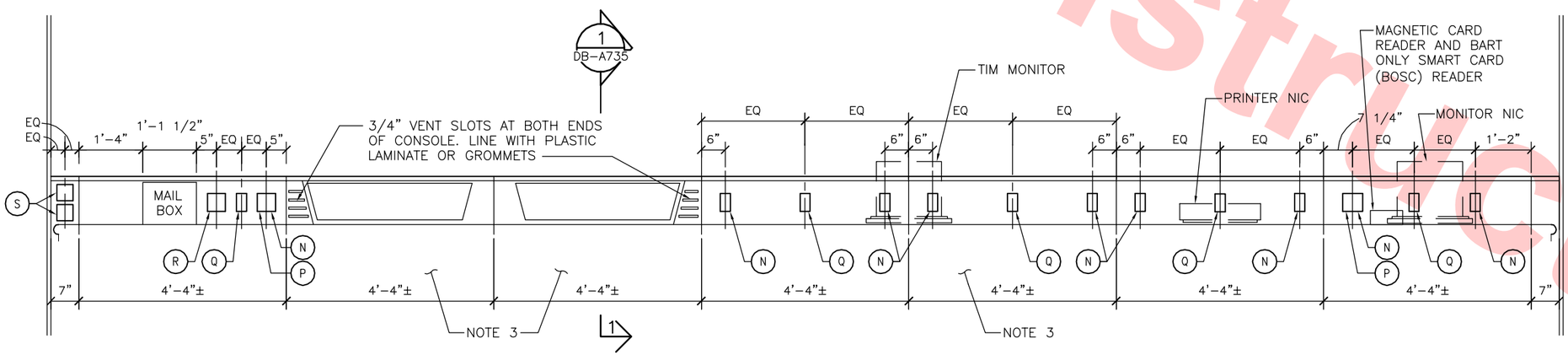

UNFOLDED BACKSPLASH ELEVATION (2)

SCALE: 3/4"=1'-0" — DB-A734

KEY NOTES

- (A) PRINTER PAPER – ONE CONTINUOUS SHELF
- (B) SUPPLIES – ONE HALF SHELF
- (C) SUPPLIES – ONE HALF SHELF
- (D) BINDERS
- (E) FORMS
- (F) FORMS
- * (G) PERSONAL
- * (H) STORAGE CABINET & RADIO CHARGING UNIT
- * (I) AGENTS LOCKER
- (J) NOT USED
- * (K) LOST/FOUND DRAWER
- (L) STORAGE
- (M) STORAGE
- (N) DUPLEX RECEPTACLE
- (O) COMMUNICATION RECEPTACLE–SEE NOTE 4
- (P) HEATER SWITCH
- (Q) PABX
- (R) AC CONTROLLER
- (S) BOOTH LIGHTING CONTROL
- * PROVIDE KEYED CABINET LOCKS

NOTES

1. MITERED INSIDE CORNERSAT HALF ROUND NOSE TRIM – TYP OF 6
2. RADIUSED SPHERICAL OUTSIDE CORNER WELDED TO ADJACENT ST STL EDGING – TYP OF 2
3. FOR LOCATIONS OF CUT-OUTS FOR RECEPTACLES, I/O, AND TERMINATION PANELS BELOW COUNTERTOP, REFER TO ELECTRICAL RISER DIAGRAM AND ARCHITECTURAL FLOOR PLANS
4. ALL WOOD MATERIAL USED IN STATION AGENT BOOTH – INCLUDING BUT NOT LIMITED TO CASEWORK PANELS, BLOCKING, NAILERS, AND TRIM – SHALL BE FIRE RESISTANT TREATED

Santa Clara Valley Transportation Authority

____NO EXCEPTIONS TAKEN (NET)
____MAKE CORRECTIONS NOTED (MCN)
____AMEND AND RESUBMIT (A/R)

Any action shown above is subject to the terms of the contract and does not relieve the Contractor of any of its obligations under the contract, including design and detailing.

Contract No.: DB11002F

By: _____ Date: _____

Not For Construction

REV	DATE	BY	SUB	APP	DESCRIPTION
0	20130710				READINESS FOR CONSTRUCTION

DESIGNED BY S. DEBNATH
DRAWN BY R. COLLADO
CHECKED BY E. BALLADA
IN CHARGE R. BARLAAN
DATE 20130710

LICENSED ARCHITECT SOMESH DEBNATH No. C21523 STATE OF CALIFORNIA

Skanska Shimmick Herzog
1436 California Circle
Milpitas, California 95035
A Joint Venture

Anil Verma Associates, Inc.
1970 Broadway, Suite 335
Oakland, CA 94612
Phone: (510) 835-2537 Fax: (510) 835-2339
SUBMITTED

Lockwood, Andrews & Newnam, Inc. — A LED A BALY COMPANY
T·Y·LIN INTERNATIONAL
APPROVED

VTA BART SILICON VALLEY
BART SILICON VALLEY BERRYESSA EXTENSION

LINE, TRACK, STATIONS AND SYSTEMS
DESIGN UNIT 023
MILPITAS STATION
STATION AGENT BOOTH
CABINET ELEVATIONS

CADD FILENAME C700-S-DB-A734.dwg
SIZE D | SCALE 3/4"=1'-0"
CONTRACT NO. C700 | REV. 0
AREA CODE DB | SHEET NO. A734 | PAGE NO. 0526

JosephG Jun 26, 2013 – 4:10pm G:\Current Projects\VTA-Berryessa Extension Project\Station – Milpitas\CAD\Drawings Out\13-0710 C700 Milpitas Station – RFC Submittal\C700-S-DB-A734.dwg

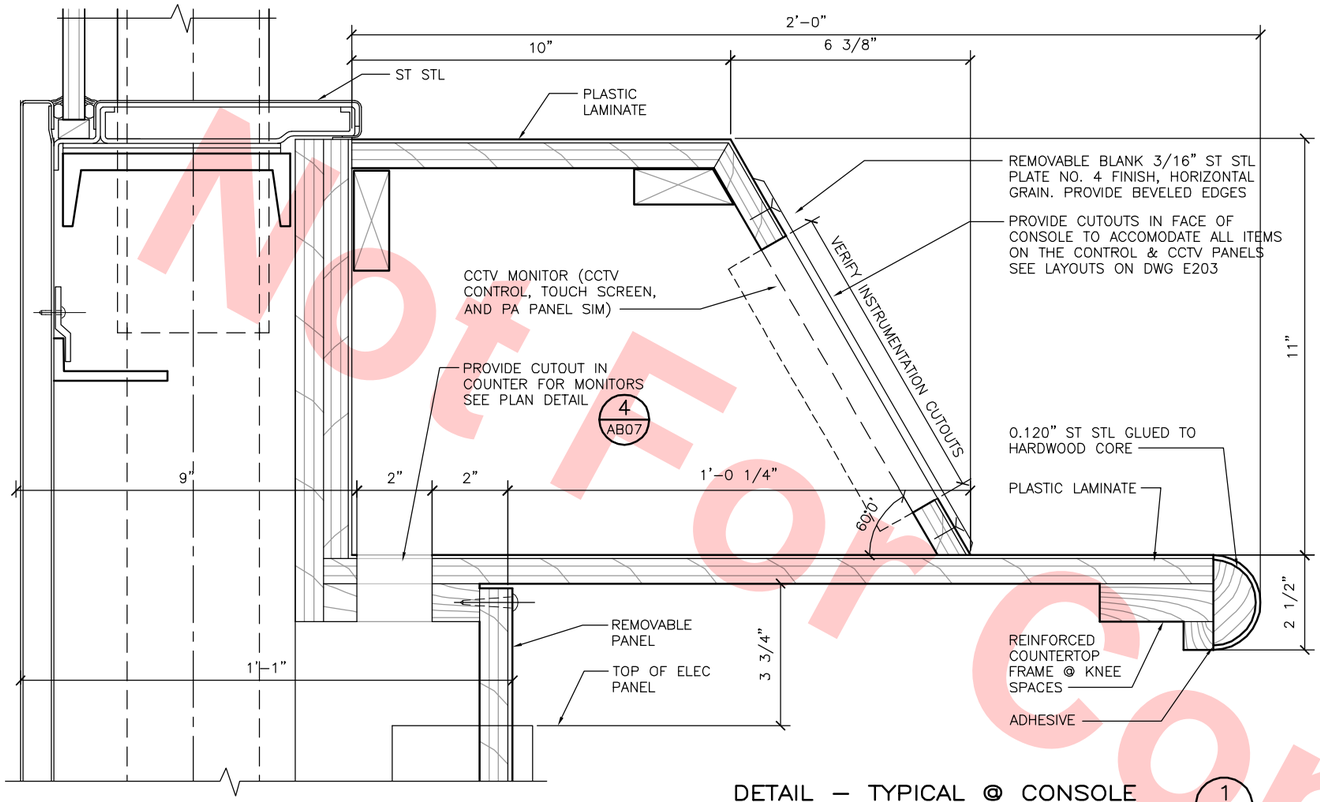

DETAIL – TYPICAL @ CONSOLE (1 / DB-A735)

SCALE: 6"=1'-0"

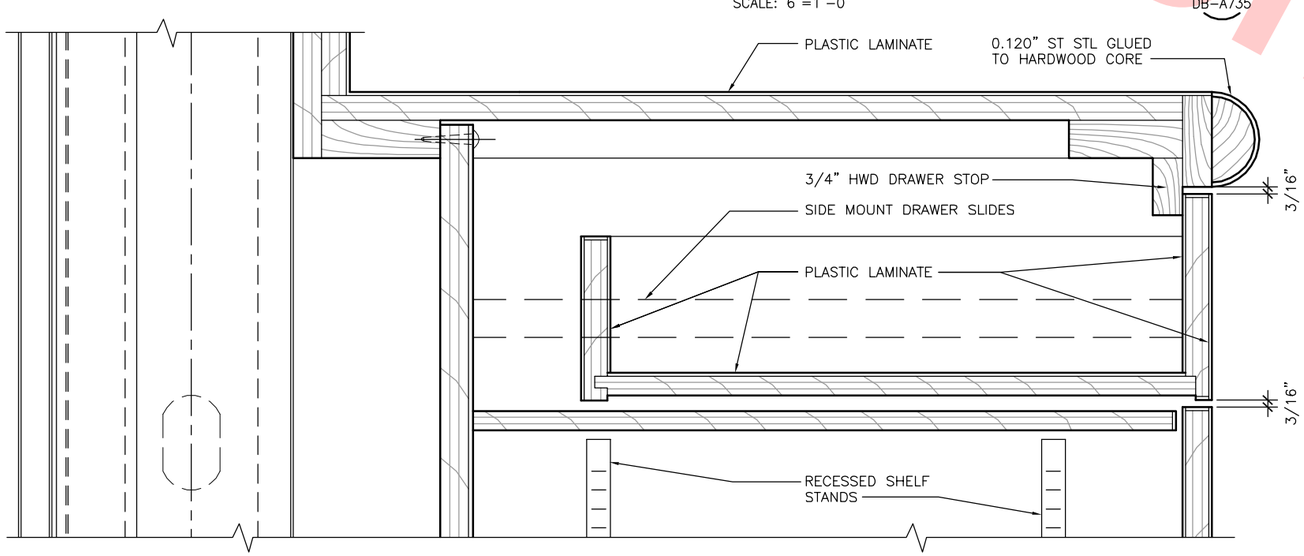

DETAIL – TYPICAL @ DRAWERS (2 / DB-A735)

SCALE: 6"=1'-0"

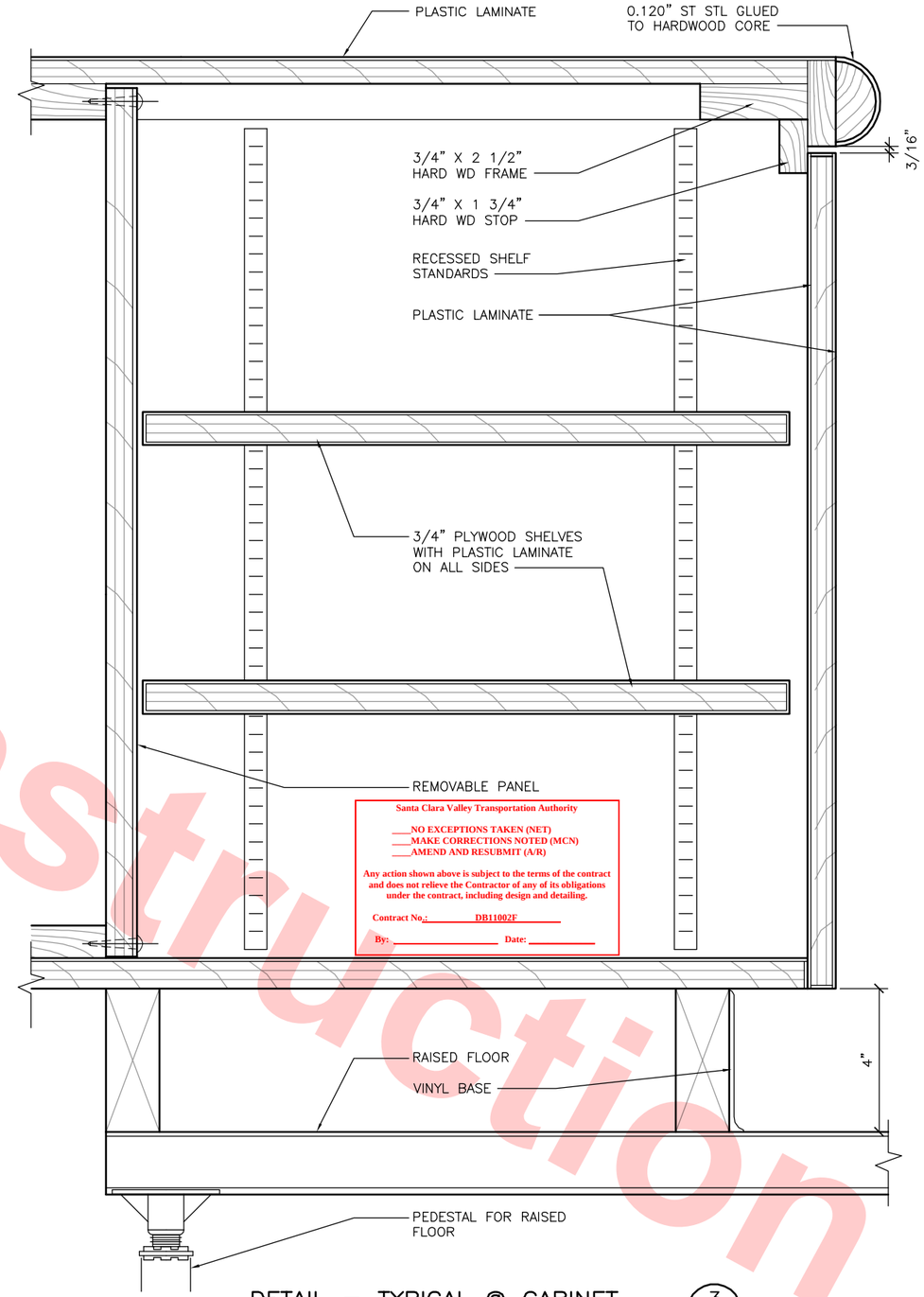

Santa Clara Valley Transportation Authority

___NO EXCEPTIONS TAKEN (NET)
___MAKE CORRECTIONS NOTED (MCN)
___AMEND AND RESUBMIT (A/R)

Any action shown above is subject to the terms of the contract and does not relieve the Contractor of any of its obligations under the contract, including design and detailing.

Contract No.: DB11002F

By: _____ Date: _____

DETAIL – TYPICAL @ CABINET (3 / DB-A735)

SCALE: 6"=1'-0"

Not For Construction

REV	DATE	BY	SUB	APP	DESCRIPTION
0	20130710				READINESS FOR CONSTRUCTION

DESIGNED BY S. DEBNATH
DRAWN BY R. COLLADO
CHECKED BY E. BALLADA
IN CHARGE R. BARLAAN
DATE 20130710

LICENSED ARCHITECT DINESH DEBNATH No. C21523 STATE OF CALIFORNIA

Skanska Shimmick Herzog
1436 California Circle
Milpitas, California 95035
A Joint Venture

Anil Verma Associates, Inc.
1970 Broadway, Suite 525 Oakland, CA 94612
Phone: (510) 835-2537 Fax: (510) 835-2339

Lockwood, Andrews & Newnam, Inc. A LEO A DALY COMPANY

T·Y·LIN INTERNATIONAL

SUBMITTED _____ APPROVED _____

VTA BART SILICON VALLEY
BART SILICON VALLEY BERRYESSA EXTENSION

LINE, TRACK, STATIONS AND SYSTEMS DESIGN UNIT 023
MILPITAS STATION
STATION AGENT BOOTH
CABINET DETAILS

CADD FILENAME C700-S-DB-A735.dwg
SIZE D | SCALE 1/2"=1'-0"
CONTRACT NO. C700 | REV. 0
AREA CODE DB | SHEET NO. A735 | PAGE NO. 0527

JosephG Jun 26, 2013 – 4:11pm G:\Current Projects\VTA-Berryessa Extension Project\Station – Milpitas\CAD\Drawings Out\13-0710 C700 Milpitas Station – RFC Submit\C700-S-DB-A735.dwg

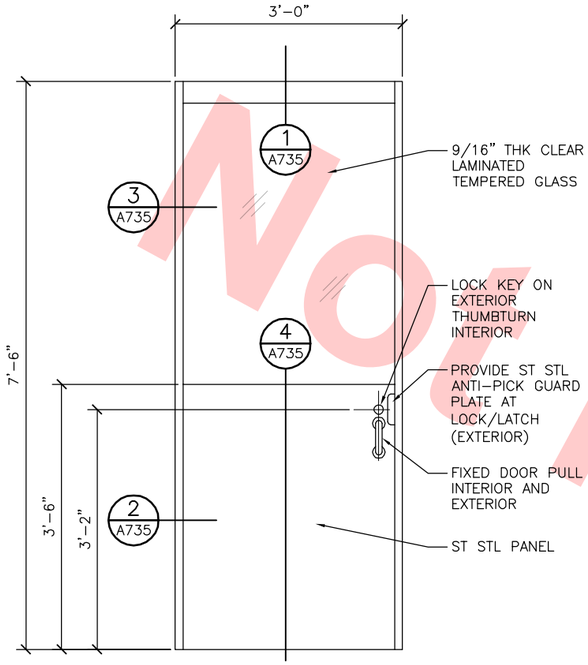

DOOR ELEVATION (A / DB-A735)
1"=1'-0"

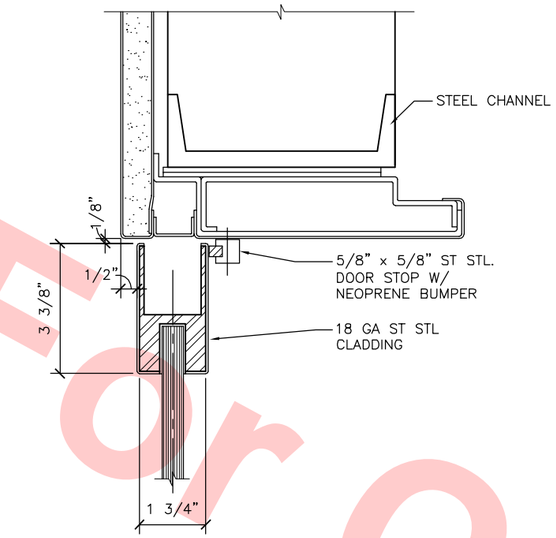

DETAIL – DOOR HEAD (1 / DB-A735)
6"=1'-0"

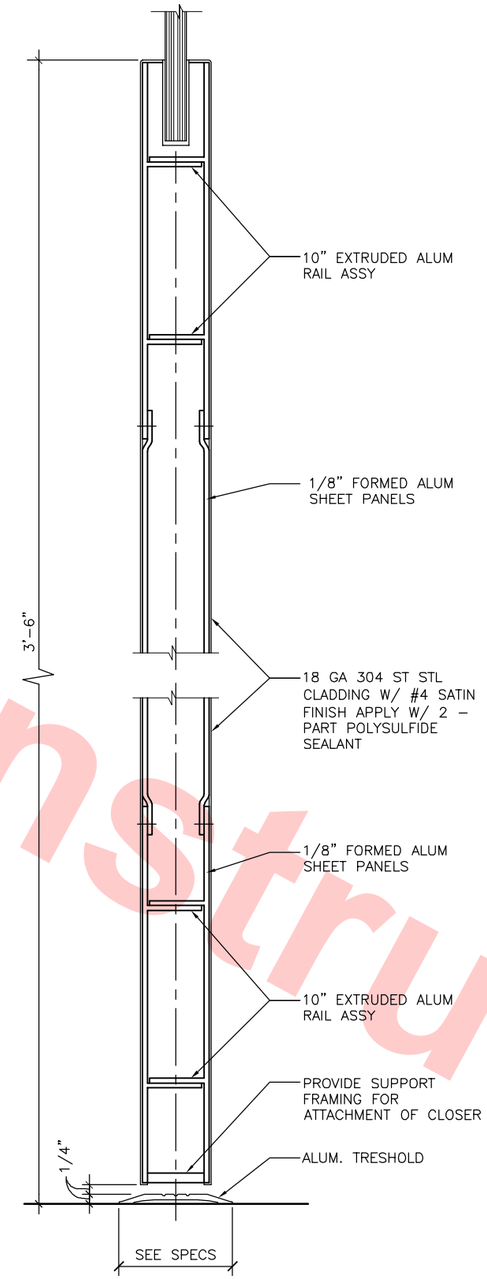

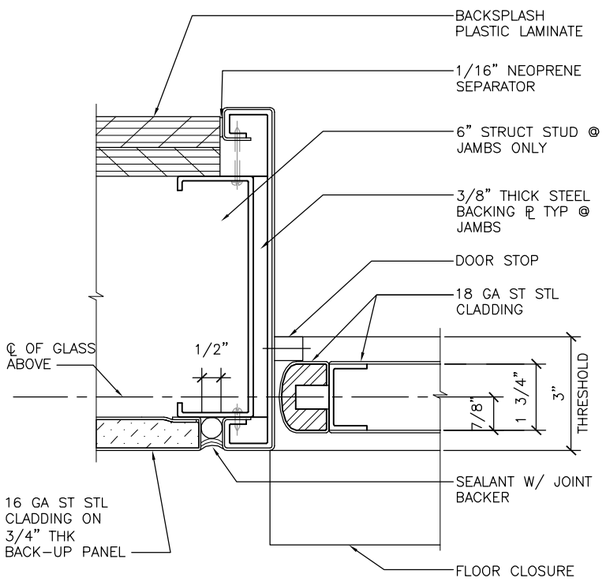

DETAIL – DOOR JAMB @ PANEL (2 / DB-A735)
6"=1'-0"

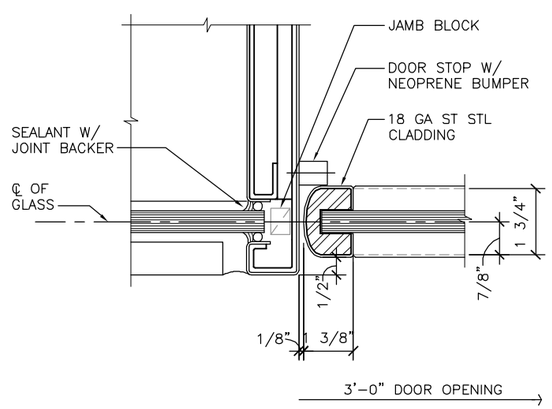

DETAIL – DOOR JAMB @ GLASS (3 / DB-A735)
6"=1'-0"

@ GLASS DOOR BASE (4 / DB-A735)
6"=1'-0"

Santa Clara Valley Transportation Authority

____NO EXCEPTIONS TAKEN (NET)
____MAKE CORRECTIONS NOTED (MCN)
____AMEND AND RESUBMIT (A/R)

Any action shown above is subject to the terms of the contract and does not relieve the Contractor of any of its obligations under the contract, including design and detailing.

Contract No.: DB11002F

By: _____ **Date:** _____

Not For Construction

REV	DATE	BY	SUB	APP	DESCRIPTION
0	20130710				READINESS FOR CONSTRUCTION

DESIGNED BY S. DEBNATH
DRAWN BY R. COLLADO
CHECKED BY E. BALLADA
IN CHARGE R. BARLAAN
DATE 20130710

LICENSED ARCHITECT SOMESH DEBNATH No. C21523 STATE OF CALIFORNIA

Skanska Shimmick Herzog
1436 California Circle Milpitas, California 95035
A Joint Venture

Anil Verma Associates, Inc.
1970 Broadway, Suite 525 Oakland, CA 94612
Phone: (510) 835-2537 Fax: (510) 835-2339
SUBMITTED

Lockwood, Andrews & Newnam, Inc. A LEO A DALY COMPANY
T·Y·LIN INTERNATIONAL
APPROVED

VTA BART SILICON VALLEY
BART SILICON VALLEY BERRYESSA EXTENSION

LINE, TRACK, STATIONS AND SYSTEMS
DESIGN UNIT 023
MILPITAS STATION
STATION AGENT BOOTH
DOOR DETAILS

CADD FILENAME C700-S-DB-A736.dwg
SIZE D | SCALE AS NOTED
CONTRACT NO. C700 | REV. 0
AREA CODE DB | SHEET NO. A736 | PAGE NO. 0528

JosephG Jun 26, 2013 – 3:41pm G:\Current Projects\VTA-Berryessa Extension Project\Station – Milpitas\CAD\Drawings Out\13-0710 C700 Milpitas Station – RFC Submittc700-S-DB-A736.dwg

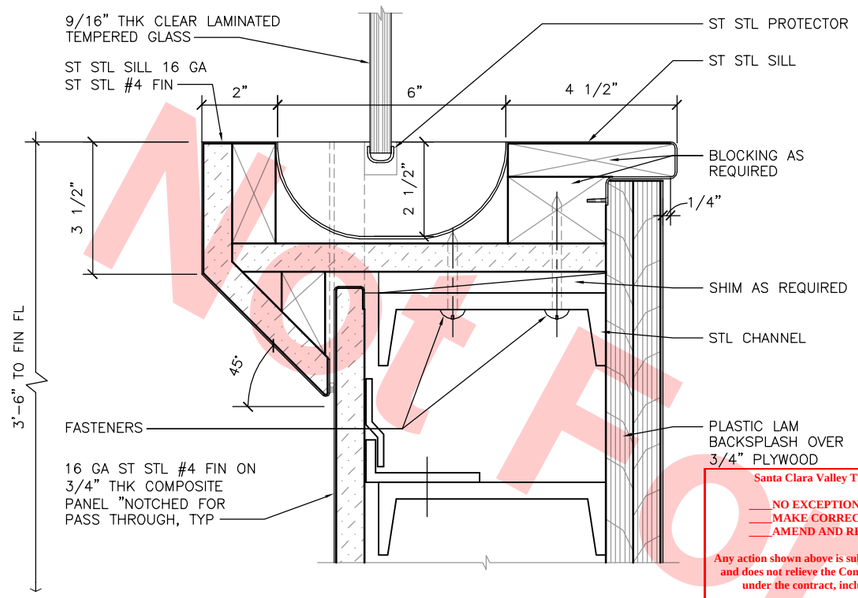

DETAIL @ PASS-THRU (1) DB-A737 — DB-A731
SCALE: 6"=1'-0"

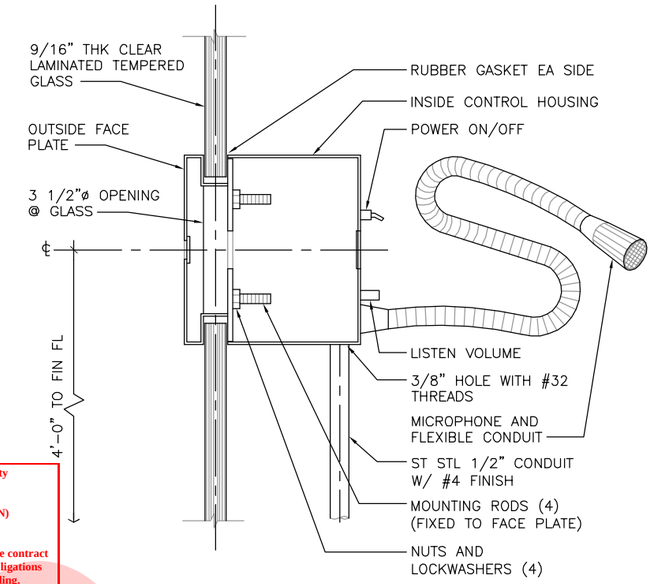

DETAIL @ TALK-THRU AMPLIFIER (2) DB-A737 — DB-A732
SCALE: 6"=1'-0"

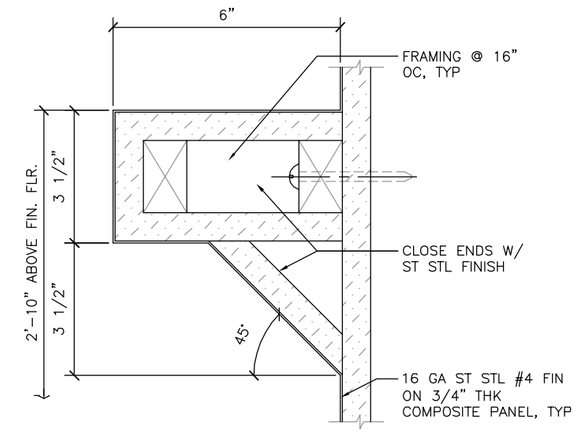

DETAIL @ WRITING COUNTER (6) DB-A737 — DB-A731
SCALE: 6"=1'-0"

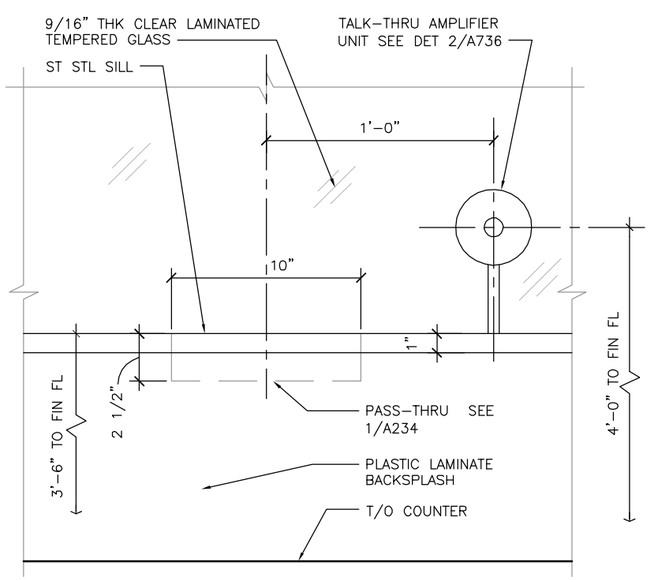

DETAIL @ TALK-THRU AMP INSIDE BOOTH (3) DB-A737
SCALE: 3"=1'-0"

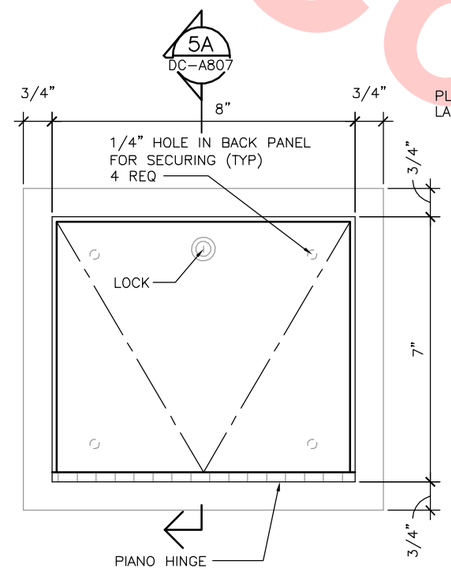

MATERIAL: 18 GA STAINLESS STEEL #4 FINISH.
HINGE: STAINLESS STEEL PIANO TYPE. SPOTWELD TO DOOR AND BOX. WELD HINGE PIN TO PREVENT REMOVAL.

DETAIL – AFC KEYBOX (5) DB-A737
SCALE: 6"=1'-0"

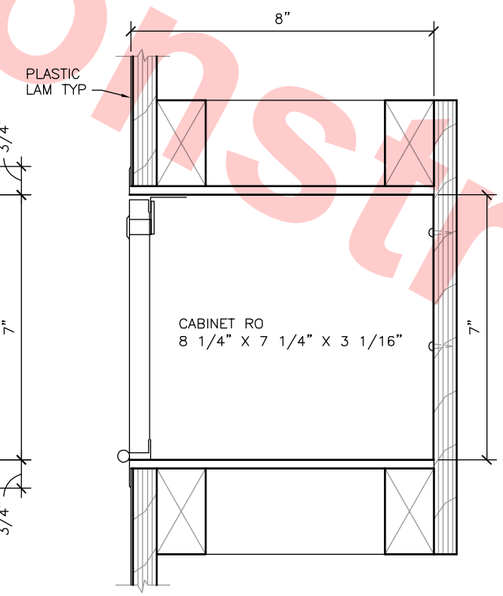

SECTION – AFC KEYBOX (5A) DB-A737
SCALE: 6"=1'-0"

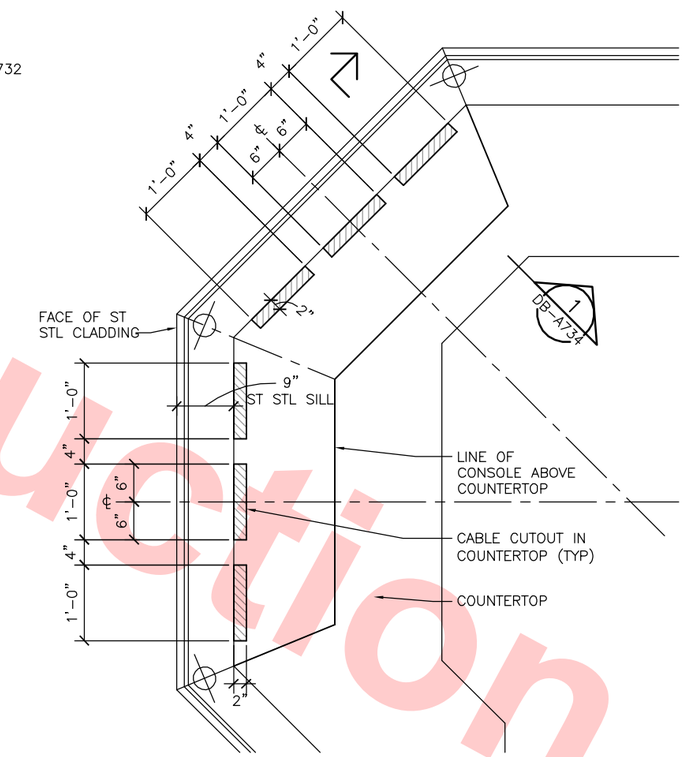

PLAN DETAIL @ CUT-OUT SIZES IN COUNTERTOP (4) DB-A737
1"=1'-0" BELOW CONSOLES

Not For Construction

REV	DATE	BY	SUB	APP	DESCRIPTION
0	20130710				READINESS FOR CONSTRUCTION

DESIGNED BY S. DEBNATH
DRAWN BY R. COLLADO
CHECKED BY E. BALLADA
IN CHARGE R. BARLAAN
DATE 20130710

LICENSED ARCHITECT — SANJEEV DEBNATH — No. C21523 — STATE OF CALIFORNIA

Skanska Shimmick Herzog
1436 California Circle
Milpitas, California 95035
A Joint Venture

Anil Verma Associates, Inc.
1970 Broadway, Suite 525, Oakland, CA 94612
Phone: (510) 835-2537 Fax: (510) 835-2339
SUBMITTED

Lockwood, Andrews & Newnam, Inc. — A LAN & BALY COMPANY
T·Y·LIN INTERNATIONAL
APPROVED

VTA BART SILICON VALLEY
BART SILICON VALLEY BERRYESSA EXTENSION

LINE, TRACK, STATIONS AND SYSTEMS
DESIGN UNIT 023
MILPITAS STATION
STATION AGENT BOOTH
MISCELLANEOUS DETAILS

CADD FILENAME C700-S-DB-A737.dwg
SIZE D | SCALE AS NOTED
CONTRACT NO. C700 | REV. 0
AREA CODE DB | SHEET NO. A737 | PAGE NO. 0529

JosephG Jun 26, 2013 – 3:42pm G:\Current Projects\VTA-Berryessa Extension Project\Station – Milpitas\DAD\Drawings Out\13-0710 C700 Milpitas Station – RFC Submit\C700-S-DB-A737.dwg

BUILDING/CODE DATA

A. BUILDING USE: ANCILLARY ELEMENTS TO ADJACENT FIXED GUIDERAIL STATION

B. OCCUPANCY TYPE: MIXED OCCUPANCY B, H–3 AND F–1

C. CONSTRUCTION TYPE: TYPE V–B (ALLOWED PER TABLE 503)

D. BUILDING AREA: 3,487 SQ. FT. (COVERED AREAS A–01 TO A–08)
(5,000 MAX. ALLOWED PER TABLE 503)

D. BUILDING HEIGHT: 18'–0"
(40'–0" MAX. ALLOWED PER TABLE 503)

E. OCCUPANCY SEPARATION:

1. BETWEEN B AND F–1 — NON–REQUIRED (PER SEC. 508.4)
2. BETWEEN B AND H–3 — 3 HOUR PROVIDED (2 HOUR REQUIRED PER 604.2.14.1)

F. FIRE RESISTANCE REQUIREMENTS PER TABLE 601

BUILDING ELEMENT	REQUIRED	PROVIDED
PRIMARY STRUCTURAL FRAME	0	3–HR @ AREA 07&08
BEARING WALLS	0	3–HR @ AREA 07&08
ROOF CONSTRUCTION	0	3–HR @ AREA 07&08

G. SPRINKLER SYSTEM: PROVIDED (SEE APPROVED FIRE PROTECTION DRAWINGS)

H. PORTABLE FIRE EXTINGUISHER: PROVIDED PER TABLE 906.3(1) EXCEPT AREA 07 AND 08.
AREA 07 AND 08 SHALL COMPLY WITH CCR, TITLE 19, DIVISION 1, CHAPTER 3

I. EXITING ANALYSIS PER CHAPTER 10

AREA	OCCUPANCY TYPE	FLOOR AREA (SF)	OCCUPANT PER 1004.1	EXIT REQ'D/ TAB 1021.2	EXIT PROVIDED	EXIT 'W' PER 1005	EXIT 'W' PROVIDED
A–01	F–1	1,333	4	1	1	32"	96"
A–02	B	195	2	1	1	32"	48"
A–03	B	625	6	1	1	32"	36"
A–07	H–3	501	2	2	2	64"	72"
A–08	H–3	416	2	2	2	64"	72"
A–09	F–1	1,533	5	1	2	64"	84"

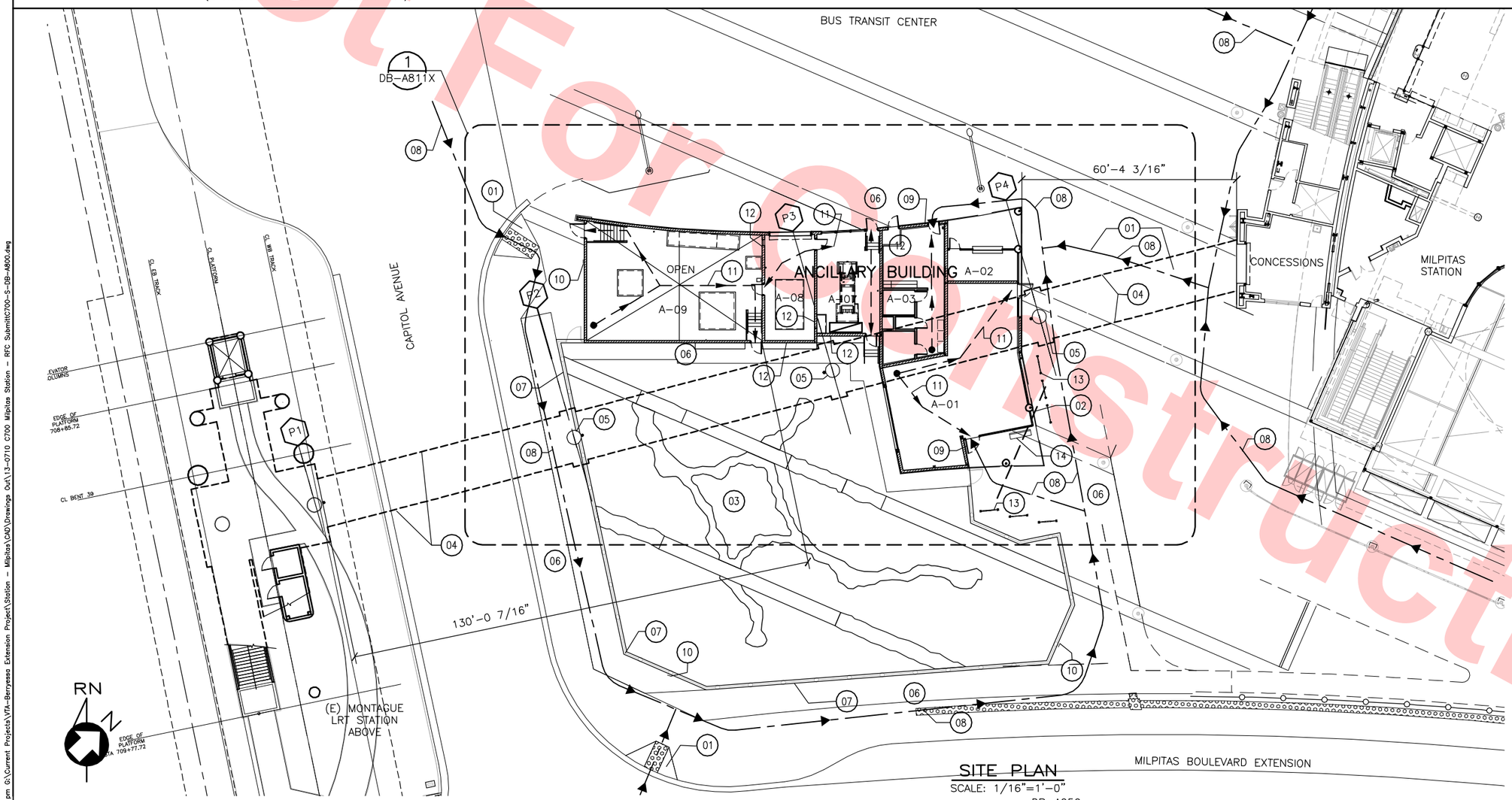

SITE PLAN
SCALE: 1/16"=1'–0"
DB–A050

TYPICAL KEY NOTES

01 ACCESSIBLE RAMP WITH TRUNCATED DOMES
02 SETBACK LINE – MAINTAIN 6' CLEAR FROM 12" WATER SUPPLY LINE. NO COLUMNS IN SETBACK ALLOWED.
03 DETENTION BASIN
04 LINES OF POC ABOVE
05 POC COLUMN
06 CONCRETE PAVING
07 METAL FENCE. SEE LANDSCAPE DRAWINGS.
08 ACCESSIBLE PATH OF TRAVEL
09 ACCESSIBLE ENTRY WITH ACCESSIBILITY SYMBOL SIGN AT OR ADJACENT TO DOOR. REFER TO SIGNAGE DRAWINGS FOR DETAILS.
10 DIRECTIONAL SIGNAGE MOUNTED ON WALL OR FENCE. REFER TO SIGNAGE DRAWINGS. FOR DETAILS.
11 EXIT ACCESS PATH
12 3–HOUR RATED WALL. SEE FLOOR PLAN FOR WALL TYPES.
13 3 BEND BIKE RACK
14 BENCH

LEGEND
ACCESSIBILITY ROUTE
EXIT PATH OF TRAVEL

Santa Clara Valley Transportation Authority

____NO EXCEPTIONS TAKEN (NET)
____MAKE CORRECTIONS NOTED (MCN)
____AMEND AND RESUBMIT (A/R)

Any action shown above is subject to the terms of the contract and does not relieve the Contractor of any of its obligations under the contract, including design and detailing.

Contract No.: DB11002F

By: _____ **Date:** _____

16' 0' 16' 32'
GRAPHIC SCALE

KEY PLAN

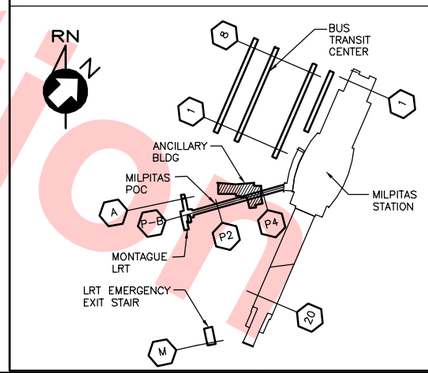

REV	DATE	BY	SUB	APP	DESCRIPTION
0	20130710				READINESS FOR CONSTRUCTION

DESIGNED BY S. DEBNATH
DRAWN BY B. ITURALDE
CHECKED BY E. LOPEZ
IN CHARGE R. BARLAAN
DATE 20130710

LICENSED ARCHITECT SOMESH DEBNATH No. C21523 STATE OF CALIFORNIA

Skanska Shimmick Herzog
1436 California Circle
Milpitas, California 95035
A Joint Venture

Anil Verma Associates, Inc.
1970 Broadway, Suite 535 Oakland, CA 94612
Phone: (510) 835-2532 Fax: (510) 835-2339

Lockwood, Andrews & Newnam, Inc. A LAN & BALL COMPANY
T·Y·LIN INTERNATIONAL

SUBMITTED _____ APPROVED _____

VTA BART SILICON VALLEY
BART SILICON VALLEY BERRYESSA EXTENSION

LINE, TRACK, STATIONS AND SYSTEMS
DESIGN UNIT 023
ANCILLARY BUILDING

SITE PLAN

CADD FILENAME C700–S–DB–A800.dwg
SIZE D | SCALE 1/16"=1'–0"
CONTRACT NO. C700 | REV. 0
AREA CODE DB | SHEET NO. A800 | PAGE NO. 0582

Joseph G Jun 26, 2013 – 1:01pm G:\Current Projects\VTA–Berryessa Extension Project\Station – Milpitas\CAD\Drawings Out\13–0710 C700 Milpitas Station – RFC Submit\C700–S–DB–A800.dwg

Not For Construction

Santa Clara Valley Transportation Authority

____NO EXCEPTIONS TAKEN (NET)
____MAKE CORRECTIONS NOTED (MCN)
____AMEND AND RESUBMIT (A/R)

Any action shown above is subject to the terms of the contract and does not relieve the Contractor of any of its obligations under the contract, including design and detailing.

Contract No.: DB11002F

By: _____ Date: _____

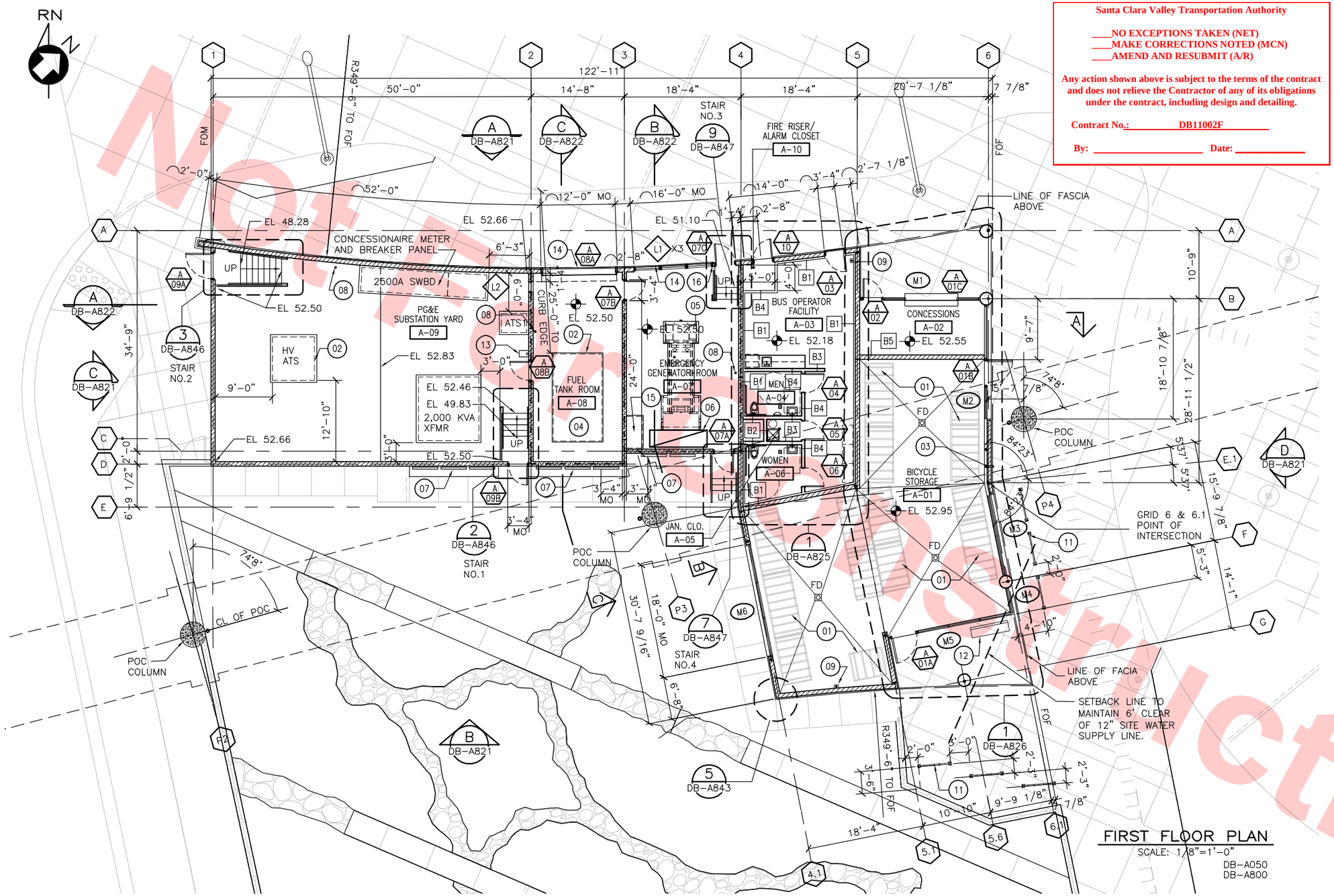

FIRST FLOOR PLAN
SCALE: 1/8"=1'-0"
DB-A050
DB-A800

KEY NOTES

01	2-TIER BIKE RACKS (180 TOTAL CAPACITY)
02	6" HIGH CONCRETE PAD. SIZE AS REQUIRED BY EQUIPMENT.
03	OVERFLOW DRAIN SPOUT AT WALL 12" AFF
04	FUEL TANK. MAINTAIN 3' MINIMUM CLEARANCE FROM ADJACENT WALLS OR ELEMENTS.
05	EMERGENCY GENERATOR. MAINTAIN 3' MINIMUM CLEARANCE FROM ADJACENT WALLS OR ELEMENTS
06	AIR EXIT VENTILATION THRU ROOF
07	GREEN WALL SYSTEM
08	PORTABLE FIRE EXTINGGUISHER ON WALL BRACKET OR HANGER
09	PORTABLE FIRE EXTINGGUISHER ON CABINET
10	2-TIER DOUBLE SIDED BIKE RACKS
11	3 BEND BIKE RACK
12	BENCH
13	12"X18" CONCRETE SPLASH BLOCK
14	4X4X3/8 GALVANIZED STEEL ANGLE WITH DOWELS @ 24" O.C. CURVED TO FOLLOW BLDG RADIUS
15	DAY TANK
16	TS 6X4X1/4 DOOR POST WITH WELDED 1/4" MOUNTING PLATE AT TOP AND BOTTOM WITH EXPANSION BOLT FASTENERS.

SYMBOLS AND LEGEND

A 07C	DOOR NUMBER, REFER TO DOOR SCHEDULE ON SHEET DB-A835
B1	WALL TYPE, REFER TO PARTITION DETAILS ON SHEET DB-A835
M1	WIRE MESH TYPE, REFER TO WIRE MESH PANEL SCHEDULE ON SHEET DB-A845
FUEL TANK ROOM A-08	ROOM NAME AND ROOM NUMBER, REFER TO ROOM FINISH SCHEDULE FOR FINISHES ON SHEET DB-A834
L1	LOUVER SEE SHEET DB-A841

8' 0' 8' 16'
GRAPHIC SCALE

KEY PLAN

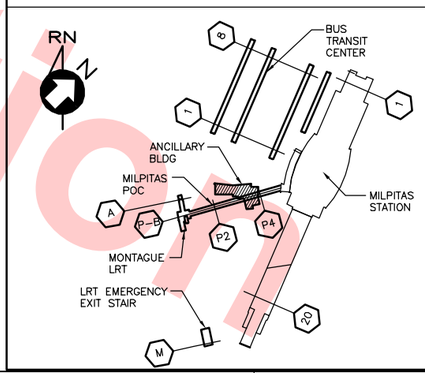

Not for Construction

REV	DATE	BY	SUB	APP	DESCRIPTION
0	20130710				READINESS FOR CONSTRUCTION

DESIGNED BY S. DEBNATH
DRAWN BY B. ITURALDE
CHECKED BY H. LOPEZ
IN CHARGE R. BARLAAN
DATE 20130710

LICENSED ARCHITECT SOMESH DEBNATH No. C21523 STATE OF CALIFORNIA

Skanska Shimmick Herzog
1436 California Circle
Milpitas, California 95035
A Joint Venture

Anil Verma Associates, Inc.
1970 Broadway, Suite 525, Oakland, CA 94612
Phone: (510) 835-2337 Fax: (510) 835-2339
SUBMITTED

Lockwood, Andrews & Newnam, Inc. A LAN & BAH COMPANY
T·Y·LIN INTERNATIONAL
APPROVED

VTA BART SILICON VALLEY
BART SILICON VALLEY BERRYESSA EXTENSION

LINE, TRACK, STATIONS AND SYSTEMS
DESIGN UNIT 023
ANCILLARY BUILDING

FIRST FLOOR PLAN

CADD FILENAME C700-S-DB-811X.dwg
SIZE D | SCALE 1/8"=1'-0"
CONTRACT NO. C700 | REV. 0
AREA CODE DB | SHEET NO. A811X | PAGE NO. 0583

Jun 26, 2013 - 1:02pm G:\Current Projects\VTA-Berryessa Extension Project\Station - Milpitas\CAD\Drawings Out\13-0710 C700 Milpitas Station - RFC Submittal\C700-S-DB-A811X.dwg
JosephG

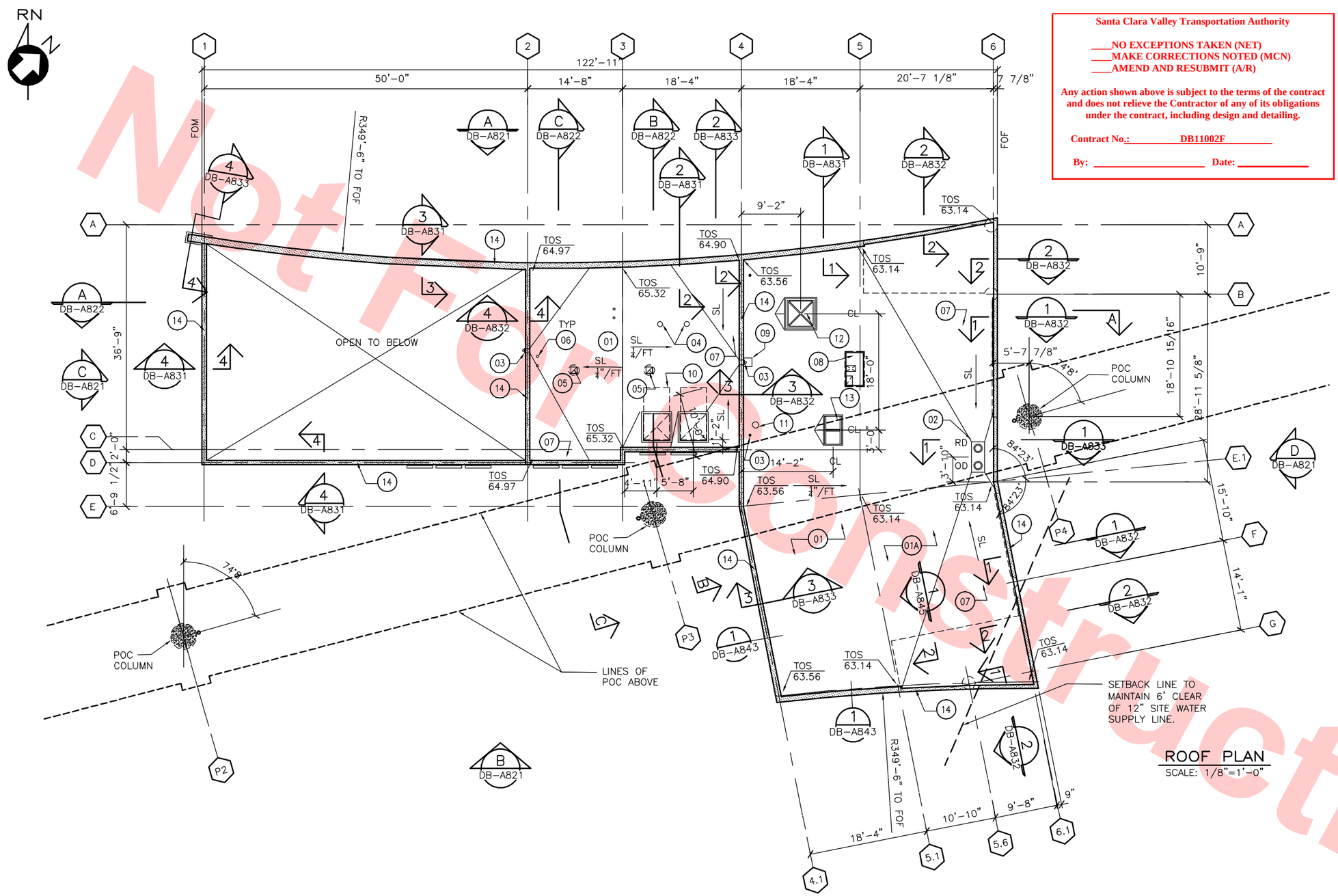

ROOF PLAN

SCALE: 1/8"=1'-0"

Not For Construction

Santa Clara Valley Transportation Authority

____NO EXCEPTIONS TAKEN (NET)
____MAKE CORRECTIONS NOTED (MCN)
____AMEND AND RESUBMIT (A/R)

Any action shown above is subject to the terms of the contract and does not relieve the Contractor of any of its obligations under the contract, including design and detailing.

Contract No.: DB11002F

By: _____ Date: _____

KEY NOTES

01 MEMBRANE ROOFING OVER RIGID INSULATION PANELS. SEE DETAIL 1/DB-A842

01A MEMBRANE ROOFING OVER TAPERED RIGID INSULATION PANELS. SEE DETAIL 1/DB-A842

02 ROOF DRAIN AND OVERFLOW DRAIN. SEE DETAIL 6/DB-A842

03 SCUPPER THRU WALL WITH DOWN SPOUT AND OVERFLOW SCUPPER. SEE DETAIL 8/DB-A842

04 GENERATOR EXHAUST FLUE. SEE DETAIL 3/DB-A842

05 EXHAUST FAN. SEE DETAIL 4/DB-A842

06 VENT THRU ROOF. SEE MECHANICAL

07 CRICKET – BUILT WITH TAPERED RIGID INSULATION

08 HEAT PUMP. SEE CURB DETAIL 5/DB-A842

09 METAL SPLASH PAN ADHERED TO ROOFING.

10 AIR VENTILATOR DUCT THRU ROOF. SEE SIMILAR DETAIL 4/DB-A842

11 GOOSENECK DISCHARGE. SEE MECHANICAL

12 SKYLIGHT NO. 1 SEE DETAIL 1/DB-A841

13 SKYLIGHT NO. 2 SEE DETAIL 2/DB-A841

14 BIRD SPIKES OVER PARAPET

NOTE:
1. ROOF PENETRATIONS SHALL BE NO LESS THAN 12" AWAY FROM WALLS.
2. FOR DETAILS OF PENETRATION THRU ROOF OF MECHANICAL ELEMENTS REFER TO MECHANICAL DRAWINGS

4' 0' 4' 12' 20' 28'

GRAPHIC SCALE

KEY PLAN

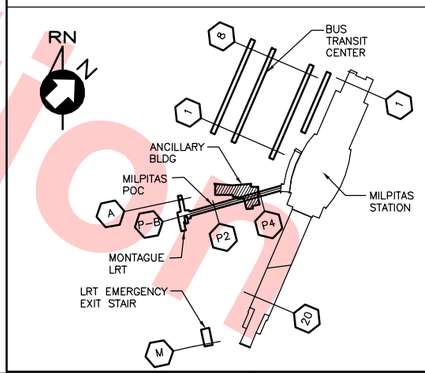

REV	DATE	BY	SUB	APP	DESCRIPTION
0	20130710				READINESS FOR CONSTRUCTION

DESIGNED BY S. DEBNATH
DRAWN BY B. ITURALDE
CHECKED BY H. LOPEZ
IN CHARGE R. BARLAAN
DATE 20130710

LICENSED ARCHITECT SOMESH DEBNATH No. C21523 STATE OF CALIFORNIA

Skanska Shimmick Herzog
1436 California Circle
Milpitas, California 95035
A Joint Venture

Anil Verma Associates, Inc.
1970 Broadway, Suite 525 Oakland, CA 94612
Phone: (510) 835-2537 Fax: (510) 835-2339

Lockwood, Andrews & Newnam, Inc. A LEO A DALY COMPANY

T·Y·LIN INTERNATIONAL

SUBMITTED _____

APPROVED _____

VTA BART SILICON VALLEY

BART SILICON VALLEY BERRYESSA EXTENSION

LINE, TRACK, STATIONS AND SYSTEMS
DESIGN UNIT 023
ANCILLARY BUILDING

ROOF PLAN

CADD FILENAME C700-S-DB-A812X.dwg
SIZE D | SCALE 1/8"=1'-0"
CONTRACT NO. C700 | REV. 0
AREA CODE DB | SHEET NO. A812X | PAGE NO. 0584

JosephG Jun 26, 2013 – 1:02pm G:\Current Projects\VTA-Berryessa Extension Project\Station – Milpitas\CAD\Drawings Out\13-0710 C700 Milpitas Station – RFC Submit\C700-S-DB-A812X.dwg

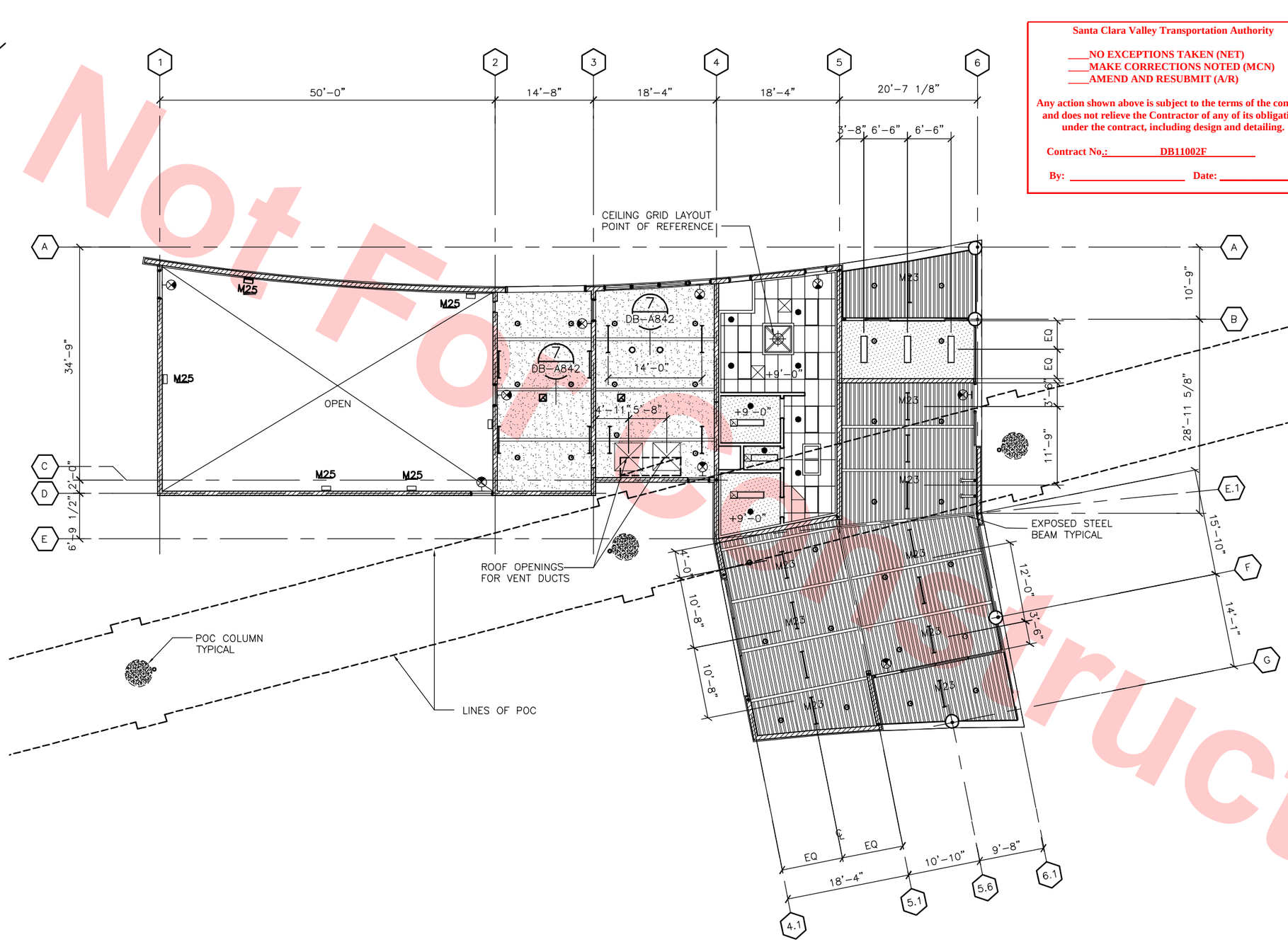

REFLECTED CEILING PLAN

SCALE: 1/8"=1'-0"

Santa Clara Valley Transportation Authority

____NO EXCEPTIONS TAKEN (NET)
____MAKE CORRECTIONS NOTED (MCN)
____AMEND AND RESUBMIT (A/R)

Any action shown above is subject to the terms of the contract and does not relieve the Contractor of any of its obligations under the contract, including design and detailing.

Contract No.: DB11002F

By: _____ Date: _____

LEGEND

- GYP BOARD CEILING. SEE DETAIL 6/A840
- LAY-IN ACOUSTICAL TILE CEILING. SEE DETAIL 1/A840
- LINEAR FLUORESCENT STRIP LIGHT PENDANT MOUNTING
- M23 — LINEAR FLOURESCENT DOWNLIGHT WITH WIRE GUARD PENDANT MOUNTING
- M25 — 9" DEEP x 16" WIDE METAL HALIDE WALL SCONCE TYPE M25, MOUNTED @ 8'-0" AFF TO BOTTOM OF FIXTURE UON
- 2'x4' RECESSED LINEAR FLUORESCENT FIXTURE
- EXIT LIGHT
- SUPPLY AIR DIFFUSER
- EXHAUST AIR DIFFUSER/GRILLE
- RETURN AIR DIFFUSER
- EXPOSED SPRAYED FIREPROOFING
- EXPOSED STEEL DECKING
- FIRE SPRINKLER HEADS
- +9'-0" CEILING HEIGHT AS MEASURED FROM FINISH FLOOR

8' 0' 8' 16'

GRAPHIC SCALE

KEY PLAN

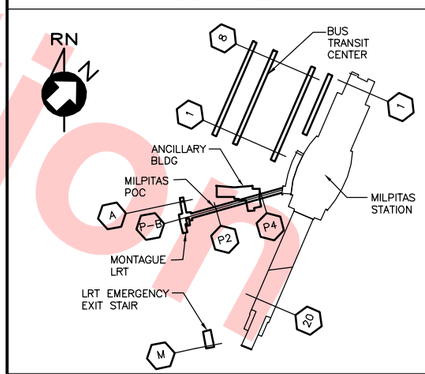

REV	DATE	BY	SUB	APP	DESCRIPTION
0	20130710				READINESS FOR CONSTRUCTION

DESIGNED BY S. DEBNATH
DRAWN BY B. ITURALDE
CHECKED BY H. LOPEZ
IN CHARGE R. BARLAAN
DATE 20130710

LICENSED ARCHITECT SANJEEV DEBNATH No. C21523 STATE OF CALIFORNIA

Skanska Shimmick Herzog
1436 California Circle
Milpitas, California 95035
A Joint Venture

Anil Verma Associates, Inc.
1970 Broadway, Suite 525, Oakland, CA 94612
Phone: (510) 835-2537 Fax: (510) 835-2339

SUBMITTED

Lockwood, Andrews & Newnam, Inc. A LEO A DALY COMPANY
T·Y·LIN INTERNATIONAL

APPROVED

VTA BART SILICON VALLEY

BART SILICON VALLEY BERRYESSA EXTENSION

LINE, TRACK, STATIONS AND SYSTEMS
DESIGN UNIT 023
ANCILLARY BUILDING

FIRST FLOOR
REFLECTED CEILING PLAN

CADD FILENAME C700-S-DB-A813X.dwg
SIZE D | SCALE 1/8"=1'-0"
CONTRACT NO. C700 | REV. 0
AREA CODE DB | SHEET NO. A813X | PAGE NO. 0585

JosephG Jun 26, 2013 – 1:03pm G:\Current Projects\VTA-Berryessa Extension Project\Station – Milpitas\CAD\Drawings Out\13-0710 C700 Milpitas Station – RFC Submit\C700-S-DB-A813X.dwg

Not For Construction

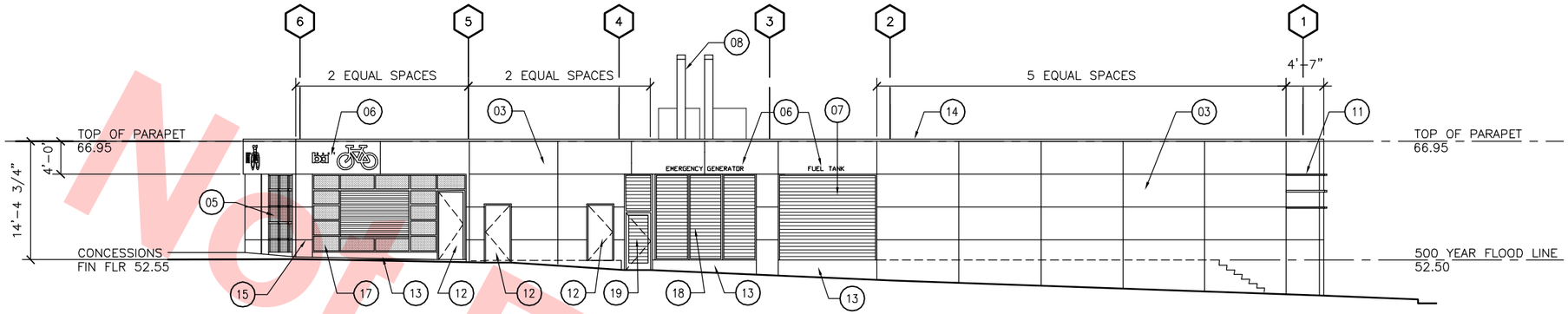

NORTH ELEVATION (A / DB-A821)
SCALE: 1/8"=1'-0"
DB-A811X
DB-A812X

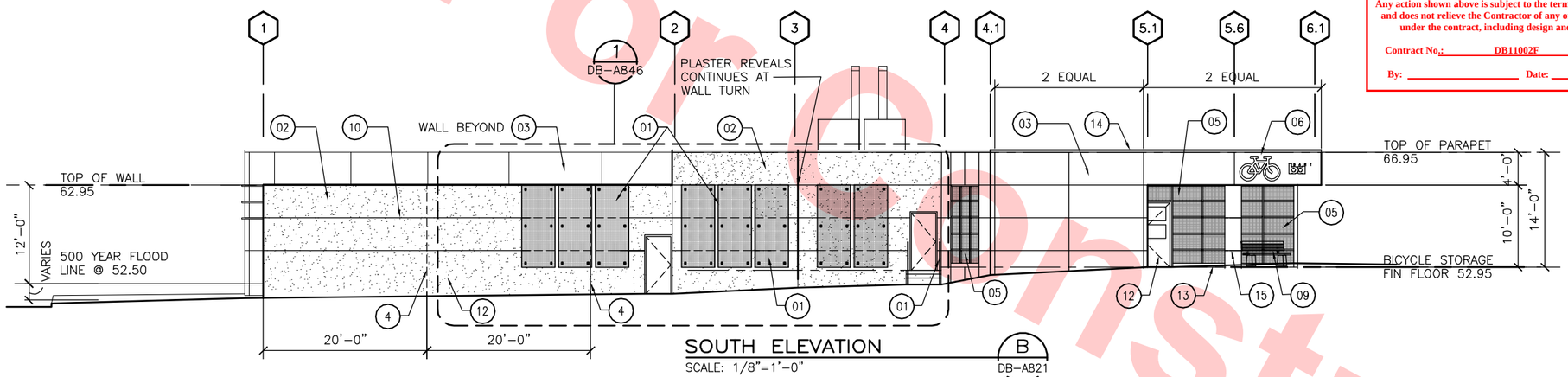

SOUTH ELEVATION (B / DB-A821)
SCALE: 1/8"=1'-0"
DB-A811X
DB-A812X

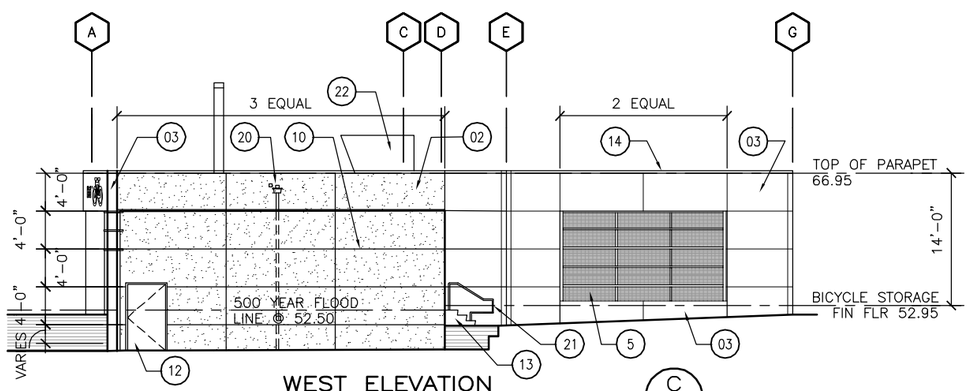

WEST ELEVATION (C / DB-A821)
SCALE: 1/8"=1'-0"
DB-A811X
DB-A812X

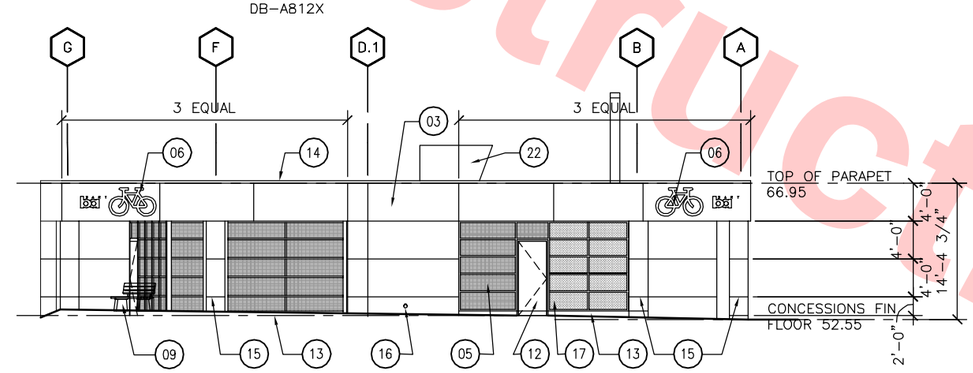

EAST ELEVATION (D / DB-A821)
SCALE: 1/8"=1'-0"
DB-A811X
DB-A812X

Santa Clara Valley Transportation Authority

____NO EXCEPTIONS TAKEN (NET)
____MAKE CORRECTIONS NOTED (MCN)
____AMEND AND RESUBMIT (A/R)

Any action shown above is subject to the terms of the contract and does not relieve the Contractor of any of its obligations under the contract, including design and detailing.

Contract No.: DB11002F

By: _____ Date: _____

KEY NOTES

01 GREEN WALL SYSTEM
02 PLASTER WALL FINISH WITH INTEGRAL COLOR FINISH COAT TO MATCH WP-1
03 METAL WALL PANEL. WP-1
04 CMU CONTROL JOINT AND PLASTER JOINT
05 DECORATIVE STAINLESS STEEL MESH PM-1
06 SIGNAGE. SEE SIGNAGE DRAWINGS FOR DETAILS
07 ROLLING DOOR. COLOR TO MATCH WP-1
08 GENERATOR EXHAUST PIPE. P-1
09 BENCH
10 3/4" EXTRUDED ALUMINUM PLASTER REVEAL
11 EXTRUDED ALUMINUM FIN. KYNAR FINISH, COLOR TO MATCH WP-1.
12 METAL DOOR, SEE DOOR SCHEDULE FOR FINISH.
13 CONCRETE CURB/EXPOSED CONCRETE. WF-1
14 METAL COPING (FACTORY CURVED AT RADIUS WALL) COLOR TO MATCH WP-1
15 CIRCULAR COLUMN CLADDING. WP-1
16 ROOF OVERFLOW BRASS DRAIN SPOUT
17 STAINLESS STEEL TEXTURED METAL PM-2
18 REMOVABLE METAL LOUVER. COLOR TO MATCH WP-1
19 METAL LOUVER DOOR WITH LOUVER TRANSOM. COLOR TO MATCH WP-1
20 DRAIN AND OVERFLOW SCUPPER WITH HEAD AND 2" X 3" DOWNSPOUT. COLOR TO MATCH WP-1
21 STAIR RAILINGS TYP. P-2
22 MECHANICAL VENT DUCT. P-1

EXTERIOR FINISH LEGEND

CODE	MANUFACTURER	PRODUCT DESC	COLOR/FIN
PAINT			
P-1	BENJAMIN MOORE	FLAT	PLATNUM GRAY
P-2	BENJAMIN MOORE	FLAT	HARBOR GRAY
P-3	BENJAMIN MOORE	FLAT	WHITE
WALL			
WP-1	ALCOA ARCHITECT PRODUCT	REYNOBOND PE ALUM. COMPOSITE	ANODIC SATIN
WF-1	GRAY CONCRETE	SMOOTH FINISH	WITH ANTI-GRAFITTI COATING
LOUVERS AND FRAMES			
PAINT FINISH TO MATCH WP-1 COLOR			
DECORATIVE STAINLESS STEEL MESH			
PM-1	MCNICHOLS	WIREMESH 3x1 1/2	STAINLESS STEEL 304
PM-2	MCNICHOLS	TEXTURED METAL 16 GA.	STAINLESS STEEL 304
METALS AND MECHANICAL EQUIPMENTS AT ROOF			
P-1 UNLESS NOTED OTHERWISE			
EXPOSED METAL/STEEL AT EXTERIOR WALL			
PAINTED TO MATCH ADJACENT FINISH SURFACE			

8' 0' 8' 16'
GRAPHIC SCALE

Not For Construction

REV	DATE	BY	SUB	APP	DESCRIPTION
0	20130710				READINESS FOR CONSTRUCTION

DESIGNED BY S. DEBNATH
DRAWN BY B. ITURALDE
CHECKED BY H. LOPEZ
IN CHARGE R. BARLAAN
DATE 20130710

LICENSED ARCHITECT SOMESH DEBNATH No. C21523 STATE OF CALIFORNIA

Skanska Shimmick Herzog
1436 California Circle
Milpitas, California 95035
A Joint Venture

Anil Verma Associates, Inc.
1970 Broadway, Suite 325 Oakland, CA 94612
Phone: (510) 835-2537 Fax: (510) 835-2339
SUBMITTED

Lockwood, Andrews & Newnam, Inc. A LEO A DALY COMPANY
T·Y·LIN INTERNATIONAL
APPROVED

VTA BART SILICON VALLEY
BART SILICON VALLEY BERRYESSA EXTENSION

LINE, TRACK, STATIONS AND SYSTEMS
DESIGN UNIT 023
ANCILLARY BUILDING

ELEVATIONS

CADD FILENAME C700-S-DB-A821.dwg
SIZE D | SCALE 1/8"=1'-0"
CONTRACT NO. C700 | REV. 0
AREA CODE DB | SHEET NO. A821 | PAGE NO. 0586

JosephG Jul 10, 2013 - 2:34pm G:\Current Projects\VTA-Berryessa Extension Project\Station - Milpitas\CAD\Drawings Out\13-0710 C700 Milpitas Station - RFC Submit\C700-S-DB-A821.dwg

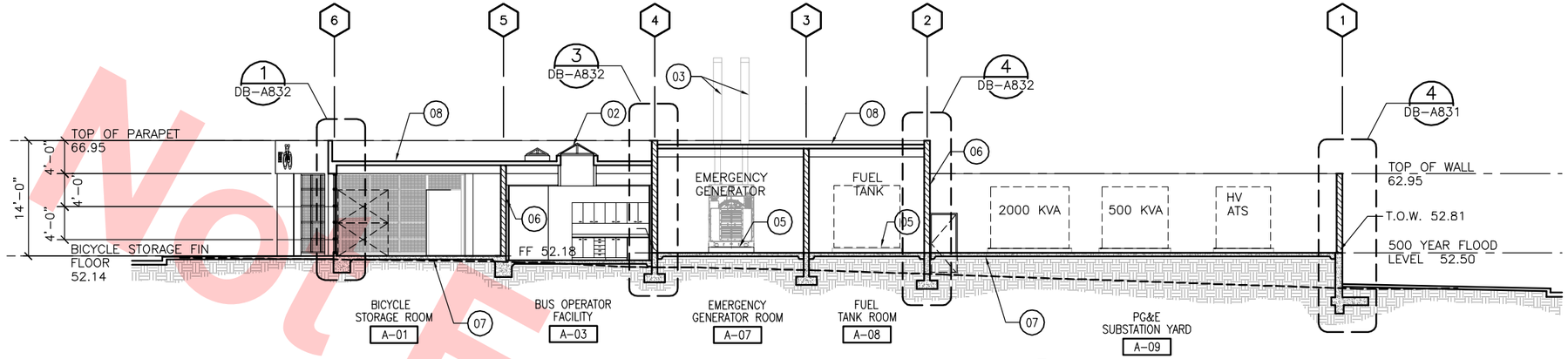

SECTION A DB-A822
SCALE: 1/8"=1'-0"
DB-A811X
DB-A812X

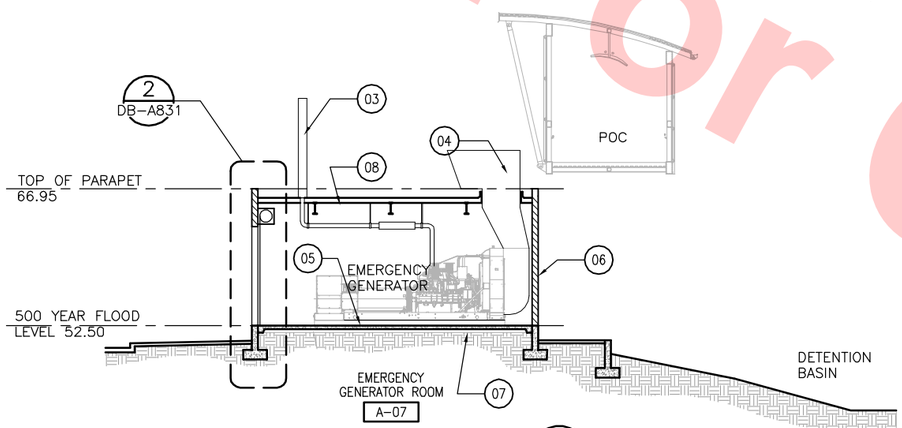

SECTION B DB-A822
SCALE: 1/8"=1'-0"
DB-A811X
DB-A812X

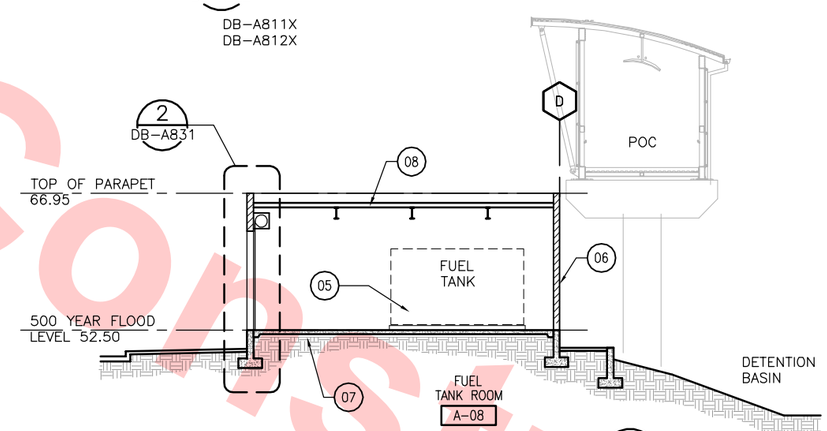

SECTION C DB-A822
SCALE: 1/8"=1'-0"
DB-A811X
DB-A812X

KEY NOTES

01 CEMENT PLASTER FINISH
02 UNIT SKYLIGHT NO.1. SEE DETAIL 8/DB-A841
03 GENERATOR EXHAUST FLUE. SEE DETAIL 3/DB-A842
04 AIR VENTILATOR DUCT THRU ROOF. SEE DETAIL 4/DB-A842
05 CONCRETE PAD
06 CMU WALL
07 SLAB ON GRADE. SUB-GRADE PER GEOTECHNICAL REPORT RECOMMENDATIONS.
08 MEMBRANE ROOFING ON RIGID INSULATION OVER STEEL DECKING

Santa Clara Valley Transportation Authority

____NO EXCEPTIONS TAKEN (NET)
____MAKE CORRECTIONS NOTED (MCN)
____AMEND AND RESUBMIT (A/R)

Any action shown above is subject to the terms of the contract and does not relieve the Contractor of any of its obligations under the contract, including design and detailing.

Contract No.: DB11002F

By: _____ **Date:** _____

Not For Construction

REV	DATE	BY	SUB	APP	DESCRIPTION
0	20130710				READINESS FOR CONSTRUCTION

DESIGNED BY S. DEBNATH
DRAWN BY B. ITURALDE
CHECKED BY E. LOPEZ
IN CHARGE R. BARLAAN
DATE 20130710

LICENSED ARCHITECT SANJESH DEBNATH No. C21523 STATE OF CALIFORNIA

Skanska Shimmick Herzog
1436 California Circle
Milpitas, California 95035
A Joint Venture

Anil Verma Associates, Inc.
1970 Broadway, Suite 525, Oakland, CA 94612
Phone: (510) 835-2537 Fax: (510) 835-2339
SUBMITTED

Lockwood, Andrews & Newnam, Inc. A LEO A DALY COMPANY
T·Y·LIN INTERNATIONAL
APPROVED

VTA BART SILICON VALLEY
BART SILICON VALLEY BERRYESSA EXTENSION

LINE, TRACK, STATIONS AND SYSTEMS
DESIGN UNIT 023
ANCILLARY BUILDING

SECTIONS

CADD FILENAME C700-S-DB-A822.dwg
SIZE D | SCALE 1/8"=1'-0"
CONTRACT NO. C700 | REV. 0
AREA CODE DB | SHEET NO. A822 | PAGE NO. 0587

JosephG Jun 26, 2013 – 1:03pm G:\Current Projects\VTA-Berryessa Extension Project\Station – Milpitas\CAD\Drawings Out\13-0710 C700 Milpitas Station – RFC Submit\C700-S-DB-A822.dwg

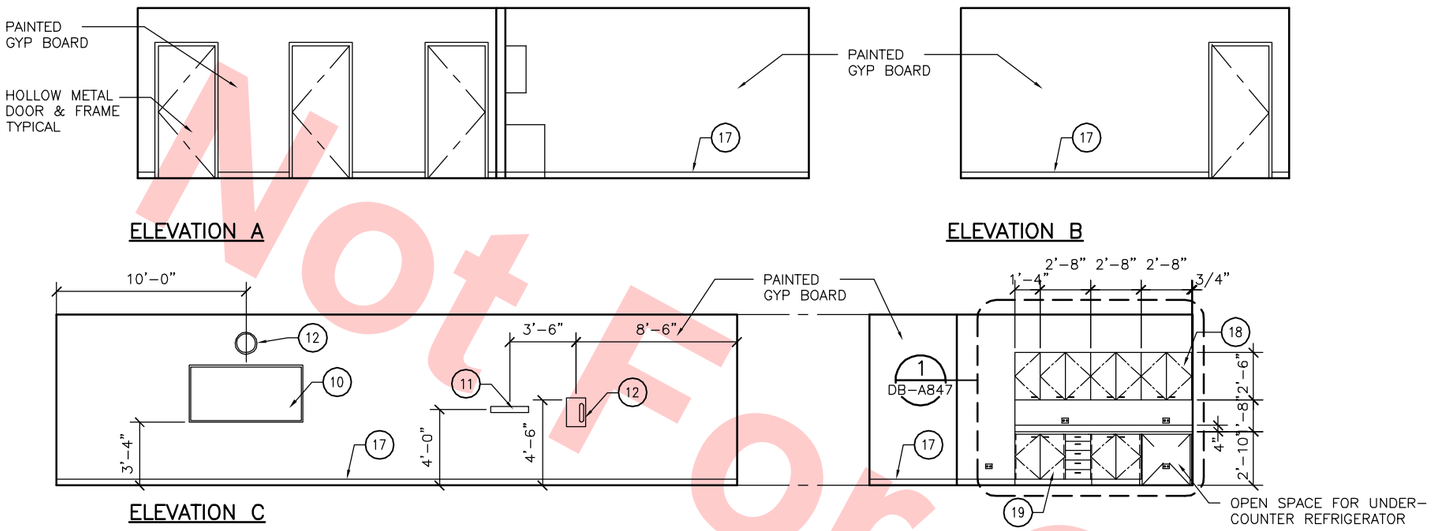

INTERIOR ELEVATIONS 2 DB-A825

BREAK ROOM
SCALE: 1/4"=1'-0"

DB-A825

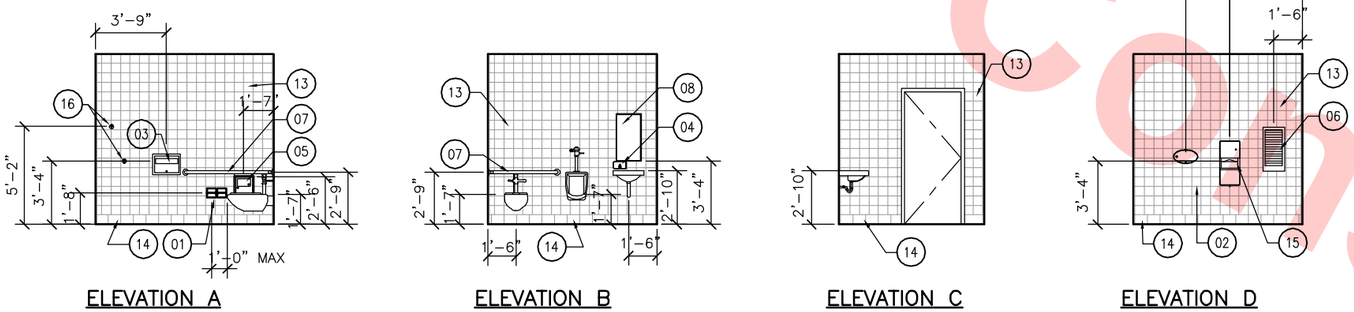

ELEVATION A ELEVATION B ELEVATION C ELEVATION D

INTERIOR ELEVATIONS 3 DB-A825

WOMEN'S RESTROOM
SCALE: 1/4"=1'-0"

DB-A825

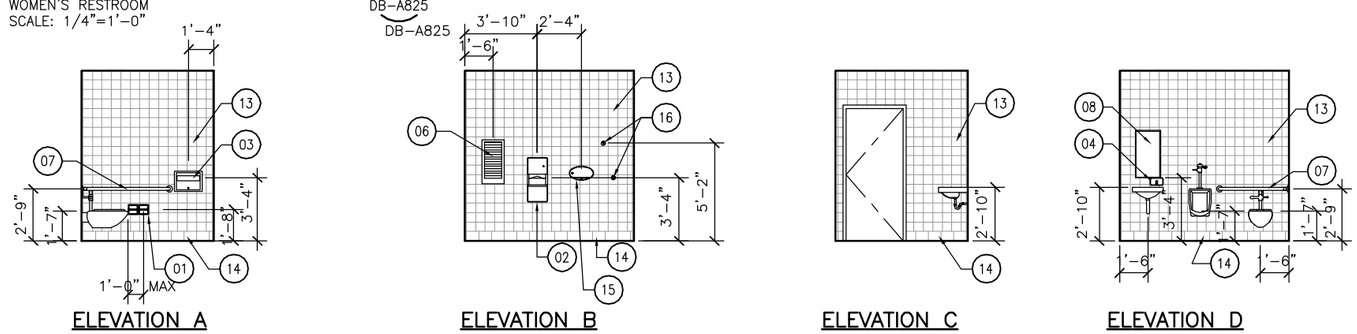

ELEVATION A ELEVATION B ELEVATION C ELEVATION D

INTERIOR ELEVATIONS 4 DB-A825

MEN'S RESTROOM
SCALE: 1/4"=1'-0"

DB-A825

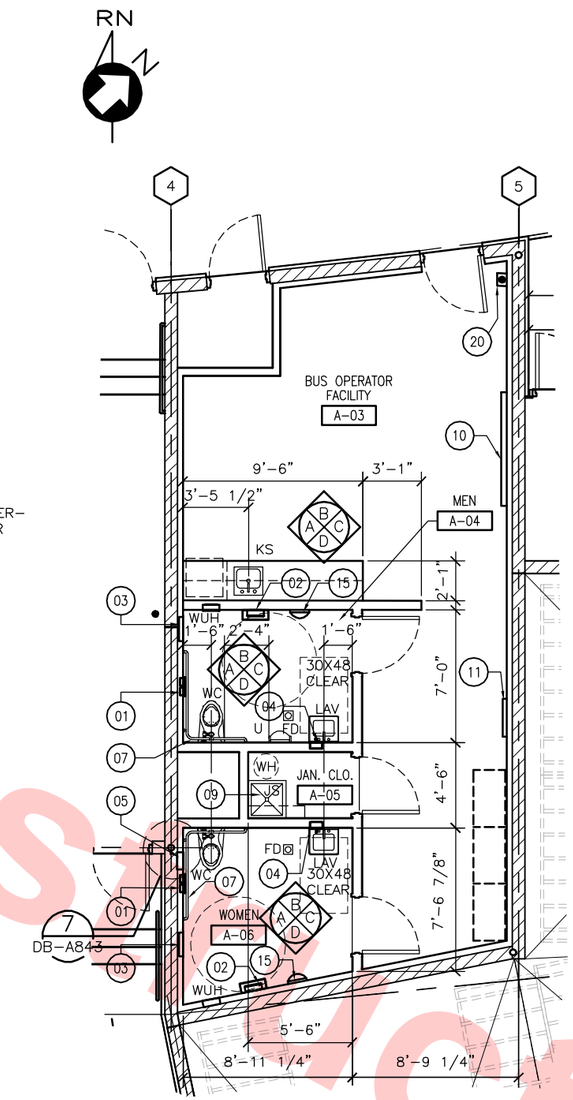

ENLARGED FLOOR PLAN 1 DB-A825

BUS OPERATOR FACILITY
SCALE: 1/4"=1'-0"

DB-A811X

MECH/PLUMBING FIXTURES

LAV	LAVATORY
WC	WATER CLOSET
U	URINAL
FD	FLOOR DRAIN
KS	KITCHEN SINK
WUH	WALL UNIT HEATER

KEY NOTES

01. RECESSED TOILET TISSUE DISPENSER. BOBRICK B-27460
02. PAPER TOWEL DISPENSER/WASTE RECEPTACLE. BOBRICK B-3944
03. RECESSED SEAT COVER DISPENSER. BOBRICK B-301
04. SURFACE MOUNTED SOAP DISPENSER. BOBRICK B-2112
05. RECESSED SANITARY NAPKIN DISPOSAL. BOBRICK B-353
06. WALL HEATER
07. GRAB BAR. BOBRICK B-5897 (42"x54")
08. STAINLESS STEEL FRAME MIRROR W/ STAINLESS STEEL SHELF. BOBRICK B-165 1830
09. S.S. JANITOR'S MOP RACK AND SHELF. BOBRICK B-233X36
10. TACKBOARD 6' LONG
11. COAT RACK WITH SHELF. SAFCO CONTEMPO MODEL S4221
12. BATTERY OPERATED 12.25" DIA (MIN) WALL CLOCK SEIKO QXR131KLH BLACK AND SILVER
13. 6"x6" WALL TILE. CROSSVILLE TRUFFLE A876
14. 6"x8" WALL BASE TILE.
15. WARM AIR HAND DRYER. SLOAN OPTIMA EHD-401
16. HEAVY DUTY CLOTHES HOOKS. BOBRICK B-211
17. 4" RUBBER BASE
18. WALL-HUNG CABINETS
19. BASE CABINETS
20. FIRE EXTINGUISHER CABINET

GENERAL NOTES

1. PROVIDE 6"x14 GA BACKING PLATE SECURED TO METAL STUDS (2 MIN) FOR GRAB BAR MOUNTING.
2. PROVIDE 4" X 20 GA MINIMUM METAL STUDS WHERE WALL HUNG CABINETS OCCUR.
3. RECESSED TOILET ACCESSORIES SHALL BE SECURED TO METAL STUDS.

Santa Clara Valley Transportation Authority

____NO EXCEPTIONS TAKEN (NET)
____MAKE CORRECTIONS NOTED (MCN)
____AMEND AND RESUBMIT (A/R)

Any action shown above is subject to the terms of the contract and does not relieve the Contractor of any of its obligations under the contract, including design and detailing.

Contract No.: DB11002F

By: _____ **Date:** _____

4 0 4 8
GRAPHIC SCALE

Not For Construction

REV	DATE	BY	SUB	APP	DESCRIPTION
0	20130710				READINESS FOR CONSTRUCTION

DESIGNED BY S. DEBNATH
DRAWN BY G. LEVASHOV
CHECKED BY H. LOPEZ
IN CHARGE R. BARLAAN
DATE 20130710

LICENSED ARCHITECT SAMESH DEBNATH No. C21523 STATE OF CALIFORNIA

Skanska Shimmick Herzog
1436 California Circle
Milpitas, California 95035
A Joint Venture

Anil Verma Associates, Inc.
1970 Broadway, Suite 535, Oakland, CA 94612
Phone: (510) 835-2537 Fax: (510) 835-2339
SUBMITTED

Lockwood, Andrews & Newnam, Inc. A LEO A DALY COMPANY
T·Y·LIN INTERNATIONAL
APPROVED

VTA BART SILICON VALLEY
BART SILICON VALLEY BERRYESSA EXTENSION

LINE, TRACK, STATIONS AND SYSTEMS
DESIGN UNIT 023
ANCILLARY BUILDING

ENLARGED PLAN AND INTERIOR ELEVATIONS
SHEET 1 OF 2

CADD FILENAME C700-S-DB-A825.dwg
SIZE D | SCALE 1/4"=1'-0"
CONTRACT NO. C700 | REV. 0
AREA CODE DB | SHEET NO. A825 | PAGE NO. 0588

JosephG Jun 26, 2013 - 1:03pm G:\Current Projects\VTA-Berryessa Extension Project\Station - Milpitas\CAD\Drawings Out\13-0710 C700 Milpitas Station - RFC Submit\C700-S-DB-A825.dwg

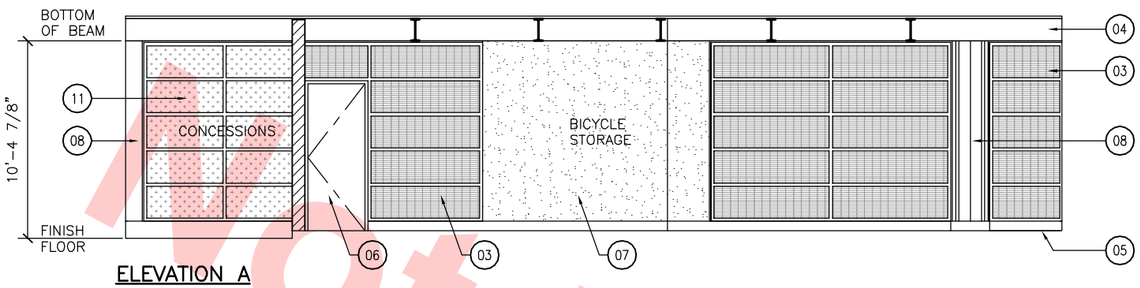

ELEVATION A

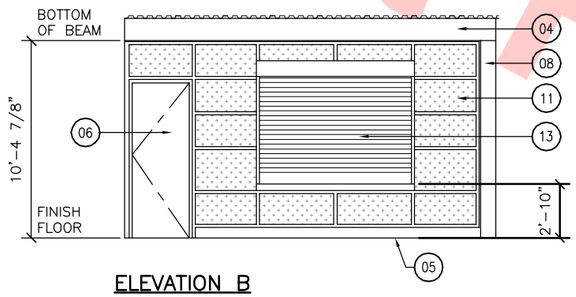

ELEVATION B

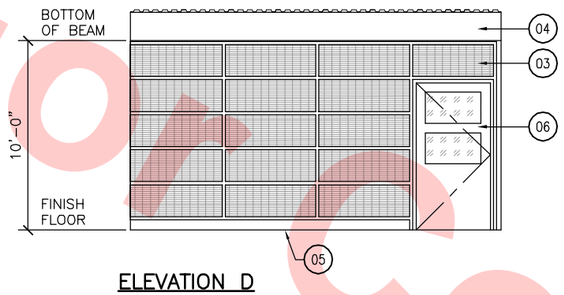

ELEVATION D

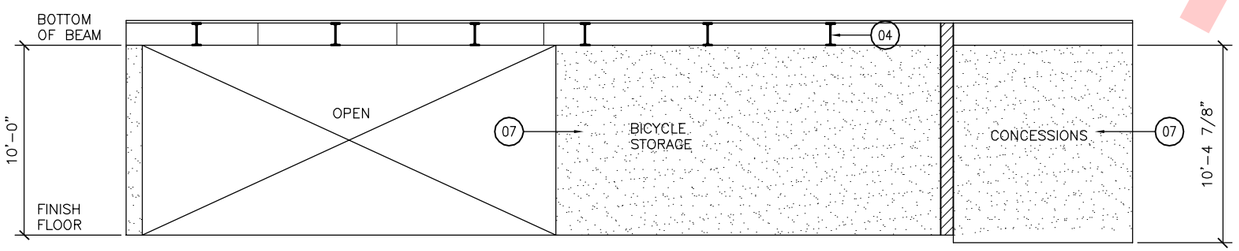

ELEVATION C

INTERIOR ELEVATIONS 2 DB-A826
BICYCLE STORAGE
SCALE: 1/4"=1'-0"
DB-A826

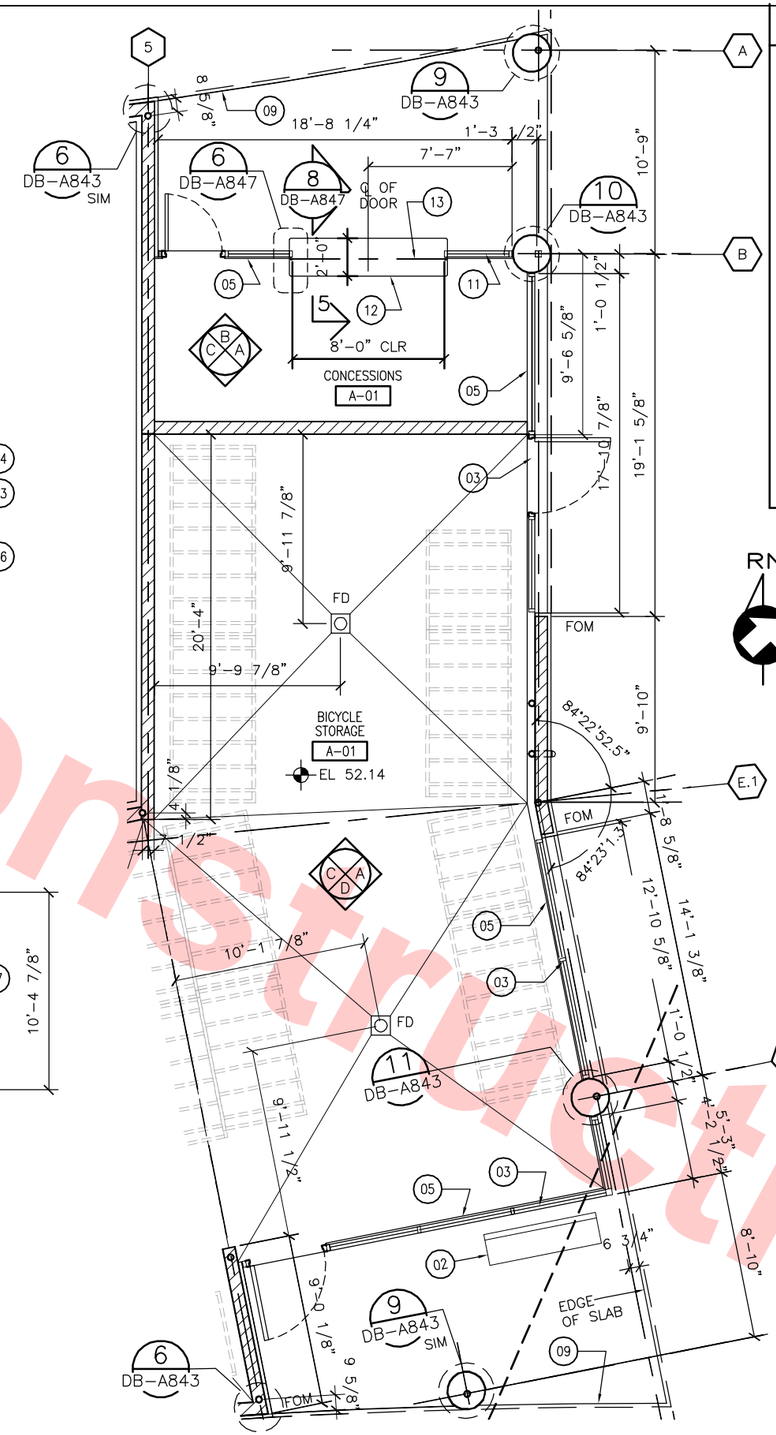

KEY NOTES

01 BIKE RACKS
02 BENCH
03 DECORATIVE STAINLESS STEEL MESH
04 EXPOSED STEEL BEAM
05 CONCRETE CURB
06 HOLLOW METAL DOOR. SEE DOOR SCHEDULE
07 CEMENT PLASTER
08 COLUMN COVER
09 EDGE OF SLAB TO LINE UP WITH RADIUSED F.O.M.
10 FIRE EXTINGUISHER CABINET
11 STAINLESS STEEL TEXTURED METAL
12 STAINLESS STEEL COUNTERTOP
13 STAINLESS STEEL COILING COUNTER DOOR

ENLARGED FLOOR PLAN 1 DB-A826
BICYCLE STORAGE
SCALE: 1/4"=1'-0"
DB-A811X

4' 0' 4' 8'
GRAPHIC SCALE

Santa Clara Valley Transportation Authority

____NO EXCEPTIONS TAKEN (NET)
____MAKE CORRECTIONS NOTED (MCN)
____AMEND AND RESUBMIT (A/R)

Any action shown above is subject to the terms of the contract and does not relieve the Contractor of any of its obligations under the contract, including design and detailing.

Contract No.: DB11002F

By: _____ **Date:** _____

Not For Construction

REV	DATE	BY	SUB	APP	DESCRIPTION
0	20130710				READINESS FOR CONTRUCTION

DESIGNED BY S. DEBNATH
DRAWN BY G. LEVASHOV
CHECKED BY E. LOPEZ
IN CHARGE R. BARLAAN
DATE 20130710

LICENSED ARCHITECT SOMESH DEBNATH No. C21523 STATE OF CALIFORNIA

Skanska Shimmick Herzog
1436 California Circle
Milpitas, California 95035
A Joint Venture

Anil Verma Associates, Inc.
1970 Broadway, Suite 535, Oakland, CA 94612
Phone: (510) 835-2537 Fax: (510) 535-2339
SUBMITTED

Lockwood, Andrews & Newnam, Inc. A LEO A DALY COMPANY
T·Y·LIN INTERNATIONAL
APPROVED

VTA BART SILICON VALLEY
BART SILICON VALLEY BERRYESSA EXTENSION

LINE, TRACK, STATIONS AND SYSTEMS
DESIGN UNIT 023
ANCILLARY BUILDING

ENLARGED PLAN AND INTERIOR ELEVATIONS
SHEET 2 OF 2

CADD FILENAME C700-S-DB-A826.dwg
SIZE D | SCALE 1/4"=1'-0"
CONTRACT NO. C700 | REV. 0
AREA CODE DB | SHEET NO. A826 | PAGE NO. 0589

JosephG Jun 26, 2013 - 1:04pm G:\Current Projects\VTA-Berryessa Extension Project\Station - Milpitas\CAD\Drawings Out\13-0710 C700 Milpitas Station - RFC Submit\C700-S-DB-A826.dwg

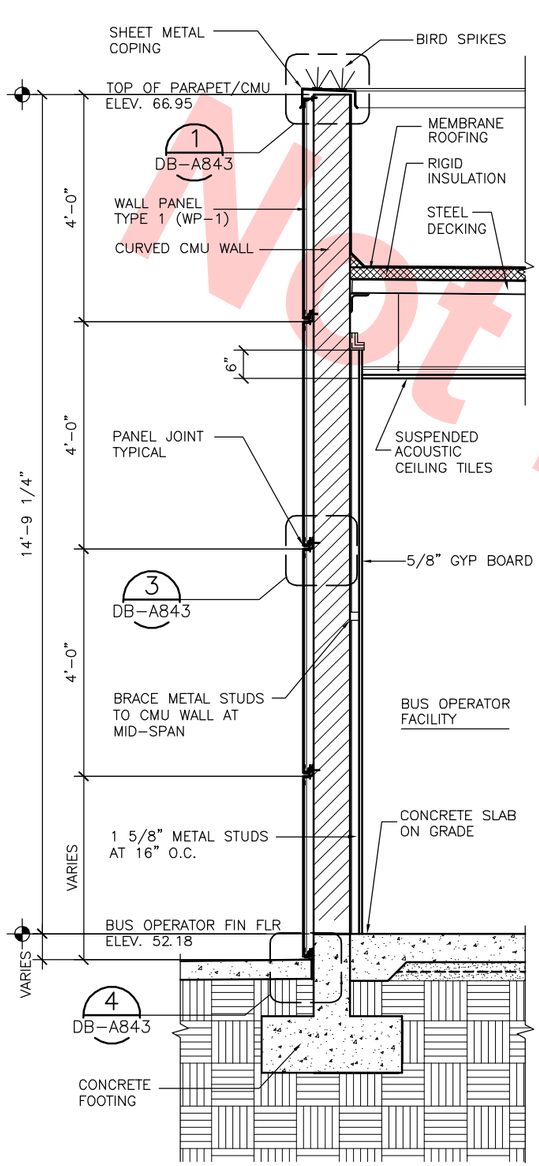

DETAILED WALL SECTION (1 / DB–A831)

SCALE: 3/4" = 1'–0"

DB–A812X

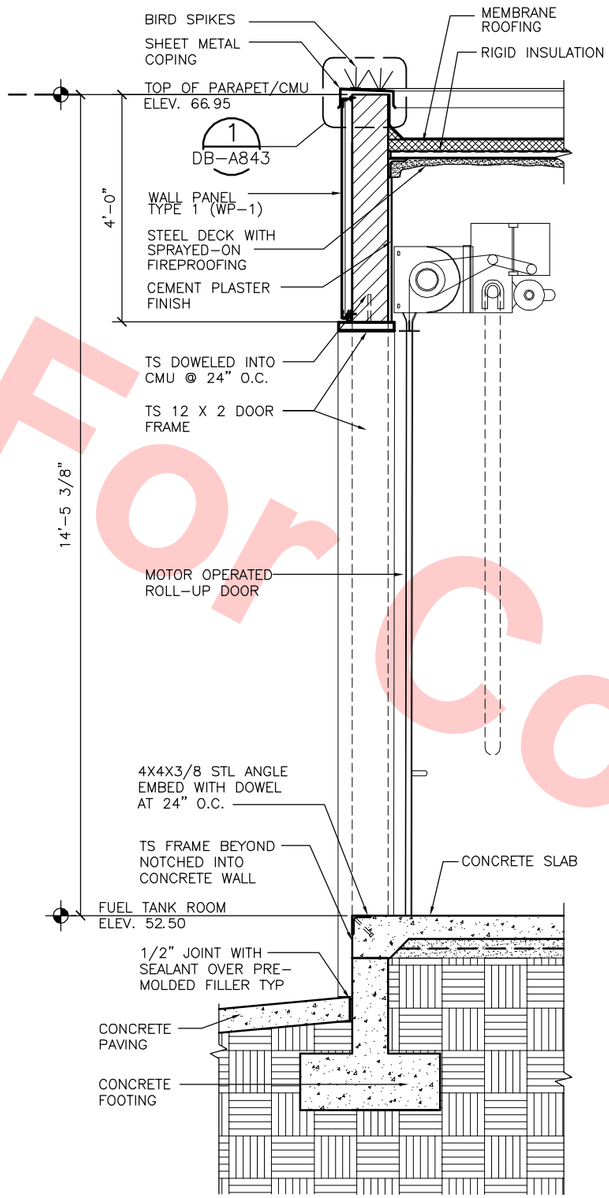

DETAILED WALL SECTION (2 / DB–A831)

SCALE: 3/4" = 1'–0"

DB–A812X

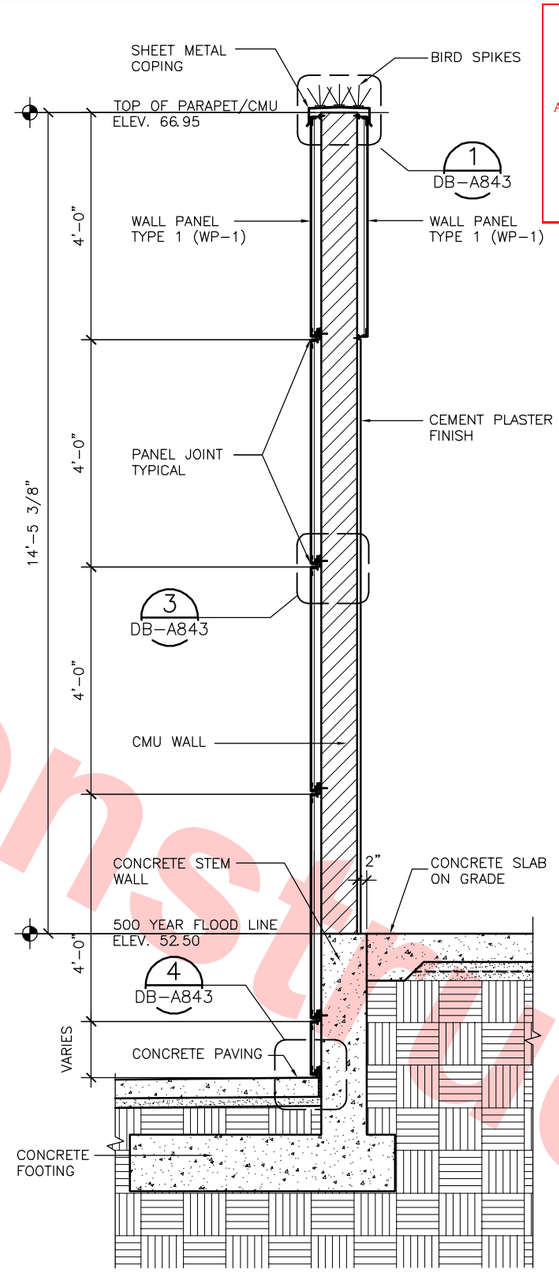

DETAILED WALL SECTION (3 / DB–A831)

SCALE: 3/4" = 1'–0"

DB–A812X

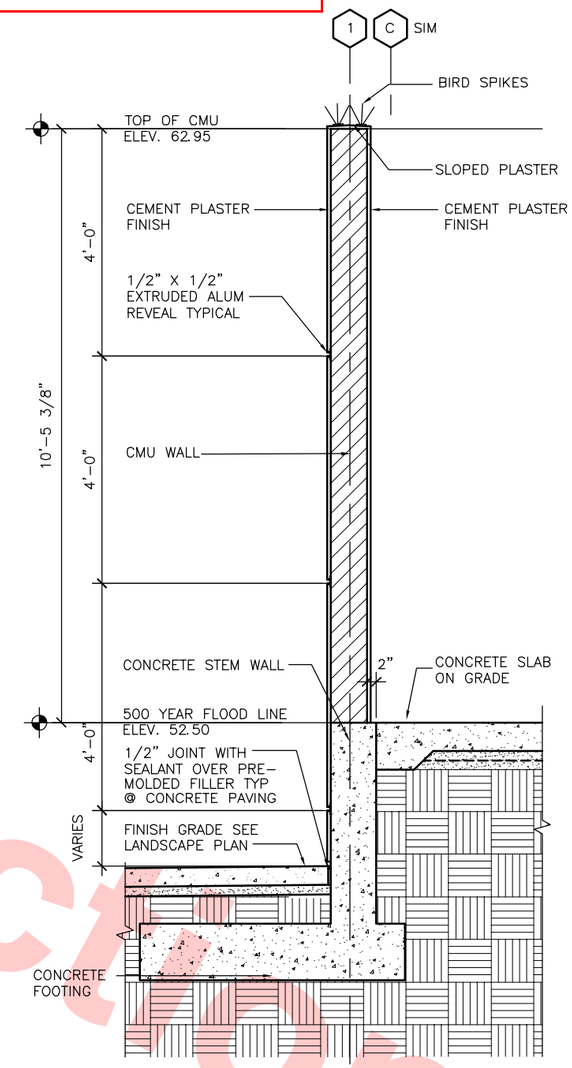

DETAILED WALL SECTION (4 / DB–A831)

SCALE: 3/4" = 1'–0"

DB–A812X

Santa Clara Valley Transportation Authority

____NO EXCEPTIONS TAKEN (NET)
____MAKE CORRECTIONS NOTED (MCN)
____AMEND AND RESUBMIT (A/R)

Any action shown above is subject to the terms of the contract and does not relieve the Contractor of any of its obligations under the contract, including design and detailing.

Contract No.: DB11002F

By: _____ Date: _____

Not For Construction

REV	DATE	BY	SUB	APP	DESCRIPTION
0	20130710				READINESS FOR CONSTRUCTION

DESIGNED BY S. DEBNATH
DRAWN BY B. ITURALDE
CHECKED BY E. LOPEZ
IN CHARGE R. BARLAAN
DATE 20130710

LICENSED ARCHITECT — SOMESH DEBNATH — No. C21523 — STATE OF CALIFORNIA

Skanska Shimmick Herzog
1436 California Circle
Milpitas, California 95035
A Joint Venture

Anil Verma Associates, Inc.
1970 Broadway, Suite 525, Oakland, CA 94612
Phone: (510) 835-2537 Fax: (510) 835-2339

Lockwood, Andrews & Newnam, Inc. — T·Y·LIN INTERNATIONAL

SUBMITTED _____ APPROVED _____

VTA BART SILICON VALLEY
BART SILICON VALLEY BERRYESSA EXTENSION

LINE, TRACK, STATIONS AND SYSTEMS
DESIGN UNIT 023
ANCILLARY BUILDING

DETAILED WALL SECTIONS
SHEET 1 OF 3

CADD FILENAME C700–S–DB–A831.dwg
SIZE D | SCALE 3/4"=1'–0"
CONTRACT NO. C700 | REV. 0
AREA CODE DB | SHEET NO. A831 | PAGE NO. 0590

JosephC Jun 26, 2013 – 1:04pm G:\Current Projects\VTA–Berryessa Extension Project\Station – Milpitas\CAD\Drawings Out\13–0710 C700 Milpitas Station – RFC Submit\C700–S–DB–A831.dwg

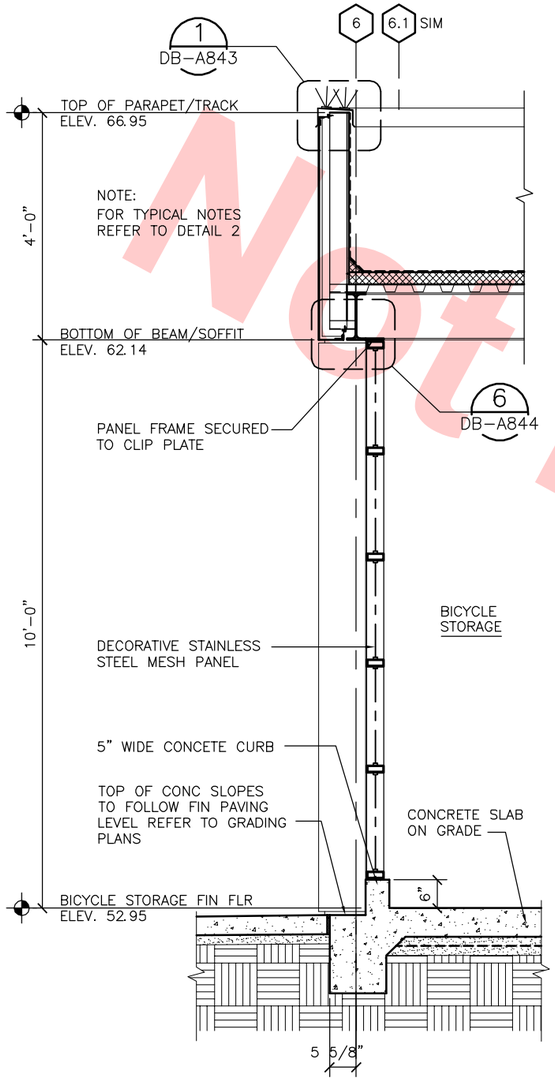

DETAILED WALL SECTION (1 / DB–A832)

SCALE: 3/4" = 1'–0"

DB–A812X

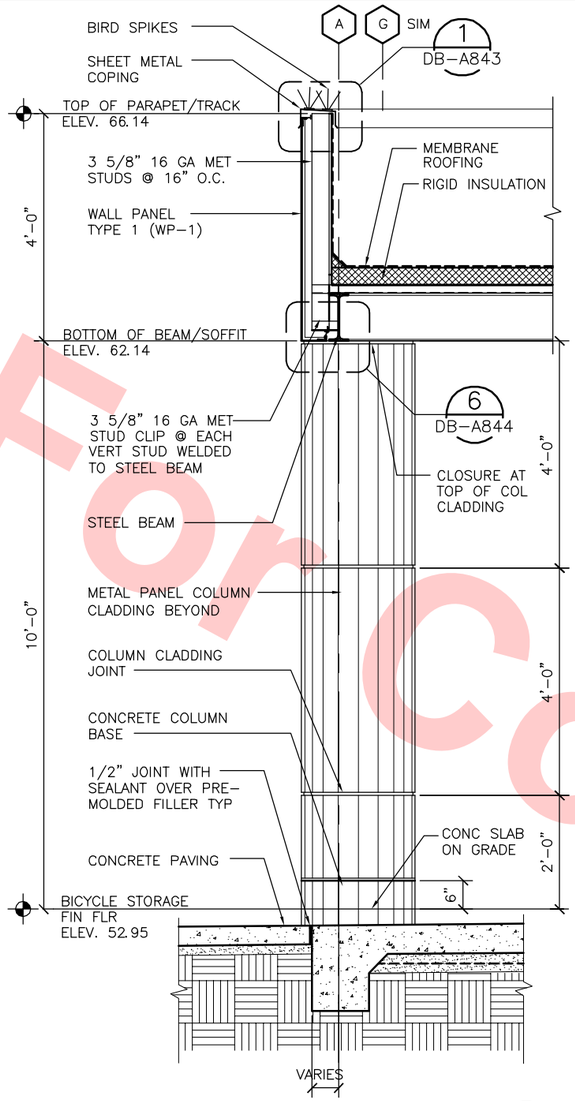

DETAILED WALL SECTION (2 / DB–A832)

SCALE: 3/4" = 1'–0"

DB–A812X

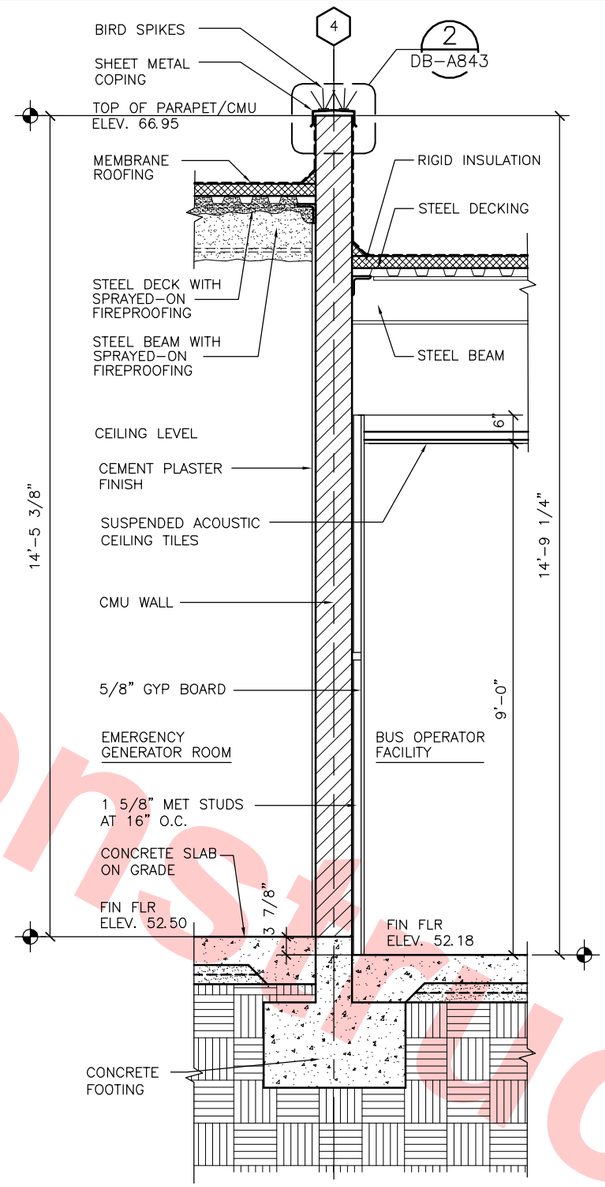

DETAILED WALL SECTION (3 / DB–A832)

SCALE: 3/4" = 1'–0"

DB–A812X

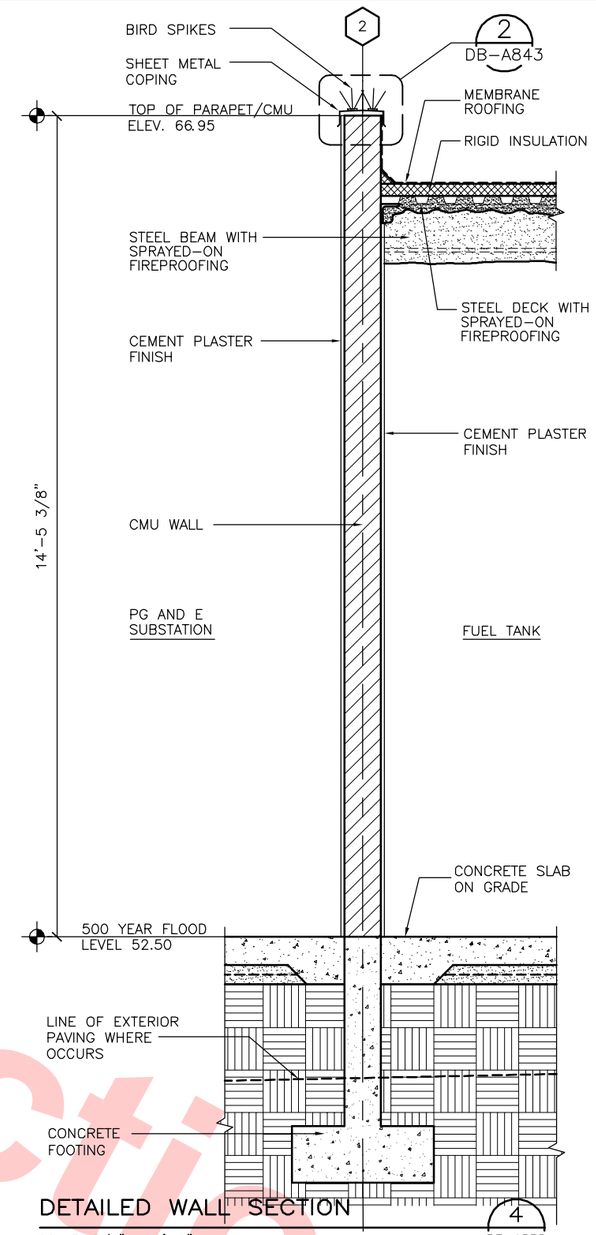

DETAILED WALL SECTION (4 / DB–A832)

SCALE: 3/4" = 1'–0"

DB–A812X

Santa Clara Valley Transportation Authority

____NO EXCEPTIONS TAKEN (NET)
____MAKE CORRECTIONS NOTED (MCN)
____AMEND AND RESUBMIT (A/R)

Any action shown above is subject to the terms of the contract and does not relieve the Contractor of any of its obligations under the contract, including design and detailing.

Contract No.: DB11002F

By: _____ Date: _____

Not For Construction

REV	DATE	BY	SUB	APP	DESCRIPTION
0	20130430				READINESS FOR CONSTRUCTION

DESIGNED BY S. DEBNATH
DRAWN BY B. ITURALDE
CHECKED BY E. LOPEZ
IN CHARGE R. BARLAAN
DATE 20130430

LICENSED ARCHITECT DINESH DEBNATH No. C21523 STATE OF CALIFORNIA

Skanska Shimmick Herzog
1436 California Circle
Milpitas, California 95035
A Joint Venture

Anil Verma Associates, Inc.
1970 Broadway, Suite 325 Oakland, CA 94612
Phone: (510) 835-2537 Fax: (510) 835-2339

Lockwood, Andrews & Newnam, Inc. A LEO A DALY COMPANY
T·Y·LIN INTERNATIONAL

SUBMITTED _____ APPROVED _____

VTA BART SILICON VALLEY
BART SILICON VALLEY BERRYESSA EXTENSION

LINE, TRACK, STATIONS AND SYSTEMS
DESIGN UNIT 023
ANCILLARY BUILDING

DETAILED WALL SECTIONS
SHEET 2 OF 3

CADD FILENAME C700–S–DB–A832.dwg
SIZE D | SCALE 3/4"=1'–0"
CONTRACT NO. C700 | REV. 0
AREA CODE DB | SHEET NO. A832 | PAGE NO. 0591

JosephG Jun 26, 2013 – 1:04pm G:\Current Projects\VTA–Berryessa Extension Project\Station – Milpitas\CAD\Drawings Out\13–0710 C700 Milpitas Station – RFC Submit\C700–S–DB–A832.dwg

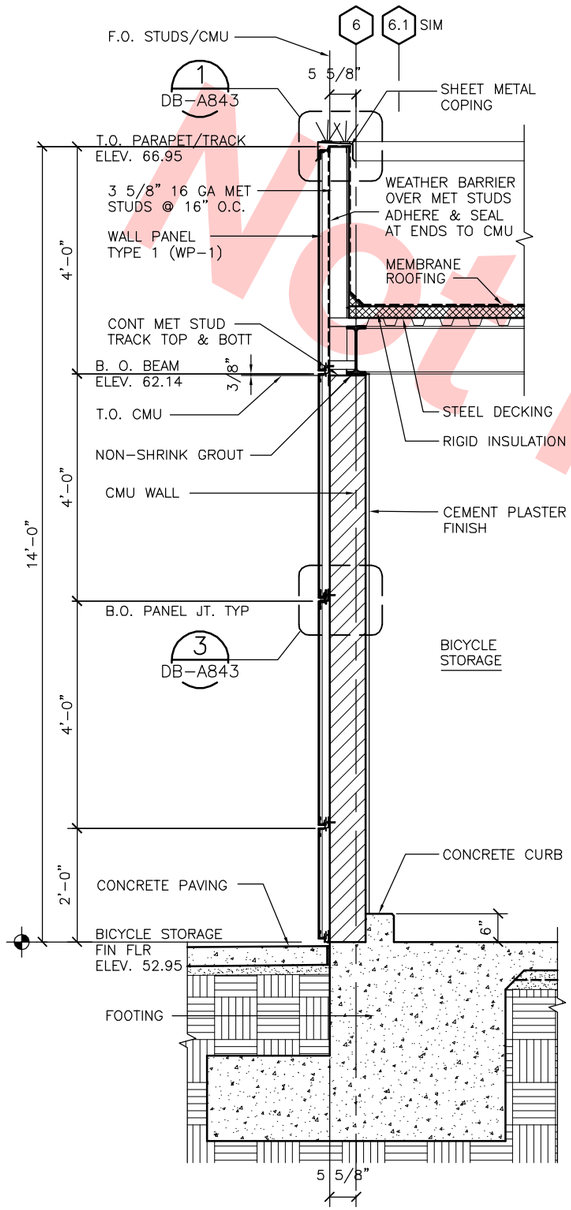

DETAILED WALL SECTION (1 / DB–A833)

SCALE: 3/4" = 1'–0"

DB–A812X

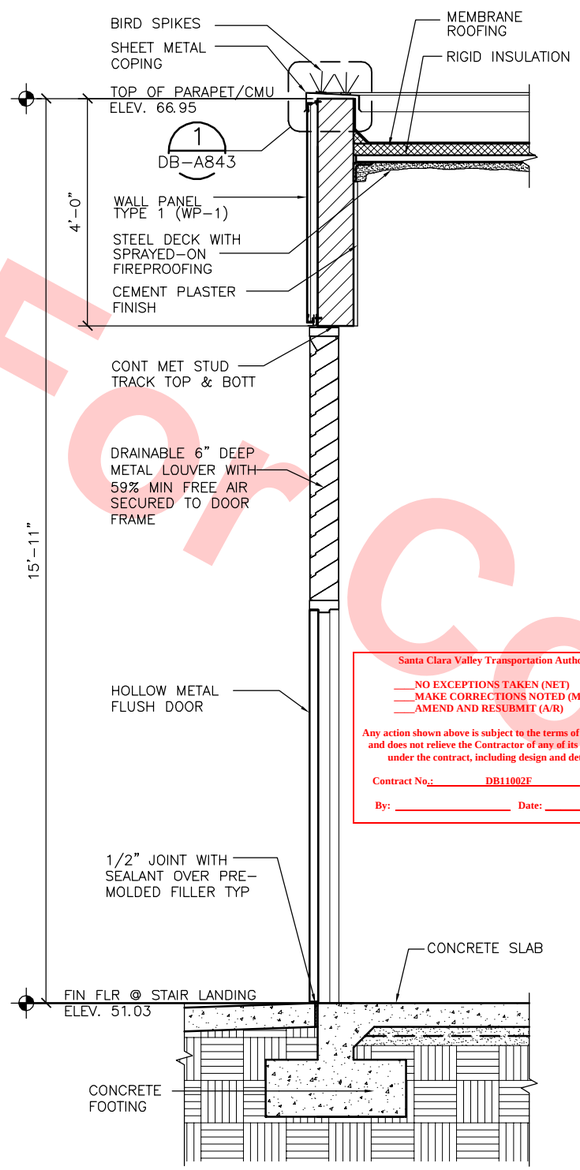

DETAILED WALL SECTION (2 / DB–A833)

SCALE: 3/4" = 1'–0"

DB–A812X

Santa Clara Valley Transportation Authority

____NO EXCEPTIONS TAKEN (NET)
____MAKE CORRECTIONS NOTED (MCN)
____AMEND AND RESUBMIT (A/R)

Any action shown above is subject to the terms of the contract and does not relieve the Contractor of any of its obligations under the contract, including design and detailing.

Contract No.: DB11002F

By: _____ Date: _____

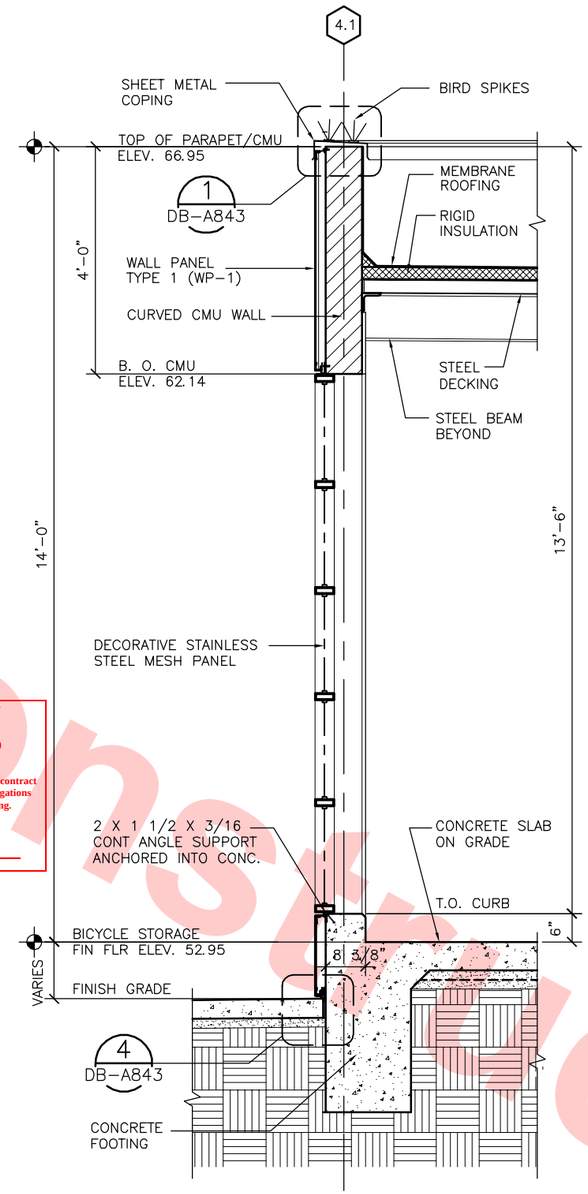

DETAILED WALL SECTION (3 / DB–A833)

SCALE: 3/4" = 1'–0"

DB–A812X

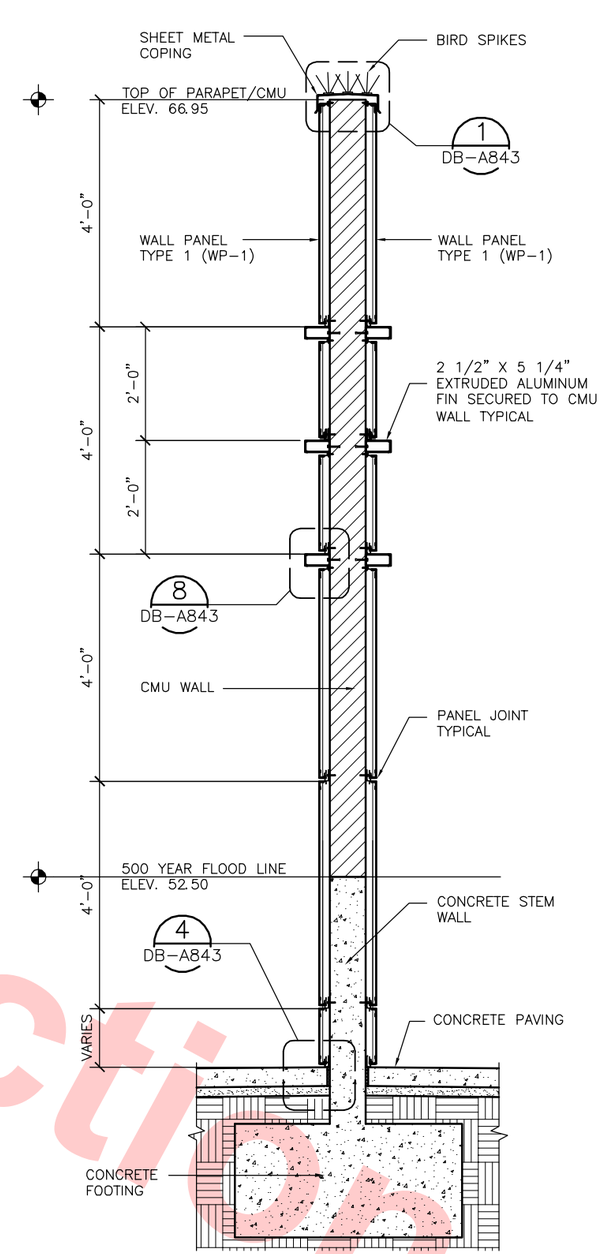

DETAILED WALL SECTION (4 / DB–A833)

SCALE: 3/4" = 1'–0"

DB–A812X

Not For Construction

REV	DATE	BY	SUB	APP	DESCRIPTION
0	20130710				READINESS FOR CONSTRUCTION

DESIGNED BY S. DEBNATH
DRAWN BY B. ITURALDE
CHECKED BY E. LOPEZ
IN CHARGE R. BARLAAN
DATE 20130710

LICENSED ARCHITECT — SOMESH DEBNATH — No. C21523 — STATE OF CALIFORNIA

Skanska Shimmick Herzog
1436 California Circle
Milpitas, California 95035
A Joint Venture

Anil Verma Associates, Inc.
1970 Broadway, Suite 525, Oakland, CA 94612
Phone: (510) 835-2537 Fax: (510) 835-2339

Lockwood, Andrews & Newnam, Inc. — A LAN & BALV COMPANY
T·Y·LIN INTERNATIONAL

SUBMITTED _____ APPROVED _____

VTA BART SILICON VALLEY
BART SILICON VALLEY BERRYESSA EXTENSION

LINE, TRACK, STATIONS AND SYSTEMS
DESIGN UNIT 023
ANCILLARY BUILDING

DETAILED WALL SECTIONS
SHEET 3 OF 3

CADD FILENAME C700–S–DB–A833.dwg
SIZE D | SCALE 3/4"=1'–0"
CONTRACT NO. C700 | REV. 0
AREA CODE DB | SHEET NO. A833 | PAGE NO. 0592

JosephC Jun 26, 2013 – 1:04pm G:\Current Projects\VTA–Berryessa Extension Project\Station – Milpitas\CAD\Drawings Out\13–0710 C700 Milpitas Station – RFC Submit\C700–S–DB–A833.dwg

INTERIOR FINISH SCHEDULE

ROOM NO	ROOM NAME	FLOOR SUB	FLOOR FIN	FLOOR BASE	WALL NORTH MAT	WALL NORTH FIN	WALL EAST MAT	WALL EAST FIN	WALL SOUTH MAT	WALL SOUTH FIN	WALL WEST MAT	WALL WEST FIN	CEILING MAT	CEILING FIN	REMARKS
A01	BICYCLE STORAGE RM.	CONC	CI–1	–	DWM	SS	CP	P–2	DWM	SS	CP/DWM	P/SS	EXP	P–3	
A02	CONCESSIONS	CONC	CI–1	–	CP	P–2	CP	P–2	CP	P–2	CP	P–2	EXP	P–3	
A03	BUS OPERATOR FACILITY	CONC	EFC	EFC	GB	P–2	GB	P–2*	GB	P–2	GB	P–2	ACT	–	* USE EGGSHELL SHEEN
A04	MEN	CONC	T–1	T–2	GB	T–2	GB	T–2	GB	T–2	GB	T–2	GB	P–3	
A05	JANITOR CLOSET	CONC	T–1	T–2	GB	P–2/T–2	GB	P–2/T–2	GB	P–2/T–2	GB	P–2/T–2	GB	P–3	T–2 HEIGHT @ 4'–0" AFF
A06	WOMEN	CONC	T–1	T–2	GB	T–2	GB	T–2	GB	T–2	GB	T–2	GB	P–3	
A07	EMERGENCY GENERATOR ROOM	CONC	SLR	–	CP	P–1	CP	P–1	CP	P–1	CP	P–1	EXP	FP	
A08	FUEL TANK	CONC	SLR	–	CP	P–1	CP	P–1	CP	P–1	CP	P–1	EXP	FP	
A09	PG&E SUBSTATION	CONC	SLR	–	CP	P–1	CP	P–1	CP	P–1	CP	P–1	–	–	
A10	FIRE RISER/ALARM CLOSET	CONC	SLR	–	CP	P–1	CP	P–1	CP	P–1	CP	P–1	EXP	–	

Santa Clara Valley Transportation Authority

____NO EXCEPTIONS TAKEN (NET)
____MAKE CORRECTIONS NOTED (MCN)
____AMEND AND RESUBMIT (A/R)

Any action shown above is subject to the terms of the contract and does not relieve the Contractor of any of its obligations under the contract, including design and detailing.

Contract No.: DB11002F

By: _____ Date: _____

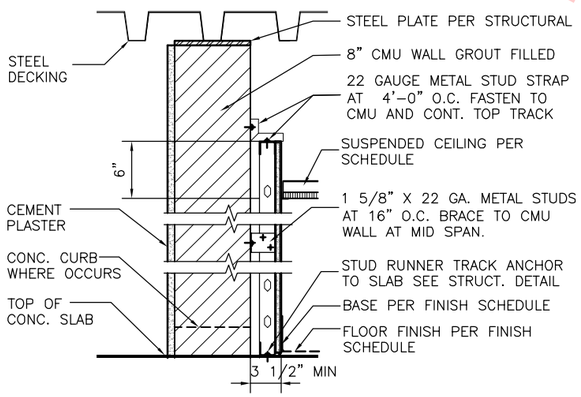

FIRE RATING: NONE
LISTING: NONE

WALL TYPE B1

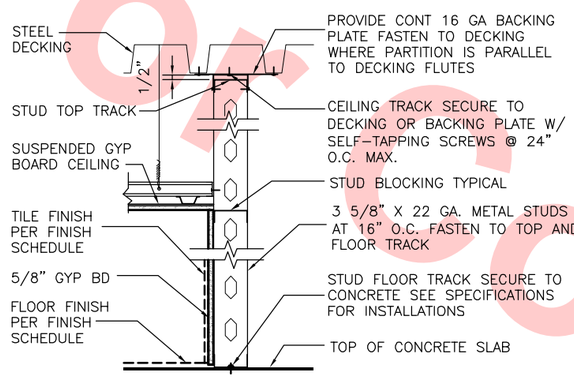

FIRE RATING: NONE
LISTING: NONE

WALL TYPE B2

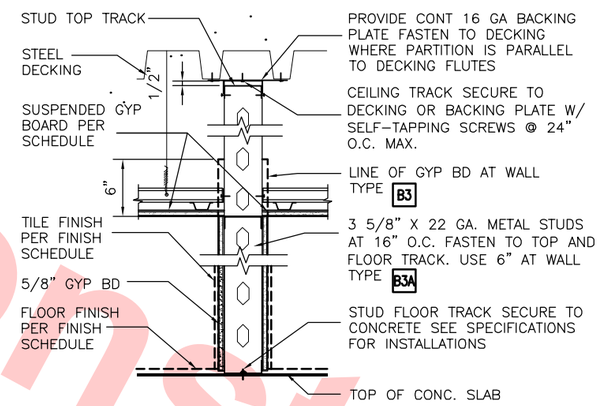

FIRE RATING: NONE
LISTING: NONE

WALL TYPE B3 B3A

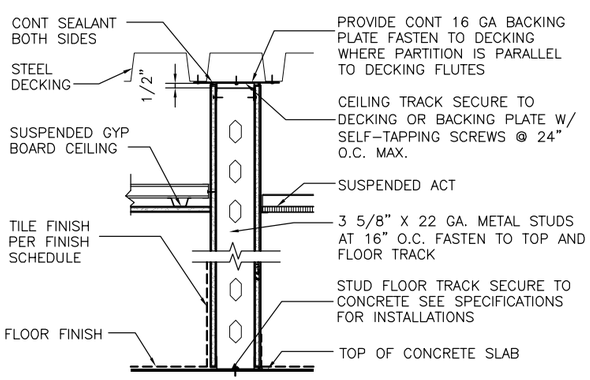

FIRE RATING: NONE
LISTING: NONE

WALL TYPE B4

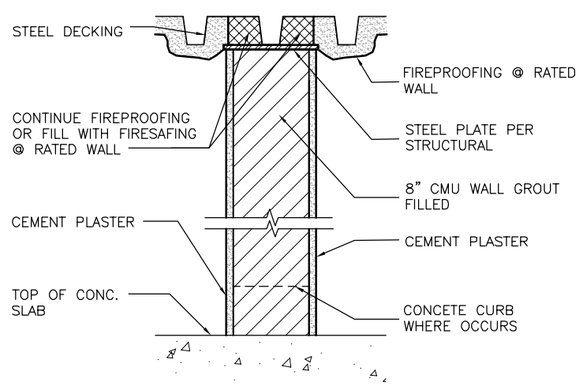

FIRE RATING: 3 HOUR AS INDICATED IN PLAN
LISTING: ITEM 3–1.3 CBC TABLE 720.1 (2)

WALL TYPE B5

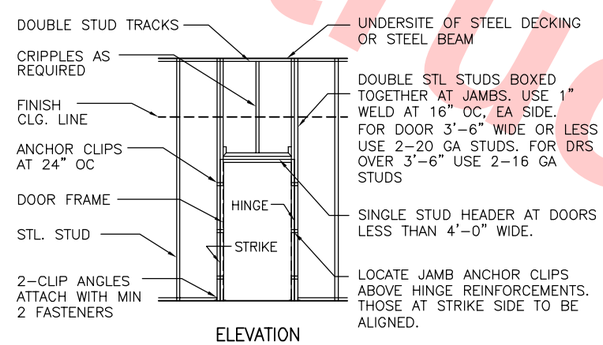

TYPICAL STUD FRAMING AT DOOR (1 / DB–A834)
NOT TO SCALE

FINISH CODE

CODE	MANUFACTURER	PRODUCT DESC	COLOR/FIN
PAINT (INTERIOR & EXTERIOR)			
P–1	BENJAMIN MOORE	SEMI–GLOSS	PLATINUM GRAY
P–2	BENJAMIN MOORE	SEMI–GLOSS	HARBOR GRAY
P–3	BENJAMIN MOORE	FLAT	WHITE
COLORED CONCRETE			
C1–1	SCOFIELD		DARK GRAY
TILE			
T–1	CROSSVILLE CROSS–COLORS	6"X6"	ANTICO TAUPE
T–2	CROSSVILLE CROSS–COLORS	6'X6"	TRUFFLE
PLASTIC LAMINATE			
PL–1	FORMICA	NATURELLE FINISH	MILLENNIUM OAK
RUBBER BASE			
RB–1	ROPPE	NO. 114 4" HIGH	LUNAR DUST P193
RESILIENT TILE FLOORING			
RTF–1	ARMSTRONG	EXCELON 12"X12"	PEAT GRAY 52150
SUSPENDED CEILINGS			
ACT	ARMSTRONG CIRRUS SQUARE	24"X48"	WHITE
EPOXY FLOOR COATING			
SEE SPECIFICATIONS SECTION 09 91 00			

FINISHES ABBREVIATIONS

ACT	ACOUSTICAL CEILING TILE
CONC	CONCRETE
CG	CEILING
CI	CONCRETE INTEGRAL COLORED
CP	CEMENT PLASTER
DWM	DECORATIVE WIRE MESH
EFC	EPOXY FLOOR COATING
EXP	EXPOSED
FIN	FINISH
FP	SPRAY ON FIRE PROOFING
GB	GYPSUM BOARD
RTF	RESILIENT TILE FLOORING
MET	METAL
P	PAINT
PLAM	PLASTIC LAMINATE
RB	RUBBER BASE
SLR	SEALER, TRANSPARENT
SS	STAINLESS STEEL
T	TILE

GENERAL NOTES

1. ALL PLASTER AND GYP. BOARD WALLS AND HARD LID AND EXPOSED CEILINGS SHALL BE PAINTED EGGSHELL FINISH UNLESS NOTED OTHERWISE.
2. ALL WALL FINISHES ARE TO CEILING WHERE OCCURS, OR TO UNDERSIDE OF METAL DECK WHEN STRUCTURE IS EXPOSED U.O.N.
3. ALL FLOOR SURFACES SHALL BE NON–SLIP. FLOOR FINISHES SHALL HAVE A COEFFICIENT OF 0.8 OR LESS.
4. TRANSITIONS BETWEEN DISSIMILAR FLOOR MATERIALS SHALL OCCUR AT CENTERLINE OF DOOR.
5. EXPOSED DUCTS SHALL BE PAINTED TO MATCH ADJACENT CEILING.
6. PROVIDE BULLNOSE TRIMS AT TOP OF 4'–0" HIGH WALL TILES.

Not For Construction

REV	DATE	BY	SUB	APP	DESCRIPTION
0	20130710				READINESS FOR CONSTRUCTION

DESIGNED BY S. DEBNATH
DRAWN BY B. ITURALDE
CHECKED BY E. LOPEZ
IN CHARGE R. BARLAAN
DATE 20130710

LICENSED ARCHITECT SOMESH DEBNATH No. C21523 STATE OF CALIFORNIA

Skanska Shimmick Herzog
1436 California Circle
Milpitas, California 95035
A Joint Venture

Anil Verma Associates, Inc. 1970 Broadway, Suite 525, Oakland, CA 94612 Phone: (510) 835-2337 Fax: (510) 835-2339
SUBMITTED

Lackwood, Andrews & Newnam, Inc. A LEO & DALY COMPANY
T·Y·LIN INTERNATIONAL
APPROVED

VTA BART SILICON VALLEY
BART SILICON VALLEY BERRYESSA EXTENSION

LINE, TRACK, STATIONS AND SYSTEMS DESIGN UNIT 023
ANCILLARY BUILDING

INTERIOR FINISH SCHEDULE, FINISH CODES AND WALL TYPES

CADD FILENAME C700–S–DB–A834.dwg
SIZE D | SCALE NOT TO SCALE
CONTRACT NO. C700 | REV. 0
AREA CODE DB | SHEET NO. A834 | PAGE NO. 0593

JosephG Jun 26, 2013 – 1:05pm G:\Current Projects\VTA–Berryessa Extension Project\Station – Milpitas\CAD\Drawings Out\13–0710 C700 Milpitas Station – RFC Submit\C700–S–DB–A834.dwg

DOOR AND HARDWARE SCHEDULE

DOOR NO.	DOOR LOCATION ROOM NAME	REFERENCE SHEET NO.	FIRE RATING	DOOR						FRAME			DETAILS			HARDWARE SET	ACCESS CONTROL SYSTEMS EQUIPMENT			NOTES	DOOR SWING
				WIDTH	HEIGHT	THICK	MAT		TYPE	TYPE	MAT	FINISH	HEAD	JAMB	SILL		CR	EL	MC		
A01A	BICYCLE STORAGE RM.	DB–A811X	–	4'–0"	7'–10"	1–3/4"	SS	–	A3	A3	SS	–	12/DB–A844	5/DB–A844	4/DB–A835	22					LHR
A01B	BICYCLE STORAGE RM.	DB–A811X	–	4'–0"	7'–10"	1–3/4"	SS	–	A3	A3	SS	–	12/DB–A844	5/DB–A844	4/DB–A835	20					RHR
A02A	CONCESSIONS	DB–A811X	–	3'–0"	7'–10"	1–3/4"	SS	–	A1	A3	SS	–	12/DB–A844	5/DB–A844	4/DB–A835	20					RHR
A02B	CONCESSIONS	DB–A811X	–	8'–0"	4'–4"	–	SS	–	B2	–	SS	–	8/DB–A847	5/DB–A847	8/DB–A847	–				NOTE 1	–
A03	BUS OPERATOR FACILITY	DB–A811X	–	3'–0"	7'–0"	1–3/4"	HM	P–1	A1	A1	HM	P–1	3/DB–A844	4/DB–A844	4/DB–A835	18	●	●	●		LH
A04	MEN	DB–A811X	–	3'–0"	7'–0"	1–3/4"	HM	P–2	A1	A1	HM	P–2	1/DB–A835	1/DB–A835	3/DB–A835	08					RHR
A05	JANITOR CLOSET	DB–A811X	–	3'–0"	7'–0"	1–3/4"	HM	P–2	A1	A1	HM	P–2	1/DB–A835	1/DB–A835	3/DB–A835	11					LHR
A06	WOMEN	DB–A811X	–	3'–0"	7'–0"	1–3/4"	HM	P–2	A1	A1	HM	P–2	1/DB–A835	1/DB–A835	3/DB–A835	08					LHR
A07A	EMERGENCY GENERATOR	DB–A811X	1.5 HR	3'–0"	7'–0"	1–3/4"	HM	P–1	A1	A1	HM	P–1	2/DB–A835	2/DB–A835	5/DB–A835	21	●	●	●		RHR
A07B	EMERGENCY GENERATOR	DB–A811X	3.0 HR	3'–0"	7'–0"	1–3/4"	HM	P–1	A1	A1	HM	P–2	2/DB–A835	2/DB–A835	–	10					LH
A07C	EMERGENCY GENERATOR	DB–A811X	–	3'–0"	7'–0"	1–3/4"	HM	P–1	A2	A2	HM	P–1	7/DB–A844	2,10/DB–A844	4/DB–A835	30	●	●	●		RHR
A08A	FUEL TANK	DB–A811X	–	11'–8"	11'–8"	–	GST	P–1	B1	–	GST	P–1	10/DB–A844	9/DB–A844	–	12				NOTE 1, 2	
A08B	FUEL TANK	DB–A811X	1.5 HR	3'–0"	7'–0"	1–3/4"	HM	P–1	A1	A1	HM	P–1	2/DB–A835	2/DB–A835	5/DB–A835	21					LHR
A09A	PG&E SUBSTATION	DB–A811X	–	4'–0"	7'–0"	1–3/4"	HM	P–1	A1	A1	HM	P–1	2/DB–A835	2/DB–A835	–	29	●	●	●		LHR
A09B	PG&E SUBSTATION	DB–A811X	–	4'–0"	7'–0"	1–3/4"	HM	P–1	A1	A1	HM	P–1	2/DB–A835	2/DB–A835	–	13	●	●	●		RHR
A10	FIR RISER/ALARM CLOSET	DB–A811X	–	3'–0"	7'–0"	1–3/4"	HM	P–1	A1	A1	HM	P–1	3/DB–A844	4/DB–A844	4/DB–A835	30					LHR

GENERAL NOTES

A. FOR DETAILED DESCRIPTION OF HARDWARE SETS REFER TO SPECIFICATIONS SECTION 08 71 00

B. SEE COMMUNICATIONS DRAWINGS AND SPECIFICATIONS SECTION 28 10 01 FOR DETAILED DESCRIPTION OF ACCESS CONTROL SYSTEMS EQUIPMENTS. QUANTITIES SHALL BE AS INDICATED IN COMMUNICATIONS DRAWINGS, WHERE DISCREPANCIES OCCUR WITH ARCHITECTURAL DRAWINGS, COMMUNICATIONS DRAWINGS SHALL PREVAIL.

C. WALL STOPS SHALL BE BOLTED TO METAL STUDS OR A 14 GA X 4" MIN WIDE MOUNTING PLATE FASTENED BETWEEN METAL STUDS.

D. METAL DOORS WITH VISION GLASS SHALL BE 1/4" THICK CLEAR TEMPERED GLASS SECURED WITH METAL GLAZING MOLDING WITH SECURITY FASTENERS.

E. COORDINATE DOOR SWINGS WITH FLOOR PLANS. WHERE DISCREPANCIES EXIST, DOOR SWINGS SHOWN ON PLANS SHALL PREVAIL.

F. PROVIDE DOOR HARDWARE SPECIFIED WITH THE APPROPRIATE HANDING OF DOOR SWING.

SCHEDULE NOTES

1. HARDWARE BY DOOR MANUFACTURER. SEE PRODUCT SPECIFICATIONS
2. DOOR AND FRAME SHALL BE FACTORY FINISH KYNAR 500, COLOR TO MATCH COMPOSITE WALL PANEL.

ABBREVIATIONS

CR	CARD READER
EL	ELECTRIC LOCK
H	HEIGHT
HM	HOLLOW METAL
HW	HARDWARE
LH	LEFT HAND
LHR	LEFT HAND REVERSE
MAT	MATERIAL
MC	MAGNETIC CONTACT
P–1	PAINT FINISH COLOR 1 (TO MATCH COMPOSITE WALL PANEL)
P–2	PAINT FINISH COLOR 2
GST	GALVANIZED STEEL
RH	RIGHT HAND
RHA	RIGHT HAND ACTIVE
RHR	RIGHT HAND REVERSE
RHRA	RIGHT HAND REVERSE ACTIVE
SS	STAINLESS STEEL
STL	STEEL
T	THICKNESS
W	WIDTH

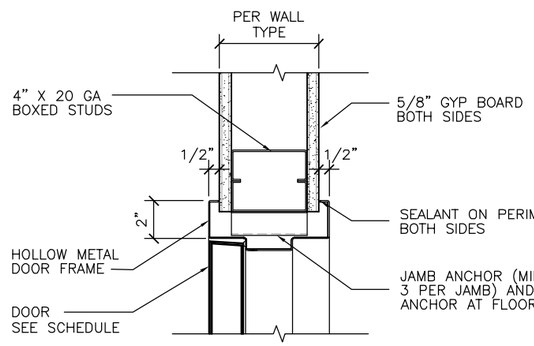

JAMB DETAIL (HEAD SIM.) 1 DB–A835
SCALE: 3" = 1'–0"

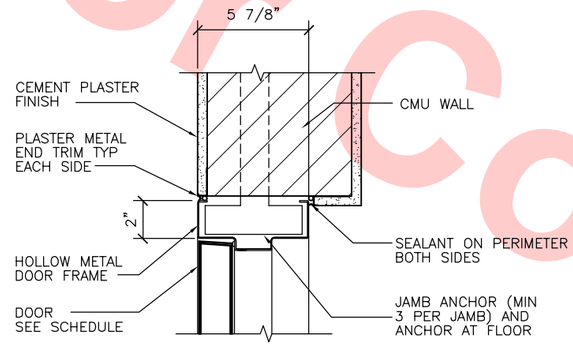

JAMB DETAIL (HEAD SIM.) 2 DB–A835
SCALE: 3" = 1'–0"

DOOR AND FRAME TYPES

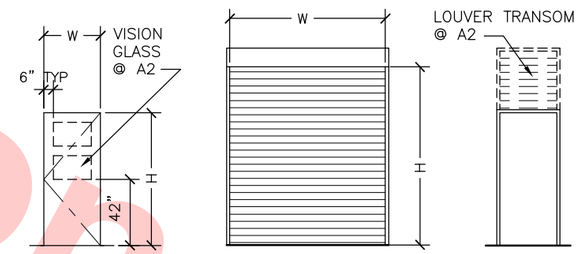

A1 – FLUSH DOOR
A2– FLUSH DOOR WITH 28"X72" LOUVERS
A3– FLUSH DOOR WITH VISION GLASS

B1 – COILING DOOR WITH SOLID SLATS
B2– COILING COUNTER DOOR

A1 – HOLLOW METAL FRAME
A2 – HM FRAME WITH LOUVERS
A3 – STAINLESS STL FRAME

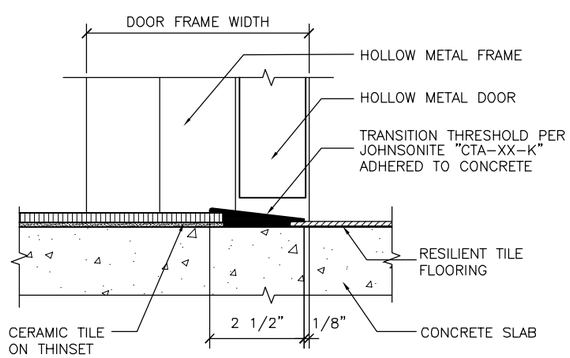

FLOOR FINISH TRANSITION DETAIL 3 DB–A835
SCALE: 6" = 1'–0"

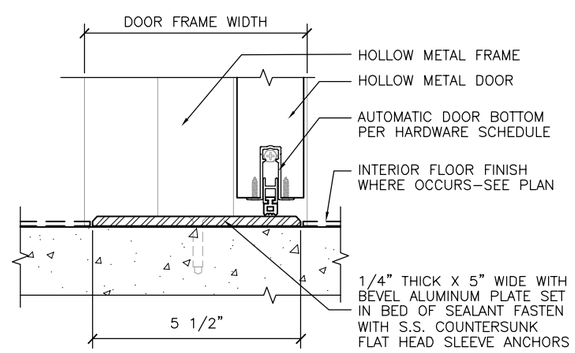

THRESHOLD/DOOR BOTTOM DETAIL 4 DB–A835
SCALE: 6" = 1'–0"

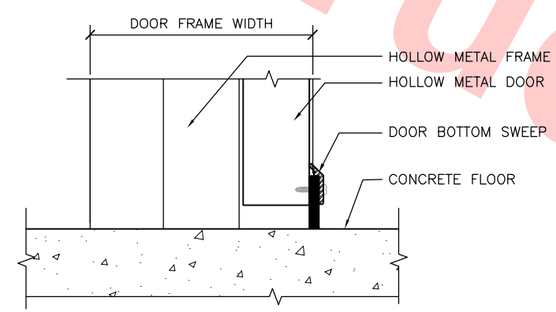

DOOR BOTTOM DETAIL 5 DB–A835
SCALE: 6" = 1'–0"

Santa Clara Valley Transportation Authority

____NO EXCEPTIONS TAKEN (NET)
____MAKE CORRECTIONS NOTED (MCN)
____AMEND AND RESUBMIT (A/R)

Any action shown above is subject to the terms of the contract and does not relieve the Contractor of any of its obligations under the contract, including design and detailing.

Contract No.: DB11002F

By: _____ Date: _____

For Construction

REV	DATE	BY	SUB	APP	DESCRIPTION
0	20130710				READINESS FOR CONSTRUCTION

DESIGNED BY S. DEBNATH
DRAWN BY B. ITURALDE
CHECKED BY E. LOPEZ
IN CHARGE R. BARLAAN
DATE 20130710

LICENSED ARCHITECT SOMESH DEBNATH No. C21523 STATE OF CALIFORNIA

Skanska Shimmick Herzog
1436 California Circle Milpitas, California 95035
A Joint Venture

Anil Verma Associates, Inc. 1970 Broadway, Suite 535 Oakland, CA 94612 Phone: (510) 835-2532 Fax: (510) 835-2339
SUBMITTED

Lockwood, Andrews & Newnam, Inc. A LEO A DALY COMPANY
T·Y·LIN INTERNATIONAL
APPROVED

VTA BART SILICON VALLEY
BART SILICON VALLEY BERRYESSA EXTENSION

LINE, TRACK, STATIONS AND SYSTEMS DESIGN UNIT 023
ANCILLARY BUILDING
DOORS AND HARDWARE SCHEDULE AND DETAILS

CADD FILENAME C700–S–DB–A835.dwg
SIZE D | SCALE AS NOTED
CONTRACT NO. C700 | REV. 0
AREA CODE DB | SHEET NO. A835 | PAGE NO. 0594

JosephG Jun 26, 2013 – 1:05pm G:\Current Projects\VTA–Berryessa Extension Project\Station – Milpitas\CAD\Drawings Out\13–0710 C700 Milpitas Station – RFC Submit\C700–S–DB–A835.dwg

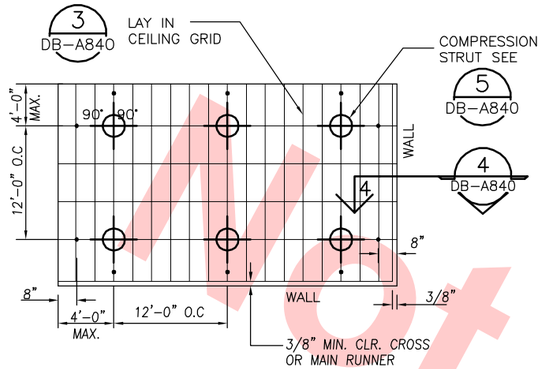

TYP. LAY IN CEILING PLAN (1 / DB–A840)

NOT TO SCALE

DB–A813X

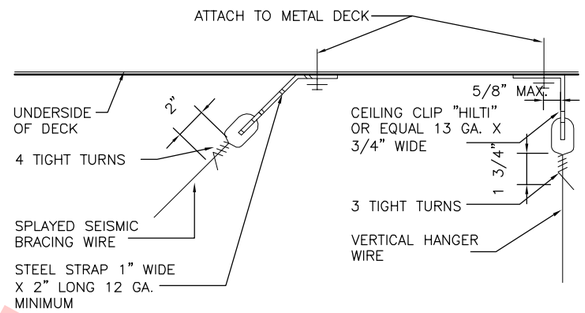

WIRE TO DECK ATTACHMENTS (2 / DB–A840)

SCALE: 3" = 1'–0"

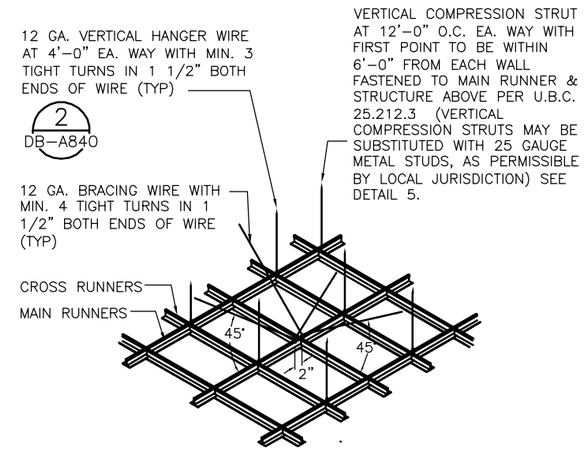

TYPICAL LAY IN CEILING GRID (3 / DB–A840)

NOT TO SCALE

COMPRESSION PIPE STRUT SIZE SCHEDULE (BASED ON L/R > 200)	
SIZE	MAX. HEIGHT
1/2" x 22 GA.	3'–0"
3/4" x 22 GA	4'–0"
1" x 20 GA	6'–0"
1 1/4" x 20 GA	7'–0"
1 1/2" x 20 GA	8'–6"
2" x 20 GA	11'–6"
2 1/2" x 18 GA	14'–6"
3" x 18 GA	17'–3"
3 1/2" x 16 GA	23'–3"

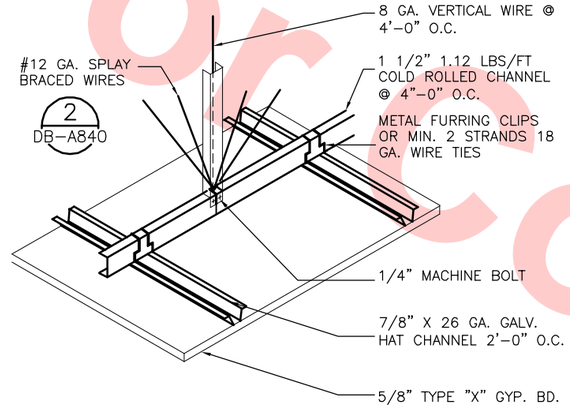

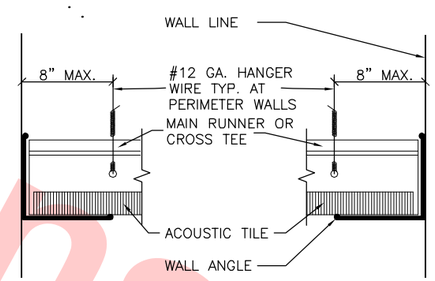

ACOUSTIC TILE DETAIL (4 / DB–A840)

SCALE: 3" = 1'–0"

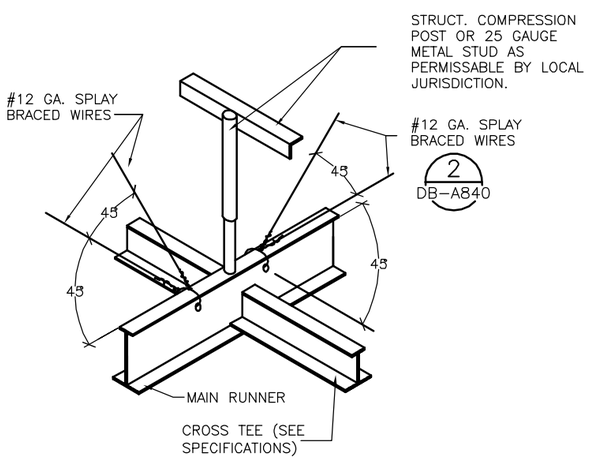

TYP. COMPRESSION PIPE STRUT (5 / DB–A840)

NOT TO SCALE

NOTES:

1. LATERAL SUPPORT SHALL BE PROVIDED BY (4) WIRES (12 GA. MIN.) SPLAYED IN FOUR DIRECTIONS 90° APART. CONNECT TO MAIN RUNNER @ 2" MAX. FROM CROSS–RUNNER AND TO STRUCTURE ABOVE AT AN ANGLE NOT EXCEEDING 45° FROM PLANE OF CEILING. INSTALL LATERAL SUPPORTS @ 12'–0" INTERVALS EA. DIRECTION W/FIRST POINT @ 6'–0" MAX. FROM EA. WALL.
2. VERTICAL SUPPORT SHALL BE PROVIDED AS REQUIRED IN CHAPTER 47 UNIFORM BUILDING CODE, WITH THE ADDED REQUIREMENT THAT DISCONTINUOUS ENDS OF CROSS–RUNNERS AND MAIN RUNNERS SHALL BE VERTICALLY SUPPORTED @ 8" MAX. FROM SUCH DISCONTINUITIES WHICH OCCUR WHERE CEILING IS DISRUPTED BY A WALL.
3. PROVIDE 1 1/8" X 1 1/2" X 20 GA. ANGLE AT END OF EACH CHANNEL TO VERTICAL WALL STUDS.

TYPICAL GYP. BD CEILING (6 / DB–A840)

NOT TO SCALE

DB–A813X

GENERAL NOTES

1. 12 GA. (MIN) HANGER WIRES MAY BE USED FOR UP TO AND INCLUDING 4'–0" x 4'–0" GRID SPACING ALONG MAIN RUNNERS. SPLICES WILL NOT BE PERMITTED IN HANGER WIRES.
2. PROVIDE 12 GA. HANGER WIRES AT THE ENDS OF ALL MAIN & CROSS RUNNERS WITHIN 8" OF THE SUPPORT OR WITHIN 1/4" OF THE LENGTH OF THE END TEE, WHICHEVER IS LEAST, FOR THE PERIMETER OF THE CEILING AREA.
3. PROVIDE TRAPEZE OR OTHER SUPPLEMENTARY SUPPORT MEMBERS AT OBSTRUCTIONS TO MAIN HANGER SPACING. PROVIDE ADDITIONAL HANGERS, STRUTS OR BRACES AS REQUIRED AT ALL CEILING BREAKS, SOFFITS, OR DISCONTINUOUS AREAS. HANGER WIRES THAT ARE MORE THAN 1 IN 6 OUT OF PLUMB ARE TO HAVE COUNTER SLOPING WIRES.
4. AT THE PERIMETER OF THE CEILING AREA WHERE MAIN OR CROSS RUNNERS ARE NOT TO THE ADJACENT WALL, PROVIDE INTERCONNECTION BETWEEN THE RUNNERS AT THE FREE END TO PREVENT LATERAL SPREADING. A METAL STRUT OR 16 GA. WIRE WITH A POSITIVE MECHANICAL CONNECTOR TO THE RUNNER MAY BE USED. WHERE THE PERPENDICULAR DISTANCE FROM THE WALL TO THE FIRST PARALLEL RUNNER IS 12" OR LESS, THIS INTERLOCK IS NOT REQUIRED.
5. CEILING GRID MEMBERS MAY BE ATTACHED TO NOT MORE THAN 2 ADJACENT WALLS CEILING GRID MEMBERS SHOULD BE AT LEAST 1/2" FREE OF OTHER WALLS.
6. PROVIDE SETS OF 4–12 GA. SPLAYED BRACING WIRES ORIENTED 90 DEGREES FROM EACH OTHER AT NOT MORE THAN 8' x 12' O.C. PROVIDE BRACING WIRES AT LOCATIONS NOT MORE THAN 1/2 THE SPACING GIVEN ABOVE (4' & 6') FROM EACH PERIMETER WALL AND AT THE EDGE OF VERTICAL CEILING SOFFITS. THE SLOPE OF THESE WIRES SHOULD NOT EXCEED 45 DEGREES FROM THE PLANE OF THE CEILING AND SHOULD BE TAUT WITHOUT CAUSING THE CEILING TO UPLIFT. A STRUT FASTENED TO THE MAIN RUNNER AT EACH OF THE SPLAYED BRACING WIRE CONVERGENCE POINTS SHALL BE EXTENDED TO AND FASTENED TO THE FLOOR OR ROOF STRUCTURE ABOVE.
7. FASTEN HANGER WIRES WITH NOT LESS THAN 3 TIGHT TURNS. FASTEN BRACING WIRES WITH 4 TIGHT TURNS. MAKE ALL TIGHT TURNS WITHIN A DISTANCE OF 1–1/2 INCHES.
8. SEPARATE ALL CEILING HANGING AND BRACING WIRES AT LEAST 6 INCHES FROM ALL UNBRACED PIPES, DUCTS, PIPES, CONDUITS, ETC. IT IS ACCEPTABLE TO ATTACH LIGHTWEIGHT ITEMS, SUCH AS SINGLE ELECTRICAL CONDUIT NOT EXCEEDING 3/4" NOMINAL TO HANGER WIRES USING CONNECTORS ACCEPTABLE TO OSHPD.
9. ATTACH ALL LIGHT FIXTURES TO THE CEILING GRID RUNNERS TO RESIST A HORIZONTAL FORCE EQUAL TO THE WEIGHT OF THE FIXTURES.
10. FLUSH OR RECESSED LIGHT FIXTURES AND AIR TERMINALS OR SERVICES WEIGHING LESS THAN 56 LBS. MAY BE SUPPORTED DIRECTLY ON THE RUNNER OF A HEAVY DUTY GRID SYSTEM BUT, IN ADDITION, THEY MUST HAVE A MIN. OF 2–12 GA. SLACK SAFETY WIRES ATTACHED TO THE FIXTURE AT DIAGONAL CORNERS AND ANCHORED TO THE STRUCTURE ABOVE. ALL 4' x 4' LIGHT FIXTURES MUST HAVE SLACK SAFETY WIRES AT EACH CORNER. ALL FLUSH OR RECESSED LIGHT FIXTURES AND AIR TERMINALS OR SERVICES WEIGHING 56 LBS. OR MORE MUST BE INDEPENDANTLY SUPPORTED BY NOT LESS THAN 4 TAUT 12 GA. WIRES EACH ATTACHED TO THE FIXTURE AND TO THE STRUCTURE ABOVE REGARDLESS OF THE TYPE OF CEILING GRID SYSTEM USED. THE 4 TAUT 12 GA. WIRES INCLUDING THEIR ATTACHMENT TO THE STRUCTURE ABOVE MUST BE CAPABLE OF SUPPORTING 4 TIMES THE THE WEIGHT OF THE UNIT.
11. ALL FIXTURES AND AIR TERMINALS OR SERVICES SUPPORTED ON INTERMEDIATE DUTY GRID SYSTEMS MUST BE INDEPENDENTLY SUPPORTED BY NOT LESS THAN 4 TAUT 12 GA. WIRES EACH ATTACHED TO THE FIXTURE OR TERMINAL AND TO THE STRUCTURE ABOVE.
12. SUPPORT SURFACE MOUNTED LIGHT FIXTURES BY AT LEAST TWO POSITIVE DEVICES WHICH SURROUND THE CEILING RUNNER AND WHICH ARE EACH SUPPORTED FROM THE STRUCTURE ABOVE BY 12 GA. WIRE. SPRING CLIPS OR CLAMPS THAT CONNECT ONLY TO THE RUNNER ARE NOT ACCEPTABLE. PROVIDE ADDITIONAL SUPPORT WHEN LIGHT FIXTURES ARE 8 FEET OR LONGER.

Santa Clara Valley Transportation Authority

____NO EXCEPTIONS TAKEN (NET)
____MAKE CORRECTIONS NOTED (MCN)
____AMEND AND RESUBMIT (A/R)

Any action shown above is subject to the terms of the contract and does not relieve the Contractor of any of its obligations under the contract, including design and detailing.

Contract No.: DB11002F

By: _____ **Date:** _____

Not For Construction

REV	DATE	BY	SUB	APP	DESCRIPTION
0	20130710				READINESS FOR CONSTRUCTION

DESIGNED BY S. DEBNATH
DRAWN BY G. LEVASHOV
CHECKED BY E. LOPEZ
IN CHARGE R. BARLAAN
DATE 20130710

LICENSED ARCHITECT SOMESH DEBNATH No. C21523 STATE OF CALIFORNIA

Skanska Shimmick Herzog
1436 California Circle
Milpitas, California 95035
A Joint Venture

Anil Verma Associates, Inc.
1970 Broadway, Suite 535 Oakland, CA 94612
Phone: (510) 835-2537 Fax: (510) 835-2339
SUBMITTED

Lockwood, Andrews & Newnam, Inc. | T·Y·LIN INTERNATIONAL
APPROVED

VTA BART SILICON VALLEY
BART SILICON VALLEY BERRYESSA EXTENSION

LINE, TRACK, STATIONS AND SYSTEMS
DESIGN UNIT 023
ANCILLARY BUILDING

CEILING DETAILS

CADD FILENAME C700–S–DB–A840.dwg
SIZE D | SCALE AS NOTED
CONTRACT NO. C700 | REV. 0
AREA CODE DB | SHEET NO. A840 | PAGE NO. 0595

JosephG Jun 26, 2013 – 1:05pm G:\Current Projects\VTA–Berryessa Extension Project\Station – Milpitas\CAD\Drawings Out\13–0710 C700 Milpitas Station – RFC Submit\C700–S–DB–A840.dwg

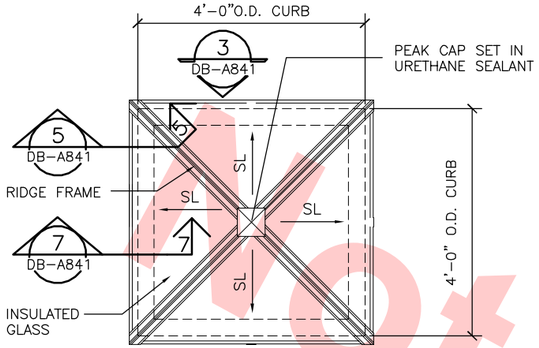

SKYLIGHT NO. 1 PLAN

SCALE: 3/4" = 1'-0"

1 DB-A841 DB-A812X

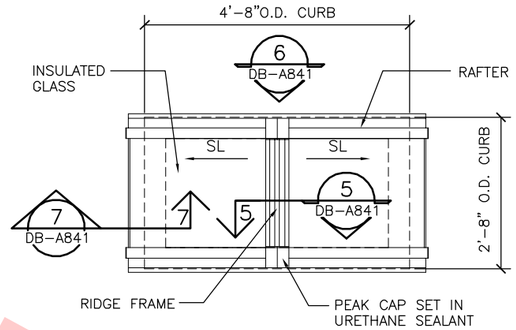

SKYLIGHT NO. 2 PLAN

SCALE: 3/4" = 1'-0"

2 DB-A841 DB-A812X

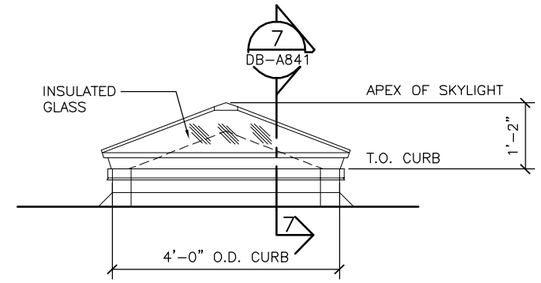

SKYLIGHT NO. 1 ELEVATION

SCALE: 3/4" = 1'-0"

3 DB-A841 DB-A841

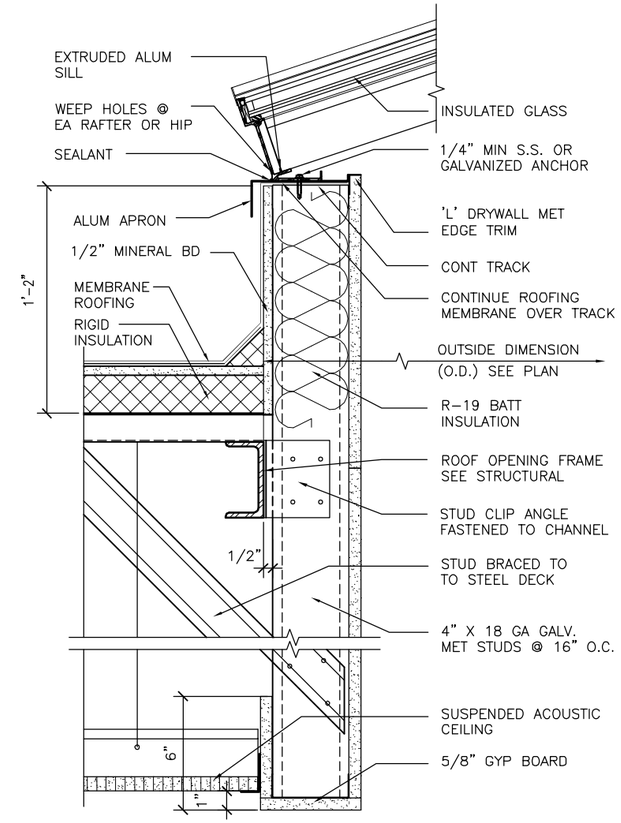

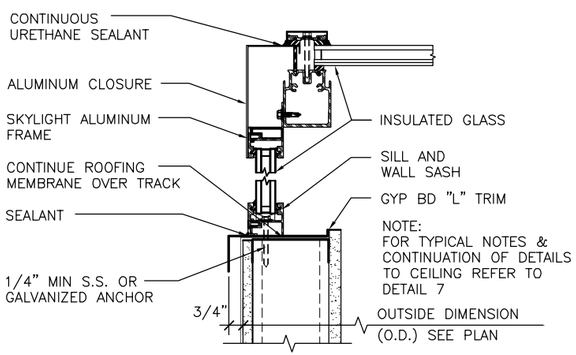

SKYLIGHT GABLE DETAIL

SCALE: 3" = 1'-0"

4 DB-A841 DB-A841

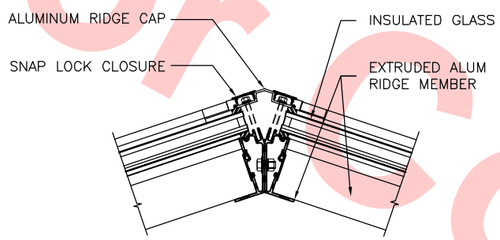

SKYLIGHT HIP DETAIL

SCALE: 3" = 1'-0"

5 DB-A841 DB-A841

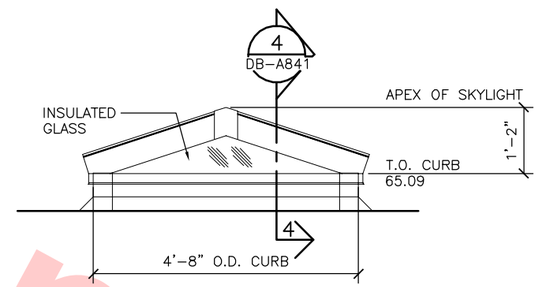

SKYLIGHT NO. 2 ELEVATION

SCALE: 3/4" = 1'-0"

6 DB-A841 DB-A841

SKYLIGHT SILL/CURB DETAIL

SCALE: 3" = 1'-0"

7 DB-A841 DB-A841

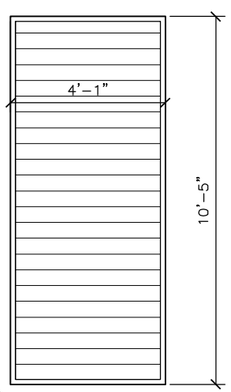

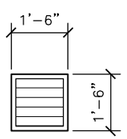

L1 6" DEEP DRAINABLE WITH 59% FREE AIR

L2 4" DEEP DRAINABLE WITH 50% FREE AIR

LOUVER SCHEDULE

SCALE: 1/2" = 1'-0"

8 DB-A841 DB-A811X

Santa Clara Valley Transportation Authority

____NO EXCEPTIONS TAKEN (NET)
____MAKE CORRECTIONS NOTED (MCN)
____AMEND AND RESUBMIT (A/R)

Any action shown above is subject to the terms of the contract and does not relieve the Contractor of any of its obligations under the contract, including design and detailing.

Contract No.: DB11002F

By: _____ Date: _____

Not For Construction

REV	DATE	BY	SUB	APP	DESCRIPTION
0	20130710				READINESS FOR CONSTRUCTION

DESIGNED BY S. DEBNATH
DRAWN BY B. ITURALDE
CHECKED BY E. LOPEZ
IN CHARGE R. BARLAAN
DATE 20130710

LICENSED ARCHITECT SOMESH DEBNATH No. C21523 STATE OF CALIFORNIA

Skanska Shimmick Herzog
1436 California Circle
Milpitas, California 95035
A Joint Venture

Anil Verma Associates, Inc.
1970 Broadway, Suite 325 Oakland, CA 94612
Phone: (510) 835-2537 Fax: (510) 835-2339

Lockwood, Andrews & Newnam, Inc. A LEO A DALY COMPANY
T·Y·LIN INTERNATIONAL

SUBMITTED _____
APPROVED _____

VTA BART SILICON VALLEY
BART SILICON VALLEY BERRYESSA EXTENSION

LINE, TRACK, STATIONS AND SYSTEMS DESIGN UNIT 023
ANCILLARY BUILDING

SKYLIGHT AND ROOF DETAILS

CADD FILENAME C700-S-DB-A841.dwg
SIZE D | SCALE AS NOTED
CONTRACT NO. C700 | REV. 0
AREA CODE DB | SHEET NO. A841 | PAGE NO. 0596

JosephG Jun 26, 2013 - 1:05pm C:\Current Projects\VTA-Berryessa Extension Project\Station - Milpitas\CAD\Drawings Out\13-0710 C700 Milpitas Station - RFC Submit\C700-S-DB-A841.dwg

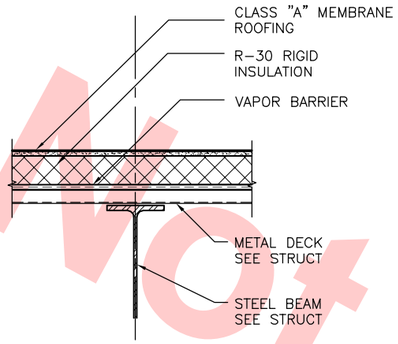

TYPICAL MEMBRANE ROOFING (1)

SCALE: 1 1/2" = 1'-0"

DB-A842 / DB-A812X

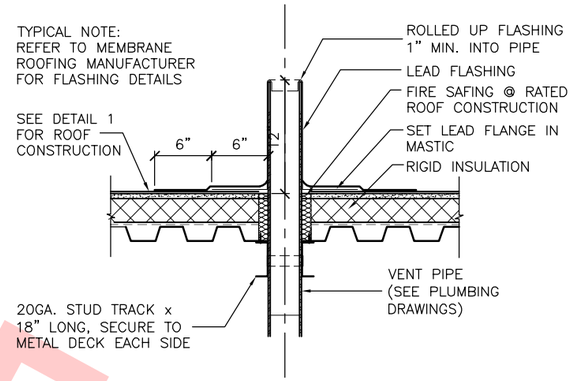

VENT/PIPE FLASHING (2)

SCALE: 1 1/2" = 1'-0"

DB-A842 / DB-A812X

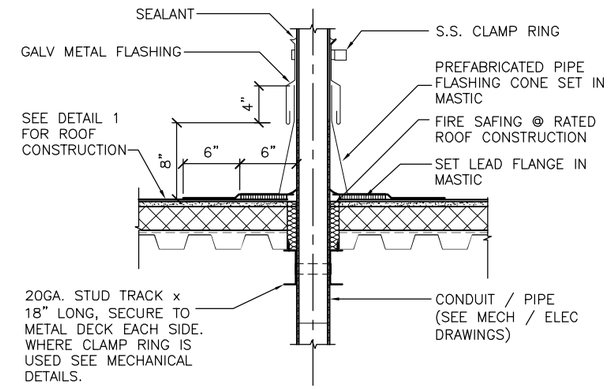

VENT/PIPE FLASHING (3)

SCALE: 1 1/2" = 1'-0"

DB-A842 / DB-A812X

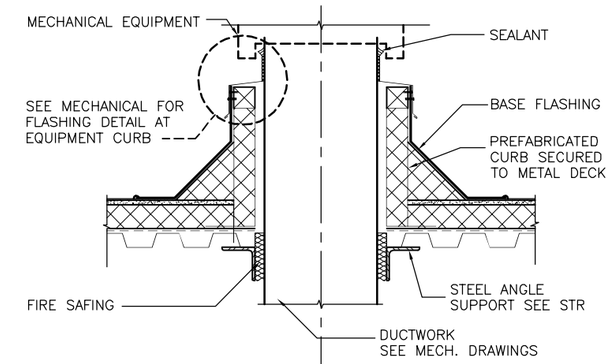

MECH DUCT PENETRATION CURB (4)

SCALE: 1 1/2" = 1'-0"

DB-A842 / DB-A812X

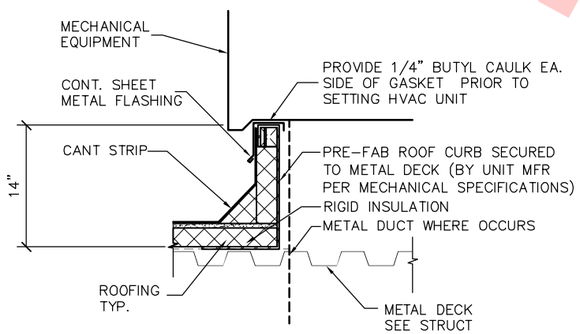

ROOF EQUIPMENT CURB (5)

SCALE: 1 1/2" = 1'-0"

DB-A842 / DB-A812X

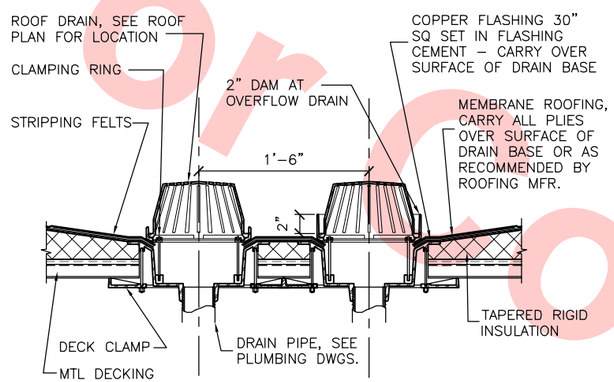

ROOF DRAIN/OVERFLOW (6)

SCALE: 1 1/2" = 1'-0"

DB-A842 / DB-A812X

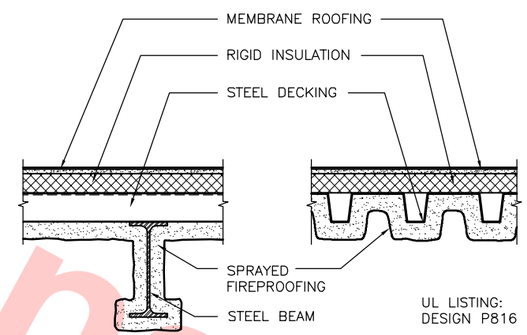

3-HOUR FIREPROOFING (7)

SCALE: 1 1/2" = 1'-0"

DB-A842 / DB-A813X

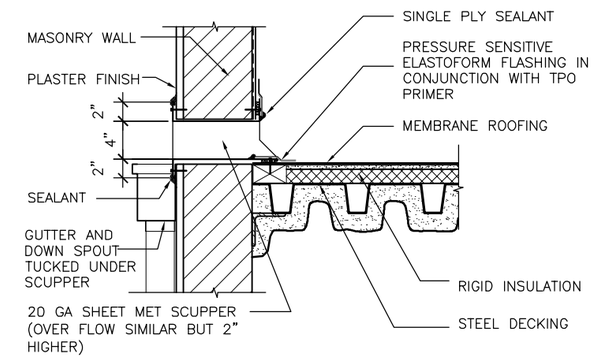

SCUPPER DETAIL (8)

SCALE: 1 1/2" = 1'-0"

DB-A842 / DB-A813X

Santa Clara Valley Transportation Authority

____NO EXCEPTIONS TAKEN (NET)
____MAKE CORRECTIONS NOTED (MCN)
____AMEND AND RESUBMIT (A/R)

Any action shown above is subject to the terms of the contract and does not relieve the Contractor of any of its obligations under the contract, including design and detailing.

Contract No.: DB11002F

By: _____ Date: _____

Not For Construction

REV	DATE	BY	SUB	APP	DESCRIPTION
0	20130710				READINESS FOR CONSTRUCTION

DESIGNED BY S. DEBNATH
DRAWN BY G. LEVASHOV
CHECKED BY E. LOPEZ
IN CHARGE R. BARLAAN
DATE 20130710

LICENSED ARCHITECT RAMESH DEBNATH No. C21523 STATE OF CALIFORNIA

Skanska Shimmick Herzog
1436 California Circle
Milpitas, California 95035
A Joint Venture

Anil Verma Associates, Inc.
1970 Broadway, Suite 525, Oakland, CA 94612
Phone: (510) 835-2537 Fax: (510) 535-2339

Lockwood, Andrews & Newnam, Inc. — A LNA & RALY COMPANY
T·Y·LIN INTERNATIONAL

SUBMITTED _____ APPROVED _____

VTA BART SILICON VALLEY
BART SILICON VALLEY BERRYESSA EXTENSION

LINE, TRACK, STATIONS AND SYSTEMS
DESIGN UNIT 023
ANCILLARY BUILDING

ROOF DETAILS

CADD FILENAME C700-S-DB-A842.dwg
SIZE D | SCALE 1 1/2"=1'-0"
CONTRACT NO. C700 | REV. 0
AREA CODE DB | SHEET NO. A842 | PAGE NO. 0597

JosephG Jun 26, 2013 - 1:06pm G:\Current Projects\VTA-Berryessa Extension Project\Station - Milpitas\CAD\Drawings Out\13-0710 C700 Milpitas Station - RFC Submit\C700-S-DB-A842.dwg

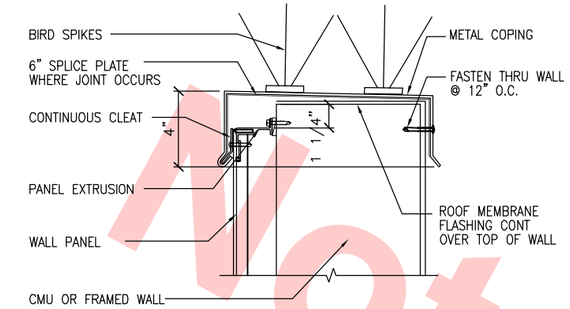

COPING DETAIL (1)
SCALE: 3" = 1'-0"
DB-A843
DB-A831
DB-A832
DB-A833

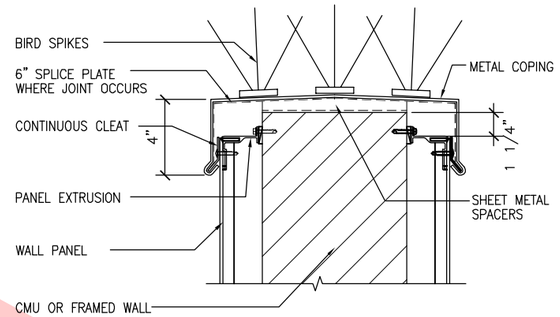

COPING DETAIL (2)
SCALE: 3" = 1'-0"
DB-A843
DB-A831
DB-A832

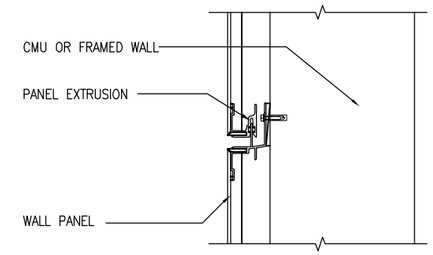

TYPICAL JOINT DETAIL (3)
SCALE: 3" = 1'-0"
DB-A843
DB-A831

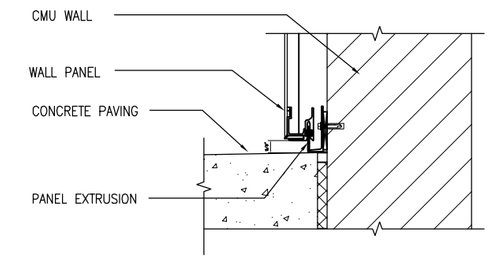

SILL DETAIL (4)
SCALE: 3" = 1'-0"
DB-A843
DB-A831

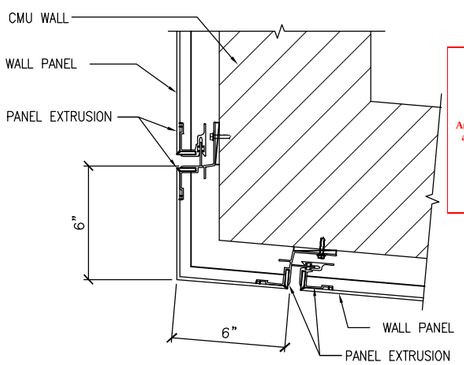

DETAILED PLAN (5)
SCALE: 3" = 1'-0"
DB-A843
DB-A811X

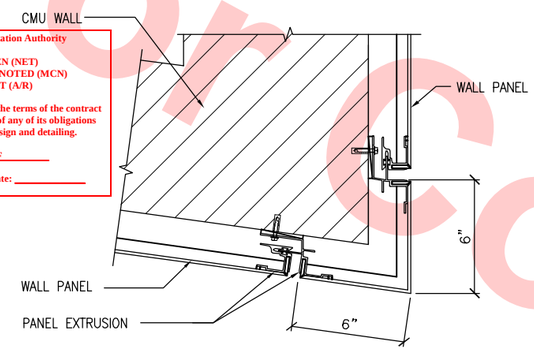

DETAILED PLAN (6)
SCALE: 3" = 1'-0"
DB-A843
DB-A826

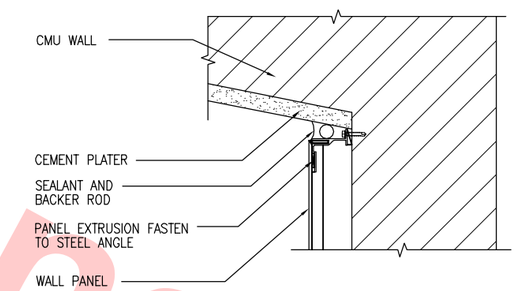

DETAILED PLAN (7)
SCALE: 3" = 1'-0"
DB-A843
DB-A825

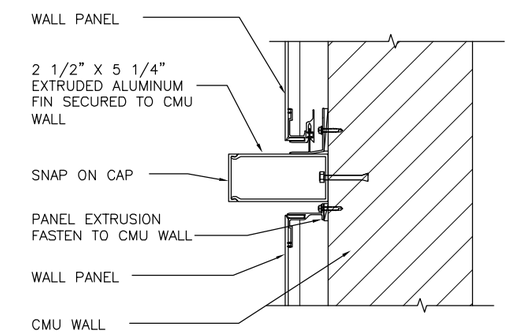

DETAILED SECTION (8)
SCALE: 3" = 1'-0"
DB-A843
DB-A833

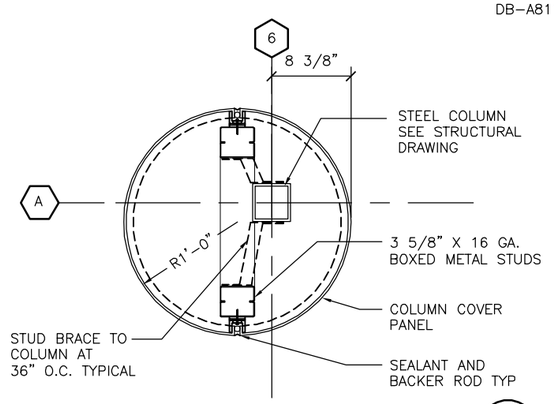

COLUMN DETAILED PLAN (9)
SCALE: 1 1/2" = 1'-0"
DB-A843
DB-A826
DB-A845

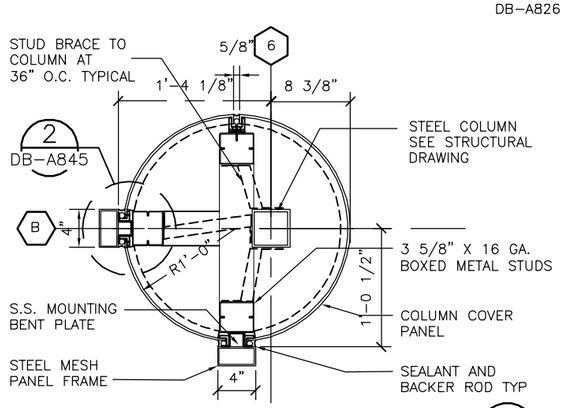

COLUMN DETAILED PLAN (10)
SCALE: 1 1/2" = 1'-0"
DB-A843
DB-A826
DB-A845

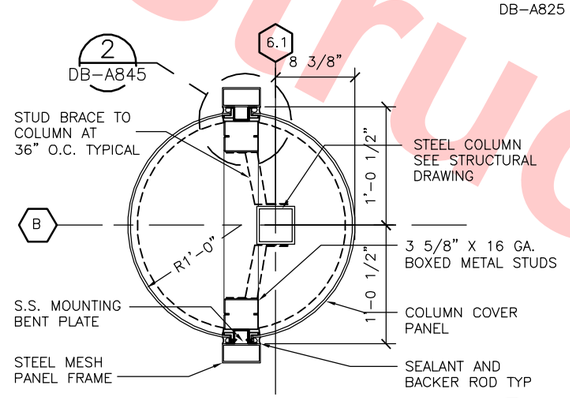

COLUMN DETAILED PLAN (11)
SCALE: 1 1/2" = 1'-0"
DB-A843
DB-A826
DB-A845

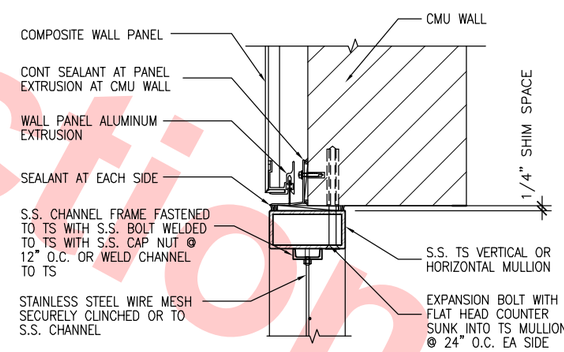

HORIZONTAL/VERTICAL MULLION (12)
SCALE: 3" = 1'-0"
DB-A843
DB-A845

Santa Clara Valley Transportation Authority

____NO EXCEPTIONS TAKEN (NET)
____MAKE CORRECTIONS NOTED (MCN)
____AMEND AND RESUBMIT (A/R)

Any action shown above is subject to the terms of the contract and does not relieve the Contractor of any of its obligations under the contract, including design and detailing.

Contract No.: DB11002F

By: _____ Date: _____

Not For Construction

REV	DATE	BY	SUB	APP	DESCRIPTION
0	20130710				READINESS FOR CONSTRUCTION

DESIGNED BY S. DEBNATH
DRAWN BY B. TURALDE
CHECKED BY E. LOPEZ
IN CHARGE R. BARLAAN
DATE 20130710

LICENSED ARCHITECT SOMESH DEBNATH No. C21523 STATE OF CALIFORNIA

Skanska Shimmick Herzog
1436 California Circle
Milpitas, California 95035
A Joint Venture

Anil Verma Associates, Inc.
1970 Broadway, Suite 525, Oakland, CA 94612
Phone: (510) 835-2532 Fax: (510) 835-2339
SUBMITTED

Lockwood, Andrews & Newnam, Inc. A LEO A DALY COMPANY
T·Y·LIN INTERNATIONAL
APPROVED

VTA BART SILICON VALLEY
BART SILICON VALLEY BERRYESSA EXTENSION

LINE, TRACK, STATIONS AND SYSTEMS
DESIGN UNIT 023
ANCILLARY BUILDING

EXTERIOR WALL DETAILS
SHEET 1 OF 2

CADD FILENAME C700-S-DB-A843.dwg
SIZE D | SCALE AS NOTED
CONTRACT NO. C700 | REV. 0
AREA CODE DB | SHEET NO. A843 | PAGE NO. 0598

JosephC Jun 26, 2013 - 1:06pm G:\Current Projects\VTA-Berryessa Extension Project\Station - Milpitas\CAD\Drawings Out\13-0710 C700 Milpitas Station - RFC Submit\C700-S-DB-A843.dwg

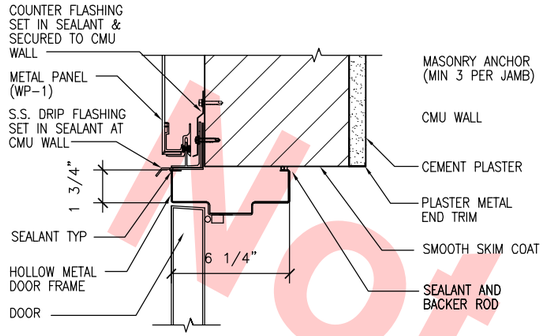

HEAD DETAIL (1) DB-A844 DB-A835
SCALE: 3" = 1'-0"

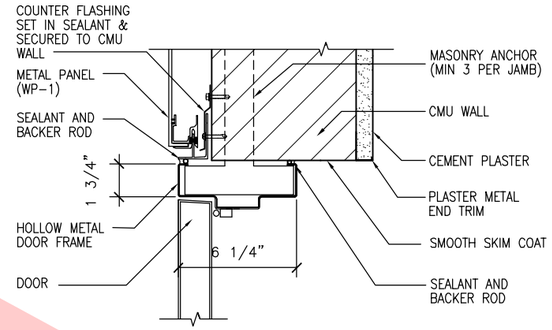

JAMB DETAIL (2) DB-A844 DB-A835
SCALE: 3" = 1'-0"

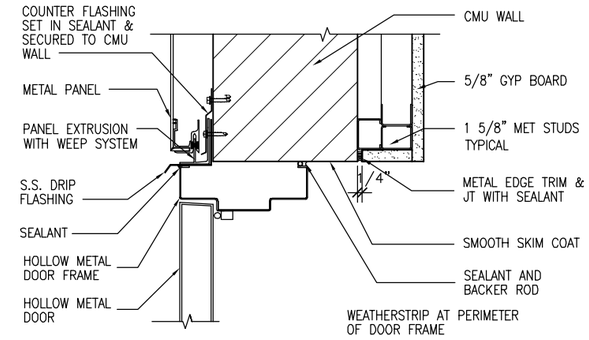

HEAD DETAIL (3) DB-A844 DB-A835
SCALE: 3" = 1'-0"

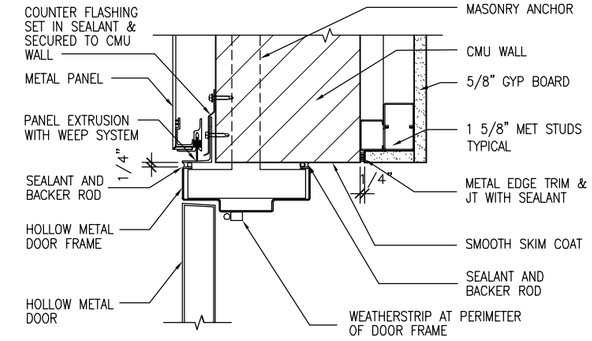

JAMB DETAIL (4) DB-A844 DB-A835
SCALE: 3" = 1'-0"

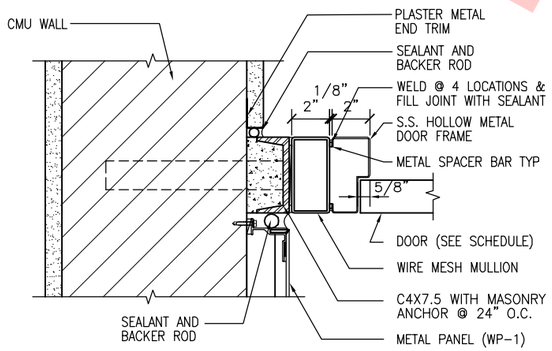

DETAILED PLAN (5) DB-A844 DB-A835 DB-A845
SCALE: 3" = 1'-0"

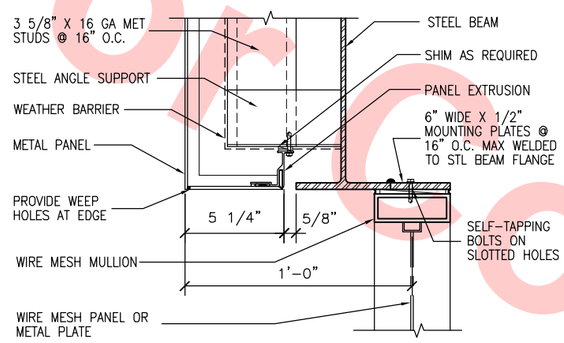

SOFFIT DETAIL (6) DB-A844 DB-A832 DB-A845
SCALE: 3" = 1'-0"

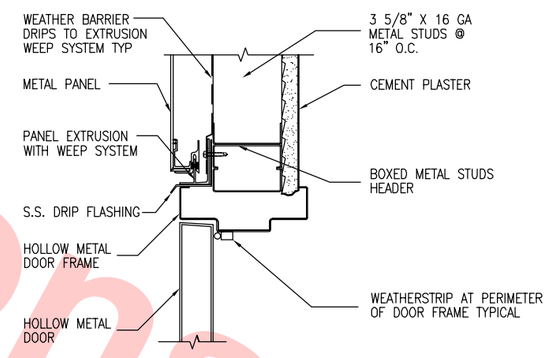

HEAD DETAIL (7) DB-A844 DB-A835
SCALE: 3" = 1'-0"

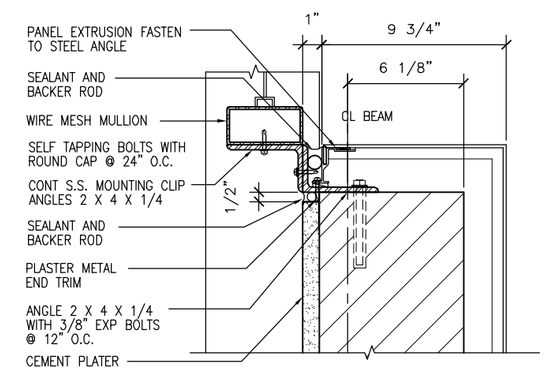

DETAILED PLAN (8) DB-A844 DB-A835 DB-A845
SCALE: 3" = 1'-0"

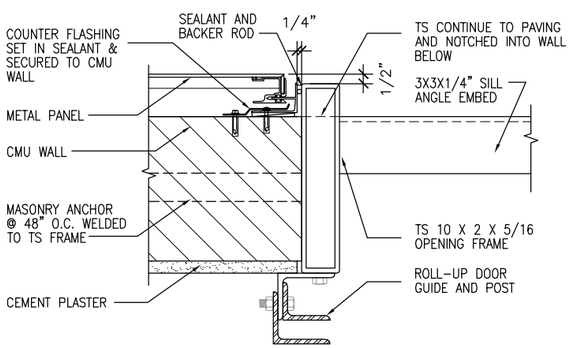

JAMB DETAIL (9) DB-A844 DB-A835
SCALE: 3" = 1'-0"

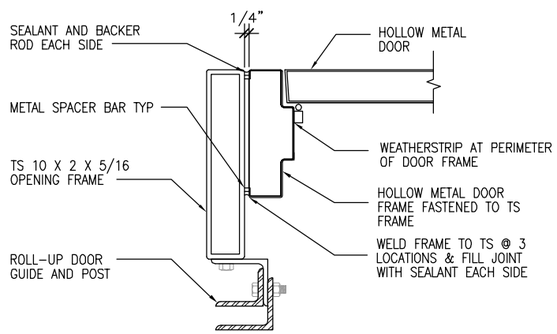

JAMB DETAIL (10) DB-A844 DB-A835
SCALE: 3" = 1'-0"

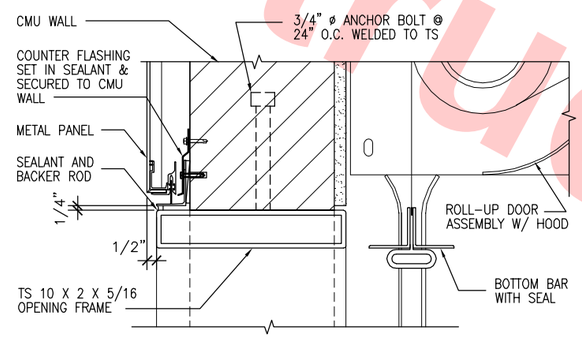

HEAD DETAIL (11) DB-A844 DB-A835
SCALE: 3" = 1'-0"

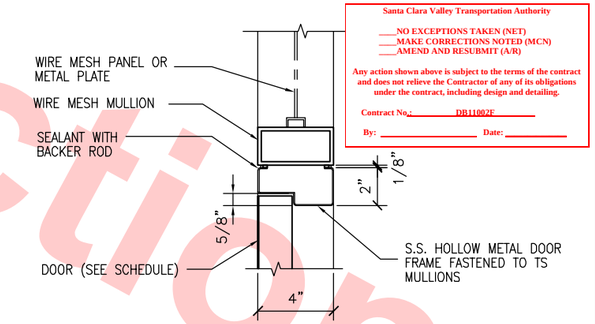

HEAD DETAIL (12) DB-A844 DB-A835 DB-A845
SCALE: 3" = 1'-0"

Santa Clara Valley Transportation Authority
___NO EXCEPTIONS TAKEN (NET)
___MAKE CORRECTIONS NOTED (MCN)
___AMEND AND RESUBMIT (A/R)
Any action shown above is subject to the terms of the contract and does not relieve the Contractor of any of its obligations under the contract, including design and detailing.
Contract No. DB11002E
By: _____ Date: _____

Not For Construction

REV	DATE	BY	SUB	APP	DESCRIPTION
0	20130710				READINESS FOR CONSTRUCTION

DESIGNED BY S. DEBNATH
DRAWN BY B. ITURALDE
CHECKED BY E. LOPEZ
IN CHARGE R. BARLAAN
DATE 20130710

LICENSED ARCHITECT SOMESH DEBNATH No. C21523 STATE OF CALIFORNIA

Skanska Shimmick Herzog
1436 California Circle
Milpitas, California 95035
A Joint Venture

Anil Verma Associates, Inc.
1970 Broadway, Suite 325 Oakland, CA 94612
Phone: (510) 835-2537 Fax: (510) 835-2339
SUBMITTED

Lockwood, Andrews & Newnam, Inc. A LEO A DALY COMPANY
T·Y·LIN INTERNATIONAL
APPROVED

VTA BART SILICON VALLEY
BART SILICON VALLEY BERRYESSA EXTENSION

LINE, TRACK, STATIONS AND SYSTEMS
DESIGN UNIT 023
ANCILLIARY BUILDING

EXTERIOR WALL DETAILS
SHEET 2 OF 2

CADD FILENAME C700-S-DB-A844.dwg
SIZE D | SCALE 3"=1'-0"
CONTRACT NO. C700 | REV. 0
AREA CODE DB | SHEET NO. A844 | PAGE NO. 0599

JosephG Jun 26, 2013 - 1:06pm C:\Current Projects\VTA-Berryessa Extension Project\Station - Milpitas\CAD\Drawings Out\13-0710 C700 Milpitas Station - RFC Submit\C700-S-DB-A844.dwg

WIRE MESH PANEL SCHEDULE

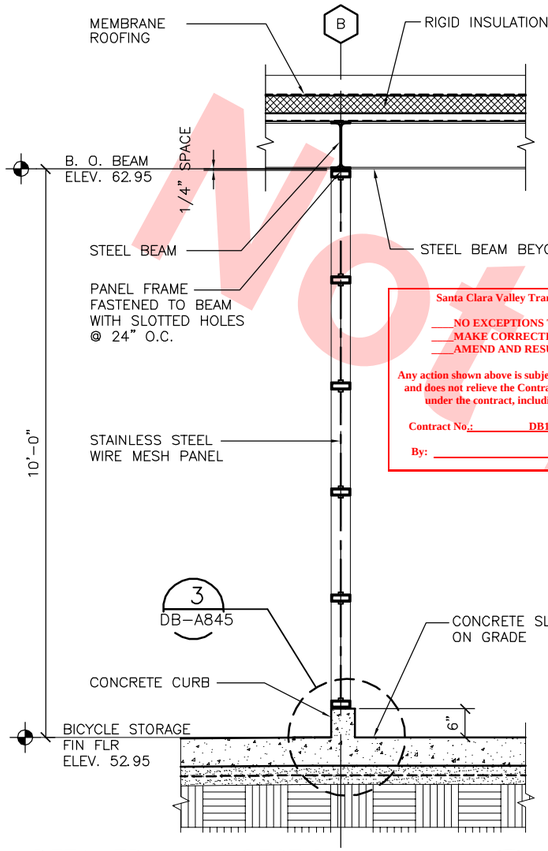

DETAILED WALL SECTION

SCALE: 3/4" = 1'-0"

1 DB-A845

DB-A812X
DB-A845

Santa Clara Valley Transportation Authority

___NO EXCEPTIONS TAKEN (NET)
___MAKE CORRECTIONS NOTED (MCN)
___AMEND AND RESUBMIT (A/R)

Any action shown above is subject to the terms of the contract and does not relieve the Contractor of any of its obligations under the contract, including design and detailing.

Contract No.: DB11002F

By: _____ Date: _____

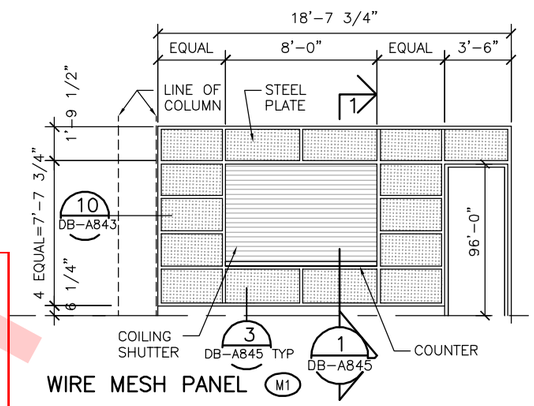

WIRE MESH PANEL (M1)

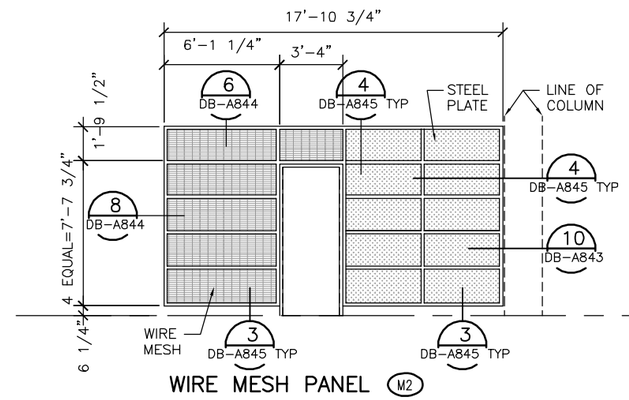

WIRE MESH PANEL (M2)

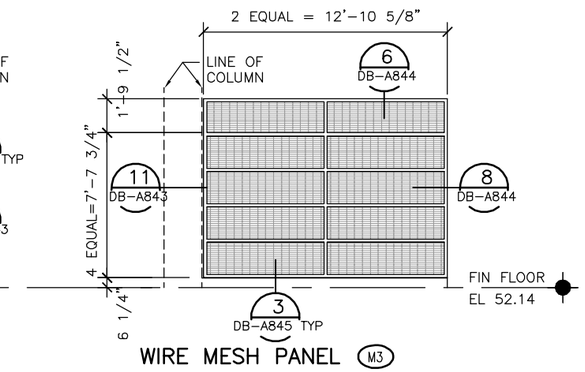

WIRE MESH PANEL (M3)

WIRE MESH PANEL MATERIAL SPECIFICATIONS:

VERTICAL/HORIZONTAL MULLIONS (FRAMES):
TS 4" X 2" X 3/16"
STAINLESS STEEL

MESH FRAME:
CHANNEL 1 3/4" X 9/16"
STAINLESS STEEL

WIRE MESH:
MCNICHOLS CO. NO. R831000048
STAINLESS STEEL 304

METAL PLATE
MCNICHOLS CO. NO. 383A125499
STAINLESS STEEL 304

FASTENERS:
EXPOSED FASTENERS SHALL BE ROUND CAP STAINLESS STEEL

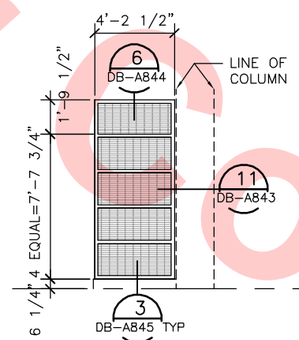

WIRE MESH PANEL (M4)

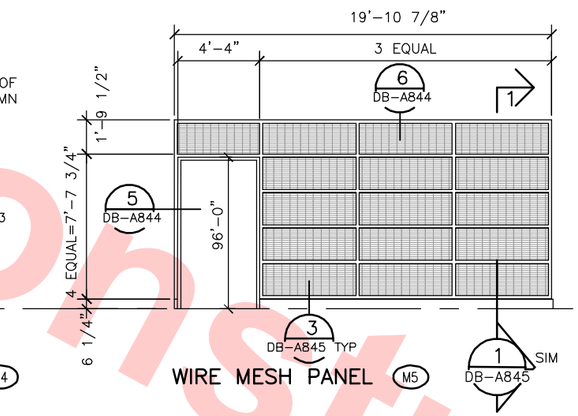

WIRE MESH PANEL (M5)

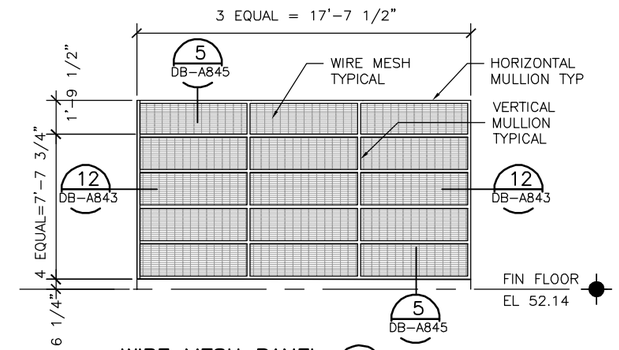

WIRE MESH PANEL (M6)

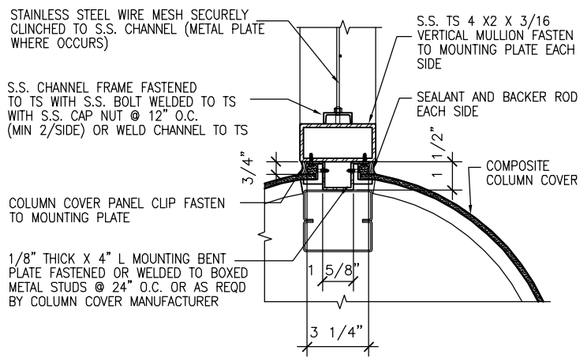

VERTICAL MULLION AT COLUMN

SCALE: 3" = 1'-0"

2 DB-A845

DB-A845

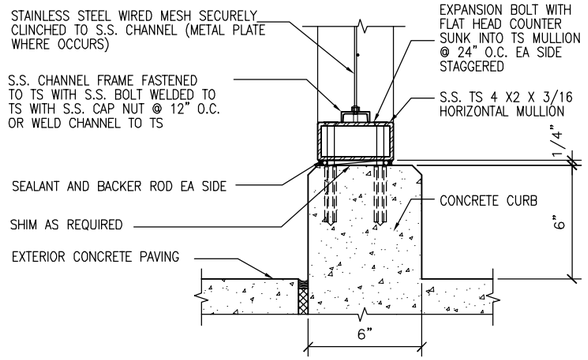

SILL DETAIL

SCALE: 3" = 1'-0"

3 DB-A845

DB-A845

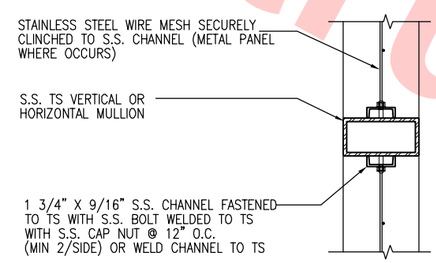

TYPICAL MULLION DETAIL

SCALE: 3" = 1'-0"

4 DB-A845

DB-A845

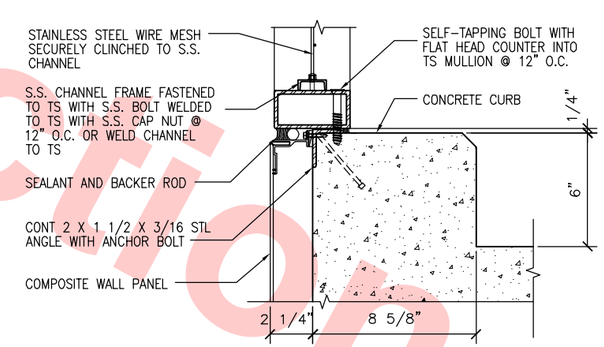

SILL DETAIL

SCALE: 3" = 1'-0"

5 DB-A845

DB-A845

Not For Construction

REV	DATE	BY	SUB	APP	DESCRIPTION
0	20130710				READINESS FOR CONSTRUCTION

DESIGNED BY S. DEBNATH
DRAWN BY B. ITURALDE
CHECKED BY E. LOPEZ
IN CHARGE R. BARLAAN
DATE 20130710

LICENSED ARCHITECT SOMESH DEBNATH No. C21523 STATE OF CALIFORNIA

Skanska Shimmick Herzog
1436 California Circle
Milpitas, California 95035
A Joint Venture

Anil Verma Associates, Inc.
1970 Broadway, Suite 525
Oakland, CA 94612
Phone: (510) 835-2537 Fax: (510) 835-2339

SUBMITTED

Lockwood, Andrews & Newnam, Inc. A LEO A DALY COMPANY
T·Y·LIN INTERNATIONAL

APPROVED

VTA BART SILICON VALLEY

BART SILICON VALLEY BERRYESSA EXTENSION

LINE, TRACK, STATIONS AND SYSTEMS
DESIGN UNIT 023
ANCILLARY BUILDING

WIRE MESH PANEL SCHEDULE

CADD FILENAME C700-S-DB-A845.dwg
SIZE D | SCALE AS NOTED
CONTRACT NO. C700 | REV. 0
AREA CODE DB | SHEET NO. A845 | PAGE NO. 0600

JosephG Jun 26, 2013 - 1:06pm G:\Current Projects\VTA-Berryessa Extension Project\Station - Milpitas\CAD\Drawings Out\13-0710 C700 Milpitas Station - RFC Submit\C700-S-DB-A845.dwg

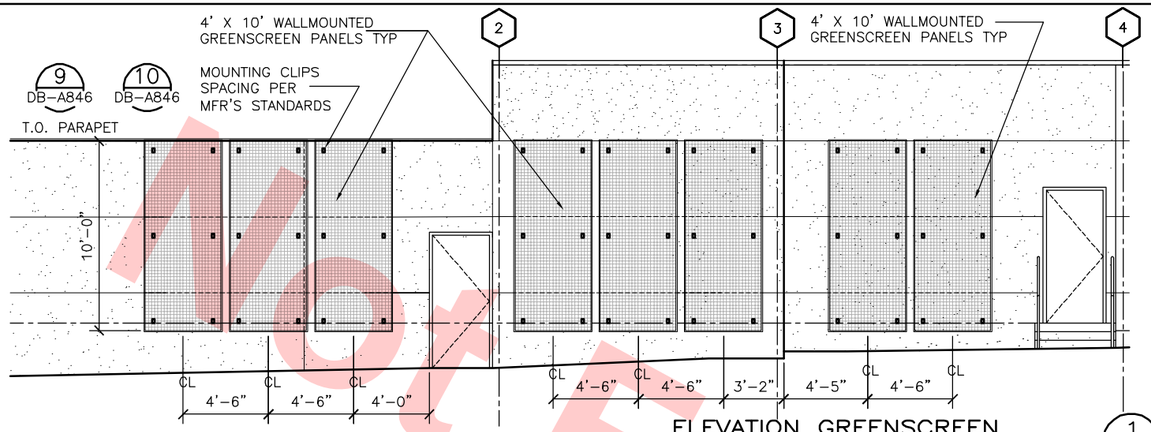

ELEVATION GREENSCREEN (1 / DB-A846 / DB-A821)
SCALE: 1/4" = 1'-0"

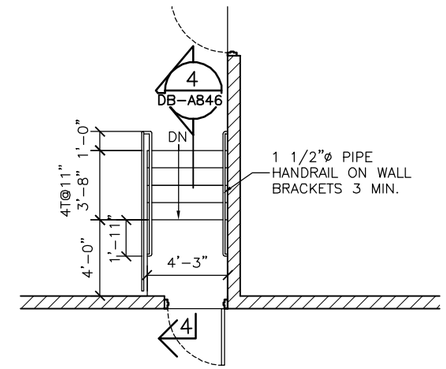

FLOOR PLAN STAIR NO. 1 (2 / DB-A846 / DB-A811X)
SCALE: 1/4" = 1'-0"

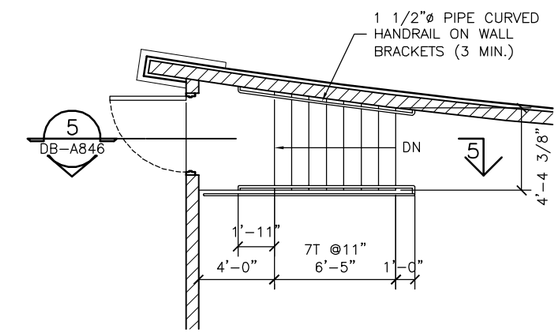

FLOOR PLAN STAIR NO. 2 (3 / DB-A846 / DB-A811X)
SCALE: 1/4" = 1'-0"

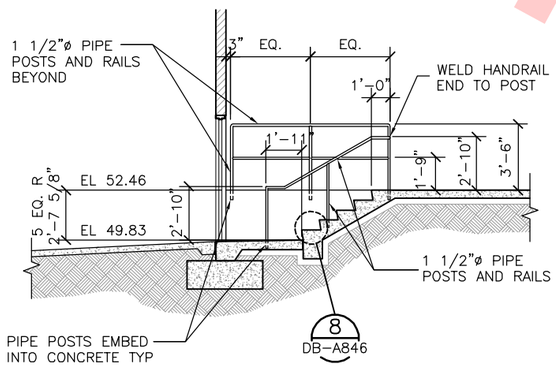

SECTION STAIR NO. 1 (4 / DB-A846 / DB-A846)
SCALE: 1/4" = 1'-0"

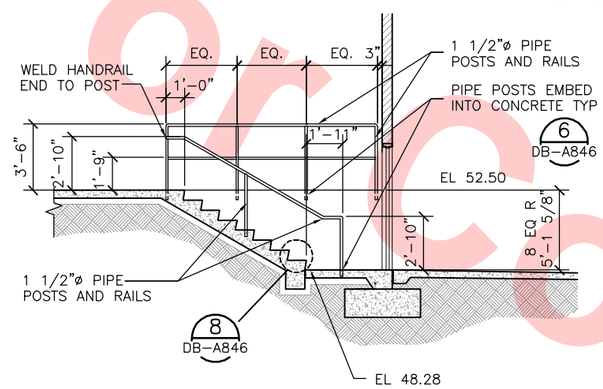

SECTION STAIR NO. 2 (5 / DB-A846 / DB-A846)
SCALE: 1/4" = 1'-0"

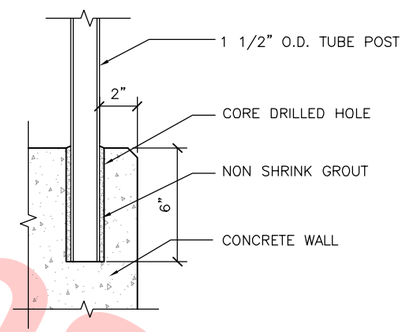

POST BASE DETAIL (6 / DB-A846 / DB-A846)
SCALE: 3" = 1'-0"

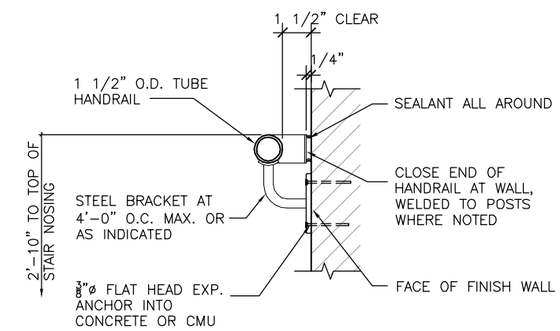

WALL BRACKET DETAIL (7 / DB-A846 / DB-A846)
SCALE: 3" = 1'-0"

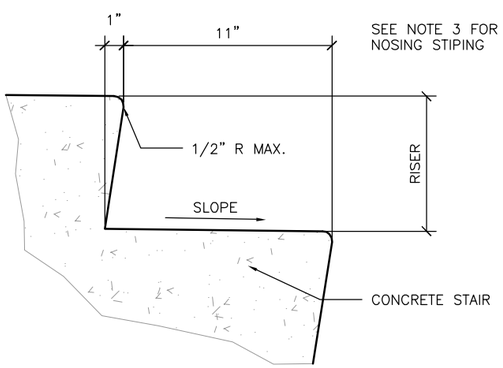

TREAD AND RISER DETAIL (8 / DB-A846 / DB-A846)
SCALE: 3" = 1'-0"

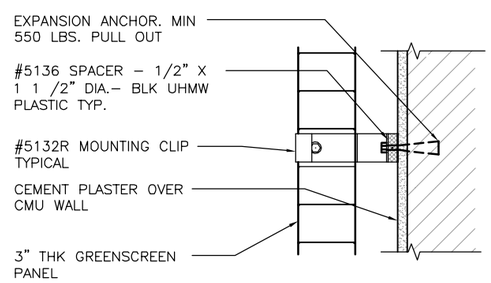

GREENSCREEN MOUNTING PLAN (9 / DB-A846 / DB-A846)
SCALE: 3" = 1'-0"

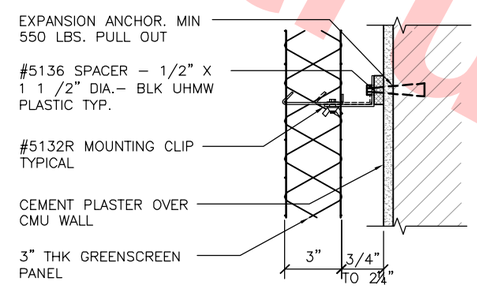

GREENSCREEN MOUNTING SECTION (10 / DB-A846 / DB-A846)
SCALE: 3" = 1'-0"

NOTES

1. PIPE RAILING CONNECTIONS SHALL BE FULLY WELDED AND GROUND SMOOTH. HANDGRIP PORTION OF HANDRAILS SHALL HAVE SMOOTH SURFACES WITH NO SHARP EDGES.
2. TREAD SURFACES SHALL BE SLIP RESISTANT AND SHALL SLOPE 1/8" PER FOOT TOWARDS THE LEADING EDGE.
3. ALL STAIR TREADS SHALL BE MARKED BY A 2" WIDE CONTRASTING COLOR PAINT STRIP PARALLEL TO 1" FROM NOSE OF STEP OR LANDING.

Santa Clara Valley Transportation Authority

____NO EXCEPTIONS TAKEN (NET)
____MAKE CORRECTIONS NOTED (MCN)
____AMEND AND RESUBMIT (A/R)

Any action shown above is subject to the terms of the contract and does not relieve the Contractor of any of its obligations under the contract, including design and detailing.

Contract No.: DB11002F

By: _____ Date: _____

Not For Construction

REV	DATE	BY	SUB	APP	DESCRIPTION
0	20130710				READINESS FOR CONSTRUCTION

DESIGNED BY S. DEBNATH
DRAWN BY G. LEVASHOV
CHECKED BY E. LOPEZ
IN CHARGE R. BARLAAN
DATE 20130710

LICENSED ARCHITECT SOMESH DEBNATH No. C21523 STATE OF CALIFORNIA

Skanska Shimmick Herzog
1436 California Circle Milpitas, California 95035
A Joint Venture

Anil Verma Associates, Inc.
1970 Broadway, Suite 535 Oakland, CA 94612
Phone: (510) 835-2537 Fax: (510) 835-2339
SUBMITTED

Lockwood, Andrews & Newnam, Inc. A LEO A DALY COMPANY
T·Y·LIN INTERNATIONAL
APPROVED

VTA BART SILICON VALLEY
BART SILICON VALLEY BERRYESSA EXTENSION

LINE, TRACK, STATIONS AND SYSTEMS DESIGN UNIT 023
ANCILLARY BUILDING

ELEVATION OF GREEN WALL AND DETAILS

CADD FILENAME C700-S-DB-A846.dwg
SIZE D | SCALE AS NOTED
CONTRACT NO. C700 | REV. 0
AREA CODE DB | SHEET NO. A846 | PAGE NO. 0601

JosephG Jun 26, 2013 – 1:07pm G:\Current Projects\VTA-Berryessa Extension Project\Station – Milpitas\CAD\Drawings Out\13-0710 C700 Milpitas Station – RFC Submit\C700-S-DB-A846.dwg

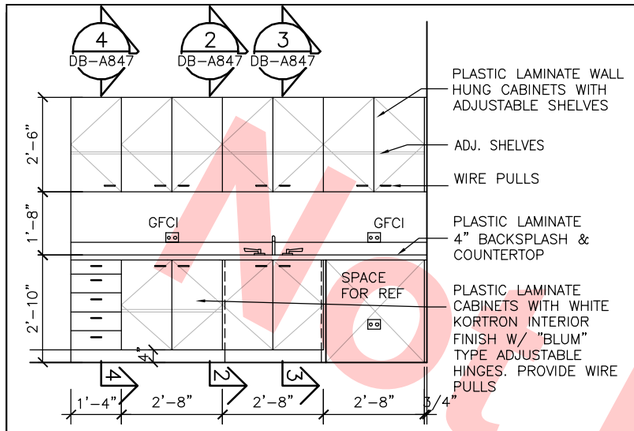

MILLWORK ELEVATION 1 DB-A847 DB-A825
SCALE: 1/2" = 1'-0"

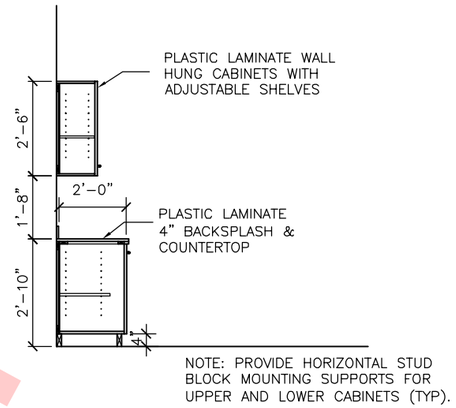

MILLWORK SECTION 2 DB-A847
SCALE: 1/2" = 1'-0"

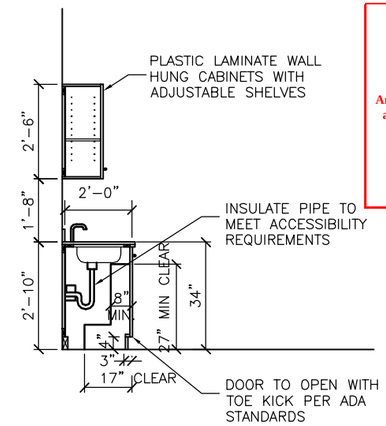

MILLWORK SECTION 3 DB-A847
SCALE: 1/2" = 1'-0"

Santa Clara Valley Transportation Authority

____NO EXCEPTIONS TAKEN (NET)
____MAKE CORRECTIONS NOTED (MCN)
____AMEND AND RESUBMIT (A/R)

Any action shown above is subject to the terms of the contract and does not relieve the Contractor of any of its obligations under the contract, including design and detailing.

Contract No.: DB11002F

By: _____ Date: _____

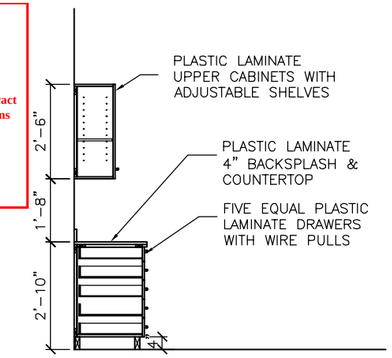

MILLWORK SECTION 4 DB-A847
SCALE: 1/2" = 1'-0"

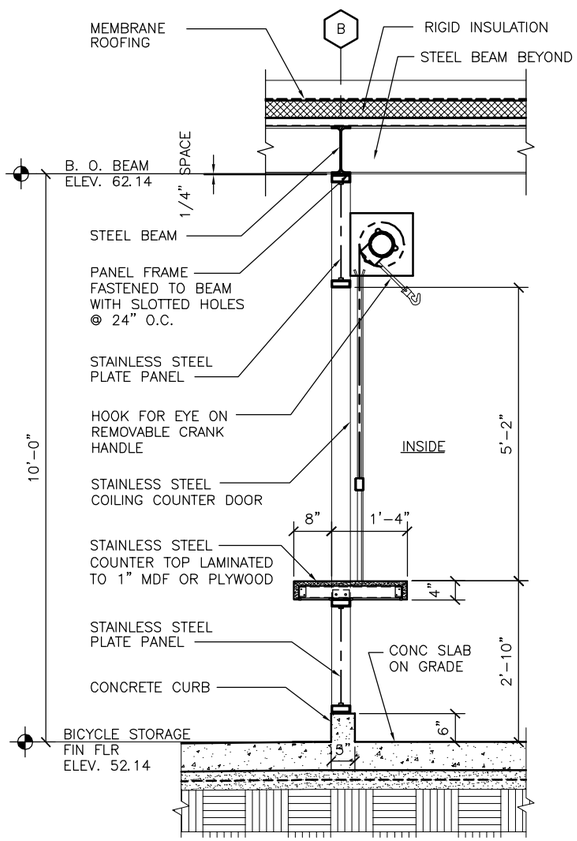

SECTION THRU COUNTER 8 DB-A847 DB-A826
SCALE: 3/4" = 1'-0"

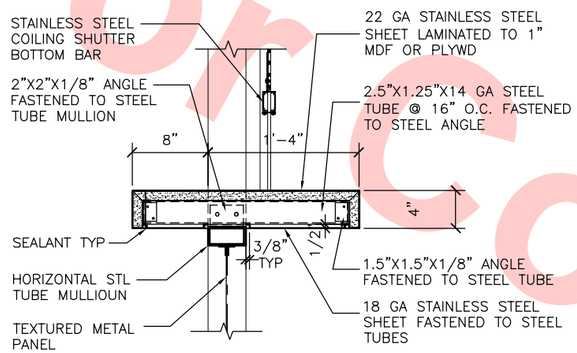

COUNTER DETAIL 5 DB-A847
SCALE: 1 1/2" = 1'-0"

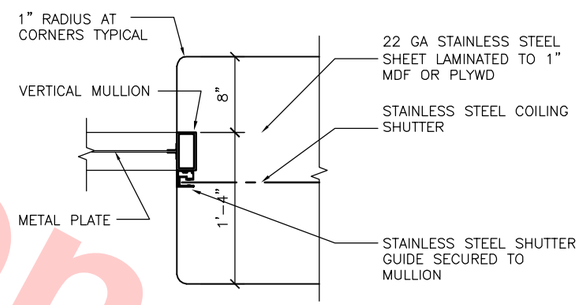

MULLION/GUIDE DETAIL 6 DB-A847
SCALE: 1 1/2" = 1'-0"

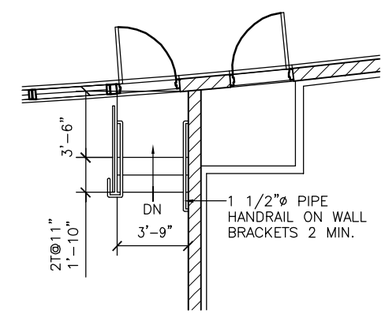

FLOOR PLAN STAIR NO. 3 7 DB-A847
SCALE: 1/4" = 1'-0"

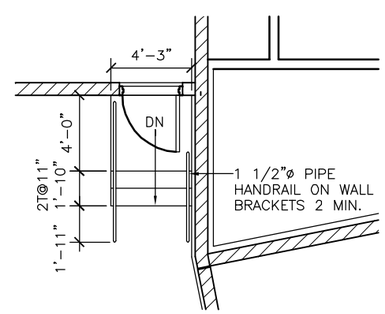

FLOOR PLAN STAIR NO. 4 9 DB-A847
SCALE: 1/4" = 1'-0"

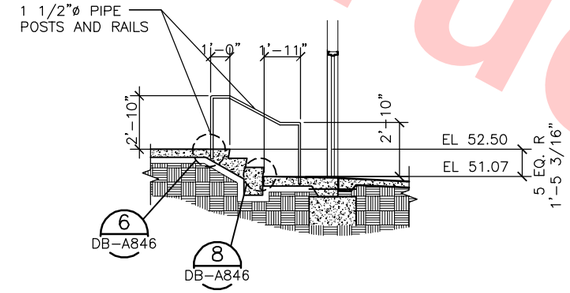

SECTION STAIR NO. 3 10 DB-A847
SCALE: 1/4" = 1'-0"

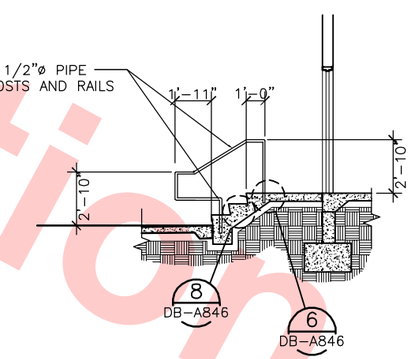

SECTION STAIR NO. 4 11 DB-A847
SCALE: 1/4" = 1'-0"

Not For Construction

REV	DATE	BY	SUB	APP	DESCRIPTION
0	20130710				READINESS FOR CONSTRUCTION

DESIGNED BY S. DEBNATH
DRAWN BY G. LEVASHOV
CHECKED BY E. LOPEZ
IN CHARGE R. BARLAAN
DATE 20130710

LICENSED ARCHITECT SOMESH DEBNATH No. C21523 STATE OF CALIFORNIA

Skanska Shimmick Herzog
1436 California Circle Milpitas, California 95035
A Joint Venture

Anil Verma Associates, Inc.
1970 Broadway, Suite 325 Oakland, CA 94612
Phone: (510) 535-2537 Fax: (510) 535-2339
SUBMITTED

Lockwood, Andrews & Newnam, Inc. A LEO A DALY COMPANY
T·Y·LIN INTERNATIONAL
APPROVED

VTA BART SILICON VALLEY
BART SILICON VALLEY BERRYESSA EXTENSION

LINE, TRACK, STATIONS AND SYSTEMS
DESIGN UNIT 023
ANCILLARY BUILDING

MISCELLANEOUS DETAILS

CADD FILENAME C700-S-DB-A847.dwg
SIZE D | SCALE AS NOTED
CONTRACT NO. C700 | REV. 0
AREA CODE DB | SHEET NO. A847 | PAGE NO. 0602

Joseph G Jun 26, 2013 – 1:07pm G:\Current Projects\VTA-Berryessa Extension Project\Station – Milpitas\CAD\Drawings Out\13-0710 C700 Milpitas Station – RFC Submit\C700-S-DB-A847.dwg

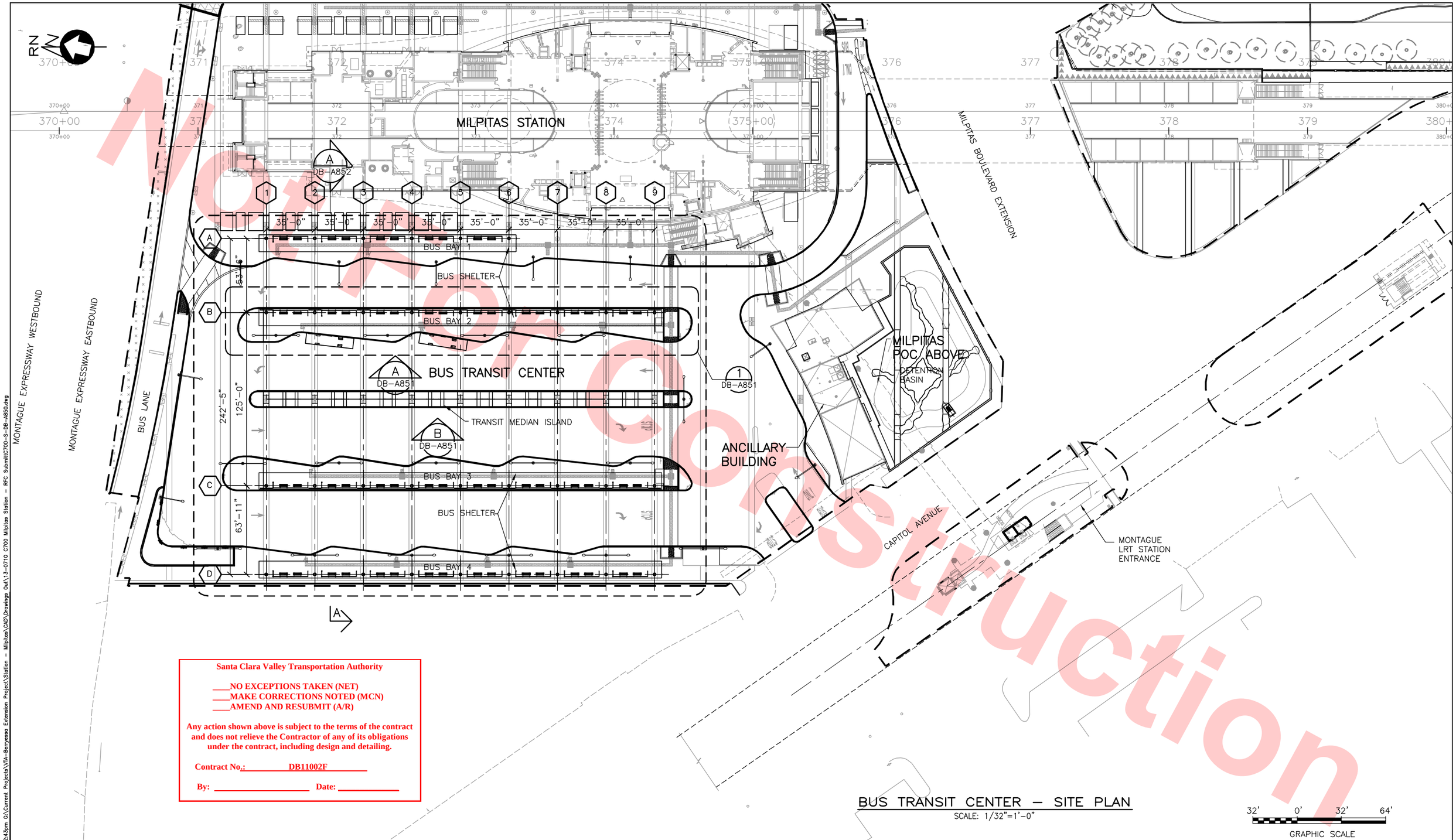

Not for Construction

Santa Clara Valley Transportation Authority

____NO EXCEPTIONS TAKEN (NET)
____MAKE CORRECTIONS NOTED (MCN)
____AMEND AND RESUBMIT (A/R)

Any action shown above is subject to the terms of the contract and does not relieve the Contractor of any of its obligations under the contract, including design and detailing.

Contract No.: DB11002F

By: _____ Date: _____

BUS TRANSIT CENTER – SITE PLAN

SCALE: 1/32"=1'-0"

32' 0' 32' 64'
GRAPHIC SCALE

REV	DATE	BY	SUB	APP	DESCRIPTION
0	20130710				READINESS FOR CONSTRUCTION

DESIGNED BY S. DEBNATH
DRAWN BY K. STEPANIAN
CHECKED BY E. BALLADA
IN CHARGE R. BARLAAN
DATE 20130710

LICENSED ARCHITECT SOMESH DEBNATH No. C21523 STATE OF CALIFORNIA

Skanska Shimmick Herzog
1436 California Circle
Milpitas, California 95035
A Joint Venture

Anil Verma Associates, Inc.
1970 Broadway, Suite 325
Oakland, CA 94612
Phone: (510) 835-2537 Fax: (510) 835-2339

Lockwood, Andrews & Newnam, Inc. A LEO A DALY COMPANY
T·Y·LIN INTERNATIONAL

SUBMITTED _____
APPROVED _____

VTA BART SILICON VALLEY
BART SILICON VALLEY BERRYESSA EXTENSION

LINE, TRACK, STATIONS AND SYSTEMS
DESIGN UNIT 023
TRANSIT CENTER BUS SHELTER

SITE PLAN

CADD FILENAME C700-S-DB-A850.dwg
SIZE D | SCALE 1/32"=1'-0"
CONTRACT NO. C700 | REV. 0
AREA CODE DB | SHEET NO. A850 | PAGE NO. 0603

Joseph G Jun 26, 2013 – 12:43pm G:\Current Projects\VTA-Berryessa Extension Project\Station – Milpitas\CAD\Drawings Out\13-0710 C700 Milpitas Station – RFC Submit\C700-S-DB-A850.dwg

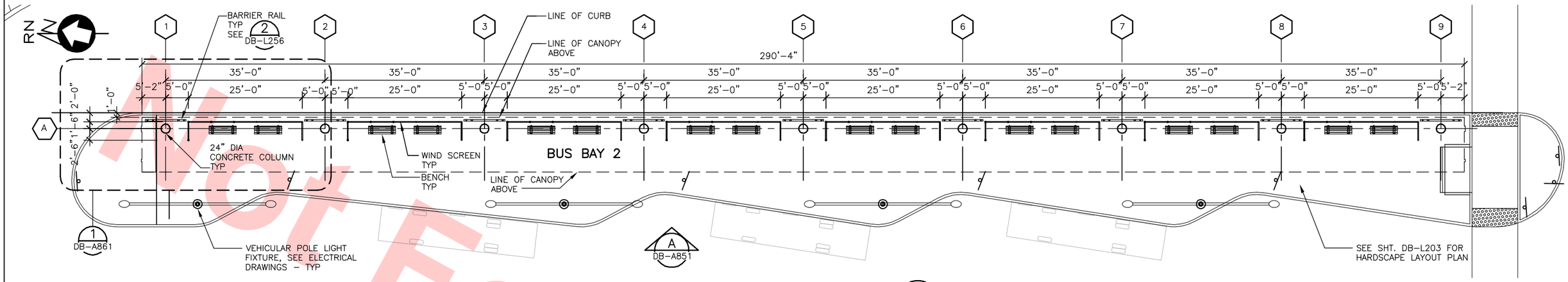

PLAN OF BUS BAY 2 (1 DB-A851) DB-A850

SCALE: 3/32"=1'-0"

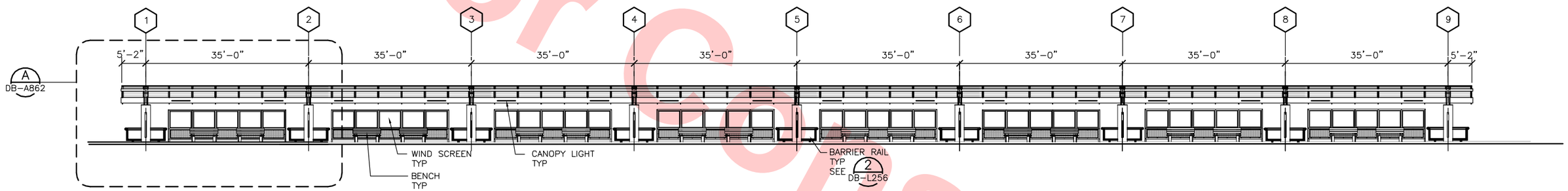

ELEVATION OF BUS BAY 2 (A DB-A851) DB-A850

SCALE: 3/32"=1'-0"

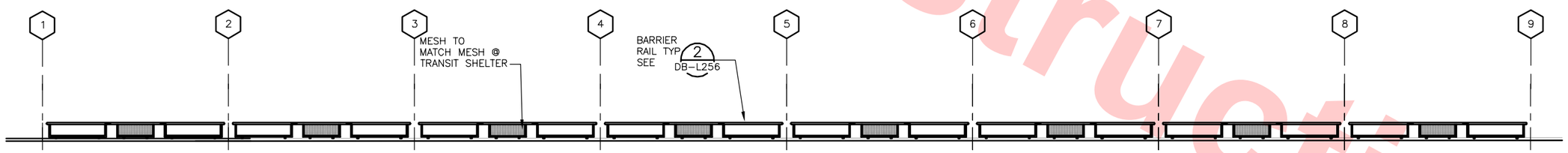

ELEVATION OF TRANSIT MEDIAN ISLAND (B DB-A851) DB-A850

SCALE: 3/32"=1'-0"

Santa Clara Valley Transportation Authority

____NO EXCEPTIONS TAKEN (NET)
____MAKE CORRECTIONS NOTED (MCN)
____AMEND AND RESUBMIT (A/R)

Any action shown above is subject to the terms of the contract and does not relieve the Contractor of any of its obligations under the contract, including design and detailing.

Contract No.: DB11002F

By: _____ Date: _____

4' 0' 4' 12' 20' 28'

GRAPHIC SCALE

Not For Construction

REV	DATE	BY	SUB	APP	DESCRIPTION
0	20130710				READINESS FOR CONSTRUCTION

DESIGNED BY S. DENATH
DRAWN BY K. STEPANIAN
CHECKED BY E. BALLADA
IN CHARGE R. BARLAAN
DATE 20130710

LICENSED ARCHITECT SOMESH DEBNATH No. C21523 STATE OF CALIFORNIA

Skanska Shimmick Herzog
1436 California Circle
Milpitas, California 95035
A Joint Venture

Anil Verma Associates, Inc.
1970 Broadway, Suite 535 Oakland, CA 94612
Phone: (510) 835-2537 Fax: (510) 535-2339
SUBMITTED

Lockwood, Andrews & Newnam, Inc. A LAN & BALY COMPANY
T·Y·LIN INTERNATIONAL
APPROVED

VTA BART SILICON VALLEY
BART SILICON VALLEY BERRYESSA EXTENSION

LINE, TRACK, STATIONS AND SYSTEMS DESIGN UNIT 023
TRANSIT CENTER BUS SHELTER

PLAN AND ELEVATION OF BUS BAY

CADD FILENAME C700-S-DB-A851.dwg
SIZE D | SCALE 3/32"=1'-0"
CONTRACT NO. C700 | REV. 0
AREA CODE DB | SHEET NO. A851 | PAGE NO. 0604

JoseinG Jun 26, 2013 - 12:44pm G:\Current Projects\VTA-Berryessa Extension Project\Station - Milpitas\CAD\Drawings Out\13-0710 C700 Milpitas Station - RFC Submittl\C700-S-DB-A851.dwg

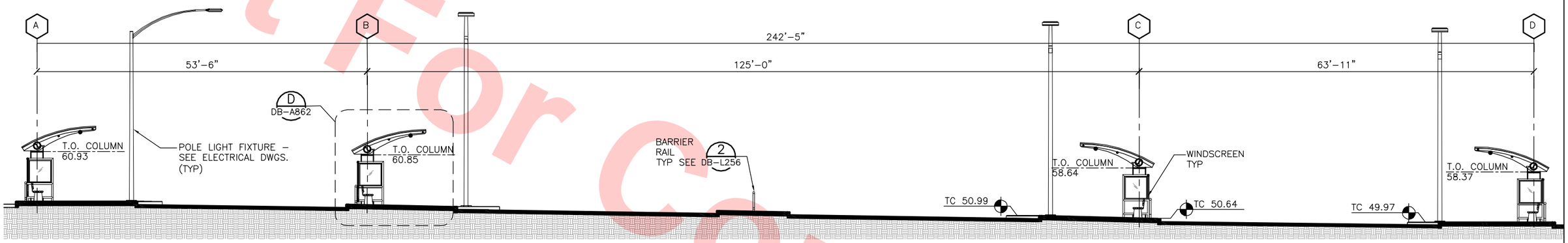

SITE SECTION (A / DB-A852) DB-A850

SCALE: 1/8"=1'-0"

Not For Construction

Santa Clara Valley Transportation Authority

____NO EXCEPTIONS TAKEN (NET)
____MAKE CORRECTIONS NOTED (MCN)
____AMEND AND RESUBMIT (A/R)

Any action shown above is subject to the terms of the contract and does not relieve the Contractor of any of its obligations under the contract, including design and detailing.

Contract No.: DB11002F

By: _____ **Date:** _____

8' 0' 8' 16'

GRAPHIC SCALE

REV	DATE	BY	SUB	APP	DESCRIPTION
0	20130710				READINESS FOR CONSTRUCTION

DESIGNED BY S. DEBNATH
DRAWN BY K. STEPANIAN
CHECKED BY E. BALLADA
IN CHARGE R. BARLAAN
DATE 20130710

LICENSED ARCHITECT SOMESH DEBNATH No. C21523 STATE OF CALIFORNIA

Skanska Shimmick Herzog
1436 California Circle
Milpitas, California 95035
A Joint Venture

Anil Verma Associates, Inc.
1970 Broadway, Suite 525 Oakland, CA 94612
Phone: (510) 835-2537 Fax: (510) 835-2339
SUBMITTED

Lockwood, Andrews & Newnam, Inc. A LEO A DALY COMPANY
T·Y·LIN INTERNATIONAL
APPROVED

VTA BART SILICON VALLEY
BART SILICON VALLEY BERRYESSA EXTENSION

LINE, TRACK, STATIONS AND SYSTEMS
DESIGN UNIT 023
TRANSIT CENTER BUS SHELTER

SITE SECTION

CADD FILENAME C700-S-DB-A852.dwg
SIZE D | SCALE 1/8"=1'-0"
CONTRACT NO. C700 | REV. 0
AREA CODE DB | SHEET NO. A852 | PAGE NO. 0605

JosephG Jun 26, 2013 - 12:44pm G:\Current Projects\VTA-Berryessa Extension Project\Station - Milpitas\CAD\Drawings Out\13-0710 C700 Milpitas Station - RFC Submit\C700-S-DB-A852.dwg

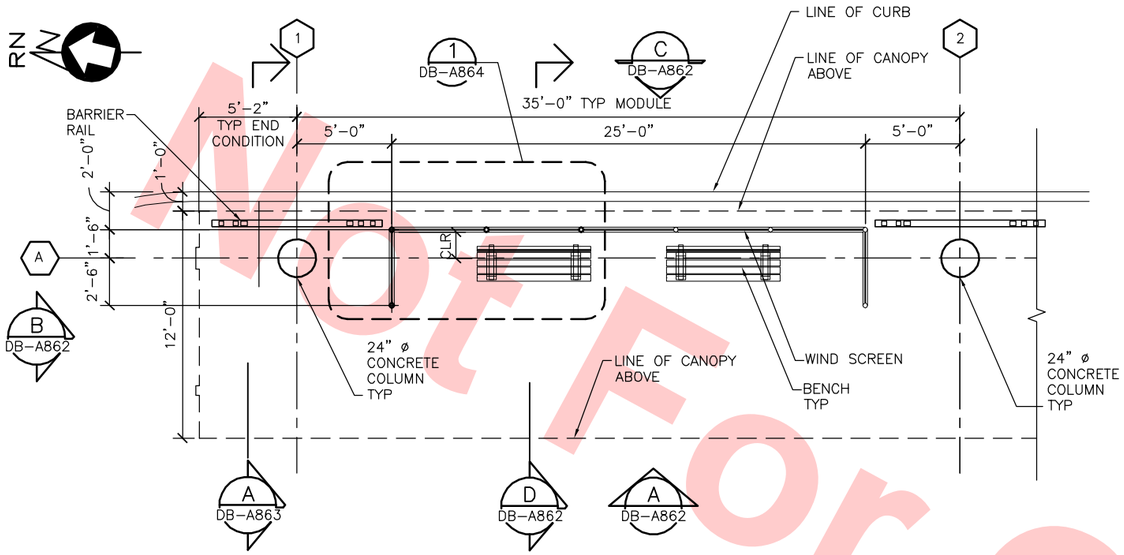

FLOOR PLAN 1 DB-A861
SCALE: 1/4"=1'-0"
DB-A851

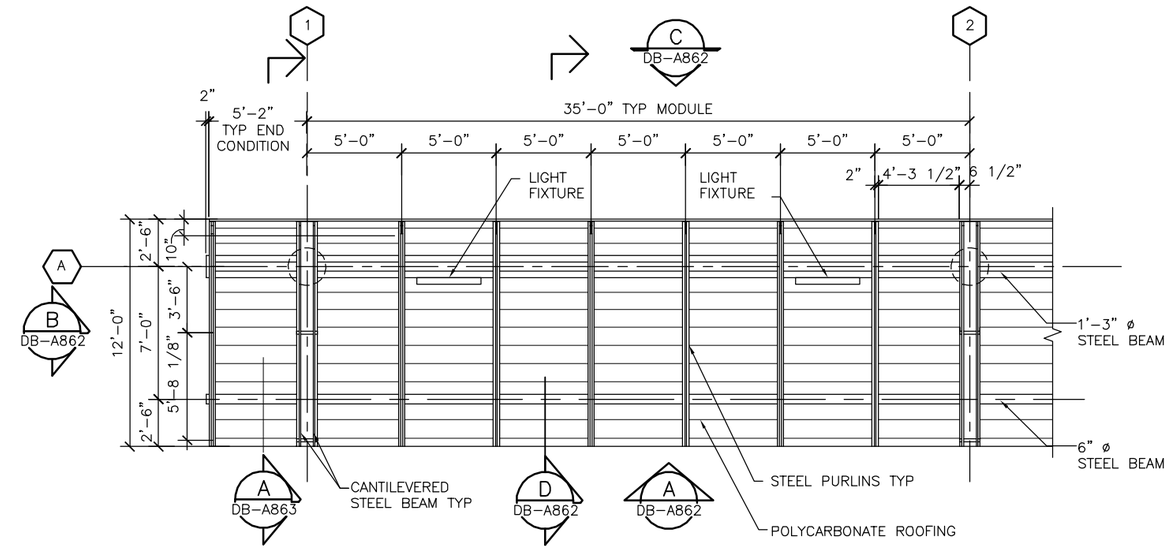

REFLECTED CEILING PLAN 3 DB-A861
SCALE: 1/4"=1'-0"

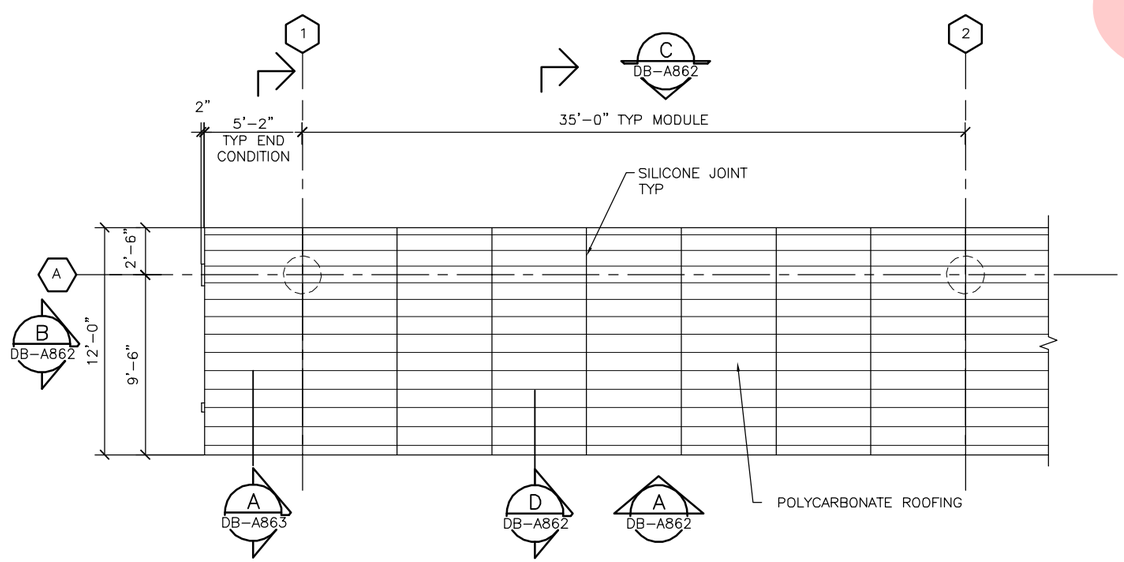

ROOF PLAN 2 DB-A861
SCALE: 1/4"=1'-0"

Santa Clara Valley Transportation Authority

____NO EXCEPTIONS TAKEN (NET)
____MAKE CORRECTIONS NOTED (MCN)
____AMEND AND RESUBMIT (A/R)

Any action shown above is subject to the terms of the contract and does not relieve the Contractor of any of its obligations under the contract, including design and detailing.

Contract No.: DB11002F

By: _____ **Date:** _____

4' 0' 4' 8'
GRAPHIC SCALE

Not For Construction

REV	DATE	BY	SUB	APP	DESCRIPTION
0	20130710				READINESS FOR CONSTRUCTION
					REPLACES C700-S-DB-A811, REV. P

DESIGNED BY S. DEBNATH
DRAWN BY K. STEPANIAN
CHECKED BY E. BALLADA
IN CHARGE R. BARLAAN
DATE 20130710

LICENSED ARCHITECT SOMESH DEBNATH No. C21523 STATE OF CALIFORNIA

Skanska Shimmick Herzog
1436 California Circle
Milpitas, California 95035
A Joint Venture

Anil Verma Associates, Inc.
1970 Broadway, Suite 525, Oakland, CA 94612
Phone: (510) 835-2537 Fax: (510) 835-2339

Lockwood, Andrews & Newnam, Inc. A CH2M HILL COMPANY

T·Y·LIN INTERNATIONAL

SUBMITTED _____
APPROVED _____

VTA BART SILICON VALLEY
BART SILICON VALLEY BERRYESSA EXTENSION

LINE, TRACK, STATIONS AND SYSTEMS DESIGN UNIT 023
TRANSIT CENTER BUS SHELTER
DETAIL PLANS

CADD FILENAME C700-S-DB-A861.dwg
SIZE D | SCALE 1/4"=1'-0"
CONTRACT NO. C700 | REV. 0
AREA CODE DB | SHEET NO. A861 | PAGE NO. 0606

JosephG Jun 26, 2013 – 12:48pm G:\Current Projects\VTA-Berryessa Extension Project\Station – Milpitas\CAD\Drawings Out\13-0710 C700 Milpitas Station – RFC Submit\C700-S-DB-A861.dwg

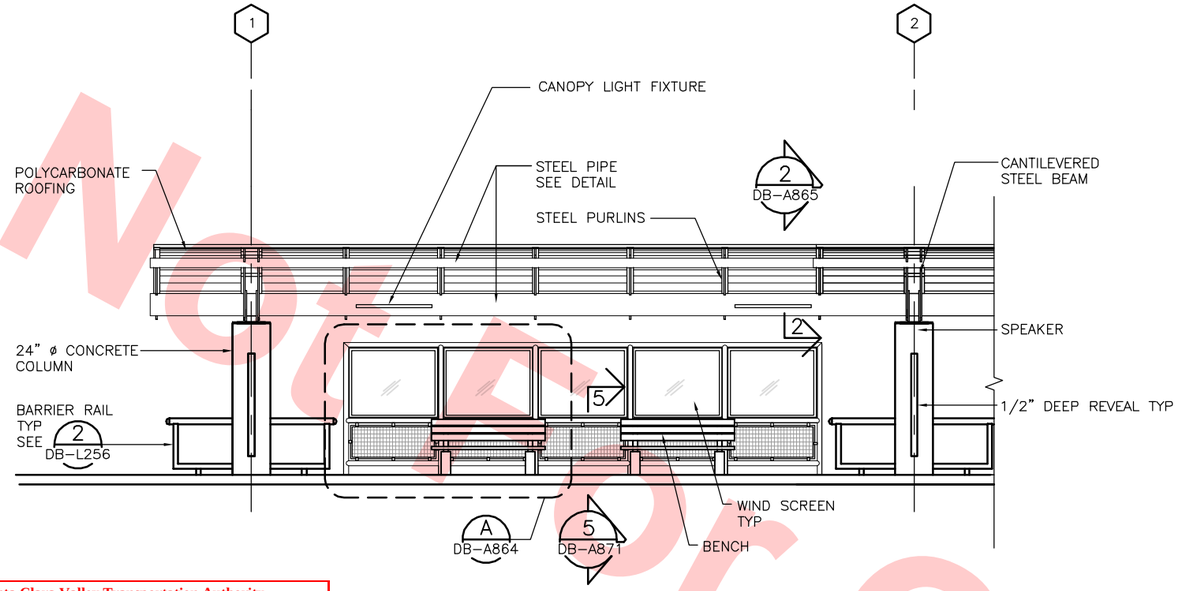

TYPICAL FRONT ELEVATION (A)
SCALE: 1/4"=1'-0"
DB-A862 DB-A851 DB-A861

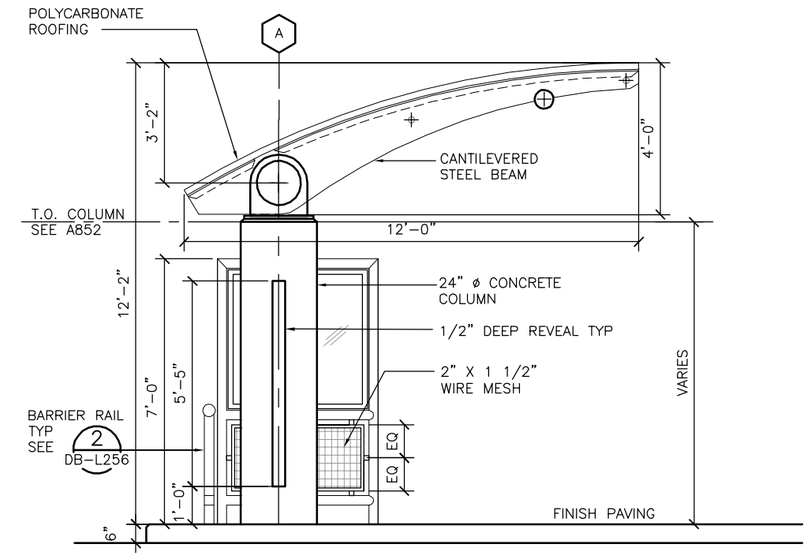

TYPICAL SECTION (B)
SCALE: 1/2"=1'-0"
DB-A862 DB-A861

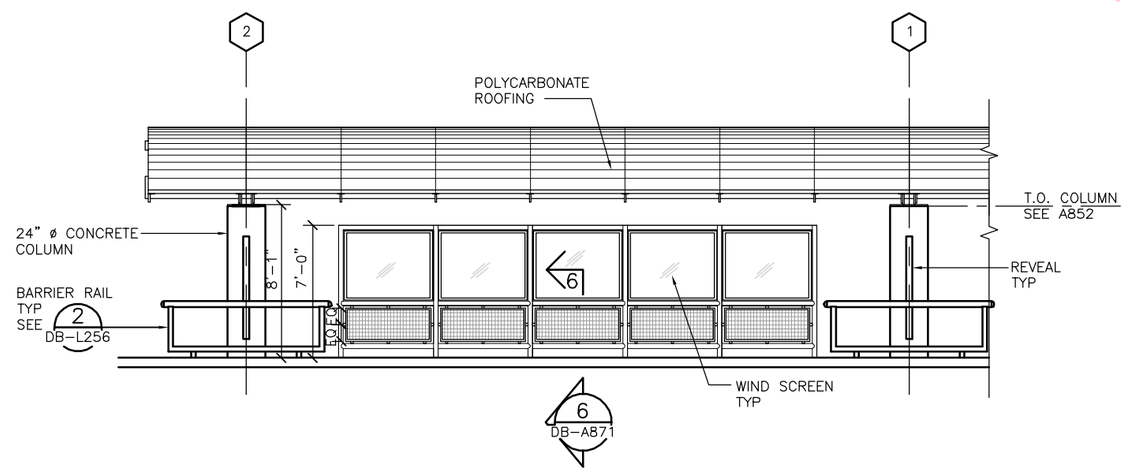

TYPICAL BAY REAR ELEVATION (C)
SCALE: 1/4"=1'-0"
DB-A862 DB-A861

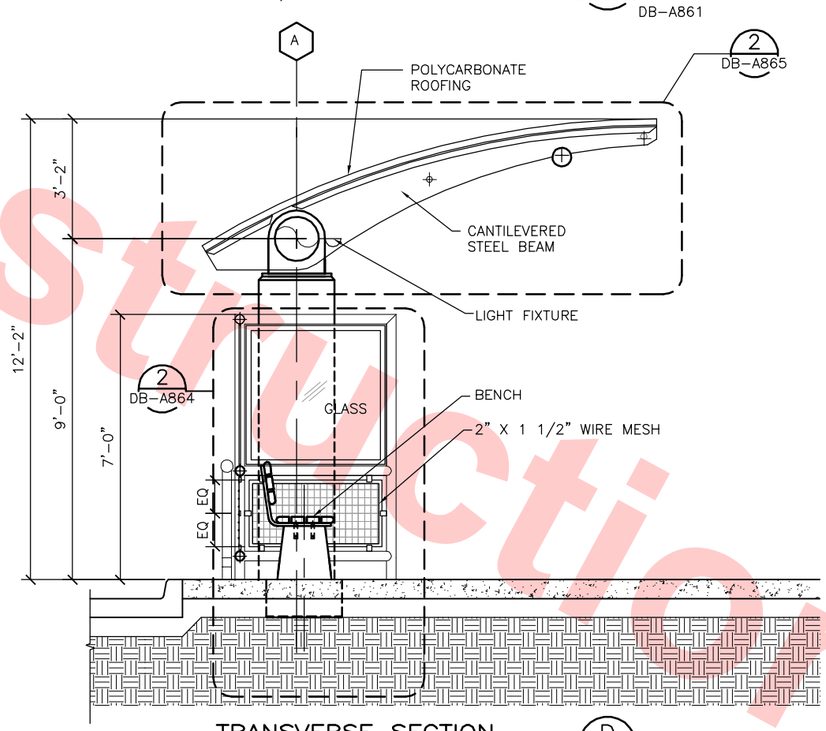

TRANSVERSE SECTION (D)
SCALE: 1/2"=1'-0"
DB-A862 DB-A852 DB-A861

Santa Clara Valley Transportation Authority

____NO EXCEPTIONS TAKEN (NET)
____MAKE CORRECTIONS NOTED (MCN)
____AMEND AND RESUBMIT (A/R)

Any action shown above is subject to the terms of the contract and does not relieve the Contractor of any of its obligations under the contract, including design and detailing.

Contract No.: DB11002F

By: _____ **Date:** _____

Not For Construction

REV	DATE	BY	SUB	APP	DESCRIPTION
0	20130710				READINESS FOR CONSTRUCTION

DESIGNED BY S.DEBNATH
DRAWN BY K.STEPANIAN
CHECKED BY E. BALLADA
IN CHARGE R. BARLAAN
DATE 20130710

LICENSED ARCHITECT SOMESH DEBNATH No. C21523 STATE OF CALIFORNIA

Skanska Shimmick Herzog
1436 California Circle
Milpitas, California 95035
A Joint Venture

Anil Verma Associates, Inc.
1970 Broadway, Suite 535 Oakland, CA 94612
Phone: (510) 835-2537 Fax: (510) 835-2339
SUBMITTED

Lockwood, Andrews & Newnam, Inc. A LAN & ANN COMPANY
T·Y·LIN INTERNATIONAL
APPROVED

VTA BART SILICON VALLEY
BART SILICON VALLEY BERRYESSA EXTENSION

LINE, TRACK, STATIONS AND SYSTEMS
DESIGN UNIT 023
TRANSIT CENTER BUS SHELTER

DETAIL ELEVATIONS

CADD FILENAME C700-S-DB-A862.dwg
SIZE D | SCALE AS NOTED
CONTRACT NO. C700 | REV. 0
AREA CODE DB | SHEET NO. A862 | PAGE NO. 0607

JosephG Jun 26, 2013 – 12:50pm G:\Current Projects\VTA-Berryessa Extension Project\Station – Milpitas\CAD\Drawings Out\13-0710 C700 Milpitas Station – RFC Submit\C700-S-DB-A862.dwg

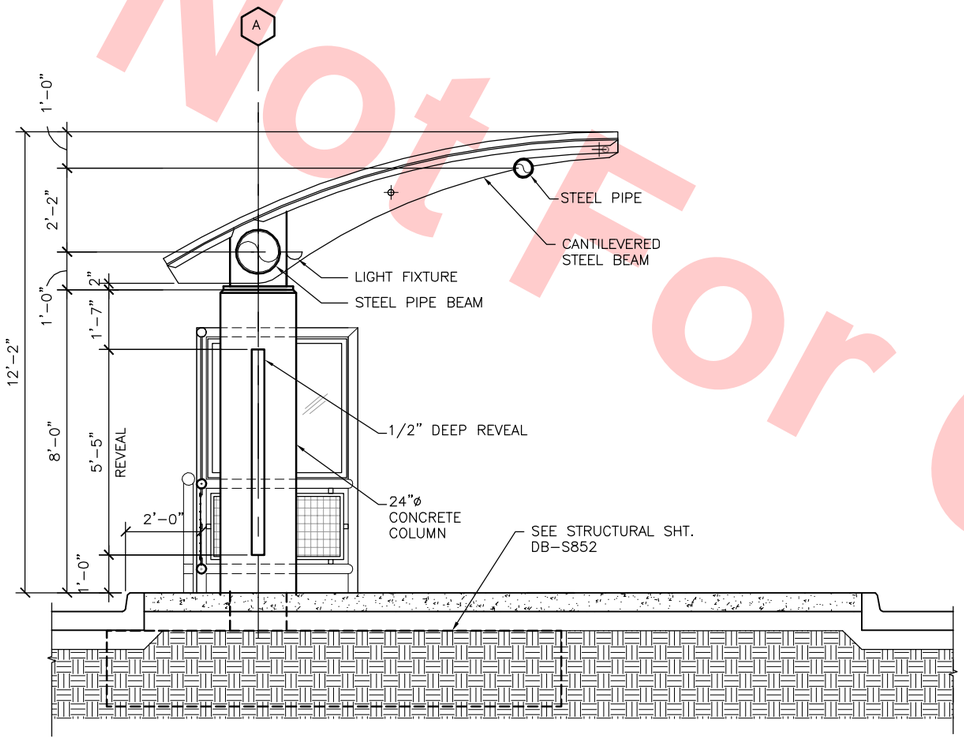

TRANSVERSE SECTION (A)

SCALE: 1/2"=1'-0"

DB-A863 DB-A861

Not For Construction

Santa Clara Valley Transportation Authority

____NO EXCEPTIONS TAKEN (NET)
____MAKE CORRECTIONS NOTED (MCN)
____AMEND AND RESUBMIT (A/R)

Any action shown above is subject to the terms of the contract and does not relieve the Contractor of any of its obligations under the contract, including design and detailing.

Contract No.: DB11002F

By: _____ **Date:** _____

REV	DATE	BY	SUB	APP	DESCRIPTION
0	20130710				READINESS FOR CONSTRUCTION

DESIGNED BY S. DEBNATH
DRAWN BY K. STEPANIAN
CHECKED BY E. BALLADA
IN CHARGE R. BARLAAN
DATE 20130710

LICENSED ARCHITECT SAMESH DEBNATH No. C21523 STATE OF CALIFORNIA

Skanska Shimmick Herzog
1436 California Circle
Milpitas, California 95035
A Joint Venture

Anil Verma Associates, Inc.
1970 Broadway, Suite 535 Oakland, CA 94612
Phone: (510) 835-2537 Fax: (510) 835-2339

SUBMITTED

Lockwood, Andrews & Newnam, Inc. A LAN & BALL COMPANY
T·Y·LIN INTERNATIONAL

APPROVED

VTA BART SILICON VALLEY
BART SILICON VALLEY BERRYESSA EXTENSION

LINE, TRACK, STATIONS AND SYSTEMS
DESIGN UNIT 023
TRANSIT CENTER BUS SHELTER

DETAIL SECTIONS

CADD FILENAME C700-S-DB-A863.dwg
SIZE D | SCALE 1/2"=1'-0"
CONTRACT NO. C700 | REV. 0
AREA CODE DB | SHEET NO. A863 | PAGE NO. 0608

JosephG Jun 26, 2013 – 12:52pm G:\Current Projects\VTA-Berryessa Extension Project\Station – Milpitas\CAD\Drawings Out\13-0710 C700 Milpitas Station – RFC Submittl\C700-S-DB-A863.dwg

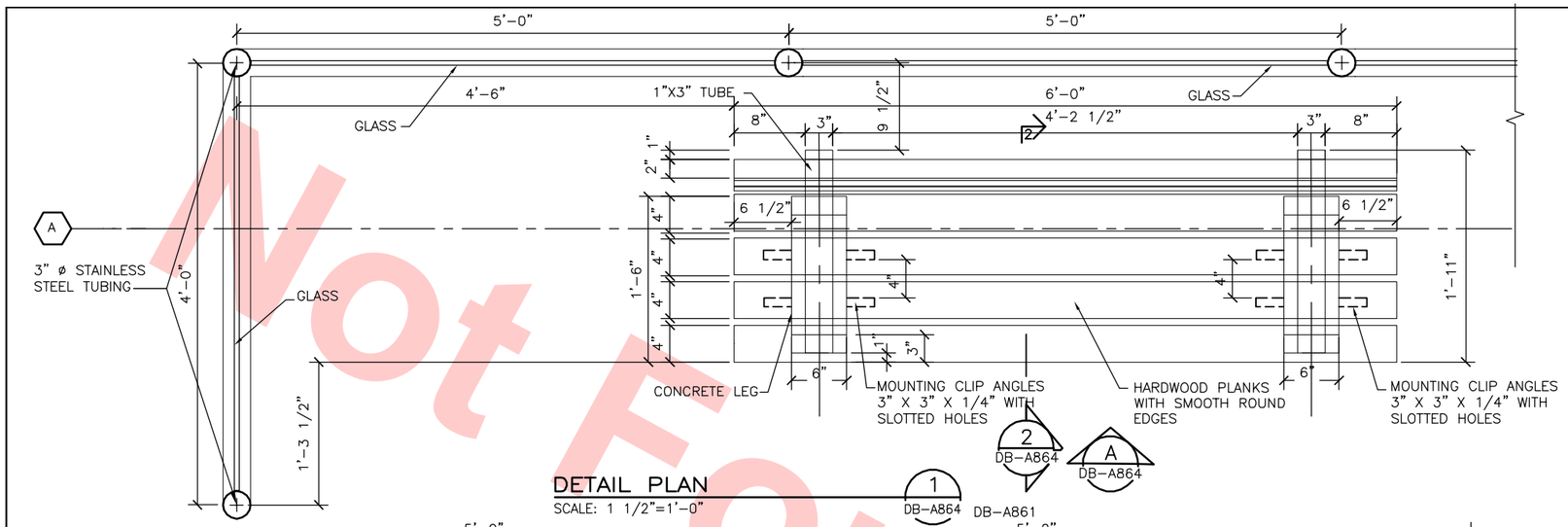

DETAIL PLAN

SCALE: 1 1/2"=1'-0"

1 DB-A864 DB-A861

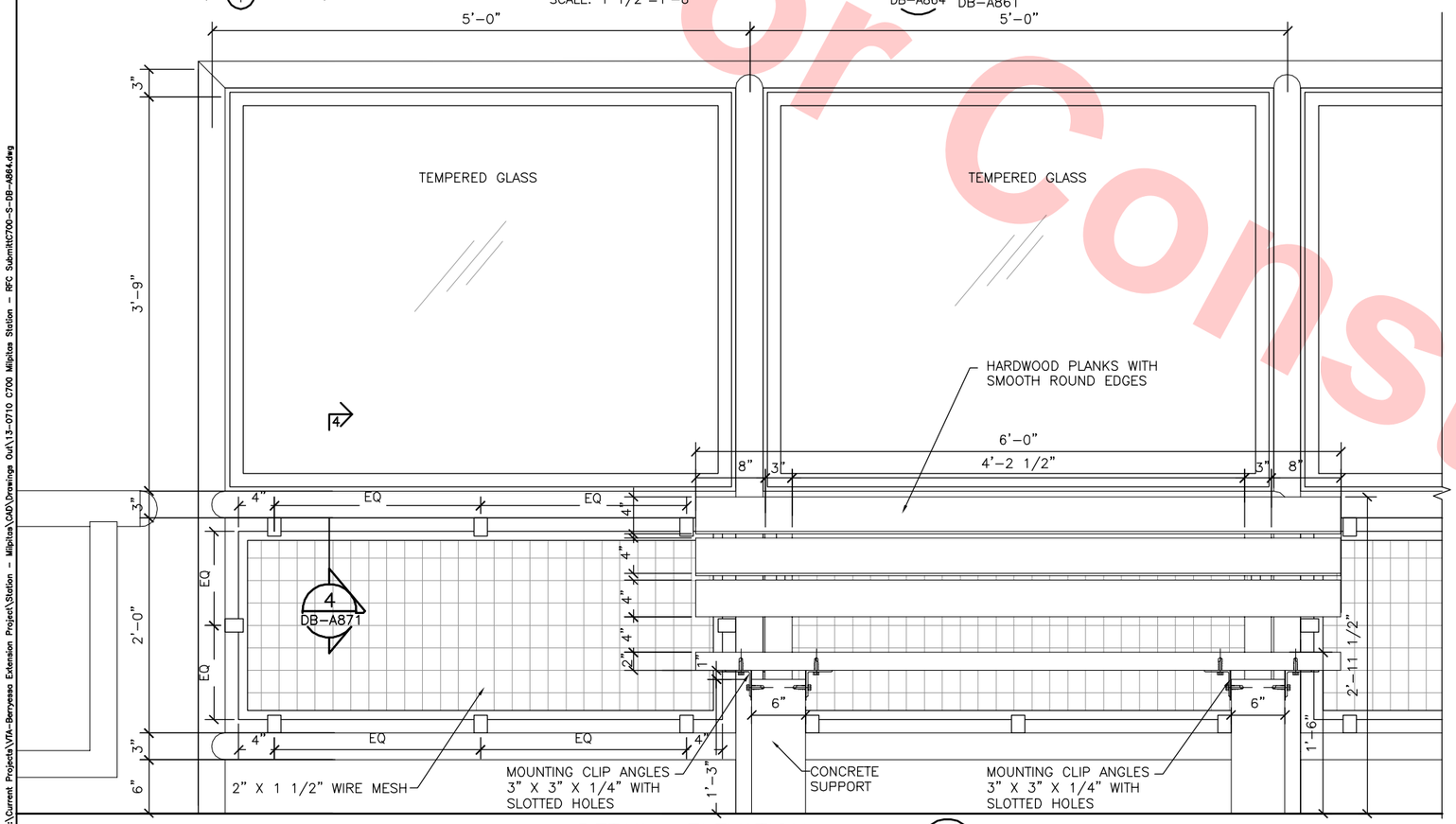

DETAIL ELEVATION

SCALE: 1 1/2"=1'-0"

A DB-A864 DB-A862

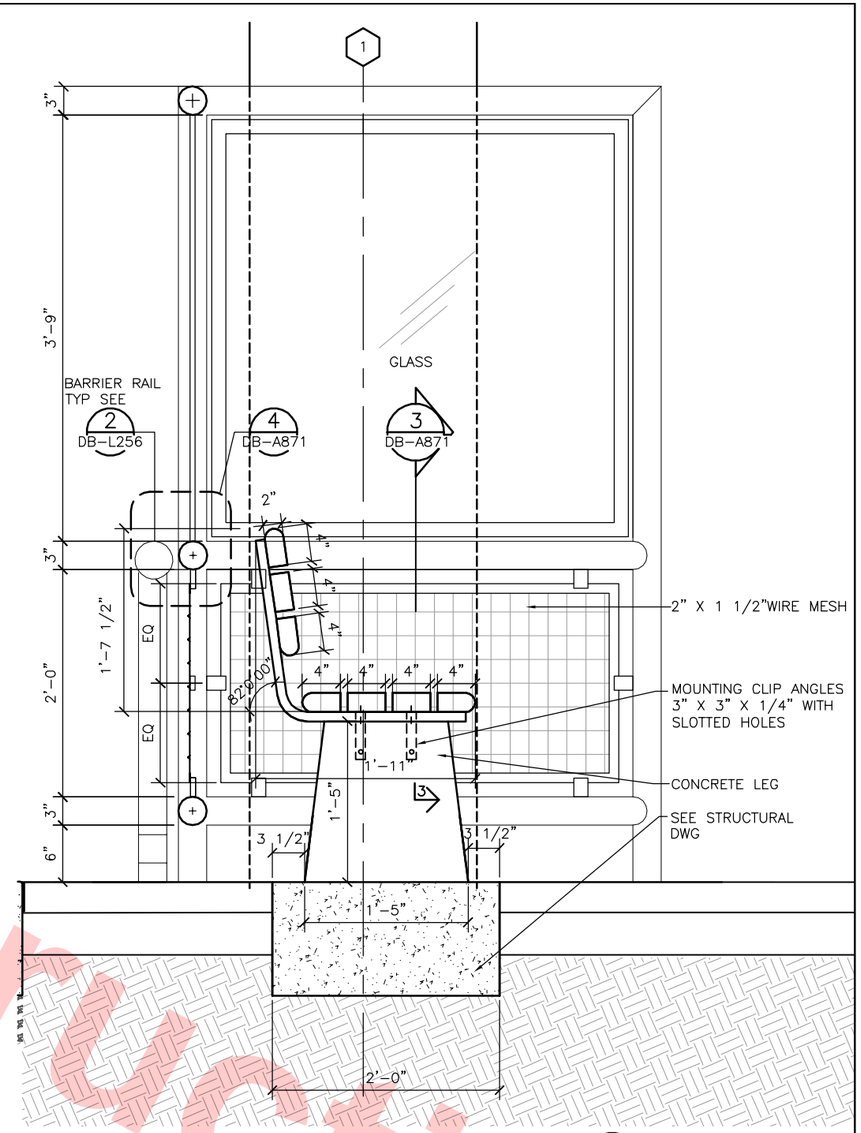

DETAIL SECTION

SCALE: 1 1/2"=1'-0"

2 DB-A864 DB-A863

Santa Clara Valley Transportation Authority

____NO EXCEPTIONS TAKEN (NET)
____MAKE CORRECTIONS NOTED (MCN)
____AMEND AND RESUBMIT (A/R)

Any action shown above is subject to the terms of the contract and does not relieve the Contractor of any of its obligations under the contract, including design and detailing.

Contract No.: DB11002F

By: _____ **Date:** _____

Not For Construction

REV	DATE	BY	SUB	APP	DESCRIPTION
0	20130710				READINESS FOR CONSTRUCTION

DESIGNED BY S. DEBNATH
DRAWN BY K. STEPANIAN
CHECKED BY E. BALLADA
IN CHARGE R. BARLAAN
DATE 20130710

LICENSED ARCHITECT SOMESH DEBNATH No. C21523 STATE OF CALIFORNIA

Skanska Shimmick Herzog
1436 California Circle
Milpitas, California 95035
A Joint Venture

Anil Verma Associates, Inc.
1970 Broadway, Suite 525, Oakland, CA 94612
Phone: (510) 835-2537 Fax: (510) 835-2339
SUBMITTED

Lockwood, Andrews & Newnam, Inc. A LEE & RUTH COMPANY
T-Y-LIN INTERNATIONAL
APPROVED

VTA BART SILICON VALLEY
BART SILICON VALLEY BERRYESSA EXTENSION

LINE, TRACK, STATIONS AND SYSTEMS
DESIGN UNIT 023
TRANSIT CENTER BUS SHELTER

BENCH AND WINDSCREEN
DETAIL PLAN ELEVATION AND SECTION

CADD FILENAME C700-S-DB-A864.dwg
SIZE D | SCALE AS NOTED
CONTRACT NO. C700 | REV. 0
AREA CODE DB | SHEET NO. A864 | PAGE NO. 0609

JosephG Jun 26, 2013 - 12:54pm G:\Current Projects\VTA-Berryessa Extension Project\Station - Milpitas\CAD\Drawings Out\13-0710 C700 Milpitas Station - RFC Submit\C700-S-DB-A864.dwg

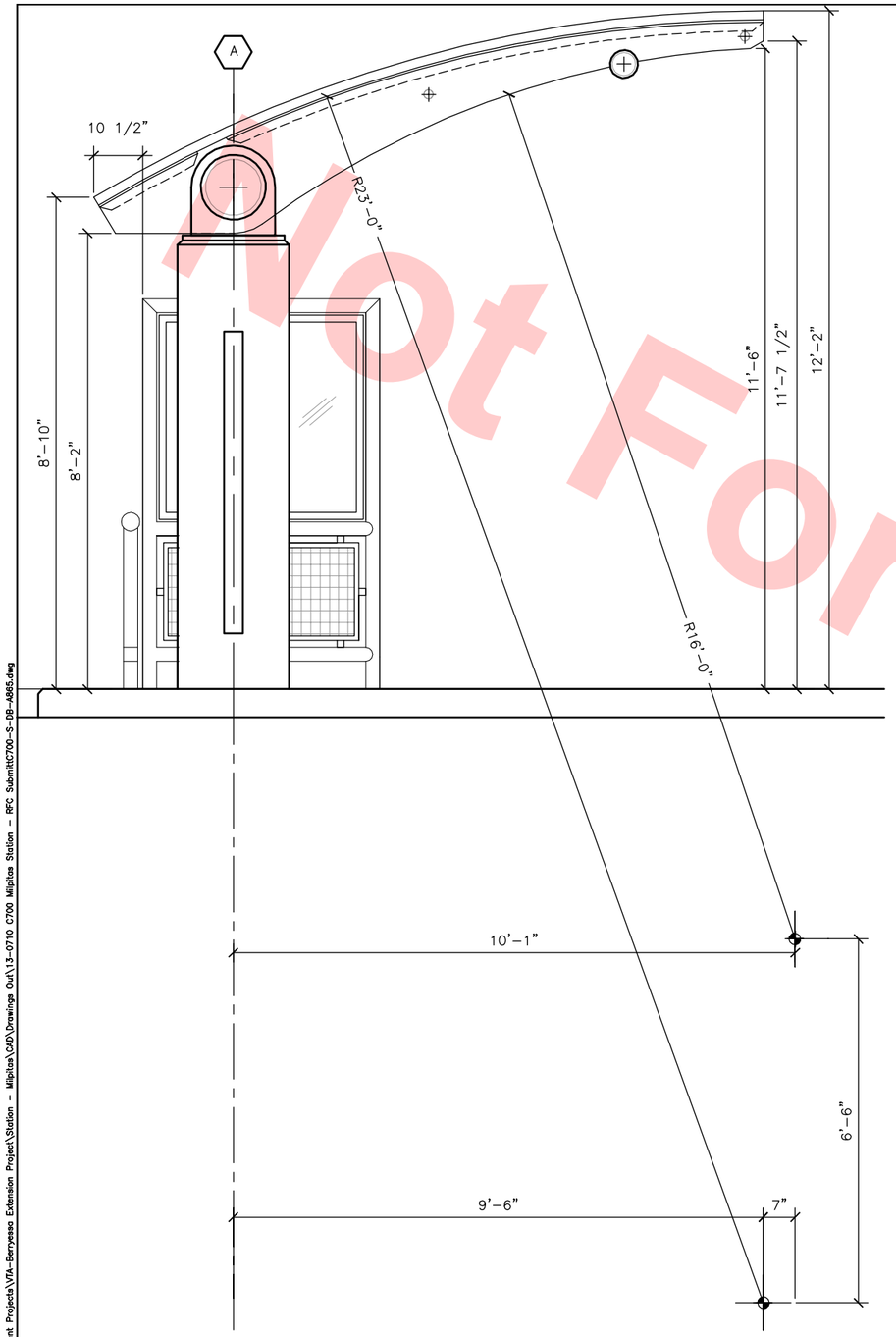

CANOPY SUPPORT PLATE FORMING DETAIL (1) DB-A865
SCALE: 3/4"=1'-0"

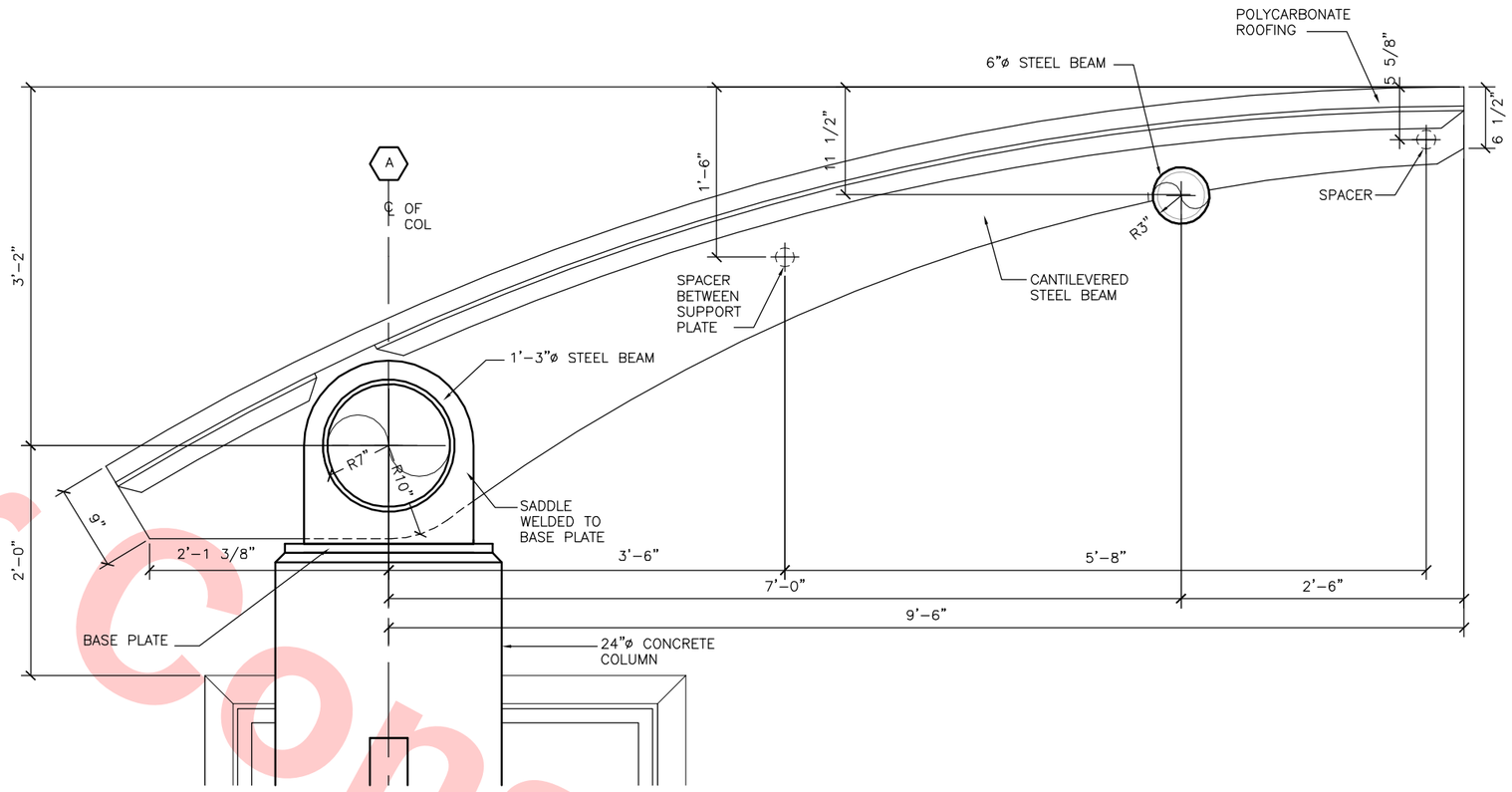

CANOPY SUPPORT PLATE DETAIL (2) DB-A865 DB-A863
SCALE: 1 1/2"=1'-0"

Santa Clara Valley Transportation Authority

____NO EXCEPTIONS TAKEN (NET)
____MAKE CORRECTIONS NOTED (MCN)
____AMEND AND RESUBMIT (A/R)

Any action shown above is subject to the terms of the contract and does not relieve the Contractor of any of its obligations under the contract, including design and detailing.

Contract No.: DB11002F

By: _____ Date: _____

Not For Construction

REV	DATE	BY	SUB	APP	DESCRIPTION
0	20130710				READINESS FOR CONSTRUCTION

DESIGNED BY S. DEBNATH
DRAWN BY K. STEPANIAN
CHECKED BY E. BALLADA
IN CHARGE R. BARLAAN
DATE 20130710

LICENSED ARCHITECT SOMESH DEBNATH No. C21523 STATE OF CALIFORNIA

Skanska Shimmick Herzog
1436 California Circle
Milpitas, California 95035
A Joint Venture

Anil Verma Associates, Inc.
1970 Broadway, Suite 535 Oakland, CA 94612
Phone: (510) 835-2537 Fax: (510) 535-2339
SUBMITTED

Lockwood, Andrews & Newnam, Inc. A LEO A DALY COMPANY
T-Y-LIN INTERNATIONAL
APPROVED

VTA BART SILICON VALLEY
BART SILICON VALLEY BERRYESSA EXTENSION

LINE, TRACK, STATIONS AND SYSTEMS DESIGN UNIT 023
TRANSIT CENTER BUS SHELTER

CANOPY SUPPORT DETAILS

CADD FILENAME C700-S-DB-A865.dwg
SIZE D | SCALE AS NOTED
CONTRACT NO. C700 | REV. 0
AREA CODE DB | SHEET NO. A865 | PAGE NO. 0610

JosephG Jun 26, 2013 - 12:55pm G:\Current Projects\VTA-Berryessa Extension Project\Station - Milpitas\CAD\Drawings Out\13-0710 C700 Milpitas Station - RFC Submit\C700-S-DB-A865.dwg

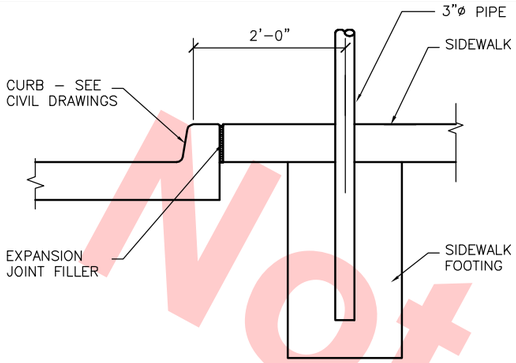

WINDSCREEN PIPE FOUNDATION & CURB DETAIL (1) DB-A871 DB-A863
SCALE: 1" = 1'-0"

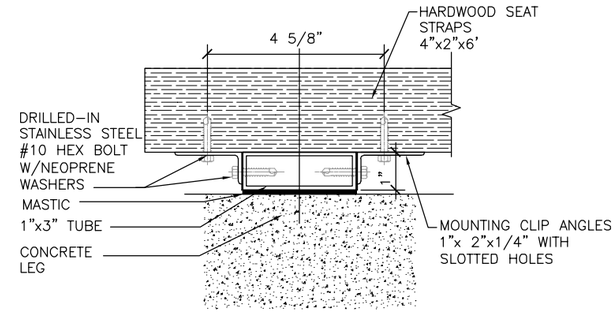

BENCH SECTION DETAIL (3) DB-A871 DB-A864
SCALE: 6" = 1'-0"

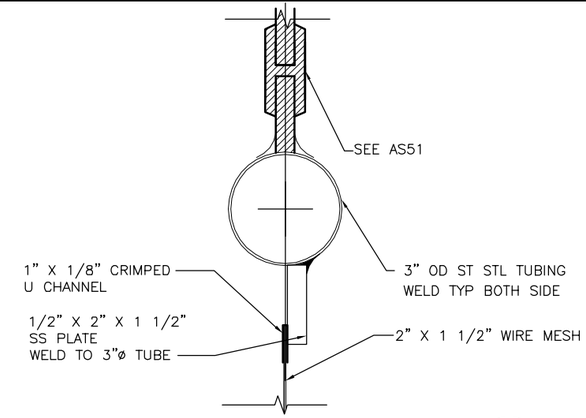

WINDSCREEN DETAIL SECTION (4) DB-A871 DB-A864
SCALE: 6" = 1'-0"

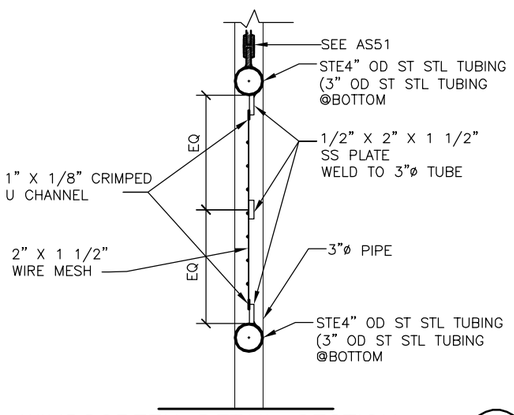

WINDSCREEN DETAIL SECTION (5) DB-A871 DB-A862
SCALE: 1 1/2" = 1'-0"

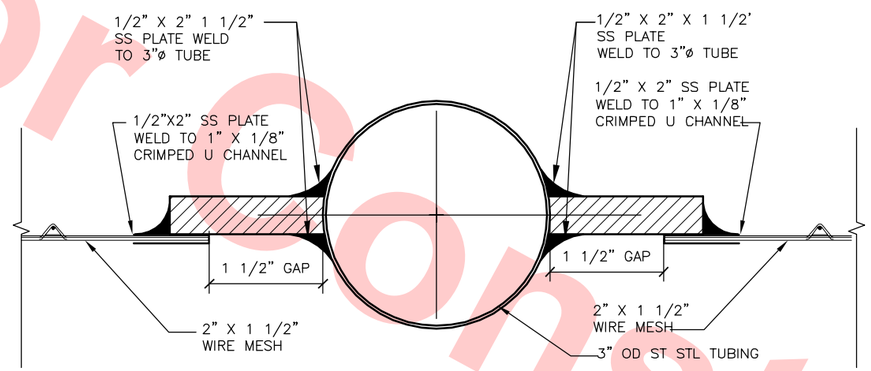

WINDSCREEN DETAIL SECTION (6) DB-A871 DB-A862
SCALE: 1' = 1'-0"

Santa Clara Valley Transportation Authority

____NO EXCEPTIONS TAKEN (NET)
____MAKE CORRECTIONS NOTED (MCN)
____AMEND AND RESUBMIT (A/R)

Any action shown above is subject to the terms of the contract and does not relieve the Contractor of any of its obligations under the contract, including design and detailing.

Contract No.: DB11002F

By: _____ Date: _____

Not For Construction

REV	DATE	BY	SUB	APP	DESCRIPTION
0	20130710				READINESS FOR CONSTRUCTION

DESIGNED BY S. DEBNATH
DRAWN BY K. STEPANIAN
CHECKED BY E. BALLADA
IN CHARGE R. BARLAAN
DATE 20130710

LICENSED ARCHITECT SOMESH DEBNATH No. C21523 STATE OF CALIFORNIA

Skanska Shimmick Herzog
1436 California Circle
Milpitas, California 95035
A Joint Venture

Anil Verma Associates, Inc.
1970 Broadway, Suite 535 Oakland, CA 94612
Phone: (510) 835-2537 Fax: (510) 835-2339

Lockwood, Andrews & Newnam, Inc. A LIN A RAY COMPANY
T·Y·LIN INTERNATIONAL

SUBMITTED _____ APPROVED _____

VTA BART SILICON VALLEY
BART SILICON VALLEY BERRYESSA EXTENSION

LINE, TRACK, STATIONS AND SYSTEMS
DESIGN UNIT 023
TRANSIT CENTER BUS SHELTER

MISCELLANEOUS DETAILS

CADD FILENAME C700-S-DB-A871.dwg
SIZE D | SCALE AS NOTED
CONTRACT NO. C700 | REV. 0
AREA CODE DB | SHEET NO. A871 | PAGE NO. 0611

JosephG Jun 26, 2013 – 12:55pm G:\Current Projects\VTA-Berryessa Extension Project\Station – Milpitas\CAD\Drawings Out\13-0710 C700 Milpitas Station – RFC Submitt\C700-S-DB-A871.dwg

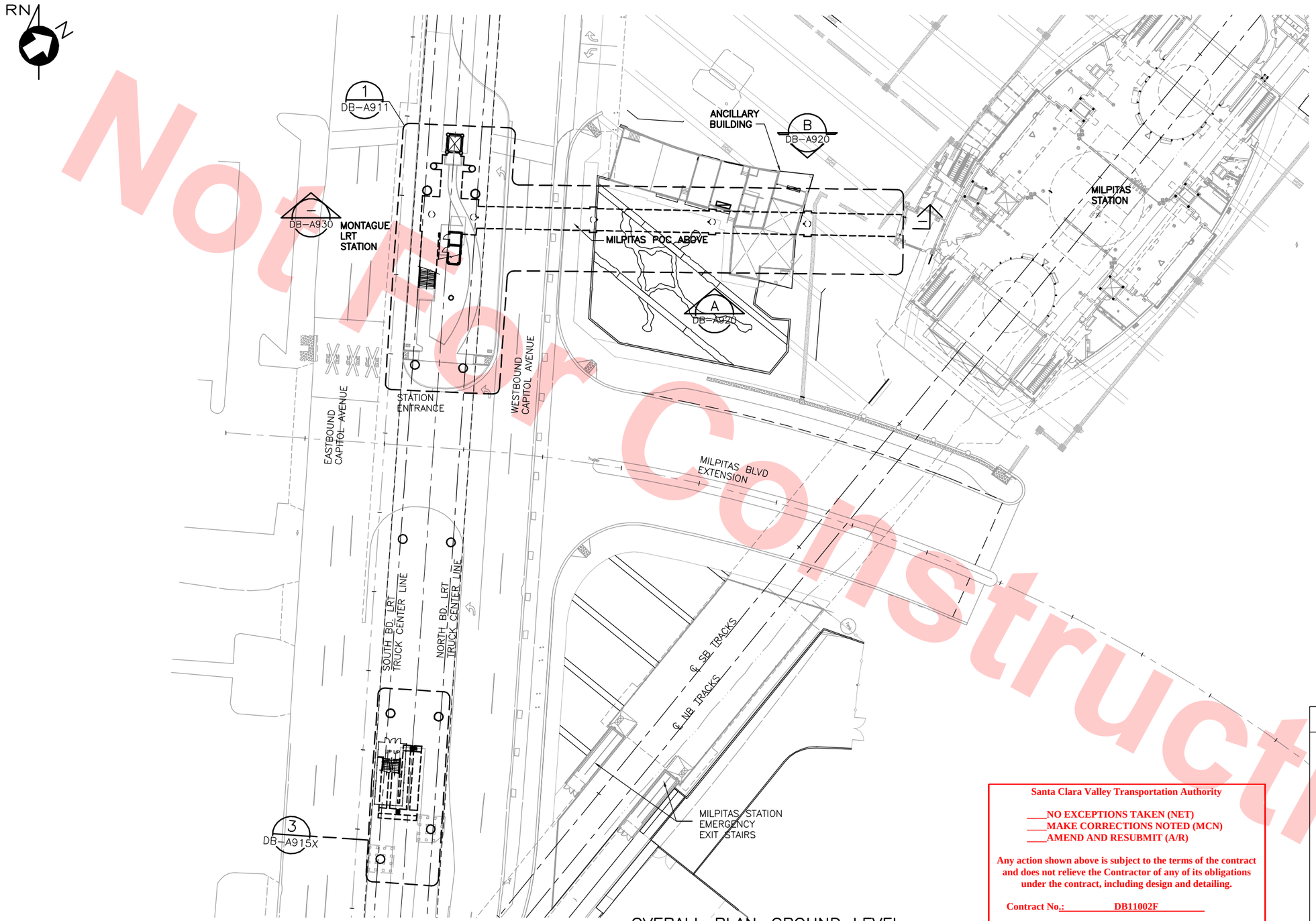

OVERALL PLAN–GROUND LEVEL

SCALE: 1/32"=1'–0"

32' 0' 32' 64'

GRAPHIC SCALE

KEY PLAN

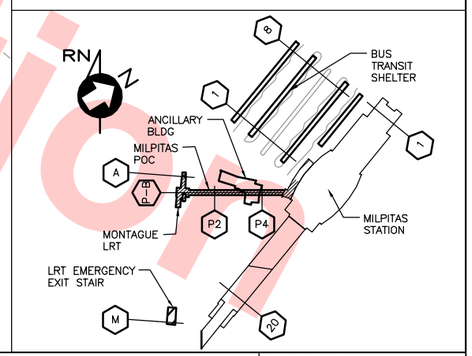

Santa Clara Valley Transportation Authority

____NO EXCEPTIONS TAKEN (NET)
____MAKE CORRECTIONS NOTED (MCN)
____AMEND AND RESUBMIT (A/R)

Any action shown above is subject to the terms of the contract and does not relieve the Contractor of any of its obligations under the contract, including design and detailing.

Contract No.: DB11002F

By: _____ Date: _____

Not For Construction

REV	DATE	BY	SUB	APP	DESCRIPTION
0	20130710				READINESS FOR CONSTRUCTION

DESIGNED BY S. SOPORI
DRAWN BY K. STEPANIAN
CHECKED BY S. DEBNATH
IN CHARGE R. BARLAAN
DATE 20130710

LICENSED ARCHITECT SOMESH DEBNATH No. C21523 STATE OF CALIFORNIA

Skanska Shimmick Herzog
1436 California Circle
Milpitas, California 95035
A Joint Venture

Anil Verma Associates, Inc.
1970 Broadway, Suite 525, Oakland, CA 94612
Phone: (510) 835-2537 Fax: (510) 835-2339
SUBMITTED

Lockwood, Andrews & Newnam, Inc. A LEO A DALY COMPANY | T·Y·LIN INTERNATIONAL
APPROVED

VTA BART SILICON VALLEY
BART SILICON VALLEY BERRYESSA EXTENSION

LINE, TRACK, STATIONS AND SYSTEMS
DESIGN UNIT 023
MONTAGUE LRT AND MILPITAS POC

OVERALL PLAN
GROUND LEVEL

CADD FILENAME C700–S–DB–A900.dwg
SIZE D | SCALE 1/32"=1'–0"
CONTRACT NO. C700 | REV. 0
AREA CODE DB | SHEET NO. A900 | PAGE NO. 0612

JosephG Jun 26, 2013 – 12:08pm G:\Current Projects\VTA–Berryessa Extension Project\Station – Milpitas\CAD\Drawings Out\13–0710 C700 MS LRT_POC – RFC Submittal\MS C700–S–DB–A900.dwg

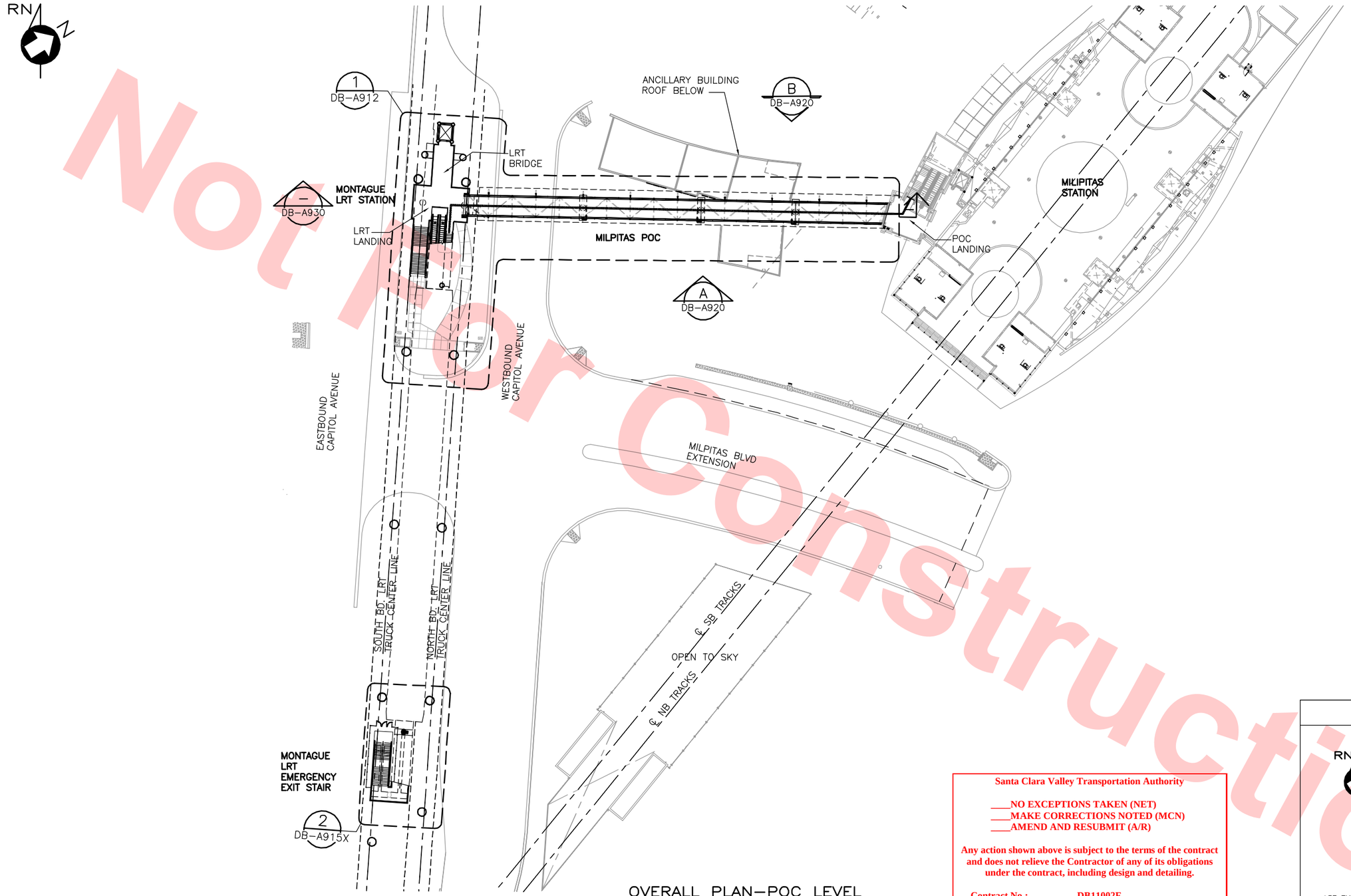

OVERALL PLAN–POC LEVEL

SCALE: 1/32"=1'–0"

32' 0' 32' 64'

GRAPHIC SCALE

KEY PLAN

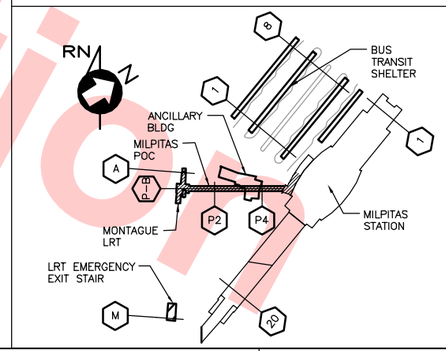

Santa Clara Valley Transportation Authority

____NO EXCEPTIONS TAKEN (NET)
____MAKE CORRECTIONS NOTED (MCN)
____AMEND AND RESUBMIT (A/R)

Any action shown above is subject to the terms of the contract and does not relieve the Contractor of any of its obligations under the contract, including design and detailing.

Contract No.: DB11002F

By: _____ **Date:** _____

Not For Construction

REV	DATE	BY	SUB	APP	DESCRIPTION
0	20130710				READINESS FOR CONSTRUCTION

DESIGNED BY S. SOPORI
DRAWN BY K. STEPANIAN
CHECKED BY S. DEBNATH
IN CHARGE R. BARLAAN
DATE 20130710

LICENSED ARCHITECT SOMESH DEBNATH No. C21523 STATE OF CALIFORNIA

Skanska Shimmick Herzog
1436 California Circle
Milpitas, California 95035
A Joint Venture

Anil Verma Associates, Inc.
1970 Broadway, Suite 525, Oakland, CA 94612
Phone: (510) 835-2537 Fax: (510) 835-2339
SUBMITTED

Lockwood, Andrews & Newnam, Inc. A LEO A DALY COMPANY
T·Y·LIN INTERNATIONAL
APPROVED

VTA BART SILICON VALLEY
BART SILICON VALLEY BERRYESSA EXTENSION

LINE, TRACK, STATIONS AND SYSTEMS
DESIGN UNIT 023
MONTAGUE LRT AND MILPITAS POC

OVERALL PLAN
POC LEVEL

CADD FILENAME C700–S–DB–A901.dwg
SIZE D | SCALE 1/32"=1'–0"
CONTRACT NO. C700 | REV. 0
AREA CODE DB | SHEET NO. A901 | PAGE NO. 0613

JosephG Jun 26, 2013 – 12:08pm G:\Current Projects\VTA–Berryessa Extension Project\Station – Milpitas\CAD\Drawings Out\13–0710 C700 MS LRT_POC – RFC Submittal\MS C700–S–DB–A901.dwg

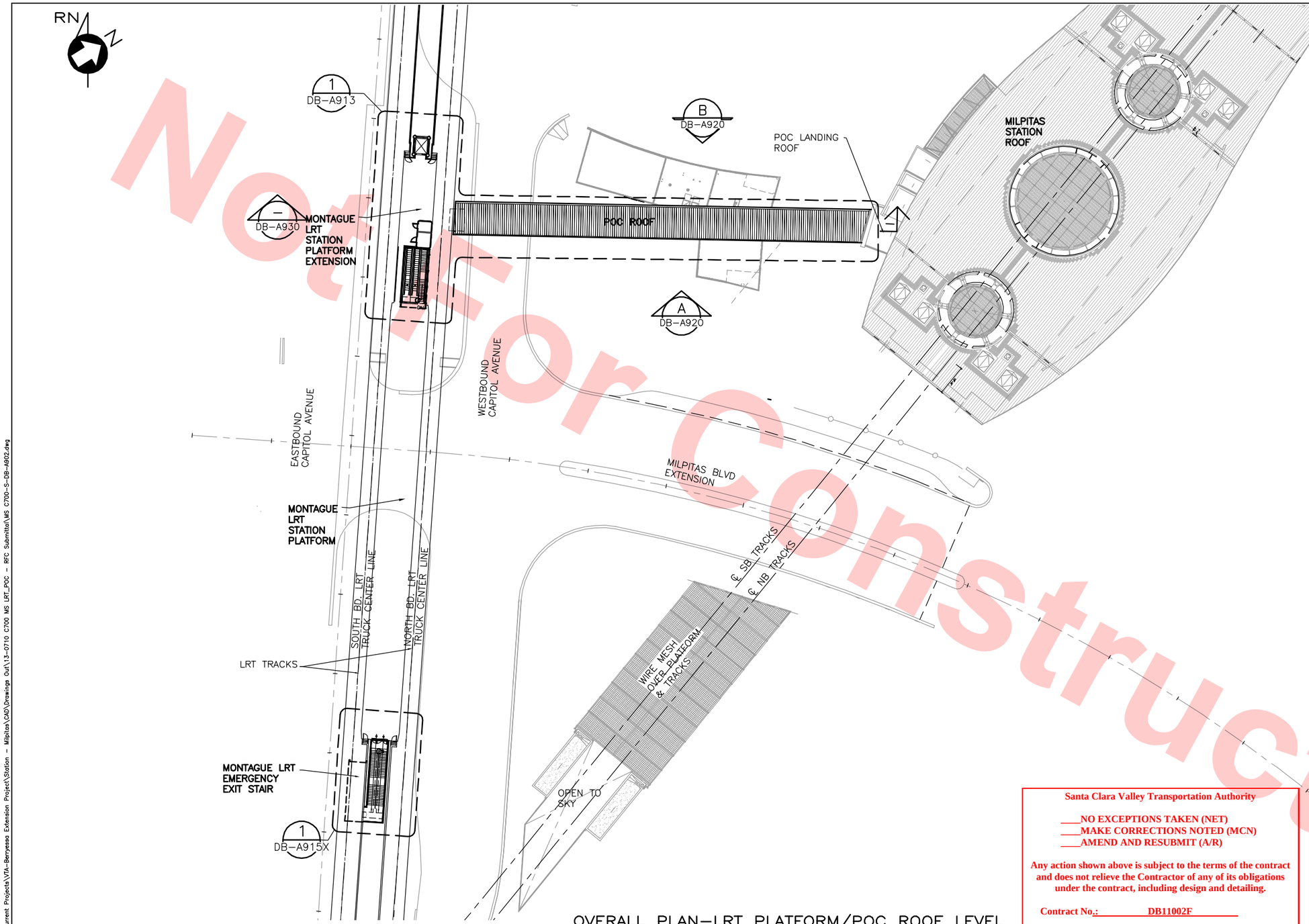

OVERALL PLAN–LRT PLATFORM/POC ROOF LEVEL

SCALE: 1/32"=1'–0"

32' 0' 32' 64'

GRAPHIC SCALE

KEY PLAN

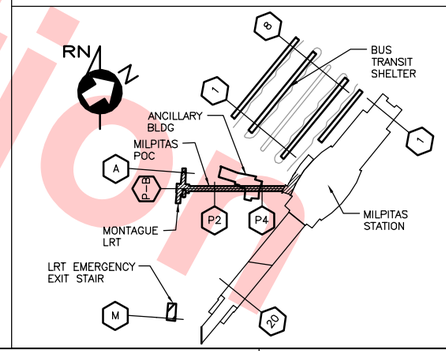

Santa Clara Valley Transportation Authority

____NO EXCEPTIONS TAKEN (NET)
____MAKE CORRECTIONS NOTED (MCN)
____AMEND AND RESUBMIT (A/R)

Any action shown above is subject to the terms of the contract and does not relieve the Contractor of any of its obligations under the contract, including design and detailing.

Contract No.: DB11002F

By: _____ **Date:** _____

Not For Construction

REV	DATE	BY	SUB	APP	DESCRIPTION
0	20130710				READINESS FOR CONSTRUCTION

DESIGNED BY S. SOPORI
DRAWN BY K. STEPANIAN
CHECKED BY S. DEBNATH
IN CHARGE R. BARLAAN
DATE 20130710

LICENSED ARCHITECT SOMESH DEBNATH No. C21523 STATE OF CALIFORNIA

Skanska Shimmick Herzog
1436 California Circle
Milpitas, California 95035
A Joint Venture

Anil Verma Associates, Inc.
1970 Broadway, Suite 525, Oakland, CA 94612
Phone: (510) 835-2537 Fax: (510) 835-2339
SUBMITTED

Lockwood, Andrews & Newnam, Inc. A LEO A DALY COMPANY
T·Y·LIN INTERNATIONAL
APPROVED

VTA BART SILICON VALLEY
BART SILICON VALLEY BERRYESSA EXTENSION

LINE, TRACK, STATIONS AND SYSTEMS DESIGN UNIT 023
MONTAGUE LRT AND MILPITAS POC

OVERALL PLAN
LRT PLATFORM/POC ROOF LEVEL PLAN

CADD FILENAME C700–S–DB–A902.dwg
SIZE D | SCALE 1/32"=1'–0"
CONTRACT NO. C700 | REV. 0
AREA CODE DB | SHEET NO. A902 | PAGE NO. 0614

Jun 26, 2013 – 12:08pm G:\Current Projects\VTA–Berryessa Extension Project\Station – Milpitas\CAD\Drawings Out\13–0710 C700 MS LRT_POC – RFC Submittal\MS C700–S–DB–A902.dwg
JosephG

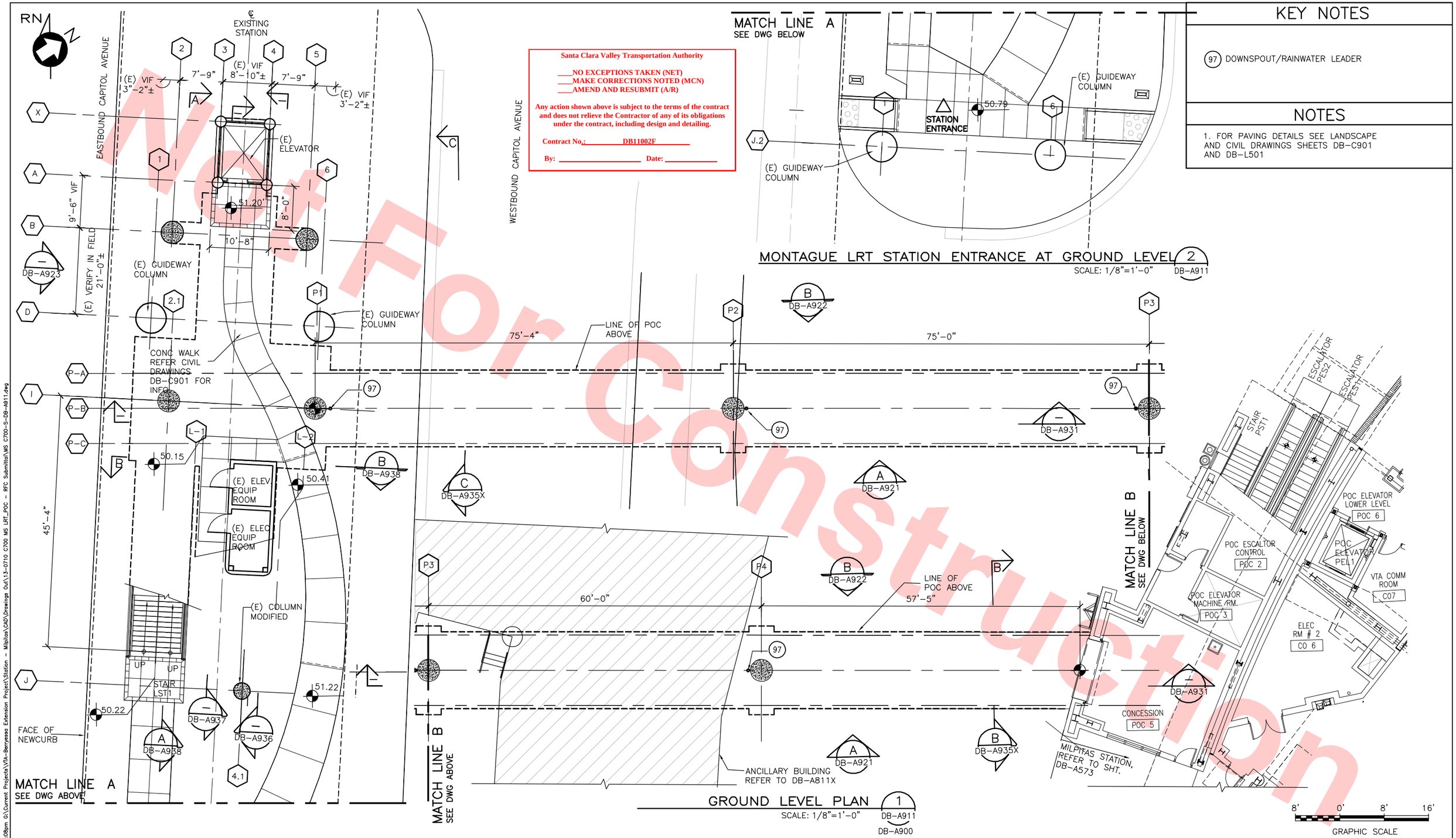

Santa Clara Valley Transportation Authority

____NO EXCEPTIONS TAKEN (NET)
____MAKE CORRECTIONS NOTED (MCN)
____AMEND AND RESUBMIT (A/R)

Any action shown above is subject to the terms of the contract and does not relieve the Contractor of any of its obligations under the contract, including design and detailing.

Contract No.: DB11002F

By: _____ Date: _____

Not For Construction

KEY NOTES

(97) DOWNSPOUT/RAINWATER LEADER

NOTES

1. FOR PAVING DETAILS SEE LANDSCAPE AND CIVIL DRAWINGS SHEETS DB-C901 AND DB-L501

REV	DATE	BY	SUB	APP	DESCRIPTION
0	20130710				READINESS FOR CONSTRUCTION

DESIGNED BY S. SOPORI
DRAWN BY K. STEPANIAN
CHECKED BY S. DEBNATH
IN CHARGE R. BARLAAN
DATE 20130710

LICENSED ARCHITECT SOMESH DEBNATH No. C21523 STATE OF CALIFORNIA

Skanska Shimmick Herzog
1436 California Circle Milpitas, California 95035
A Joint Venture

Anil Verma Associates, Inc.
1970 Broadway, Suite 525 Oakland, CA 94612
Phone: (510) 835-2537 Fax: (510) 835-2339

Lockwood, Andrews & Newnam, Inc. A LEO A DALY COMPANY

T-Y-LIN INTERNATIONAL

SUBMITTED _____ APPROVED _____

VTA BART SILICON VALLEY

BART SILICON VALLEY BERRYESSA EXTENSION

LINE, TRACK, STATIONS AND SYSTEMS DESIGN UNIT 023
MONTAGUE LRT AND MILPITAS POC

GROUND LEVEL PLAN

CADD FILENAME C700-S-DB-A911.dwg
SIZE D | SCALE 1/8"=1'-0"
CONTRACT NO. C700 | REV. 0
AREA CODE DB | SHEET NO. A911 | PAGE NO. 0615

JosephG Jun 26, 2013 - 12:08pm G:\Current Projects\VTA-Berryessa Extension Project\Station - Milpitas\CAD\Drawings Out\13-0710 C700 MS LRT_POC - RFC Submittal\MS C700-S-DB-A911.dwg

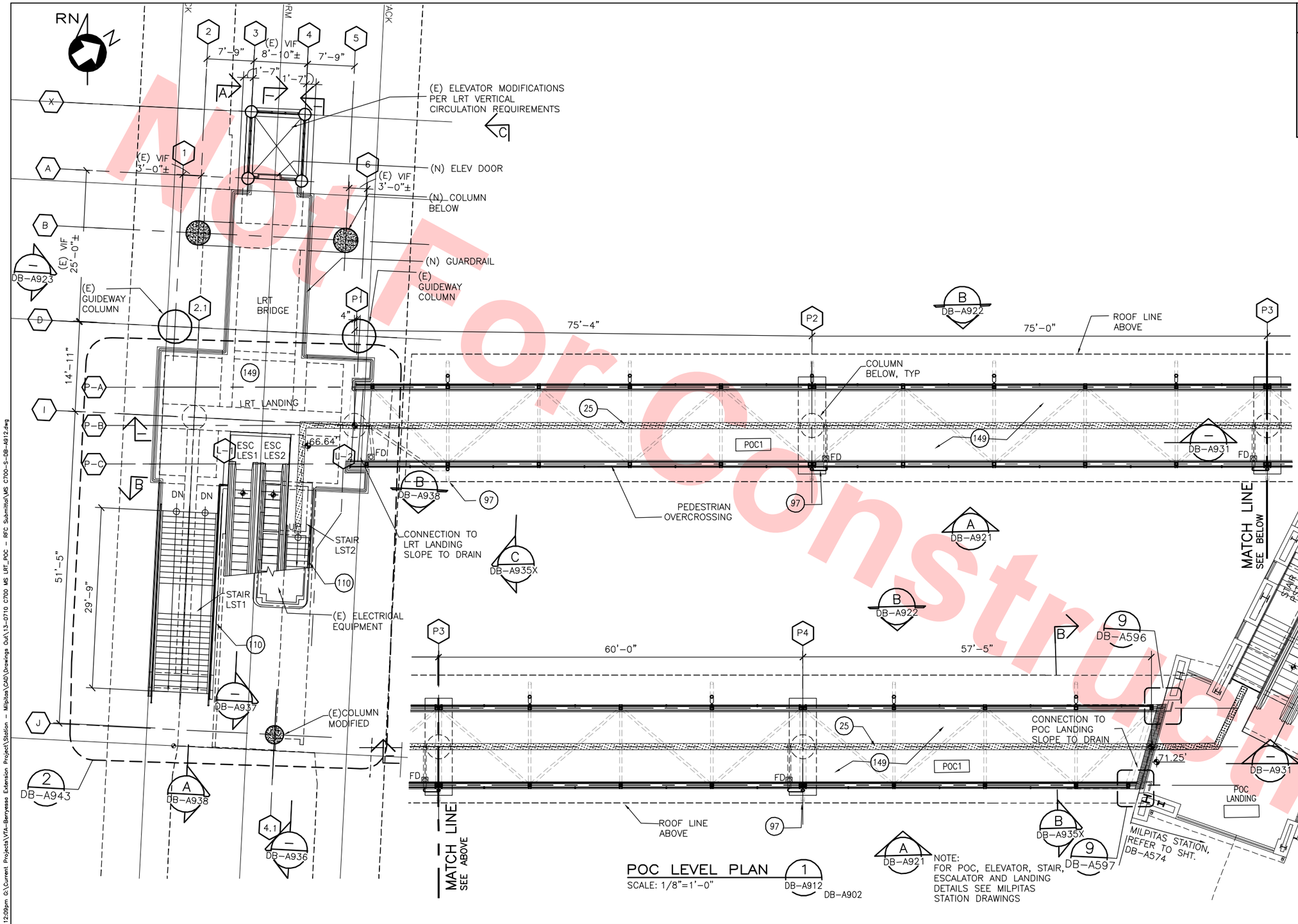

POC LEVEL PLAN (1)
SCALE: 1/8"=1'-0"

NOTE:
FOR POC, ELEVATOR, STAIR, ESCALATOR AND LANDING DETAILS SEE MILPITAS STATION DRAWINGS

KEY NOTES

- (25) TACTILE GUIDE STRIP
- (97) DOWNSPOUT/RAINWATER LEADER
- (110) HANDRAIL MOUNTED LED LIGHT FIXTURE TYPE M26,
- (149) CONCRETE TOPPING

Santa Clara Valley Transportation Authority

____NO EXCEPTIONS TAKEN (NET)
____MAKE CORRECTIONS NOTED (MCN)
____AMEND AND RESUBMIT (A/R)

Any action shown above is subject to the terms of the contract and does not relieve the Contractor of any of its obligations under the contract, including design and detailing.

Contract No.: DB11002F

By: _____ **Date:** _____

Not For Construction

REV	DATE	BY	SUB	APP	DESCRIPTION
0	20130710				READINESS FOR CONSTRUCTION

DESIGNED BY S. SOPORI
DRAWN BY K. STEPANIAN
CHECKED BY S. DEBNATH
IN CHARGE R. BARLAAN
DATE 20130710

LICENSED ARCHITECT — SANJESH DEBNATH — No. C21523 — STATE OF CALIFORNIA

Skanska Shimmick Herzog
1436 California Circle
Milpitas, California 95035
A Joint Venture

Anil Verma Associates, Inc.
1970 Broadway, Suite 525, Oakland, CA 94612
Phone: (510) 835-2537 Fax: (510) 835-2339

Lockwood, Andrews & Newnam, Inc. — A LED A DALY COMPANY

T·Y·LIN INTERNATIONAL

SUBMITTED _____ APPROVED _____

VTA BART SILICON VALLEY
BART SILICON VALLEY BERRYESSA EXTENSION

LINE, TRACK, STATIONS AND SYSTEMS DESIGN UNIT 023
MONTAGUE LRT AND MILPITAS POC

POC LEVEL PLAN

CADD FILENAME C700-S-DB-A912.dwg
SIZE D | SCALE 1/8"=1'-0"
CONTRACT NO. C700 | REV. 0
AREA CODE DB | SHEET NO. A912 | PAGE NO. 0616

JosephG Jun 26, 2013 – 12:09pm G:\Current Projects\VTA-Berryessa Extension Project\Station – Milpitas\CAD\Drawings Out\13-0710 C700 MS LRT_POC – RFC Submittal\MS C700-S-DB-A912.dwg

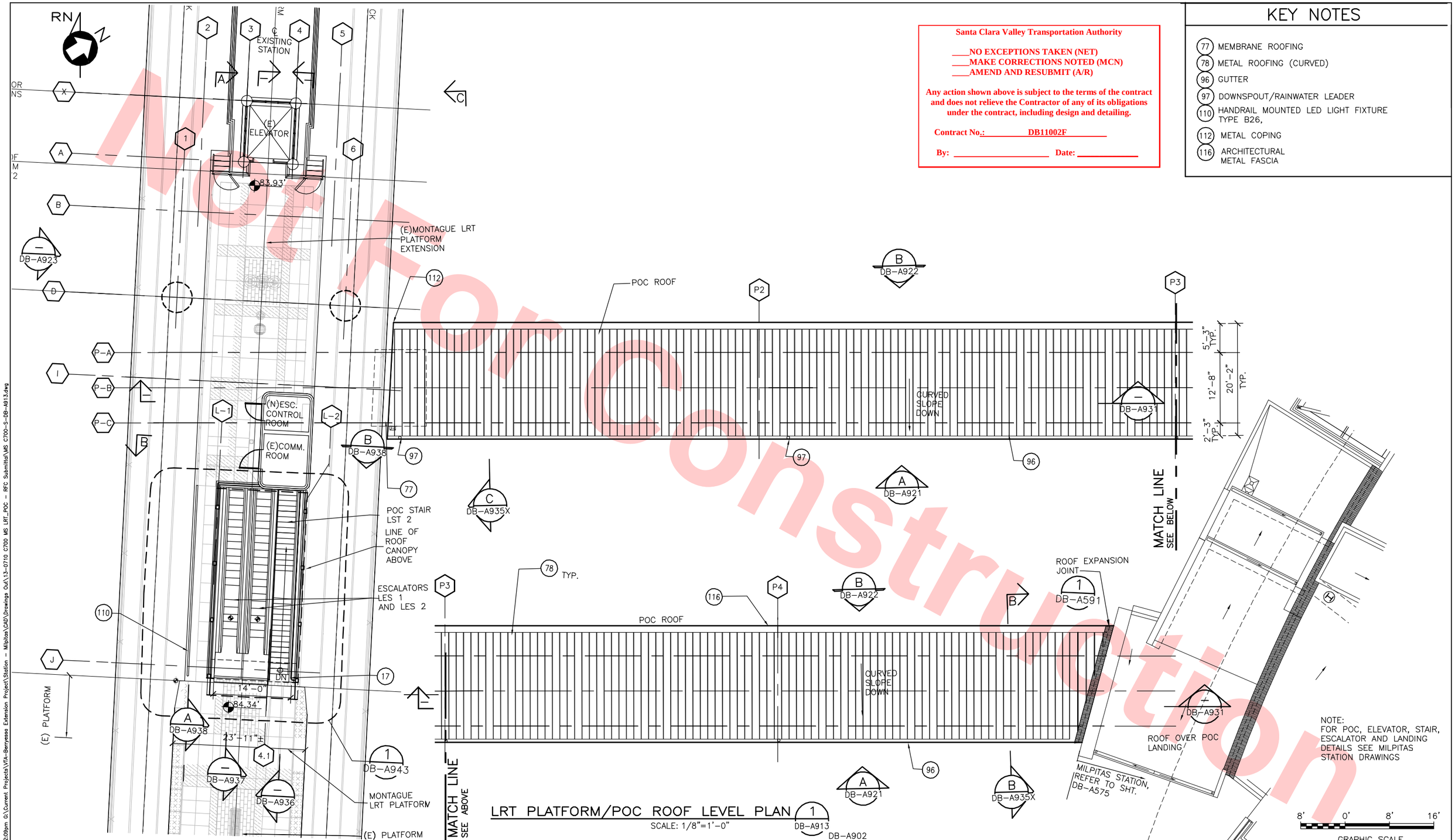

LRT PLATFORM/POC ROOF LEVEL PLAN 1 DB-A913
SCALE: 1/8"=1'-0"
DB-A902

Santa Clara Valley Transportation Authority

____NO EXCEPTIONS TAKEN (NET)
____MAKE CORRECTIONS NOTED (MCN)
____AMEND AND RESUBMIT (A/R)

Any action shown above is subject to the terms of the contract and does not relieve the Contractor of any of its obligations under the contract, including design and detailing.

Contract No.: DB11002F

By: _____ Date: _____

KEY NOTES

- 77 MEMBRANE ROOFING
- 78 METAL ROOFING (CURVED)
- 96 GUTTER
- 97 DOWNSPOUT/RAINWATER LEADER
- 110 HANDRAIL MOUNTED LED LIGHT FIXTURE TYPE B26,
- 112 METAL COPING
- 116 ARCHITECTURAL METAL FASCIA

Not For Construction

REV	DATE	BY	SUB	APP	DESCRIPTION
0	20130710				READINESS FOR CONSTRUCTION

DESIGNED BY S. SOPORI
DRAWN BY K. STEPANIAN
CHECKED BY S. DEBNATH
IN CHARGE R. BARLAAN
DATE 20130710

LICENSED ARCHITECT Suresh Debnath No. C21523 STATE OF CALIFORNIA

Skanska Shimmick Herzog
1436 California Circle
Milpitas, California 95035
A Joint Venture

Anil Verma Associates, Inc.
1970 Broadway, Suite 525, Oakland, CA 94612
Phone: (510) 835-2337 Fax: (510) 835-2339

Lockwood, Andrews & Newnam, Inc. A LEO A DALY COMPANY

T·Y·LIN INTERNATIONAL

SUBMITTED _____ APPROVED _____

VTA BART SILICON VALLEY

BART SILICON VALLEY BERRYESSA EXTENSION

LINE, TRACK, STATIONS AND SYSTEMS DESIGN UNIT 023
MONTAGUE LRT AND MILPITAS POC

LRT PLATFORM/POC ROOF LEVEL PLAN

CADD FILENAME C700-S-DB-A913.dwg
SIZE D | SCALE 1/8"=1'-0"
CONTRACT NO. C700 | REV. 0
AREA CODE DB | SHEET NO. A913 | PAGE NO. 0617

JosephC Jun 26, 2013 - 12:09pm G:\Current Projects\VTA-Berryessa Extension Project\Station - Milpitas\CAD\Drawings Out\13-0710 C700 MS LRT_POC - RFC Submittal\MS C700-S-DB-A913.dwg

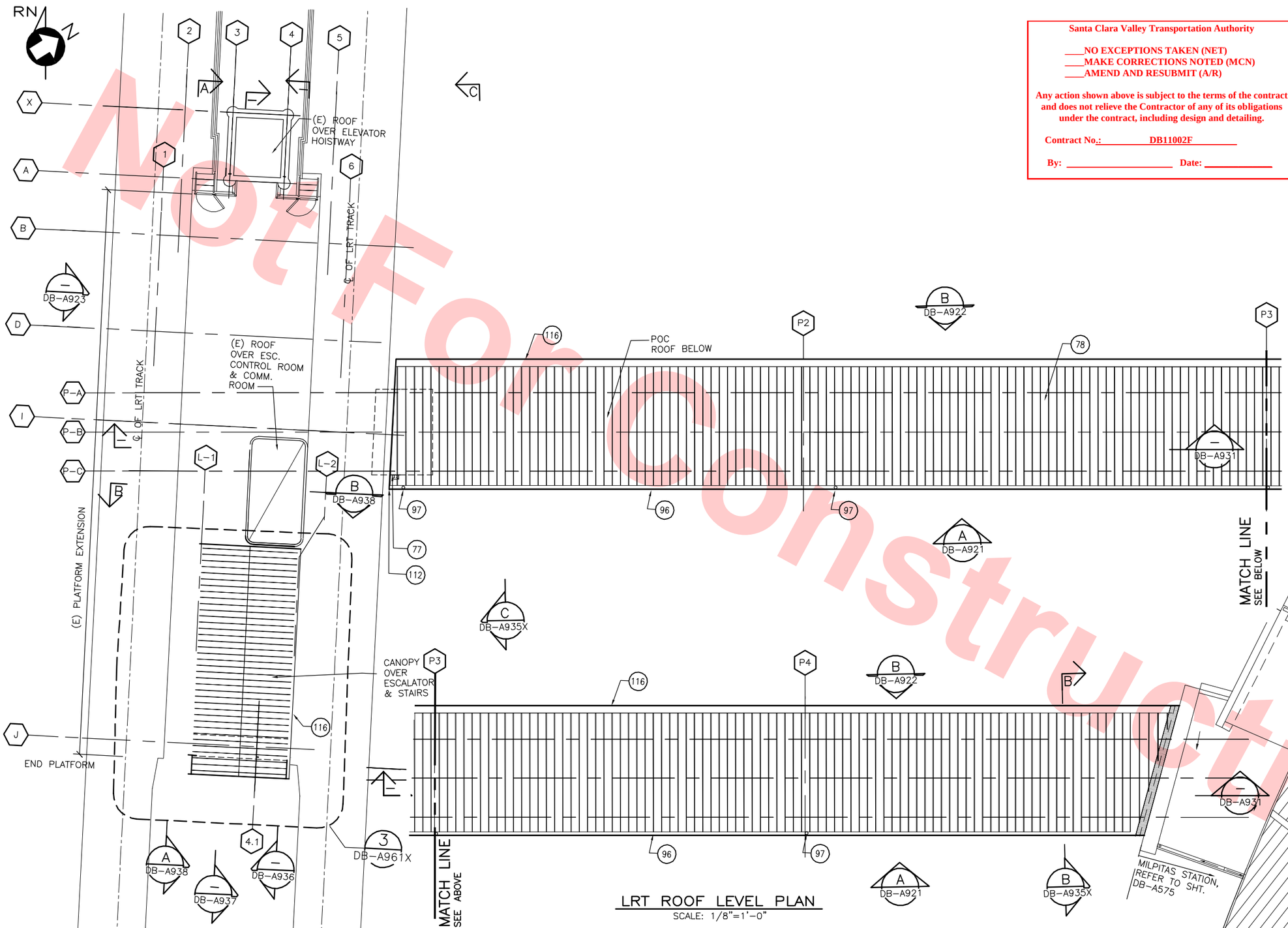

LRT ROOF LEVEL PLAN
SCALE: 1/8"=1'-0"

Not For Construction

Santa Clara Valley Transportation Authority

____NO EXCEPTIONS TAKEN (NET)
____MAKE CORRECTIONS NOTED (MCN)
____AMEND AND RESUBMIT (A/R)

Any action shown above is subject to the terms of the contract and does not relieve the Contractor of any of its obligations under the contract, including design and detailing.

Contract No.: DB11002F

By: _____ Date: _____

KEY NOTES

- 77 MEMBRANE ROOFING. SEE DET 11/ DB-A990
- 78 METAL ROOFING (CURVED)
- 96 GUTTER
- 97 DOWNSPOUT/RAINWATER LEADER
- 112 METAL COPING
- 116 ARCHITECTURAL METAL FASCIA

NOTE:
FOR POC, ELEVATOR, STAIR, ESCALATOR AND LANDING DETAILS SEE MILPITAS STATION DRAWINGS

8' 0' 8' 16'
GRAPHIC SCALE

REV	DATE	BY	SUB	APP	DESCRIPTION
	20130710				READINESS FOR CONSTRUCTION

DESIGNED BY S. SOPORI
DRAWN BY K. STEPANIAN
CHECKED BY S. DEBNATH
IN CHARGE R. BARLAAN
DATE 20130710

LICENSED ARCHITECT DINESH DEBNATH No. C21523 STATE OF CALIFORNIA

Skanska Shimmick Herzog
1436 California Circle
Milpitas, California 95035
A Joint Venture

Anil Verma Associates, Inc.
1970 Broadway, Suite 555, Oakland, CA 94612
Phone: (510) 835-2337 Fax: (510) 835-2339

SUBMITTED

Lockwood, Andrews & Newnam, Inc. A LEO A DALY COMPANY
T·Y·LIN INTERNATIONAL

APPROVED

VTA BART SILICON VALLEY
BART SILICON VALLEY BERRYESSA EXTENSION

LINE, TRACK, STATIONS AND SYSTEMS
DESIGN UNIT 023
MONTAGUE LRT AND MILPITAS POC

LRT ROOF LEVEL PLAN

CADD FILENAME C700-S-DB-A914X.dwg
SIZE D | SCALE 1/8"=1'-0"
CONTRACT NO. C700 | REV. 0
AREA CODE DB | SHEET NO. A914X | PAGE NO. 0618

JosephG Jun 26, 2013 - 12:09pm G:\Current Projects\VTA-Berryessa Extension Project\Station - Milpitas\CAD\Drawings Out\13-0710 C700 MS LRT_POC - RFC Submittal\MS C700-S-DB-A914X.dwg

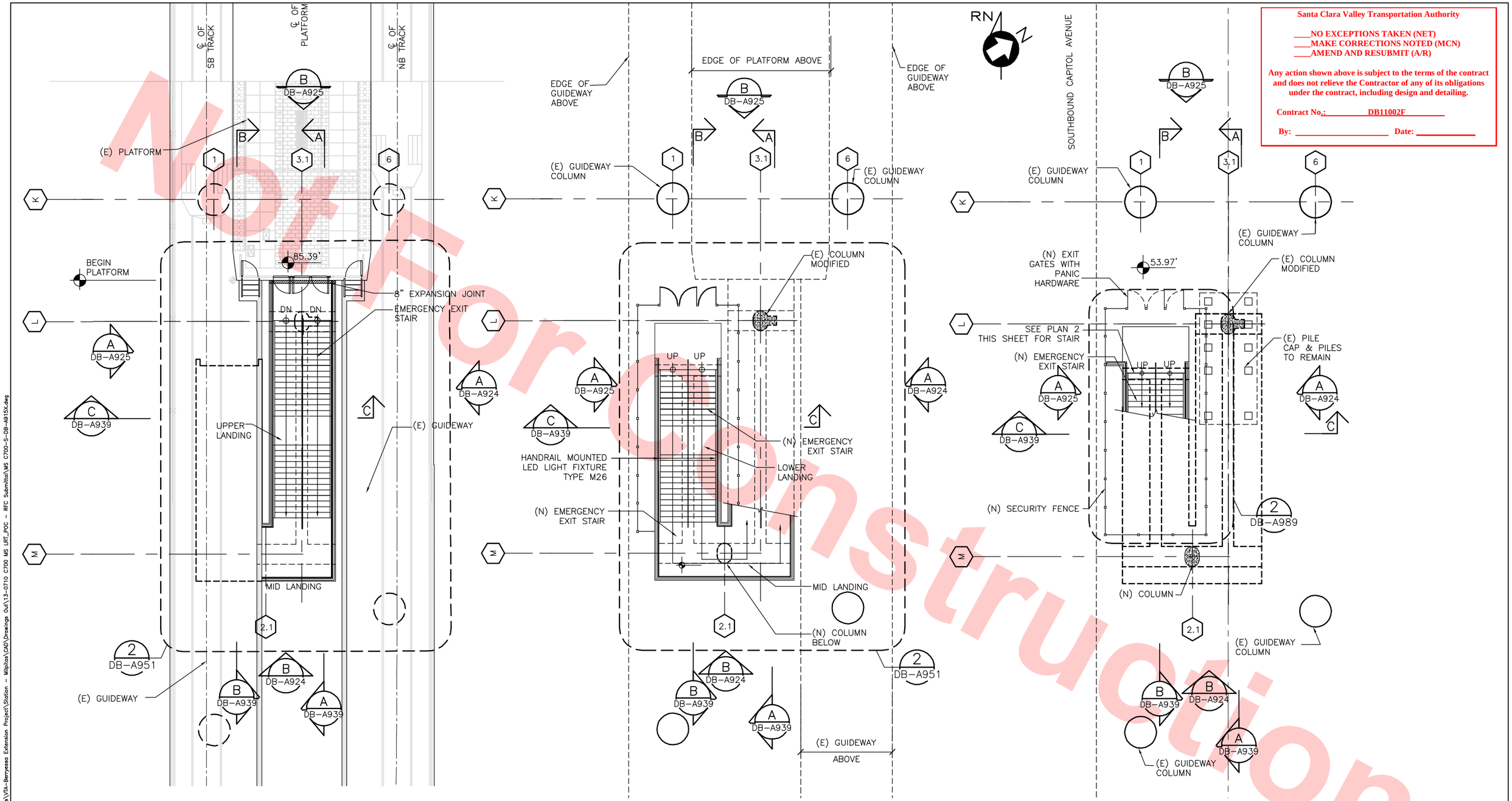

PLAN AT LRT PLATFORM LEVEL 1 (DB-A915X / DB-A902)
SCALE: 1/8"=1'-0"

PLAN AT MID LANDING 2 (DB-A915X / DB-A901)
SCALE: 1/8"=1'-0"

PLAN AT GROUND LEVEL 3 (DB-A915X / DB-A900)
SCALE: 1/8"=1'-0"

8' 0' 8' 16'
GRAPHIC SCALE

Santa Clara Valley Transportation Authority

____NO EXCEPTIONS TAKEN (NET)
____MAKE CORRECTIONS NOTED (MCN)
____AMEND AND RESUBMIT (A/R)

Any action shown above is subject to the terms of the contract and does not relieve the Contractor of any of its obligations under the contract, including design and detailing.

Contract No.: DB11002F

By: _____ Date: _____

Not For Construction

REV	DATE	BY	SUB	APP	DESCRIPTION
0	20130710				READINESS FOR CONSTRUCTION

DESIGNED BY S. SOPORI
DRAWN BY K. STEPANIAN
CHECKED BY S. DEBNATH
IN CHARGE R. BARLAAN
DATE 20130710

LICENSED ARCHITECT SANJEEV DEBNATH No. C21523 STATE OF CALIFORNIA

Skanska Shimmick Herzog
1436 California Circle
Milpitas, California 95035
A Joint Venture

Anil Verma Associates, Inc.
1970 Broadway, Suite 525, Oakland, CA 94612
Phone: (510) 835-2537 Fax: (510) 835-2339

Lockwood, Andrews & Newnam, Inc. A LEO A DALY COMPANY
T·Y·LIN INTERNATIONAL

SUBMITTED _____
APPROVED _____

VTA BART SILICON VALLEY
BART SILICON VALLEY BERRYESSA EXTENSION

LINE, TRACK, STATIONS AND SYSTEMS DESIGN UNIT 023
MONTAGUE LRT AND MILPITAS POC

LRT EMERGENCY EXIT STAIRS
PLANS

CADD FILENAME C700-S-DB-A915X.dwg
SIZE D | SCALE 1/8"=1'-0"
CONTRACT NO. C700 | REV. 0
AREA CODE DB | SHEET NO. A915X | PAGE NO. 0619

Jun 26, 2013 – 12:10pm G:\Current Projects\VTA-Berryessa Extension Project\Station – Milpitas\CAD\Drawings Out\13-0710 C700 MS LRT_POC – RFC Submittal\MS C700-S-DB-A915X.dwg
JosephG

Santa Clara Valley Transportation Authority

____NO EXCEPTIONS TAKEN (NET)
____MAKE CORRECTIONS NOTED (MCN)
____AMEND AND RESUBMIT (A/R)

Any action shown above is subject to the terms of the contract and does not relieve the Contractor of any of its obligations under the contract, including design and detailing.

Contract No.: DB11002F

By: _____ Date: _____

KEY NOTES

- (31) STRUCTURAL MEMBER
- (74) EXPOSED METAL DECK
- (97) DOWNSPOUT/RAINWATER LEADER
- (157) LIGHT FIXTURE

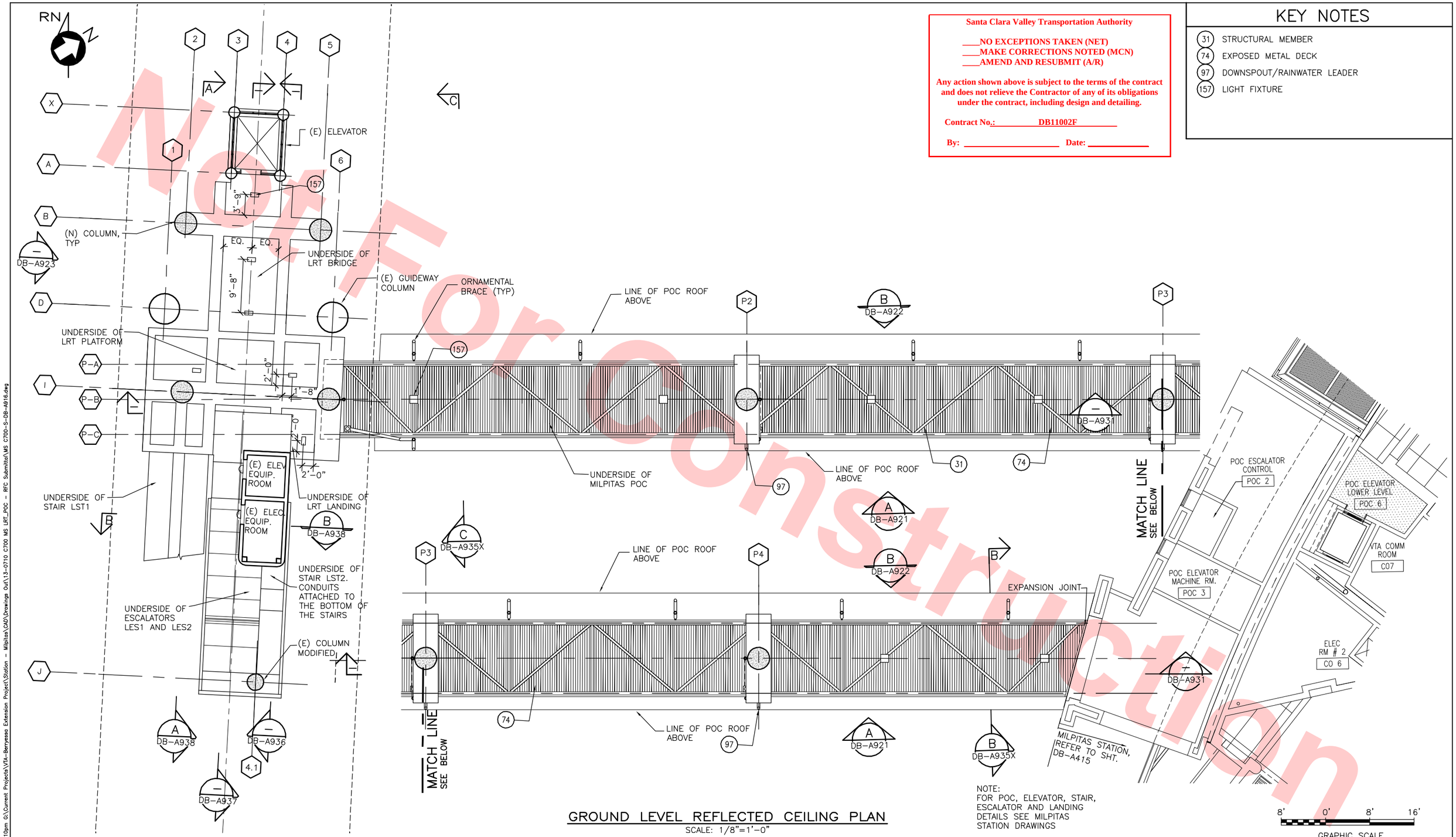

NOTE:
FOR POC, ELEVATOR, STAIR, ESCALATOR AND LANDING DETAILS SEE MILPITAS STATION DRAWINGS

GROUND LEVEL REFLECTED CEILING PLAN

SCALE: 1/8"=1'-0"

Not For Construction

REV	DATE	BY	SUB	APP	DESCRIPTION
0	20130710				READINESS FOR CONSTRUCTION

DESIGNED BY S. SOPORI
DRAWN BY K. STEPANIAN
CHECKED BY S. DEBNATH
IN CHARGE R. BARLAAN
DATE 20130710

LICENSED ARCHITECT SOMESH DEBNATH No. C21523 STATE OF CALIFORNIA

Skanska Shimmick Herzog
1436 California Circle
Milpitas, California 95035
A Joint Venture

Anil Verma Associates, Inc.
1970 Broadway, Suite 225
Oakland, CA 94612
Phone: (510) 835-2537 Fax: (510) 835-2339

Lockwood, Andrews & Newnam, Inc. A LAN & BALY COMPANY

T·Y·LIN INTERNATIONAL

SUBMITTED

APPROVED

VTA BART SILICON VALLEY

BART SILICON VALLEY BERRYESSA EXTENSION

LINE, TRACK, STATIONS AND SYSTEMS DESIGN UNIT 023
MONTAGUE LRT AND MILPITAS POC

GROUND LEVEL REFLECTED CEILING PLAN

CADD FILENAME C700-S-DB-A916.dwg
SIZE D | SCALE 1/8"=1'-0"
CONTRACT NO. C700 | REV. 0
AREA CODE DB | SHEET NO. A916 | PAGE NO. 0620

JosephG Jun 26, 2013 – 12:10pm G:\Current Projects\VTA-Berryessa Extension Project\Station – Milpitas\CAD\Drawings Out\13-0710 C700 MS LRT_POC – RFC Submittal\MS C700-S-DB-A916.dwg

Santa Clara Valley Transportation Authority

____NO EXCEPTIONS TAKEN (NET)
____MAKE CORRECTIONS NOTED (MCN)
____AMEND AND RESUBMIT (A/R)

Any action shown above is subject to the terms of the contract and does not relieve the Contractor of any of its obligations under the contract, including design and detailing.

Contract No.: DB11002F

By: _____ Date: _____

KEY NOTES

15	LIGHT FIXTURE
31	STRUCTURAL MEMBER
74	EXPOSED METAL DECK
96	GUTTER
97	DOWNSPOUT/RAINWATER LEADER
146	DECORATIVE STAINLESS STEEL MESH
158	METAL VALANCE

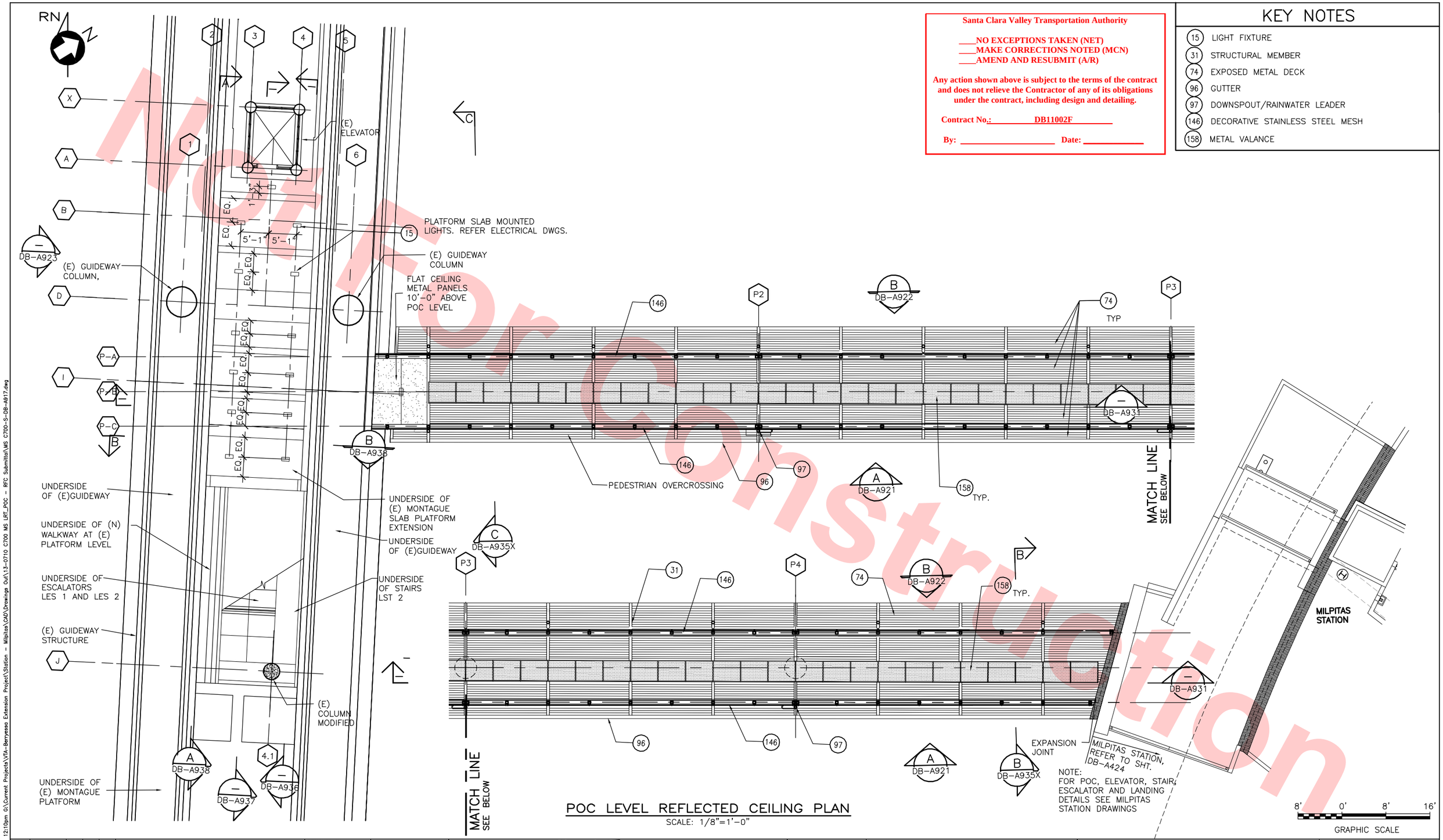

POC LEVEL REFLECTED CEILING PLAN
SCALE: 1/8"=1'-0"

Not For Construction

REV	DATE	BY	SUB	APP	DESCRIPTION
0	20130710				READINESS FOR CONSTRUCTION

DESIGNED BY S. SOPORI
DRAWN BY K. STEPANIAN
CHECKED BY S. DEBNATH
IN CHARGE R. BARLAAN
DATE 20130710

LICENSED ARCHITECT SOMESH DEBNATH No. C21523 STATE OF CALIFORNIA

Skanska Shimmick Herzog
1436 California Circle
Milpitas, California 95035
A Joint Venture

Anil Verma Associates, Inc.
1970 Broadway, Suite 535 Oakland, CA 94612
Phone: (510) 835-2537 Fax: (510) 835-2339

Lockwood, Andrews & Newnam, Inc. A CH2M HILL COMPANY

T·Y·LIN INTERNATIONAL

SUBMITTED _____ APPROVED _____

VTA BART SILICON VALLEY
BART SILICON VALLEY BERRYESSA EXTENSION

LINE, TRACK, STATIONS AND SYSTEMS
DESIGN UNIT 023
MONTAGUE LRT & MILPITAS POC
POC LEVEL
REFLECTED CEILING PLAN

CADD FILENAME C700-S-DB-A917.dwg
SIZE D | SCALE 1/8"=1'-0"
CONTRACT NO. C700 | REV. 0
AREA CODE DB | SHEET NO. A917 | PAGE NO. 0621

JosephG Jun 26, 2013 – 12:10pm G:\Current Projects\VTA-Berryessa Extension Project\Station – Milpitas\CAD\Drawings Out\13-0710 C700 MS LRT_POC – RFC Submittal\MS C700-S-DB-A917.dwg

Santa Clara Valley Transportation Authority

____NO EXCEPTIONS TAKEN (NET)
____MAKE CORRECTIONS NOTED (MCN)
____AMEND AND RESUBMIT (A/R)

Any action shown above is subject to the terms of the contract and does not relieve the Contractor of any of its obligations under the contract, including design and detailing.

Contract No.: DB11002F

By: _____ Date: _____

Not For Construction

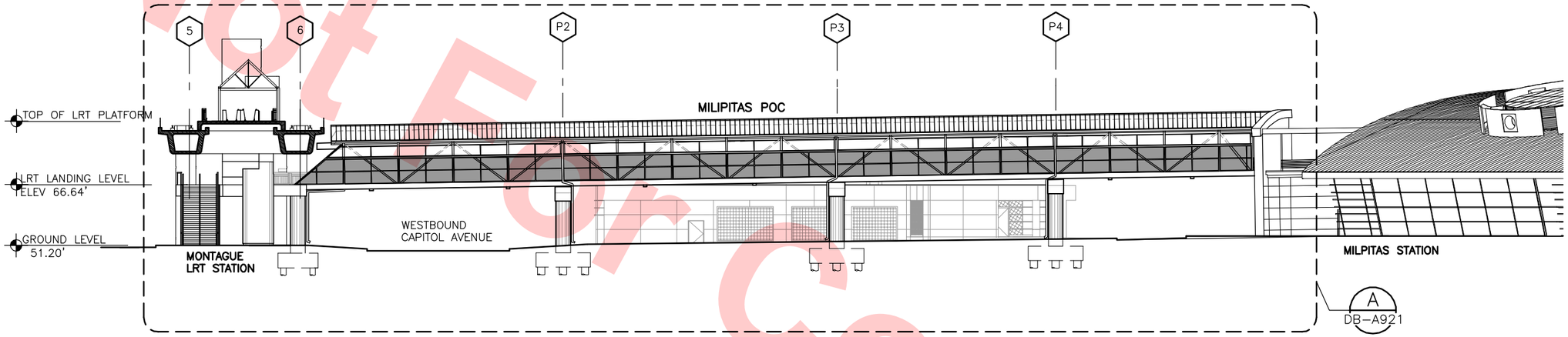

KEY ELEVATION–SOUTH
SCALE: 1/16"=1'-0"
A DB-A920 DB-A900 DB-A901 DB-A902

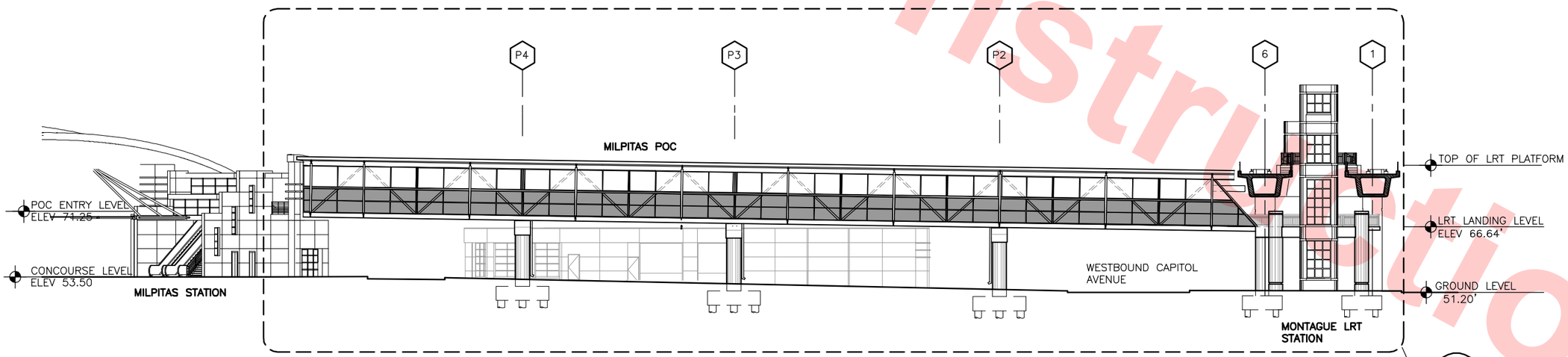

KEY ELEVATION–NORTH
SCALE: 1/16"=1'-0"
B DB-A920 DB-A900 DB-A901 DB-A902

16' 0' 16' 32'
GRAPHIC SCALE

REV	DATE	BY	SUB	APP	DESCRIPTION
0	20130710				READINESS FOR CONSTRUCTION

DESIGNED BY S. SOPORI
DRAWN BY K. STEPANIAN
CHECKED BY S. DEBNATH
IN CHARGE R. BARLAAN
DATE 20130710

LICENSED ARCHITECT SOMESH DEBNATH No. C21523 STATE OF CALIFORNIA

Skanska Shimmick Herzog
1436 California Circle
Milpitas, California 95035
A Joint Venture

Anil Verma Associates, Inc.
1970 Broadway, Suite 535
Oakland, CA 94612
Phone: (510) 835-2537 Fax: (510) 535-2339

SUBMITTED

Lockwood, Andrews & Newnam, Inc. A LEO A DALY COMPANY
T·Y·LIN INTERNATIONAL

APPROVED

VTA BART SILICON VALLEY
BART SILICON VALLEY BERRYESSA EXTENSION

LINE, TRACK, STATIONS AND SYSTEMS DESIGN UNIT 023
MONTAGUE LRT AND MILPITAS POC

KEY ELEVATIONS

CADD FILENAME C700-S-DB-A920.dwg
SIZE D | SCALE 1/16"=1'-0"
CONTRACT NO. C700 | REV. 0
AREA CODE DB | SHEET NO. A920 | PAGE NO. 0622

JosephG Jun 26, 2013 – 12:10pm G:\Current Projects\VTA-Berryessa Extension Project\Station – Milpitas\CAD\Drawings Out\13-0710 C700 MS LRT_POC – RFC Submittal\MS C700-S-DB-A920.dwg

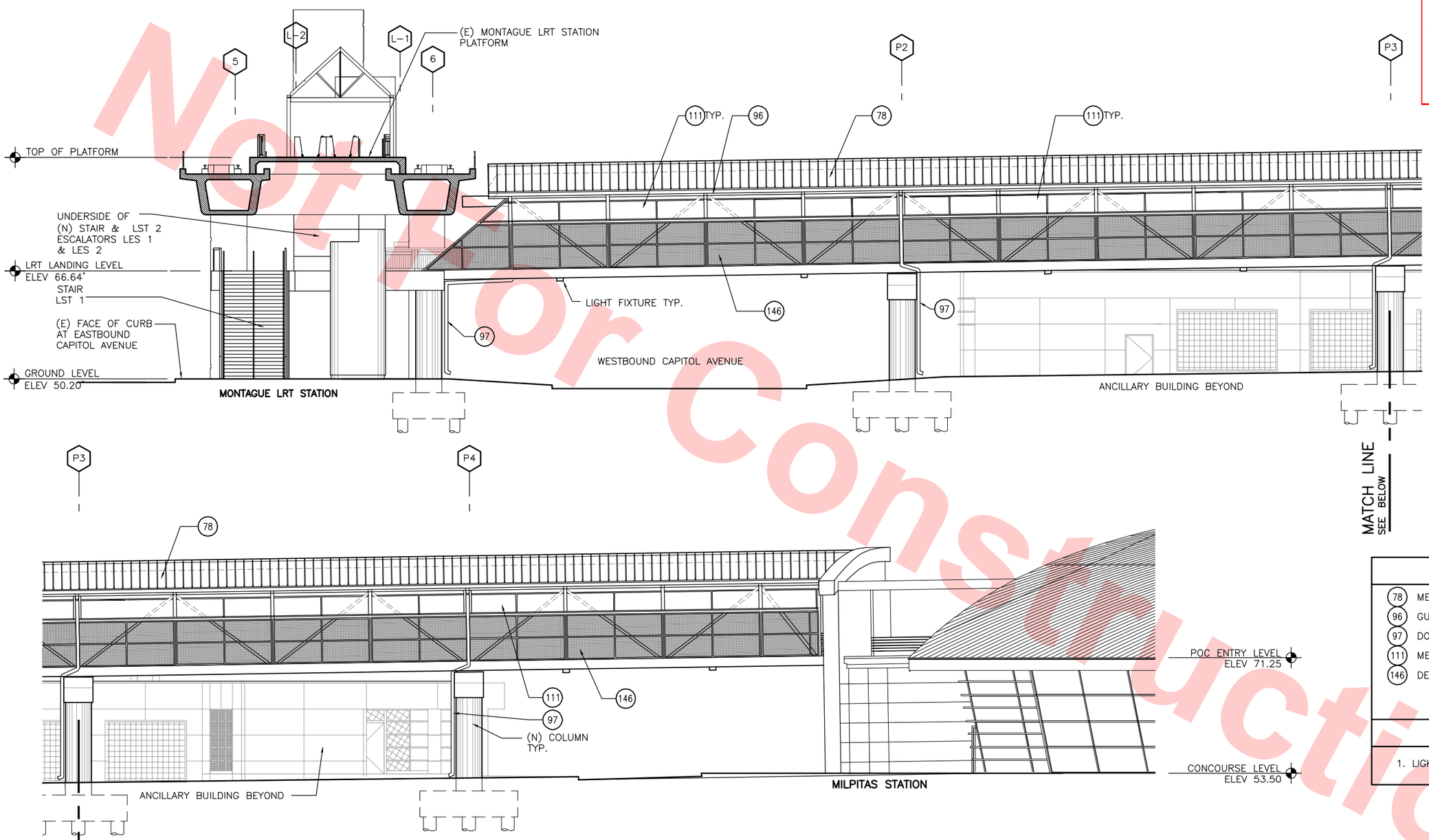

Santa Clara Valley Transportation Authority

____NO EXCEPTIONS TAKEN (NET)
____MAKE CORRECTIONS NOTED (MCN)
____AMEND AND RESUBMIT (A/R)

Any action shown above is subject to the terms of the contract and does not relieve the Contractor of any of its obligations under the contract, including design and detailing.

Contract No.: DB11002F

By: _____ Date: _____

Not For Construction

KEY NOTES

- (78) METAL ROOFING
- (96) GUTTER
- (97) DOWNSPOUT/RAINWATER LEADER
- (111) METAL PANEL. SEE SPECS FOR DETAILS.
- (146) DECORATIVE STAINLESS STEEL MESH

NOTES:

1. LIGHT FIXTURE UNDER THE POC– SEE ELCTRICAL

POC SOUTH ELEVATION (A)
SCALE: 1/8"=1'-0"
DB-A921 DB-A911
DB-A912
DB-A913
DB-A914X
DB-A916
DB-A917

8' 0' 8' 16'
GRAPHIC SCALE

REV	DATE	BY	SUB	APP	DESCRIPTION
0	20130710				READINESS FOR CONSTRUCTION

DESIGNED BY S. SOPORI
DRAWN BY K. STEPANIAN
CHECKED BY S. DEBNATH
IN CHARGE R. BARLAAN
DATE 20130710

LICENSED ARCHITECT SUHESH DEBNATH No. C21523 STATE OF CALIFORNIA

Skanska Shimmick Herzog
1436 California Circle
Milpitas, California 95035
A Joint Venture

Anil Verma Associates, Inc.
1970 Broadway, Suite 525, Oakland, CA 94612
Phone: (510) 835-2537 Fax: (510) 835-2339

Lockwood, Andrews & Newnam, Inc. A LEO A DALY COMPANY

T·Y·LIN INTERNATIONAL

SUBMITTED _____ APPROVED _____

VTA BART SILICON VALLEY
BART SILICON VALLEY BERRYESSA EXTENSION

LINE, TRACK, STATIONS AND SYSTEMS DESIGN UNIT 023
MONTAGUE LRT AND MILPITAS POC

POC SOUTH ELEVATION

CADD FILENAME C700-S-DB-A921.dwg
SIZE D | SCALE 1/8"=1'-0"
CONTRACT NO. C700 | REV. 0
AREA CODE DB | SHEET NO. A921 | PAGE NO. 0623

JosephG Jun 26, 2013 – 12:11pm G:\Current Projects\VTA-Berryessa Extension Project\Station – Milpitas\CAD\Drawings Out\13-0710 C700 MS LRT_POC – RFC Submittal\MS C700-S-DB-A921.dwg

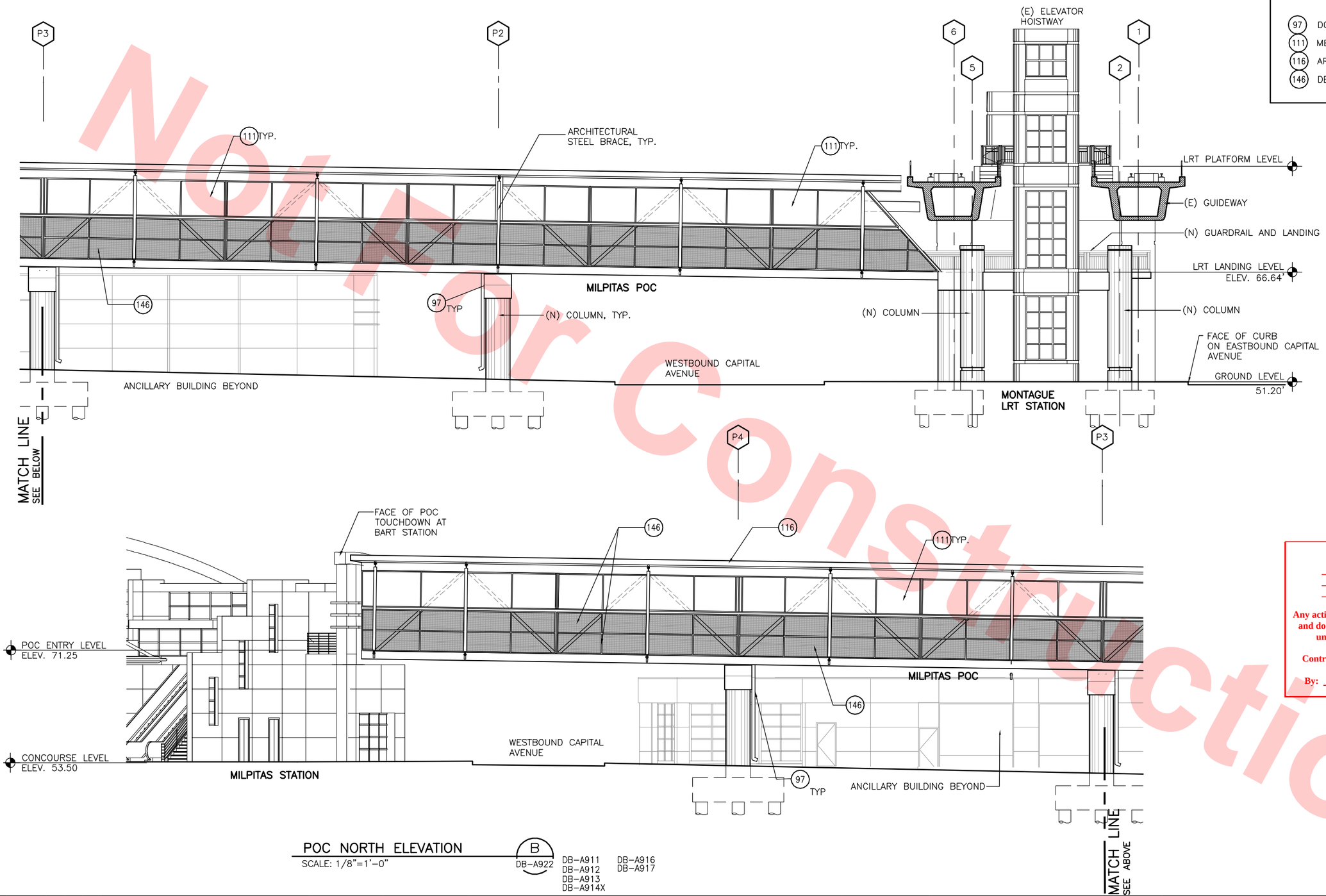

POC NORTH ELEVATION

SCALE: 1/8"=1'-0"

B / DB-A922

DB-A911
DB-A912
DB-A913
DB-A914X
DB-A916
DB-A917

KEY NOTES

- 97 DOWNSPOUT/RAINWATER LEADER
- 111 METAL PANEL. SEE SPECS FOR DETAILS.
- 116 ARCHITECTURAL METAL FASCIA
- 146 DECORATIVE STAINLESS STEEL MESH

Santa Clara Valley Transportation Authority

____NO EXCEPTIONS TAKEN (NET)
____MAKE CORRECTIONS NOTED (MCN)
____AMEND AND RESUBMIT (A/R)

Any action shown above is subject to the terms of the contract and does not relieve the Contractor of any of its obligations under the contract, including design and detailing.

Contract No.: DB11002F

By: _____ **Date:** _____

8' 0' 8' 16'
GRAPHIC SCALE

Not For Construction

REV	DATE	BY	SUB	APP	DESCRIPTION
0	20130710				READINESS FOR CONSTRUCTION

DESIGNED BY S. SOPORI
DRAWN BY K. STEPANIAN
CHECKED BY S. DEBNATH
IN CHARGE R. BARLAAN
DATE 20130710

LICENSED ARCHITECT SOMESH DEBNATH No. C21523 STATE OF CALIFORNIA

Skanska Shimmick Herzog
1436 California Circle
Milpitas, California 95035
A Joint Venture

Anil Verma Associates, Inc.
1970 Broadway, Suite 525, Oakland, CA 94612
Phone: (510) 835-2537 Fax: (510) 535-2339

SUBMITTED

Lockwood, Andrews & Newnam, Inc. A LEO A DALY COMPANY
T-Y-LIN INTERNATIONAL

APPROVED

VTA BART SILICON VALLEY
BART SILICON VALLEY BERRYESSA EXTENSION

LINE, TRACK, STATIONS AND SYSTEMS
DESIGN UNIT 023
MONTAGUE LRT AND MILPITAS POC

POC NORTH ELEVATION

CADD FILENAME C700-S-DB-A922.dwg
SIZE D | SCALE 1/8"=1'-0"
CONTRACT NO. C700 | REV. 0
AREA CODE DB | SHEET NO. A922 | PAGE NO. 0624

JosephG Jun 26, 2013 - 12:11pm G:\Current Projects\VTA-Berryessa Extension Project\Station - Milpitas\CAD\Drawings Out\13-0710 C700 MS LRT_POC - RFC Submittal\MS C700-S-DB-A922.dwg

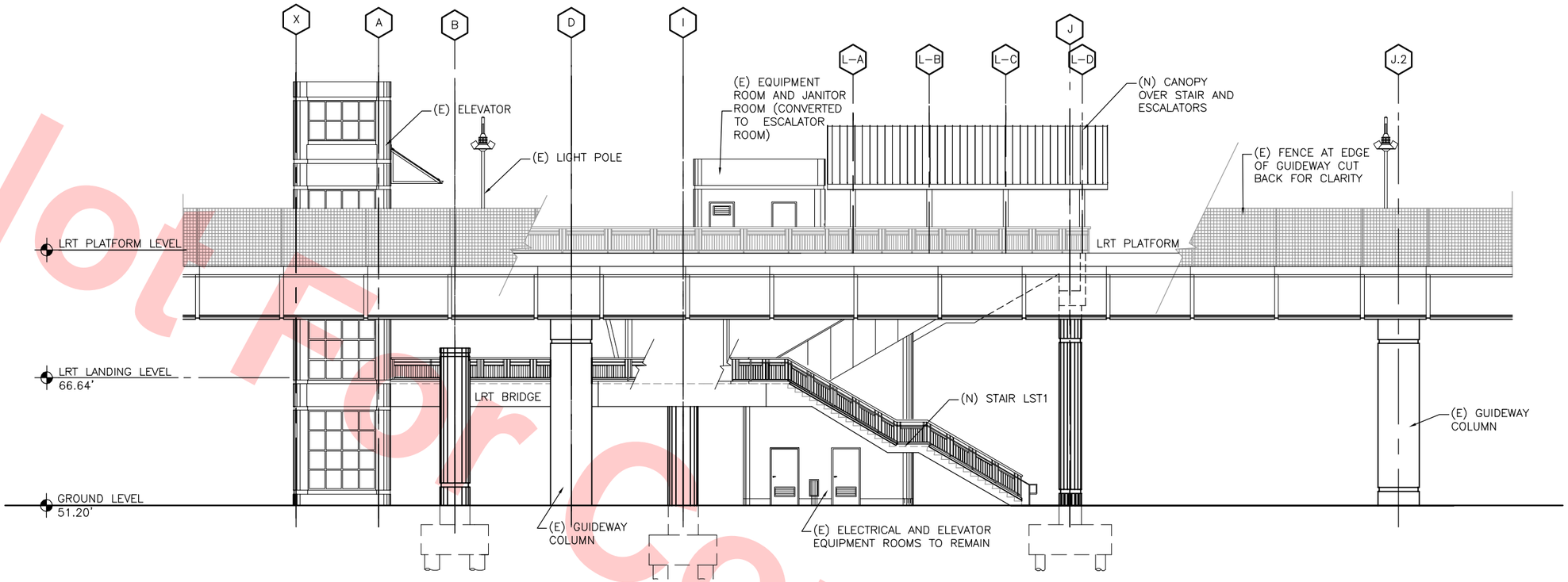

LRT WEST ELEVATION

SCALE: 1/8"=1'-0"

DB-A911
DB-A912
DB-A913
DB-A914X
DB-A916
DB-A917

Not For Construction

Santa Clara Valley Transportation Authority

____NO EXCEPTIONS TAKEN (NET)
____MAKE CORRECTIONS NOTED (MCN)
____AMEND AND RESUBMIT (A/R)

Any action shown above is subject to the terms of the contract and does not relieve the Contractor of any of its obligations under the contract, including design and detailing.

Contract No.: DB11002F

By: _____ Date: _____

8' 0' 8' 16'

GRAPHIC SCALE

REV	DATE	BY	SUB	APP	DESCRIPTION
0	20130710				READINESS FOR CONSTRUCTION

DESIGNED BY S. SOPORI
DRAWN BY K. STEPANIAN
CHECKED BY S. DEBNATH
IN CHARGE R. BARLAAN
DATE 20130710

LICENSED ARCHITECT SOMESH DEBNATH No. C21523 STATE OF CALIFORNIA

Skanska Shimmick Herzog
1436 California Circle
Milpitas, California 95035
A Joint Venture

Anil Verma Associates, Inc.
1970 Broadway, Suite 525, Oakland, CA 94612
Phone: (510) 835-2537 Fax: (510) 835-2339
SUBMITTED

Lockwood, Andrews & Newnam, Inc. A LAN & BAYH COMPANY
T·Y·LIN INTERNATIONAL
APPROVED

VTA BART SILICON VALLEY
BART SILICON VALLEY BERRYESSA EXTENSION

LINE, TRACK, STATIONS AND SYSTEMS DESIGN UNIT 023
MONTAGUE LRT AND MILPITAS POC

LRT WEST ELEVATION

CADD FILENAME C700-S-DB-A923.dwg
SIZE D | SCALE AS NOTED
CONTRACT NO. C700 | REV. 0
AREA CODE DB | SHEET NO. A923 | PAGE NO. 0625

Jun 26, 2013 - 12:11pm G:\Current Projects\VTA-Berryessa Extension Project\Station - Milpitas\CAD\Drawings Out\13-0710 C700 MS LRT_POC - RFC Submittal\MS C700-S-DB-A923.dwg
JosephG

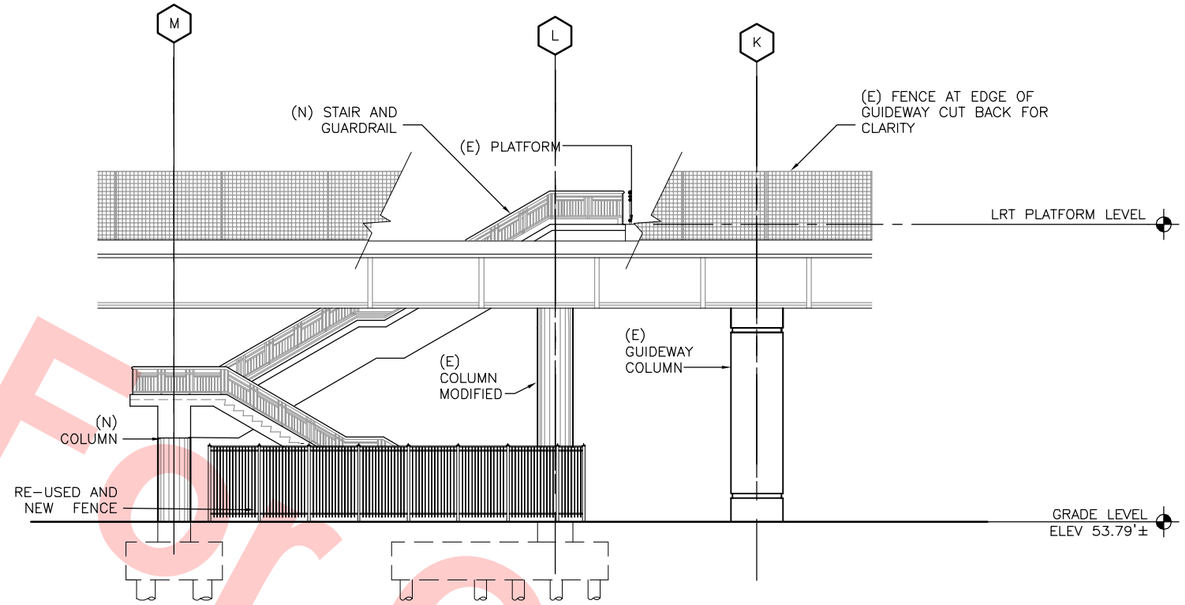

LRT EMERGENCY EXIT STAIR–EAST ELEVATION (A)
SCALE: 1/8"=1'-0"
DB-A924 DB-A915X

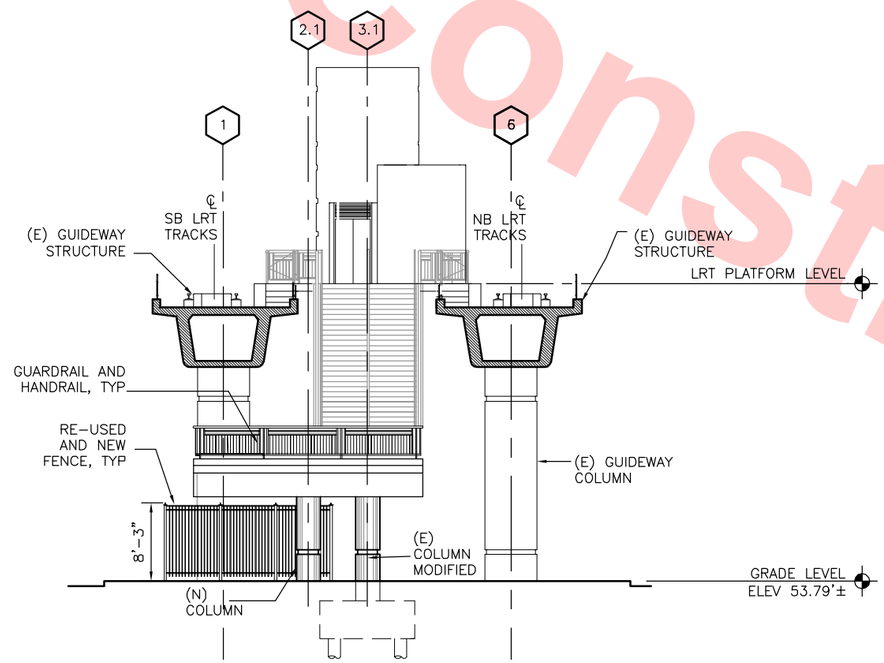

LRT EMERGENCY EXIT STAIR–SOUTH ELEVATION (B)
SCALE: 1/8"=1'-0"
DB-A924 DB-A915X

Santa Clara Valley Transportation Authority

____NO EXCEPTIONS TAKEN (NET)
____MAKE CORRECTIONS NOTED (MCN)
____AMEND AND RESUBMIT (A/R)

Any action shown above is subject to the terms of the contract and does not relieve the Contractor of any of its obligations under the contract, including design and detailing.

Contract No.: DB11002F

By: _____ Date: _____

8' 0' 8' 16'
GRAPHIC SCALE

Not For Construction

REV	DATE	BY	SUB	APP	DESCRIPTION
0	20130710				READINESS FOR CONSTRUCTION

DESIGNED BY S. SOPORI
DRAWN BY K. STEPANIAN
CHECKED BY S. DEBNATH
IN CHARGE R. BARLAAN
DATE 20130710

LICENSED ARCHITECT SOMESH DEBNATH No. C21523 STATE OF CALIFORNIA

Skanska Shimmick Herzog
1436 California Circle
Milpitas, California 95035
A Joint Venture

Anil Verma Associates, Inc.
1970 Broadway, Suite 325, Oakland, CA 94612
Phone: (510) 835-2537 Fax: (510) 835-2339

Lockwood, Andrews & Newnam, Inc. A LAN & BALY COMPANY
T·Y·LIN INTERNATIONAL

SUBMITTED _____ APPROVED _____

VTA BART SILICON VALLEY
BART SILICON VALLEY BERRYESSA EXTENSION

LINE, TRACK, STATIONS AND SYSTEMS DESIGN UNIT 023
MONTAGUE LRT AND MILPITAS POC

LRT EMERGENCY EXIT STAIRS
SOUTH AND EAST ELEVATIONS

CADD FILENAME C700-S-DB-A924.dwg
SIZE D | SCALE 1/8"=1'-0"
CONTRACT NO. C700 | REV. 0
AREA CODE DB | SHEET NO. A924 | PAGE NO. 0626

JosephG Jun 26, 2013 – 12:11pm G:\Current Projects\VTA-Berryessa Extension Project\Station – Milpitas\CAD\Drawings Out\13-0710 C700 MS LRT_POC – RFC Submittal\MS C700-S-DB-A924.dwg

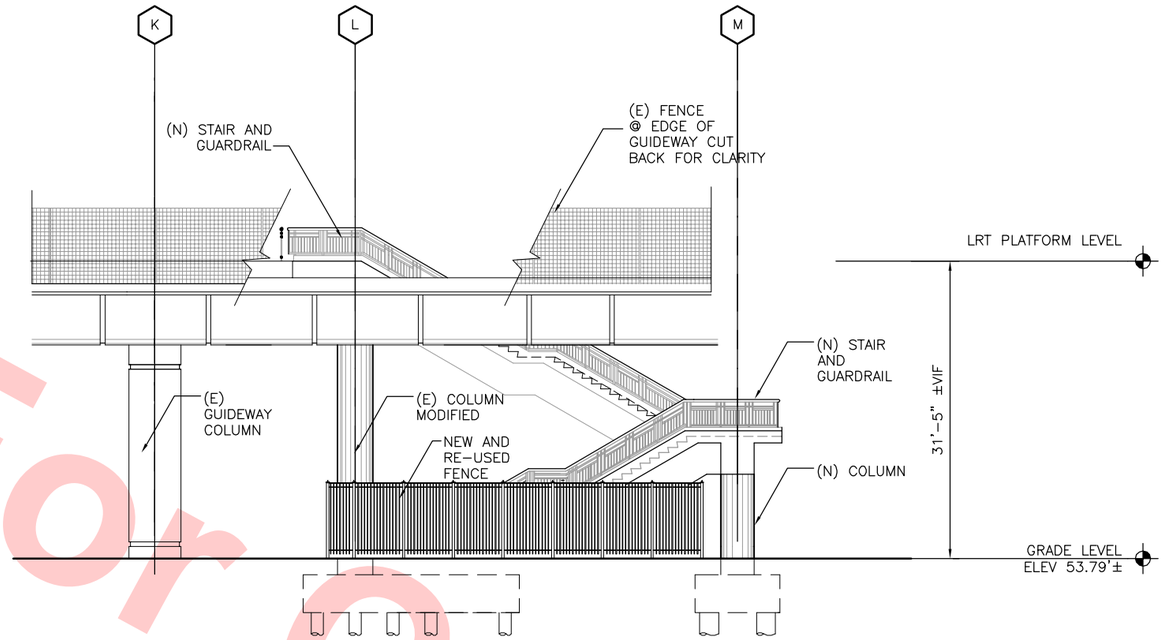

LRT EMERGENCY EXIT STAIR–WEST ELEVATION (A)

SCALE: 1/8"=1'-0"

DB-A925

DB-A915X

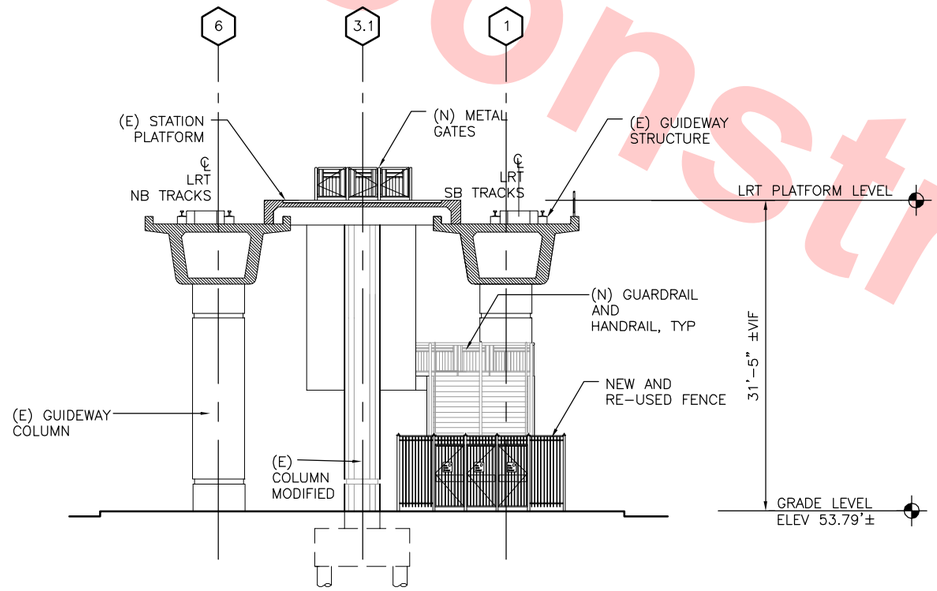

LRT EMERGENCY EXIT STAIR–NORTH ELEVATION (B)

SCALE: 1/8"=1'-0"

DB-A925

DB-A915X

Santa Clara Valley Transportation Authority

____NO EXCEPTIONS TAKEN (NET)
____MAKE CORRECTIONS NOTED (MCN)
____AMEND AND RESUBMIT (A/R)

Any action shown above is subject to the terms of the contract and does not relieve the Contractor of any of its obligations under the contract, including design and detailing.

Contract No.: DB11002F

By: _____ Date: _____

8' 0' 8' 16'

GRAPHIC SCALE

Not For Construction

REV	DATE	BY	SUB	APP	DESCRIPTION
0	20130710				READINESS FOR CONSTRUCTION

DESIGNED BY S. SOPORI
DRAWN BY K. STEPANIAN
CHECKED BY S. DEBNATH
IN CHARGE R. BARLAAN
DATE 20130710

LICENSED ARCHITECT SOMESH DEBNATH No. C21523 STATE OF CALIFORNIA

Skanska Shimmick Herzog
1436 California Circle
Milpitas, California 95035
A Joint Venture

Anil Verma Associates, Inc.
1970 Broadway, Suite 325
Oakland, CA 94612
Phone: (510) 835-2537 Fax: (510) 835-2339

SUBMITTED

Lockwood, Andrews & Newnam, Inc. A LEO A DALY COMPANY
T·Y·LIN INTERNATIONAL

APPROVED

VTA BART SILICON VALLEY

BART SILICON VALLEY BERRYESSA EXTENSION

LINE, TRACK, STATIONS AND SYSTEMS DESIGN UNIT 023
MONTAGUE LRT & MILPITAS POC

LRT EMERGENCY EXIT STAIRS
WEST AND NORTH ELEVATIONS

CADD FILENAME C700-S-DB-A925.dwg
SIZE D | SCALE 1/8"=1'-0"
CONTRACT NO. C700 | REV. 0
AREA CODE DB | SHEET NO. A925 | PAGE NO. 0627

JosephG Jun 26, 2013 – 12:12pm G:\Current Projects\VTA-Berryessa Extension Project\Station – Milpitas\CAD\Drawings Out\13-0710 C700 MS LRT_POC – RFC Submittal\MS C700-S-DB-A925.dwg

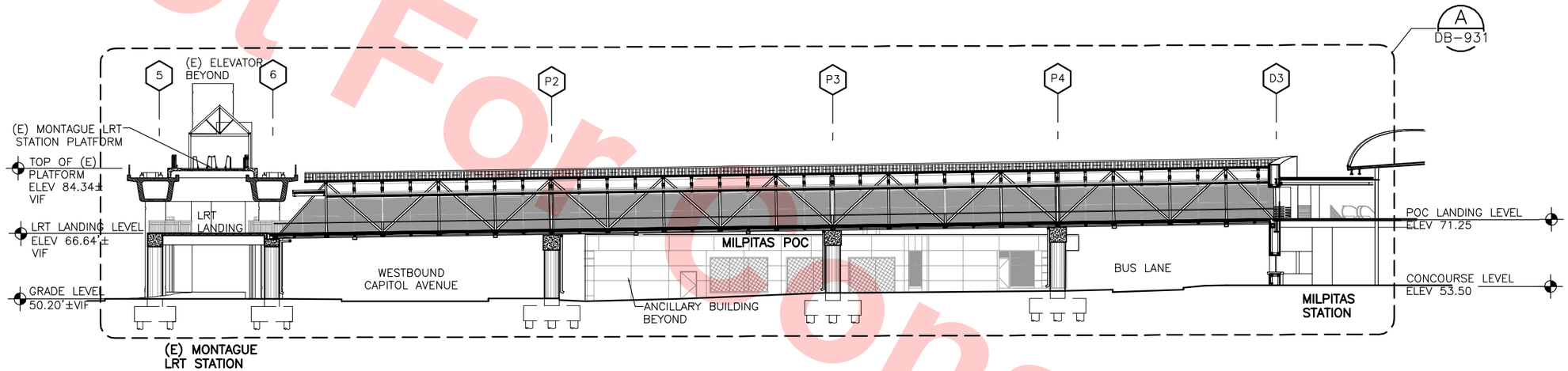

POC KEY LONGITUDINAL SECTION

SCALE: 1/16"=1'-0"

DB-A900
DB-A901
DB-A902

Santa Clara Valley Transportation Authority

____NO EXCEPTIONS TAKEN (NET)
____MAKE CORRECTIONS NOTED (MCN)
____AMEND AND RESUBMIT (A/R)

Any action shown above is subject to the terms of the contract and does not relieve the Contractor of any of its obligations under the contract, including design and detailing.

Contract No.: DB11002F

By: _____ Date: _____

Not For Construction

REV	DATE	BY	SUB	APP	DESCRIPTION
0	20130710				READINESS FOR CONSTRUCTION

DESIGNED BY S. SOPORI
DRAWN BY K. STEPANIAN
CHECKED BY S. DEBNATH
IN CHARGE R. BARLAAN
DATE 20130710

LICENSED ARCHITECT SOMESH DEBNATH No. C21523 STATE OF CALIFORNIA

Skanska Shimmick Herzog
1436 California Circle
Milpitas, California 95035
A Joint Venture

Anil Verma Associates, Inc.
1970 Broadway, Suite 525 Oakland, CA 94612
Phone: (510) 835-2537 Fax: (510) 835-2339
SUBMITTED

Lockwood, Andrews & Newnam, Inc. A LEO A DALY COMPANY
T·Y·LIN INTERNATIONAL
APPROVED

VTA BART SILICON VALLEY
BART SILICON VALLEY BERRYESSA EXTENSION

LINE, TRACK, STATIONS AND SYSTEMS DESIGN UNIT 023
MONTAGUE LRT AND MILPITAS POC

POC KEY LONGITUDINAL SECTION

CADD FILENAME C700-S-DB-A930.dwg
SIZE D | SCALE 1/16"=1'-0"
CONTRACT NO. C700 | REV. 0
AREA CODE DB | SHEET NO. A930 | PAGE NO. 0628

JosephG Jun 26, 2013 - 12:12pm G:\Current Projects\VTA-Berryessa Extension Project\Station - Milpitas\CAD\Drawings Out\13-0710 C700 MS LRT_POC - RFC Submittal\MS C700-S-DB-A930.dwg

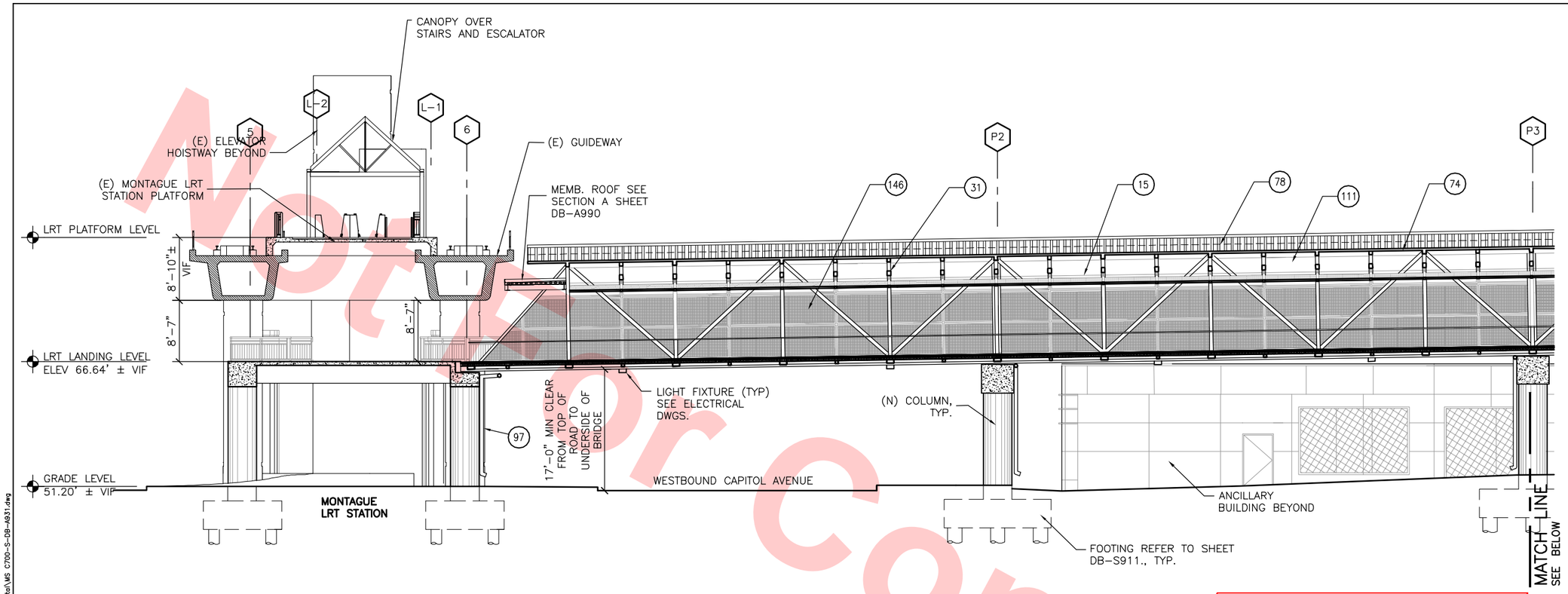

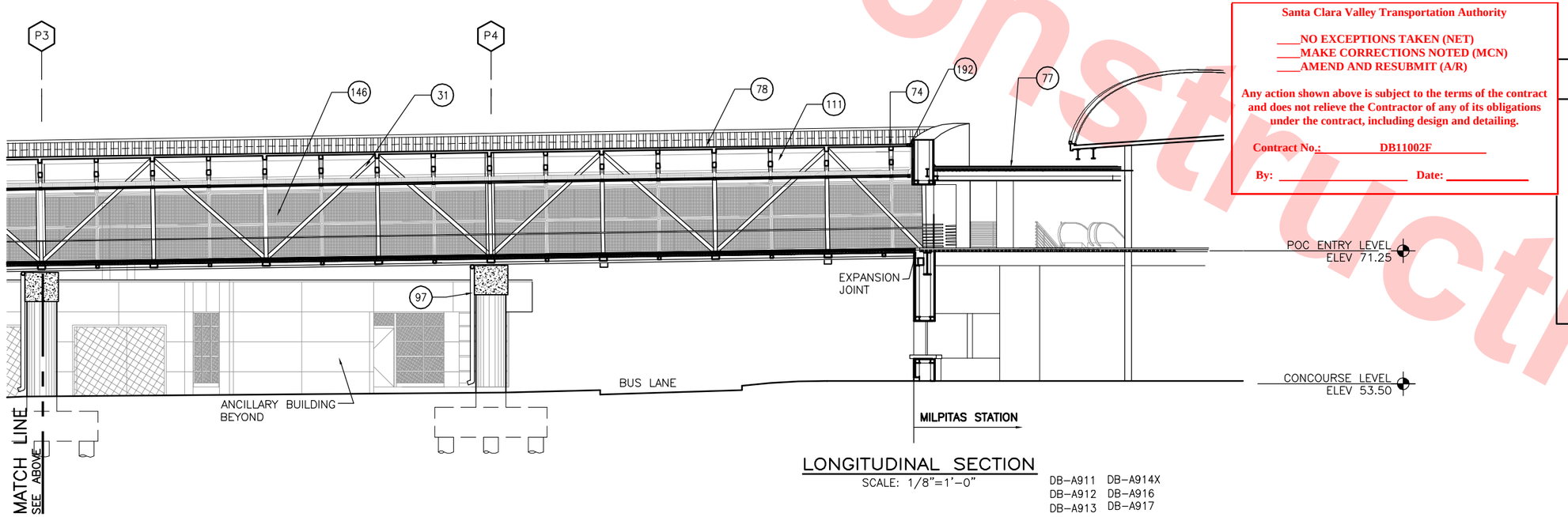

LONGITUDINAL SECTION

SCALE: 1/8"=1'-0"

DB-A911 DB-A914X
DB-A912 DB-A916
DB-A913 DB-A917

Santa Clara Valley Transportation Authority

____NO EXCEPTIONS TAKEN (NET)
____MAKE CORRECTIONS NOTED (MCN)
____AMEND AND RESUBMIT (A/R)

Any action shown above is subject to the terms of the contract and does not relieve the Contractor of any of its obligations under the contract, including design and detailing.

Contract No.: DB11002F

By: _____ Date: _____

KEY NOTES

- 15 LIGHT FIXTURE
- 31 STRUCTURAL MEMBER
- 74 EXPOSED METAL DECK
- 77 MEMBRANE ROOFING
- 78 METAL ROOFING
- 97 DOWNSPOUT/RAINWATER LEADER
- 111 METAL PANEL
- 146 DECORATIVE STAINLESS STEEL MESH
- 192 ROOF EXPANSION JOINT

Not For Construction

REV	DATE	BY	SUB	APP	DESCRIPTION
0	20130710				READINESS FOR CONSTRUCTION

DESIGNED BY S. SOPORI
DRAWN BY K. STEPANIAN
CHECKED BY S. DEBNATH
IN CHARGE R. BARLAAN
DATE 20130710

LICENSED ARCHITECT SOMESH DEBNATH No. C21523 STATE OF CALIFORNIA

Skanska Shimmick Herzog
1436 California Circle
Milpitas, California 95035
A Joint Venture

Anil Verma Associates, Inc.
1970 Broadway, Suite 525, Oakland, CA 94612
Phone: (510) 835-2537 Fax: (510) 835-2339

SUBMITTED

Lockwood, Andrews & Newnam, Inc. A LAN & RAIN COMPANY
T·Y·LIN INTERNATIONAL

APPROVED

VTA BART SILICON VALLEY

BART SILICON VALLEY BERRYESSA EXTENSION

LINE, TRACK, STATIONS AND SYSTEMS DESIGN UNIT 023
MONTAGUE AND LRT MILPITAS POC

POC LONGITUDINAL SECTION

CADD FILENAME C700-S-DB-A931.dwg
SIZE D | SCALE 1/8"=1'-0"
CONTRACT NO. C700 | REV. 0
AREA CODE DB | SHEET NO. A931 | PAGE NO. 0629

JosephG Jun 26, 2013 - 12:12pm G:\Current Projects\VTA-Berryessa Extension Project\Station - Milpitas\CAD\Drawings Out\13-0710 C700 MS LRT_POC - RFC Submittal\MS C700-S-DB-A931.dwg

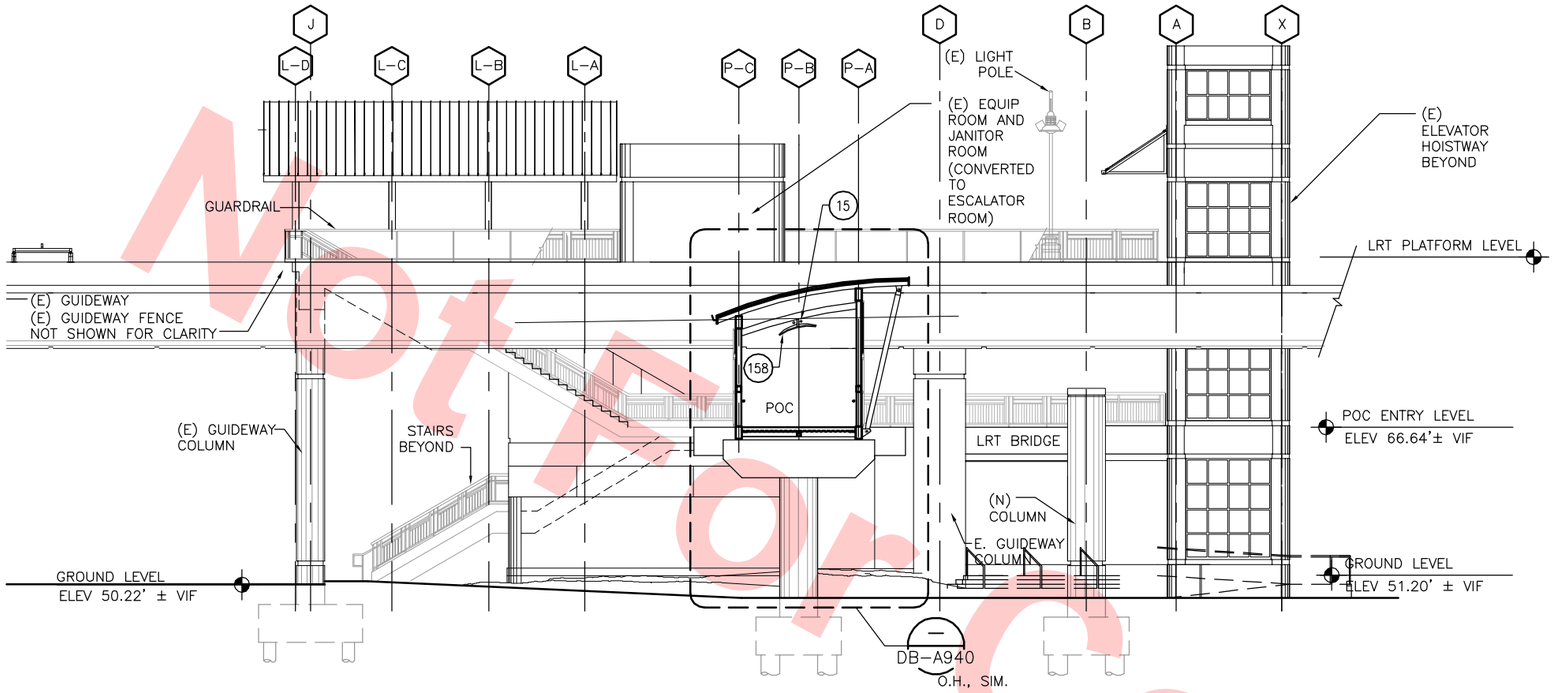

CROSS SECTION C
SCALE: 1/8"=1'-0"
DB-A935X
DB-A911
DB-A912
DB-A913
DB-A914
DB-A916
DB-A917

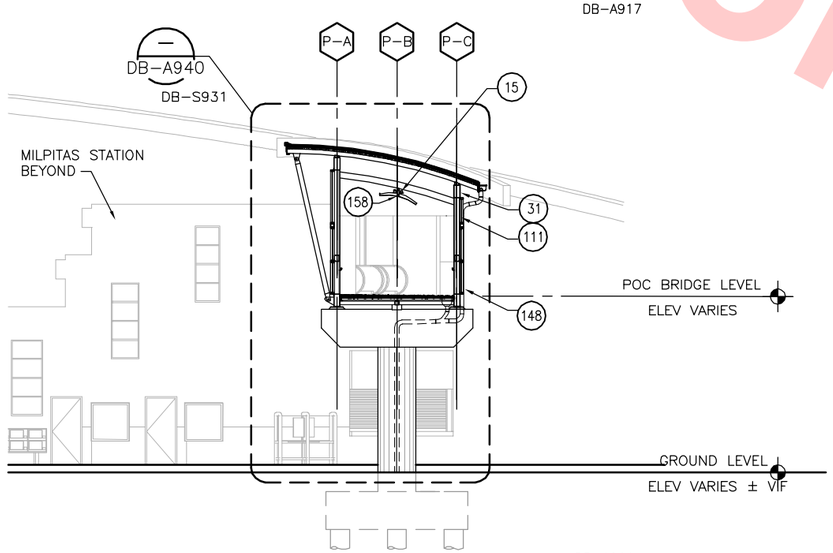

CROSS SECTION B
SCALE: 1/8"=1'-0"
DB-A935X
DB-A911
DB-A912
DB-A913
DB-A914X
DB-A916
DB-A917

KEY NOTES

15	LIGHT FIXTURE
31	STRUCTURAL MEMBER
111	METAL PANEL
148	DOWNSPOUT/RAINWATER LEADER
158	METAL VALANCE

Santa Clara Valley Transportation Authority

____NO EXCEPTIONS TAKEN (NET)
____MAKE CORRECTIONS NOTED (MCN)
____AMEND AND RESUBMIT (A/R)

Any action shown above is subject to the terms of the contract and does not relieve the Contractor of any of its obligations under the contract, including design and detailing.

Contract No.: DB11002F

By: _____ Date: _____

Not For Construction

REV	DATE	BY	SUB	APP	DESCRIPTION
0	20130710				READINESS FOR CONSTRUCTION

DESIGNED BY S. SOPORI
DRAWN BY K. STEPANIAN
CHECKED BY S. DEBNATH
IN CHARGE R. BARLAAN
DATE 20130710

LICENSED ARCHITECT SOMESH DEBNATH No. C21523 STATE OF CALIFORNIA

Skanska Shimmick Herzog
1436 California Circle
Milpitas, California 95035
A Joint Venture

Anil Verma Associates, Inc.
1970 Broadway, Suite 325, Oakland, CA 94612
Phone: (510) 835-2537 Fax: (510) 835-2339
SUBMITTED

Lockwood, Andrews & Newnam, Inc. A LEO A DALY COMPANY
T·Y·LIN INTERNATIONAL
APPROVED

NOT FOR CONSTRUCTION

VTA BART SILICON VALLEY
BART SILICON VALLEY BERRYESSA EXTENSION

LINE, TRACK, STATIONS AND SYSTEMS DESIGN UNIT 023
MONTAGUE LRT AND MILPITAS POC

POC CROSS SECTIONS

CADD FILENAME C700-S-DB-A935X.dwg
SIZE D | SCALE 1/8"=1'-0"
CONTRACT NO. C700 | REV. 0
AREA CODE DB | SHEET NO. A935X | PAGE NO. 0630

JosephG Jun 26, 2013 – 12:13pm G:\Current Projects\VTA-Berryessa Extension Project\Station – Milpitas\CAD\Drawings Out\13-0710 C700 MS LRT_POC – RFC Submittal\MS C700-S-DB-A935X.dwg

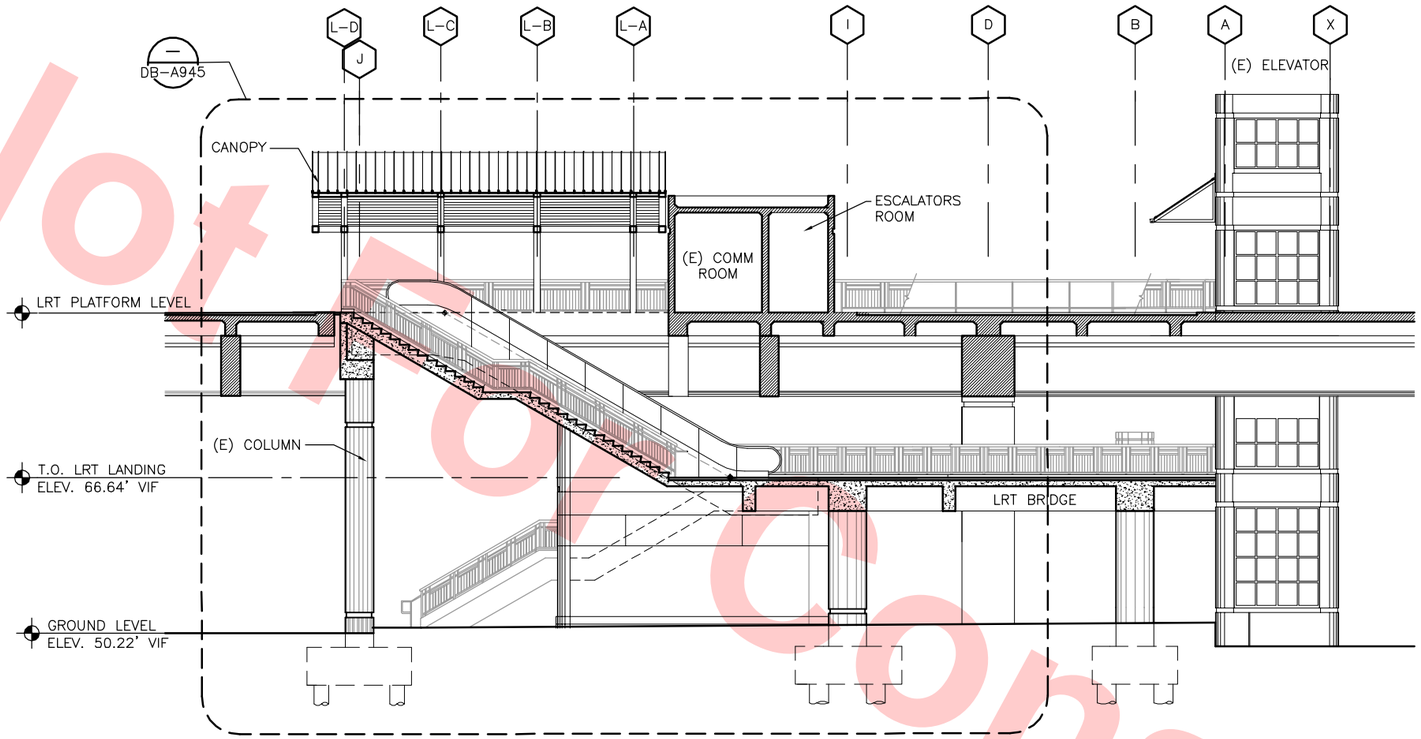

SECTION
SCALE: 1/8"=1'-0"

DB-A911
DB-A912
DB-A913
DB-A914X
DB-A916
DB-A917

Santa Clara Valley Transportation Authority

____NO EXCEPTIONS TAKEN (NET)
____MAKE CORRECTIONS NOTED (MCN)
____AMEND AND RESUBMIT (A/R)

Any action shown above is subject to the terms of the contract and does not relieve the Contractor of any of its obligations under the contract, including design and detailing.

Contract No.: DB11002F

By: _____ Date: _____

Not For Construction

REV	DATE	BY	SUB	APP	DESCRIPTION
0	20130710				READINESS FOR CONSTRUCTION

DESIGNED BY S. SOPORI
DRAWN BY K. STEPANIAN
CHECKED BY S. DEBNATH
IN CHARGE R. BARLAAN
DATE 20130710

LICENSED ARCHITECT SOMESH DEBNATH No. C21523 STATE OF CALIFORNIA

Skanska Shimmick Herzog
1436 California Circle
Milpitas, California 95035
A Joint Venture

Anil Verma Associates, Inc.
1970 Broadway, Suite 525, Oakland, CA 94612
Phone: (510) 835-2537 Fax: (510) 835-2339

Lockwood, Andrews & Newnam, Inc. A LAN & BALL COMPANY
T·Y·LIN INTERNATIONAL

SUBMITTED _____
APPROVED _____

VTA BART SILICON VALLEY
BART SILICON VALLEY BERRYESSA EXTENSION

LINE, TRACK, STATIONS AND SYSTEMS
DESIGN UNIT 023
MONTAGUE LRT AND MILPITAS POC

LRT SECTIONS
SHEET 1 OF 3

CADD FILENAME C700-S-DB-A936.dwg
SIZE D | SCALE 1/8"=1'-0"
CONTRACT NO. C700 | REV. 0
AREA CODE DB | SHEET NO. A936 | PAGE NO. 0631

JosephG Jun 26, 2013 - 12:13pm G:\Current Projects\VTA-Berryessa Extension Project\Station - Milpitas\CAD\Drawings Out\13-0710 C700 MS LRT_POC - RFC Submittal\MS C700-S-DB-A936.dwg

Not For Construction

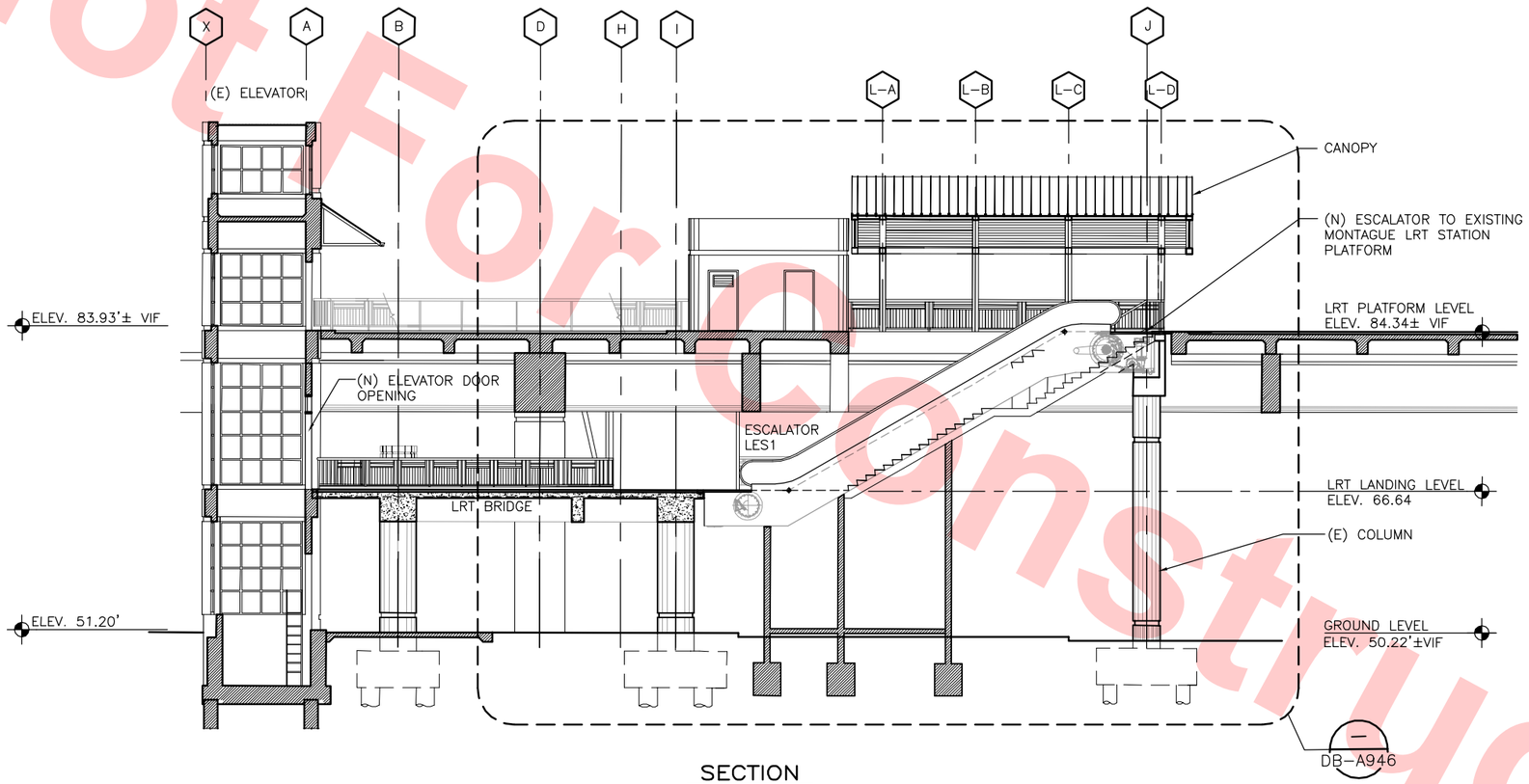

SECTION
SCALE: 1"=1'-0"

DB-A911
DB-A912
DB-A913
DB-A914X
DB-A916
DB-A917

Santa Clara Valley Transportation Authority

____NO EXCEPTIONS TAKEN (NET)
____MAKE CORRECTIONS NOTED (MCN)
____AMEND AND RESUBMIT (A/R)

Any action shown above is subject to the terms of the contract and does not relieve the Contractor of any of its obligations under the contract, including design and detailing.

Contract No.: DB11002F

By: _____ **Date:** _____

8' 0' 8' 16'
GRAPHIC SCALE

REV	DATE	BY	SUB	APP	DESCRIPTION
0	20130710				READINESS FOR CONSTRUCTION

DESIGNED BY S. SOPORI
DRAWN BY K. STEPANIAN
CHECKED BY S. DEBNATH
IN CHARGE R. BARLAAN
DATE 20130710

LICENSED ARCHITECT SANJESH DEBNATH No. C21523 STATE OF CALIFORNIA

Skanska Shimmick Herzog
1436 California Circle
Milpitas, California 95035
A Joint Venture

Anil Verma Associates, Inc.
1970 Broadway, Suite 525 Oakland, CA 94612
Phone: (510) 835-2537 Fax: (510) 535-2339
SUBMITTED

Lockwood, Andrews & Newnam, Inc. A CH2M HILL COMPANY
T·Y·LIN INTERNATIONAL
APPROVED

VTA BART SILICON VALLEY
BART SILICON VALLEY BERRYESSA EXTENSION

LINE, TRACK, STATIONS AND SYSTEMS
DESIGN UNIT 023
MONTAGUE LRT AND MILPITAS POC

LRT SECTIONS
SHEET 2 OF 3

CADD FILENAME C700-S-DB-A937.dwg
SIZE D | SCALE 1/8"=1'-0"
CONTRACT NO. C700 | REV. 0
AREA CODE DB | SHEET NO. A937 | PAGE NO. 0632

JosephG Jun 26, 2013 - 12:13pm G:\Current Projects\VTA-Berryessa Extension Project\Station - Milpitas\CAD\Drawings Out\13-0710 C700 MS LRT_POC - RFC Submittal\MS C700-S-DB-A937.dwg

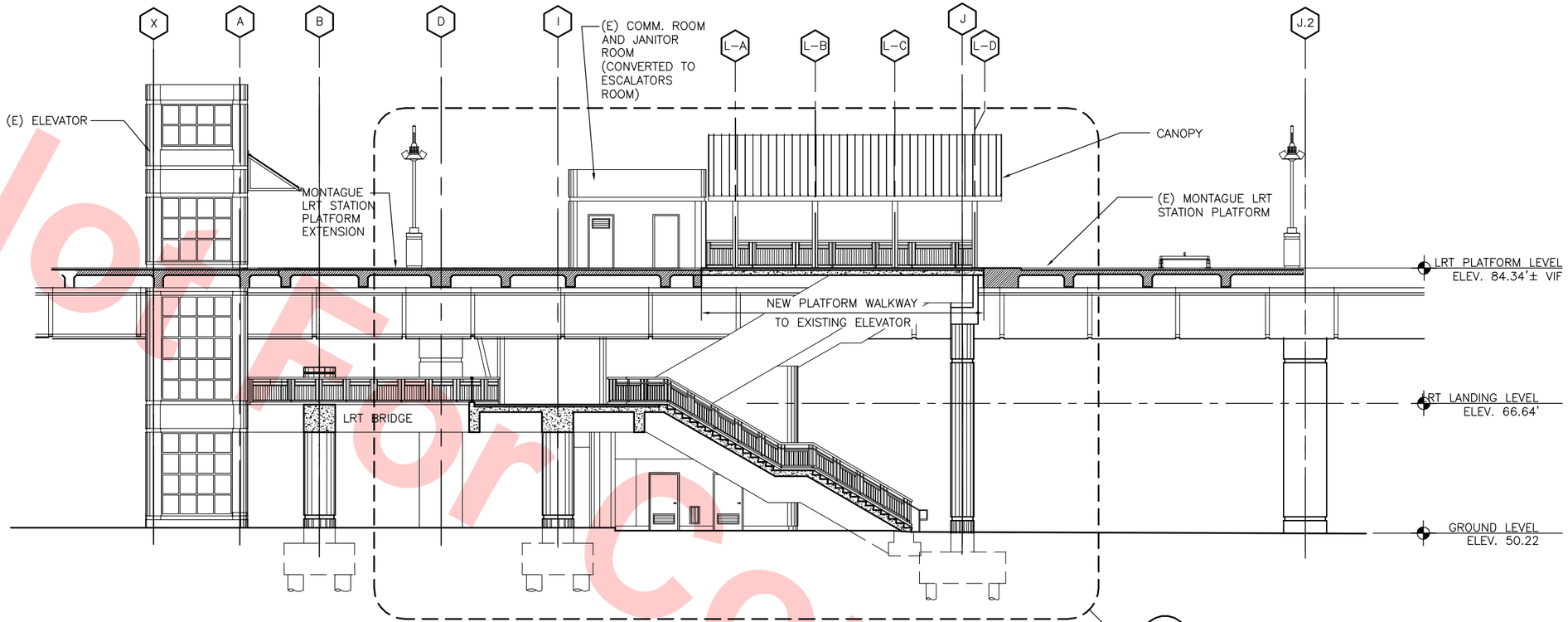

SECTION A DB–A938
SCALE:1/8"=1–'0"

DB–A911
DB–A912
DB–A913
DB–A914X
DB–A916
DB–A917

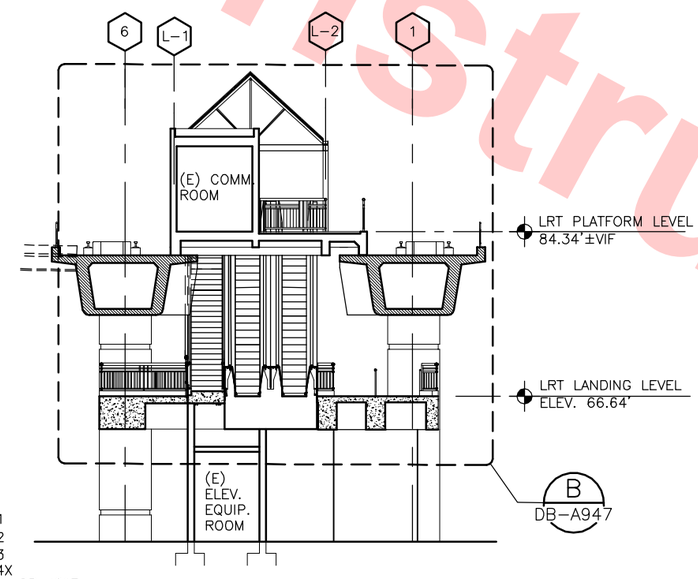

SECTION B DB–A938
SCALE:1/8"=1–'0"

DB–A911
DB–A912
DB–A913
DB–A914X
DB–A916 DB–A917

Santa Clara Valley Transportation Authority

____NO EXCEPTIONS TAKEN (NET)
____MAKE CORRECTIONS NOTED (MCN)
____AMEND AND RESUBMIT (A/R)

Any action shown above is subject to the terms of the contract and does not relieve the Contractor of any of its obligations under the contract, including design and detailing.

Contract No.: DB11002F

By: _____ **Date:** _____

8' 0' 8' 16'
GRAPHIC SCALE

Not For Construction

REV	DATE	BY	SUB	APP	DESCRIPTION
0	20130710				READINESS FOR CONSTRUCTION

DESIGNED BY S. SOPORI
DRAWN BY K. STEPANIAN
CHECKED BY S. DEBNATH
IN CHARGE R. BARLAAN
DATE 20130710

LICENSED ARCHITECT SOMESH DEBNATH No. C21523 STATE OF CALIFORNIA

Skanska Shimmick Herzog
1436 California Circle
Milpitas, California 95035
A Joint Venture

Anil Verma Associates, Inc.
1970 Broadway, Suite 525 Oakland, CA 94612
Phone: (510) 835-2537 Fax: (510) 835-2339
SUBMITTED

Lockwood, Andrews & Newnam, Inc. A LOCKWOOD, KONE COMPANY
T·Y·LIN INTERNATIONAL
APPROVED

VTA BART SILICON VALLEY
BART SILICON VALLEY BERRYESSA EXTENSION

LINE, TRACK, STATIONS AND SYSTEMS
DESIGN UNIT 023
MONTAGUE LRT AND MILPITAS POC

LRT SECTIONS
SHEET 3 OF 3

CADD FILENAME C700–S–DB–A938.dwg
SIZE D | SCALE 1/8"=1'–0"
CONTRACT NO. C700 | REV. 0
AREA CODE DB | SHEET NO. A938 | PAGE NO. 0633

JosephG Jun 26, 2013 – 12:13pm G:\Current Projects\VTA-Berryessa Extension Project\Station – Milpitas\CAD\Drawings Out\13-0710 C700 MS LRT_POC – RFC Submittal\MS C700-S-DB-A938.dwg

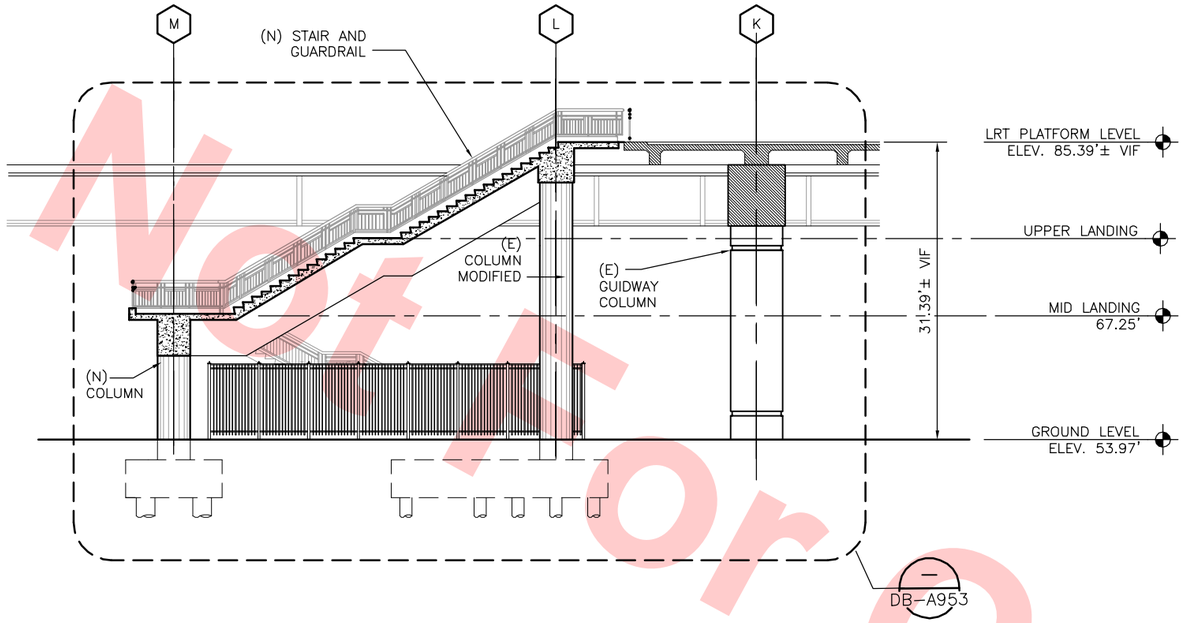

LRT EMERGENCY EXIT STAIR SECTION A
SCALE: 1/8"=1'-0"
DB-A939 DB-A915X

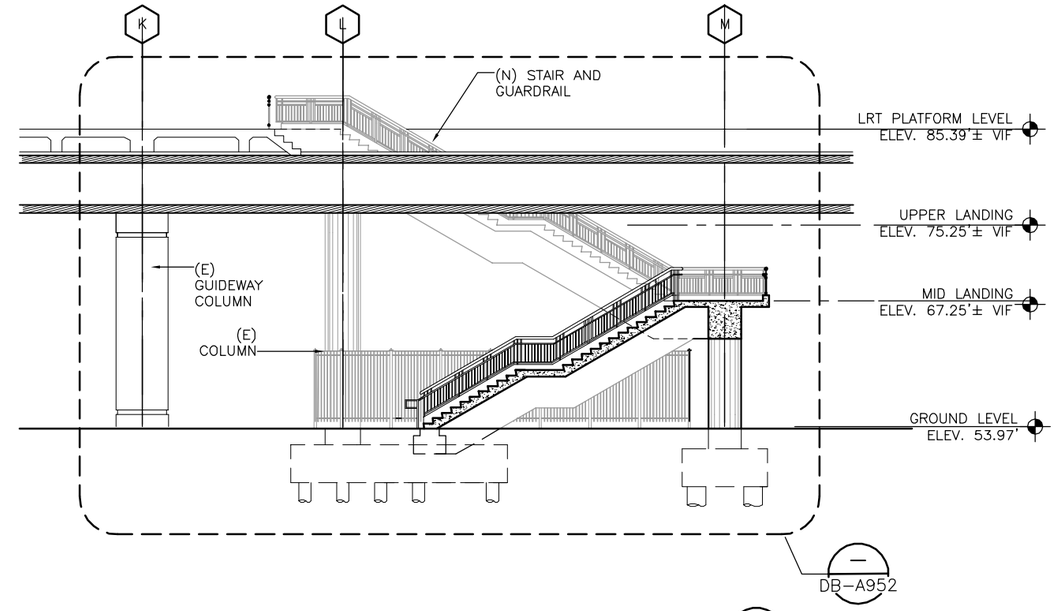

LRT EMERGENCY EXIT STAIR SECTION B
SCALE: 1/8"=1'-0"
DB-A939 DB-A915X

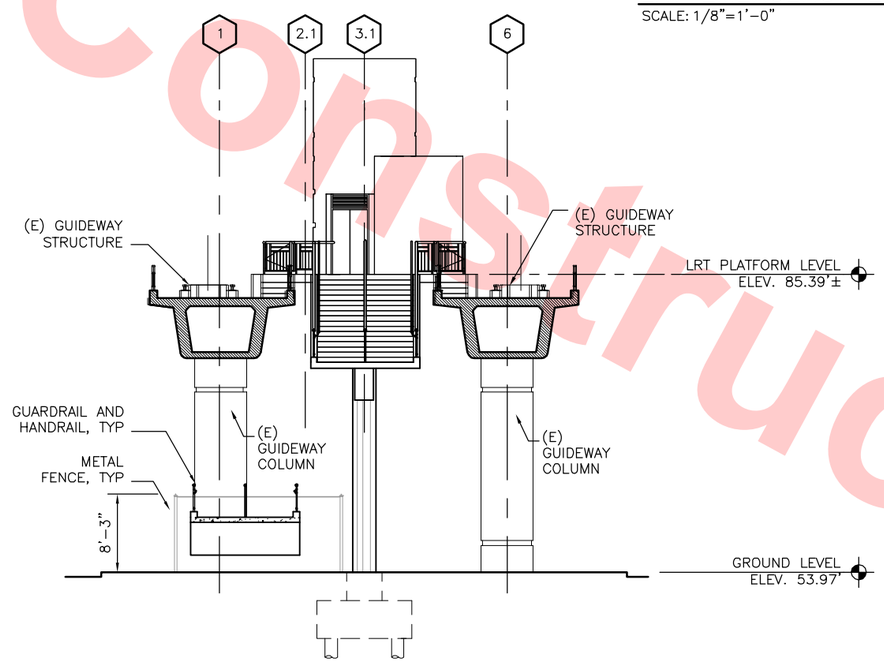

LRT EMERGENCY EXIT STAIR SECTION C
SCALE: 1/8"=1'-0"
DB-A939 DB-A915X

Santa Clara Valley Transportation Authority

____NO EXCEPTIONS TAKEN (NET)
____MAKE CORRECTIONS NOTED (MCN)
____AMEND AND RESUBMIT (A/R)

Any action shown above is subject to the terms of the contract and does not relieve the Contractor of any of its obligations under the contract, including design and detailing.

Contract No.: DB11002F

By: _____ Date: _____

8' 0' 8' 16'
GRAPHIC SCALE

Not For Construction

REV	DATE	BY	SUB	APP	DESCRIPTION
0	20130710				READINESS FOR CONSTRUCTION

DESIGNED BY S. SOPORI
DRAWN BY K. STEPANIAN
CHECKED BY S. DEBNATH
IN CHARGE R. BARLAAN
DATE 20130710

LICENSED ARCHITECT SOMESH DEBNATH No. C21523 STATE OF CALIFORNIA

Skanska Shimmick Herzog
1436 California Circle Milpitas, California 95035
A Joint Venture

Anil Verma Associates, Inc.
1970 Broadway, Suite 525, Oakland, CA 94612
Phone: (510) 835-2537 Fax: (510) 835-2339
SUBMITTED

Lockwood, Andrews & Newnam, Inc. A LAN & RAIN COMPANY
T-Y-LIN INTERNATIONAL
APPROVED

VTA BART SILICON VALLEY
BART SILICON VALLEY BERRYESSA EXTENSION

LINE, TRACK, STATIONS AND SYSTEMS DESIGN UNIT 023
MONTAGUE LRT AND MILPITAS POC

LRT EMERGENCY EXIT STAIR SECTIONS

CADD FILENAME C700-S-DB-A939.dwg
SIZE D | SCALE 1/8"=1'-0"
CONTRACT NO. C700 | REV. 0
AREA CODE DB | SHEET NO. A939 | PAGE NO. 0634

Jun 26, 2013 – 12:14pm G:\Current Projects\VTA-Berryessa Extension Project\Station – Milpitas\CAD\Drawings Out\13-0710 C700 MS LRT_POC – RFC Submittal\MS C700-S-DB-A939.dwg
JosephG

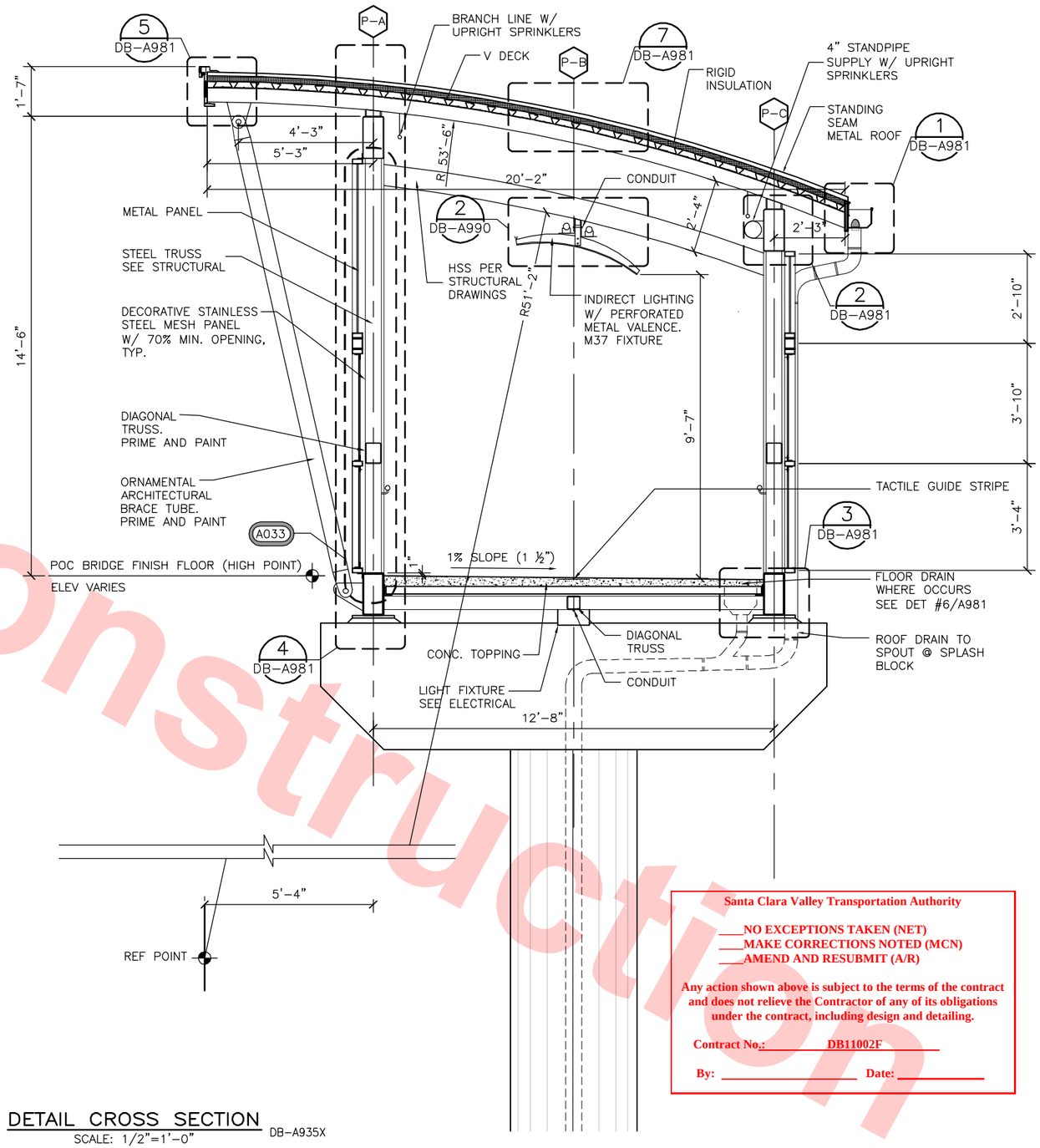

DETAIL CROSS SECTION

SCALE: 1/2"=1'–0"

DB–A935X

Santa Clara Valley Transportation Authority

____NO EXCEPTIONS TAKEN (NET)
____MAKE CORRECTIONS NOTED (MCN)
____AMEND AND RESUBMIT (A/R)

Any action shown above is subject to the terms of the contract and does not relieve the Contractor of any of its obligations under the contract, including design and detailing.

Contract No.: DB11002F

By: _____ Date: _____

Not For Construction

REV	DATE	BY	SUB	APP	DESCRIPTION
0	20130710				READINESS FOR CONSTRUCTION

DESIGNED BY S. SOPORI
DRAWN BY K. STEPANIAN
CHECKED BY S. DEBNATH
IN CHARGE R. BARLAAN
DATE 20130710

LICENSED ARCHITECT DINESH DEBNATH No. C21523 STATE OF CALIFORNIA

Skanska Shimmick Herzog
1436 California Circle
Milpitas, California 95035
A Joint Venture

Anil Verma Associates, Inc.
1970 Broadway, Suite 525 Oakland, CA 94612
Phone: (510) 835-2537 Fax: (510) 535-2339

SUBMITTED

Lockwood, Andrews & Newnam, Inc. A CH2M HILL COMPANY
T·Y·LIN INTERNATIONAL

APPROVED

VTA BART SILICON VALLEY

BART SILICON VALLEY BERRYESSA EXTENSION

LINE, TRACK, STATIONS AND SYSTEMS
DESIGN UNIT 023
MONTAGUE LRT AND MILPITAS POC

POC DETAIL CROSS SECTION

CADD FILENAME C700–S–DB–A940.dwg
SIZE D | SCALE 1/2"=1'–0"
CONTRACT NO. C700 | REV. 0
AREA CODE DB | SHEET NO. A940 | PAGE NO. 0635

JosephG Jun 26, 2013 – 12:14pm G:\Current Projects\VTA–Berryessa Extension Project\Station – Milpitas\CAD\Drawings Out\13–0710 C700 MS LRT_POC – RFC Submittal\MS C700–S–DB–A940.dwg

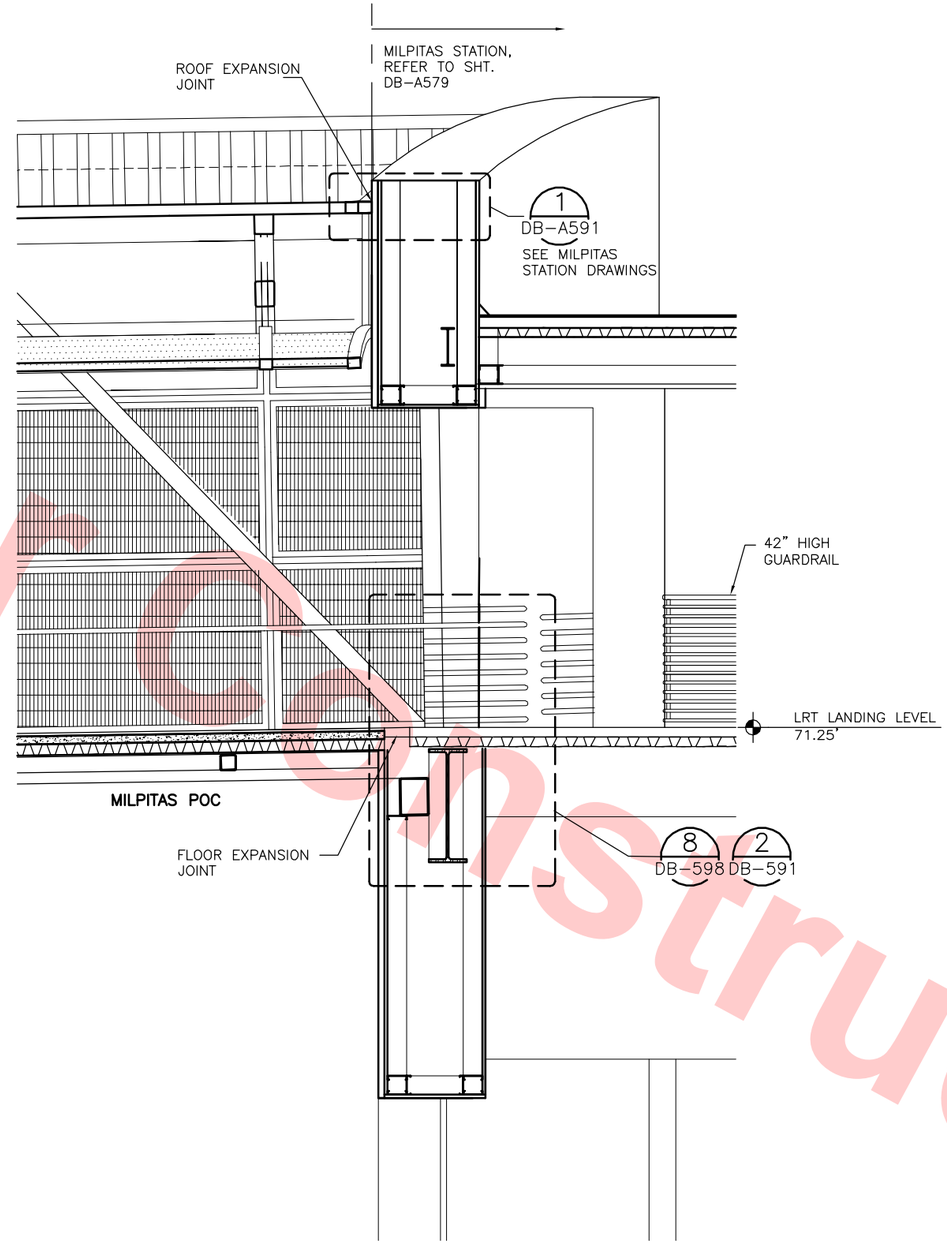

DETAIL CROSS SECTION

SCALE: 1/2"=1'-0"

DB-A911
DB-A912
DB-A913

Santa Clara Valley Transportation Authority

____NO EXCEPTIONS TAKEN (NET)
____MAKE CORRECTIONS NOTED (MCN)
____AMEND AND RESUBMIT (A/R)

Any action shown above is subject to the terms of the contract and does not relieve the Contractor of any of its obligations under the contract, including design and detailing.

Contract No.: DB11002F

By: _____ Date: _____

Not For Construction

REV	DATE	BY	SUB	APP	DESCRIPTION
0	20130710				READINESS FOR CONSTRUCTION

DESIGNED BY S. SOPORI
DRAWN BY K. STEPANIAN
CHECKED BY S. DEBNATH
IN CHARGE R. BARLAAN
DATE 20130710

LICENSED ARCHITECT SOMESH DEBNATH No. C21523 STATE OF CALIFORNIA

Skanska Shimmick Herzog
1436 California Circle
Milpitas, California 95035
A Joint Venture

Anil Verma Associates, Inc.
1970 Broadway, Suite 525 Oakland, CA 94612
Phone: (510) 835-2537 Fax: (510) 835-2339

Lockwood, Andrews & Newnam, Inc. A LEO A DALY COMPANY

T·Y·LIN INTERNATIONAL

SUBMITTED _____

APPROVED _____

VTA BART SILICON VALLEY

BART SILICON VALLEY BERRYESSA EXTENSION

LINE, TRACK, STATIONS AND SYSTEMS
DESIGN UNIT 023
MONTAGUE LRT AND MILPITAS POC
POC DETAIL SECTIONS

SHEET 1 OF 2

CADD FILENAME C700-S-DB-A941.dwg
SIZE D | SCALE 1/2"=1'-0"
CONTRACT NO. C700 | REV. 0
AREA CODE DB | SHEET NO. A941 | PAGE NO. 0636

JosephG Jun 26, 2013 - 12:14pm G:\Current Projects\VTA-Berryessa Extension Project\Station - Milpitas\CAD\Drawings Out\13-0710 C700 MS LRT_POC - RFC Submittal\MS C700-S-DB-A941.dwg

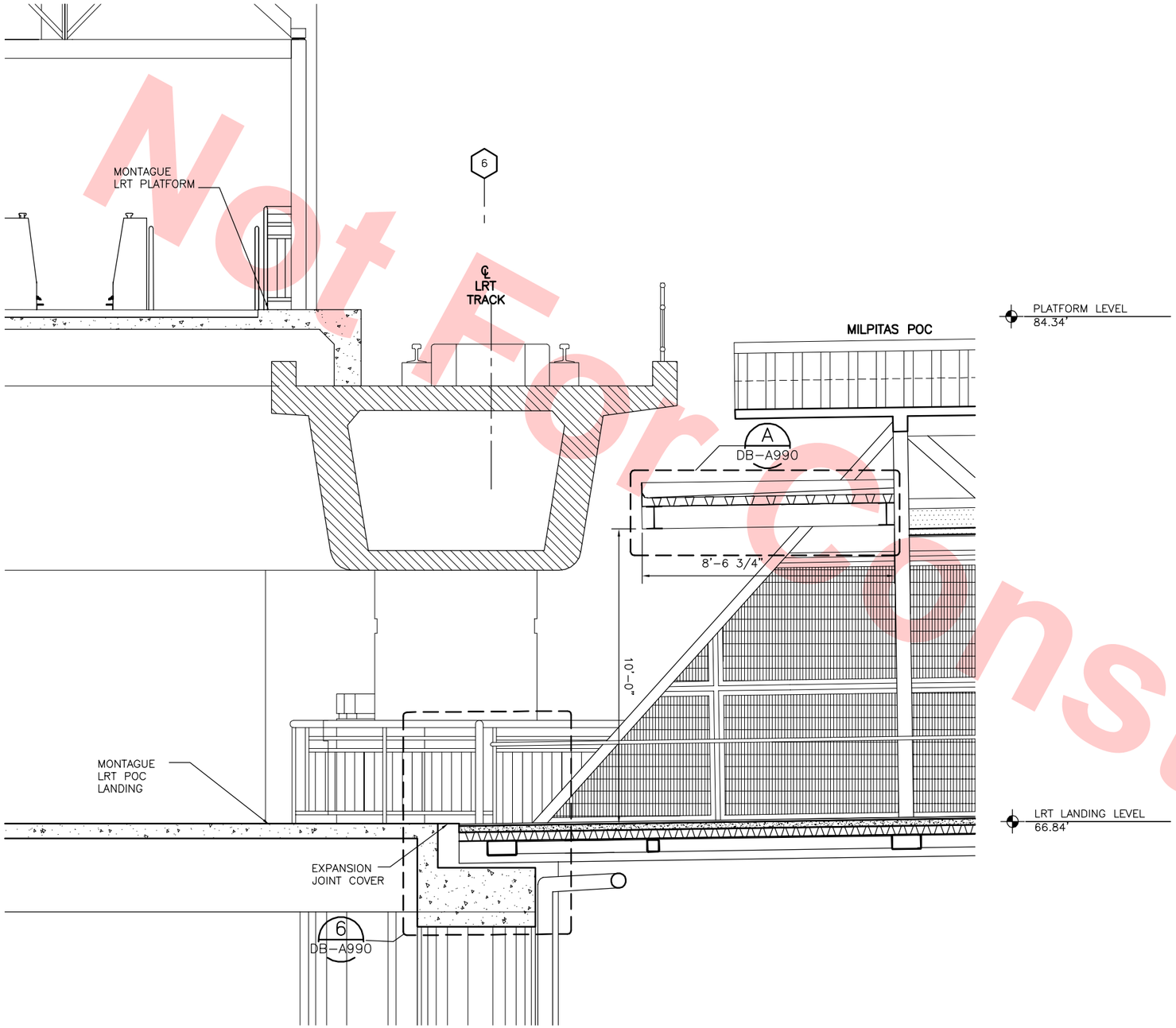

DETAIL CROSS SECTION

SCALE: 1/2"=1'–0"

DB–A911
DB–A912
DB–A913

Santa Clara Valley Transportation Authority

____NO EXCEPTIONS TAKEN (NET)
____MAKE CORRECTIONS NOTED (MCN)
____AMEND AND RESUBMIT (A/R)

Any action shown above is subject to the terms of the contract and does not relieve the Contractor of any of its obligations under the contract, including design and detailing.

Contract No.: DB11002F

By: _____ **Date:** _____

Not For Construction

REV	DATE	BY	SUB	APP	DESCRIPTION
0	20130710				READINESS FOR CONSTRUCTION

DESIGNED BY S. SOPORI
DRAWN BY K. STEPANIAN
CHECKED BY A. DEBNATH
IN CHARGE R. BARLAAN
DATE 20130710

LICENSED ARCHITECT DEBNATH No. C21523 STATE OF CALIFORNIA

Skanska Shimmick Herzog
1436 California Circle
Milpitas, California 95035
A Joint Venture

Anil Verma Associates, Inc.
1970 Broadway, Suite 525, Oakland, CA 94612
Phone: (510) 835-2537 Fax: (510) 535-2339

Lockwood, Andrews & Newnam, Inc. A LAN & DALY COMPANY
T·Y·LIN INTERNATIONAL

SUBMITTED _____ APPROVED _____

VTA BART SILICON VALLEY
BART SILICON VALLEY BERRYESSA EXTENSION

LINE, TRACK, STATIONS AND SYSTEMS
DESIGN UNIT 023
MONTAGUE LRT AND MILPITAS POC

POC DETAIL SECTIONS
SHEET 2 OF 2

CADD FILENAME C700–S–DB–A942.dwg
SIZE D | SCALE 1/2"=1'–0"
CONTRACT NO. C700 | REV. 0
AREA CODE DB | SHEET NO. A942 | PAGE NO. 0637

JosephG Jun 26, 2013 – 12:15pm G:\Current Projects\VTA–Berryessa Extension Project\Station – Milpitas\CAD\Drawings Out\13–0710 C700 MS LRT_POC – RFC Submittal\MS C700–S–DB–A942.dwg

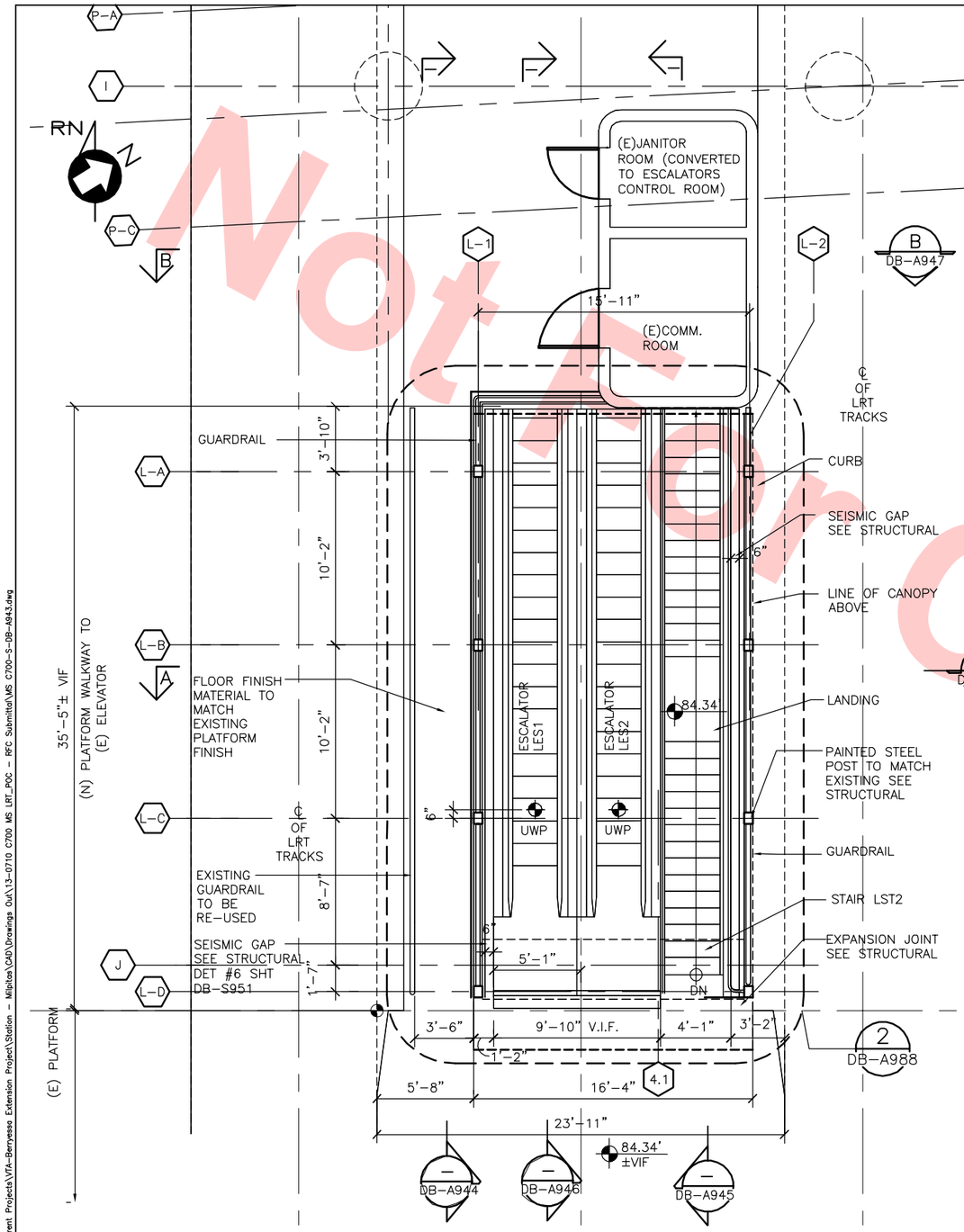

PLATFORM LEVEL DETAIL PLAN 1
SCALE: 1/4"=1'-0"

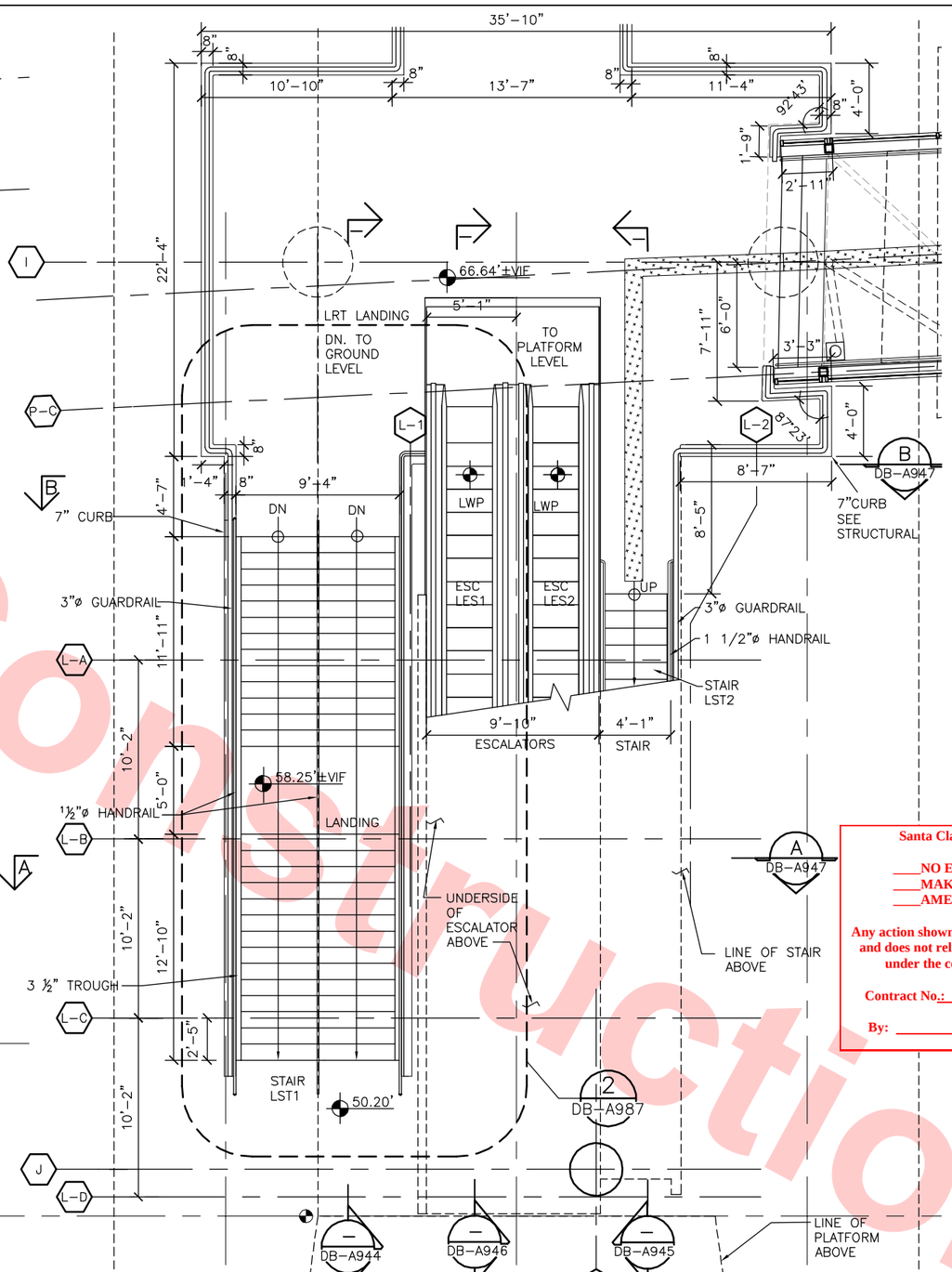

LRT BRIDGE LEVEL DETAIL PLAN 2
SCALE: 1/4"=1'-0"

4' 0' 4' 8'
GRAPHIC SCALE

Santa Clara Valley Transportation Authority

____NO EXCEPTIONS TAKEN (NET)
____MAKE CORRECTIONS NOTED (MCN)
____AMEND AND RESUBMIT (A/R)

Any action shown above is subject to the terms of the contract and does not relieve the Contractor of any of its obligations under the contract, including design and detailing.

Contract No.: DB11002F

By: _____ **Date:** _____

Not For Construction

REV	DATE	BY	SUB	APP	DESCRIPTION
0	20130710				READINESS FOR CONSTRUCTION

DESIGNED BY S. SOPORI
DRAWN BY K. STEPANIAN
CHECKED BY S. DEBNATH
IN CHARGE R. BARLAAN
DATE 20130710

LICENSED ARCHITECT SOMESH DEBNATH No. C21523 STATE OF CALIFORNIA

Skanska Shimmick Herzog
1436 California Circle
Milpitas, California 95035
A Joint Venture

Anil Verma Associates, Inc.
1970 Broadway, Suite 555, Oakland, CA 94612
Phone: (510) 835-2537 Fax: (510) 535-2339

SUBMITTED

Lockwood, Andrews & Newnam, Inc. A LEO A DALY COMPANY
T·Y·LIN INTERNATIONAL

APPROVED

VTA BART SILICON VALLEY
BART SILICON VALLEY BERRYESSA EXTENSION

LINE, TRACK, STATIONS AND SYSTEMS DESIGN UNIT 023
MONTAGUE LRT AND MILPITAS POC

LRT STAIR AND ESCALATORS
PLATFORM & LRT BRIDGE LEVEL DETAIL PLANS

CADD FILENAME C700-S-DB-A943.dwg
SIZE D | SCALE 1/4"=1'-0"
CONTRACT NO. C700 | REV. 0
AREA CODE DB | SHEET NO. A943 | PAGE NO. 0638

JosephC Jun 26, 2013 - 12:15pm G:\Current Projects\VTA-Berryessa Extension Project\Station - Milpitas\CAD\Drawings Out\13-0710 C700 MS LRT_POC - RFC Submittal\MS C700-S-DB-A943.dwg

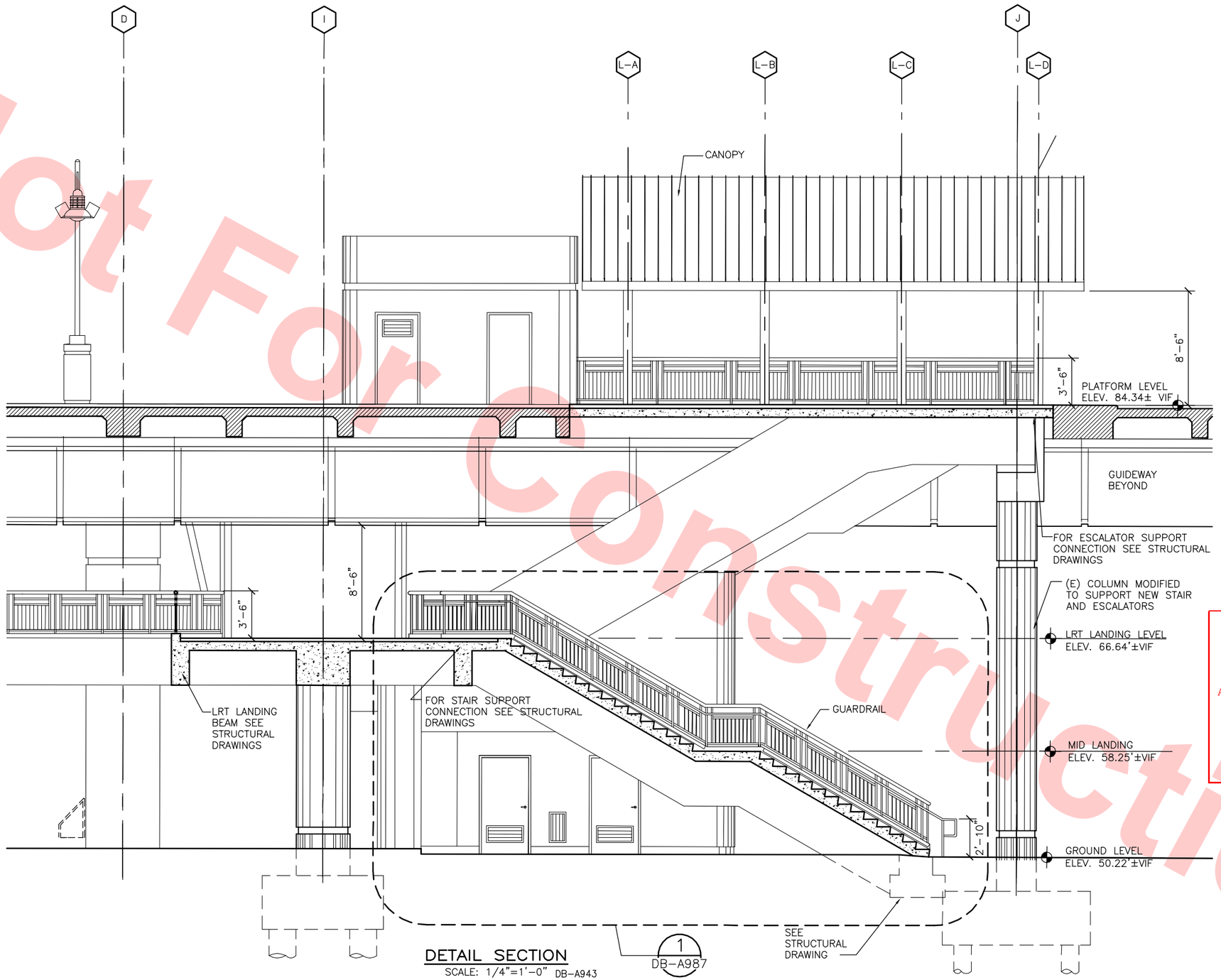

DETAIL SECTION
SCALE: 1/4"=1'-0" DB-A943

4' 0' 4' 8'
GRAPHIC SCALE

Santa Clara Valley Transportation Authority

____NO EXCEPTIONS TAKEN (NET)
____MAKE CORRECTIONS NOTED (MCN)
____AMEND AND RESUBMIT (A/R)

Any action shown above is subject to the terms of the contract and does not relieve the Contractor of any of its obligations under the contract, including design and detailing.

Contract No.: DB11002F

By: _____ Date: _____

Not For Construction

REV	DATE	BY	SUB	APP	DESCRIPTION
0	20130710				READINESS FOR CONSTRUCTION

DESIGNED BY S. SOPORI
DRAWN BY K. STEPANIAN
CHECKED BY S. DEBNATH
IN CHARGE R. BARLAAN
DATE 20130710

LICENSED ARCHITECT SOMESH DEBNATH No. C21523 STATE OF CALIFORNIA

Skanska Shimmick Herzog
1436 California Circle
Milpitas, California 95035
A Joint Venture

Anil Verma Associates, Inc.
1970 Broadway, Suite 325 Oakland, CA 94612
Phone: (510) 835-2537 Fax: (510) 835-2339

Lockwood, Andrews & Newnam, Inc. A LEO A DALY COMPANY

T·Y·LIN INTERNATIONAL

SUBMITTED _____ APPROVED _____

VTA BART SILICON VALLEY
BART SILICON VALLEY BERRYESSA EXTENSION

LINE, TRACK, STATIONS AND SYSTEMS
DESIGN UNIT 023
MONTAGUE LRT AND MILPITAS POC

LRT STAIR LST1
DETAIL SECTION

CADD FILENAME C700-S-DB-A944.dwg
SIZE D | SCALE 1/4"=1'-0"
CONTRACT NO. C700 | REV. 0
AREA CODE DB | SHEET NO. A944 | PAGE NO. 0639

JosephG Jun 26, 2013 – 12:15pm G:\Current Projects\VTA-Berryessa Extension Project\Station – Milpitas\CAD\Drawings Out\13-0710 C700 MS LRT_POC – RFC Submittal\MS C700-S-DB-A944.dwg

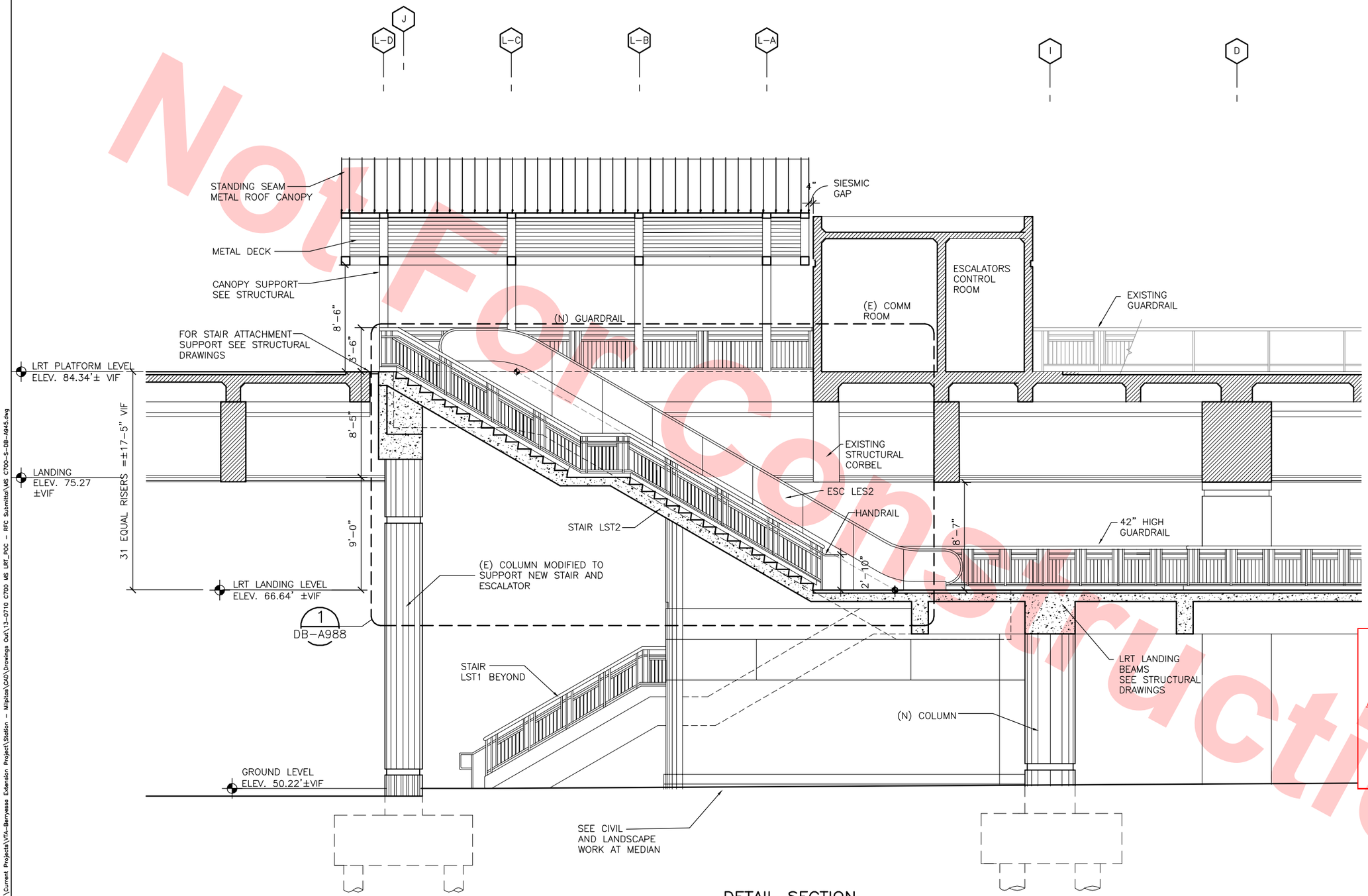

DETAIL SECTION

SCALE: 1/4"=1'-0" DB-A936 DB-A943

4' 0' 4' 8'

GRAPHIC SCALE

Santa Clara Valley Transportation Authority

____NO EXCEPTIONS TAKEN (NET)
____MAKE CORRECTIONS NOTED (MCN)
____AMEND AND RESUBMIT (A/R)

Any action shown above is subject to the terms of the contract and does not relieve the Contractor of any of its obligations under the contract, including design and detailing.

Contract No.: DB11002F

By: _____ Date: _____

Not For Construction

REV	DATE	BY	SUB	APP	DESCRIPTION
0	20130710				READINESS FOR CONSTRUCTION

DESIGNED BY S. SOPORI
DRAWN BY K. STEPANIAN
CHECKED BY S. DEBNATH
IN CHARGE R. BARLAAN
DATE 20130710

LICENSED ARCHITECT SOMESH DEBNATH No. C21523 STATE OF CALIFORNIA

Skanska Shimmick Herzog
1436 California Circle
Milpitas, California 95035
A Joint Venture

Anil Verma Associates, Inc.
1970 Broadway, Suite 525, Oakland, CA 94612
Phone: (510) 835-2537 Fax: (510) 535-2339

SUBMITTED _____

Lockwood, Andrews & Newnam, Inc. A LEO A DALY COMPANY
T·Y·LIN INTERNATIONAL

APPROVED _____

VTA BART SILICON VALLEY

BART SILICON VALLEY BERRYESSA EXTENSION

LINE, TRACK, STATIONS AND SYSTEMS
DESIGN UNIT 023
MONTAGUE AND LRT MILPITAS POC

LRT STAIR LST 2
DETAIL SECTION

CADD FILENAME C700-S-DB-A945.dwg
SIZE D | SCALE 1/4"=1'-0"
CONTRACT NO. C700 | REV. 0
AREA CODE DB | SHEET NO. A945 | PAGE NO. 0640

JosephG Jun 26, 2013 - 12:16pm G:\Current Projects\VTA-Berryessa Extension Project\Station - Milpitas\CAD\Drawings Out\13-0710 C700 MS LRT_POC - RFC Submittal\MS C700-S-DB-A945.dwg

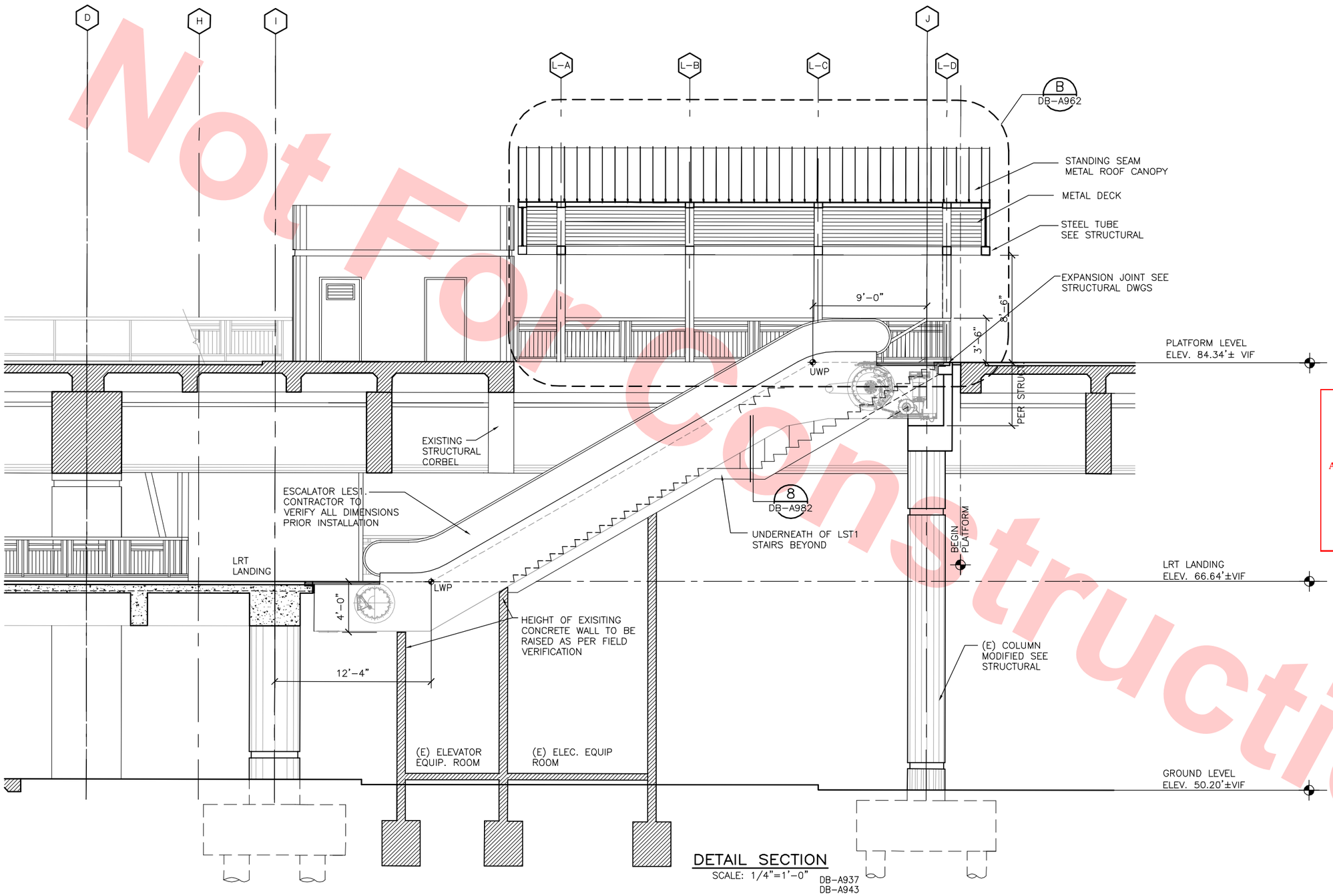

DETAIL SECTION

SCALE: 1/4"=1'-0"

DB-A937
DB-A943

4' 0' 4' 8'

GRAPHIC SCALE

Not For Construction

Santa Clara Valley Transportation Authority

____NO EXCEPTIONS TAKEN (NET)
____MAKE CORRECTIONS NOTED (MCN)
____AMEND AND RESUBMIT (A/R)

Any action shown above is subject to the terms of the contract and does not relieve the Contractor of any of its obligations under the contract, including design and detailing.

Contract No.: DB11002F

By: _____ Date: _____

REV	DATE	BY	SUB	APP	DESCRIPTION
0	20130710				READINESS FOR CONSTRUCTION

DESIGNED BY S. SOPORI
DRAWN BY K. STEPANIAN
CHECKED BY S. DEBNATH
IN CHARGE R. BARLAAN
DATE 20130710

LICENSED ARCHITECT SANJEEV DEBNATH No. C21523 STATE OF CALIFORNIA

Skanska Shimmick Herzog
1436 California Circle
Milpitas, California 95035
A Joint Venture

Anil Verma Associates, Inc.
1970 Broadway, Suite 425 Oakland, CA 94612
Phone: (510) 835-2537 Fax: (510) 835-2339

SUBMITTED

Lockwood, Andrews & Newnam, Inc. A CH2M HILL COMPANY
T·Y·LIN INTERNATIONAL

APPROVED

VTA BART SILICON VALLEY

BART SILICON VALLEY BERRYESSA EXTENSION

LINE, TRACK, STATIONS AND SYSTEMS
DESIGN UNIT 023
MONTAGUE LRT AND MILPITAS POC

LRT ESCALATOR LES 1
DETAIL SECTION

CADD FILENAME C700-S-DB-A946.dwg
SIZE D | SCALE 1/4"=1'-0"
CONTRACT NO. C700 | REV. 0
AREA CODE DB | SHEET NO. A946 | PAGE NO. 0641

JosephG Jun 26, 2013 - 12:16pm G:\Current Projects\VTA-Berryessa Extension Project\Station - Milpitas\CAD\Drawings Out\13-0710 C700 MS LRT_POC - RFC Submittal\MS C700-S-DB-A946.dwg

Santa Clara Valley Transportation Authority

____NO EXCEPTIONS TAKEN (NET)
____MAKE CORRECTIONS NOTED (MCN)
____AMEND AND RESUBMIT (A/R)

Any action shown above is subject to the terms of the contract and does not relieve the Contractor of any of its obligations under the contract, including design and detailing.

Contract No.: DB11002F

By: _____ Date: _____

Not For Construction

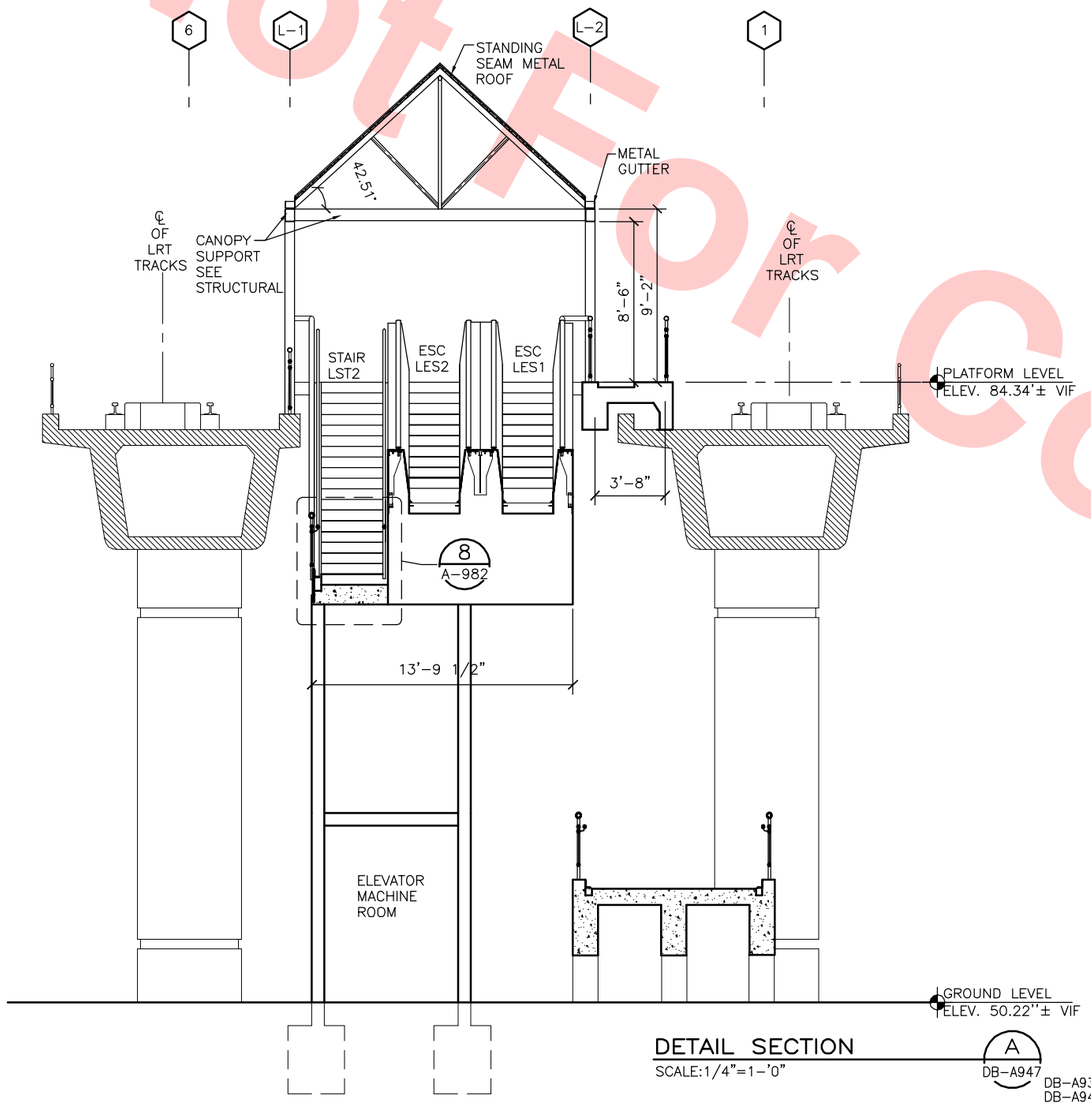

DETAIL SECTION A
SCALE:1/4"=1-'0"
DB-A947
DB-A938
DB-A943

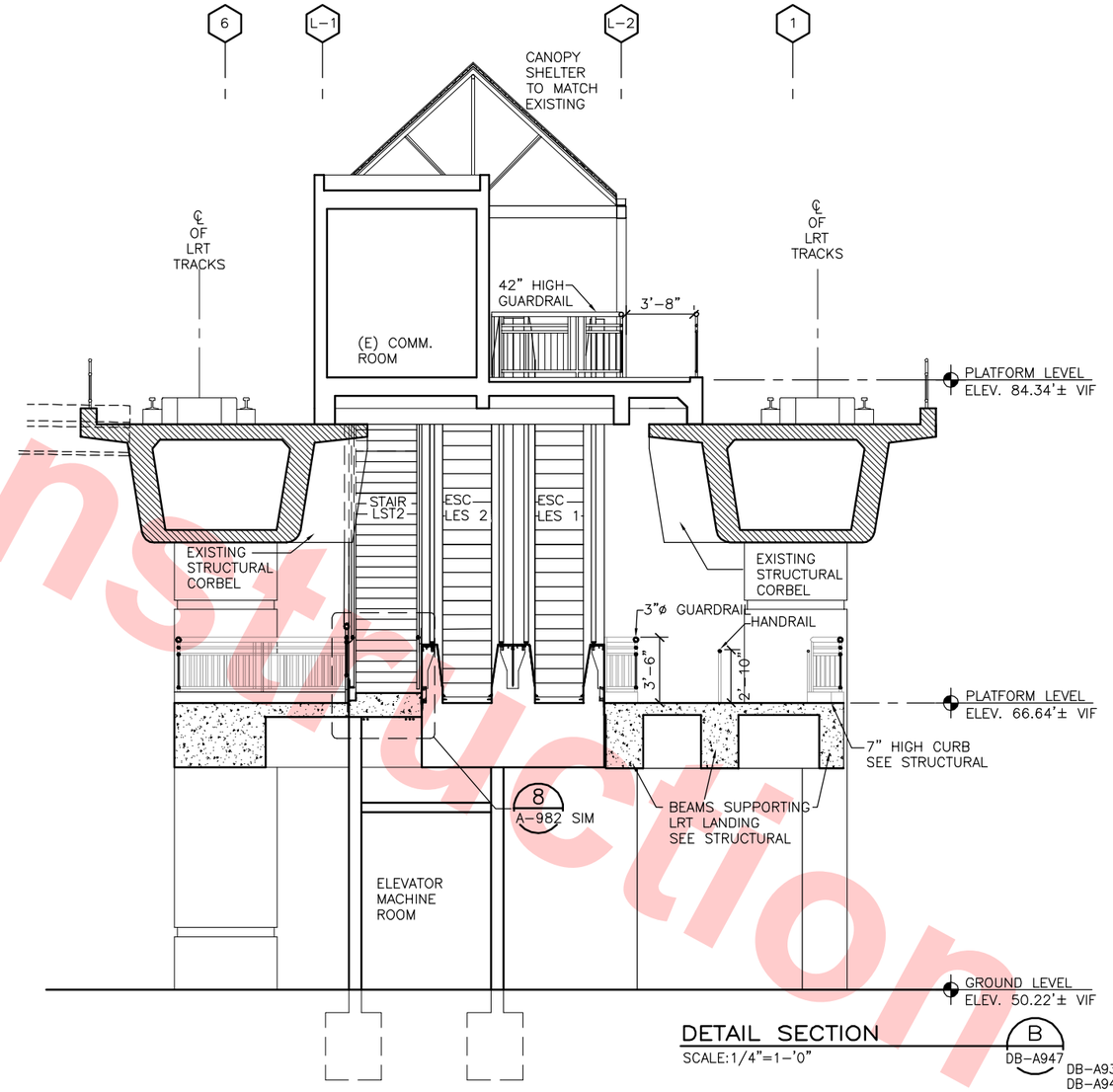

DETAIL SECTION B
SCALE:1/4"=1-'0"
DB-A947
DB-A938
DB-A943

REV	DATE	BY	SUB	APP	DESCRIPTION
0	20130710				READINESS FOR CONSTRUCTION

DESIGNED BY S. SOPORI
DRAWN BY K. STEPANIAN
CHECKED BY S. DEBNATH
IN CHARGE R. BARLAAN
DATE 20130710

LICENSED ARCHITECT SIMESH DEBNATH No. C21523 STATE OF CALIFORNIA

Skanska Shimmick Herzog
1436 California Circle Milpitas, California 95035
A Joint Venture

Anil Verma Associates, Inc.
1970 Broadway, Suite 525, Oakland, CA 94612
Phone: (510) 835-2537 Fax: (510) 835-2339

Lockwood, Andrews & Newnam, Inc. A LEO A DALY COMPANY
T-Y-LIN INTERNATIONAL

SUBMITTED _____
APPROVED _____

VTA BART SILICON VALLEY
BART SILICON VALLEY BERRYESSA EXTENSION

LINE, TRACK, STATIONS AND SYSTEMS DESIGN UNIT 023
MONTAGUE LRT AND MILPITAS POC

ESC LES1, ESC LES1 AND STAIR LST2 DETAIL SECTIONS

CADD FILENAME C700-S-DB-A947.dwg
SIZE D | SCALE 1/4"=1'-0"
CONTRACT NO. C700 | REV. 0
AREA CODE DB | SHEET NO. A947 | PAGE NO. 0642

JosephG Jun 26, 2013 - 12:16pm G:\Current Projects\VTA-Berryessa Extension Project\Station - Milpitas\CAD\Drawings Out\13-0710 C700 MS LRT_POC - RFC Submittal\MS C700-S-DB-A947.dwg

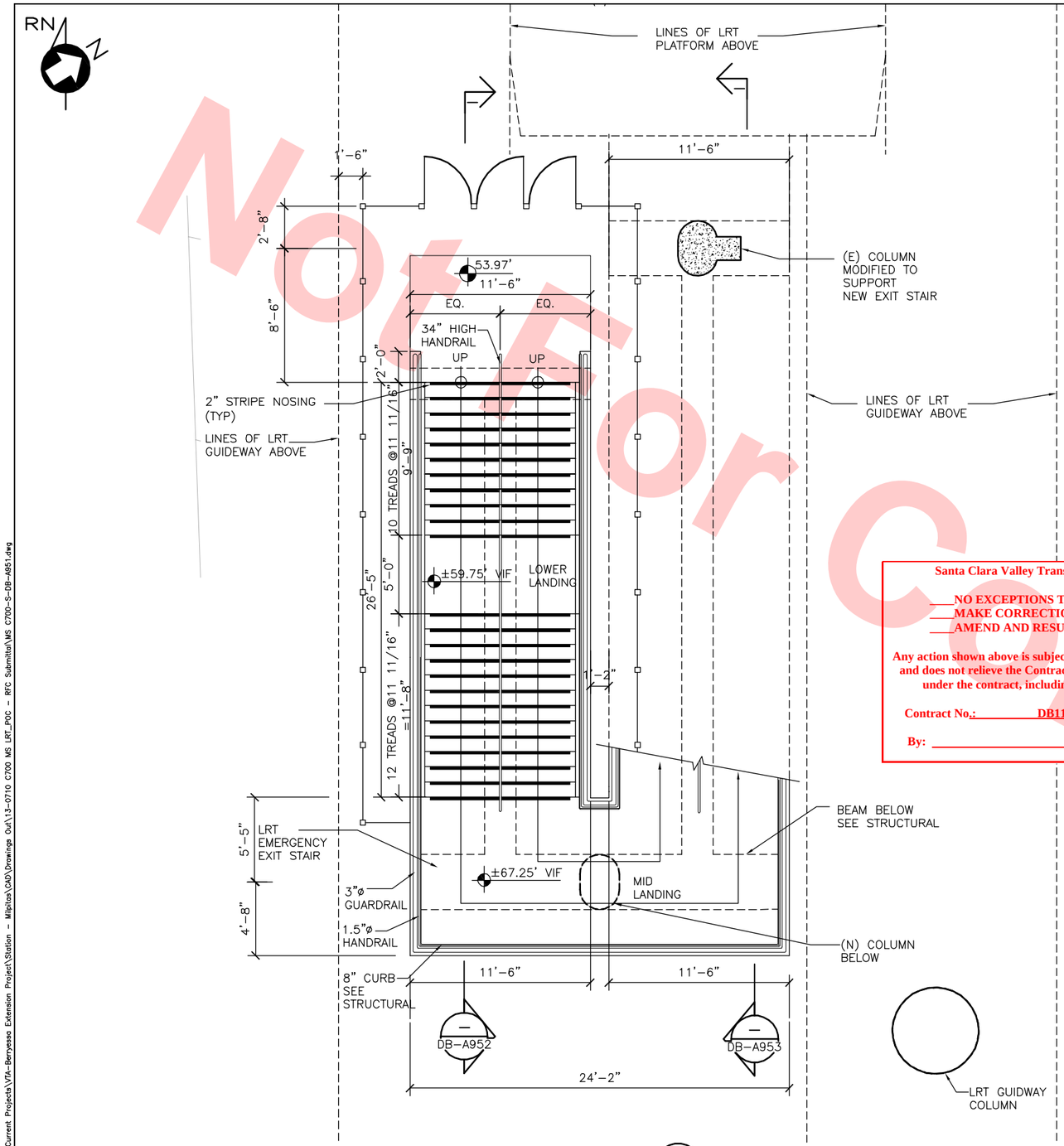

DETAIL PLAN AT MID LANDING (1)
SCALE:1/4"=1'-0"
DB-A951 DB-A915X

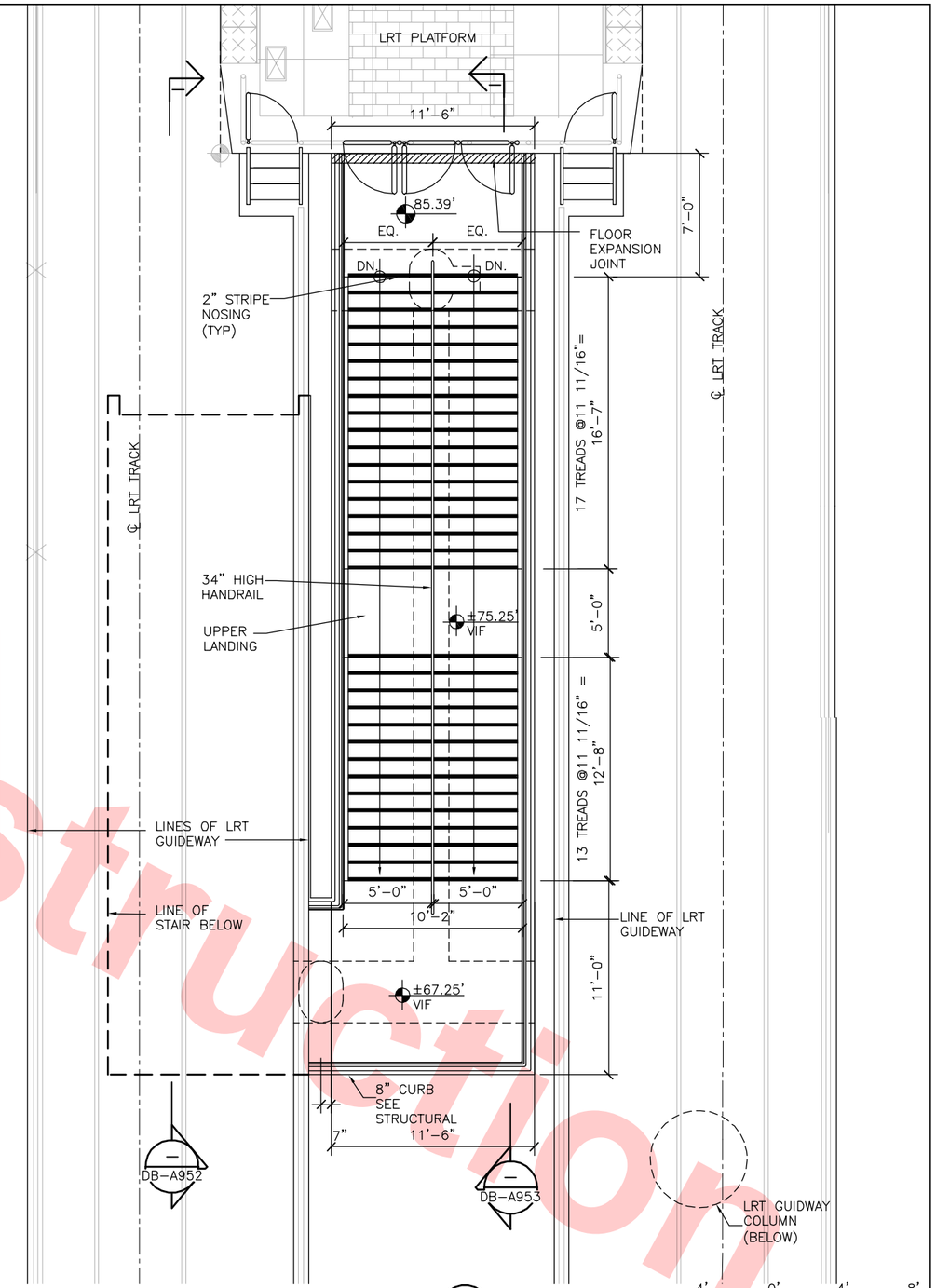

DETAIL PLAN AT LRT PLATFORM (2)
SCALE: 1/4"=1'-0"
DB-A951 DB-A915X

Not For Construction

Santa Clara Valley Transportation Authority

____NO EXCEPTIONS TAKEN (NET)
____MAKE CORRECTIONS NOTED (MCN)
____AMEND AND RESUBMIT (A/R)

Any action shown above is subject to the terms of the contract and does not relieve the Contractor of any of its obligations under the contract, including design and detailing.

Contract No.: DB11002F

By: _____ Date: _____

REV	DATE	BY	SUB	APP	DESCRIPTION
0	20130710				READINESS FOR CONSTRUCTION

DESIGNED BY S. SOPORI
DRAWN BY K. STEPANIAN
CHECKED BY S. DEBNATH
IN CHARGE R. BARLAAN
DATE 20130710

LICENSED ARCHITECT SUMESH DEBNATH No. C21523 STATE OF CALIFORNIA

Skanska Shimmick Herzog
1436 California Circle
Milpitas, California 95035
A Joint Venture

Anil Verma Associates, Inc.
1970 Broadway, Suite 525, Oakland, CA 94612
Phone: (510) 835-2537 Fax: (510) 835-2339
SUBMITTED

Lockwood, Andrews & Newnam, Inc. A LEO A DALY COMPANY
T·Y·LIN INTERNATIONAL
APPROVED

VTA BART SILICON VALLEY
BART SILICON VALLEY BERRYESSA EXTENSION

LINE, TRACK, STATIONS AND SYSTEMS DESIGN UNIT 023
MONTAGUE LRT AND MILPITAS POC

LRT EMERGENCY EXIT STAIRS
DETAIL PLANS

CADD FILENAME C700-S-DB-A951.dwg
SIZE D | SCALE 1/4"=1'-0"
CONTRACT NO. C700 | REV. 0
AREA CODE DB | SHEET NO. A951 | PAGE NO. 0643

JosephG Jun 26, 2013 - 12:16pm G:\Current Projects\VTA-Berryessa Extension Project\Station - Milpitas\CAD\Drawings Out\13-0710 C700 MS LRT_POC - RFC Submittal\MS C700-S-DB-A951.dwg

Not For Construction

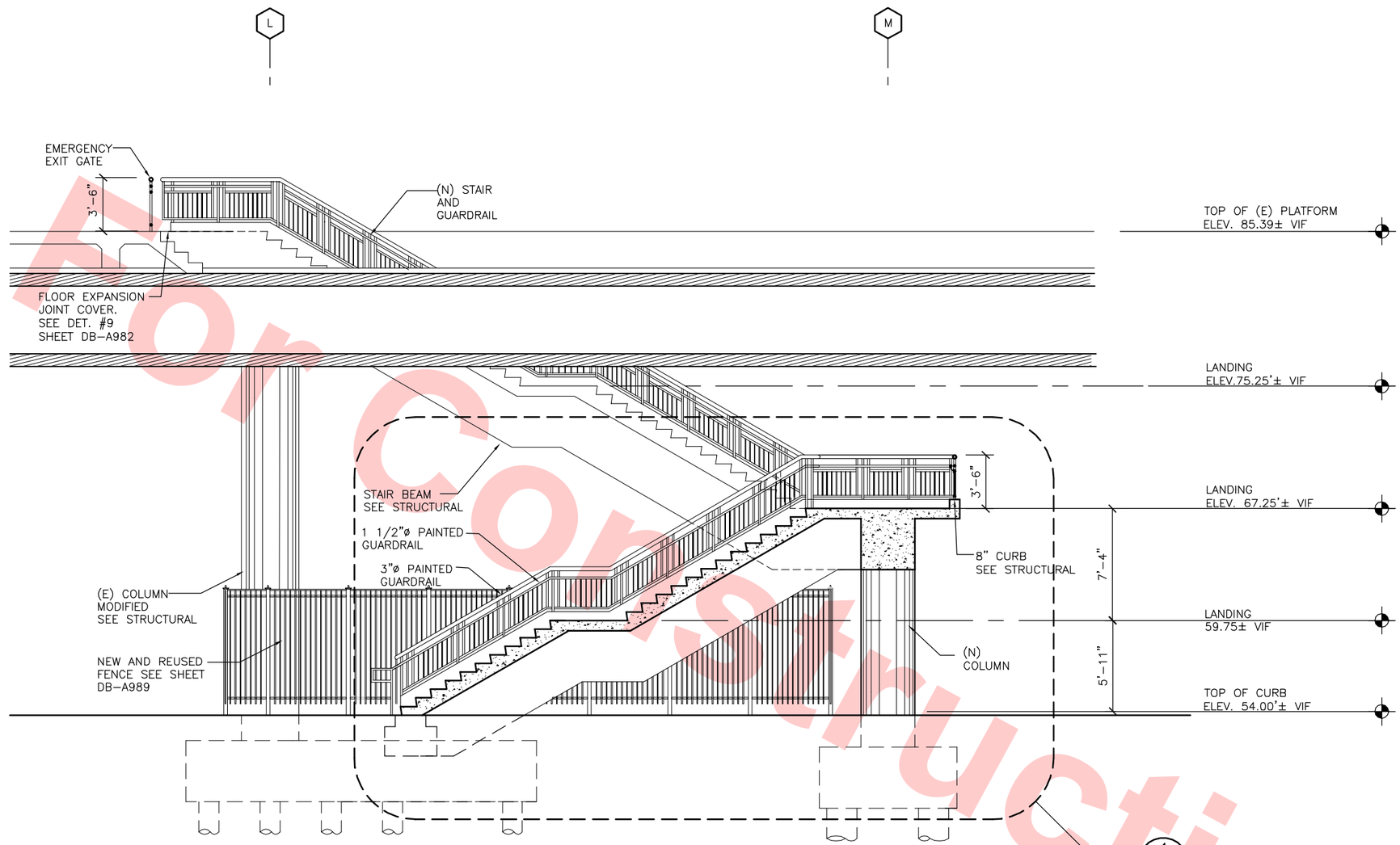

DETAIL SECTION A
SCALE: 1/4"=1-'0"
DB-A952 DB-A939 DB-A951

Santa Clara Valley Transportation Authority

____NO EXCEPTIONS TAKEN (NET)
____MAKE CORRECTIONS NOTED (MCN)
____AMEND AND RESUBMIT (A/R)

Any action shown above is subject to the terms of the contract and does not relieve the Contractor of any of its obligations under the contract, including design and detailing.

Contract No.: DB11002F

By: _____ **Date:** _____

4' 0' 4' 16'
GRAPHIC SCALE

REV	DATE	BY	SUB	APP	DESCRIPTION
0	20130710				READINESS FOR CONSTRUCTION

DESIGNED BY S. SOPORI
DRAWN BY K. STEPANIAN
CHECKED BY S. DEBNATH
IN CHARGE R. BARLAAN
DATE 20130710

LICENSED ARCHITECT SOMESH DEBNATH No. C21523 STATE OF CALIFORNIA

Skanska Shimmick Herzog
1436 California Circle
Milpitas, California 95035
A Joint Venture

Anil Verma Associates, Inc.
1970 Broadway, Suite 525 Oakland, CA 94612
Phone: (510) 835-2537 Fax: (510) 835-2339
SUBMITTED

Lockwood, Andrews & Newnam, Inc. A LBG & BALL COMPANY
T·Y·LIN INTERNATIONAL
APPROVED

VTA BART SILICON VALLEY
BART SILICON VALLEY BERRYESSA EXTENSION

LINE, TRACK, STATIONS AND SYSTEMS DESIGN UNIT 023
MONTAGUE LRT AND MILPITAS POC

LRT EMERGENCY EXIT STAIRS
DETAIL SECTION, SHEET 1 OF 2

CADD FILENAME C700-S-DB-A952.dwg
SIZE D | SCALE 1/4"=1'-0"
CONTRACT NO. C700 | REV. 0
AREA CODE DB | SHEET NO. A952 | PAGE NO. 0644

JosephG Jun 26, 2013 - 12:17pm G:\Current Projects\VTA-Berryessa Extension Project\Station - Milpitas\CAD\Drawings Out\13-0710 C700 MS LRT_POC - RFC Submittal\MS C700-S-DB-A952.dwg

Not For Construction

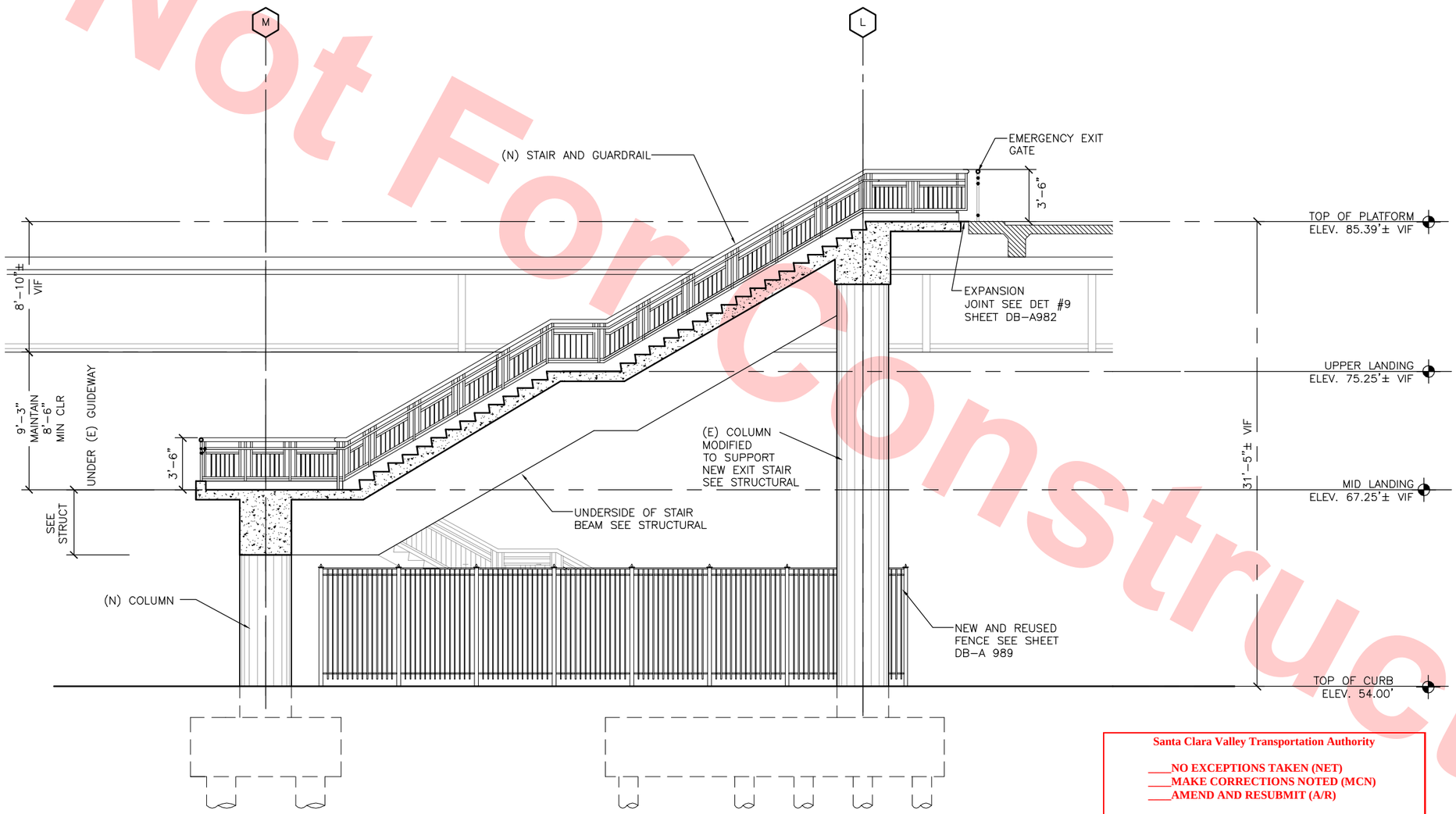

DETAIL SECTION

SCALE: 1/4"=1'-0"

DB-A939
DB-A951

Santa Clara Valley Transportation Authority

____NO EXCEPTIONS TAKEN (NET)
____MAKE CORRECTIONS NOTED (MCN)
____AMEND AND RESUBMIT (A/R)

Any action shown above is subject to the terms of the contract and does not relieve the Contractor of any of its obligations under the contract, including design and detailing.

Contract No.: DB11002F

By: _____ **Date:** _____

4' 0' 4' 16'

GRAPHIC SCALE

REV	DATE	BY	SUB	APP	DESCRIPTION
0	20130710				READINESS FOR CONSTRUCTION

DESIGNED BY S. SOPORI
DRAWN BY K. STEPANIAN
CHECKED BY S. DEBNATH
IN CHARGE R. BARLAAN
DATE 20130710

LICENSED ARCHITECT SANJEEV DEBNATH No. C21523 STATE OF CALIFORNIA

Skanska Shimmick Herzog
1436 California Circle
Milpitas, California 95035
A Joint Venture

Anil Verma Associates, Inc.
1970 Broadway, Suite 525 Oakland, CA 94612
Phone: (510) 835-2537 Fax: (510) 835-2339

Lockwood, Andrews & Newnam, Inc. A CH2M HILL COMPANY
T·Y·LIN INTERNATIONAL

SUBMITTED _____ APPROVED _____

VTA BART SILICON VALLEY
BART SILICON VALLEY BERRYESSA EXTENSION

LINE, TRACK, STATIONS AND SYSTEMS
DESIGN UNIT 023
MONTAGUE LRT AND MILPITAS POC

LRT EMERGENCY EXIT STAIRS
DETAIL SECTION, SHEET 2 OF 2

CADD FILENAME C700-S-DB-A953.dwg
SIZE D | SCALE 1/4"=1'-0"
CONTRACT NO. C700 | REV. 0
AREA CODE DB | SHEET NO. A953 | PAGE NO. 0645

JosephG Jun 26, 2013 – 12:17pm G:\Current Projects\VTA-Berryessa Extension Project\Station – Milpitas\CAD\Drawings Out\13-0710 C700 MS LRT_POC – RFC Submittal\MS C700-S-DB-A953.dwg

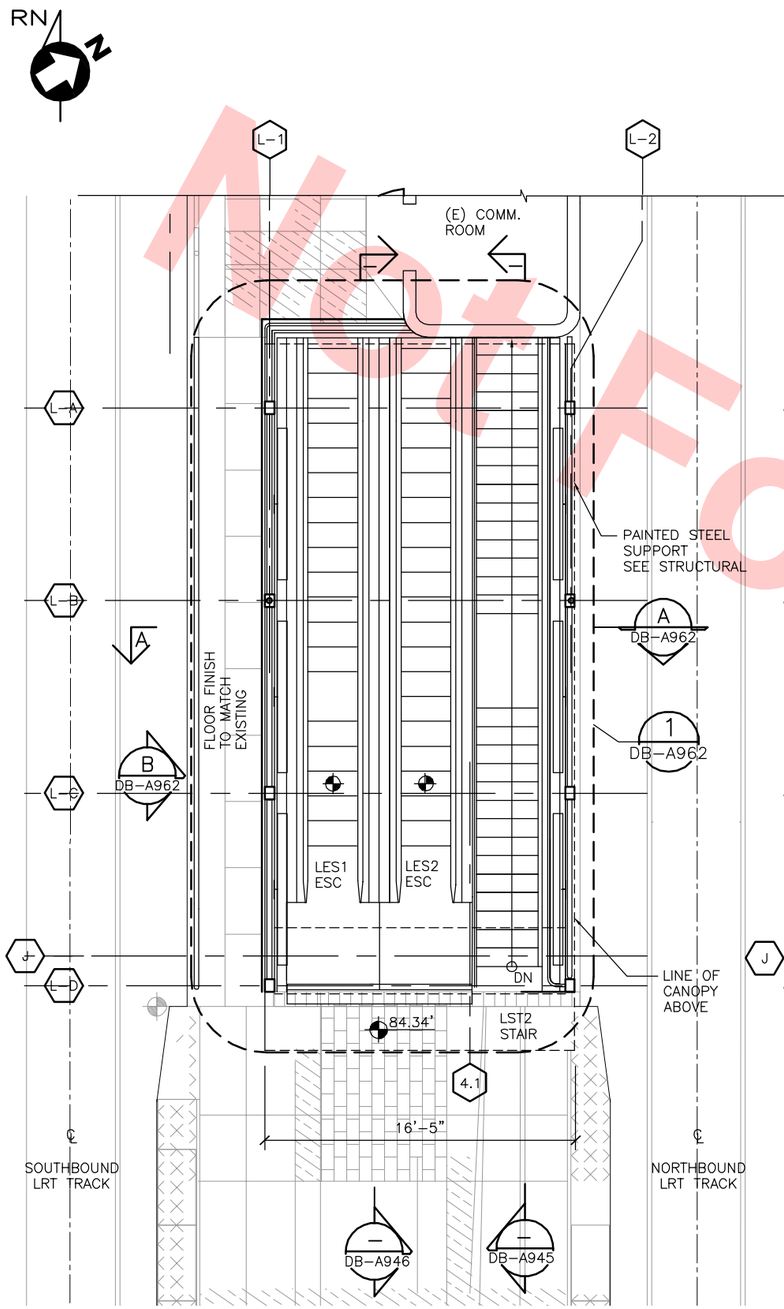

DETAIL CANOPY PLAN 1
SCALE: 1/4"=1'-0"
DB-A961X
DB-A913
DB-A943

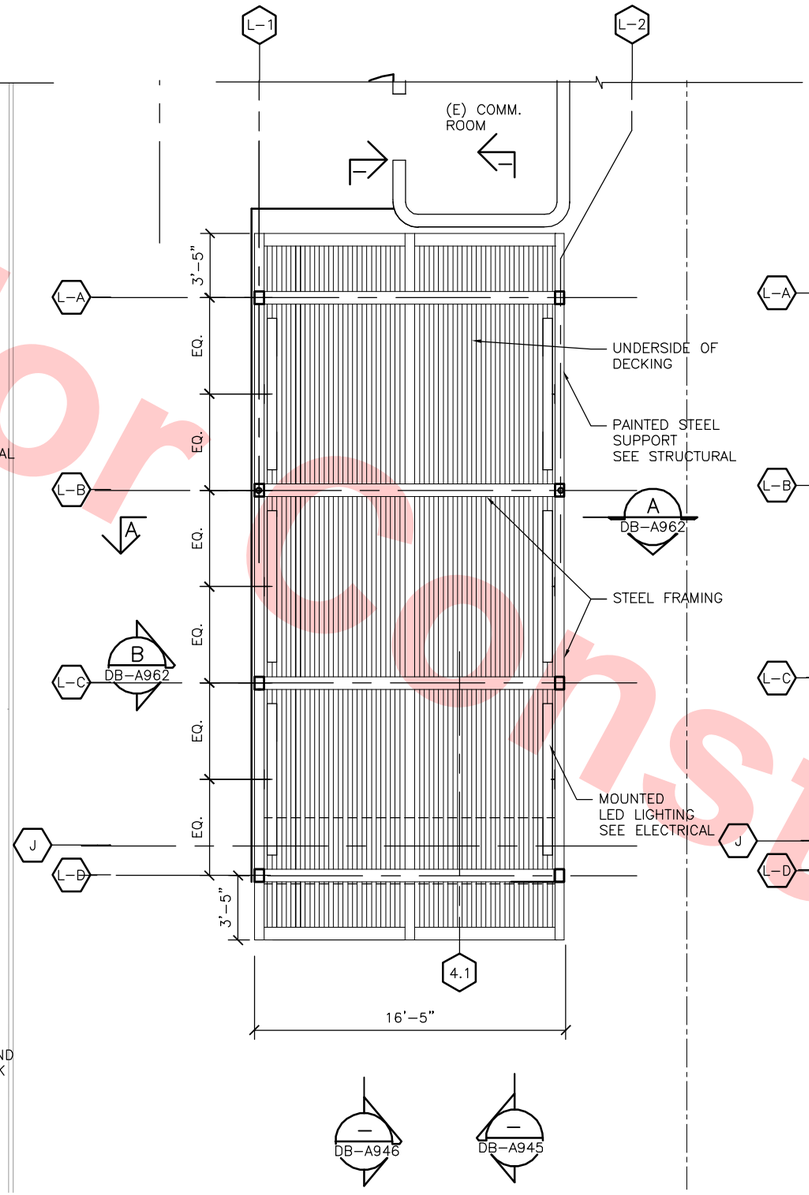

DETAIL CANOPY REFLECTED CEILING PLAN 2
SCALE: 1/4"=1'-0"
DB-A961X

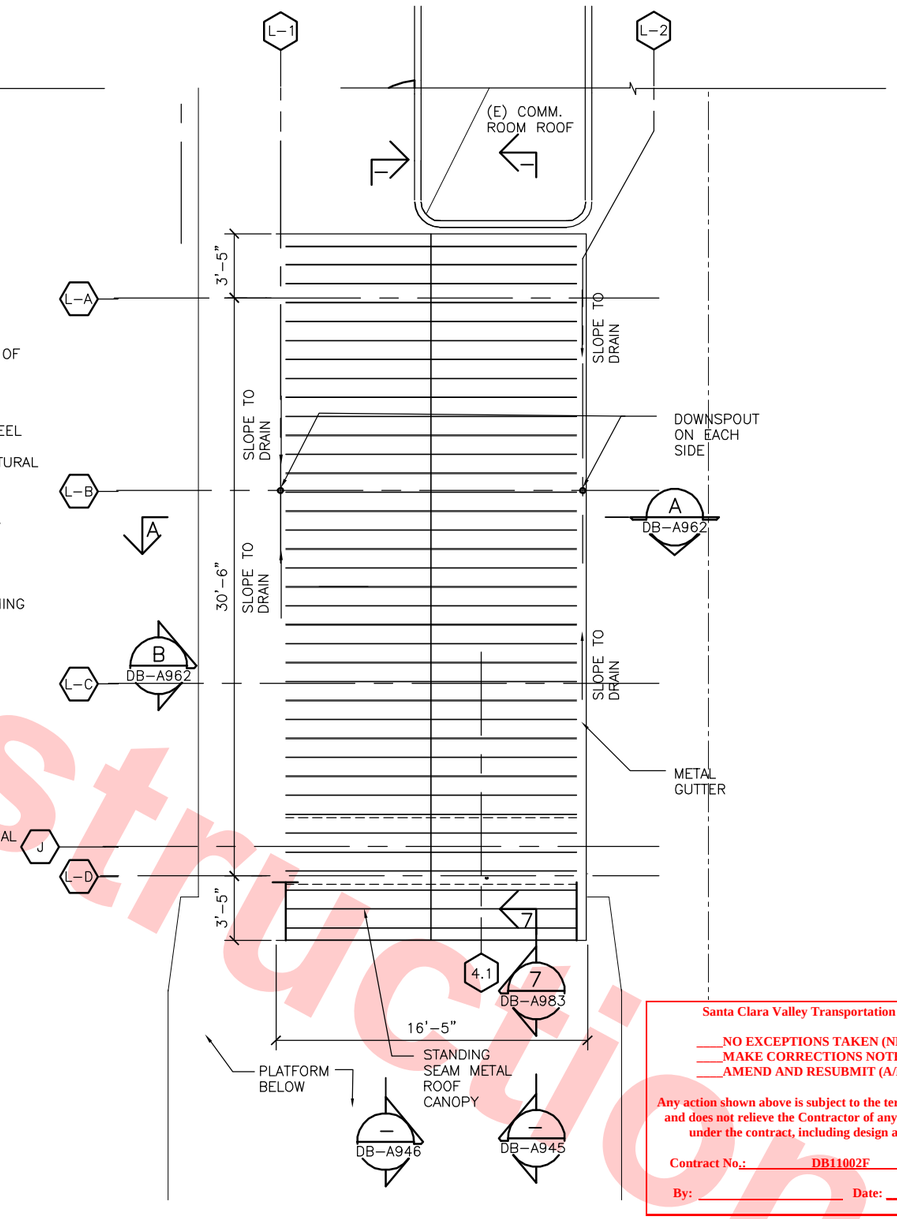

DETAIL CANOPY ROOF PLAN 3
SCALE: 1/4"=1'-0"
DB-A961X
DB-A913
DB-A943

4' 0' 4' 8'
GRAPHIC SCALE

Santa Clara Valley Transportation Authority

____NO EXCEPTIONS TAKEN (NET)
____MAKE CORRECTIONS NOTED (MCN)
____AMEND AND RESUBMIT (A/R)

Any action shown above is subject to the terms of the contract and does not relieve the Contractor of any of its obligations under the contract, including design and detailing.

Contract No.: DB11002F

By: _____ Date: _____

Not For Construction

REV	DATE	BY	SUB	APP	DESCRIPTION
0	20130710				READINESS FOR CONSTRUCTION

DESIGNED BY S. SOPORI
DRAWN BY K. STEPANIAN
CHECKED BY S. DEBNATH
IN CHARGE R. BARLAAN
DATE 20130710

LICENSED ARCHITECT SOMESH DEBNATH No. C21523 STATE OF CALIFORNIA

Skanska Shimmick Herzog
1436 California Circle
Milpitas, California 95035
A Joint Venture

Anil Verma Associates, Inc.
1970 Broadway, Suite 525 Oakland, CA 94612
Phone: (510) 835-2537 Fax: (510) 535-2339

Lockwood, Andrews & Newnam, Inc. A LEO A DALY COMPANY

T·Y·LIN INTERNATIONAL

SUBMITTED _____ APPROVED _____

VTA BART SILICON VALLEY
BART SILICON VALLEY BERRYESSA EXTENSION

LINE, TRACK, STATIONS AND SYSTEMS
DESIGN UNIT 023
MONTAGUE LRT AND MILPITAS POC

LRT CANOPY
DETAIL PLANS

CADD FILENAME C700-S-DB-A961X.dwg
SIZE D | SCALE 1/4"=1'-0"
CONTRACT NO. C700 | REV. 0
AREA CODE DB | SHEET NO. A961X | PAGE NO. 0646

JosephG Jun 26, 2013 - 12:17pm G:\Current Projects\VTA-Berryessa Extension Project\Station - Milpitas\CAD\Drawings Out\13-0710 C700 MS LRT_POC - RFC Submittal\MS C700-S-DB-A961X.dwg

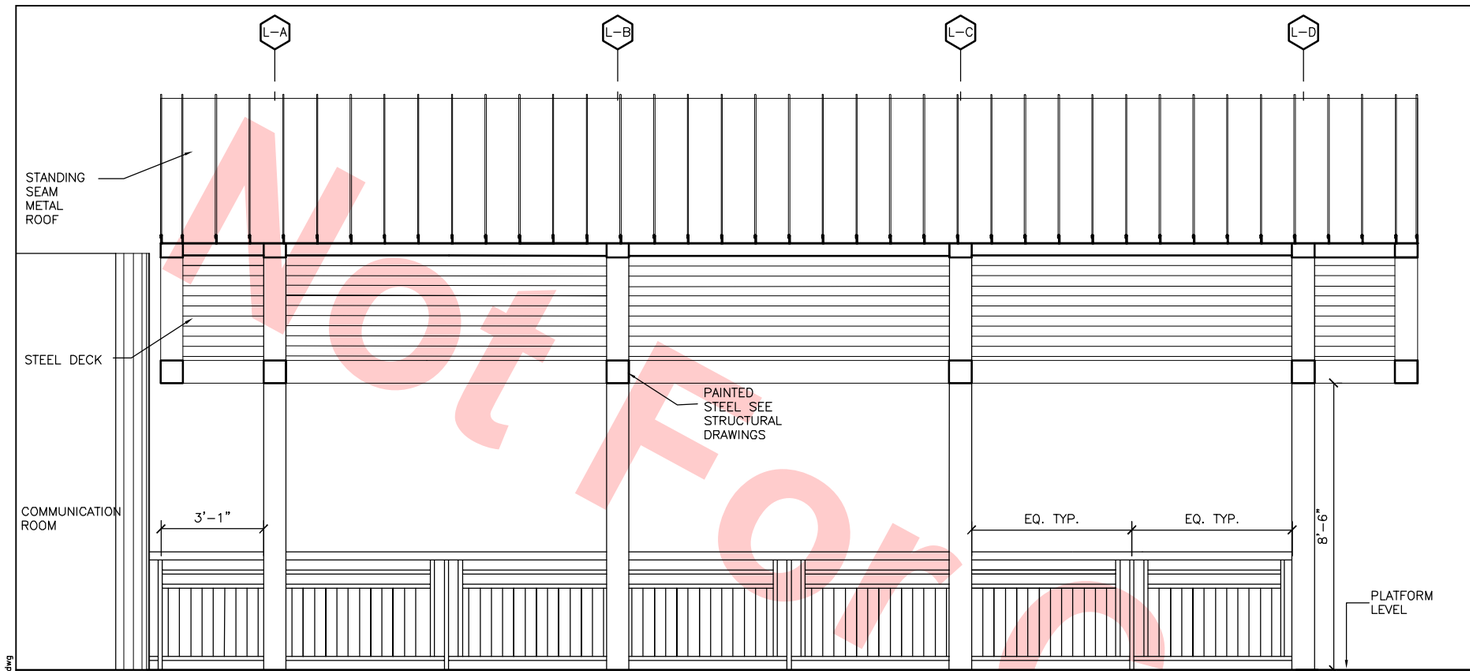

SECTION
SCALE: 7/16"=1-'0"

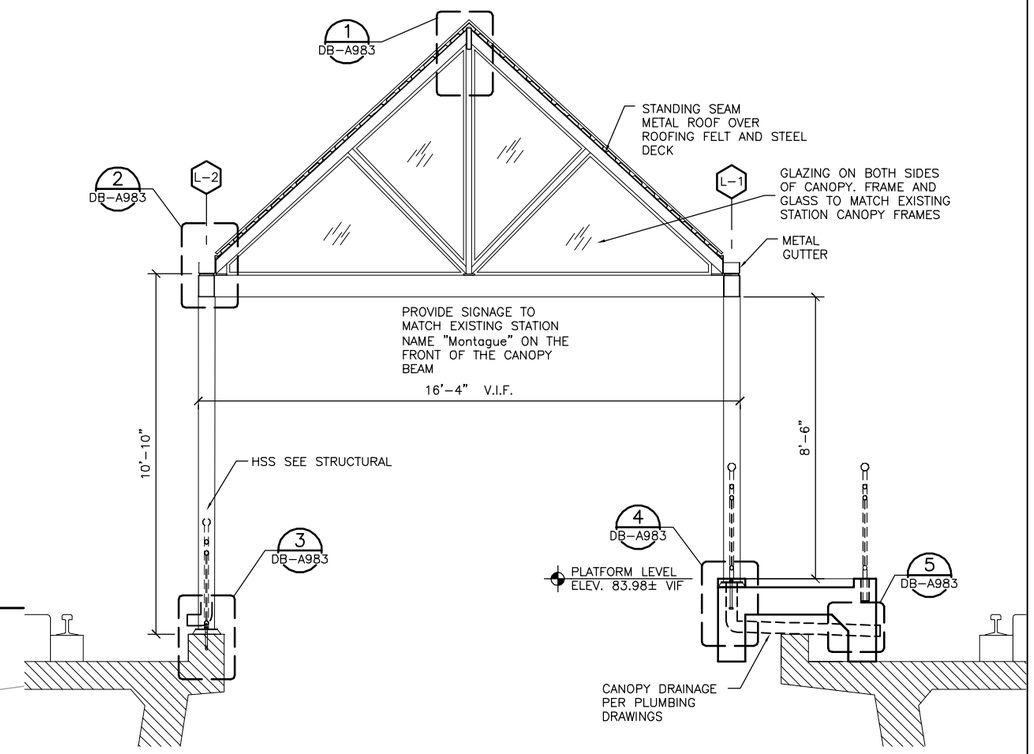

DETAIL SECTION A DB-A962
SCALE: 7/16"=1-'0"
DB-A961

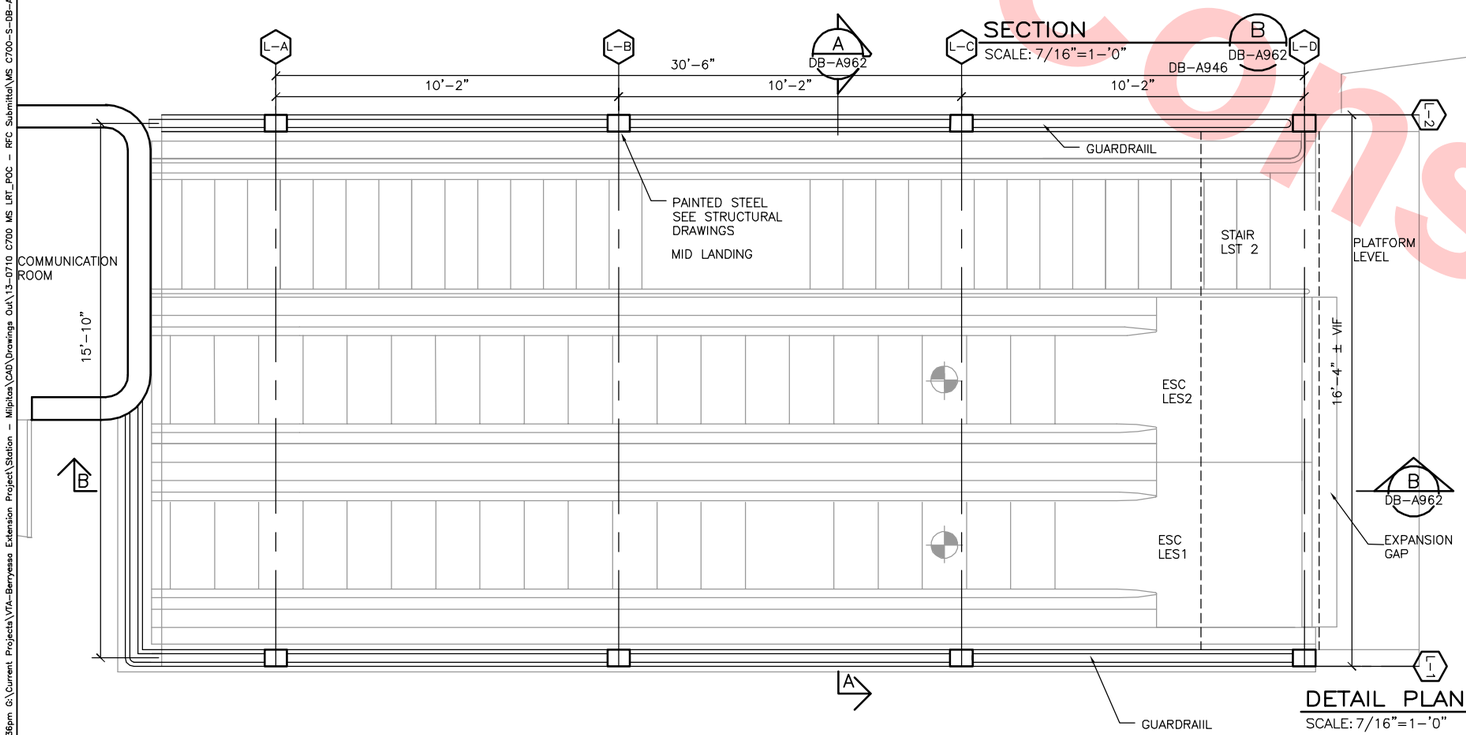

DETAIL PLAN 1 DB-A962
SCALE: 7/16"=1-'0"
DB-A961

Santa Clara Valley Transportation Authority

____NO EXCEPTIONS TAKEN (NET)
____MAKE CORRECTIONS NOTED (MCN)
____AMEND AND RESUBMIT (A/R)

Any action shown above is subject to the terms of the contract and does not relieve the Contractor of any of its obligations under the contract, including design and detailing.

Contract No.: DB11002F

By: _____ Date: _____

Not For Construction

REV	DATE	BY	SUB	APP	DESCRIPTION
0	20130710				READINESS FOR CONSTRUCTION

DESIGNED BY S. DEBNATH
DRAWN BY S. SOPORI
CHECKED BY S. DEBNATH
IN CHARGE R. BARLAAN
DATE 20130710

LICENSED ARCHITECT SOMESH DEBNATH No. C21523 STATE OF CALIFORNIA

Skanska Shimmick Herzog
1436 California Circle
Milpitas, California 95035
A Joint Venture

Anil Verma Associates, Inc.
1970 Broadway, Suite 325 Oakland, CA 94612
Phone: (510) 835-2537 Fax: (510) 835-2339

Lockwood, Andrews & Newnam, Inc. A LEO A DALY COMPANY

T·Y·LIN INTERNATIONAL

SUBMITTED

APPROVED

VTA BART SILICON VALLEY
BART SILICON VALLEY BERRYESSA EXTENSION

LINE, TRACK, STATIONS AND SYSTEMS
DESIGN UNIT 023
MONTAGUE LRT AND MILPITAS POC

LRT CANOPY
DETAIL ELEVATION AND SECTION

CADD FILENAME C700-S-DB-A962.dwg
SIZE D | SCALE AS NOTED
CONTRACT NO. C700 | REV. 0
AREA CODE DB | SHEET NO. A962 | PAGE NO. 0647

JosephG Jun 26, 2013 – 12:36pm G:\Current Projects\VTA-Berryessa Extension Project\Station – Milpitas\CAD\Drawings Out\13-0710 C700 MS LRT_POC – RFC Submittal\MS C700-S-DB-A962.dwg

INTERIOR FINISH SCHEDULE

AREA	ROOM NO	ROOM NAME	FLOOR			WALL								WAINSCOT								CEILING		SOFFIT		REMARK(S)
			SUB	FIN	BASE	NORTH		EAST		SOUTH		WEST		NORTH		EAST		SOUTH		WEST		MAT	FIN	MAT	FIN	
						MAT	FIN	MAT	FIN	MAT	FIN	MAT	FIN	MAT	FIN	MAT	FIN	MAT	FIN	MAT	FIN					
MONTAGUE LRT POC	1	(E) ELEV EQUIPMENT ROOM	–	CONC	–	CONC	–	CONC	–	CONC	–	CONC	–	–	–	–	–	–	–	–	–	–	–	–	–	SHOWN ON DWG DB–A911
	2	(E) ELEC EQUIPMENT ROOM	–	CONC	–	CONC	–	CONC	–	CONC	–	CONC	–	–	–	–	–	–	–	–	–	–	–	–	–	SHOWN ON DWG DB–A911
	POC1	PEDESTRIAN OVERCROSSING	CONC	CI–1	–	–	–	–	–	–	–	–	–	–	–	–	–	–	–	–	–	EXP	–	EXP	–	4'–0" WIDE METAL VALENCE AT CENTER PAINTED WHITE. PRIME AND PAINT ALL STRUCTURAL ELEMENTS. NO PAINT ON STAINLESS STEEL AND ALUMINUM ELEMENTS. PRIME AND PAINT STANDING SEAM ROOF – COLOR TO MATCH STATION ROOF. VERIFY FINISHES WITH OWNER OR REPRESENTATIVE. HANDRAILS AND GUARDRAILS – PAINT TO MATCH STATION COLORS.
	3	MONTAGUE LRT	CONC	–	–	–	–	–	–	–	–	–	–	–	–	–	–	–	–	–	–	–	–	–	–	ALL FINISHES TO MATCH EXISTING FINISHES IN COLOR, TEXTURE, AND QUALITY U.N.O.

NOTES:

1. SEE DWG DB–A701 FOR FINISH CODES AND NOTES.
2. SEE DWG DB–A701 FOR FINISHES ABBREVIATIONS.

Santa Clara Valley Transportation Authority

____NO EXCEPTIONS TAKEN (NET)
____MAKE CORRECTIONS NOTED (MCN)
____AMEND AND RESUBMIT (A/R)

Any action shown above is subject to the terms of the contract and does not relieve the Contractor of any of its obligations under the contract, including design and detailing.

Contract No.: DB11002F

By: _____ Date: _____

Not For Construction

REV	DATE	BY	SUB	APP	DESCRIPTION
0	20130710				READINESS FOR CONSTRUCTION

DESIGNED BY S. SOPORI
DRAWN BY K. STEPANIAN
CHECKED BY S. DEBDATH
IN CHARGE R. BARLAAN
DATE 20130710

LICENSED ARCHITECT SOMESH DEBNATH No. C21523 STATE OF CALIFORNIA

Skanska Shimmick Herzog
1436 California Circle Milpitas, California 95035
A Joint Venture

Anil Verma Associates, Inc.
1970 Broadway, Suite 525 Oakland, CA 94612
Phone: (510) 835-2537 Fax: (510) 835-2339
SUBMITTED

Lockwood, Andrews & Newnam, Inc. | T·Y·LIN INTERNATIONAL
APPROVED

VTA BART SILICON VALLEY
BART SILICON VALLEY BERRYESSA EXTENSION

LINE, TRACK, STATIONS AND SYSTEMS DESIGN UNIT 023
MONTAGUE LRT AND MILPITAS POC

FINISH SCHEDULE

CADD FILENAME C700–S–DB–A971.dwg
SIZE D | SCALE NONE
CONTRACT NO. C700 | REV. 0
AREA CODE DB | SHEET NO. A971 | PAGE NO. 0648

JosephG Jun 26, 2013 – 12:18pm G:\Current Projects\VTA–Berryessa Extension Project\Station – Milpitas\CAD\Drawings Out\13–0710 C700 MS LRT_POC – RFC Submittal\MS C700–S–DB–A971.dwg

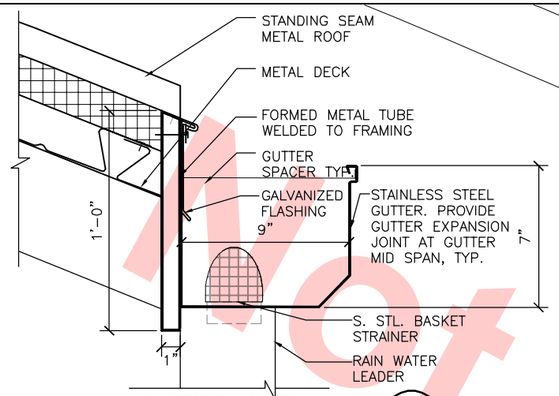

GUTTER DETAIL 1
SCALE: 3"=1'-0" DB-A981 DB-A940

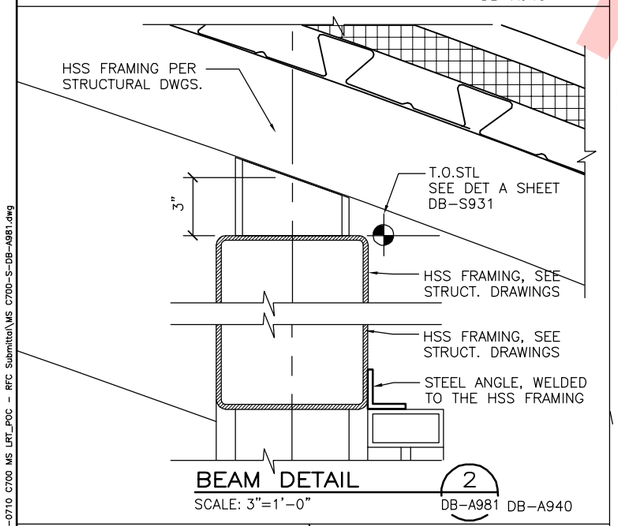

BEAM DETAIL 2
SCALE: 3"=1'-0" DB-A981 DB-A940

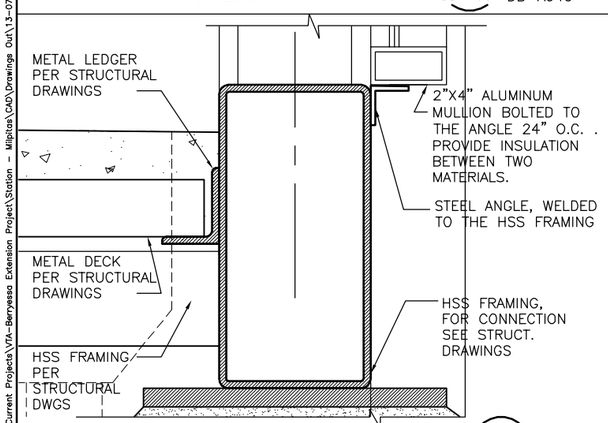

BOTTOM BEAM DETAIL 3
SCALE: 3"=1'-0" DB-A981 DB-A940

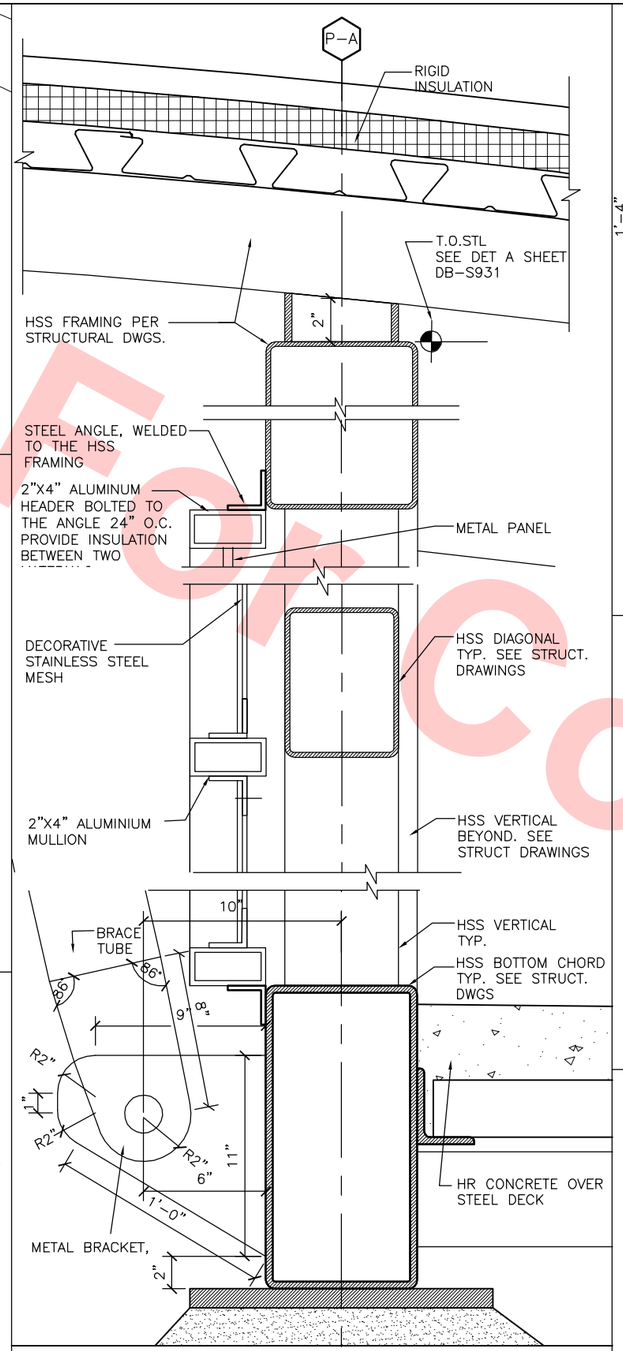

BOTTOM BEAM DETAIL 4
SCALE: 3"=1'-0" DB-A981 DB-A940

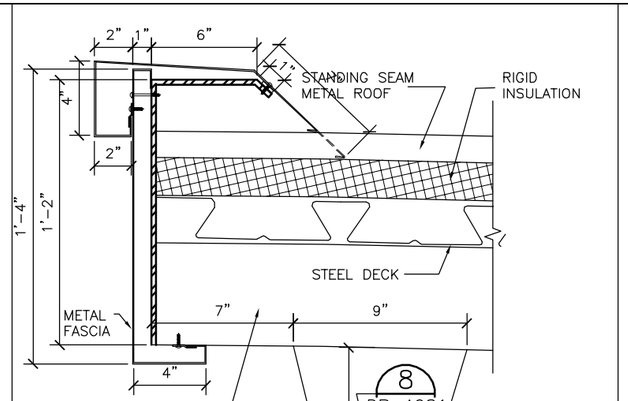

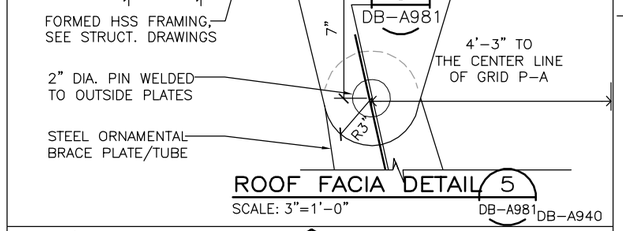

ROOF FACIA DETAIL 5
SCALE: 3"=1'-0" DB-A981 DB-A940

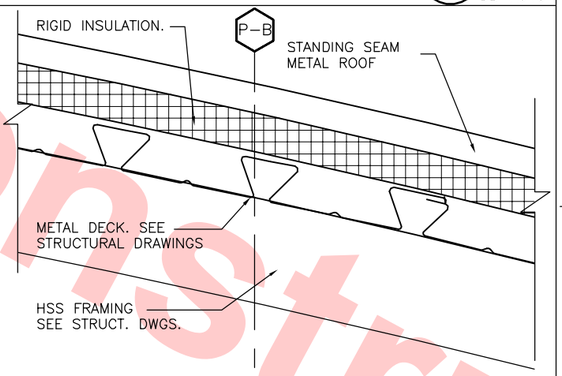

ROOF DETAIL 7
SCALE: 3"=1'-0" DB-A981 DB-A940

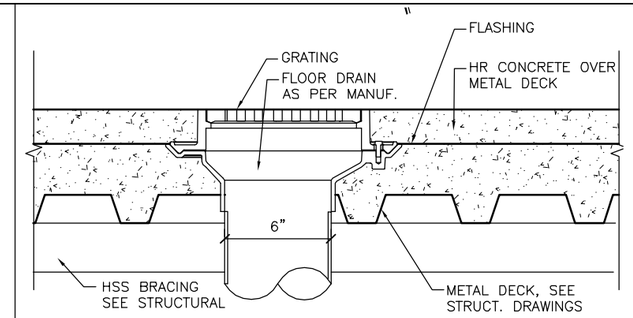

FLOOR DRAIN DETAIL 6
SCALE: 3"=1'-0" DB-A981 DB-A940

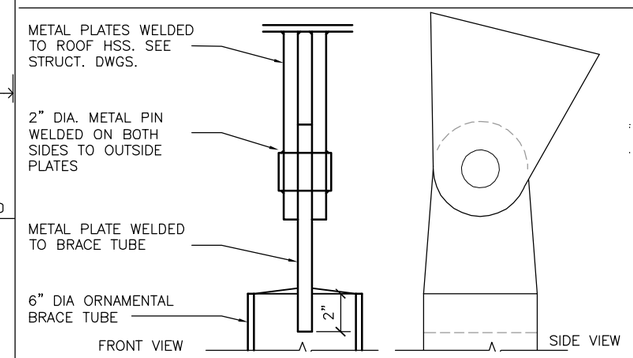

BRACE TUBE DETAIL 8
SCALE: 3"=1'-0" DB-A981

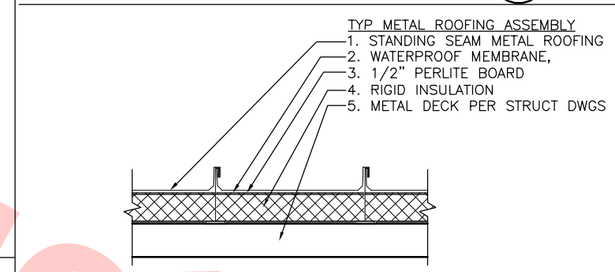

TYP. ROOF ASSEMBLY 10
SCALE: 1 1/2"=1'-0" DB-A981

Santa Clara Valley Transportation Authority

____NO EXCEPTIONS TAKEN (NET)
____MAKE CORRECTIONS NOTED (MCN)
____AMEND AND RESUBMIT (A/R)

Any action shown above is subject to the terms of the contract and does not relieve the Contractor of any of its obligations under the contract, including design and detailing.

Contract No.: DB11002F

By: _____ Date: _____

Not For Construction

REV	DATE	BY	SUB	APP	DESCRIPTION
0	20130710				READINESS FOR CONSTRUCTION

DESIGNED BY S. SOPORI
DRAWN BY K. STEPANIAN
CHECKED BY S. DEBNATH
IN CHARGE R. BARLAAN
DATE 20130710

LICENSED ARCHITECT SOMESH DEBNATH No. C21523 STATE OF CALIFORNIA

Skanska Shimmick Herzog
1436 California Circle
Milpitas, California 95035
A Joint Venture

Anil Verma Associates, Inc.
1970 Broadway, Suite 325 Oakland, CA 94612
Phone: (510) 835-2537 Fax: (510) 835-2339
SUBMITTED

Lockwood, Andrews & Newnam, Inc. A LEO A DALY COMPANY
T·Y·LIN INTERNATIONAL
APPROVED

VTA BART SILICON VALLEY
BART SILICON VALLEY BERRYESSA EXTENSION

LINE, TRACK, STATIONS AND SYSTEMS DESIGN UNIT 023
MONTAGUE LRT AND MILIPTAS POC

MISCELLANEOUS DETAILS

CADD FILENAME C700-S-DB-A981.dwg
SIZE D | SCALE 3"=1'-0"
CONTRACT NO. C700 | REV. 0
AREA CODE DB | SHEET NO. A981 | PAGE NO. 0649

JosephG Jun 26, 2013 - 12:18pm G:\Current Projects\VTA-Berryessa Extension Project\Station - Milpitas\CAD\Drawings Out\13-0710 C700 MS LRT_POC - RFC Submittal\MS C700-S-DB-A981.dwg

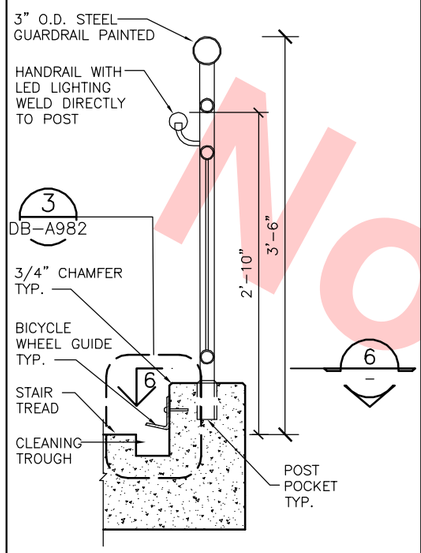

DETAIL 1 (DB-A982)
SCALE: 1 1/2"=1'-0"
DB-A947

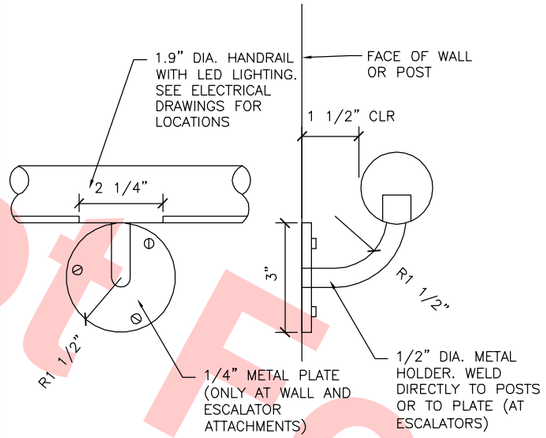

HANDRAIL DETAIL 2 (DB-A982)
SCALE: 6"=1'-0"

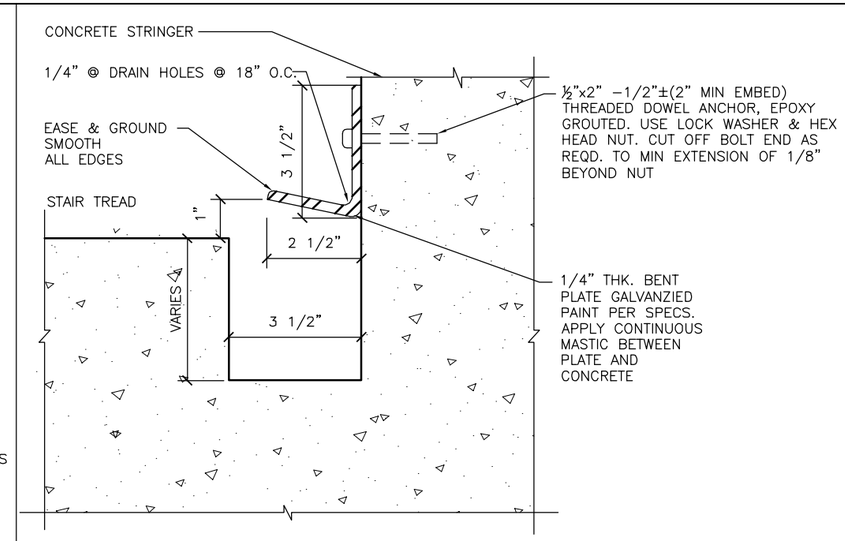

DETAIL 3 (DB-A982)
SCALE: 6"=1'-0"

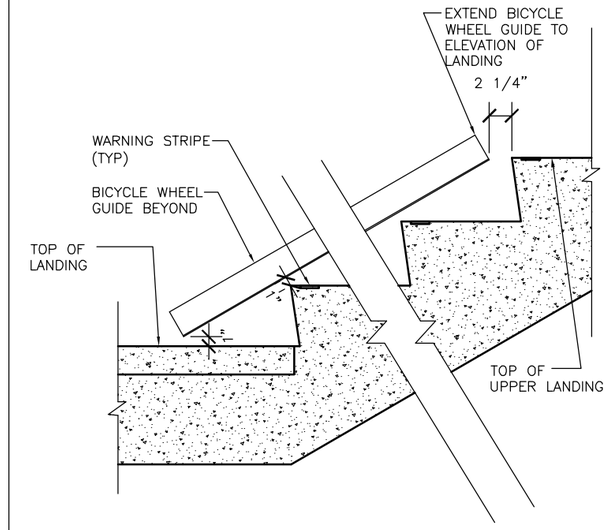

DETAIL 4 (DB-A982)
SCALE: 1 1/2"=1'-0"
DB-A945

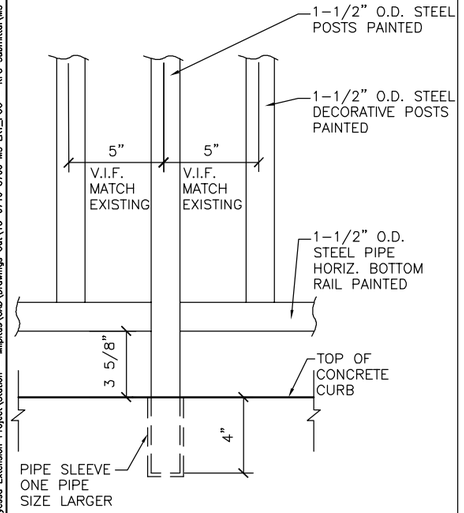

TYP POST DETAIL 5 (DB-A982)
SCALE: 3"=1'-0"

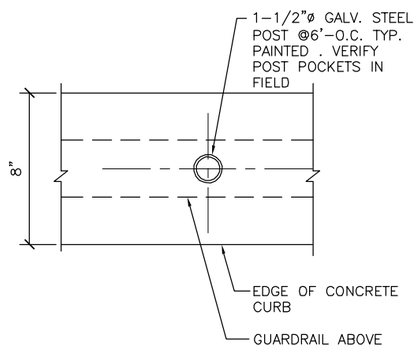

DETAIL 6 (DB-A982)
SCALE: 3"=1'-0"

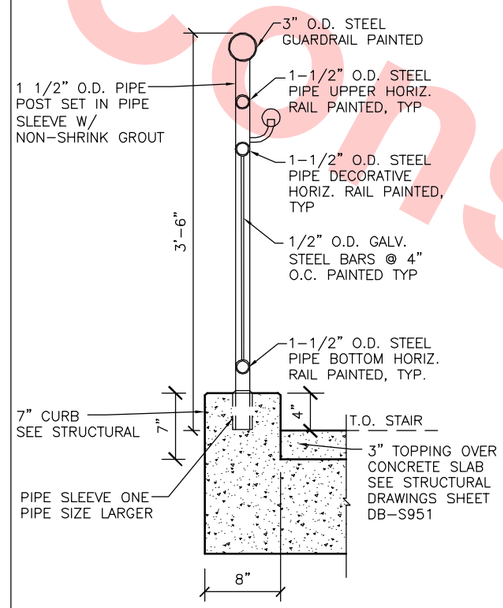

DETAIL 7 (DB-A982)
SCALE: 1 1/2"=1'-0"
DB-A947

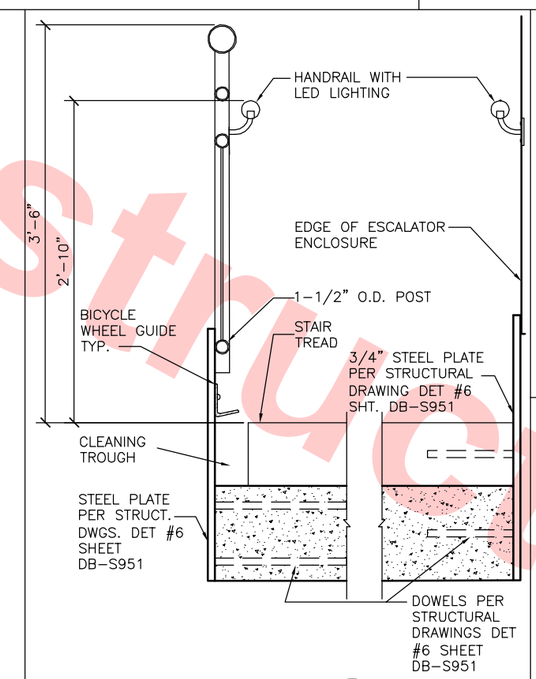

DETAIL 8 (DB-A982)
SCALE: 1 1/2"=1'-0"
DB-A938

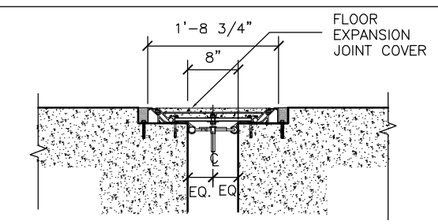

NOTE:
EXPANSION JOINT COVER DETAILS DEPICT GENERAL CONFIGURATION ONLY. COORDINATE WITH EXPANSION JOINT MANUFACTURER

TYP. EXP JOINT 9 (DB-A982)
SCALE: 1 1/2"=1'-0"
DB-A941
DB-A942

Santa Clara Valley Transportation Authority

____NO EXCEPTIONS TAKEN (NET)
____MAKE CORRECTIONS NOTED (MCN)
____AMEND AND RESUBMIT (A/R)

Any action shown above is subject to the terms of the contract and does not relieve the Contractor of any of its obligations under the contract, including design and detailing.

Contract No.: DB11002F

By: _____ **Date:** _____

Not For Construction

REV	DATE	BY	SUB	APP	DESCRIPTION
0	20130710				READINESS FOR CONSTRUCTION

DESIGNED BY S. SOPORI
DRAWN BY K. STEPANIAN
CHECKED BY S. DEBNATH
IN CHARGE R. BARLAAN
DATE 20130710

LICENSED ARCHITECT SANJEEV DEBNATH No. C21523 STATE OF CALIFORNIA

Skanska Shimmick Herzog
1436 California Circle Milpitas, California 95035
A Joint Venture

Anil Verma Associates, Inc.
1970 Broadway, Suite 525 Oakland, CA 94612
Phone: (510) 835-2537 Fax: (510) 835-2339
SUBMITTED

Lockwood, Andrews & Newnam, Inc. A CH2M HILL COMPANY
T·Y·LIN INTERNATIONAL
APPROVED

VTA BART SILICON VALLEY
BART SILICON VALLEY BERRYESSA EXTENSION

LINE, TRACK, STATIONS AND SYSTEMS
DESIGN UNIT 023
MONTAGUE LRT AND MILPITAS POC

RAILING DETAILS

CADD FILENAME C700-S-DB-A982.dwg
SIZE D | SCALE AS NOTED
CONTRACT NO. C700 | REV. 0
AREA CODE DB | SHEET NO. A982 | PAGE NO. 0650

JosephG Jun 26, 2013 - 12:19pm G:\Current Projects\VTA-Berryessa Extension Project\Station - Milpitas\CAD\Drawings Out\13-0710 C700 MS LRT_POC - RFC Submittal\MS C700-S-DB-A982.dwg

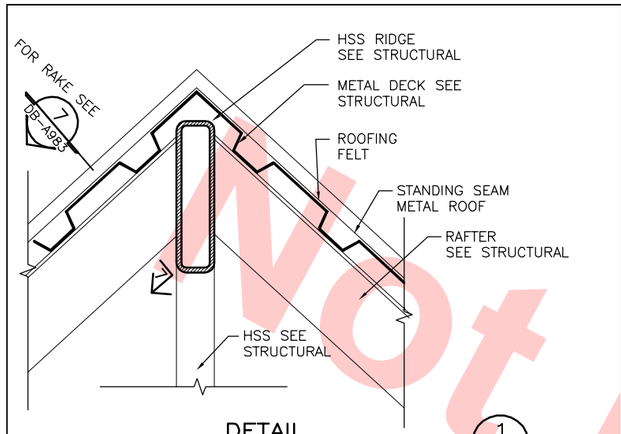

DETAIL 1
SCALE: 3"=1-'0"
DB-A983 DB-A947 DB-A962

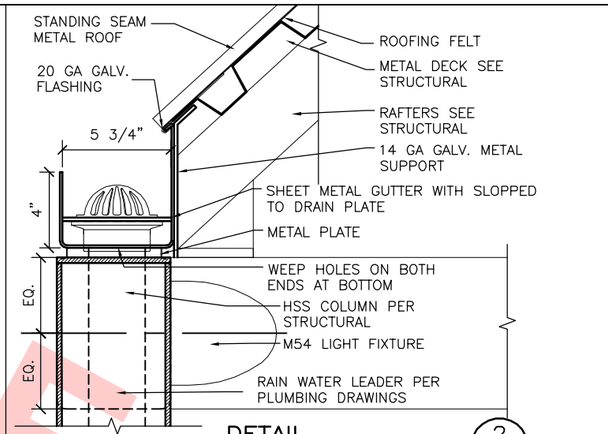

DETAIL 2
SCALE: 3"=1-'0"
DB-A983 DB-A947 DB-A962

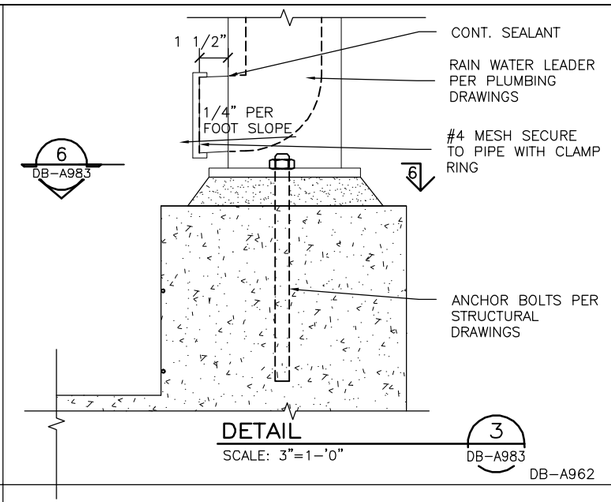

DETAIL 3
SCALE: 3"=1-'0"
DB-A983 DB-A962

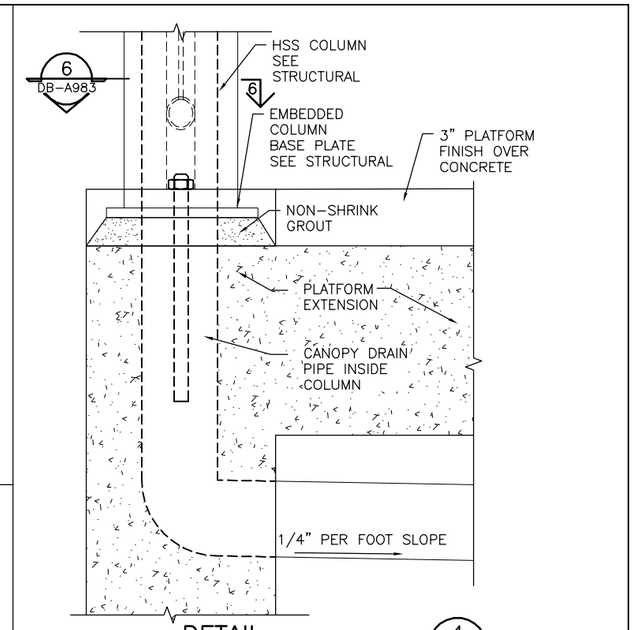

DETAIL 4
SCALE: 3"=1-'0"
DB-A983 DB-A947 DB-A962

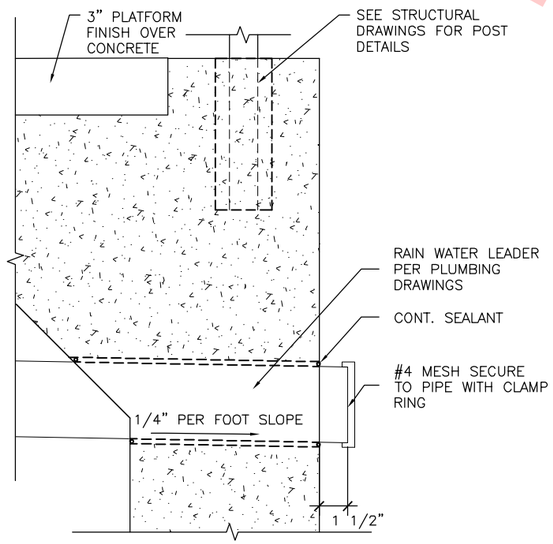

DETAIL 5
SCALE: 3"=1-'0"
DB-A983 DB-A962

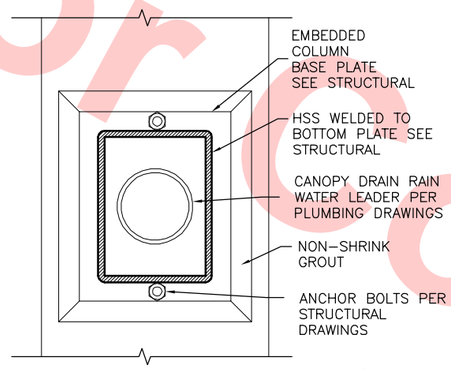

COLUMN DETAIL 6
SCALE: 3"=1-'0"
DB-A983

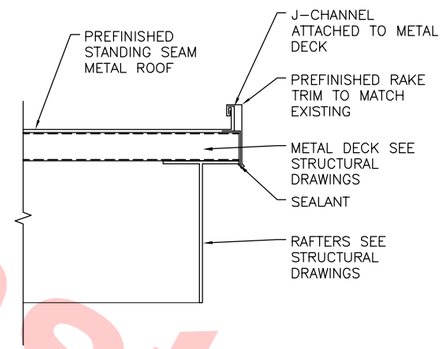

CANOPY RAKE DETAIL 7
SCALE: 3"=1-'0"
DB-A983

Not For Construction

Santa Clara Valley Transportation Authority

____NO EXCEPTIONS TAKEN (NET)
____MAKE CORRECTIONS NOTED (MCN)
____AMEND AND RESUBMIT (A/R)

Any action shown above is subject to the terms of the contract and does not relieve the Contractor of any of its obligations under the contract, including design and detailing.

Contract No.: DB11002F

By: _____ Date: _____

REV	DATE	BY	SUB	APP	DESCRIPTION
0	20130710				READINESS FOR CONSTRUCTION

DESIGNED BY S. DEBNATH
DRAWN BY S. SOPORI
CHECKED BY S. DEBNATH
IN CHARGE R. BARLAAN
DATE 20130710

LICENSED ARCHITECT SOMESH DEBNATH No. C21523 STATE OF CALIFORNIA

Skanska Shimmick Herzog
1436 California Circle
Milpitas, California 95035
A Joint Venture

Anil Verma Associates, Inc.
1970 Broadway, Suite 525 Oakland, CA 94612
Phone: (510) 835-2537 Fax: (510) 835-2339
SUBMITTED

Lockwood, Andrews & Newnam, Inc. A LEO A DALY COMPANY
T·Y·LIN INTERNATIONAL
APPROVED

VTA BART SILICON VALLEY
BART SILICON VALLEY BERRYESSA EXTENSION

LINE, TRACK, STATIONS AND SYSTEMS
DESIGN UNIT 023
MONTAGUE LRT AND MILPITAS POC

LRT CANOPY
DETAILS

CADD FILENAME C700-S-DB-A983.dwg
SIZE D | SCALE AS NOTED
CONTRACT NO. C700 | REV. 0
AREA CODE DB | SHEET NO. A983 | PAGE NO. 0651

JosephG Jun 26, 2013 - 12:19pm G:\Current Projects\VTA-Berryessa Extension Project\Station - Milpitas\CAD\Drawings Out\13-0710 C700 MS LRT_POC - RFC Submittal\MS C700-S-DB-A983.dwg

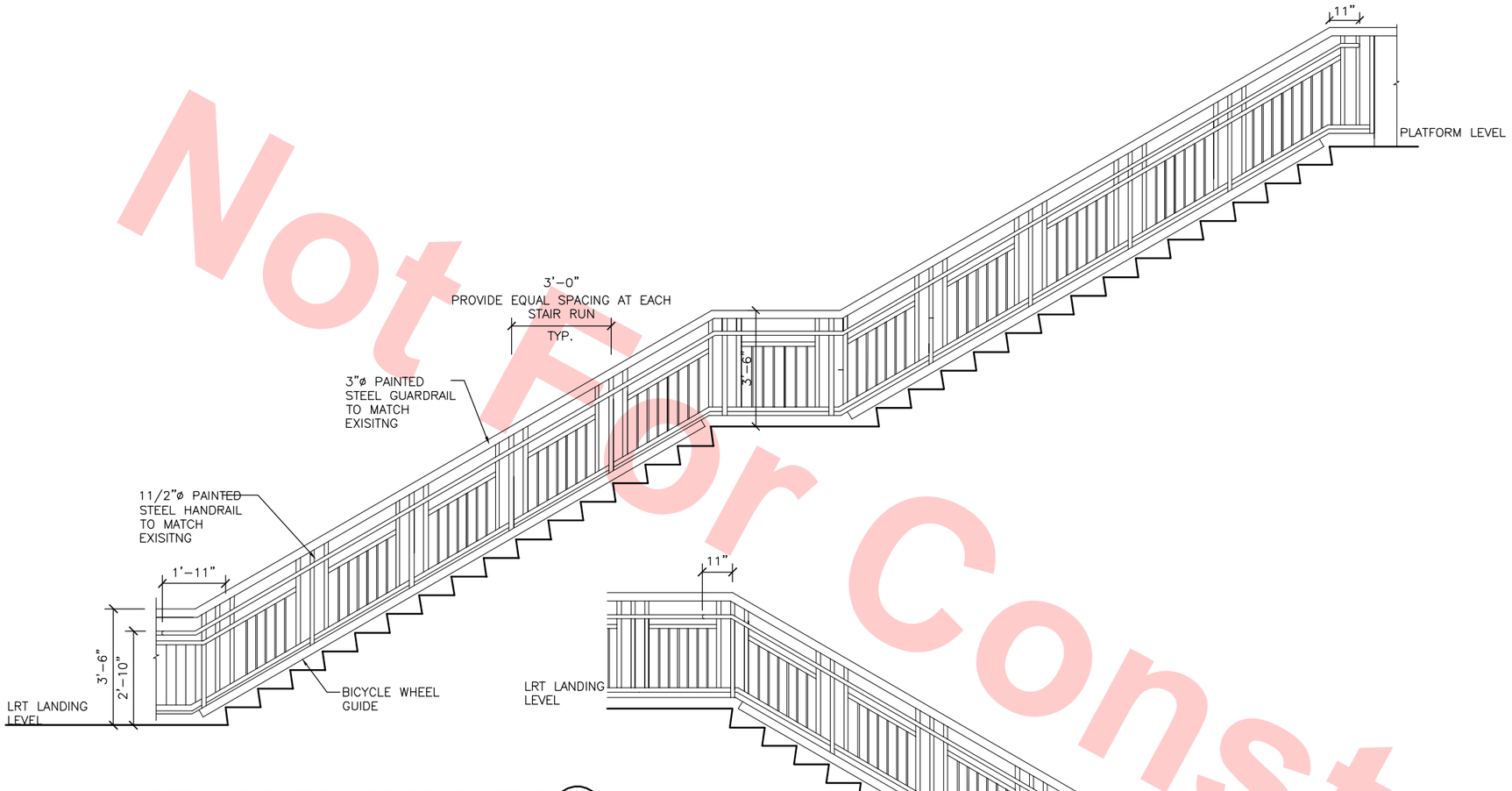

DETAIL ELEVATION OF STAIR LST 2 (2 / DB-A985)
SCALE: 1/2"=1'-0"

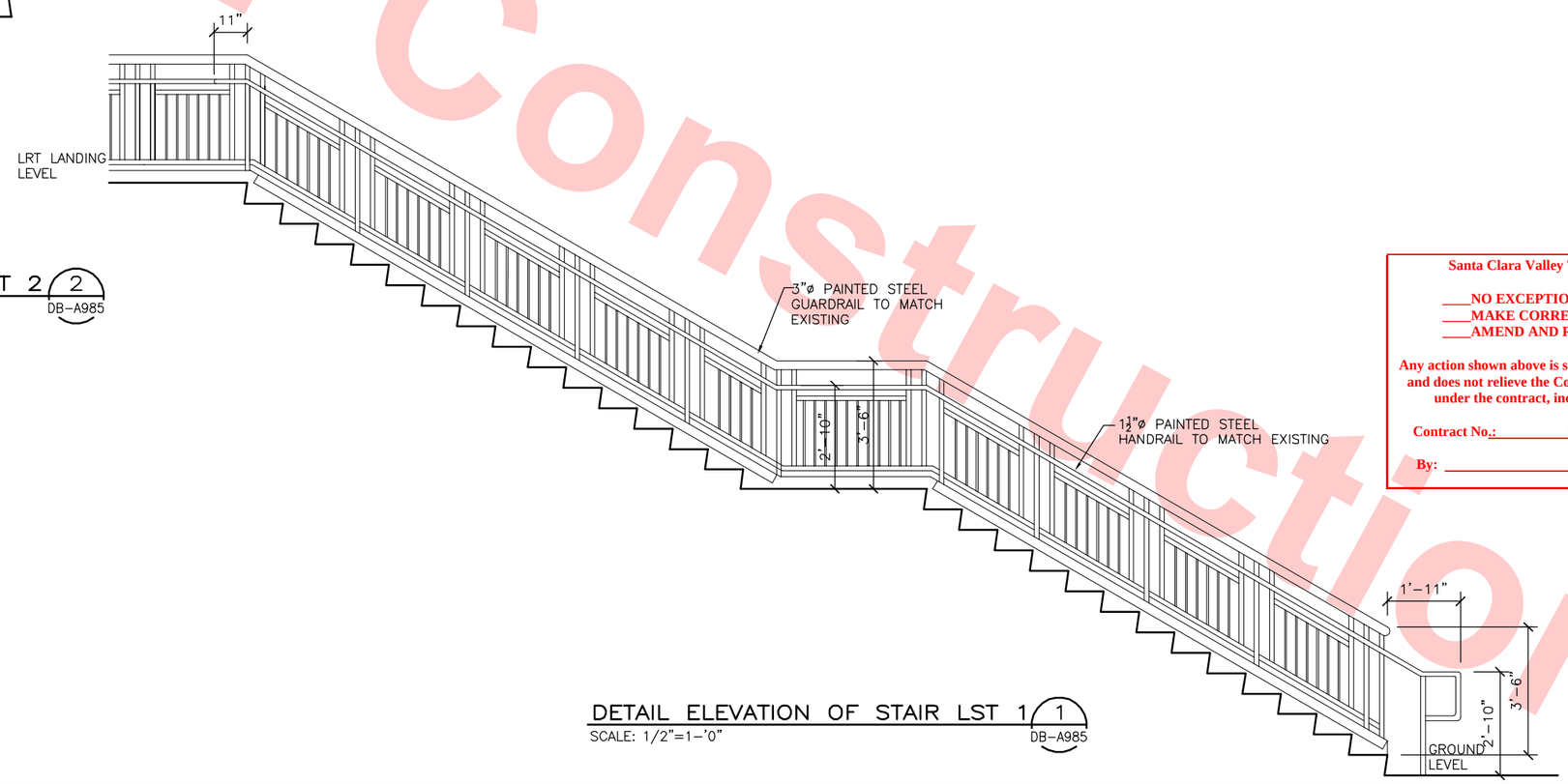

DETAIL ELEVATION OF STAIR LST 1 (1 / DB-A985)
SCALE: 1/2"=1'-0"

Not For Construction

Santa Clara Valley Transportation Authority

____NO EXCEPTIONS TAKEN (NET)
____MAKE CORRECTIONS NOTED (MCN)
____AMEND AND RESUBMIT (A/R)

Any action shown above is subject to the terms of the contract and does not relieve the Contractor of any of its obligations under the contract, including design and detailing.

Contract No.: DB11002F

By: _____ Date: _____

REV	DATE	BY	SUB	APP	DESCRIPTION
0	20130710				READINESS FOR CONSTRUCTION

DESIGNED BY S. SOPORI
DRAWN BY K. STEPANIAN
CHECKED BY S. DEBNATH
IN CHARGE R. BARLAAN
DATE 20130710

LICENSED ARCHITECT SANJEEV DEBNATH No. C21523 STATE OF CALIFORNIA

Skanska Shimmick Herzog
1436 California Circle
Milpitas, California 95035
A Joint Venture

Anil Verma Associates, Inc.
1970 Broadway, Suite 525 Oakland, CA 94612
Phone: (510) 835-2537 Fax: (510) 835-2339
SUBMITTED

Lockwood, Andrews & Newnam, Inc. A CH2M HILL COMPANY
T·Y·LIN INTERNATIONAL
APPROVED

VTA BART SILICON VALLEY
BART SILICON VALLEY BERRYESSA EXTENSION

LINE, TRACK, STATIONS AND SYSTEMS
DESIGN UNIT 023
MONTAGUE LRT AND MILPITAS POC

LRT MONTAGUE
STAIR RAILING ELEVATIONS

CADD FILENAME C700-S-DB-A985.dwg
SIZE D | SCALE 1/2"=1'-0"
CONTRACT NO. C700 | REV. 0
AREA CODE DB | SHEET NO. A985 | PAGE NO. 0652

JosephG Jun 26, 2013 – 12:20pm G:\Current Projects\VTA-Berryessa Extension Project\Station – Milpitas\CAD\Drawings Out\13-0710 C700 MS LRT_POC – RFC Submittal\MS C700-S-DB-A985.dwg

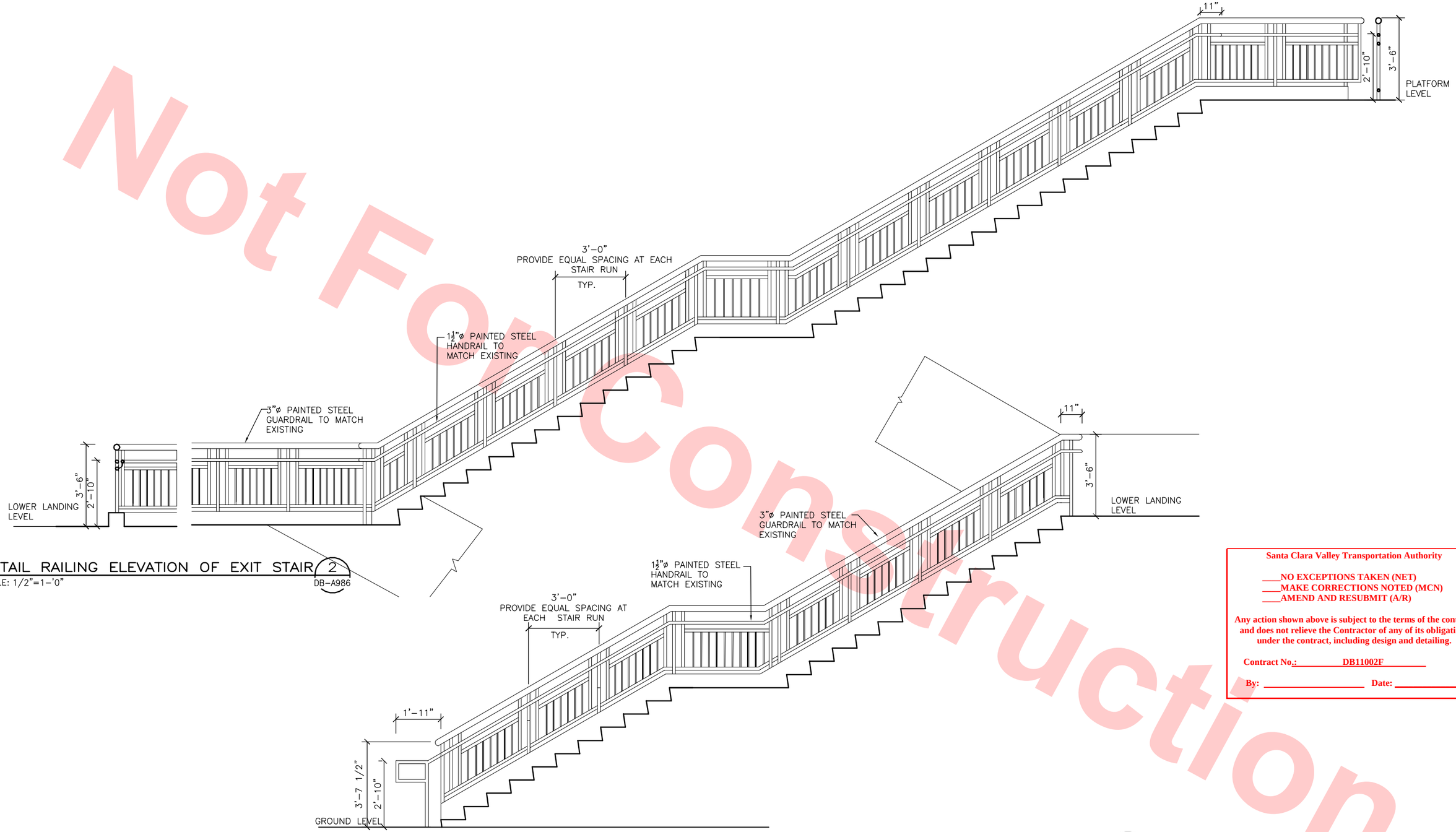

Not For Construction

Santa Clara Valley Transportation Authority

____NO EXCEPTIONS TAKEN (NET)
____MAKE CORRECTIONS NOTED (MCN)
____AMEND AND RESUBMIT (A/R)

Any action shown above is subject to the terms of the contract and does not relieve the Contractor of any of its obligations under the contract, including design and detailing.

Contract No.: DB11002F

By: _____ Date: _____

REV	DATE	BY	SUB	APP	DESCRIPTION
0	20130710				READINESS FOR CONSTRUCTION

DESIGNED BY S. SOPORI
DRAWN BY K. STEPANIAN
CHECKED BY S. DEBNATH
IN CHARGE R. BARLAAN
DATE 20130710

LICENSED ARCHITECT SOMESH DEBNATH No. C21523 STATE OF CALIFORNIA

Skanska Shimmick Herzog
1436 California Circle
Milpitas, California 95035
A Joint Venture

Anil Verma Associates, Inc.
1970 Broadway, Suite 525, Oakland, CA 94612
Phone: (510) 835-2537 Fax: (510) 835-2339
SUBMITTED

Lockwood, Andrews & Newnam, Inc. — T-Y-LIN INTERNATIONAL
APPROVED

VTA BART SILICON VALLEY
BART SILICON VALLEY BERRYESSA EXTENSION

LINE, TRACK, STATIONS AND SYSTEMS DESIGN UNIT 023
MONTAGUE LRT AND MILPITAS POC

LRT MONTAGUE
EMERGENCY EXIT STAIR RAILING ELEVATIONS

CADD FILENAME C700-S-DB-A986.dwg
SIZE D | SCALE 1/2"=1'-0"
CONTRACT NO. C700 | REV. 0
AREA CODE DB | SHEET NO. A986 | PAGE NO. 0653

JosephG Jun 26, 2013 – 12:20pm G:\Current Projects\VTA-Berryessa Extension Project\Station – Milpitas\CAD\Drawings Out\13-0710 C700 MS LRT_POC – RFC Submittal\MS C700-S-DB-A986.dwg

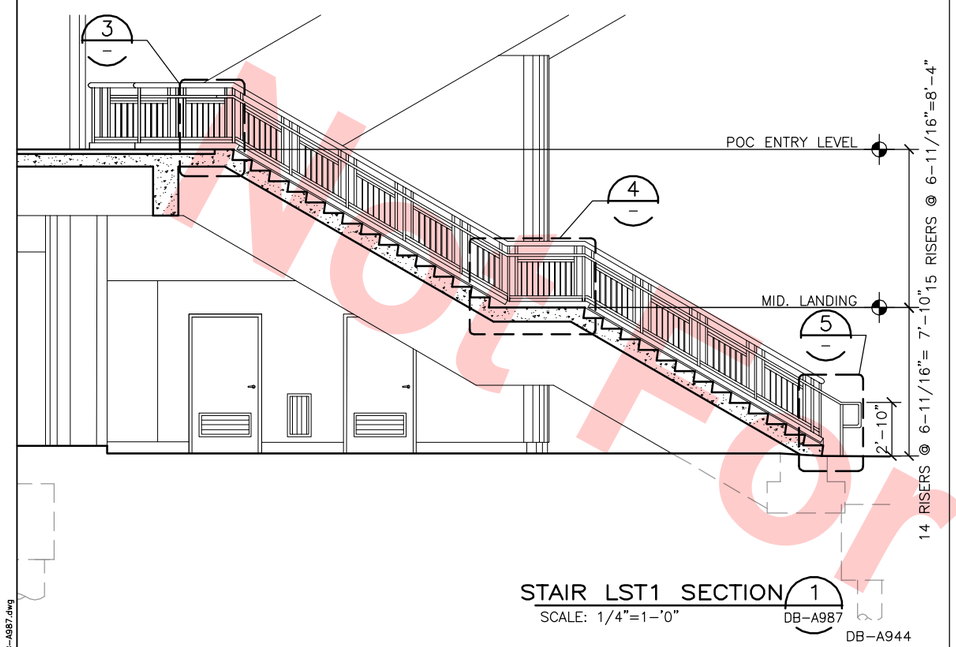

STAIR LST1 SECTION 1
SCALE: 1/4"=1-'0"
DB-A987
DB-A944

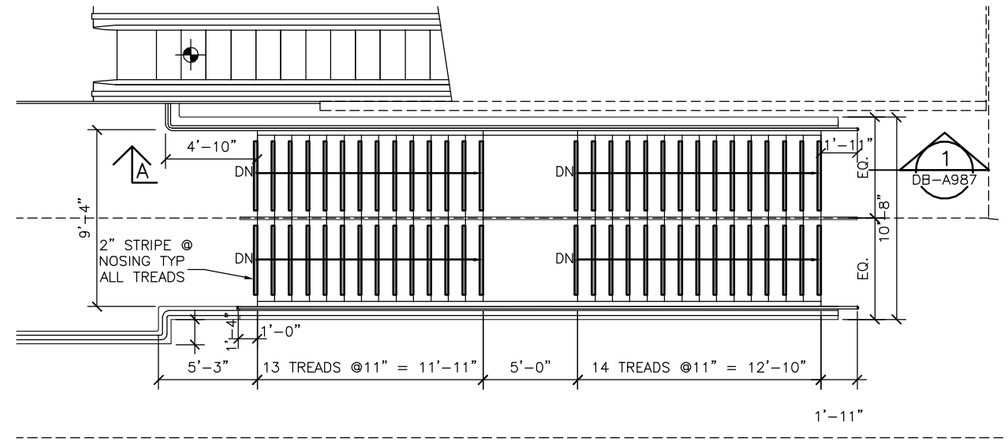

STAIR LST1 PLAN 2
SCALE: 1/4"=1-'0"
DB-A987
DB-A943

Santa Clara Valley Transportation Authority

____NO EXCEPTIONS TAKEN (NET)
____MAKE CORRECTIONS NOTED (MCN)
____AMEND AND RESUBMIT (A/R)

Any action shown above is subject to the terms of the contract and does not relieve the Contractor of any of its obligations under the contract, including design and detailing.

Contract No.: DB11002F

By: _____ Date: _____

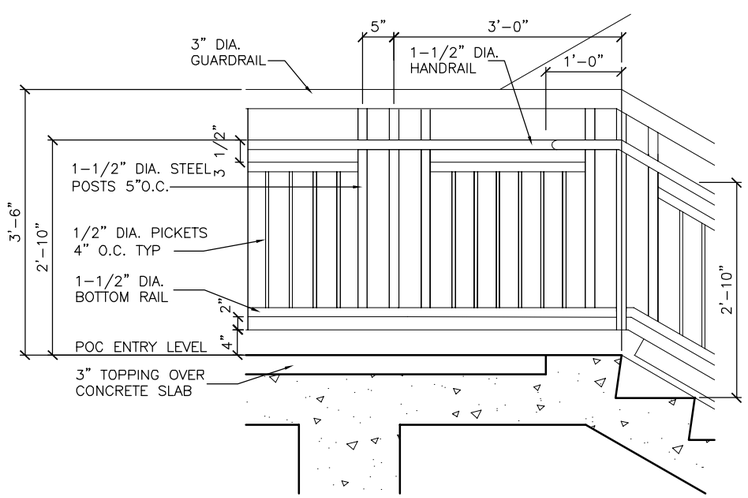

STAIR DETAIL 3
SCALE: 1"=1-'0"
DB-A987

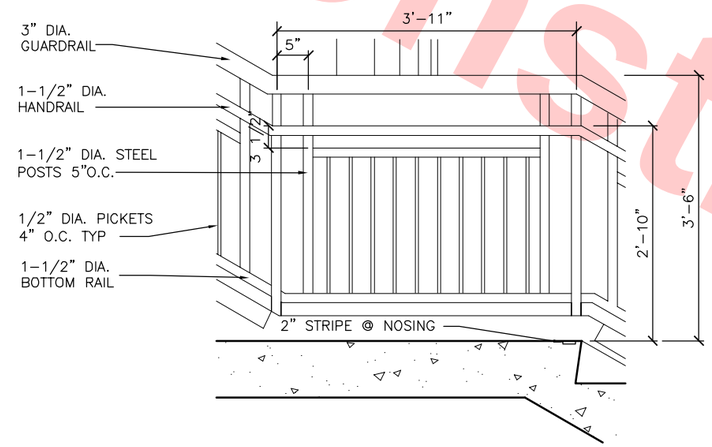

STAIR DETAIL 4
SCALE: 1"=1-'0"
DB-A987

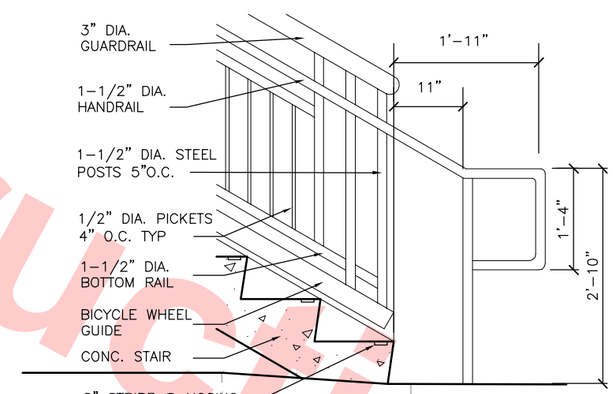

STAIR DETAIL 5
SCALE: 1"=1-'0"
DB-A987

Not For Construction

REV	DATE	BY	SUB	APP	DESCRIPTION
0	20130710				READINESS FOR CONSTRUCTION

DESIGNED BY S. DEBNATH
DRAWN BY G. LEVASHOV
CHECKED BY S. DEBNATH
IN CHARGE R. BARLAAN
DATE 20130710

LICENSED ARCHITECT — SOMESH DEBNATH — No. C21523 — STATE OF CALIFORNIA

Skanska Shimmick Herzog
1436 California Circle
Milpitas, California 95035
A Joint Venture

Anil Verma Associates, Inc.
1970 Broadway, Suite 525, Oakland, CA 94612
Phone: (510) 835-2537 Fax: (510) 535-2339
SUBMITTED

Lockwood, Andrews & Newnam, Inc. — A CH2M HILL COMPANY
T·Y·LIN INTERNATIONAL
APPROVED

VTA BART SILICON VALLEY
BART SILICON VALLEY BERRYESSA EXTENSION

LINE, TRACK, STATIONS AND SYSTEMS
DESIGN UNIT 023
MONTAGUE LRT AND MILPITAS POC
STAIR LST 1
ENLARGED PLAN, SECTION, AND DETAILS

CADD FILENAME C700-S-DB-A987.dwg
SIZE D | SCALE AS NOTED
CONTRACT NO. C700 | REV. 0
AREA CODE DB | SHEET NO. A987 | PAGE NO. 0654

JosephG Jun 26, 2013 - 12:20pm G:\Current Projects\VTA-Berryessa Extension Project\Station - Milpitas\CAD\Drawings Out\13-0710 C700 MS LRT_POC - RFC Submittal\MS C700-S-DB-A987.dwg

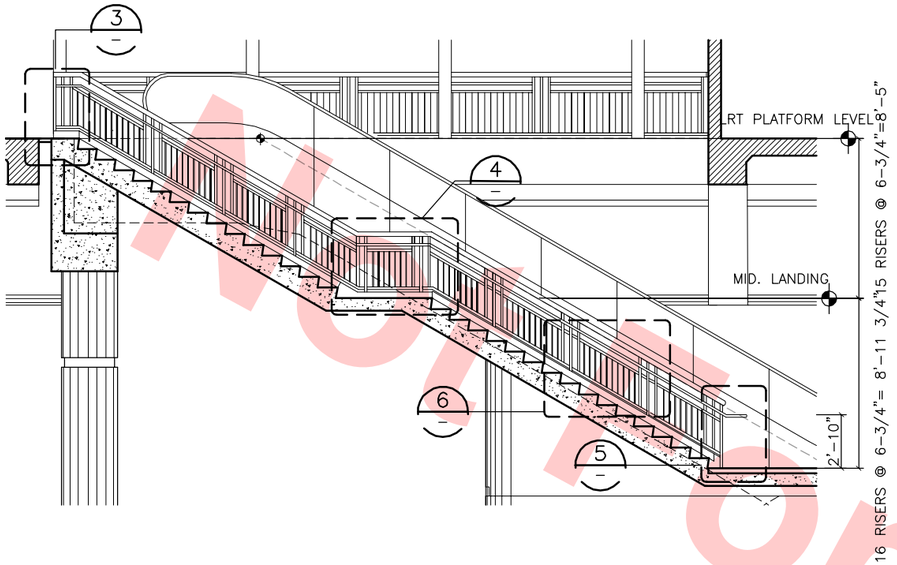

STAIR LST2 SECTION 1 DB-A988
SCALE: 1/4"=1-'0"
DB-A945

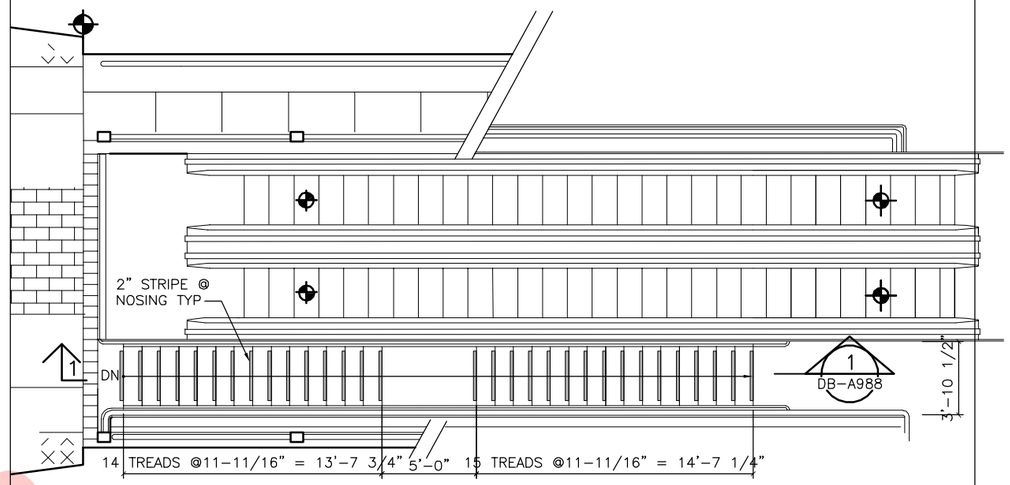

STAIR LST2 PLAN 2 DB-A988
SCALE: 1/4"=1-'0"
DB-A943

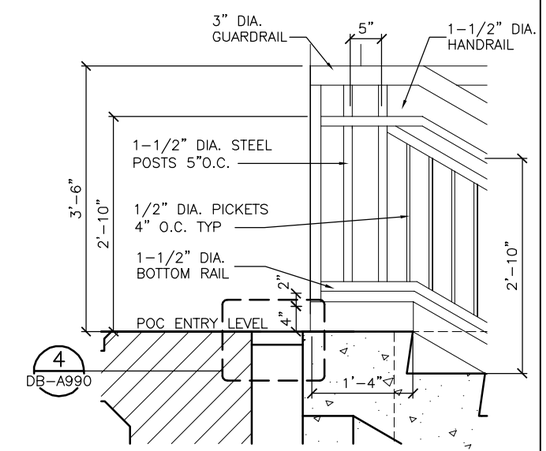

STAIR DETAIL 3 DB-A988
SCALE: 1"=1-'0"

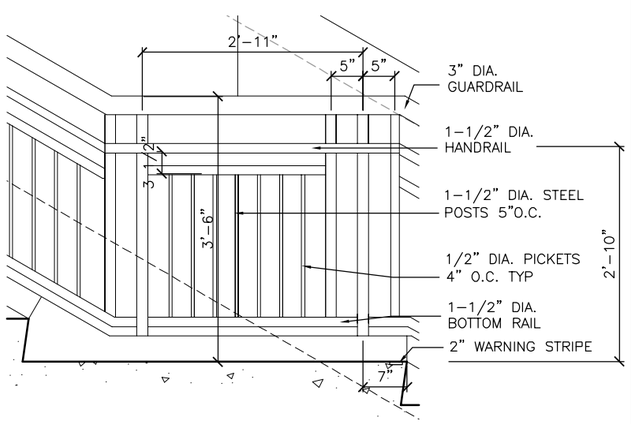

STAIR DETAIL 4 DB-A988
SCALE: 1"=1-'0"

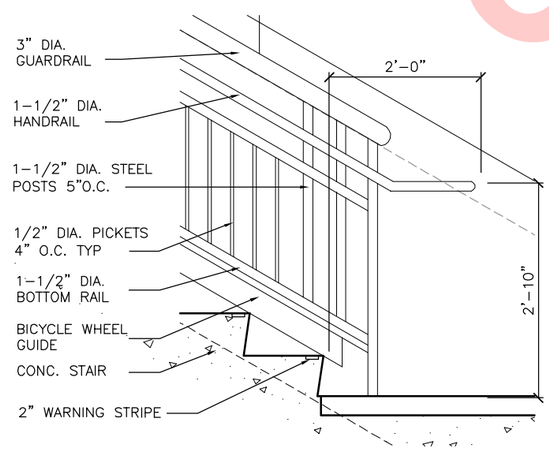

STAIR DETAIL 5 DB-A988
SCALE: 1"=1-'0"

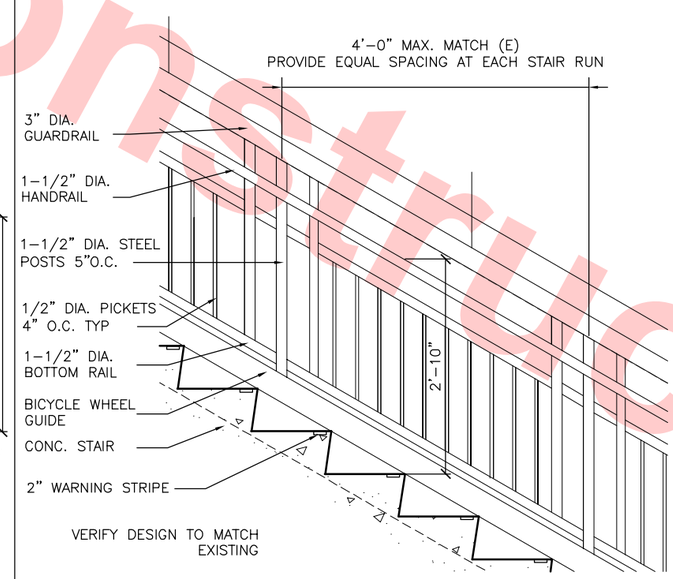

TYP STAIR DESIGN 6 DB-A988
SCALE: 1"=1-'0"

Santa Clara Valley Transportation Authority

____NO EXCEPTIONS TAKEN (NET)
____MAKE CORRECTIONS NOTED (MCN)
____AMEND AND RESUBMIT (A/R)

Any action shown above is subject to the terms of the contract and does not relieve the Contractor of any of its obligations under the contract, including design and detailing.

Contract No.: DB11002F

By: _____ **Date:** _____

Not For Construction

REV	DATE	BY	SUB	APP	DESCRIPTION
0	20130710				READINESS FOR CONSTRUCTION

DESIGNED BY S. DEBNATH
DRAWN BY G. LEVASHOV
CHECKED BY S. DEBNATH
IN CHARGE R. BARLAAN
DATE 20130710

LICENSED ARCHITECT SOMESH DEBNATH No. C21523 STATE OF CALIFORNIA

Skanska Shimmick Herzog
1436 California Circle
Milpitas, California 95035
A Joint Venture

Anil Verma Associates, Inc.
1970 Broadway, Suite 525 Oakland, CA 94612
Phone: (510) 835-2537 Fax: (510) 535-2339

Lockwood, Andrews & Newnam, Inc. A CH2M HILL COMPANY
T·Y·LIN INTERNATIONAL

SUBMITTED _____
APPROVED _____

VTA BART SILICON VALLEY
BART SILICON VALLEY BERRYESSA EXTENSION

LINE, TRACK, STATIONS AND SYSTEMS
DESIGN UNIT 023
MONTAGUE LRT AND MILPITAS POC
STAIR LST2
ENLARGED PLAN, SECTION, AND DETAILS

CADD FILENAME C700-S-DB-A988.dwg
SIZE D | SCALE AS NOTED
CONTRACT NO. C700 | REV. 0
AREA CODE DB | SHEET NO. A988 | PAGE NO. 0655

JosephG Jun 26, 2013 - 12:21pm G:\Current Projects\VTA-Berryessa Extension Project\Station - Milpitas\CAD\Drawings Out\13-0710 C700 MS LRT_POC - RFC Submittal\MS C700-S-DB-A988.dwg

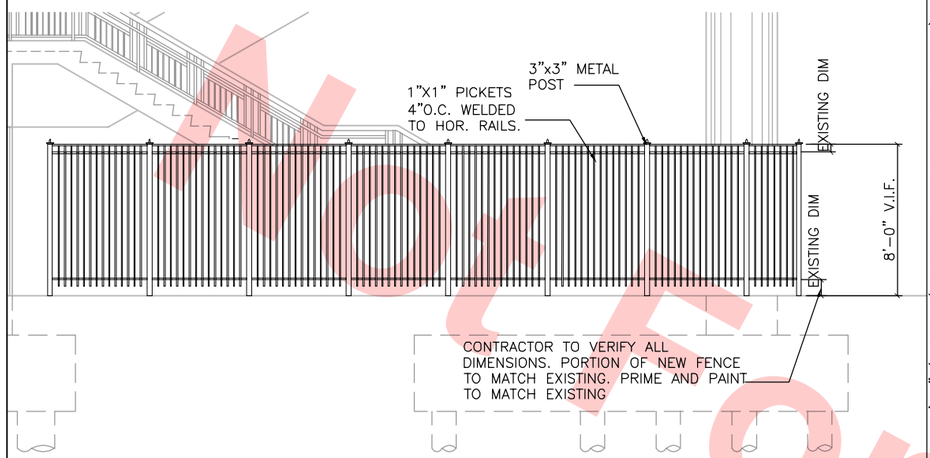

FENCE ELEVATION 1
SCALE: 1/4"=1-'0"
DB-A989 DB-A924 DB-A925

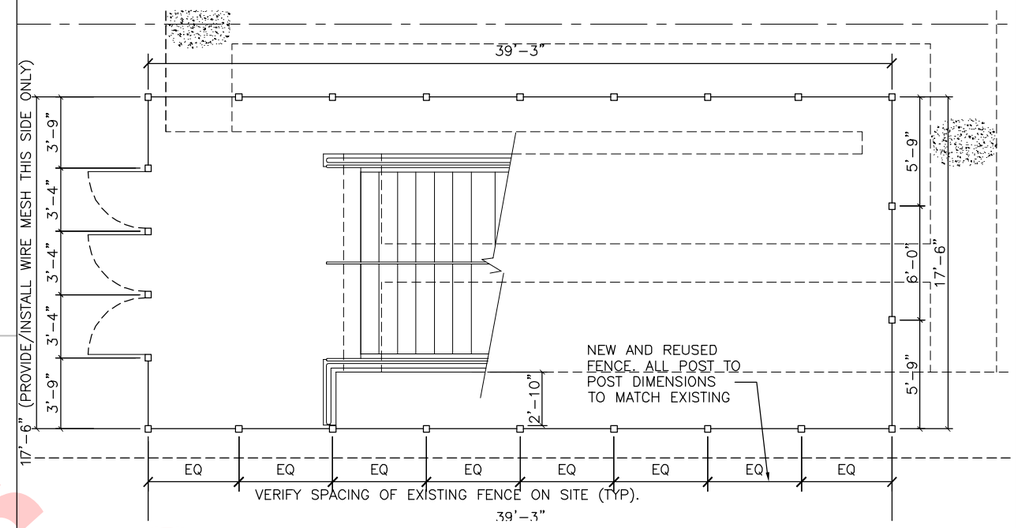

FENCE PLAN 2
SCALE: 1/2"=1-'0"
DB-A989 DB-A915X

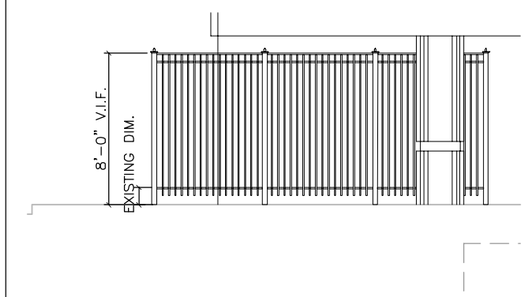

FENCE ELEVATION 3
SCALE: 1/4"=1-'0"
DB-A989 DB-A924

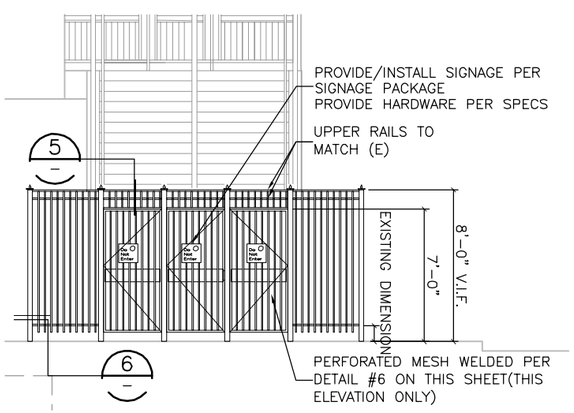

FENCE ELEVATION 4
SCALE: 1/4"=1-'0"
DB-A989 DB-A925

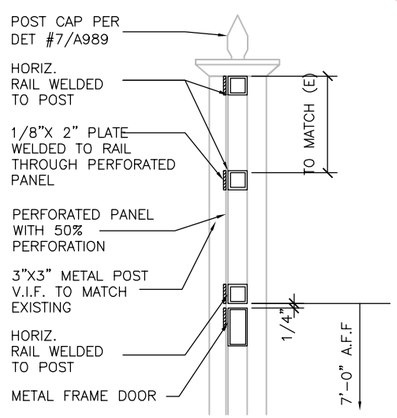

FENCE DETAIL 5
SCALE: 3"=1'-0"
DB-A989

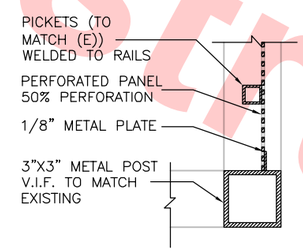

FENCE DETAIL 6
SCALE: 3"=1'-0"
DB-A989

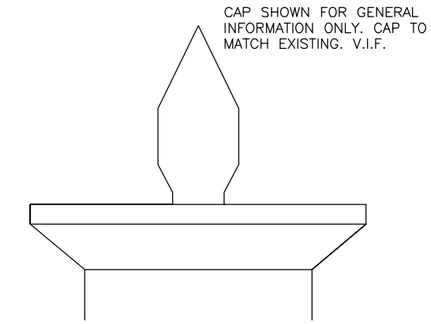

TYP. POST CAP 7
SCALE: 1'-0"=1'-0"
DB-A989

Santa Clara Valley Transportation Authority

____NO EXCEPTIONS TAKEN (NET)
____MAKE CORRECTIONS NOTED (MCN)
____AMEND AND RESUBMIT (A/R)

Any action shown above is subject to the terms of the contract and does not relieve the Contractor of any of its obligations under the contract, including design and detailing.

Contract No.: DB11002F

By: _____ Date: _____

Not For Construction

REV	DATE	BY	SUB	APP	DESCRIPTION
0	20130710				READINESS FOR CONSTRUCTION

DESIGNED BY S. DEBNATH
DRAWN BY G. LEVASHOV
CHECKED BY S. DEBNATH
IN CHARGE R. BARLAAN
DATE 20130710

LICENSED ARCHITECT SOMESH DEBNATH No. C21523 STATE OF CALIFORNIA

Skanska Shimmick Herzog
1436 California Circle Milpitas, California 95035
A Joint Venture

Anil Verma Associates, Inc.
1970 Broadway, Suite 525 Oakland, CA 94612
Phone: (510) 835-2537 Fax: (510) 535-2339
SUBMITTED

Lockwood, Andrews & Newnam, Inc. A CH2M HILL COMPANY
T·Y·LIN INTERNATIONAL
APPROVED

VTA BART SILICON VALLEY
BART SILICON VALLEY BERRYESSA EXTENSION

LINE, TRACK, STATIONS AND SYSTEMS
DESIGN UNIT 023
MONTAGUE LRT AND MILPITAS POC
LRT EMERGENCY EXIT STAIR
FENCEING AT GRADE – DETAILS

CADD FILENAME C700-S-DB-A989.dwg
SIZE D | SCALE AS NOTED
CONTRACT NO. C700 | REV. 0
AREA CODE DB | SHEET NO. A989 | PAGE NO. 0656

JosephG Jun 26, 2013 – 12:21pm G:\Current Projects\VTA-Berryessa Extension Project\Station – Milpitas\CAD\Drawings Out\13-0710 C700 MS LRT_POC – RFC Submittal\MS C700-S-DB-A989.dwg

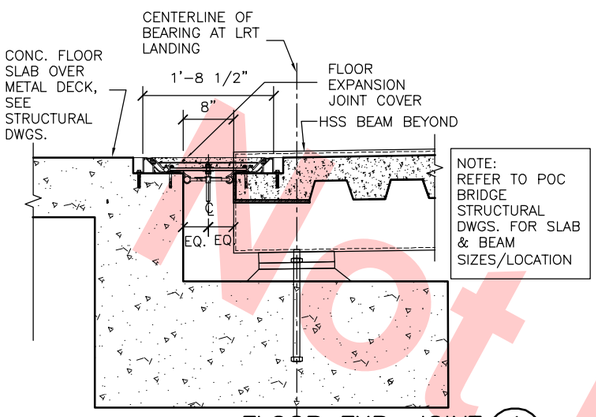

FLOOR EXP. JOINT 1 DB-A990
SCALE: 1"=1'-0"

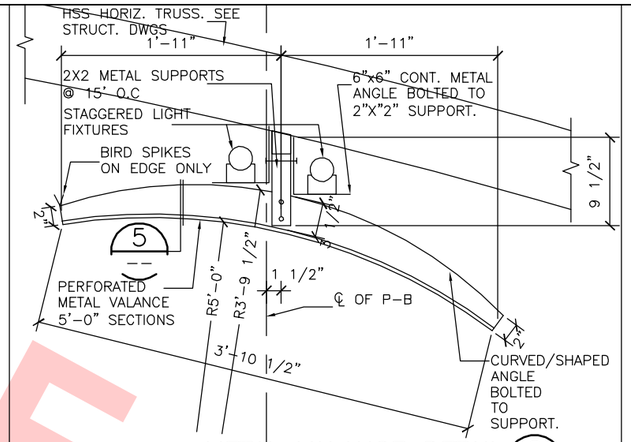

METAL VALANCE DETAIL 2 DB-A990 DB-940
SCALE: 1 1/2"=1'-0"

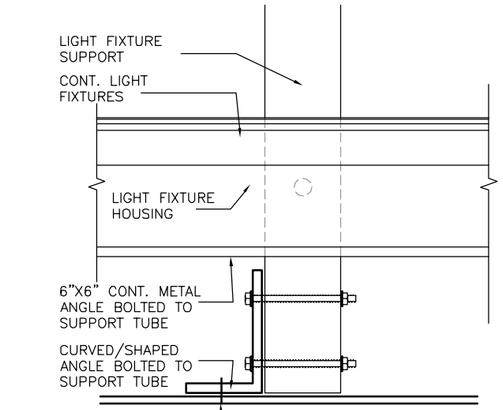

VALENCE CONNECTION 5 DB-A990
SCALE: 6"=1'-0"

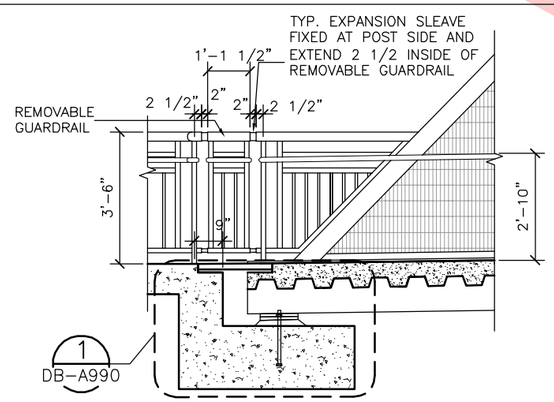

FLOOR EXP. JOINT 6 DB-A990 DB-942
SCALE: 1/2"=1'-0"

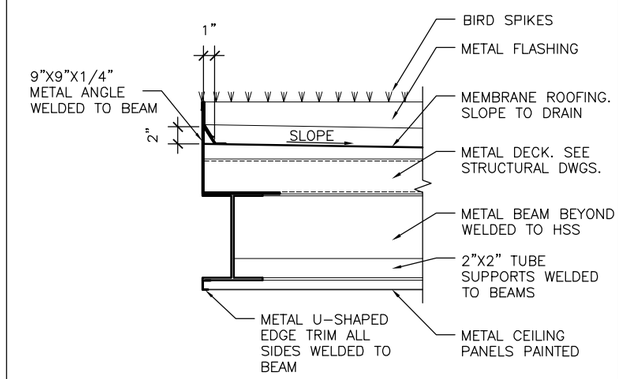

CANOPY DETAIL 9 DB-A990
SCALE: 1 1/2"=1'-0"

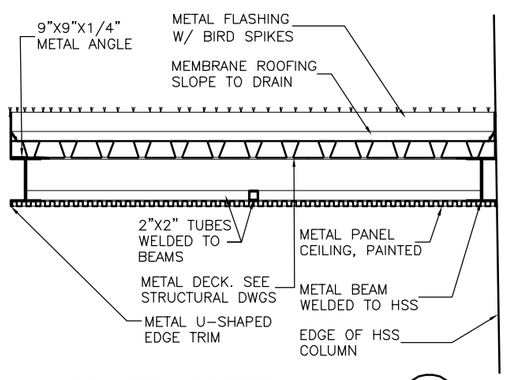

CANOPY SECTION A DB-A990 DB-931 DB-942
SCALE: 3/4"=1'-0"

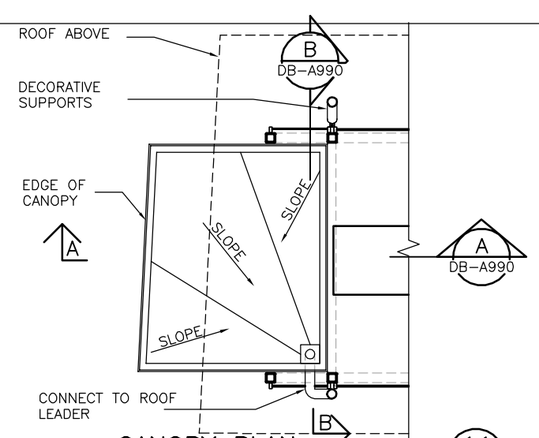

CANOPY PLAN 11 DB-A990 DB-914X
SCALE: 1/4"=1'-0"

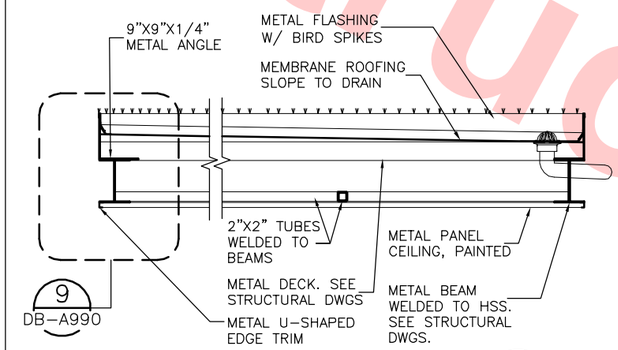

CANOPY SECTION B DB-A990
SCALE: 3/4"=1'-0"

Santa Clara Valley Transportation Authority

____NO EXCEPTIONS TAKEN (NET)
____MAKE CORRECTIONS NOTED (MCN)
____AMEND AND RESUBMIT (A/R)

Any action shown above is subject to the terms of the contract and does not relieve the Contractor of any of its obligations under the contract, including design and detailing.

Contract No.: DB11002F

By: _____ **Date:** _____

Not For Construction

REV	DATE	BY	SUB	APP	DESCRIPTION
0	20130710				READINESS FOR CONSTRUCTION

DESIGNED BY S. SOPORI
DRAWN BY K. STEPANIAN
CHECKED BY S. DEBNATH
IN CHARGE R. BARLAAN
DATE 20130710

LICENSED ARCHITECT SOMESH DEBNATH No. C23523 STATE OF CALIFORNIA

Skanska Shimmick Herzog
1436 California Circle Milpitas, California 95035
A Joint Venture

Anil Verma Associates, Inc.
1970 Broadway, Suite 535 Oakland, CA 94612
Phone: (510) 835-2537 Fax: (510) 835-2339
SUBMITTED

Lockwood, Andrews & Newnam, Inc. A LEO A DALY COMPANY
T·Y·LIN INTERNATIONAL
APPROVED

VTA BART SILICON VALLEY
BART SILICON VALLEY BERRYESSA EXTENSION

LINE, TRACK, STATIONS AND SYSTEMS DESIGN UNIT 023
MONTAGUE LRT AND MILPITAS POC
MISCELLANEOUS DETAILS

CADD FILENAME C700-S-DB-A990.dwg
SIZE D | SCALE 3"=1'-0"
CONTRACT NO. C700 | REV. 0
AREA CODE DB | SHEET NO. A990 | PAGE NO. 0657

JosephC Jun 26, 2013 - 12:31pm. G:\Current Projects\VTA-Berryessa Extension Project\Station - Milpitas\CAD\Drawings Out\13-0710 C700 MS LRT_POC - RFC Submittal\MS C700-S-DB-A990.dwg