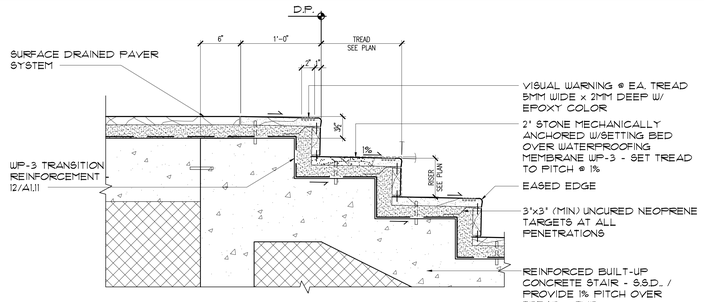

8 EXTERIOR STONE STEPS
SCALE: 1 1/2" = 1'-0"

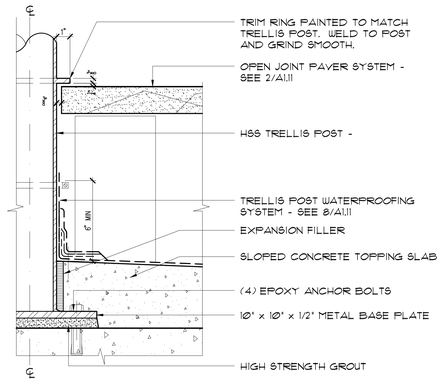

4 TRELLIS POST BASE
SCALE: 3" = 1'-0"

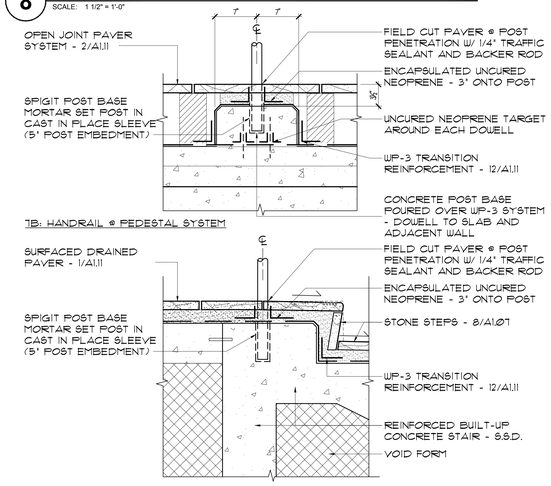

7 EXTERIOR STONE STEPS @ LANDING
SCALE: 1 1/2" = 1'-0"

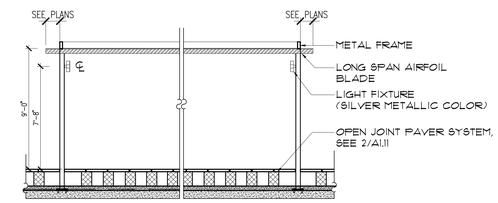

3 TYPICAL SECTION OF TRELLIS
SCALE: 1/4" = 1'-0"

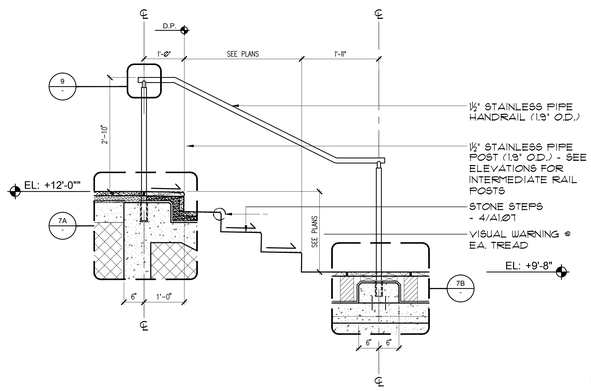

6 POST MOUNTED HANDRAIL CRITERIA
SCALE: 3/4" = 1'-0"

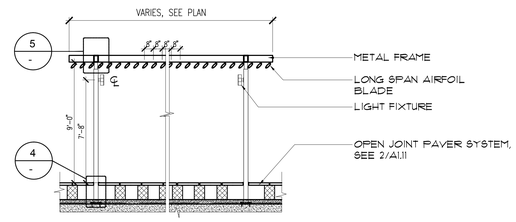

2 TYPICAL SECTION OF TRELLIS
SCALE: 1/4" = 1'-0"

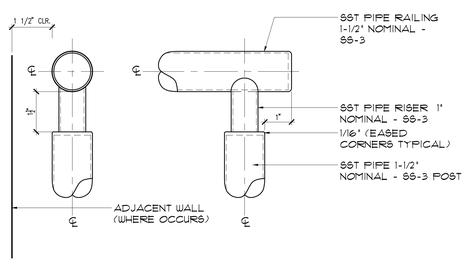

9 HANDRAIL
SCALE: 6" = 1'-0"

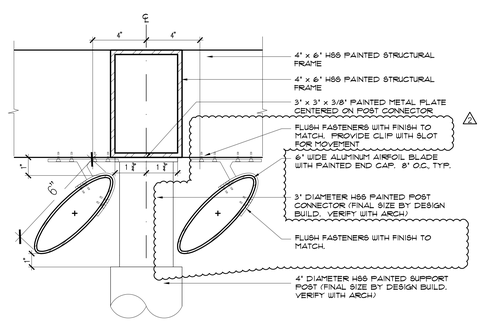

5 TRELLIS AIRFOIL BLADE DETAIL
SCALE: 3" = 1'-0"

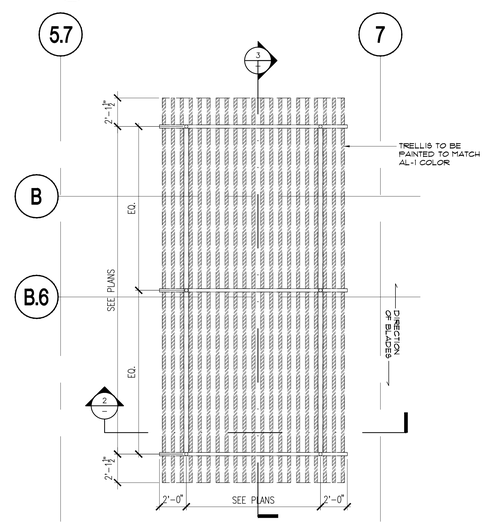

1 TRELLIS PLAN
SCALE: 1/4" = 1'-0"

ONE RINCON HILL

SCB

Solomon Cordwell Buenz & Associates Inc.

Architecture Planning Interior Design

625 North Michigan Avenue
Suite 800
Chicago, Illinois 60611
tel 312 896 1100 fax 312 896 1200

© 2007 Solomon Cordwell Buenz

03	9/24/2012	ARCHITECTURAL ADDENDUM NO.3
02	3/31/08	ADDENDUM NO. 1
01	2/22/08	95% CONSTRUCTION DOCUMENTS

RECORD

One Rincon Hill
401 Harrison Street
San Francisco. CA
PHASE 2

PODIUM DETAILS

Scale: AS NOTED
Drawn By: SCB
Project Number: 2006014
Sheet Number: A1.07