CHOC HOSPITAL TOWER II

455 S. MAIN STREET
ORANGE, CA. 92668

SECOND LEVEL

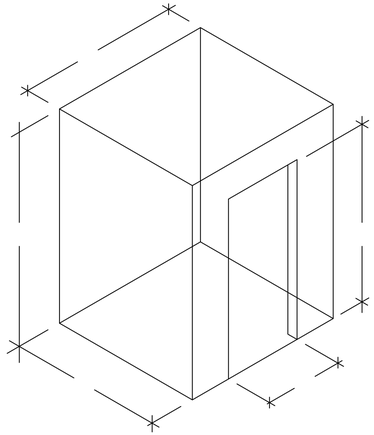

ELEVATOR SIZE

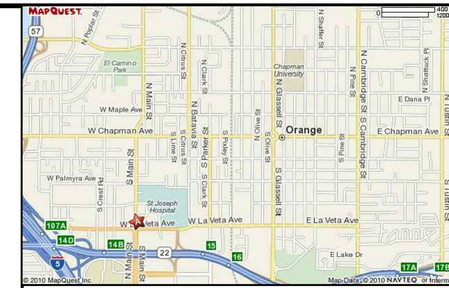

PROJECT LOCATION

DATE	NO	REVISION	SUB. #	BY
8-14-10	1	PER RFI #S 1482,1483,1484,1765	-	JB
10-06-10	2	PER R.L.C. DATED 9-14-10	-	JB
10-28-11		PER CO #134.CI #546	28	JB
1-5-11	3	PER ASI #48 DATED 12-1-10	-	JB
1-19-11	4	PER RFI #2768-0 DATED 1-11-11	-	JB
2-15-11	5	PER R.L.C. DATED 1-20-11	-	JB
6-8-11	6	PER RFI #2659-0 DATED 12-14-10	-	JB
11-21-11	7	PER SKETCH CHANGES TO RM 2.014 ALL FAITHS MEDITATION RM.	-	LK
11-17-11	8	PER RFI #4614-0 DATED 11-17-11	-	JB
X	9	PER C.O. #176 DATED 7-18-11	-	JB
12-2-11	10	PER C.O. 268 DATED 10-31-11	34	JB
12-17-11	11	PER A.S.I. 138 DATED 11-17-11	-	JB
12-30-11	12	PER RED LINE DATED 12-05-11	-	JB
1-16-12	13	PER C.O. #232 DATED 10-10-11	38	JB
2-14-12	14	PER R.L.C. DATED 12-19-11 & 2-1-12	-	JB
2-24-12	15	PER RFI #2980-0 DATED 2-21-12	-	JB

COUNTER TOP NOTES

LAMINATE PLASTIC TOPS:
1. GRADE : W.I. CUSTOM GRADE
2. CORE @ TOPS WITH SINKS: 3/4" PARTICLE BOARD BOISE EVERGREEN MR (NAUF)
3. CORE @ TOPS W/O SINKS: 3/4" PARTICLE BOARD BOISE EVERGREEN (NAUF)
4. FRONT EDGE : PLASTIC LAMINATE.
5. TOP OF SPLASH : SQUARE
6. SPLASH : 4" HIGH SQUARE BUTT (WHERE OCCURS)
7. (NAUF) = (NO ADDED UREA FORMALHYDE)

SOLID SURFACE / EPOXY RESIN TOPS:
1. SOLID SURFACE GRADE : W.I. CUSTOM GRADE
2. EPOXY RESIN GRADE : W.I. PREMIUM GRADE
3. 1/2" MATERIAL TYPICAL.
4. SUB-TOP : 3/4" F.R. PLYWOOD EXT. GRADE (NAUF)
5. (NAUF) = (NO ADDED UREA FORMALHYDE)

STAINLESS STEEL TOPS:
1. 16 GA. STAINLESS STEEL W/ #4 FINISH
2. SUB-TOP : 3/4" F.R. PLYWOOD EXT. GRADE (NAUF)
3. (NAUF) = (NO ADDED UREA FORMALHYDE)

CABINET NOTES

LAMINATE PLASTIC CASEWORK :
1. GRADE : W.I. CUSTOM GRADE
2. CONSTRUCTION - STYLE "A" TYPE(1) FLUSH OVERLAY
3. EXTERIOR : LAMINATE PLASTIC
4. INTERIOR : WHITE MELAMINE U.N.O.
6. CORE : 3/4" PARTICLE BOARD
7. CASE EDGES : MATCHING 1MM PVC
8. BACKS: 3/8" PARTICLE BOARD
9. BASE CABINET TOPS TO BE 3/4" FULL TOPS.
10. SHELVES TO BE 3/4" PART. BD.UP TO 32"L 1" ABOVE 32"L. LEADING EDGE TO HAVE 1MM PVC TO MATCH EXT. COLOR.
11. ALL UPPER CABT. TOPS & BOTTOMS TO BE 1" THICK.
12. DOOR & DRAWER FRONTS: 3/4" PARTICLE BOARD
13. DOOR & DRAWER EDGING: MATCHING 3MM PVC ACID RESIST.. OUTSIDE CORNERS TO HAVE 1/8" RADIUS.
14. DRAWER SUB FRONTS,SIDES & BACKS TO BE 1/2" WHITE MELAMINE P.B. PANELS. DADO SIDES TO RECEIVE FRNT & BACK GLUED & PINNED TOGETHER.
15. DRAWER BOTTOM: 1/4" WHITE MELMINE P.B. LET IN TO SUB-FRONT, SIDES & BACK.
16. ALL DRAWERS TO HAVE A 1/4" WHITE MELMINE P.B. DUST PANEL ABOVE EXCEPT AT A COUNTERTOP.
17. ALL CABINET TOEKICKS TO BE 3/4" TREATED EXT. PLYWD.
18. ALL PARTICLE BOARD TO BE BOISE EVERGREEN. (NO ADDED UREA FORMALHYDE)
19. ALL WALL SCRIBE PIECES TO BE FLUSH W/ CABINET DOORS & DRAWERS.

GENERAL NOTES

1. G.C. TO PROVIDE ALL BACKING AS REQUIRED
2. G.C. TO PROVIDE ALL STRUCTURAL SUPPORTS WHERE REQUIRED AND NOTED U.N.O.
3. ALL PLUMBING BY OTHERS. G.C. TO COORDINATE
4. ALL ELECTRICAL BY OTHERS. G.C. TO COORDINATE
5. ALL DIMENSIONS TO VERIFIED
6. FILLING OF ALL NAIL HOLES AND SCREW HOLES IS BY OTHERS ON PAINT GRADE MATERIAL
7. ALL RAW MATERIAL TO BE PRIMED AND FINISHED BY OTHERS
8. CAULKING OF PAINT GRADE MOULDING TO DRYWALL IS BY OTHERS

DRAWING SHEET INDEX

ITEM	ROOM	DESCRIPTION	SHEET
-	-	COVER SHEET	COVER
-	-	FIRST LEVEL FLOOR PLAN SOUTHEAST AREA	FP-2A
-	-	FIRST LEVEL FLOOR PLAN SOUTHWEST AREA	FP-2B
-	-	FIRST LEVEL FLOOR PLAN NORTHWEST AREA	FP-2C
-	-	FIRST LEVEL FLOOR PLAN NORTHEAST AREA	FP-2D
2-113 2-113	2.011	TOPS & CABINETS CONFERENCE ROOM	2-1
2-122	2.035	TOPS & CABINETS RESIDENTS LOUNGE	2-2
2-120	2.034	TOPS & END PANELS OFFICE RESIDENTS WORKSTATIONS	2-3
2-109 2-111	2.030 2.032	TOPS & CABINETS OPEN WORK CLINICAL DIETICIANS OFFICE CHIEF RESIDENTS WORKSTATIONS	2-4
2-111 2-113 2-132	2.026.03.A 2.057 2.059	RESTROOM VANITIES TOILET PUB. MALE TOILET PUB. FEMALE, VEST. LOCKERS	2-5
2-107 2-109 2-165	2.012 2.012.00.B	TOP & CABINETS FAMILY SERVICE LIBRARY & OFFICE	2-6/2-6.1
2-106 2-106	2.014	WALL PANELS & CABINETS ALL FAITHS MEDITATION ROOM	2-7 - 2-7.3
2-111 2-118 2-120	2.037 2.007 2.037.05	TOPS & CABINETS, GIFT SHOP STORAGE, MED. STAFF SERV. & CONFERENCE	2-8
2-122 2-120	2.037.00.A 2.042	TOPS & CABINETS OFFICE OPEN AREA, ADMIN. RECEPTION	2-9
2-111 2-122 2-120	2.026.06 2.040.02 2.048	TOP & CABINETS/SHELVES, WORK ROOM, MUSIC THERAPY & HOUSEKEEPING	2-10
2-109 2-109	2.074.02 2.075	TOP & CABINETS KITCHENETTE & ACTIVITY ROOM	2-11
2-109 2-109	2.074 2.076	TOPS & CABINETS TEEN ROOM & PRE-TEEN ROOM	2-12
2-115 2-117 2-115	2.026.03 2.037.09	CABINETS, BALLET BAR STORAGE GENERAL & STAFF EXERCISE	2-13 2-13.1
2-107 2-119 2-165	2.084 2.084.00.C	TOP & CABINETS WORKROOM & WORKROOM CHILD LIFE	2-14
2-111	2.075	S. STL. WALL / SILL PANELS WD. WALL PANELS ,CABINETS	2-15 THRU 2-15.4
2-119	2.004.00.A	INFO. / SECURITY DESK	2-30
2-119	2.009	GIFT SHOP COUNTER	2-31 2-31.1
2-109	2.012	FAMILY SERVICES DESK	2-32
2-122	2.037.00.A	ADMIN. RECEPTION DESK	2-33
2-130	2.041.00.A	BOOTHS & CABINET PUBLIC DINING AREA	2-34 2-34.1
2-129	2.041.00.B	BANQUETTE & WALL MD DINING / SERVING	2-35 2-35.1 2-35.2
2-127	2.041.00.B	BANQUETTE & WALL MD DINING / SERVING	2-36
2-135	2.041.00.B	CABINET & TOP MD DINING / SERVING	2-36.1
2-113 2-113	2.009	SLATWALL & GLASS SHELVES GIFT SHOP	2-37 2-37.1
2-133	2.041.00.E 2.050.00.C 2.080.00.C	DECKING ROOF TERRACE / EMPLOYEE DINING	2-38 2-38.1 - 3

ITEM	ROOM	DESCRIPTION	SHEET
2-139 2-137	2.028.11	TOPS & CABINETS CONFERENCE ROOM A	2.41
2-139 2-139	2.028.06	TOPS & CABINETS CONFERENCE ROOM B	2.42
2-146 2-147	2.028.02	TOPS & CABINETS CONFERENCE ROOM C	2.43
2-142 2-143	2.113.20	TOPS & CABINETS RECEPTION & WAITING	2.44
2-146 2-147	2.113.07	WALL PANELS / CLOSET SHELF CEO OFFICE	2.45 2.45.1
2-146	2.113.08	TOPS & CABINETS CEO RESTROOM	2.46
2-147	2.113.17	TOPS & CABINETS CONFERENCE 1	2.47
2-146 2-148	2.113.22	TOPS & CABINETS BOARDROOM	2.48
2-152 2-151	2.113.09 2.113.26	TOPS & CABINETS STAFF LOUNGE / EXEC. ASSIST.	2.49
2-152 2-151	2.113.15 2.113.16	TOPS & CABINETS CONF. 2 / ALCOVE BEVERAGE	2.50
2-152 2-151	2.113.28 2.113.29	TOPS TOILETS MALE / FEMALE	2.51
2-152 2-151	2.026.01 2.026.02	TOPS TOILETS MALE / FEMALE	2.51
2-152	2.113.38	TOPS & CABINETS COPY/FILE ROOM	2.51
2-152	2.113.19	SHELF HOUSEKEEPING	2.51
2-162 2-161	VARIES	WOOD BASE & CHAIRAIL	M-1,M-2
2-162	2.063.00.C 2.115.00.C	SOLIDSHELF HOUSEKEEPING	2.52

WALL PANEL NOTES

STAINLESS STEEL WALL PANELS @ RADIO LOLIPOP

1. CHEMETAL #710 BRUSHED STAINLESS STEEL
2. CORE : 1/2" RIRE RATED PLYWOOD NO ADDED UREA FORMALDEHYDE.

ABBREVIATIONS

BO - BY OTHERS
CL - CENTER LINE
FD - FIELD DIMENSIONS
FE - FINISHED END
HT - HEIGHT
NIC - NOT IN CONTRACT
OPP - OPPOSITE
PL - PLASTIC LAMINATE
PT - PAINT
SIM - SIMILAR
TBD - TO BE DETERMINED
TYP - TYPICAL
WD - SOLID WOOD OR VENEER
UNO - UNLESS NOTED OTHERWISE
VIF - VERIFY IN FIELD

SYMBOLS

FINISH SCHEDULE

SEE INDIVIDUAL SHEETS

PROJECT :
CHOC HOSPITAL TOWER II
455 S. MAIN STREET ORANGE, CA. 92668

COVER SHEET

CONTRACTOR: McCARTHY

ARCHITECT : FKP

COPYRIGHT
ALL IDEAS DESIGNS, ARRANGEMENTS AND PLANS INDICATED OR REPRESENTED BY THIS DRAWING ARE OWNED BY AND THE PROPERTY OF PACIFIC MILLWORK. THEY WERE CREATED,EVOLVED AND DEVELOPED FOR USE ON, AND IN CONECTION WITH THE SPECIFIED PROJECT. NONE OF SUCH IDEAS, DESIGNS, ARRANGEMENT OF PLANS SHALL BE USED BY OR DISCLOSED TO ANY PERSON, FIRM OR CORPORATION FOR ANY PURPOSE WHATSOEVER WITHOUT THE WRITTEN PERMISSION OF PMI.

FIELD VERIFICATION
P.A.M. SHOP DRAWINGS ARE MADE FOR THE EXCLUSIVE USE OF THE PACIFIC MILLWORK. OTHER TRADES USING DRAWING USE THEM AT THEIRE OWN RISK. DIMENSIONS ON THESE DRAWINGS MAY NOT BE ALWAYS NOTED, FIELD CONDITIONS MAY REQUIRE CHANGES IN DIMENSIONS, SO OTHER TRADES USING THESE DRAWINGS MUST TAKE THEIR OWN FIELD DIMENSIONS.

PACIFIC ARCHITECTURAL MILLWORK
2041 E. 1ST ST. LA HABRA CA. 90631
PH: (714) 525-8059 FAX: (714) 525-8373

DATE: 05-10-10	
DRAWN BY: JB	SCALE: NOTED
JOB: 3635	SUBMITTAL: 06
DWG: COVER	

ITEM SCHEDULE

ITEM #	ROOM #	SHEET #
2-106	2.075	2-11
2-111	2.075	2-15 - 2-15.4
2-112	2.004.00.A	2-30
2-142	2.113.20	2.44
2-143	2.113.20	2.44
2-144	2.113.07	2.45
2-145	2.113.07	2.45.1
2-146	2.113.08	2.46
2-147	2.113.17	2.47
2-148	2.113.22	2.48
2-149	2.113.22	2.48
2-150	2.113.26	2.49
2-151	2.113.09	2.49
2-152	2.113.15	2.50
2-153	2.113.16	2.50
2-154	2.113.28	2.51
2-155	2.113.29	2.51
2-158	2.113.38	2.51
2-159	2.113.19	2.51
2-162	2.115.00.C	2.52

30 ON HOLD

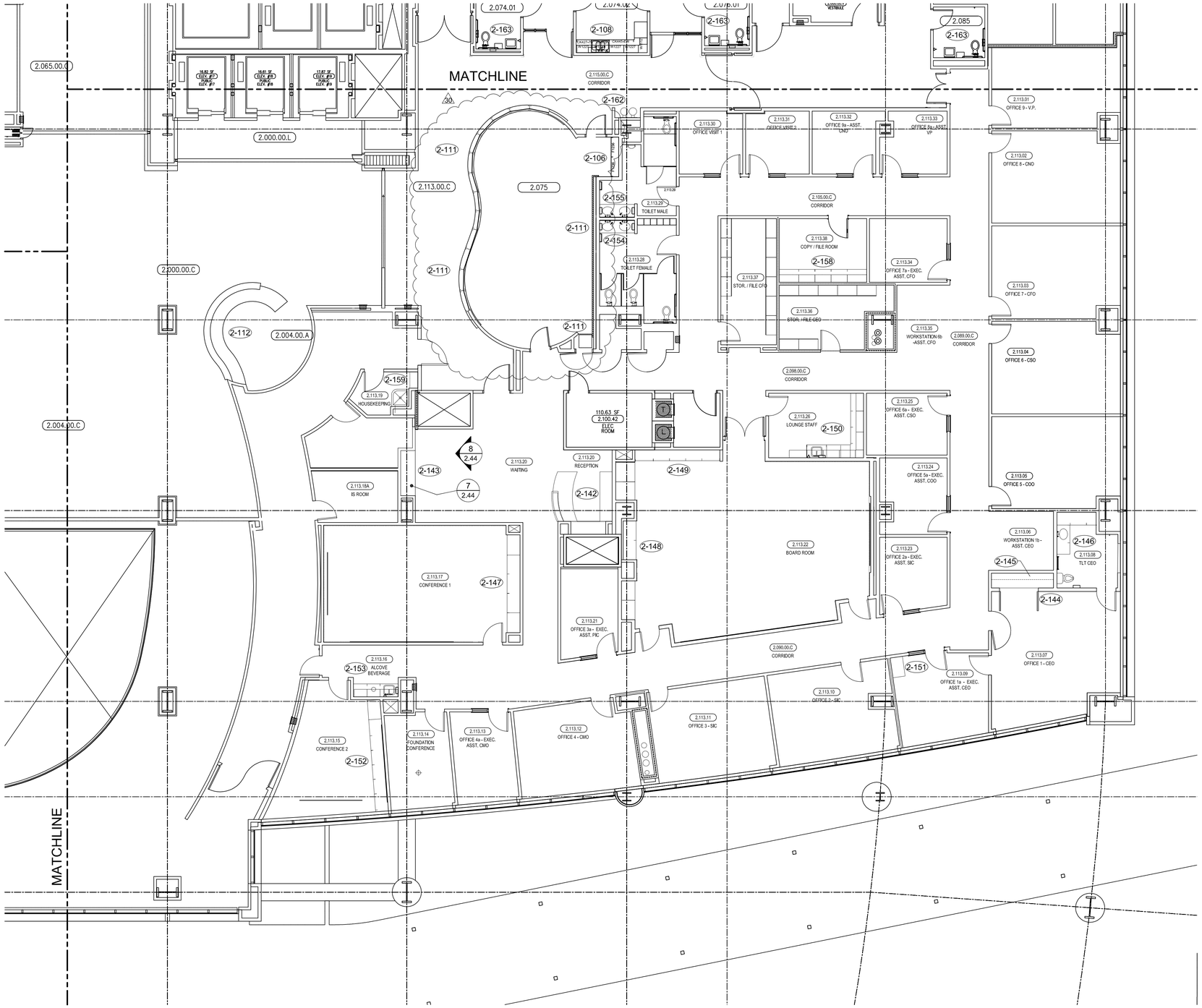

A LEVEL 2 FLOOR PLAN
SCALE: 1/8"=1'
ARCH. REF: A3.21

RELEASE FOR PRODUCTION
SIGNATURE: _____
DATE: _____
NOTE: NO CHANGES CAN BE MADE AFTER AUTHORIZATION TO PROCEED.

DATE	NO	REVISION	SUB. #	BY
–	X	X	–	X
10-06-10	1	PER R.L.C. DATED 9-14-10	–	JB
10-28-11	2	PER CO #134,CI #546	28	JB
1-16-12	3	PER CO #232 DATED 10-10-11	38	JB
–	4		–	–
–	5		–	–
–	6		–	–

PROJECT :
CHOC HOSPITAL
TOWER II
455 S. MAIN STREET
ORANGE, CA. 92868

ITEM #:
FLOOR : x
ROOM # : x
ITEM : x
REF : x

CONTRACTOR :
McCARTHY

ARCHITECT :
FKP ARCHITECTS

COPYRIGHT
ALL IDEAS DESIGNS, ARRANGEMENTS AND PLANS INDICATED OR REPRESENTED BY THIS DRAWING ARE OWNED BY, AND THE PROPERTY OF PJ.M. AND WERE CREATED,EVOLVED AND DEVELOPED FOR USE ON, AND IN CONNECTION WITH THE SPECIFIED PROJECT. NONE OF SUCH IDEAS, DESIGNS, ARRANGEMENT OF PLANS SHALL BE USED BY OR DISCLOSED TO ANY PERSON FOR ANY PURPOSE WHATSOEVER WITHOUT THE WRITTEN PERMISSION OF P.J.M..

FIELD VERIFICATION
P.J.M. SHOP DRAWINGS ARE MADE FOR THE EXCLUSIVE USE OF P.J.M. AND ANY OTHER TRADES USING THESE DRAWING USE THEM AT THERE OWN RISK. DIMENSIONS ON THESE DRAWINGS MAY NOT BE ALWAYS NOTED, FIELD CONDITIONS MAY REQUIRE CHANGES IN DIMENSIONS, SO OTHER TRADES USING THESE DRAWINGS MUST TAKE THEIR OWN FIELD DIMENSIONS.

PACIFIC
ARCHITECTURAL MILLWORK
1041 LESLIE ST. LA HABRA, CA. 90631
PH: (714) 526-2093 FAX: (714) 526-2073

DATE: 05-10-10
DRAWN BY: JB
SCALE: NOTED
JOB: 3635
SUBMITTAL: 06
DWG: FP-2A
SHEET(S):

ITEM SCHEDULE

ITEM #	ROOM #	SHEET #
2-100 OMIT	2.030	2-4
2-100.1	2.014	2-7
2-100.2	2.014	2-7
2-100.3	2.014	2-7
2-101	2.012	2-6/2-6.1
2-102	2.012	2-32
2-103	2.012	2-6/2-6.1
2-104	2.012.00.B	2-6/2-6.1
2-114 OMIT	2.011	2-1
2-115 OMIT	2.011	2-1
2-117 OMIT	2.026.03.A	2-5
2-117.1 OMIT	2.026.03	2-13
2-117.2 OMIT	2.026.03	2-13.1
2-119 OMIT	2.032	2-4
2-120 OMIT	2.034	2-3
2-121 OMIT	2.035	2-2
2-122 OMIT	2.037.00.A	2-33
2-113.1	2.009	2-37,2-37.1
2-113.2	2.009	2-37,2-37.1
2-136	2.028.11	2.41
2-137	2.028.11	2.41
2-138	2.028.06	2.42
2-139	2.028.06	2.42
2-140	2.028.02	2.43
2-141	2.028.02	2.43
2-156	2.026.01	2.51
2-157	2.026.02	2.51

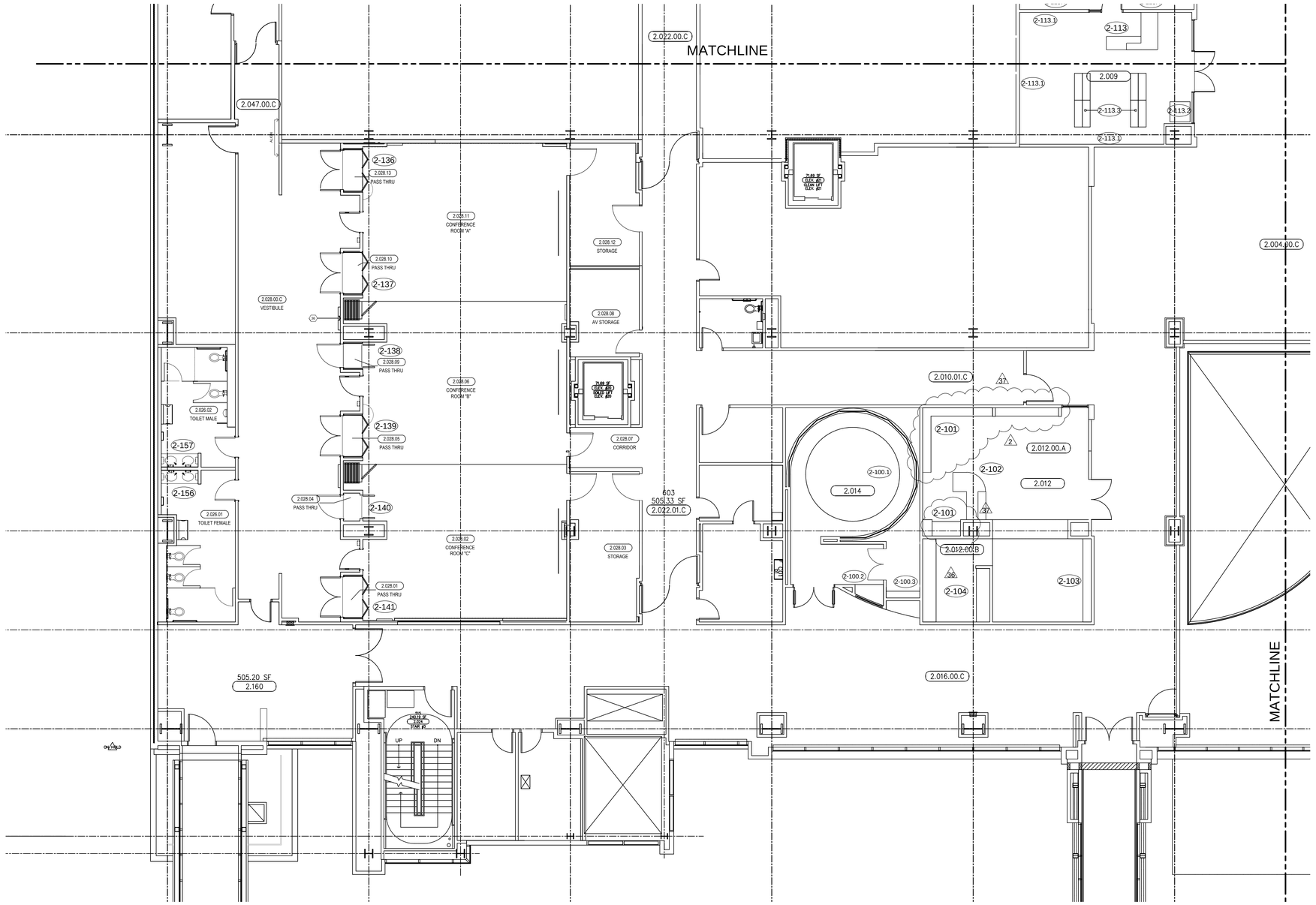

B LEVEL 2 FLOOR PLAN
SCALE: 1/8"=1'
ARCH. REF: A3.11

NO	DATE	REVISION	SUB #	BY
1	10-06-10	PER R.L.C. DATED 9-14-10	28	JB
2	10-28-11	PER CO #134,CI #546	28	JB
3	4-26-12	PER R.F.I. 5493-1 DATED 4-11-12	28	JB
4				
5				
6				

PROJECT : CHOC HOSPITAL TOWER II
455 S. MAIN STREET ORANGE, CA. 92868

ITEM #:

FLOOR : X
ROOM # : X
ITEM : X
X
REF : X

CONTRACTOR : McCARTHY

ARCHITECT : FKP ARCHITECTS

COPYRIGHT

ALL IDEAS,DESIGNS, ARRANGEMENTS AND PLANS INDICATED OR REPRESENTED BY THIS DRAWING ARE OWNED BY, AND THE PROPERTY OF P.A.M. AND WERE CREATED,EVOLVED AND DEVELOPED FOR USE ON, AND IN CONNECTION WITH THE SPECIFIED PROJECT. NO PART OF SUCH IDEAS, DESIGNS, ARRANGEMENTS OR PLANS MAY BE USED BY ANY PERSON FOR ANY PERSON, FIRM OR CORPORATION FOR ANY PURPOSE WHATSOEVER WITHOUT THE WRITTEN PERMISSION OF P.A.M.

FIELD VERIFICATION

P.A.M. SHOP DRAWINGS ARE MADE FOR THE EXCLUSIVE USE OF P.A.M. AND ANY OTHER TRADES USING THESE DRAWING USE THEM AT THERE OWN RISK. DIMENSIONS ON THESE DRAWINGS MAY NOT BE ALWAYS NOTED. FIELD CONDITIONS MAY REQUIRE CHANGES IN DIMENSIONS. SO ETHER TRADES USING THESE DRAWINGS MUST TAKE THEIR OWN FIELD DIMENSIONS.

PACIFIC ARCHITECTURAL MILLWORK
1041 LESLIE ST. LA HABRA, CA. 90631
PH: (714) 525-2059 FAX: (714) 525-2673

DATE: 05-10-10
DRAWN BY: JB
SCALE: NOTED
JOB: 3635
SUBMITTAL: 06
DWG: FP-2B
SHEET(S):

RELEASE FOR PRODUCTION
SIGNATURE: _____
DATE: _____
NOTE: NO CHANGES CAN BE MADE AFTER AUTHORIZATION TO PROCEED.

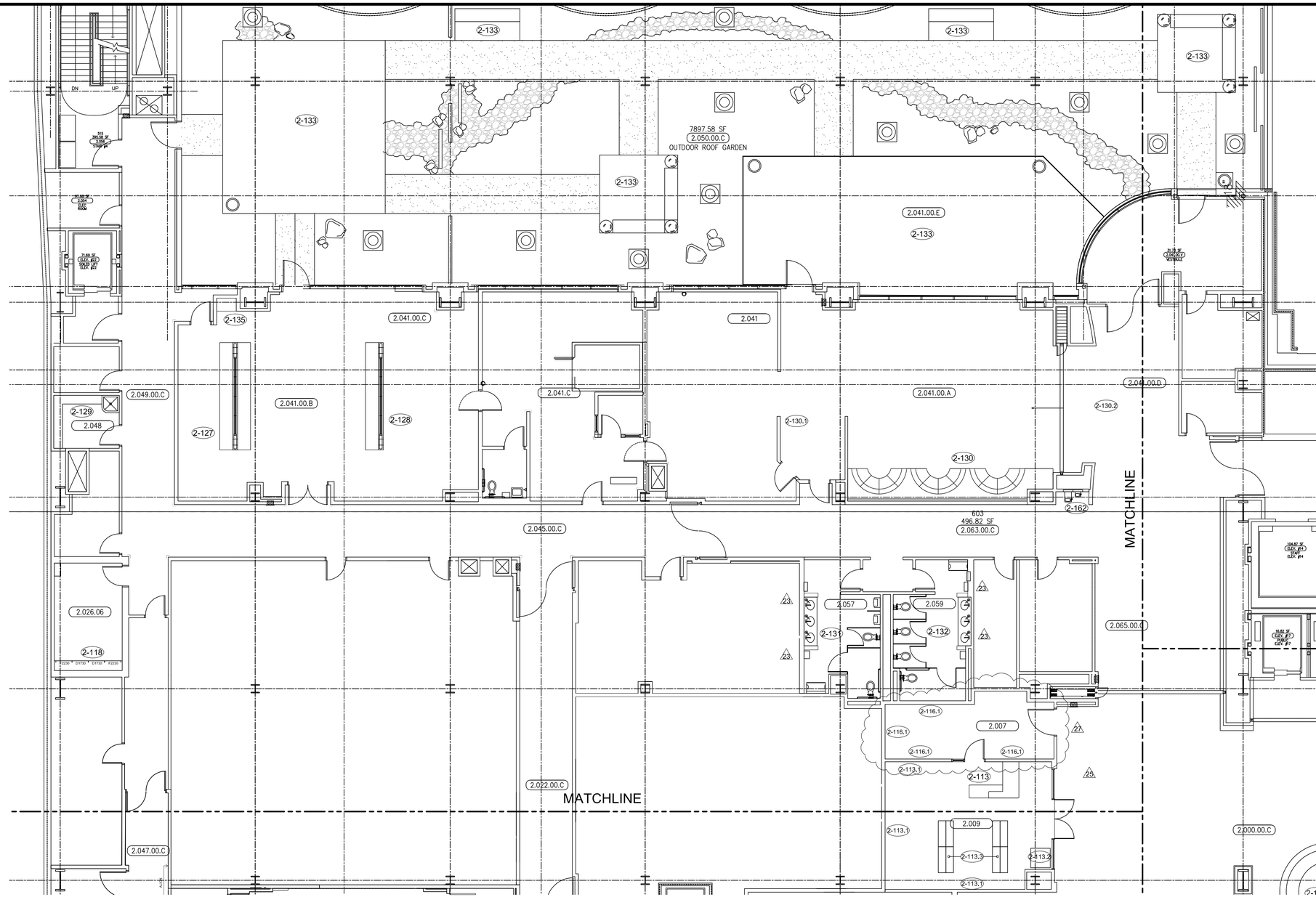

C LEVEL 2 FLOOR PLAN
SCALE: 1/8"=1'
ARCH. REF: A3.11

ITEM SCHEDULE		
ITEM #	ROOM #	SHEET#
2-113	2.009	2-31,2-31.1
2-113.1	2.009	2-37,2-37.1
2-113.2 OMIT	2.009	2-37,2-37.1
2-113.3 OMIT	2.009	2-37,2-37.2
2-113.4	2.007	2-37.3
2-116 OMIT	2.037	2-8
2-116.1	2.007	2-37.3
2-116.2 OMIT	2.037.09	2-13
2-118	2.026.06	2-10
2-123 OMIT	2.037.00.A	2-9
2-124 OMIT	2.040.02	2-10
2-125 OMIT	2.042	2-9
2-126 OMIT	2.037.05	2-8
2-127	2.041.00.B	2-36
2-128	2.041.00.B	2-35.2-35.1,2-35.2
2-129	2.048	2-10
2-130	2.041.00.A	2-34,2-34.1
2-130.1	2.041.00.A	2-40
2-130.2	2.041.00.D	2-40.1
2-131	2.057	2-5
2-132	2.059	2-5
2-133	2.041.00.E,2.050.00.C	2-38,2-38.1 - 3
2-135	2.041.00.B	2-36.1
2-162	2.063.00.C	2.52

△ ON HOLD

DATE	NO	REVISION	SUB. #	BY
–	–	X	–	X
10-06-10	1	PER R.L.C. DATED 9-14-10	–	JB
11-17-11	2	PER RFI #4614-0 DATED 10-11-11	–	JB
12-2-11	3	PER C.O. 268 DATED 10-31-11	34	JB
12-17-11	4	PER A.S.I. 136 DATED 11-17-11	–	JB
–	5	–	–	–
	6			

PROJECT :
CHOC HOSPITAL
TOWER II
455 S. MAIN STREET
ORANGE, CA. 92868

ITEM #:

FLOOR : x
ROOM # : x
ITEM : x
REF : x

CONTRACTOR :
McCARTHY

ARCHITECT :
FKP ARCHITECTS

COPYRIGHT
ALL IDEAS DESIGNS, ARRANGEMENTS AND PLANS INDICATED OR REPRESENTED BY THIS DRAWING ARE OWNED BY, AND THE PROPERTY OF PJ.M. AND WERE PREPARED BY OR UNDER THE DIRECTION OF PJ.M. AND IN CONNECTION WITH THE SPECIFIED PROJECT. NONE OF SUCH IDEAS, DESIGNS, ARRANGEMENT OF PLANS SHALL BE USED BY OR DISCLOSED TO ANY PERSON, FIRM OR CORPORATION FOR ANY PURPOSE WHATSOEVER WITHOUT THE WRITTEN PERMISSION OF PJ.M.

FIELD VERIFICATION
P.J.M. SHOP DRAWINGS ARE MADE FOR THE EXCLUSIVE USE OF P.J.M. AND ANY OTHER TRADES USING THESE DRAWINGS. DIMENSIONS ARE TAKEN FROM DIMENSIONS ON THESE DRAWINGS MAY NOT BE ALWAYS NOTED. FIELD CONDITIONS MAY REQUIRE CHANGES IN DIMENSIONS. SO OTHER TRADES USING THESE DRAWINGS MUST TAKE THEIR OWN FIELD DIMENSIONS.

PACIFIC ARCHITECTURAL MILLWORK
1041 LESLIE ST. LA HABRA, CA. 90631
PH: (714) 525-2089 FAX: (714) 525-2673

DATE: 05-10-10
DRAWN BY: JB
SCALE: NOTED
JOB: 3635
SUBMITTAL: 06
DWG: FP-2C
SHEET(S):

RELEASE FOR PRODUCTION
SIGNATURE:
DATE:
NOTE: NO CHANGES CAN BE MADE AFTER AUTHORIZATION TO PROCEED.

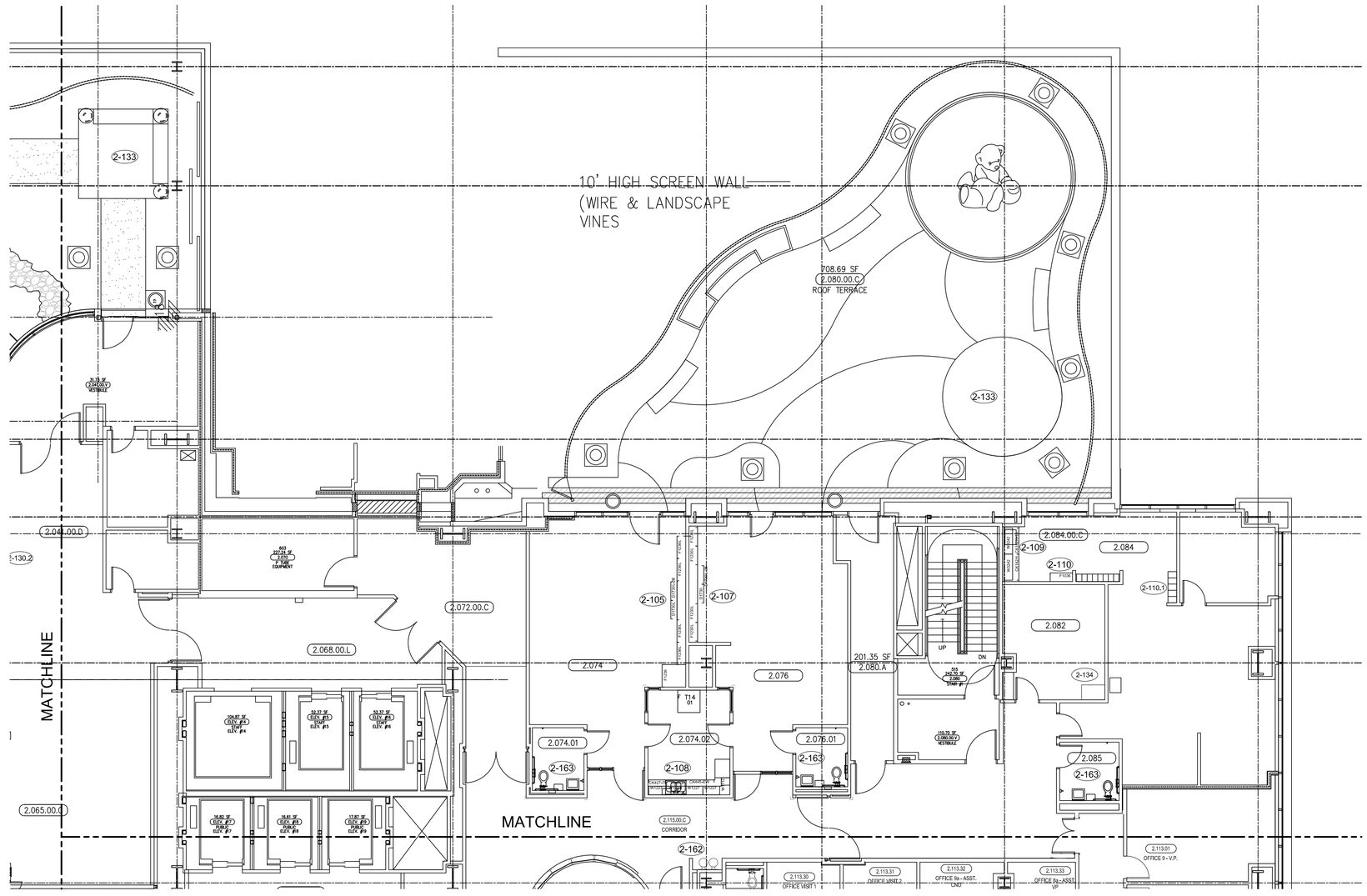

D LEVEL 2 FLOOR PLAN

SCALE: 1/8"=1'
ARCH. REF: A3.11

NORTH

ITEM SCHEDULE

ITEM #	ROOM #	SHEET #
2-105	2.074	2-12
2-107	2.076	2-12
2-108	2.074.02	2-11
2-109	2.084.00.C	2-14
2-110	2.084.00.C	2-14
2-110.1	2.084	2-14
2-133	2.080.00.C	2-38,2-38.1 - 3
2-134	2.082	2-12
2-163	2.074.01	2-39
2-163	2.076.01	2-39
2-163	2.085	2-39

RELEASE FOR PRODUCTION
SIGNATURE: _____
DATE: _____
NOTE: NO CHANGES CAN BE MADE AFTER AUTHORIZATION TO PROCEED.

DATE	NO	REVISION	SUB. #	BY
	1	X		X
	2			
	3			
	4			
	5			
	6			

PROJECT :
CHOC HOSPITAL
TOWER II
455 S. MAIN STREET
ORANGE, CA. 92868

ITEM #:
FLOOR : x
ROOM # : x
ITEM : x
x
REF : x

CONTRACTOR : McCARTHY
ARCHITECT : FKP ARCHITECTS

COPYRIGHT
ALL IDEAS DESIGNS, ARRANGEMENTS AND PLANS INDICATED OR REPRESENTED BY THIS DRAWING ARE OWNED BY, AND THE PROPERTY OF P.A.M. AND WERE CREATED,EVOLVED AND DEVELOPED FOR USE ON, AND IN CONNECTION WITH, THE SPECIFIED PROJECT. NONE OF SUCH IDEAS, DESIGNS, ARRANGEMENT OF PLANS SHALL BE USED BY OR DISCLOSED TO ANY PERSON, FIRM OR CORPORATION FOR ANY PURPOSE WHATSOEVER WITHOUT THE WRITTEN PERMISSION OF P.A.M.

FIELD VERIFICATION

P.A.M. SHOP DRAWINGS ARE MADE FOR THE EXCLUSIVE USE OF P.A.M. AND ANY OTHER TRADES USING THESE DRAWING USE THEM AT THERE OWN RISK. DIMENSIONS SHOWN ON THESE DRAWINGS ARE NOT VERIFIED. FIELD CONDITIONS MAY REQUIRE CHANGES IN DIMENSIONS. SO OTHER TRADES USING THESE DRAWINGS MUST TAKE THEIR OWN FIELD DIMENSIONS.

PACIFIC ARCHITECTURAL MILLWORK
104 LESLIE ST. LA HABRA, CA. 90631
PH: (714) 526-2659 FAX: (714) 526-2673

DATE: 05-10-10
DRAWN BY: JB
SCALE: NOTED
JOB: 3635
SUBMITTAL: 06
DWG: FP-2D
SHEET(S):

HARDWARE SCHEDULE

	ITEM	PART NO.	MANUF.	FINISH / COLOR
1	METAL WIRE PULL 4" CTC	MC402-4-A	EPCO	SATIN CLR. ANODIZED
2	BLUM HINGE PLATE	B173L810	BLUM	NICKLE PLATED
3	BLUM HINGE (INSERTA)	73T5590 F.O., S.C. , 120	BLUM	NICKLE PLATED
4	METAL SHELF SUPPORT	282.04.711	HAFELE	NICKLE PLATED
5	DRAWER SLIDES	AC7432-20	ACCURIDE	ZINC
6				
7				
8				
9				
10				

FINISH SCHEDULE

1

PL 1 - PLASTIC LAMINATE - (CABINETS)
WILSONART 10745 FONTHILL PEAR MATTE

SSM 4 - SOLID SURFACE - (TOPS)
AVONITE KOKOURA F19117

SEE SHEET B-1 FOR CABINET BACKING DETAILS

WHITE MELAMINE INTERIORS U.N.O.

MCCARTHY APPROVAL

A. Approved as noted for Architectural Review ☐
B. Review and Resubmit ☐
C. Rejected ☐

This review is for general conformance with Plans and Specifications only. Any deviations from same not clearly noted by the Preparer have not been reviewed. Review shall not constitute a complete check of detailed dimensions or count to serve to relieve the Preparer of contractual responsibility for any error or deviation from contract requirements.

McCarthy

By _____ Date _____

SHOP DRAWING REFERENCE NO. _____

OMIT

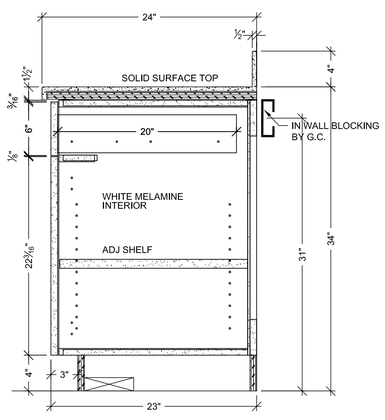

A VERTICAL SECTION
SCALE: 1 1/2" = 1'- 0"
ARCH. REF: A9.0

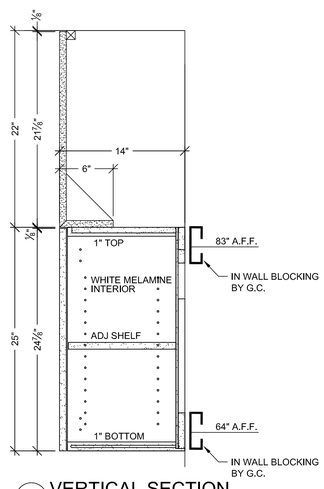

B VERTICAL SECTION
SCALE: 1 1/2" = 1'- 0"
ARCH. REF: A9.0

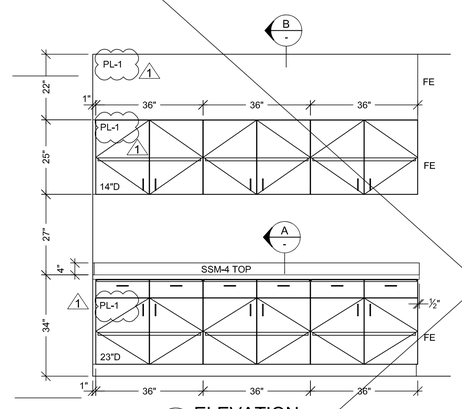

4 ELEVATION
SCALE: 1/2" = 1'- 0" ITEM: 2-114
ROOM: 2.011
ARCH. REF: A9.0

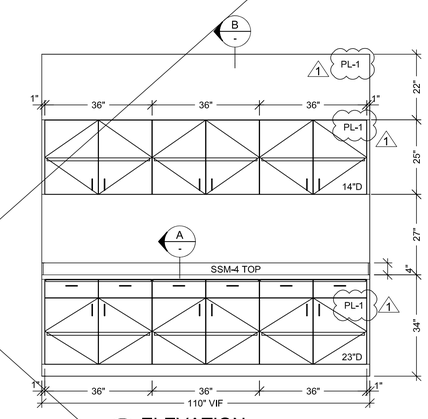

2 ELEVATION
SCALE: 1/2" = 1'- 0" ITEM: 2-115
ROOM: 2.011
ARCH. REF: A9.0

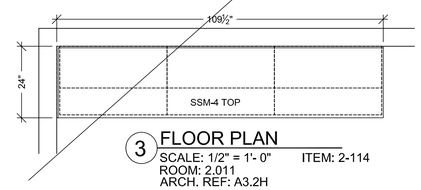

3 FLOOR PLAN
SCALE: 1/2" = 1'- 0" ITEM: 2-114
ROOM: 2.011
ARCH. REF: A3.2H
CONFERENCE ROOM

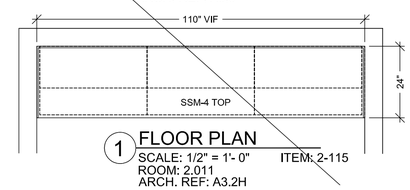

1 FLOOR PLAN
SCALE: 1/2" = 1'- 0" ITEM: 2-115
ROOM: 2.011
ARCH. REF: A3.2H
CONFERENCE ROOM

RELEASE FOR PRODUCTION

SIGNATURE: _____

DATE: _____

NOTE: NO CHANGES CAN BE MADE AFTER AUTHORIZATION TO PROCEED.

DATE	NO	REVISION	SUB. #	BY
8-14-10	1	PER RFI # 1482-0 DATED 5-18-10	-	JB
-	2	-	-	
-	3	-	-	
-	4	-	-	
-	5	-	-	
-	6	-	-	

PROJECT :
CHOC HOSPITAL
TOWER II
455 S. MAIN STREET
ORANGE, CALIFORNIA 92868

FLOOR : LEVEL 2
ROOM # : 2.011
ITEM : TOPS & CABINETS
REF : A9.0, A3.2H
ITEM #: 2-114,2-115

CONTRACTOR :
McCARTHY

ARCHITECT :
FKP

COPYRIGHT
ALL IDEAS DESIGNS, ARRANGEMENTS AND PLANS INDICATED OR REPRESENTED BY THIS DRAWING ARE THE PROPERTY OF PACIFICA MILLWORK. THEY WERE CREATED, EVOLVED AND DEVELOPED FOR USE ON, AND IN CONNECTION WITH THE SPECIFIED PROJECT. NONE OF SUCH IDEAS, DESIGNS, ARRANGEMENT OF PLANS SHALL BE USED BY OR DISCLOSED TO ANY PERSON, FIRM OR CORPORATION FOR ANY PURPOSE WHATSOEVER WITHOUT THE WRITTEN PERMISSION OF P.A.M.

FIELD VERIFICATION

P.A.M. SHOP DRAWINGS ARE MADE FOR THE EXCLUSIVE USE OF P.A.M. AND ANY OTHER TRADES USING THESE DRAWINGS USE THEM AT THEIR OWN RISK. DIMENSIONS ARE TAKEN FROM FIELD WORK WHERE INDICATED. FIELD CONDITIONS MAY REQUIRE CHANGES IN DIMENSIONS, SO OTHER TRADES USING THESE DRAWINGS MUST TAKE THEIR OWN FIELD DIMENSIONS.

PACIFICA
ARCHITECTURAL MILLWORK
704 E. LESLIE ST. LA HABRA, CA. 90631
PH: (714) 525-4059 FAX: (714) 525-4873

DATE: 05-10-10
DRAWN BY: JB
SCALE: NOTED
JOB: 3635
SUBMITTAL: 06
DWG: 2-1

HARDWARE SCHEDULE

	ITEM	PART NO.	MANUF.	FINISH / COLOR
1	METAL WIRE PULL 4" CTC	MC402-4-A	EPCO	SATIN CLR. ANODIZED
2	BLUM HINGE PLATE	B173L810	BLUM	NICKLE PLATED
3	BLUM HINGE (INSERTA)	73T5590 F.O., S.C. , 120	BLUM	NICKLE PLATED
4	METAL SHELF SUPPORT	282.04.711	HAFELE	NICKLE PLATED
5	DRAWER SLIDES	AC7432-20	ACCURIDE	ZINC
6				
7				
8				
9				
10				

FINISH SCHEDULE

2 PL 1 - PLASTIC LAMINATE - (CABINETS)
WILSONART 10745-60 FONTHILL PEAR MATTE

SSM 4 - SOLID SURFACE - (TOPS)
AVONITE KOKOURA F19117

PLEASE VERIFY THESE FINISHES.

SEE SHEET B-1 FOR CABINET BACKING DETAILS

WHITE MELAMINE INTERIORS U.N.O.

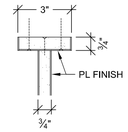

E PLAN SECTION
SCALE: 3" = 1'- 0"
ARCH. REF: A9.0

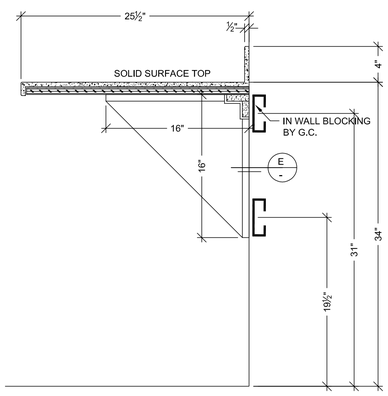

4 C VERTICAL SECTION
SCALE: 1 1/2" = 1'- 0"
ARCH. REF: A9.0

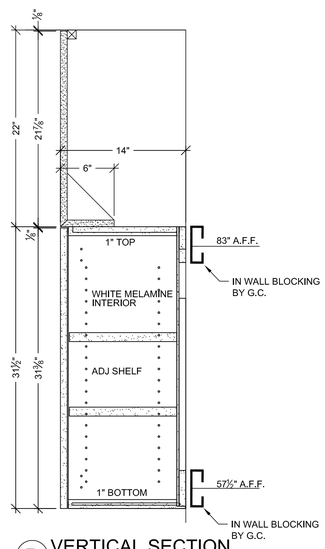

D VERTICAL SECTION
SCALE: 1 1/2" = 1'- 0"
ARCH. REF: A9.0

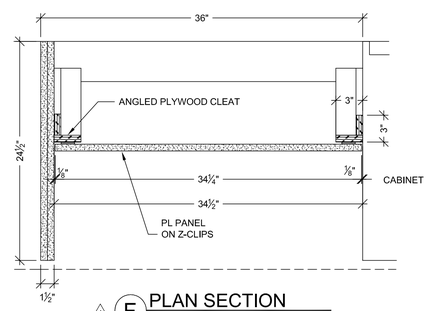

4 F PLAN SECTION
SCALE: 1 1/2" = 1'- 0"

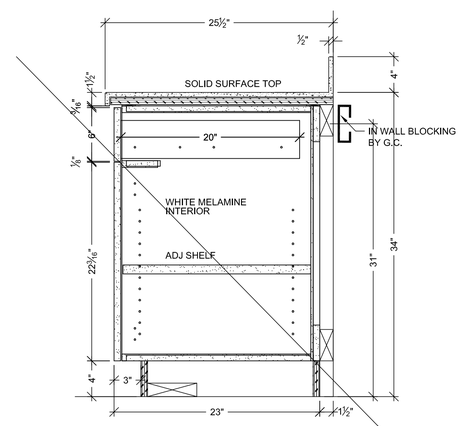

4 G VERTICAL SECTION
SCALE: 1 1/2" = 1'- 0"
ARCH. REF: A9.0

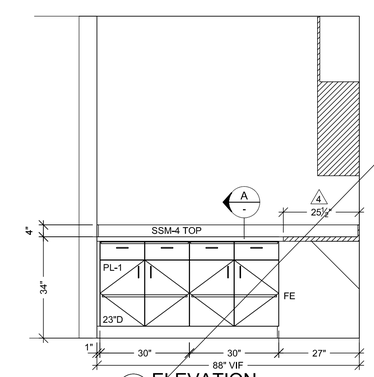

3 ELEVATION
SCALE: 1/2" = 1'- 0" ITEM: 2-121
ROOM: 2.035
ARCH. REF: A9.0

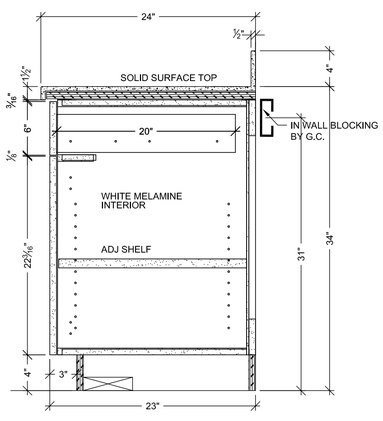

A VERTICAL SECTION
SCALE: 1 1/2" = 1'- 0"
ARCH. REF: A9.0

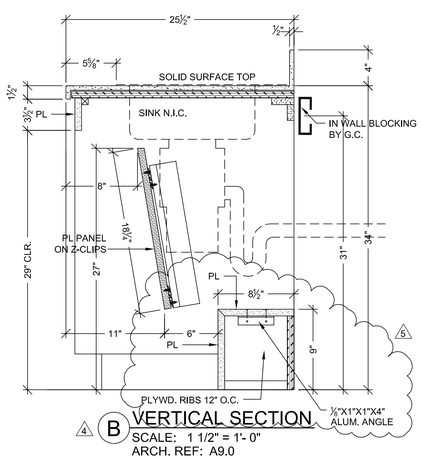

4 B VERTICAL SECTION
SCALE: 1 1/2" = 1'- 0"
ARCH. REF: A9.0

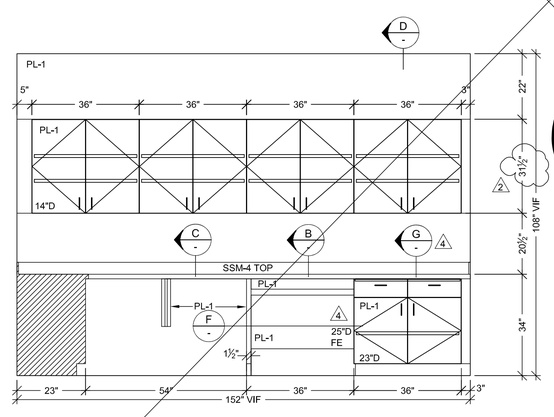

2 ELEVATION
SCALE: 1/2" = 1'- 0" ITEM: 2-121
ROOM: 2.035
ARCH. REF: A9.0

OMIT

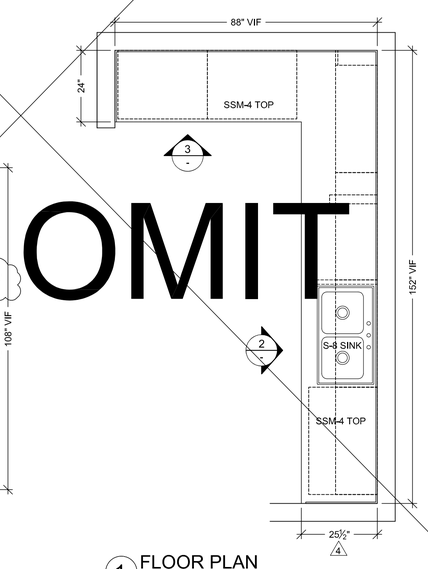

1 FLOOR PLAN
SCALE: 1/2" = 1'- 0" ITEM: 2-121
ROOM: 2.035
ARCH. REF: A3.2J
RESIDENTS LOUNGE

MCCARTHY APPROVAL

A. Approved as noted for Architectural Review ☐
B. Review and Resubmit ☐
C. Rejected ☐

This review is for general conformance with Plans and Specifications only. Any deviations from same not clearly noted by the Preparer have not been reviewed. Review shall not constitute a complete check of detailed dimensions or count to serve to relieve the Preparer of contractual responsibility for any error or deviation from contract requirements.

McCarthy

By _____ Date _____

SHOP DRAWING REFERENCE NO. _____

DATE	NO	REVISION	SUB. #	BY
–	X	X	–	X
10-06-10	1	PER R.L.C. DATED 9-14-10	–	JB
–	2		–	
1-5-11	3	PER ASI #48 DATED 12-1-10	–	JB
1-19-11	4	PER RFI #2768-0 DATED 1-11-11	–	JB
–	5		–	
–	6		–	

PROJECT :
CHOC HOSPITAL
TOWER II
455 S. MAIN STREET
ORANGE, CALIFORNIA 92868

FLOOR : LEVEL 2
ROOM #: 2.035
ITEM : TOPS & CABINETS
REF : A9.0, A3.2J
ITEM #: 2-121

CONTRACTOR :
McCARTHY

ARCHITECT :
FKP

COPYRIGHT
ALL IDEAS DESIGNS, ARRANGEMENTS AND PLANS INDICATED OR REPRESENTED BY THIS DRAWING ARE OWNED BY, AND THE PROPERTY OF P.A.M. AND WERE CREATED,EVOLVED AND DEVELOPED FOR USE ON, AND IN CONNECTION WITH THE SPECIFIED PROJECT. NONE OF SUCH IDEAS, DESIGNS, ARRANGEMENT OF PLANS SHALL BE USED BY OR DISCLOSED TO ANY PERSON, FIRM OR CORPORATION FOR ANY PURPOSE WHATSOEVER WITHOUT THE WRITTEN PERMISSION OF P.A.M.

FIELD VERIFICATION
P.A.M. SHOP DRAWINGS ARE MADE FOR THE EXCLUSIVE USE OF P.A.M. AND ANY OTHER TRADES USING THESE DRAWING USE THEM AT THERE OWN RISK. DIMENSIONS ON THESE DRAWINGS MAY NOT BE ALWAYS NOTED. FIELD CONDITIONS MAY REQUIRE CHANGES IN DIMENSIONS, SO OTHER TRADES USING THESE DRAWINGS MUST TAKE THEIR OWN FIELD DIMENSIONS.

PACIFIC
ARCHITECTURAL MILLWORK
104 LESLIE ST LA HABRA, CA. 90631
PH: (714) 525-2069 FAX: (714) 525-2973

DATE: 05-10-10
DRAWN BY: JB
SCALE: NOTED
JOB: 3635
SUBMITTAL: 06
DWG: 2-2

RELEASE FOR PRODUCTION
SIGNATURE: _____
DATE: _____
NOTE: NO CHANGES CAN BE MADE AFTER AUTHORIZATION TO PROCEED.

FINISH SCHEDULE

2 PL 1 - PLASTIC LAMINATE - (CABINETS)
WILSONART 10745-60 FONTHILL PEAR MATTE

2 PL 3 - PLASTIC LAMINATE - (TOPS)
FORMICA 300-58 SAIL WHITE OXIDE MATTE

PLEASE VERIFY THESE FINISHES.

SEE SHEET B-1 FOR CABINET BACKING DETAILS

WHITE MELAMINE INTERIORS U.N.O.

MCCARTHY APPROVAL

A. Approved as noted for Architectural Review ☐
B. Review and Resubmit ☐
C. Rejected ☐

This review is for general conformance with Plans and Specifications only. Any deviations from same not clearly noted by the Preparer have not been reviewed. Review shall not constitute a complete check of detailed dimensions or count to serve to relieve the Preparer of contractual responsibility for any error or deviation from contract requirements.

McCarthy

By _____ Date _____

SHOP DRAWING REFERENCE NO. _____

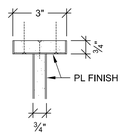

B PLAN SECTION
SCALE: 3" = 1'- 0"
ARCH. REF: A9.0

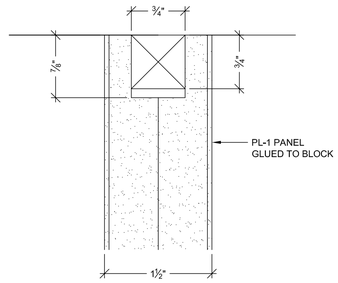

2 C DETAIL
SCALE: FULL SIZE

OMIT

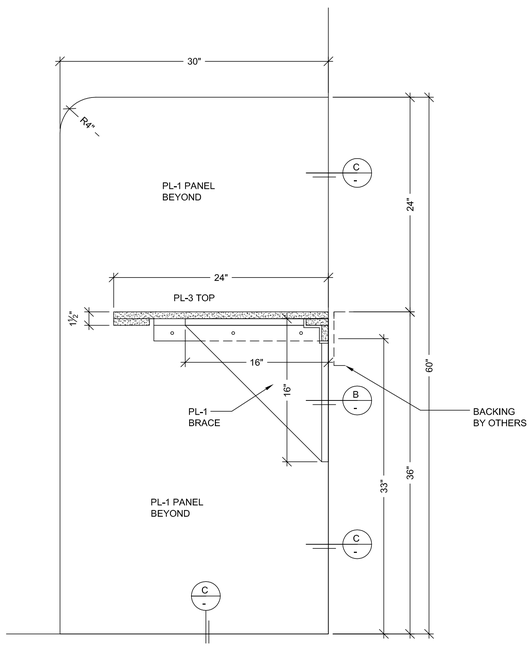

A VERTICAL SECTION
SCALE: 1 1/2" = 1'- 0"
ARCH. REF: A9.0

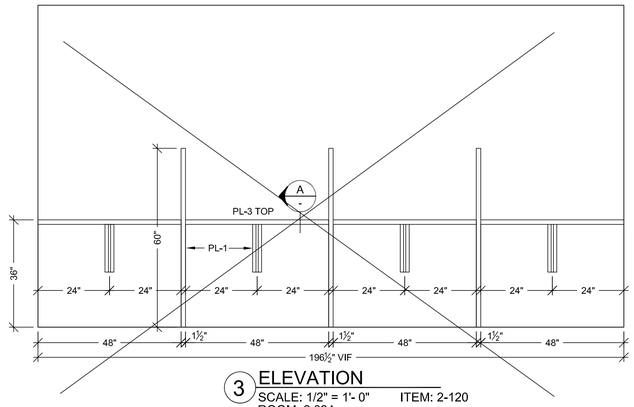

3 ELEVATION
SCALE: 1/2" = 1'- 0" ITEM: 2-120
ROOM: 2.034
ARCH. REF: A9.0

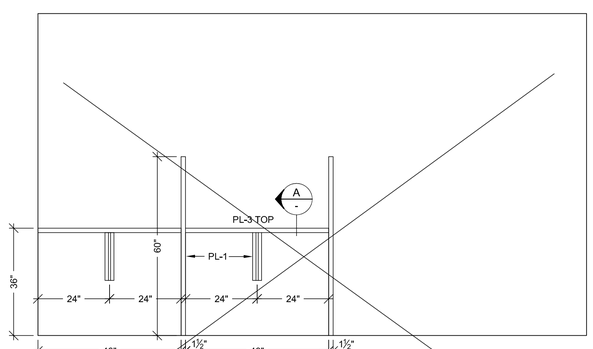

2 ELEVATION
SCALE: 1/2" = 1'- 0" ITEM: 2-120
ROOM: 2.034
ARCH. REF: A9.0

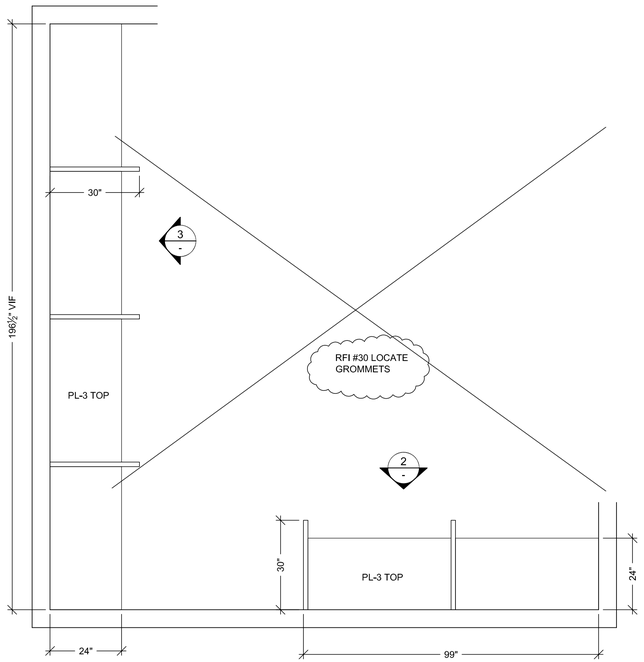

1 FLOOR PLAN
SCALE: 1/2" = 1'- 0" ITEM: 2-120
ROOM: 2.034
ARCH. REF: A3.2J
OFFICE RESIDENTS WRKSTNS.

RELEASE FOR PRODUCTION
SIGNATURE: _____
DATE: _____
NOTE: NO CHANGES CAN BE MADE AFTER AUTHORIZATION TO PROCEED.

DATE	NO	REVISION	SUB. #	BY
–	–	X	–	X
10-06-10	1	PER R.L.C. DATED 9-14-10	–	JB
–	2		–	
–	3		–	
–	4		–	
–	5		–	
–	6		–	

PROJECT :
CHOC HOSPITAL
TOWER II
455 S. MAIN STREET
ORANGE, CALIFORNIA 92868

FLOOR : LEVEL 2
ROOM #: 2.034
ITEM : TOPS & END PANELS
ITEM #: 2-120
REF : A9.0 A3.2J

ARCHITECT :
FKP

CONTRACTOR :
McCARTHY

COPYRIGHT
ALL IDEAS DESIGNS, ARRANGEMENTS AND PLANS INDICATED OR REPRESENTED BY THIS DRAWING ARE OWNED BY, AND THE PROPERTY OF P.A.M. AND WERE CREATED,EVOLVED AND DEVELOPED FOR USE ON, AND IN CONNECTION WITH THE SPECIFIED PROJECT. NONE OF SUCH IDEAS,DESIGNS,ARRANGEMENTS AND PLANS SHALL BE USED BY OR DISCLOSED TO ANY PERSON, FIRM OR CORPORATION FOR ANY PURPOSE WHATSOEVER WITHOUT THE WRITTEN PERMISSION OF P.A.M.

FIELD VERIFICATION
P.A.M. SHOP DRAWINGS ARE MADE FOR THE EXCLUSIVE USE OF P.A.M. AND ANY OTHER TRADES USING THESE DRAWING USE THEM AT THERE OWN RISK. DIMENSIONS ON THESE DRAWINGS MAY NOT BE ALWAYS NOTED, THEREFORE THE CONTRACTOR MUST VERIFY DIMENSIONS,SO OTHER TRADES USING THESE DRAWINGS MUST TAKE THIER OWN FIELD DIMENSIONS.

PACIFIC ARCHITECTURAL MILLWORK
041 LESLIE ST. LA HABRA, CA. 90631
PH: (714) 525-2099 FAX: (714) 525-2073

DATE: 05-10-10	
DRAWN BY: JB	SCALE: NOTED
JOB: 3635	SUBMITTAL: 06
DWG: 2-3	

HARDWARE SCHEDULE

	ITEM	PART NO.	MANUF.	FINISH / COLOR
1	METAL WIRE PULL 4" CTC	MC402-4-A	EPCO	SATIN CLR. ANODIZED
2	BLUM HINGE PLATE	B173L810	BLUM	NICKLE PLATED
3	BLUM HINGE (INSERTA)	73T5590 F.O., S.C. , 120	BLUM	NICKLE PLATED
4	METAL SHELF SUPPORT	282.04.711	HAFELE	NICKLE PLATED
5	DRAWER SLIDES	AC7432-20	ACCURIDE	ZINC
6				
7				
8				
9				
10				

FINISH SCHEDULE

2 PL 3 - PLASTIC LAMINATE - (TOPS)
FORMICA 300-58 SAIL WHITE OXIDE MATTE

2 PL 1 - PLASTIC LAMINATE - (CABINETS)
WILSONART 10745-60 FONTHILL PEAR MATTE

SEE SHEET B-1 FOR CABINET BACKING DETAILS

WHITE MELAMINE INTERIORS U.N.O.

MCCARTHY APPROVAL

A. Approved as noted for Architectural Review ☐
B. Review and Resubmit ☐
C. Rejected ☐

This review is for general conformance with Plans and Specifications only. Any deviations from same not clearly noted by the Preparer have not been reviewed. Review shall not constitute a complete check of detailed dimensions or count to serve to relieve the Preparer of contractual responsibility for any error or deviation from contract requirements.

McCarthy

By _____ Date _____

SHOP DRAWING REFERENCE NO. _____

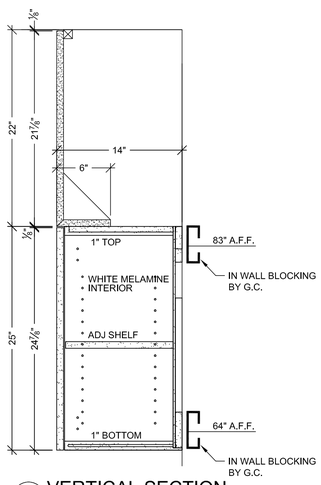

C VERTICAL SECTION
SCALE: 1 1/2" = 1'- 0"
ARCH. REF: A9.0

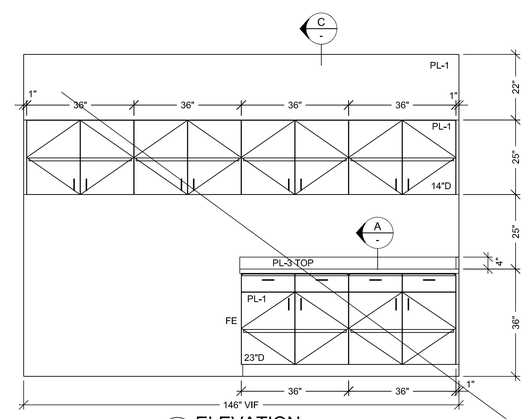

4 ELEVATION
SCALE: 1/2" = 1'- 0" ITEM: 2-100
ROOM: 2.030
ARCH. REF: A9.0

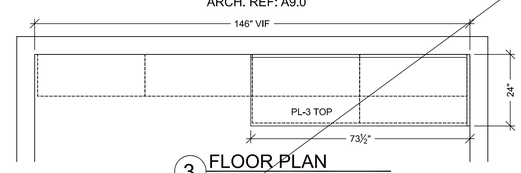

3 FLOOR PLAN
SCALE: 1/2" = 1'- 0" ITEM: 2-100
ROOM: 2.030
ARCH. REF: A3.2D
OPEN WORK CLINICAL DIETICIANS

OMIT

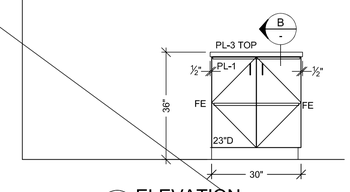

2 ELEVATION
SCALE: 1/2" = 1'- 0" ITEM: 2-119
ROOM: 2.032
ARCH. REF: A9.0

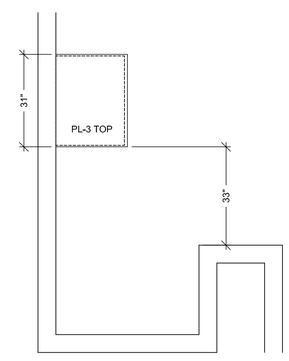

1 FLOOR PLAN
SCALE: 1/2" = 1'- 0" ITEM: 2-119
ROOM: 2.032
ARCH. REF: A3.2J
OFFICE CHIEF RESIDENTS WORKSTATIONS

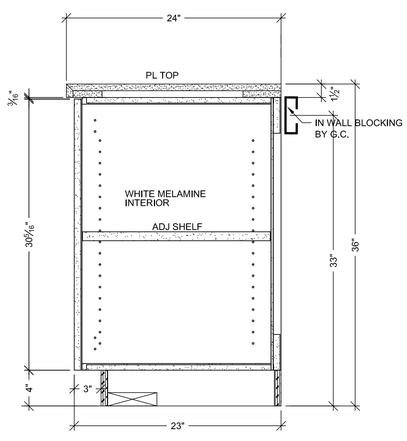

B VERTICAL SECTION
SCALE: 1 1/2" = 1'- 0"
ARCH. REF: A9.0

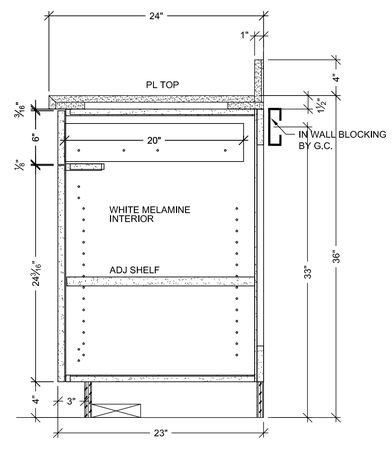

A VERTICAL SECTION
SCALE: 1 1/2" = 1'- 0"
ARCH. REF: A9.0

DATE	NO	REVISION	DSB. #	BY
–	1	X	–	X
10-06-10	2	PER R.L.C. DATED 9-14-10	–	JB
–	3		–	
–	4		–	
–	5		–	
–	6		–	

PROJECT :
CHOC HOSPITAL
TOWER II
455 S. MAIN STREET
ORANGE, CALIFORNIA 92868

FLOOR : LEVEL 2
ROOM # : 2.030, 2.032
ITEM : TOPS & CABINETS
REF : A9.0, A3.2D, A3.2J
ITEM #: 2-100,2-119

CONTRACTOR :
McCARTHY

ARCHITECT :
FKP

COPYRIGHT
ALL IDEAS DESIGNS, ARRANGEMENTS AND PLANS INDICATED OR REPRESENTED BY THIS DRAWING ARE OWNED BY, AND THE PROPERTY OF P.A.M. AND WERE CREATED,EVOLVED AND DEVELOPED FOR USE ON, AND PERTAIN TO A PROJECT OF P.A.M. AND NONE OF SUCH IDEAS, DESIGNS, ARRANGEMENT OF PLANS SHALL BE USED BY OR DISCLOSED TO ANY PERSON, FIRM OR CORPORATION FOR ANY PURPOSE WHATSOEVER WITHOUT THE WRITTEN PERMISSION OF P.A.M.

FIELD VERIFICATION
P.A.M. SHOP DRAWINGS ARE MADE FOR THE EXCLUSIVE USE OF P.A.M. AND ANY OTHER TRADES USING THESE DRAWING USE THEM AT THERE OWN RISK. DIMENSIONS MUST BE FIELD VERIFIED AND ARE NOT GUARANTEED. FIELD CONDITIONS MAY REQUIRE CHANGES IN DIMENSIONS, SO OTHER TRADES USING THESE DRAWINGS MUST TAKE THEIR OWN FIELD DIMENSIONS.

PACIFIC ARCHITECTURAL MILLWORK
104 LESLIE ST. LA PADRA, CA. 90631
PH: (714) 525-2659 FAX: (714) 525-2673

DATE: 05-10-10
DRAWN BY: JB
SCALE: NOTED
JOB: 3635
SUBMITTAL: 06
DWG: 2-4

RELEASE FOR PRODUCTION
SIGNATURE: _____
DATE: _____
NOTE: NO CHANGES CAN BE MADE AFTER AUTHORIZATION TO PROCEED.

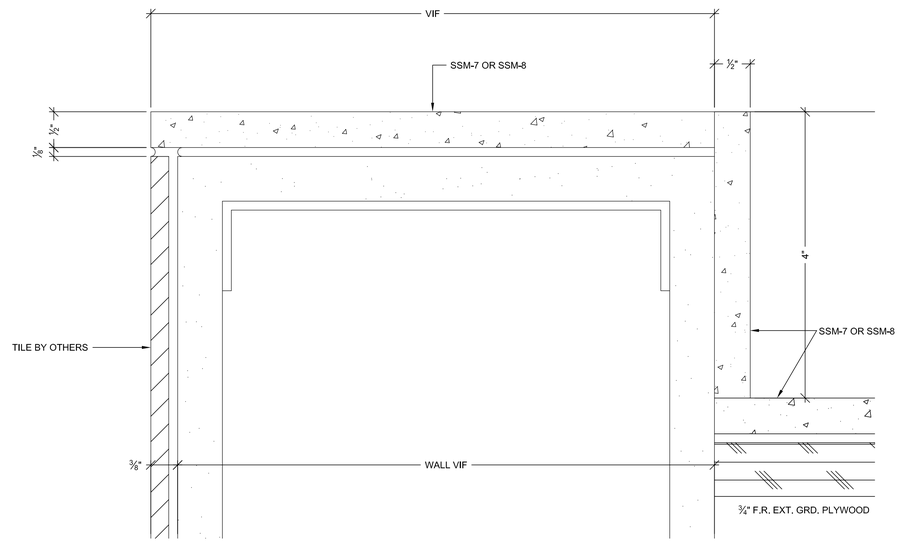

23 C WALL CAP DETAIL
SCALE: FULL SIZE

FINISH SCHEDULE

2 SSM 7 - SOLID SURFACE - (VANITY TOPS)
FORMICA SPA ARTIFACTS #821

2 SSM 8 - SOLID SURFACE - (VANITY TOPS)
FORMICA DEEP BLUE ICE #811

PLEASE VERIFY THESE FINISHES.

SEE SHEET B-1 FOR CABINET BACKING DETAILS

WHITE MELAMINE INTERIORS U.N.O.

MCCARTHY APPROVAL

A. Approved as noted for Architectural Review ☐
B. Review and Resubmit ☐
C. Rejected ☐

This review is for general conformance with Plans and Specifications only. Any deviations from same not clearly noted by the Preparer have not been reviewed. Review shall not constitute a complete check of detailed dimensions or count to serve to relieve the Preparer of contractual responsibility for any error or deviation from contract requirements.

McCarthy

By _____ Date _____

SHOP DRAWING REFERENCE NO. _____

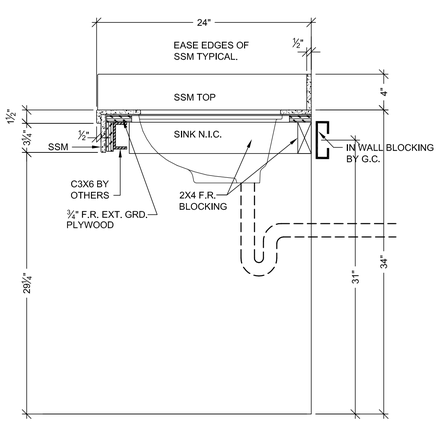

A VERTICAL SECTION
SCALE: 1 1/2" = 1'- 0"
ARCH. REF: A2/A11.7

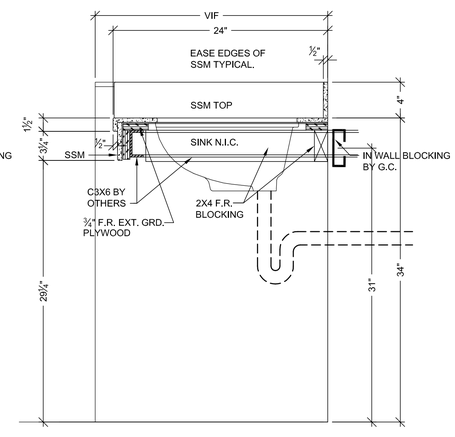

B VERTICAL SECTION
SCALE: 1 1/2" = 1'- 0"
ARCH. REF: A2/A11.7

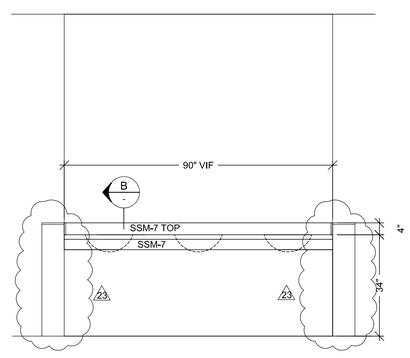

6 ELEVATION
SCALE: 1/2" = 1'- 0" ITEM: 2-132
ROOM: 2.059
ARCH. REF: A2/A11.7

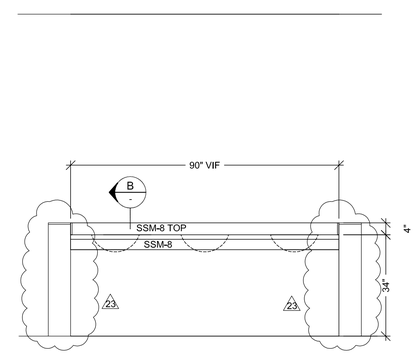

4 ELEVATION
SCALE: 1/2" = 1'- 0" ITEM: 2-131
ROOM: 2.057
ARCH. REF: A2/A11.7

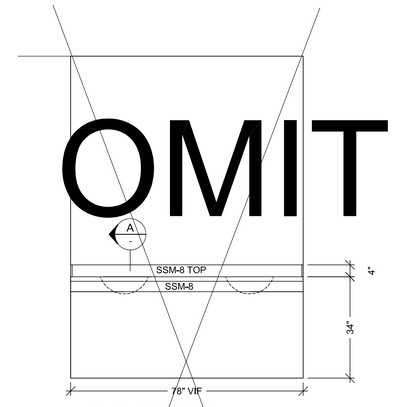

2 ELEVATION
SCALE: 1/2" = 1'- 0" ITEM: 2-117
ROOM: 2.026.03.A
ARCH. REF: A2/A11.7

VESTIBULE LOCKERS

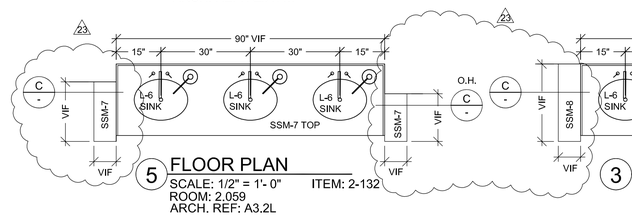

5 FLOOR PLAN
SCALE: 1/2" = 1'- 0" ITEM: 2-132
ROOM: 2.059
ARCH. REF: A3.2L

TOILET PUBLIC FEMALE

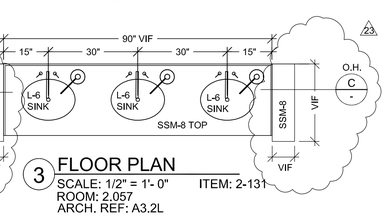

3 FLOOR PLAN
SCALE: 1/2" = 1'- 0" ITEM: 2-131
ROOM: 2.057
ARCH. REF: A3.2L

TOILET PUBLIC MALE

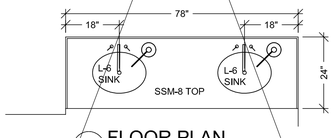

1 FLOOR PLAN
SCALE: 1/2" = 1'- 0" ITEM: 2-117
ROOM: 2.026.03.A
ARCH. REF: A3.2J

VESTIBULE LOCKERS

DATE	NO	REVISION	DSB. #	BY
–	X	X	–	X
10-06-10	1	PER R.L.C. DATED 9-14-10	–	JB
11-17-11	2	PER RFI #46/14-0 DATED 10-11-11	–	JB
–	3	–	–	–
–	4	–	–	–
–	5	–	–	–
–	6	–	–	–

PROJECT :
CHOC HOSPITAL
TOWER II
455 S. MAIN STREET
ORANGE, CALIFORNIA 92868

FLOOR : LEVEL 2
ROOM # : 2.026.03.A,2.057,2.059
ITEM : VANITIES
REF : A9.0, A3.2J, A3.2L, A11.7

ITEM #: 2-117,2-131,2-132

ARCHITECT :
FKP

CONTRACTOR :
McCARTHY

COPYRIGHT
ALL IDEAS DESIGNS, ARRANGEMENTS AND PLANS INDICATED OR REPRESENTED BY THIS DRAWING ARE THE PROPERTY OF PACIFIC MILLWORK. THEY WERE CREATED, EVOLVED AND DEVELOPED FOR USE ON, AND IN CONJECTION WITH THE SPECIFIED PROJECT. NONE OF SUCH IDEAS, DESIGNS, ARRANGEMENT OF PLANS SHALL BE USED BY OR DISCLOSED TO ANY PERSON, FIRM OR CORPORATION FOR ANY PURPOSE WHATSOEVER WITHOUT THE WRITTEN PERMISSION OF P.A.M.

FIELD VERIFICATION

P.A.M. SHOP DRAWINGS ARE MADE FOR THE EXCLUSIVE USE OF P.A.M. AND ANY OTHER TRADES USING THESE DRAWINGS. THAN AT THIS TIME, NEW DIMENSIONS HAVE BEEN ADDED TO THESE DRAWINGS, NOTED. FIELD CONDITIONS MAY REQUIRE CHANGES IN DIMENSIONS, SO OTHER TRADES USING THESE DRAWINGS MUST TAKE THEIR OWN FIELD DIMENSIONS.

PACIFIC
ARCHITECTURAL MILLWORK
704 I LESLIE STA HABERA, CA. 90631
PH: (714) 525-4659 FAX: (714) 525-4673

DATE: 05-10-10
DRAWN BY: JB
SCALE: NOTED
JOB: 3635
SUBMITTAL: 06
DWG: 2-5

RELEASE FOR PRODUCTION
SIGNATURE: _____
DATE: _____
NOTE: NO CHANGES CAN BE MADE AFTER AUTHORIZATION TO PROCEED.

FINISH SCHEDULE

2	PL 3	- PLASTIC LAMINATE - (TOPS) FORMICA 300-58 SAIL WHITE OXIDE MATTE
2	PL 1	- PLASTIC LAMINATE - (CABINETS) WILSONART 10745-60 FONTHILL PEAR MATTE
37	SSM 4	- SOLID SURFACE - (WORK TOP) AVONITE KOKOURA F19117

SEE SHEET B-1 FOR CABINET BACKING DETAILS

WHITE MELAMINE INTERIORS U.N.O.

HARDWARE SCHEDULE

	ITEM	PART NO.	MANUF.	FINISH / COLOR
1	METAL WIRE PULL 4" CTC	MC402-4-A	EPCO	SATIN CLR. ANODIZED
2	BLUM HINGE PLATE	B173L810	BLUM	NICKLE PLATED
3	BLUM HINGE (INSERTA)	73T5590 F.O., S.C. , 120	BLUM	NICKLE PLATED
4	METAL SHELF SUPPORT	282.41.705	HAFELE	NICKLE PLATED
5	DRAWER SLIDES	AC7432-22	ACCURIDE	ZINC
6				
7				
8				
9				
10				

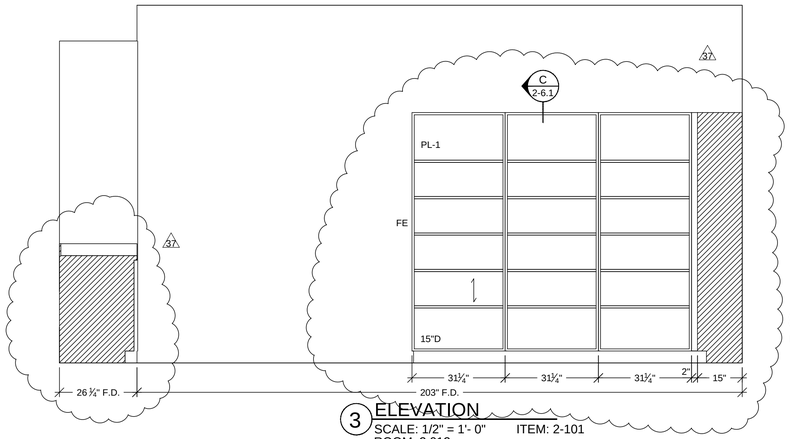

3 ELEVATION
SCALE: 1/2" = 1'- 0" ITEM: 2-101
ROOM: 2.012
ARCH. REF: D5/IA8.7

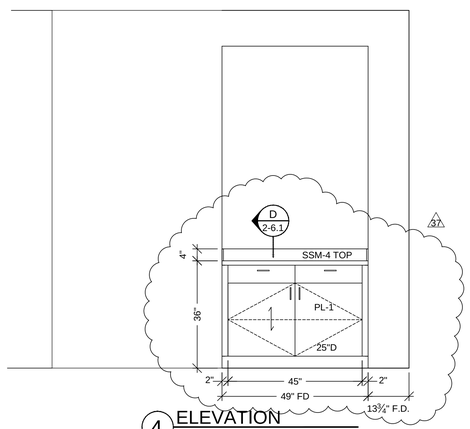

4 ELEVATION
SCALE: 1/2" = 1'- 0" ITEM: 2-101
ROOM: 2.012
ARCH. REF: D3/IA8.7

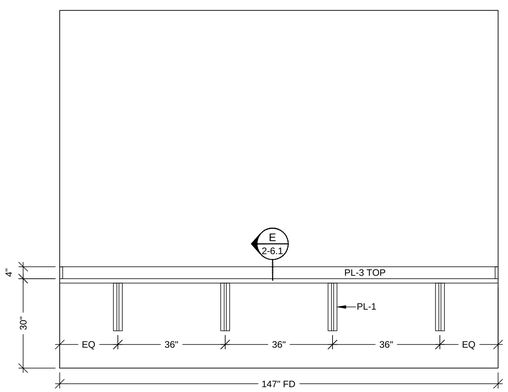

5 ELEVATION
SCALE: 1/2" = 1'- 0" ITEM: 2-104
ROOM: 2.012.00.B
ARCH. REF: A2/IA8.7

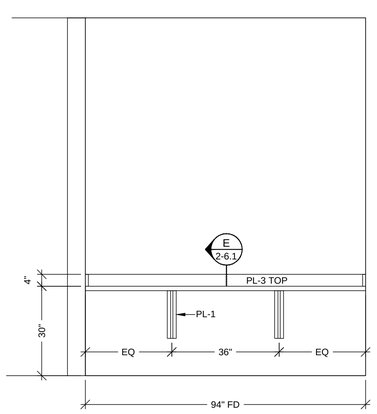

6 ELEVATION
SCALE: 1/2" = 1'- 0" ITEM: 2-104
ROOM: 2.012.00.B
ARCH. REF: B2/IA8.7

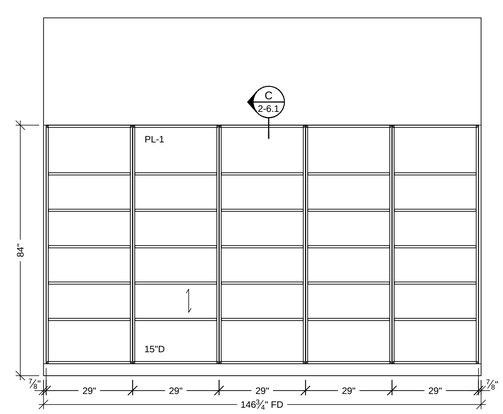

7 ELEVATION
SCALE: 1/2" = 1'- 0" ITEM: 2-103
ROOM: 2.012
ARCH. REF: C2/IA8.7

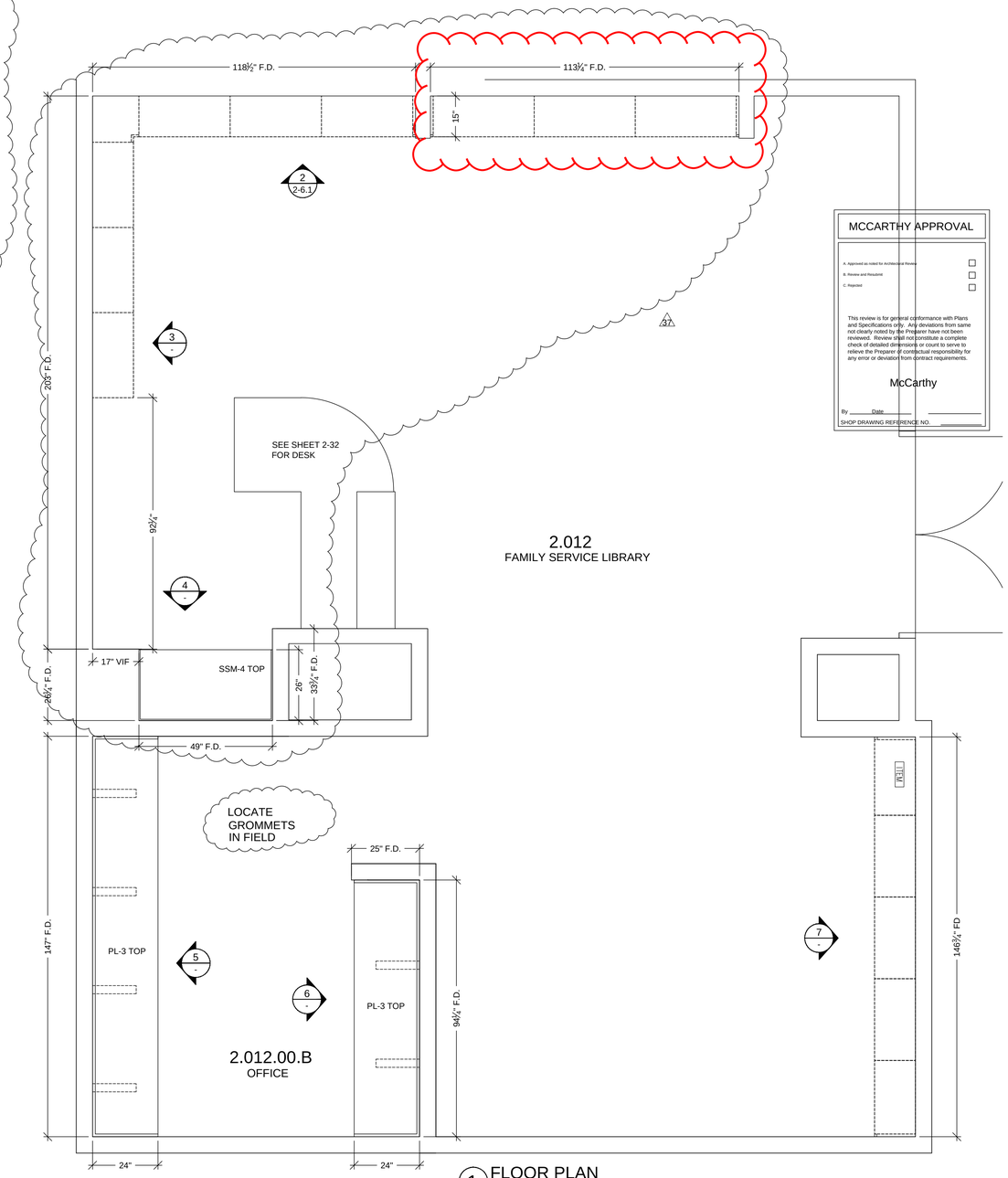

1 FLOOR PLAN
SCALE: 1/2" = 1'- 0" ITEM: 2-101,2-103,2-104
ROOM: 2.012,2.012.00.B
ARCH. REF: IA5.2B
FAMILY SERVICE LIBRARY / OFFICE

MCCARTHY APPROVAL

A. Approved as noted for Architectural Review ☐
B. Review and Resubmit ☐
C. Rejected ☐

This review is for general conformance with Plans and Specifications only. Any deviations from same not clearly noted by the Preparer have not been reviewed. Review shall not constitute a complete check of detailed dimensions or count to serve to relieve the Preparer of contractual responsibility for any error or deviation from contract requirements.

McCarthy

By _____ Date _____

SHOP DRAWING REFERENCE NO. _____

RELEASE FOR PRODUCTION

SIGNATURE: _____

DATE: _____

NOTE: NO CHANGES CAN BE MADE AFTER AUTHORIZATION TO PROCEED.

NO	DATE	REVISION	SUB #	BY
–	–	–	–	DH
–	–	–	–	–
–	–	–	–	–
6	04/05/12	FIELD DIMENTIONS	–	–
5	–	–	–	–
4	–	–	–	–
3	4-26-12	PER R.F.I. 5493-1 DATED 4-11-12	–	JB
2	10-06-10	PER R.L.C. DATED 9-14-10	–	JB
1	–	X	–	X

PROJECT :
CHOC HOSPITAL
TOWER II
455 S. MAIN STREET
ORANGE, CALIFORNIA 92888

FLOOR : LEVEL 2
ROOM # : 2.012
ITEM : TOPS & CABINETS
REF : A9.0, IA5.2B, IA8.7

ITEM # : 2-101,2-103,2-104

CONTRACTOR :
McCARTHY

ARCHITECT :
FKP

COPYRIGHT

ALL IDEAS DESIGNS, ARRANGEMENTS AND PLANS INDICATED OR REPRESENTED BY THIS DRAWING ARE OWNED BY, AND THE PROPERTY OF P.A.M. AND WERE CREATED,EVOLVED AND DEVELOPED FOR USE ON, AND IN CONECTION WITH THE SPECIFIED PROJECT. NONE OF SUCH IDEAS DESIGNS, ARRANGEMENTS AND PLANS SHALL BE USED BY OR DISCLOSED TO ANY PERSON, FIRM OR CORPORATION FOR ANY PURPOSE WHATSOEVER WITHOUT THE WRITTEN PERMISSION OF P.A.M.

FIELD VERIFICATION

P.A.M. SHOP DRAWINGS ARE MADE FOR THE EXCLUSIVE USE OF P.A.M. AND ANY OTHER TRADES USING THESE DRAWING USE THEM AT THERE OWN RISK. DIMENSIONS ON THESE DRAWINGS MAY NOT BE ALWAYS NOTED, FIELD CONDITIONS MAY REQUIRE CHANGES IN DIMENSIONS, SO OTHER TRADES USING THESE DRAWINGS MUST TAKE THIER OWN FIELD DIMENSIONS.

PACIFIC ARCHITECTURAL MILLWORK
1041 LESLIE ST. LA HABRA, CA. 90631
PH: (714) 525-2059 FAX: (714) 525-2673

DATE: 05-10-10
DRAWN BY: JB
SCALE: NOTED
JOB: 3635
SUBMITTAL: 06
DWG: 2-6

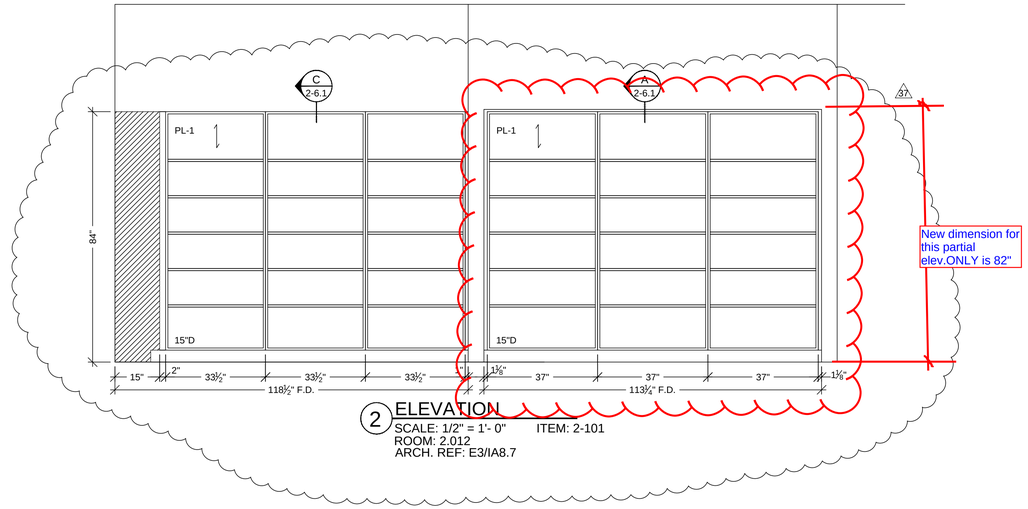

2 ELEVATION
SCALE: 1/2" = 1'- 0" ITEM: 2-101
ROOM: 2.012
ARCH. REF: E3/IA8.7

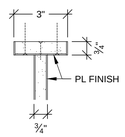

G PLAN SECTION
SCALE: 3" = 1'- 0"
ARCH. REF: A9.0

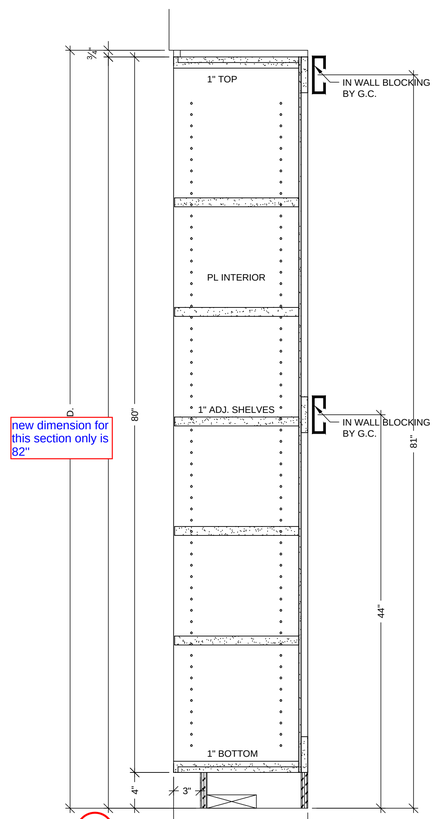

A VERTICAL SECTION
SCALE: 1 1/2" = 1'- 0"
ARCH. REF: B3/IA7.2

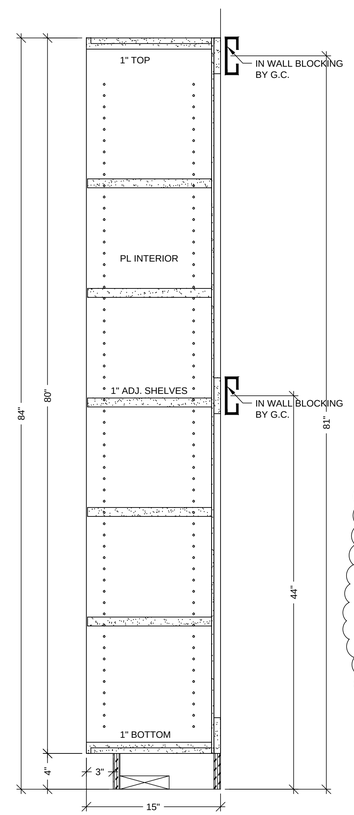

C VERTICAL SECTION
SCALE: 1 1/2" = 1'- 0"
ARCH. REF: B3/IA7.2

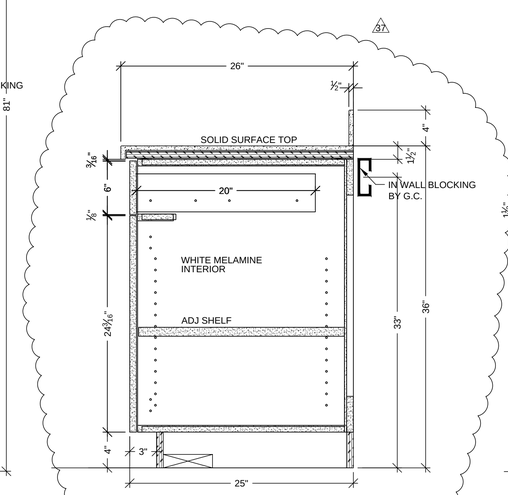

D VERTICAL SECTION
SCALE: 1 1/2" = 1'- 0"
ARCH. REF: A9.0

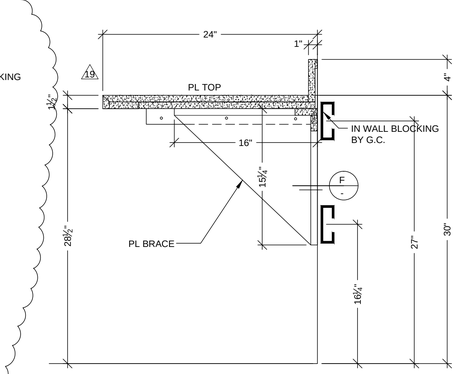

E VERTICAL SECTION
SCALE: 1 1/2" = 1'- 0"
ARCH. REF: C5/IA7.2

MCCARTHY APPROVAL

A. Approved as noted for Architectural Review ☐
B. Review and Resubmit ☐
C. Rejected ☐

This review is for general conformance with Plans and Specifications only. Any deviations from same not clearly noted by the Preparer have not been reviewed. Review shall not constitute a complete check of detailed dimensions or count to serve to relieve the Preparer of contractual responsibility for any error or deviation from contract requirements.

McCarthy

By _____ Date _____
SHOP DRAWING REFERENCE NO. _____

RELEASE FOR PRODUCTION
SIGNATURE: _____
DATE: _____
NOTE: NO CHANGES CAN BE MADE AFTER AUTHORIZATION TO PROCEED.

DATE	NO	REVISION	SUB #	BY
9-1-11	2	OWNER TOP CHANGES DATED 8-23-11	1	JB
4-26-12	3	PER R.F.I. 5493-1 DATED 4-11-12	1	JB
	4		1	
	5		1	
	6		1	

PROJECT : CHOC HOSPITAL TOWER II
455 S. MAIN STREET ORANGE, CALIFORNIA 92868

ITEM # : 2-101,2-103,2-104
FLOOR : LEVEL 2
ROOM # : 2.012, 2.012.00.B
ITEM : TOPS & CABINETS
REF : A9.0, IA5.2B, IA8.7, IA7.2

CONTRACTOR : McCARTHY
ARCHITECT : FKP

COPYRIGHT
ALL IDEAS DESIGNS, ARRANGEMENTS AND PLANS INDICATED OR REPRESENTED BY THIS DRAWING ARE OWNED BY, AND THE PROPERTY OF P.A.M. AND WERE CREATED,EVOLVED AND DEVELOPED FOR USE ON, AND IN CONNECTION WITH THE SPECIFIED PROJECT. NONE OF SUCH IDEAS, DESIGNS, ARRANGEMENTS OR PLANS SHALL BE USED BY OR DISCLOSED TO ANY PERSON, FIRM OR CORPORATION FOR ANY PURPOSE WHATSOEVER WITHOUT THE WRITTEN PERMISSION OF P.A.M.

FIELD VERIFICATION
P.A.M. SHOP DRAWINGS ARE MADE FOR THE EXCLUSIVE USE OF P.A.M. AND ANY OTHER TRADES USING THESE DRAWING USE THEM AT THERE OWN RISK. DIMENSIONS ON THESE DRAWINGS MAY NOT BE ALWAYS NOTED, THERE MAY BE MORE DETAILED AND ACCURATE DIMENSIONS, SO OTHER TRADES USING THESE DRAWINGS MUST TAKE THEIR OWN FIELD DIMENSIONS.

PACIFIC ARCHITECTURAL MILLWORK
1041 LESLIE ST. LA HABRA, CA. 90631
PH: (714) 525-2059 FAX: (714) 525-2673

DATE: 05-10-10
DRAWN BY: JB SCALE: NOTED
JOB: 3635 SUBMITTAL: 06
DWG: 2-6.1

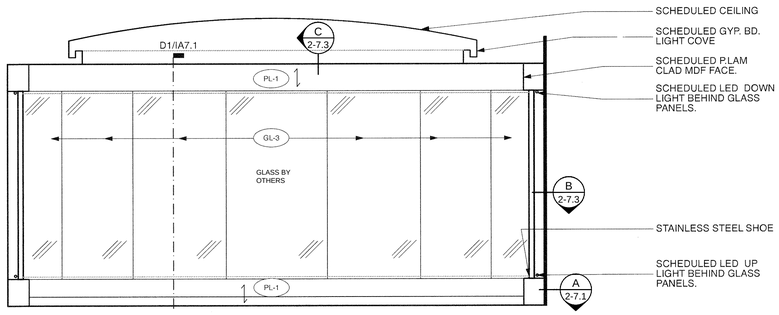

2 ELEVATION
SCALE: 3/8"=1'-0" ITEM: 2-100.1
ROOM: 2.014
ARCH. REF: E5/IA8.5

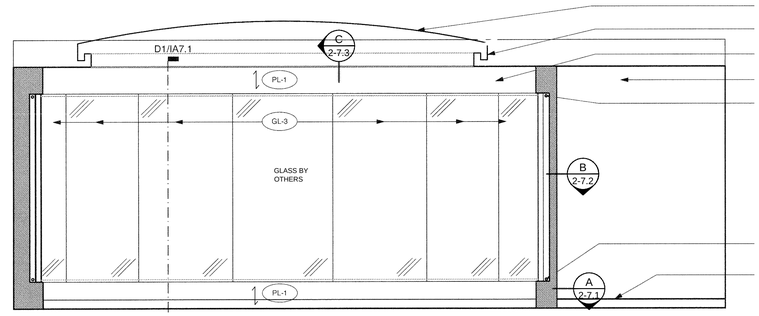

3 ELEVATION
SCALE: 3/8"=1"-0" ITEM: 2-100.1
ROOM: 2.014
ARCH. REF: E3/IA8.5

HARDWARE SCHEDULE

	ITEM	PART NO.	MANUF.	FINISH / COLOR
1	METAL SHELF SUPPORT	282.04.711	HAFELE	NICKLE PLATED
2				
3				
4				
5				
6				
7				
8				
9				
10				

FINISH SCHEDULE

PL 1 - PLASTIC LAMINATE - (TOPS & CABINETS)
WILSONART 10745-60 FONTHILL PEAR MATTE

SSM 4 - SOLID SURFACE TOPS
AVONITE KOKOURA F19117

SEE SHEET B-1 FOR CABINET BACKING DETAILS

WHITE MELAMINE INTERIORS U.N.O.

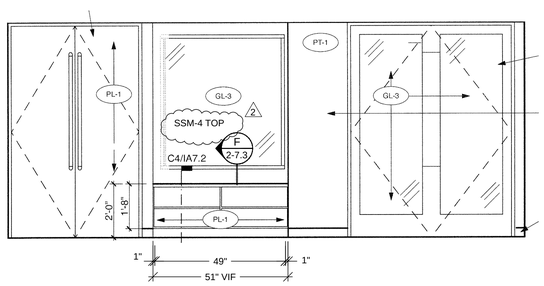

4 ELEVATION
SCALE: 3/8"=1"-0" ITEM: 2-100.2
ROOM: 2.014
ARCH. REF: D5/IA8.5

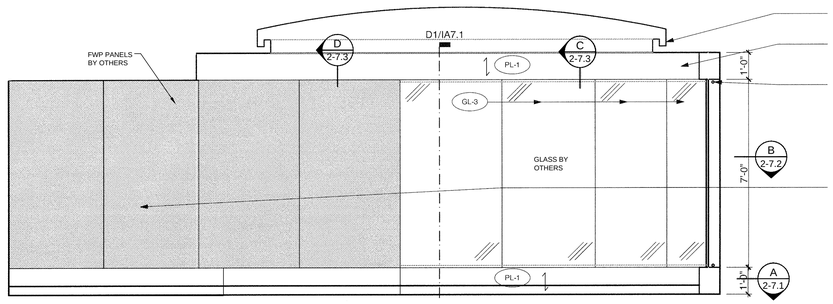

5 ELEVATION
SCALE: 3/8"=1"-0" ITEM: 2-100.1
ROOM: 2.014
ARCH. REF: D3/IA8.5

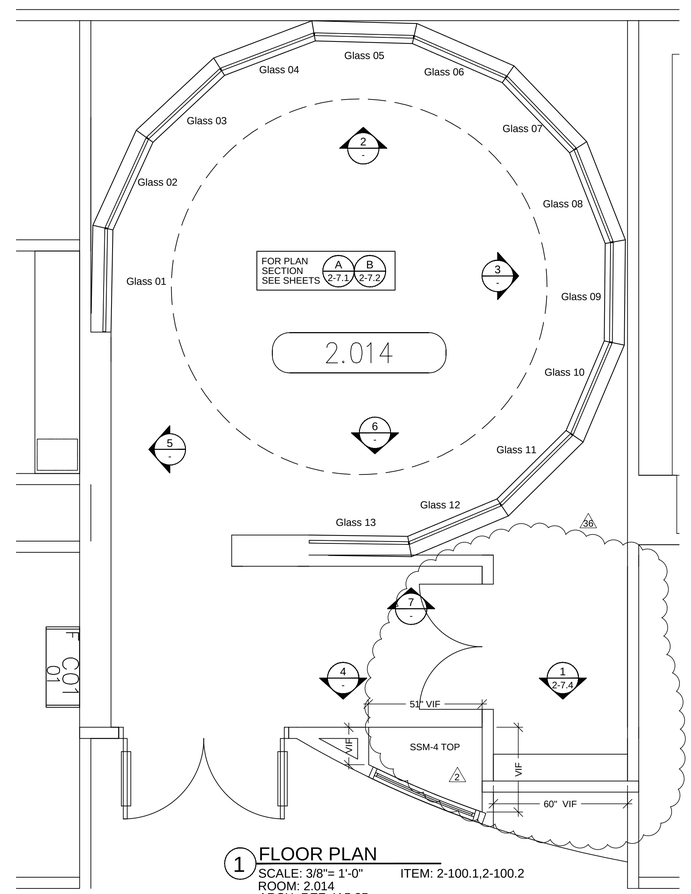

1 FLOOR PLAN
SCALE: 3/8"= 1'-0" ITEM: 2-100.1,2-100.2
ROOM: 2.014
ARCH. REF: IA5.2B

ALL FAITHS MEDITATION ROOM

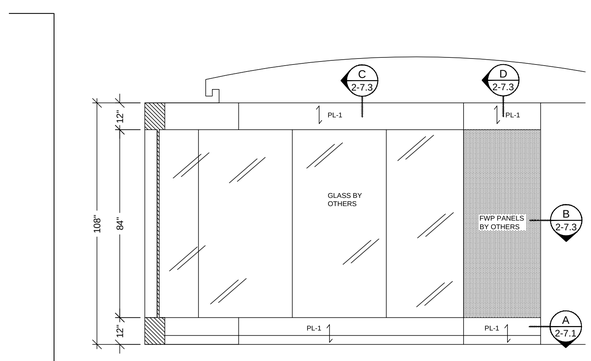

6 ELEVATION
SCALE: 3/8"=1'-0" ITEM: 2-100.1
ROOM: 2.014
ARCH. REF: NONE

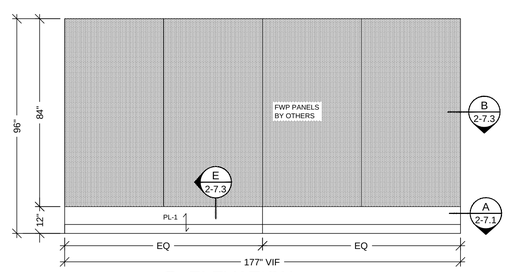

7 ELEVATION
SCALE: 3/8"=1'-0" ITEM: 2-100.1
ROOM: 2.014
ARCH. REF: NONE

MCCARTHY APPROVAL

A. Approved as noted for Architectural Review ☐
B. Review and Resubmit ☐
C. Rejected ☐

This review is for general conformance with Plans and Specifications only. Any deviations from same not clearly noted by the Preparer have not been reviewed. Review shall not constitute a complete check of detailed dimensions or count to serve to relieve the Preparer of contractual responsibility for any error or deviation from contract requirements.

McCarthy

By _____ Date _____

SHOP DRAWING REFERENCE NO. _____

RELEASE FOR PRODUCTION
SIGNATURE: _____
DATE: _____
NOTE: NO CHANGES CAN BE MADE AFTER AUTHORIZATION TO PROCEED.

NO	DATE	REVISION	SUB #	BY
	–	X	–	X
1	10-06-10	PER R.L.C. DATED 9-14-10	–	JB
2			–	
2A	11-21-11	PER SKETCH CHANGES TO RM 2.014 ALL FAITHS MEDITATION RM	–	LK
2B	4-17-12	PER ASI#157 & RFI# 5381-0 MEDITATION RM 2.014, SHEET 2-7	–	LK
2C	4-20-12	PER ASI#184 DATED 3-14-11	–	JB

PROJECT : CHOC HOSPITAL TOWER II
455 S. MAIN STREET
ORANGE, CALIFORNIA 92868

FLOOR : LEVEL 2
ROOM # : 2.014
ITEM : WALL PANELS & CABINETS
REF : IA5.2B,A7.1,A7.2,A8.5
ITEM # : 2-100.1,2-100.2

CONTRACTOR : McCARTHY

ARCHITECT : FKP

COPYRIGHT
ALL IDEAS,DESIGNS, ARRANGEMENTS AND PLANS INDICATED OR REPRESENTED BY THIS DRAWING ARE OWNED BY, AND THE PROPERTY OF P.A.M. AND WERE CREATED,EVOLVED AND DEVELOPED FOR USE ON, AND FOR, THIS PROJECT AND NOT TO BE SHARED WITH NONE OF SUCH IDEAS, DESIGNS, ARRANGEMENT OF PLANS SHALL BE USED BY OR DISCLOSED TO ANY PERSON, FIRM OR CORPORATION FOR ANY PURPOSE WHATSOEVER WITHOUT THE WRITTEN PERMISSION OF P.A.M.

FIELD VERIFICATION
P.A.M. SHOP DRAWINGS ARE MADE FOR THE EXCLUSIVE USE OF P.A.M. AND ANY OTHER TRADES USING THESE DRAWING USE THEM AT THERE OWN RISK. DIMENSIONS ON THESE DRAWINGS MAY NOT BE ALWAYS NOTED, FIELD CONDITIONS MAY REQUIRE CHANGES IN DIMENSIONS NOTED ON THESE DRAWINGS. THESE DRAWINGS MUST TAKE THEIR OWN FIELD DIMENSIONS.

PACIFIC ARCHITECTURAL MILLWORK
1041 LESLIE ST. LA HABRA, CA. 90631
PH: (714) 525-2059 FAX: (714) 525-2673

DATE: 05-10-10
DRAWN BY: JB SCALE: NOTED
JOB: 3635 SUBMITTAL: 06
DWG: 2-7

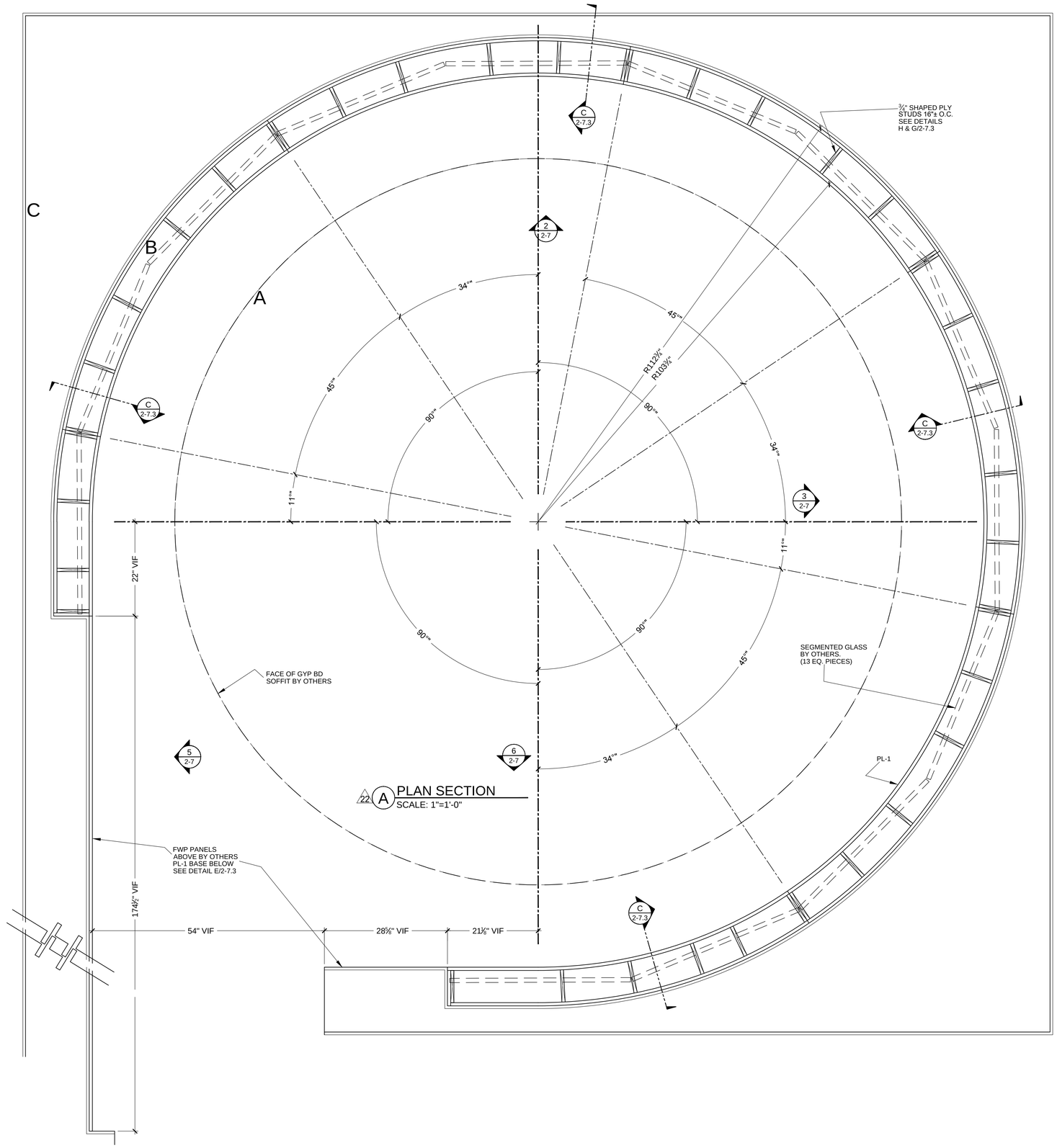

22 A PLAN SECTION
SCALE: 1"=1'-0"

NO	DATE	REVISION	SHEET #	BY
1	-	X	-	X
2	-		-	
2A	11-21-11	PER SKETCH CHANGES TO RM 2.014 ALL FAITHS MEDITATION RM	-	LK
2B	4-17-12	PER ASI#157 & RFI# 5381-0 MEDITATION RM 2.014, SHEET 2-7		LK

PROJECT :
CHOC HOSPITAL
TOWER II
455 S. MAIN STREET
ORANGE, CALIFORNIA 92868

FLOOR : LEVEL 2
ROOM # : 2.014
ITEM : WALL PANELS & CABINETS
REF : IA5.2B,A7.1,A7.2,A8.5
ITEM #: 2-100.1,2-100.2

CONTRACTOR :
McCARTHY

ARCHITECT :
FKP

COPYRIGHT

ALL IDEAS DESIGNS, ARRANGEMENTS AND PLANS INDICATED OR REPRESENTED BY THIS DRAWING ARE OWNED BY, AND THE PROPERTY OF P.A.M. AND WERE CREATED,EVOLVED AND DEVELOPED FOR USE ON, AND IN CONNECTION WITH THE SPECIFIED PROJECT. NONE OF SUCH IDEAS, DESIGNS, ARRANGEMENTS OR PLANS SHALL BE USED BY OR DISCLOSED TO ANY PERSON, FIRM OR CORPORATION FOR ANY PURPOSE WHATSOEVER WITHOUT THE WRITTEN PERMISSION OF P.A.M.

FIELD VERIFICATION

P.A.M. SHOP DRAWINGS ARE MADE FOR THE EXCLUSIVE USE OF P.A.M. AND ANY OTHER TRADES USING THESE DRAWING USE THEM AT THERE OWN RISK. DIMENSIONS ON THESE DRAWINGS MAY NOT BE ALWAYS NOTED, DRAWINGS ARE NOT ALWAYS DRAWN TO EXACT DIMENSIONS, SO OTHER TRADES USING THESE DRAWINGS MUST TAKE THEIR OWN FIELD DIMENSIONS.

PACIFIC ARCHITECTURAL MILLWORK
1041 LESLIE ST. LA HABRA, CA. 90631
PH: (714) 525-2059 FAX: (714) 525-2673

MCCARTHY APPROVAL

A. Approved as noted for Architectural Review ☐
B. Review and Resubmit ☐
C. Rejected ☐

This review is for general conformance with Plans and Specifications only. Any deviations from same not clearly noted by the Preparer have not been reviewed. Review shall not constitute a complete check of detailed dimensions or count to serve to relieve the Preparer of contractual responsibility for any error or deviation from contract requirements.

McCarthy

By _____ Date _____

SHOP DRAWING REFERENCE NO. _____

RELEASE FOR PRODUCTION

SIGNATURE: _____

DATE: _____

NOTE: NO CHANGES CAN BE MADE AFTER AUTHORIZATION TO PROCEED.

DATE: 05-10-10	
DRAWN BY: JB	SCALE: NOTED
JOB: 3635	SUBMITTAL: 06
DWG: 2-7.1	

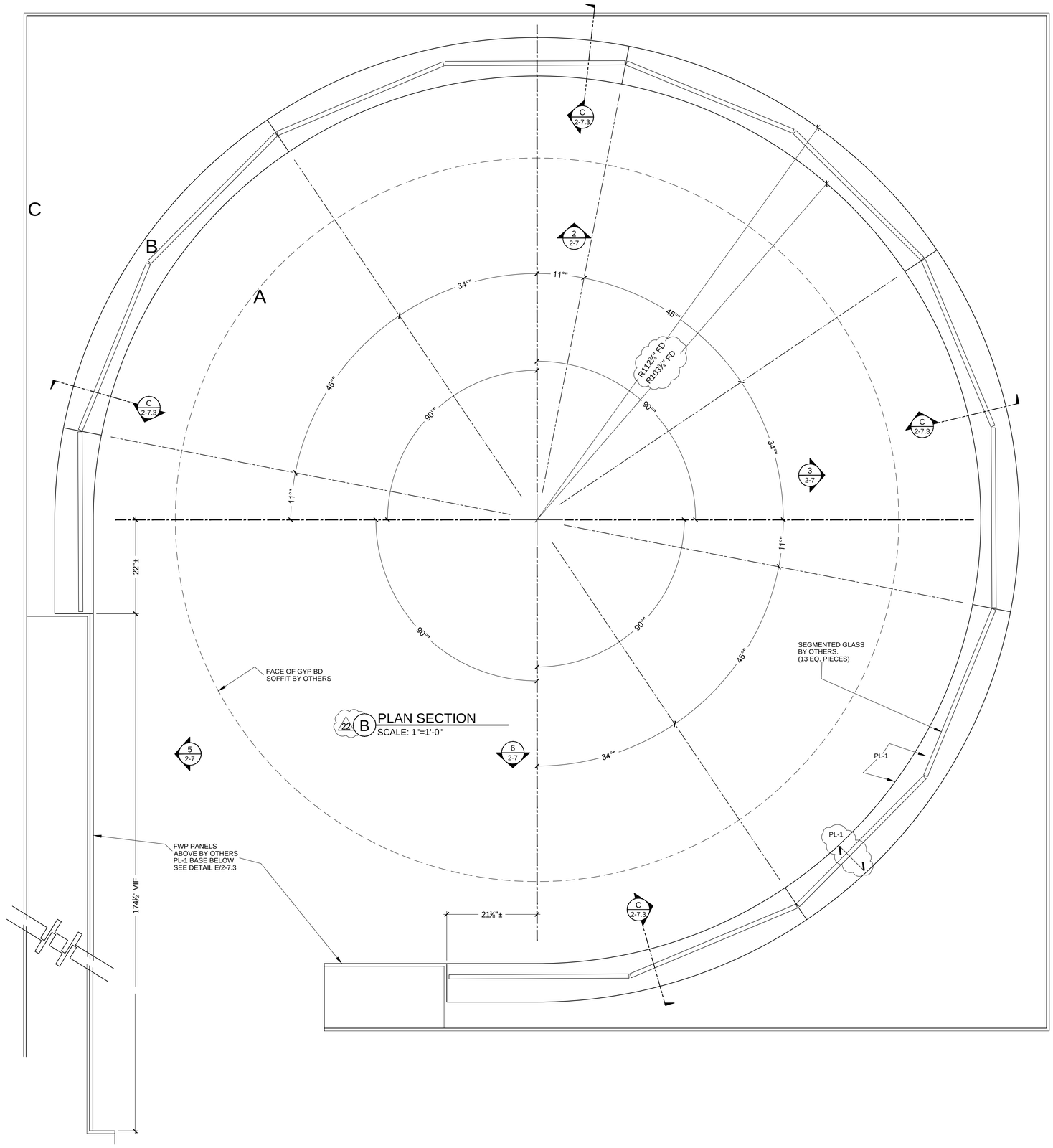

22 B PLAN SECTION
SCALE: 1"=1'-0"

MCCARTHY APPROVAL

A. Approved as noted for Architectural Review ☐
B. Review and Resubmit ☐
C. Rejected ☐

This review is for general conformance with Plans and Specifications only. Any deviations from same not clearly noted by the Preparer have not been reviewed. Review shall not constitute a complete check of detailed dimensions or count to serve to relieve the Preparer of contractual responsibility for any error or deviation from contract requirements.

McCarthy

By _____ Date _____

SHOP DRAWING REFERENCE NO. _____

RELEASE FOR PRODUCTION

SIGNATURE: _____

DATE: _____

NOTE: NO CHANGES CAN BE MADE AFTER AUTHORIZATION TO PROCEED.

DATE	NO	REVISION	SUB #	BY
	X			
	1			
	2			
11-21-11	1	PER SKETCH CHANGES TO RM 2.014 ALL FAITHS MEDITATION RM		LK
4-17-12	2	PER ASI#157 & RFI# 5381-3 MEDITATION RM 2.014, SHEET 2-7		LK

PROJECT :
CHOC HOSPITAL
TOWER II
455 S. MAIN STREET
ORANGE, CALIFORNIA 92868

FLOOR : LEVEL 2
ROOM # : 2.014
ITEM : WALL PANELS & CABINETS
REF : IA5.2B,A7.1,A7.2,A8.5
ITEM #: 2-100.1,2-100.2

ARCHITECT :
FKP

CONTRACTOR :
McCARTHY

COPYRIGHT
ALL IDEAS,DESIGNS, ARRANGEMENTS AND PLANS INDICATED OR REPRESENTED BY THIS DRAWING ARE OWNED BY, AND THE PROPERTY OF P.A.M. AND WERE CREATED,EVOLVED AND DEVELOPED FOR USE ON, AND IN CONECTION WITH THE SPECIFIED PROJECT. NONE OF SUCH IDEAS, DESIGNS, ARRANGEMENT OF PLANS ARE TO BE USED BY ANY OTHER PERSON, PERSON, FIRM OR CORPORATION FOR ANY PURPOSE WHATSOEVER WITHOUT THE WRITTEN PERMISSION OF P.A.M.

FIELD VERIFICATION

P.A.M. SHOP DRAWINGS ARE MADE FOR THE EXCLUSIVE USE OF P.A.M. AND ANY OTHER TRADES USING THESE DRAWING USE THEM AT THERE OWN RISK. DIMENSIONS ON THESE DRAWINGS MAY NOT BE ALWAYS NOTED. FIELD CONDITIONS MAY REQUIRE CHANGES IN DIMENSIONS, SO OTHER TRADES USING THESE DRAWINGS MUST TAKE THEIR OWN FIELD DIMENSIONS.

PACIFIC ARCHITECTURAL MILLWORK
1041 LESLIE ST. LA HABRA, CA. 90631
PH: (714) 525-2059 FAX: (714) 525-2673

DATE: 05-10-10
DRAWN BY: JB
SCALE: NOTED
JOB: 3635
SUBMITTAL: 06
DWG: 2-7.2

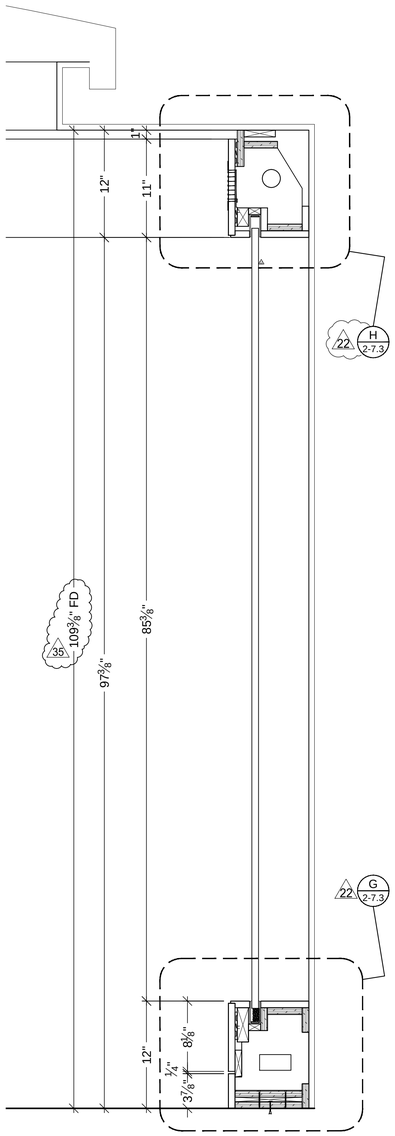

22 C VERTICAL SECTION
SCALE: 1 1/2" = 1'- 0"
ARCH REF: PER SKETCH CHANGE

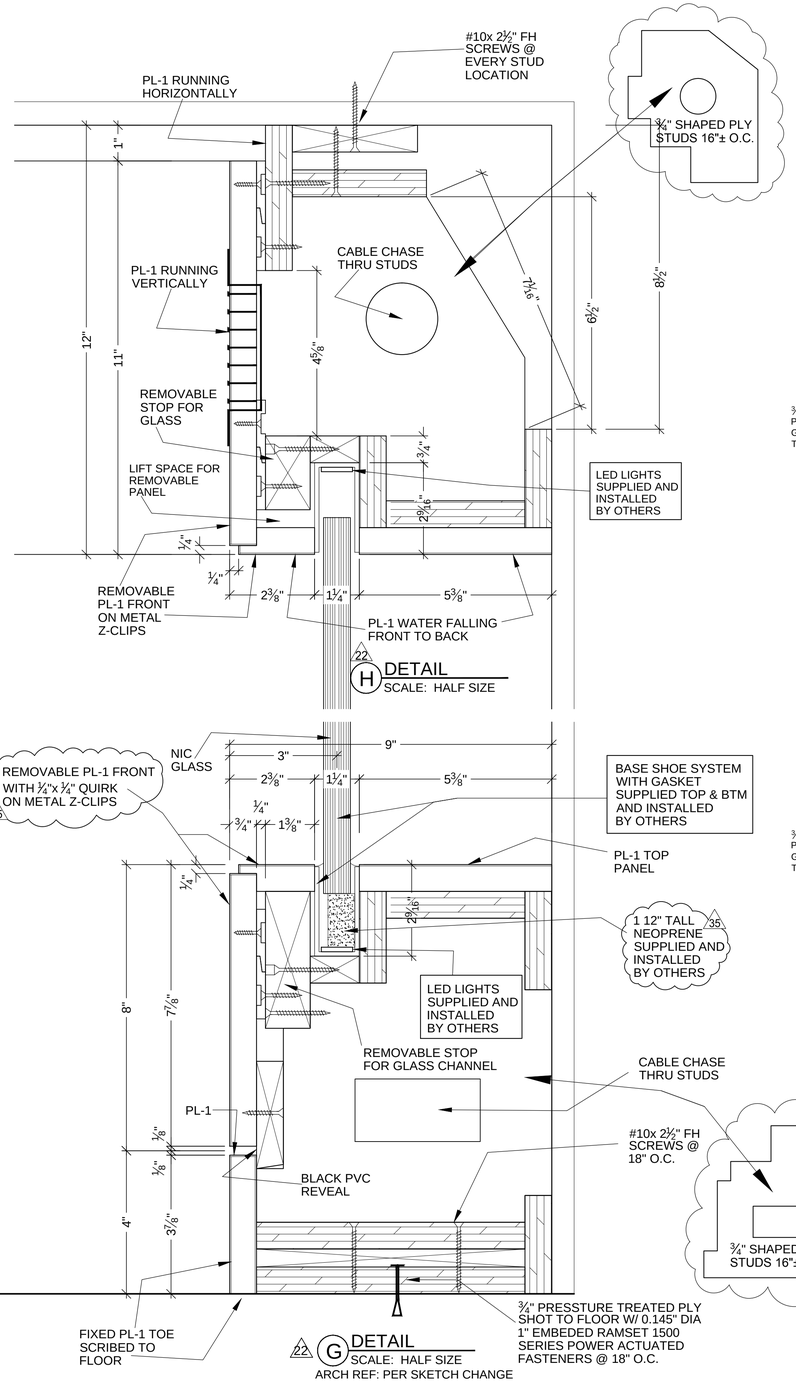

22 G DETAIL
SCALE: HALF SIZE
ARCH REF: PER SKETCH CHANGE

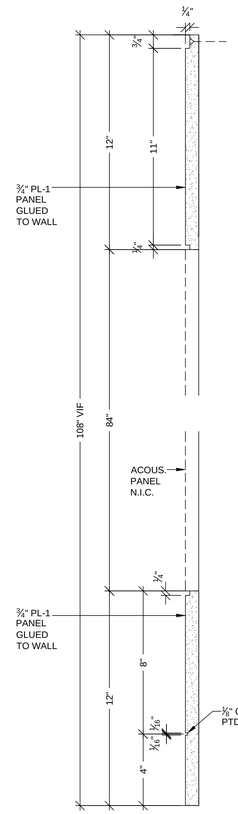

D VERTICAL SECTION
SCALE: 3" = 1'- 0"

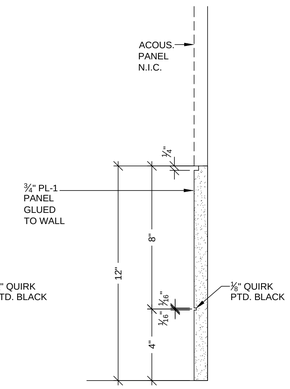

E VERTICAL SECTION
SCALE: 3" = 1'- 0"

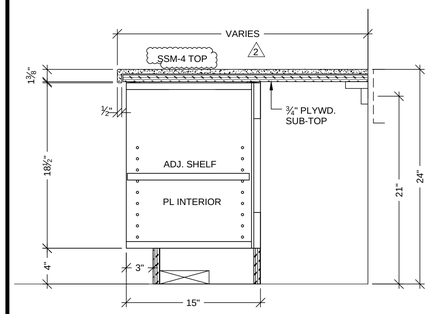

F VERTICAL SECTION
SCALE: 1 1/2" = 1'- 0"
ARCH. REF: A9.0

MCCARTHY APPROVAL

A. Approved as noted for Architectural Review ☐
B. Review and Resubmit ☐
C. Rejected ☐

This review is for general conformance with Plans and Specifications only. Any deviations from same not clearly noted by the Preparer have not been reviewed. Review shall not constitute a complete check of detailed dimensions or count to serve to relieve the Preparer of contractual responsibility for any error or deviation from contract requirements.

McCarthy

By _____ Date _____

SHOP DRAWING REFERENCE NO. _____

NO	DATE	REVISION	SUB #	BY
–		X	–	X
1	10-06-10	PER R.L.C. DATED 9-14-10	–	JB
2	11-21-11	PER SKETCH CHANGES TO RM 2.014 ALL FAITHS MEDITATION RM		LK
3	4-17-12	PER ASI#157 & RFI# 5381-0 MEDITATION RM 2.014, SHEET 2-7		LK

PROJECT : CHOC HOSPITAL TOWER II
455 S. MAIN STREET
ORANGE, CALIFORNIA 92868

FLOOR : LEVEL 2
ROOM # : 2.014
ITEM : WALL PANELS & CABINETS
REF : IAS.2B,A7.1,A7.2,A8.5
ITEM #: 2-100.1,2-100.2
ARCHITECT : FKP
CONTRACTOR : McCARTHY

COPYRIGHT
ALL IDEAS DESIGNS, ARRANGEMENTS AND PLANS INDICATED OR REPRESENTED BY THIS DRAWING ARE THE PROPERTY OF P.A.M. ARCHITECTURAL MILLWORK. THEY WERE CREATED,EVOLVED AND DEVELOPED FOR USE ON AND IN CONNECTION WITH THE SPECIFIED PROJECT. NONE OF SUCH IDEAS, DESIGNS, ARRANGEMENT OF PLANS SHALL BE USED BY OR DISCLOSED TO ANY PERSON, FIRM OR CORPORATION FOR ANY PURPOSE WHATSOEVER WITHOUT THE WRITTEN PERMISSION OF P.A.M.

FIELD VERIFICATION
P.A.M. SHOP DRAWINGS ARE MADE FOR THE EXCLUSIVE USE OF P.A.M. AND ANY OTHER TRADES USING THESE DRAWING USE THEM AT THEIR OWN RISK. DIMENSIONS ARE TAKEN FROM PREVIOUS SHOP DRAWINGS AND FIELD CONDITIONS MAY REQUIRE CHANGES IN DIMENSIONS, SO OTHER TRADES USING THESE DRAWINGS MUST TAKE THEIR OWN FIELD DIMENSIONS.

PACIFIC ARCHITECTURAL MILLWORK
1041 LESLIE ST. LA HABRA, CA. 90631
PH: (714) 525-2059 FAX: (714) 525-2673

DATE: 05-10-10
DRAWN BY: JB
SCALE: NOTED
JOB: 3635
SUBMITTAL: 06
DWG: 2-7.3

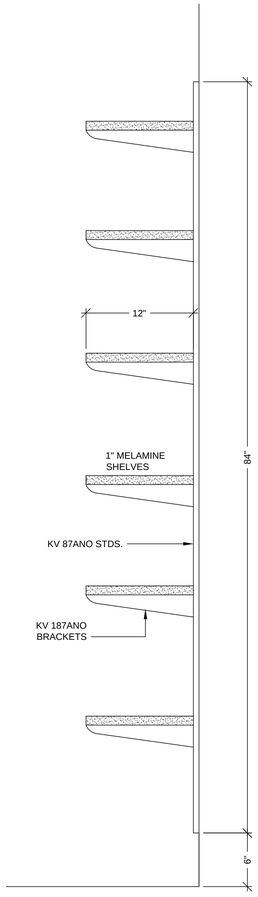

A SECTION
SCALE: 1 1/2"=1'-0"
REF: NONE

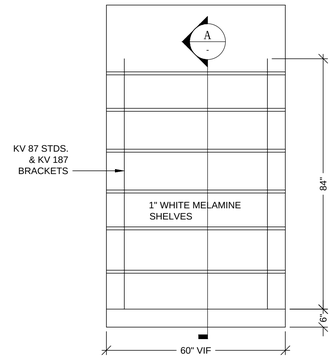

1 ELEVATION
SCALE: 1/2"=1'-0" ROOM: 2.014
REF: D6/A11.8 ITEM: 2-100.3

MCCARTHY APPROVAL

A. Approved as noted for Architectural Review ☐
B. Review and Resubmit ☐
C. Rejected ☐

This review is for general conformance with Plans and Specifications only. Any deviations from same not clearly noted by the Preparer have not been reviewed. Review shall not constitute a complete check of detailed dimensions or count to serve to relieve the Preparer of contractual responsibility for any error or deviation from contract requirements.

McCarthy

By _____ Date _____ _____

SHOP DRAWING REFERENCE NO. _____

DATE	NO	REVISION	SUB #	BY
4-20-12	1	PER ASI 184 DATED 3-14-11	—	JB
	2		—	

PROJECT :
CHOC HOSPITAL
TOWER II
455 S. MAIN STREET
ORANGE, CALIFORNIA 92868

FLOOR : LEVEL 2
ROOM # : 2.014
ITEM : WALL PANELS & CABINETS
REF : IA5.2B,A7.1,A7.2,A8.5
ITEM #: 2-100.1,2-100.2

CONTRACTOR :
McCARTHY

ARCHITECT :
FKP

COPYRIGHT
ALL IDEAS DESIGNS, ARRANGEMENTS AND PLANS INDICATED OR REPRESENTED BY THIS DRAWING ARE OWNED BY, AND THE PROPERTY OF P.A.M. AND WERE CREATED,EVOLVED AND DEVELOPED FOR USE ON, AND IN CONECTION WITH THE SPECIFIED PROJECT. NONE OF SUCH IDEAS, DESIGNS, ARRANGEMENT OF PLANS SHALL BE USED BY OR DISCLOSED TO ANY PERSON, FIRM OR CORPORATION FOR ANY PURPOSE WHATSOEVER WITHOUT THE WRITTEN PERMISSION OF P.A.M.

FIELD VERIFICATION
P.A.M. SHOP DRAWINGS ARE MADE FOR THE EXCLUSIVE USE OF P.A.M. AND ANY OTHER TRADES USING THESE DRAWING USE THEM AT THERE OWN RISK. DIMENSIONS ON THESE DRAWINGS MAY NOT BE ALWAYS NOTED, FIELD CONDITIONS MAY REQUIRE CHANGES IN DIMENSIONS, SO OTHER TRADES USING THESE DRAWINGS MUST TAKE THEIR OWN FIELD DIMENSIONS.

PACIFIC
ARCHITECTURAL MILLWORK
1041 LESLIE ST. LA HABRA, CA. 90631
PH: (714) 525-2059 FAX: (714) 525-2673

DATE: 4-20-12
DRAWN BY: JB SCALE: NOTED
JOB: 3635 SUBMITTAL: 06
DWG: 2-7.4

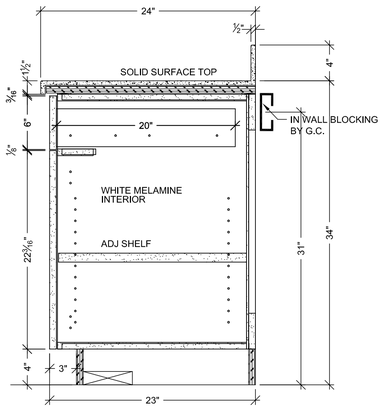

A VERTICAL SECTION
SCALE: 1 1/2" = 1'- 0"
ARCH. REF: A9.0

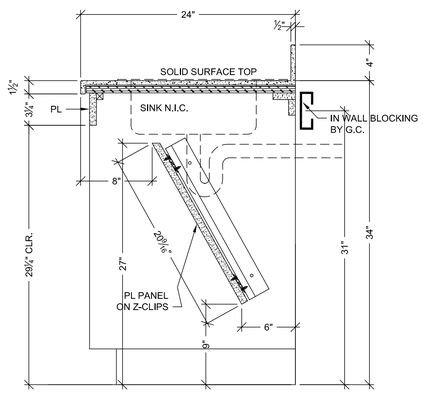

B VERTICAL SECTION
SCALE: 1 1/2" = 1'- 0"
ARCH. REF: A9.0

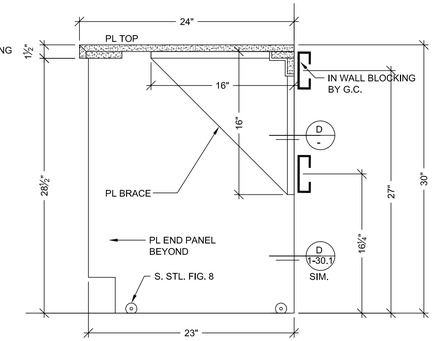

C VERTICAL SECTION
SCALE: 1 1/2" = 1'- 0"
ARCH. REF: A9.0

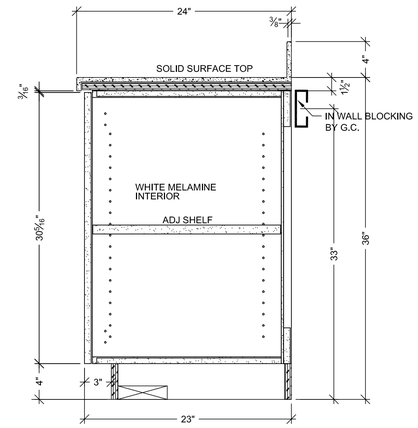

E VERTICAL SECTION
SCALE: 1 1/2" = 1'- 0"
ARCH. REF: A9.0

HARDWARE SCHEDULE

	ITEM	PART NO.	MANUF.	FINISH / COLOR
1	METAL WIRE PULL 4" CTC	MC402-4-A	EPCO	SATIN CLR. ANODIZED
2	BLUM HINGE PLATE	B173L810	BLUM	NICKLE PLATED
3	BLUM HINGE (INSERTA)	73T5590 F.O., S.C. , 120	BLUM	NICKLE PLATED
4	METAL SHELF SUPPORT	282.04.711	HAFELE	NICKLE PLATED
5	DRAWER SLIDES	AC7432-20	ACCURIDE	ZINC
6	FIG. 8 ANGLES	?	?	STAINLESS STEEL
7				
8				
9				
10				

FINISH SCHEDULE

2 PL 1 - PLASTIC LAMINATE - (CABINETS)
WILSONART 10745-60 FONTHILL PEAR MATTE

SSM 4 - SOLID SURFACE - (TOPS)
AVONITE KOKOURA F19117

2 PL 3 - PLASTIC LAMINATE - (TOPS)
FORMICA 300-58 SAIL WHITE OXIDE MATTE

SEE SHEET B-1 FOR CABINET BACKING DETAILS

WHITE MELAMINE INTERIORS U.N.O.

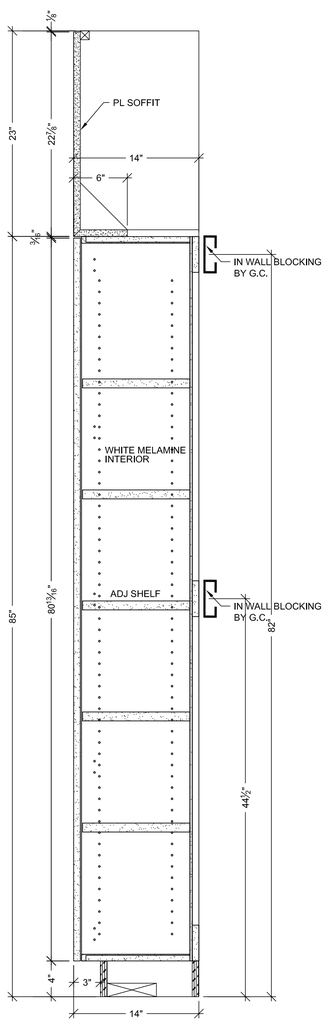

F VERTICAL SECTION
SCALE: 1 1/2" = 1'- 0"
ARCH. REF: A9.0

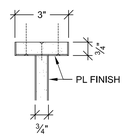

D PLAN SECTION
SCALE: 3" = 1'- 0"
ARCH. REF: A9.0

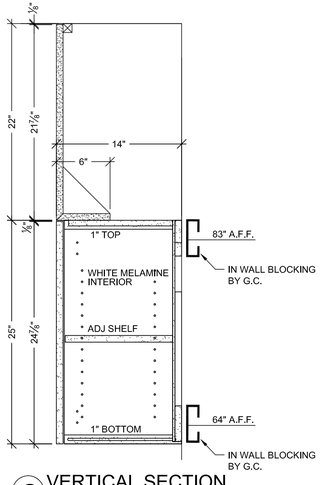

G VERTICAL SECTION
SCALE: 1 1/2" = 1'- 0"
ARCH. REF: A9.0

OMITTED

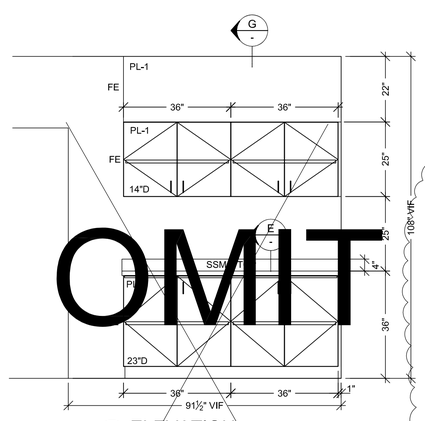

8 ELEVATION
SCALE: 1/2" = 1'- 0" ITEM: 2-126
ROOM: 2.037.05
ARCH. REF: A9.0

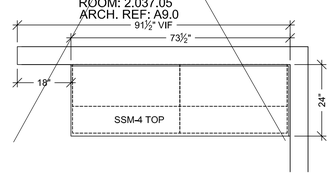

7 FLOOR PLAN
SCALE: 1/2" = 1'- 0" ITEM: 2-126
ROOM: 2.037.05
ARCH. REF: A3.2K
CONFERENCE

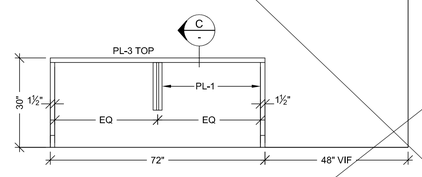

6 ELEVATION
SCALE: 1/2" = 1'- 0" ITEM: 2-116.1
ROOM: 2.007
ARCH. REF: A9.0

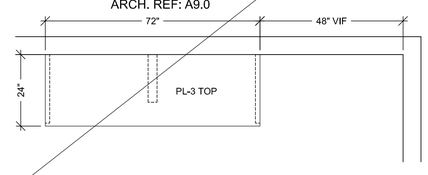

5 FLOOR PLAN
SCALE: 1/2" = 1'- 0" ITEM: 2-116.1
ROOM: 2.007
ARCH. REF: A3.2H
GIFT SHOP / OFFICE STORAGE

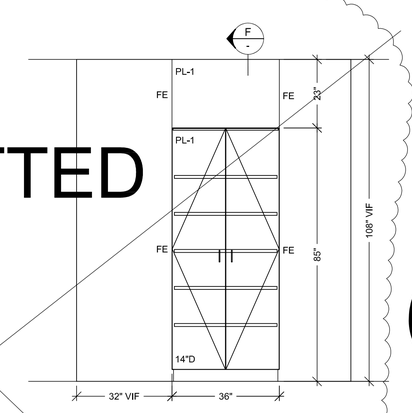

4 ELEVATION
SCALE: 1/2" = 1'- 0" ITEM: 2-116.1
ROOM: 2.007
ARCH. REF: A9.0

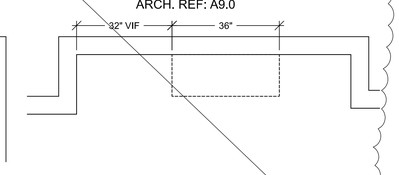

3 FLOOR PLAN
SCALE: 1/2" = 1'- 0" ITEM: 2-116.1
ROOM: 2.007
ARCH. REF: A3.2H
GIFT SHOP / OFFICE STORAGE

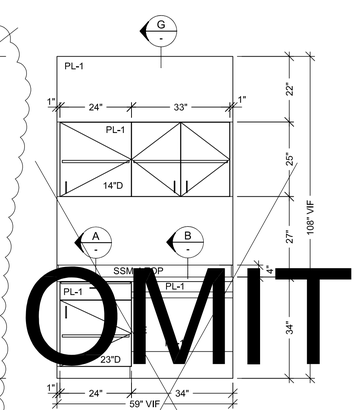

2 ELEVATION
SCALE: 1/2" = 1'- 0" ITEM: 2-116
ROOM: 2.037
ARCH. REF: A9.0

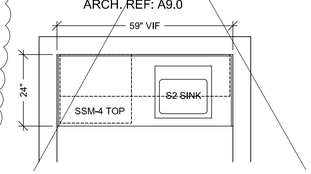

1 FLOOR PLAN
SCALE: 1/2" = 1'- 0" ITEM: 2-116
ROOM: 2.037
ARCH. REF: A3.2H
MEDICAL STAFF SERVICES SUITE

OMIT

OMIT

MCCARTHY APPROVAL

A. Approved as noted for Architectural Review ☐
B. Review and Resubmit ☐
C. Rejected ☐

This review is for general conformance with Plans and Specifications only. Any deviations from same not clearly noted by the Preparer have not been reviewed. Review shall not constitute a complete check of detailed dimensions or count to serve to relieve the Preparer of contractual responsibility for any error or deviation from contract requirements.

McCarthy

By _____ Date _____
SHOP DRAWING REFERENCE NO. _____

RELEASE FOR PRODUCTION

SIGNATURE: _____

DATE: _____

NOTE: NO CHANGES CAN BE MADE AFTER AUTHORIZATION TO PROCEED.

NO	DATE	REVISION	SUB. #	BY
	–	X	–	X
1	10-06-10	PER R.L.C. DATED 9-14-10	–	JB
2	12-17-11	PER A.S.I. 136 DATED 11-17-11	–	JB
3	–	–	–	–
4	–	–	–	–
5	–	–	–	–
6	–	–	–	–

PROJECT :
CHOC HOSPITAL
TOWER II
455 S. MAIN STREET
ORANGE, CALIFORNIA 92868

ITEM #: 2-116,2-116.1,2-126

CONTRACTOR:
McCARTHY

FLOOR : LEVEL 2
ROOM #: 2.007,2.037,2.037.05
ITEM : TOPS & CABINETS
REF : A9.0, A3.2H,A3.2K

ARCHITECT :
FKP

COPYRIGHT
ALL IDEAS DESIGNS, ARRANGEMENTS AND PLANS INDICATED OR REPRESENTED BY THIS DRAWING ARE OWNED BY, AND THE PROPERTY OF P.A.M. AND WERE CREATED,EVOLVED AND DEVELOPED FOR USE ON, AND IN CONNECTION WITH THE SPECIFIED PROJECT. NONE OF SUCH IDEAS, DESIGNS, ARRANGEMENT OF PLANS SHALL BE USED BY OR DISCLOSED TO ANY PERSON, FIRM OR CORPORATION FOR ANY PURPOSE WHATSOEVER WITHOUT THE WRITTEN PERMISSION OF P.A.M.

FIELD VERIFICATION
P.A.M. SHOP DRAWINGS ARE MADE FOR THE EXCLUSIVE USE OF P.A.M. AND ANY OTHER TRADES USING THESE DRAWING USE THEM AT THERE OWN RISK. DIMENSIONS ON THESE DRAWINGS MAY NOT BE ALWAYS NOTED. FIELD CONDITIONS MAY REQUIRE CHANGES IN DIMENSIONS, SO OTHER TRADES USING THESE DRAWINGS MUST TAKE THEIR OWN FIELD DIMENSIONS.

PACIFIC
ARCHITECTURAL MILLWORK
104 LESLIE ST LA HABRA, CA. 90631
PH: (714) 525-2059 FAX: (714) 525-2073

DATE: 05-10-10
DRAWN BY: JB
SCALE: NOTED
JOB: 3635
SUBMITTAL: 06
DWG: 2-8

HARDWARE SCHEDULE

	ITEM	PART NO.	MANUF.	FINISH / COLOR
1	METAL WIRE PULL 4" CTC	MC402-4-A	EPCO	SATIN CLR. ANODIZED
2	BLUM HINGE PLATE	B173L810	BLUM	NICKLE PLATED
3	BLUM HINGE (INSERTA)	73T5590 F.O., S.C. , 120	BLUM	NICKLE PLATED
4	METAL SHELF SUPPORT	282.04.711	HAFELE	NICKLE PLATED
5	DRAWER SLIDES	AC7432-20	ACCURIDE	ZINC
6				
7				
8				
9				
10				

FINISH SCHEDULE

2 PL 3 - PLASTIC LAMINATE - (TOPS)
FORMICA 300-58 SAIL WHITE OXIDE MATTE

2 PL 1 - PLASTIC LAMINATE - (CABINETS)
WILSONART 10745-60 FONTHILL PEAR MATTE

SEE SHEET B-1 FOR CABINET BACKING DETAILS

WHITE MELAMINE INTERIORS U.N.O.

MCCARTHY APPROVAL

A. Approved as noted for Architectural Review ☐
B. Review and Resubmit ☐
C. Rejected ☐

This review is for general conformance with Plans and Specifications only. Any deviations from same not clearly noted by the Preparer have not been reviewed. Review shall not constitute a complete check of detailed dimensions or count to serve to relieve the Preparer of contractual responsibility for any error or deviation from contract requirements.

McCarthy

By _____ Date _____

SHOP DRAWING REFERENCE NO. _____

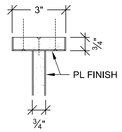

D PLAN SECTION
SCALE: 3" = 1'- 0"
ARCH. REF: A9.0

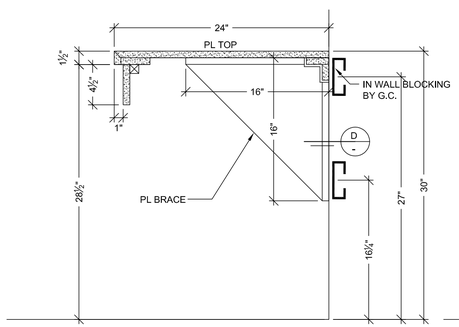

C VERTICAL SECTION
SCALE: 1 1/2" = 1'- 0"
ARCH. REF: A9.0

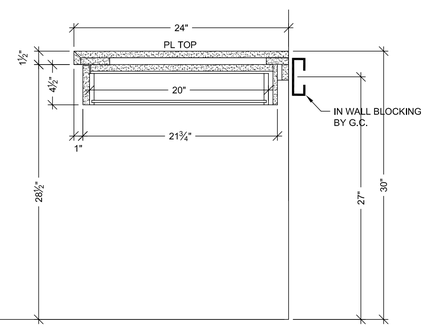

E VERTICAL SECTION
SCALE: 1 1/2" = 1'- 0"
ARCH. REF: A9.0

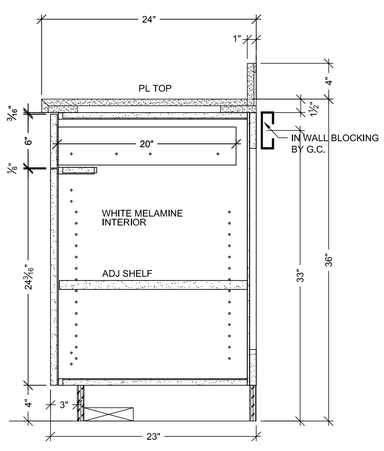

A VERTICAL SECTION
SCALE: 1 1/2" = 1'- 0"
ARCH. REF: A9.0

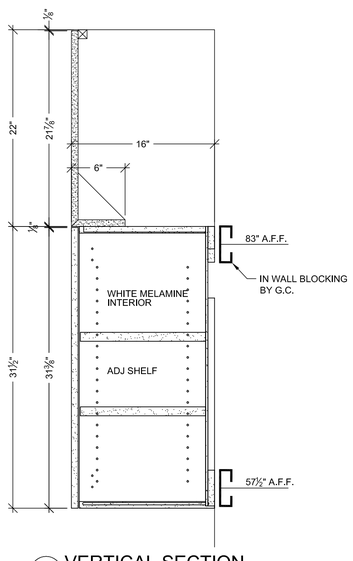

B VERTICAL SECTION
SCALE: 1 1/2" = 1'- 0"
ARCH. REF: A9.0

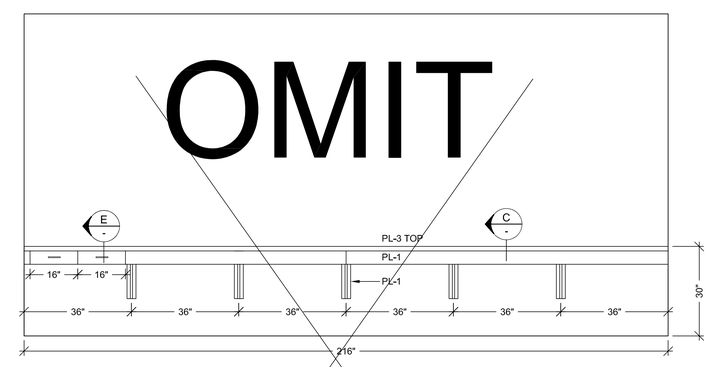

4 ELEVATION
SCALE: 1/2" = 1'- 0" ITEM: 2-125
ROOM: 2.042
ARCH. REF: A9.0

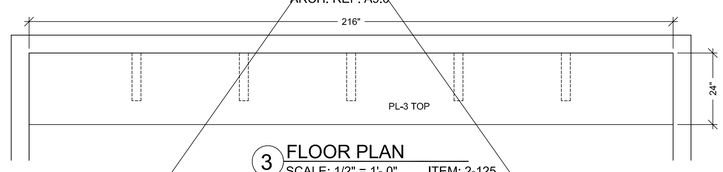

3 FLOOR PLAN
SCALE: 1/2" = 1'- 0" ITEM: 2-125
ROOM: 2.042
ARCH. REF: A3.2J

OFFICE OPEN AREA

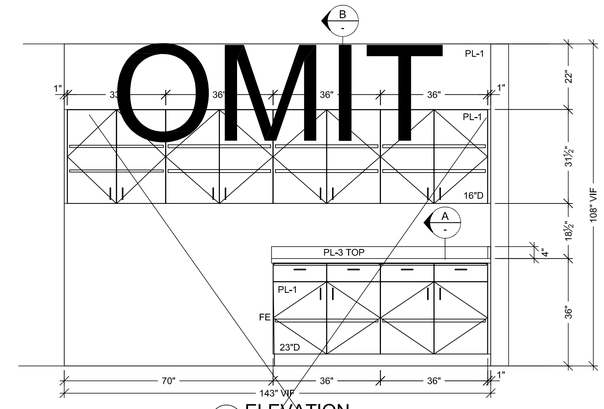

2 ELEVATION
SCALE: 1/2" = 1'- 0" ITEM: 2-123
ROOM: 2.037.00.A
ARCH. REF: A9.0

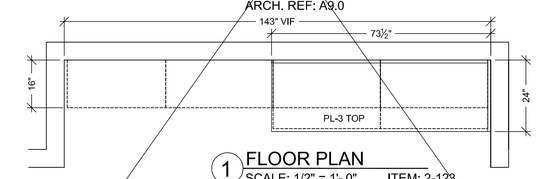

1 FLOOR PLAN
SCALE: 1/2" = 1'- 0" ITEM: 2-123
ROOM: 2.037.00.A
ARCH. REF: A3.2J

ADMIN. / RECEPTION

RELEASE FOR PRODUCTION

SIGNATURE: _____

DATE: _____

NOTE: NO CHANGES CAN BE MADE AFTER AUTHORIZATION TO PROCEED.

DATE	NO	REVISION	SUB. #	BY
–	1	X	–	X
10-06-10	2	PER R.L.C. DATED 9-14-10	–	JB
–	3	–	–	
–	4	–	–	
–	5	–	–	
–	6	–	–	

PROJECT :
CHOC HOSPITAL
TOWER II
455 S. MAIN STREET
ORANGE, CALIFORNIA 92868

FLOOR : LEVEL 2
ROOM # : 2.037.00.A, 2.042 ITEM # : 2-123,2-125
ITEM : TOPS & CABINETS
REF : A9.0

CONTRACTOR :
McCARTHY

ARCHITECT :
FKP

COPYRIGHT
ALL IDEAS DESIGNS, ARRANGEMENTS AND PLANS INDICATED OR REPRESENTED BY THIS DRAWING ARE OWNED BY, AND THE PROPERTY OF PACIFIC AND WERE PREPARED BY PACIFIC FOR USE IN CONNECTION WITH AND IN CONNECTION WITH THE SPECIFIED PROJECT. NONE OF SUCH IDEAS, DESIGNS, ARRANGEMENT OF PLANS SHALL BE USED BY OR DISCLOSED TO ANY PERSON, FIRM OR CORPORATION FOR ANY PURPOSE WHATSOEVER WITHOUT THE WRITTEN PERMISSION OF PACIFIC.

FIELD VERIFICATION
P.A.M. SHOP DRAWINGS ARE MADE FOR THE EXCLUSIVE USE OF P.A.M. AND ANY OTHER TRADES USING THESE DRAWINGS. FIELD CONDITIONS MAY DIFFER FROM DIMENSIONS ON THESE DRAWINGS MAY NOT BE ALWAYS NOTED. FIELD CONDITIONS MAY REQUIRE CHANGES IN DIMENSIONS. SO OTHER TRADES USING THESE DRAWINGS MUST TAKE THEIR OWN FIELD DIMENSIONS.

PACIFIC
ARCHITECTURAL MILLWORK
1041 LESLIE ST. LA HABRA, CA. 90631
PH: (714) 525-2069 FAX: (714) 525-2073

DATE: 05-10-10
DRAWN BY: JB
SCALE: NOTED
JOB: 3635
SUBMITTAL: 06
DWG: 2-9

HARDWARE SCHEDULE

	ITEM	PART NO.	MANUF.	FINISH / COLOR
1	METAL WIRE PULL 4" CTC	MC402-4-A	EPCO	SATIN CLR. ANODIZED
2	BLUM HINGE PLATE	B173L810	BLUM	NICKLE PLATED
3	BLUM HINGE (INSERTA)	73T5590 F.O., S.C. , 120	BLUM	NICKLE PLATED
4	METAL SHELF SUPPORT	282.04.711	HAFELE	NICKLE PLATED
5	WALL SHELF STANDARDS	KV87ANO72	KV	ANOCHROME
6	WALL SHELF BRACKETS	KV187ANO14	KV	ANOCHROME
7	DRAWER SLIDES	AC7432-20	ACCURIDE	ZINC
8				
9				
10				

FINISH SCHEDULE

2 PL 3 - PLASTIC LAMINATE - (TOPS)
FORMICA 300-58 SAIL WHITE OXIDE MATTE

2 PL 1 - PLASTIC LAMINATE - (CABINETS)
WILSONART 10745-60 FONTHILL PEAR MATTE

2 PL 2 - PLASTIC LAMINATE - (TOPS)
FORMICA 7012-58 AMBER MAPLE MATTE

SEE SHEET B-1 FOR CABINET BACKING DETAILS

WHITE MELAMINE INTERIORS U.N.O.

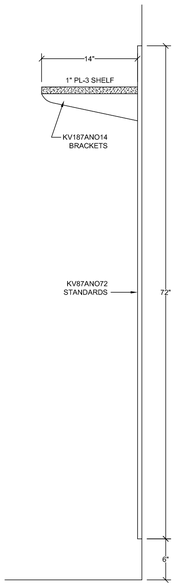

D VERTICAL SECTION
SCALE: 1 1/2" = 1'- 0"
ARCH. REF: A9.0

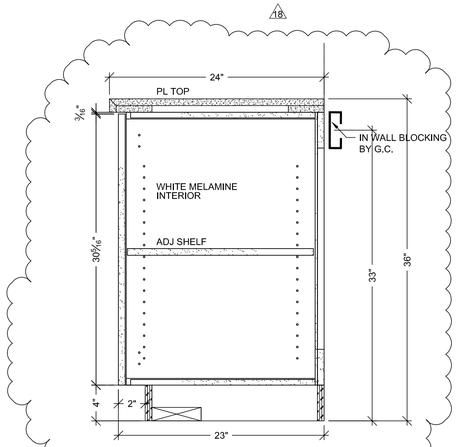

E VERTICAL SECTION
SCALE: 1 1/2" = 1'- 0"
ARCH. REF: A9.0

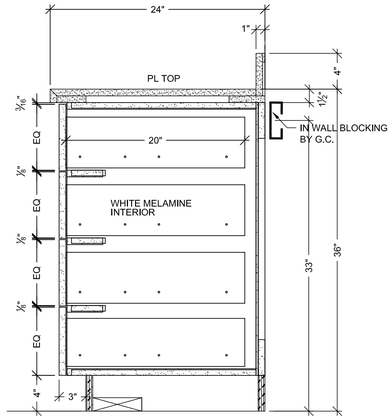

1 B VERTICAL SECTION
SCALE: 1 1/2" = 1'- 0"
ARCH. REF: A9.0

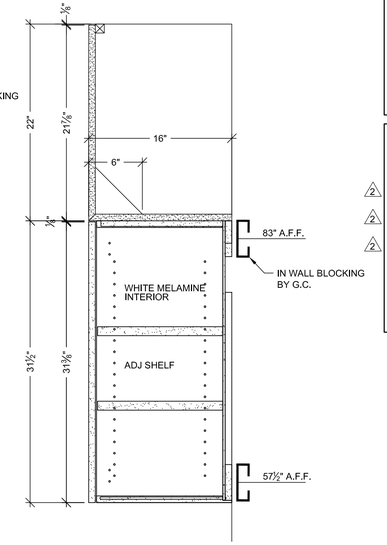

C VERTICAL SECTION
SCALE: 1 1/2" = 1'- 0"
ARCH. REF: A9.0

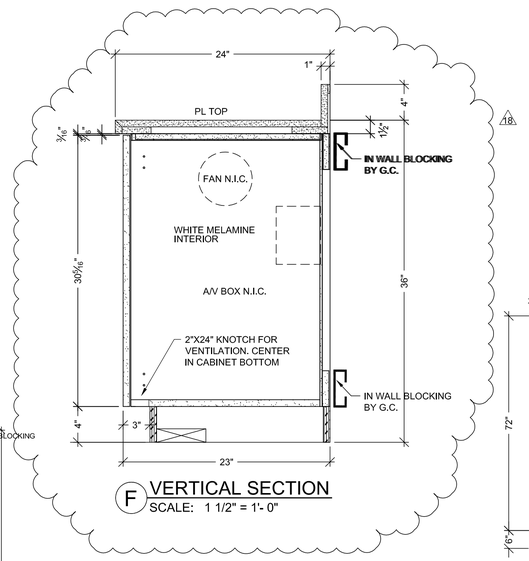

F VERTICAL SECTION
SCALE: 1 1/2" = 1'- 0"

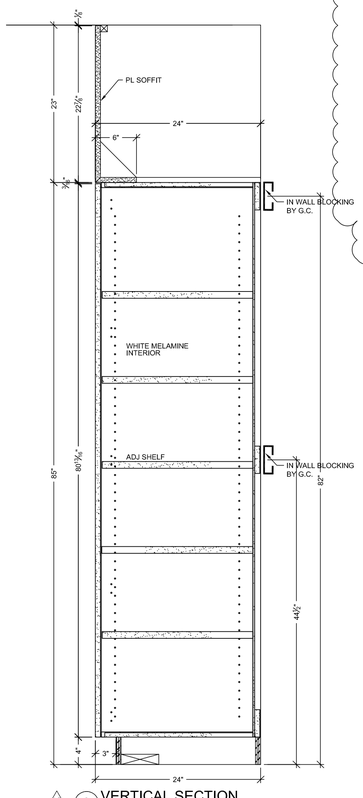

18 A VERTICAL SECTION
SCALE: 1 1/2" = 1'- 0"
ARCH. REF: A9.0

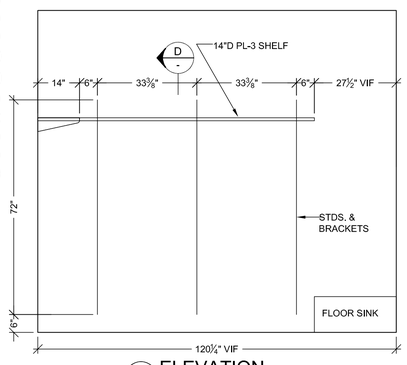

6 ELEVATION
SCALE: 1/2" = 1'- 0" ITEM: 2-129
ROOM: 2.048
ARCH. REF: A9.0

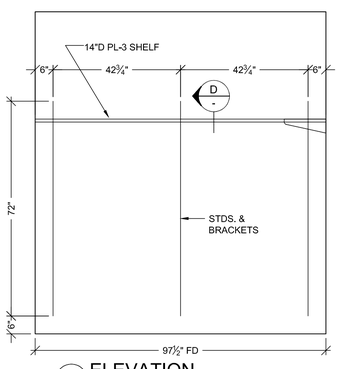

7 ELEVATION
SCALE: 1/2" = 1'- 0" ITEM: 2-129
ROOM: 2.048
ARCH. REF: A9.0

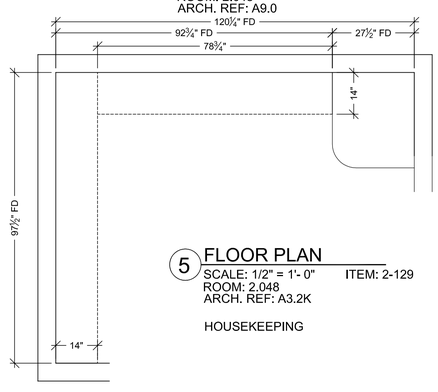

5 FLOOR PLAN
SCALE: 1/2" = 1'- 0" ITEM: 2-129
ROOM: 2.048
ARCH. REF: A3.2K

HOUSEKEEPING

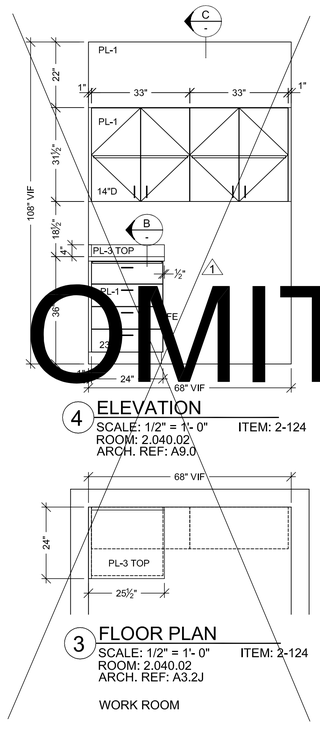

OMIT

4 ELEVATION
SCALE: 1/2" = 1'- 0" ITEM: 2-124
ROOM: 2.040.02
ARCH. REF: A9.0

3 FLOOR PLAN
SCALE: 1/2" = 1'- 0" ITEM: 2-124
ROOM: 2.040.02
ARCH. REF: A3.2J

WORK ROOM

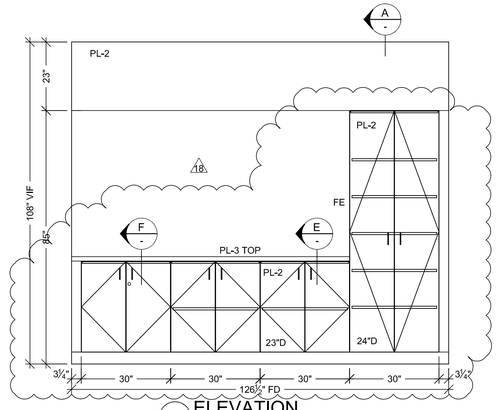

2 ELEVATION
SCALE: 1/2" = 1'- 0" ITEM: 2-118
ROOM: 2.026.06
ARCH. REF: A9.0

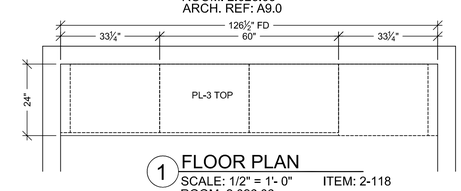

1 FLOOR PLAN
SCALE: 1/2" = 1'- 0" ITEM: 2-118
ROOM: 2.026.06
ARCH. REF: A3.2J

MUSIC THERAPY

MCCARTHY APPROVAL

A. Approved as noted for Architectural Review ☐
B. Review and Resubmit ☐
C. Rejected ☐

This review is for general conformance with Plans and Specifications only. Any deviations from same not clearly noted by the Preparer have not been reviewed. Review shall not constitute a complete check of detailed dimensions or count to serve to relieve the Preparer of contractual responsibility for any error or deviation from contract requirements.

McCarthy

By _____ Date _____

SHOP DRAWING REFERENCE NO. _____

DATE	NO	REVISION	SUB. #	BY
8-14-10	1	PER RFI #1483-0 DATED 5-18-10	–	JB
10-06-10	2	PER R.L.C. DATED 9-14-10	–	JB
7-18-11	18	PER C.O. #174 DATED 3-28-11	–	JB
2-29-12	5	FIELD DIMENSIONS	–	MW
–	6		–	
2-29-12		FIELD DIMENSIONS	–	MW

PROJECT :
CHOC HOSPITAL
TOWER II
455 S. MAIN STREET
ORANGE, CALIFORNIA 92868

FLOOR : LEVEL 2
ROOM # : 2.040.02,2.026.06,2.048
ITEM : TOPS,CABINETS & SHELVES
REF : A9.0, A3.2J,A3.2K
ITEM #: 2-118,2-124,2-129
CONTRACTOR : McCARTHY
ARCHITECT : FKP

COPYRIGHT
ALL IDEAS DESIGNS, ARRANGEMENTS AND PLANS INDICATED OR REPRESENTED BY THIS DRAWING ARE OWNED BY, AND THE PROPERTY OF P.A.M. AND WERE CREATED, EVOLVED AND DEVELOPED FOR USE ON, AND IN CONECTION WITH THE SPECIFIED PROJECT, NONE OF SUCH IDEAS DESIGNS, ARRANGEMENTS AND PLANS SHALL BE USED BY OR DISCLOSED TO ANY PERSON, FIRM OR CORPORATION FOR ANY PURPOSE WHATSOEVER WITHOUT THE WRITTEN PERMISSION OF P.A.M.

FIELD VERIFICATION

P.A.M. SHOP DRAWINGS ARE MADE FOR THE EXCLUSIVE USE OF P.A.M. AND ANY OTHER TRADES USING THESE DRAWING USE THEM AT THEIR OWN RISK. DIMENSIONS ON THESE DRAWINGS MAY NOT BE ALWAYS NOTED, FIELD CONDITIONS MAY REQUIRE CHANGES IN DIMENSIONS, SO OTHER TRADES USING THESE DRAWINGS MUST TAKE THEIR OWN FIELD DIMENSIONS.

PACIFIC ARCHITECTURAL MILLWORK
1041 LESLIE ST. LA HABRA, CA. 90631
PH: (714) 525-2093 FAX: (714) 525-2073

DATE: 05-10-10	
DRAWN BY: JB	SCALE: NOTED
JOB: 3635	SUBMITTAL: 06
DWG: 2-10	

RELEASE FOR PRODUCTION
SIGNATURE: _____
DATE: _____
NOTE: NO CHANGES CAN BE MADE AFTER AUTHORIZATION TO PROCEED.

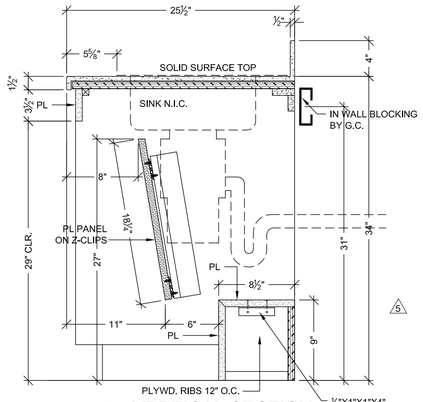

4 C VERTICAL SECTION
SCALE: 1 1/2" = 1'- 0"
ARCH. REF: A9.0

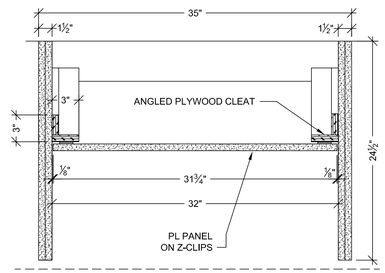

4 D PLAN SECTION
SCALE: 1 1/2" = 1'- 0"

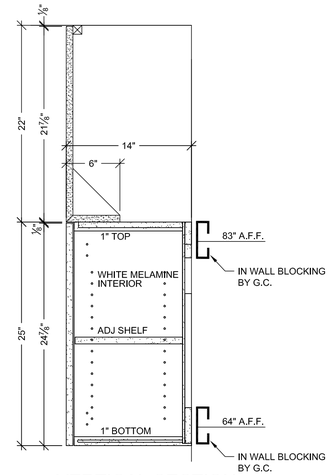

E VERTICAL SECTION
SCALE: 1 1/2" = 1'- 0"
ARCH. REF: A9.0

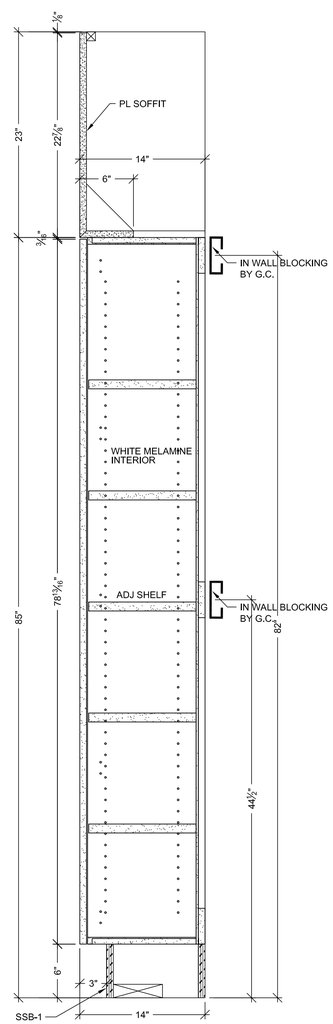

A VERTICAL SECTION
SCALE: 1 1/2" = 1'- 0"
ARCH. REF: A9.0

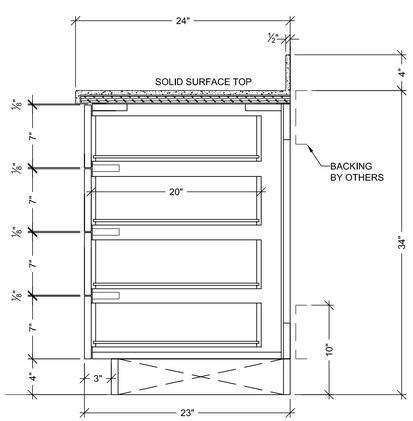

B VERTICAL SECTION
SCALE: 1 1/2" = 1'- 0"
ARCH. REF: A9.0

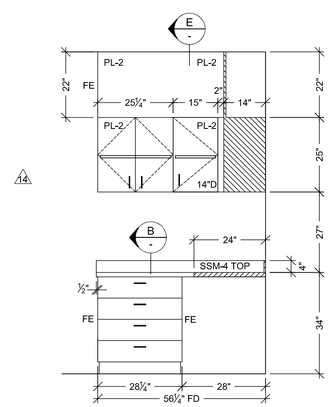

5 ELEVATION
SCALE: 1/2" = 1'- 0" ITEM: 2.108
ROOM: 2.074.02
ARCH. REF: A9.0

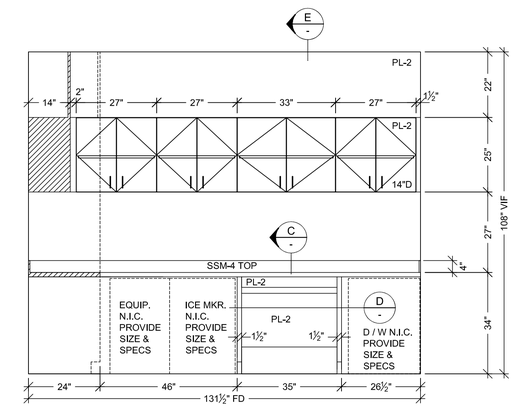

4 ELEVATION
SCALE: 1/2" = 1'- 0" ITEM: 2.108
ROOM: 2.074.02
ARCH. REF: C1/A9.2A

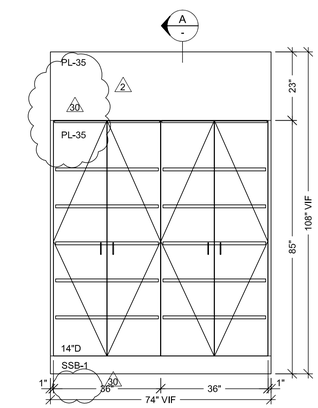

2 ELEVATION
SCALE: 1/2" = 1'- 0" ITEM: 2.106
ROOM: 2.075
ARCH. REF: A9.0

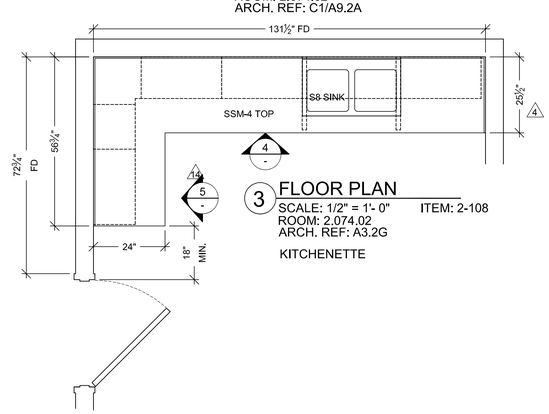

3 FLOOR PLAN
SCALE: 1/2" = 1'- 0" ITEM: 2-108
ROOM: 2.074.02
ARCH. REF: A3.2G

KITCHENETTE

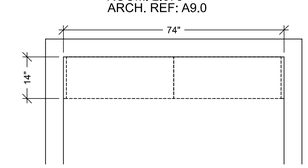

1 FLOOR PLAN
SCALE: 1/2" = 1'- 0" ITEM: 2-106
ROOM: 2.075
ARCH. REF: A3.2G

ACTIVITY ROOM

HARDWARE SCHEDULE

	ITEM	PART NO.	MANUF.	FINISH / COLOR
1	METAL WIRE PULL 4" CTC	MC402-4-A	EPCO	SATIN CLR. ANODIZED
2	BLUM HINGE PLATE	B173L810	BLUM	NICKLE PLATED
3	BLUM HINGE (INSERTA)	73T5590 F.O., S.C. , 120	BLUM	NICKLE PLATED
4	METAL SHELF SUPPORT	282.04.711	HAFELE	NICKLE PLATED
5	DRAWER SLIDES	AC7432-20	ACCURIDE	ZINC
6				
7				
8				
9				
10				

FINISH SCHEDULE

PL 2 - PLASTIC LAMINATE - (CABINETS)
FORMICA 7012-58 AMBER MAPLE MATTE

30 PL 35 - PLASTIC LAMINATE - (CABINETS)
FORMICA 7223C-90 NEW WHITE GLOSS (COLOR CORE 2)

SSM 4 - SOLID SURFACE - (TOPS)
AVONITE KOKOURA F19117

30 SSB 1 - CABINET BASE
18 GAUGE STAINLESS STEEL W/ #4 FINISH

SEE SHEET B-1 FOR CABINET BACKING DETAILS

WHITE MELAMINE INTERIORS U.N.O.

1-10-12 30 PER C.O. #232 DATED 10-10-11 JB

MCCARTHY APPROVAL

A. Approved as noted for Architectural Review ☐
B. Review and Resubmit ☐
C. Rejected ☐

This review is for general conformance with Plans and Specifications only. Any deviations from same not clearly noted by the Preparer have not been reviewed. Review shall not constitute a complete check of detailed dimensions or count to serve to relieve the Preparer of contractual responsibility for any error or deviation from contract requirements.

McCarthy

By _____ Date _____

SHOP DRAWING REFERENCE NO. _____

DATE	NO	REVISION	SUB. #	BY
–	X		–	X
10-06-10	1	PER R.L.C. DATED 9-14-10	–	JB
1-5-11	2	PER ASI #48 DATED 12-1-10	–	JB
1-19-11	4	PER RFI #2768-0 DATED 1-11-11	–	JB
6-8-11	5	PER RFI #2659-0 DATED 12-14-10	–	JB
2-29-12	6	PARTIAL FIELD DIMENSIONS	–	MW

PROJECT :
CHOC HOSPITAL
TOWER II
455 S. MAIN STREET
ORANGE, CALIFORNIA 92868

FLOOR : LEVEL 2
ROOM #: 2.074,02,2.075
ITEM : TOPS & CABINETS
REF : A9.0 A3.2G
ITEM #: 2-106,2-108

CONTRACTOR :
McCARTHY

ARCHITECT :
FKP

COPYRIGHT
ALL IDEAS DESIGNS, ARRANGEMENTS AND PLANS INDICATED OR REPRESENTED BY THIS DRAWING ARE OWNED BY, AND THE PROPERTY OF P.A.M. AND WERE CREATED,EVOLVED AND DEVELOPED FOR USE ON, AND IN CONNECTION WITH THE SPECIFIED PROJECT. NONE OF SUCH IDEAS, DESIGNS, ARRANGEMENT OF PLANS SHALL BE USED BY OR DISCLOSED TO ANY PERSON, FIRM OR CORPORATION FOR ANY PURPOSE WHATSOEVER WITHOUT THE WRITTEN PERMISSION OF P.A.M.

FIELD VERIFICATION
P.A.M. SHOP DRAWINGS ARE MADE FOR THE EXCLUSIVE USE OF P.A.M. AND ANY OTHER TRADES USING THESE DRAWING USE THEM AT THERE OWN RISK. DIMENSIONS ON THESE DRAWINGS MAY NOT BE ALWAYS NOTED. FIELD CONDITIONS MAY REQUIRE CHANGES IN DIMENSIONS, SO OTHER TRADES USING THESE DRAWINGS MUST TAKE THEIR OWN FIELD DIMENSIONS.

PACIFIC ARCHITECTURAL MILLWORK
104 LESLIE ST LA HABRA, CA. 90631
PH: (714) 525-2059 FAX: (714) 525-2073

DATE: 05-10-10
DRAWN BY: JB
SCALE: NOTED
JOB: 3635
SUBMITTAL: 06
DWG: 2-11

RELEASE FOR PRODUCTION
SIGNATURE: _____
DATE: _____
NOTE: NO CHANGES CAN BE MADE AFTER AUTHORIZATION TO PROCEED.

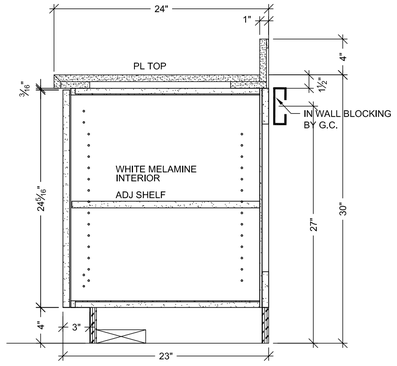

C VERTICAL SECTION
SCALE: 1 1/2" = 1'- 0"
ARCH. REF: A9.0

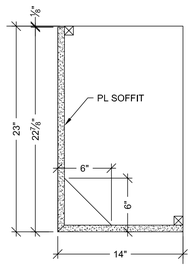

D VERTICAL SECTION
SCALE: 1 1/2" = 1'- 0"
ARCH. REF: A9.0

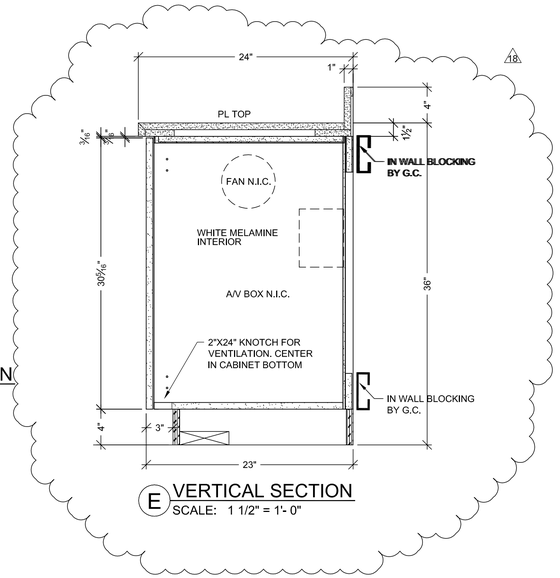

E VERTICAL SECTION
SCALE: 1 1/2" = 1'- 0"

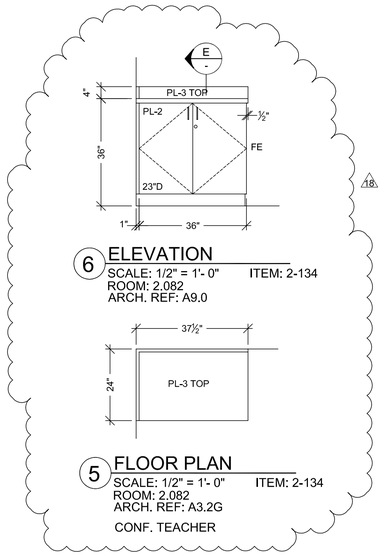

6 ELEVATION
SCALE: 1/2" = 1'- 0" ITEM: 2-134
ROOM: 2.082
ARCH. REF: A9.0

5 FLOOR PLAN
SCALE: 1/2" = 1'- 0" ITEM: 2-134
ROOM: 2.082
ARCH. REF: A3.2G
CONF. TEACHER

HARDWARE SCHEDULE

	ITEM	PART NO.	MANUF.	FINISH / COLOR
1	METAL WIRE PULL 4" CTC	MC402-4-A	EPCO	SATIN CLR. ANODIZED
2	BLUM HINGE PLATE	B173L810	BLUM	NICKLE PLATED
3	BLUM HINGE (INSERTA)	73T5590 F.O., S.C. , 120	BLUM	NICKLE PLATED
4	METAL SHELF SUPPORT	282.04.711	HAFELE	NICKLE PLATED
5	CABINET DOOR LOCKS	100DR	OLYMPUS	SATIN CHROME
6				
7				
8				
9				
10				

FINISH SCHEDULE

2 PL 2 - PLASTIC LAMINATE - (CABINETS)
FORMICA 7012-58 AMBER MAPLE MATTE

2 PL 19 - TOPS
FORMICA 6942-58 CHARCOAL BOOMERANG MATTE

PL 3 - PLASTIC LAMINATE - (TOPS)
FORMICA 300-58 SAIL WHITE OXIDE MATTE

SEE SHEET B-1 FOR CABINET BACKING DETAILS

WHITE MELAMINE INTERIORS U.N.O.

MCCARTHY APPROVAL

A. Approved as noted for Architectural Review ☐
B. Review and Resubmit ☐
C. Rejected ☐

This review is for general conformance with Plans and Specifications only. Any deviations from same not clearly noted by the Preparer have not been reviewed. Review shall not constitute a complete check of detailed dimensions or count to serve to relieve the Preparer of contractual responsibility for any error or deviation from contract requirements.

McCarthy

By _____ Date _____
SHOP DRAWING REFERENCE NO. _____

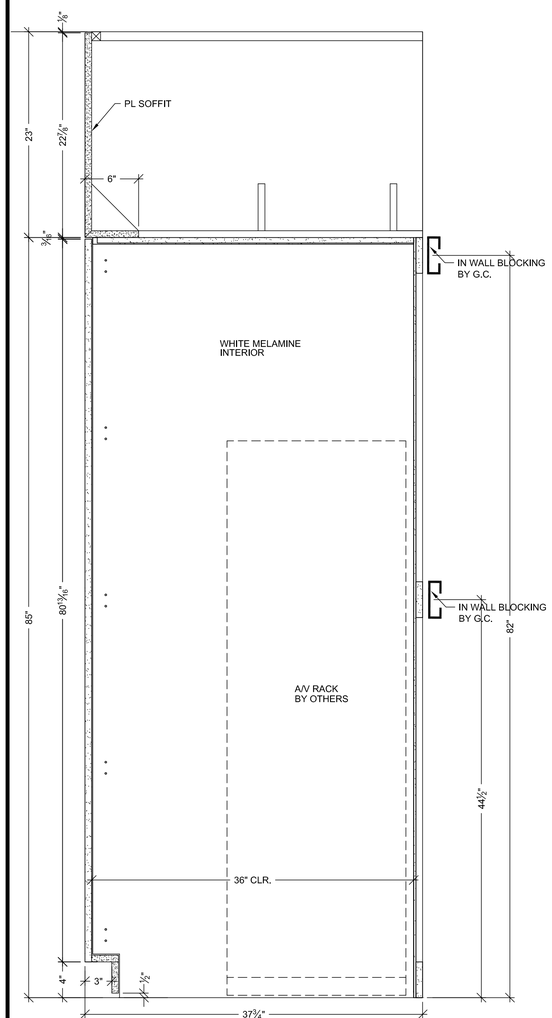

18 A VERTICAL SECTION
SCALE: 1 1/2" = 1'- 0"
ARCH. REF: A9.0

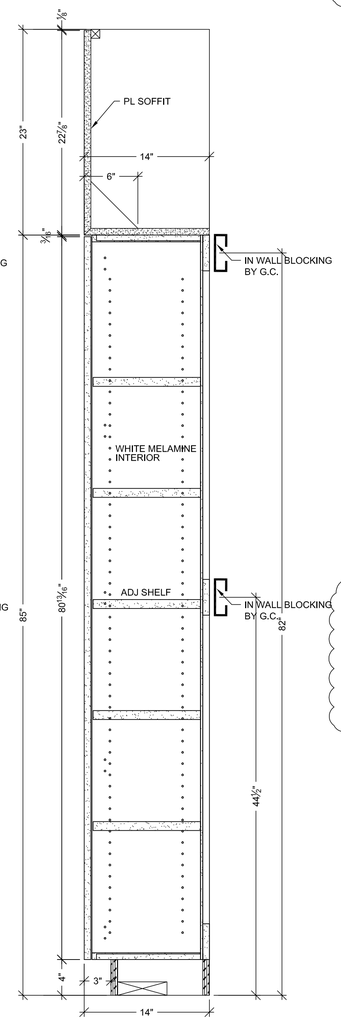

B VERTICAL SECTION
SCALE: 1 1/2" = 1'- 0"
ARCH. REF: A9.0

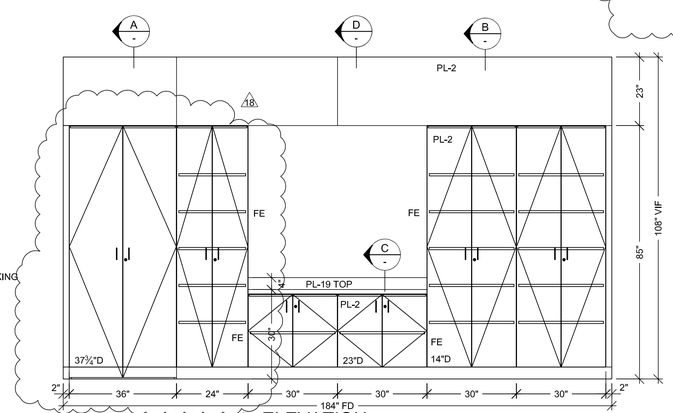

4 ELEVATION
SCALE: 1/2" = 1'- 0" ITEM: 2-107
ROOM: 2.076
ARCH. REF: C3/A9.2A

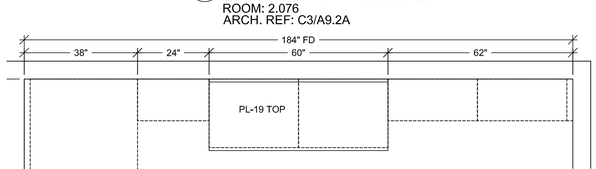

3 FLOOR PLAN
SCALE: 1/2" = 1'- 0" ITEM: 2-107
ROOM: 2.076
ARCH. REF: A3.2G
TEEN ROOM

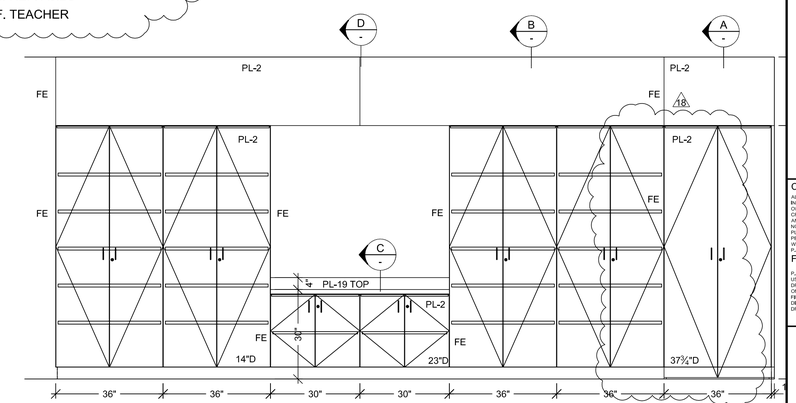

2 ELEVATION
SCALE: 1/2" = 1'- 0" ITEM: 2-105
ROOM: 2.074
ARCH. REF: C5/A9.2A

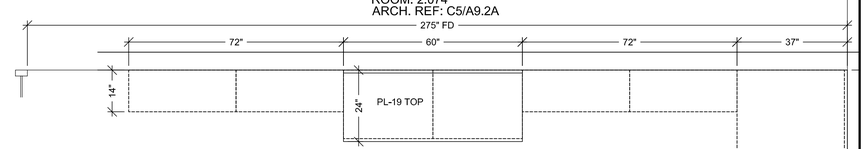

1 FLOOR PLAN
SCALE: 1/2" = 1'- 0" ITEM: 2-105
ROOM: 2.074
ARCH. REF: A3.2G
PRE-TEEN ROOM

RELEASE FOR PRODUCTION

SIGNATURE: _____

DATE: _____

NOTE: NO CHANGES CAN BE MADE AFTER AUTHORIZATION TO PROCEED.

DATE	NO	REVISION	SUB. #	BY
7-18-11	18	PER C.O. #174 DATED 3-28-11	-	JB
10-06-10	2	PER R.L.C. DATED 9-14-10	-	JB
	3		-	
	4		-	
-	5	-	-	-
-	6	-	-	-
2-29-12		FIELD DIMENSIONS	-	MW

PROJECT :
CHOC HOSPITAL
TOWER II
455 S. MAIN STREET
ORANGE, CALIFORNIA 92868

ITEM #: 2-105,2-107
FLOOR : LEVEL 2
ROOM #: 2.074, 2.076
ITEM : TOPS & CABINETS
REF : A9.0, A3.2G

CONTRACTOR :
McCARTHY

ARCHITECT :
FKP

COPYRIGHT
ALL IDEAS DESIGNS, ARRANGEMENTS AND PLANS INDICATED OR REPRESENTED BY THIS DRAWING ARE OWNED BY, AND THE PROPERTY OF P.A.M. AND WERE CREATED,EVOLVED AND DEVELOPED FOR USE ON, AND IN CONNECTION WITH THE SPECIFIED PROJECT. NONE OF SUCH IDEAS, DESIGNS, ARRANGEMENT OF PLANS SHALL BE USED BY OR DISCLOSED TO ANY PERSON, FIRM OR CORPORATION FOR ANY PURPOSE WHATSOEVER WITHOUT THE WRITTEN PERMISSION OF P.A.M.

FIELD VERIFICATION
P.A.M. SHOP DRAWINGS ARE MADE FOR THE EXCLUSIVE USE OF P.A.M. AND ANY OTHER TRADES USING THESE DRAWING USE THEM AT THERE OWN RISK. DIMENSIONS ON THESE DRAWINGS MAY NOT BE ALWAYS NOTED. FIELD CONDITIONS MAY REQUIRE CHANGES IN DIMENSIONS, SO OTHER TRADES USING THESE DRAWINGS MUST TAKE THEIR OWN FIELD DIMENSIONS.

PACIFIC ARCHITECTURAL MILLWORK
104 LESLIE ST LA HABRA, CA. 90631
PH: (714) 525-2059 FAX: (714) 525-2073

DATE: 05-10-10	
DRAWN BY: JB	SCALE: NOTED
JOB: 3635	SUBMITTAL: 06
DWG: 2-12	

HARDWARE SCHEDULE

	ITEM	PART NO.	MANUF.	FINISH / COLOR
1	METAL WIRE PULL 4" CTC	MC402-4-A	EPCO	SATIN CLR. ANODIZED
2	BLUM HINGE PLATE	B173L810	BLUM	NICKLE PLATED
3	BLUM HINGE (INSERTA)	73T5590 F.O., S.C. , 120	BLUM	NICKLE PLATED
4	METAL SHELF SUPPORT	282.04.711	HAFELE	NICKLE PLATED
5				
6				
7				
8				
9				
10				

FINISH SCHEDULE

PL4 - PLASTIC LAMINATE - (CABINETS)
ABET LAMINATI 130 SEI

SEE SHEET B-1 FOR CABINET BACKING DETAILS

WHITE MELAMINE INTERIORS U.N.O.

DATE	NO	REVISION	SUB. #	BY
	1	X		
	2			
	3			
	4			
	5			
	6			

MCCARTHY APPROVAL

A. Approved as noted for Architectural Review ☐
B. Review and Resubmit ☐
C. Rejected ☐

This review is for general conformance with Plans and Specifications only. Any deviations from same not clearly noted by the Preparer have not been reviewed. Review shall not constitute a complete check of detailed dimensions or count to serve to relieve the Preparer of contractual responsibility for any error or deviation from contract requirements.

McCarthy

By _____ Date _____

SHOP DRAWING REFERENCE NO. _____

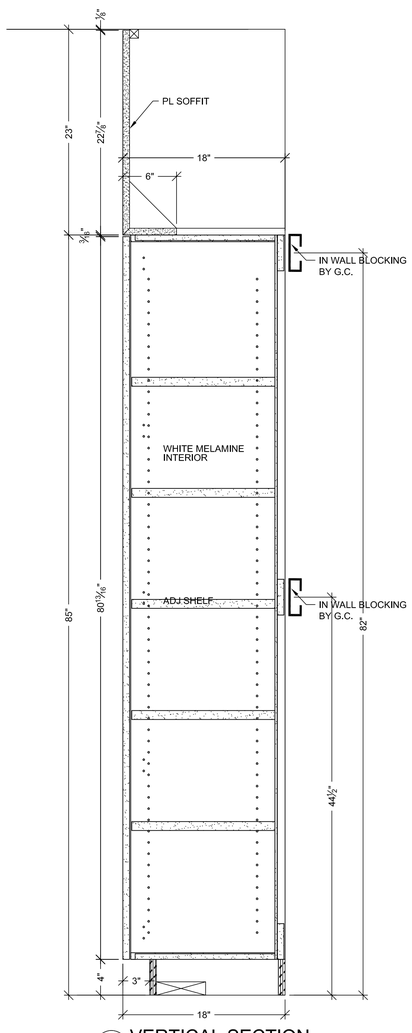

B VERTICAL SECTION
SCALE: 1 1/2" = 1'- 0"
ARCH. REF: A9.0

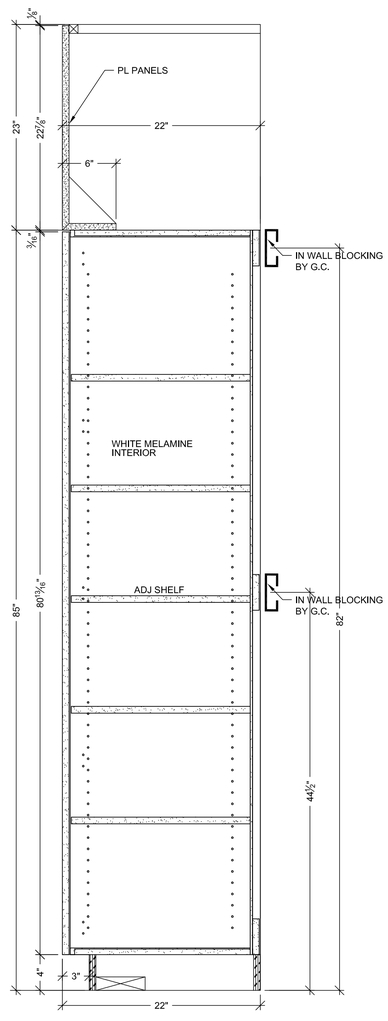

A VERTICAL SECTION
SCALE: 1 1/2" = 1'- 0"
ARCH. REF: A9.0

OMIT

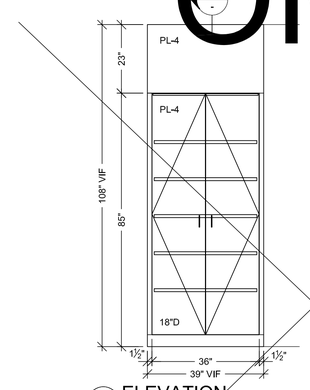

4 ELEVATION
SCALE: 1/2" = 1'- 0" ITEM: 2-116.2
ROOM: 2.037.09
ARCH. REF: A9.0

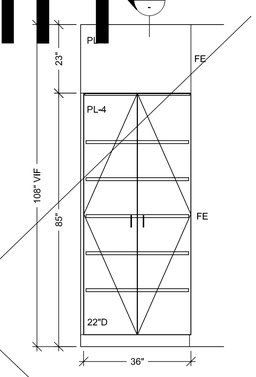

2 ELEVATION
SCALE: 1/2" = 1'- 0" ITEM: 2-117.1
ROOM: 2.026.03
ARCH. REF: A9.0

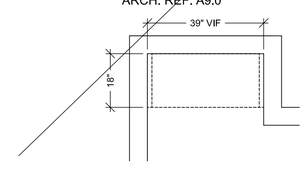

3 FLOOR PLAN
SCALE: 1/2" = 1'- 0" ITEM: 2-116.2
ROOM: 2.037.09
ARCH. REF: A3.2H

STORAGE GENERAL

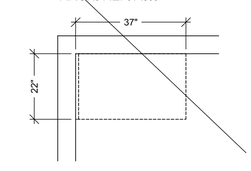

1 FLOOR PLAN
SCALE: 1/2" = 1'- 0" ITEM: 2-117.1
ROOM: 2.026.03
ARCH. REF: A3.2J

STAFF EXERCISE

RELEASE FOR PRODUCTION
SIGNATURE: _____
DATE: _____
NOTE: NO CHANGES CAN BE MADE AFTER AUTHORIZATION TO PROCEED.

PROJECT : CHOC HOSPITAL TOWER II
455 S. MAIN STREET
ORANGE, CALIFORNIA 92868

FLOOR : LEVEL 2
ROOM # : 2.026.03,2.037.09 ITEM # : 2-116.2,2-117.1
ITEM : CABINETS
REF : A9.0 A3.2H,A3.2J

CONTRACTOR : McCARTHY

ARCHITECT : FKP

COPYRIGHT
ALL IDEAS DESIGNS, ARRANGEMENTS AND PLANS INDICATED OR REPRESENTED BY THIS DRAWING ARE OWNED BY, AND THE PROPERTY OF PJ.AL AND WERE CREATED,EVOLVED AND DEVELOPED FOR USE ON, AND IN CONECTION WITH THE SPECIFIED PROJECT, NONE OF SUCH IDEAS, DESIGNS, ARRANGEMENT OF PLANS SHALL BE USED BY OR DISCLOSED TO ANY PERSON, FIRM OR CORPORATION FOR ANY PURPOSE WHATSOEVER WITHOUT THE WRITTEN PERMISSION OF P.J.AL.

FIELD VERIFICATION
P.J.AL SHOP DRAWINGS ARE MADE FOR THE EXCLUSIVE USE OF P.J.AL AND ANY OTHER TRADES USING THESE DRAWING USE THEM AT THERE OWN RISK. DIMENSIONS ON THESE DRAWINGS MAY NOT BE ALWAYS NOTED, FIELD CONDITIONS MAY REQUIRE CHANGES IN DIMENSIONS. SO OTHER TRADES USING THESE DRAWINGS MUST TAKE THEIR OWN FIELD DIMENSIONS.

PACIFIC ARCHITECTURAL MILLWORK
1041 LESLIE ST. LA HABRA, CA. 90631
PH: (714) 525-2093 FAX: (714) 525-2073

DATE: 05-10-10
DRAWN BY: JB SCALE: NOTED
JOB: 3635 SUBMITTAL: 06
DWG: 2-13

HARDWARE SCHEDULE

	ITEM	PART NO.	MANUF.	FINISH / COLOR
1	BALLET BAR & BRACKETS	16 FT. SINGLE ADJUST.	MATSMATSMATS	OAK / POL. CHROME
2				
3				
4				
5				
6				
7				
8				
9				
10				

FINISH SCHEDULE

MAPLE W/ CLR. FINISH 8

SEE SHEET B-1 FOR CABINET BACKING DETAILS

MCCARTHY APPROVAL

A. Approved as noted for Architectural Review ☐

B. Review and Resubmit ☐

C. Rejected ☐

This review is for general conformance with Plans and Specifications only. Any deviations from same not clearly noted by the Preparer have not been reviewed. Review shall not constitute a complete check of detailed dimensions or count to serve to relieve the Preparer of contractual responsibility for any error or deviation from contract requirements.

McCarthy

By _____ Date _____

SHOP DRAWING REFERENCE NO. _____

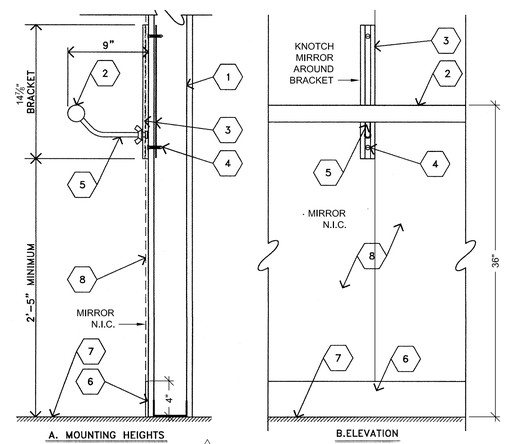

A. MOUNTING HEIGHTS

B.ELEVATION

1. ~~SCHED. PARTITION TYPE~~
2. BALLET BAR – ~~OAK~~ MAPLE ~~STAINED AND VARNISH FINISH VERIFY STAIN FINISH WITH OWNER.~~ W/ CLR. FINISH. 8
3. ~~ADJUSTABLE WALL CHANNEL~~ WITH BACKING PLATE (BY MANUFACTURER)
4. #12 SMS x 2"–SELF DRILLING SCREWS
5. BALLET BAR BRACKET–ADJUSTABLE
6. SCHEDULED BASE
7. FINISHED FLOOR LINE.
8. SCHEDULED WALL FINISH.

NOTE: GENERAL CONTRACTOR TO COORDINATE ALL PENITRATIONS THRU THE MIRROR WALL FINISH IF APPLICABLE

A VERTICAL SECTION
SCALE: FULL SIZE

OMIT

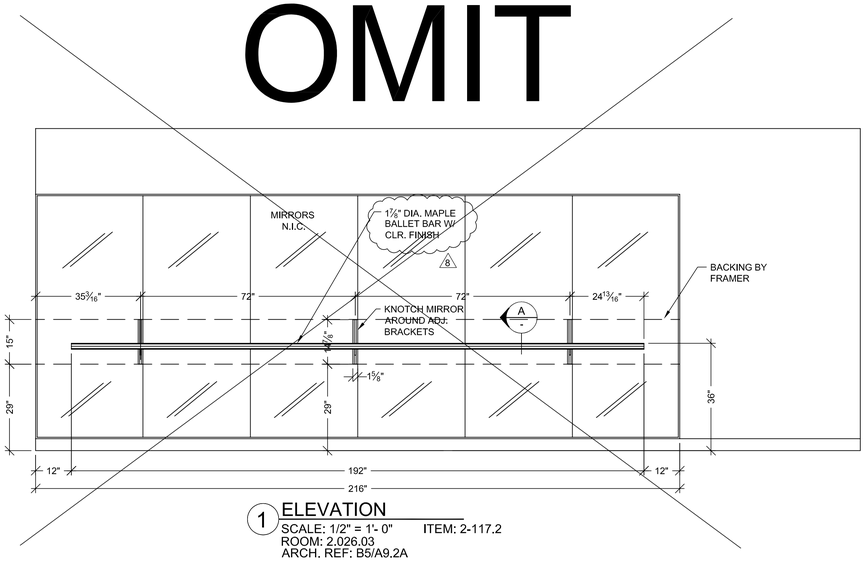

1 ELEVATION
SCALE: 1/2" = 1'- 0" ITEM: 2-117.2
ROOM: 2.026.03
ARCH. REF: B5/A9.2A

NO	DATE	REVISION	DSB. #	BY
1	–	X	–	X
2	–		–	
3	–		–	
4	–		–	
5	–		–	
6	2-15-11	PER R.L.C. DATED 1-20-11	–	JB

PROJECT :
CHOC HOSPITAL
TOWER II
455 S. MAIN STREET
ORANGE, CALIFORNIA 92868

FLOOR : LEVEL 2
ROOM # : 2.026.03
ITEM : BALLET BAR
REF : A9.2A ,A3.2J
ITEM #: 2-117.2

ARCHITECT :
FKP

CONTRACTOR :
McCARTHY

COPYRIGHT
ALL IDEAS DESIGNS, ARRANGEMENTS AND PLANS INDICATED OR REPRESENTED BY THIS DRAWING ARE OWNED BY, AND THE PROPERTY OF P.A.M. AND WERE CREATED,EVOLVED AND DEVELOPED FOR USE ON, AND IN CONNECTION WITH, THE SPECIFIED PROJECT. NONE OF SUCH IDEAS, DESIGNS, ARRANGEMENT OF PLANS SHALL BE USED BY OR DISCLOSED TO ANY PERSON, FIRM OR CORPORATION FOR ANY PURPOSE WHATSOEVER WITHOUT THE WRITTEN PERMISSION OF P.A.M.

FIELD VERIFICATION

P.A.M. SHOP DRAWINGS ARE MADE FOR THE EXCLUSIVE USE OF P.A.M. AND ANY OTHER TRADES USING THESE DRAWING USE THEM AT THERE OWN RISK. DIMENSIONS MUST BE VERIFIED AND ADJUSTED AS NOTED. FIELD CONDITIONS MAY REQUIRE CHANGES IN DIMENSIONS, SO OTHER TRADES USING THESE DRAWINGS MUST TAKE THEIR OWN FIELD DIMENSIONS.

PACIFIC ARCHITECTURAL MILLWORK
104 LESLIE ST.,LA HABRA, CA. 90631
PH: (714) 526-2659 FAX: (714) 526-2673

DATE: 12-21-10
DRAWN BY: JB
SCALE: NOTED
JOB: 3635
SUBMITTAL: 19
DWG: 2-13.1

RELEASE FOR PRODUCTION
SIGNATURE: _____
DATE: _____
NOTE: NO CHANGES CAN BE MADE AFTER AUTHORIZATION TO PROCEED.

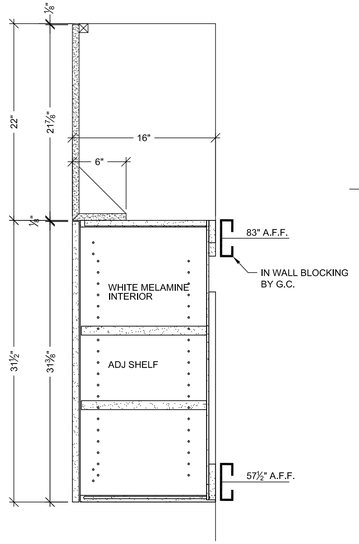

A VERTICAL SECTION
SCALE: 1 1/2" = 1'- 0"
ARCH. REF: A9.0

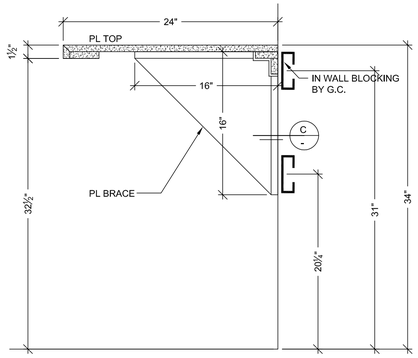

B VERTICAL SECTION
SCALE: 1 1/2" = 1'- 0"
ARCH. REF: A9.0

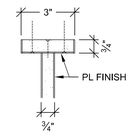

C PLAN SECTION
SCALE: 3" = 1'- 0"
ARCH. REF: A9.0

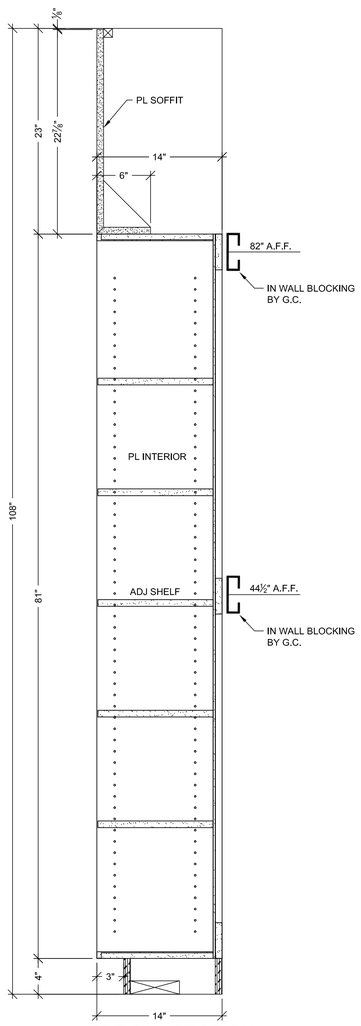

D VERTICAL SECTION
SCALE: 1 1/2" = 1'- 0"
ARCH. REF: A9.0

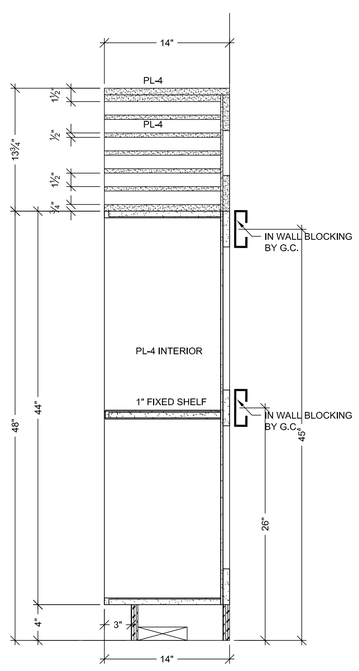

E VERTICAL SECTION
SCALE: 1 1/2" = 1'- 0"
ARCH. REF: A9.0

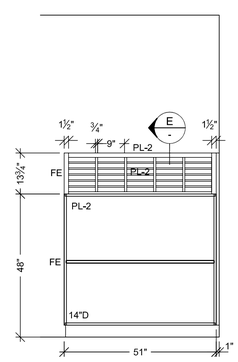

6 FLOOR PLAN
SCALE: 1/2" = 1'- 0" ITEM: 2-110.1
ROOM: 2.084
ARCH. REF: A9.0

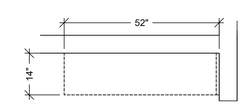

5 ELEVATION
SCALE: 1/2" = 1'- 0" ITEM: 2-110.1
ROOM: 2-084
ARCH. REF: A3.2G

WORKROOM CHILD LIFE

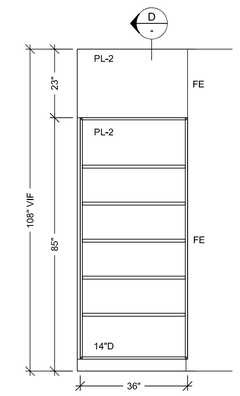

4 FLOOR PLAN
SCALE: 1/2" = 1'- 0" ITEM: 2-110
ROOM: 2.084.00.C
ARCH. REF: A9.0

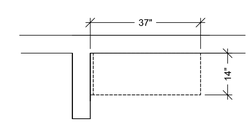

3 ELEVATION
SCALE: 1/2" = 1'- 0" ITEM: 2-110
ROOM: 2-084.00.C
ARCH. REF: A3.2G

WORKROOM

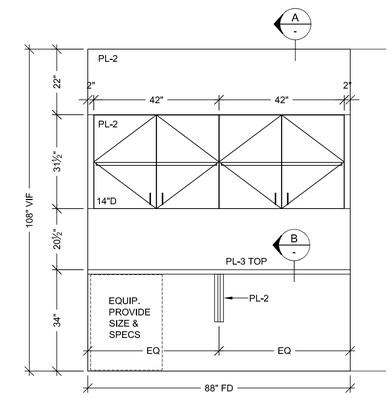

2 FLOOR PLAN
SCALE: 1/2" = 1'- 0" ITEM: 2-109
ROOM: 2.084.00.C
ARCH. REF: A9.0

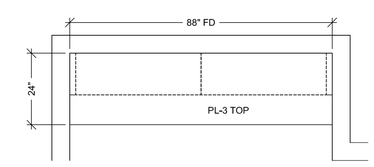

1 ELEVATION
SCALE: 1/2" = 1'- 0" ITEM: 2-109
ROOM: 2-084.00.C
ARCH. REF: A3.2G

WORKROOM

HARDWARE SCHEDULE

	ITEM	PART NO.	MANUF.	FINISH / COLOR
1	METAL WIRE PULL 4" CTC	MC402-4-A	EPCO	SATIN CLR. ANODIZED
2	BLUM HINGE PLATE	B173L810	BLUM	NICKLE PLATED
3	BLUM HINGE (INSERTA)	73T5590 F.O., S.C. , 120	BLUM	NICKLE PLATED
4	METAL SHELF SUPPORT	282.04.711	HAFELE	NICKLE PLATED
5				
6				
7				
8				
9				
10				

FINISH SCHEDULE

2 PL 3 - PLASTIC LAMINATE - (TOPS)
FORMICA 300-58 SAIL WHITE OXIDE MATTE

2 PL 2 - PLASTIC LAMINATE - (CABINETS)
FORMICA 7012-58 AMBER MAPLE MATTE

PLEASE VERIFY THESE FINISHES.

SEE SHEET B-1 FOR CABINET BACKING DETAILS

WHITE MELAMINE INTERIORS U.N.O.

MCCARTHY APPROVAL

A. Approved as noted for Architectural Review ☐
B. Review and Resubmit ☐
C. Rejected ☐

This review is for general conformance with Plans and Specifications only. Any deviations from same not clearly noted by the Preparer have not been reviewed. Review shall not constitute a complete check of detailed dimensions or count to serve to relieve the Preparer of contractual responsibility for any error or deviation from contract requirements.

McCarthy

By _____ Date _____
SHOP DRAWING REFERENCE NO. _____

DATE	NO	REVISION	SUB. #	BY
–	–	X	–	X
10-06-10	2	PER R.L.C. DATED 9-14-10	–	JB
–	3		–	
–	4		–	
–	5		–	
2-28-12	6	FIELD DIMENSIONS	–	MW

PROJECT :
CHOC HOSPITAL
TOWER II
455 S. MAIN STREET
ORANGE, CALIFORNIA 92868

FLOOR : LEVEL 2
ROOM # : 2.084.00.C,2.084 ITEM # : 2-109,2-110,2-110.1
ITEM : TOPS & CABINETS
REF : A9.0, A3.2G

ARCHITECT :
FKP

CONTRACTOR :
McCARTHY

COPYRIGHT
ALL IDEAS DESIGNS, ARRANGEMENTS AND PLANS INDICATED OR REPRESENTED BY THIS DRAWING ARE OWNED BY, AND THE PROPERTY OF PJ.AI. AND WERE CREATED,EVOLVED AND DEVELOPED FOR USE ON, AND IN CONNECTION WITH THE SPECIFIED PROJECT. NONE OF SUCH IDEAS, DESIGNS, ARRANGEMENT OF PLANS SHALL BE USED BY OR DISCLOSED TO ANY PERSON, FIRM OR CORPORATION FOR ANY PURPOSE WHATSOEVER WITHOUT THE WRITTEN PERMISSION OF P.J.A.I.

FIELD VERIFICATION

P.J.A.I. SHOP DRAWINGS ARE MADE FOR THE EXCLUSIVE USE OF P.J.A.I. AND ANY OTHER TRADES USING THESE DRAWING USE THEM AT THEIR OWN RISK. DIMENSIONS ON THESE DRAWINGS MAY NOT BE ALWAYS NOTED, FIELD CONDITIONS MAY REQUIRE CHANGES IN DIMENSIONS, SO OTHER TRADES USING THESE DRAWINGS MUST TAKE THEIR OWN FIELD DIMENSIONS.

PACIFIC
ARCHITECTURAL MILLWORK
1041 LESLIE ST. LA HABRA, CA. 90631
PH: (714) 525-2003 FAX: (714) 525-2073

DATE: 05-10-10
DRAWN BY: JB SCALE: NOTED
JOB: 3635 SUBMITTAL: 06
DWG: 2-14

RELEASE FOR PRODUCTION
SIGNATURE: _____
DATE: _____
NOTE: NO CHANGES CAN BE MADE AFTER AUTHORIZATION TO PROCEED.

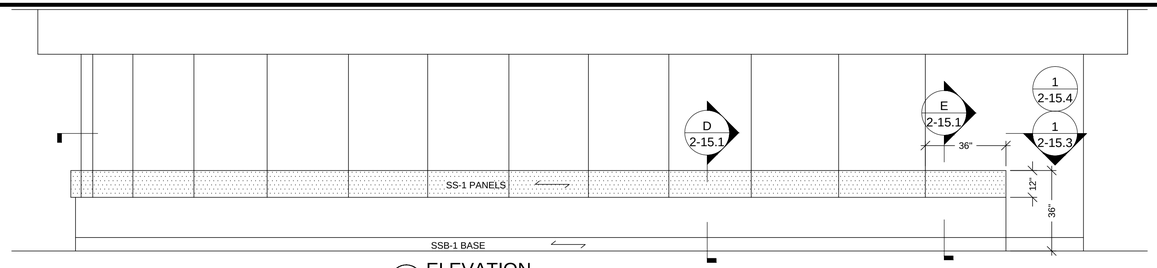

2 ELEVATION
SCALE: 3/8"=12" ROOM: 2.113.00.C
REF: E3/A9.2A ITEM: 2-111

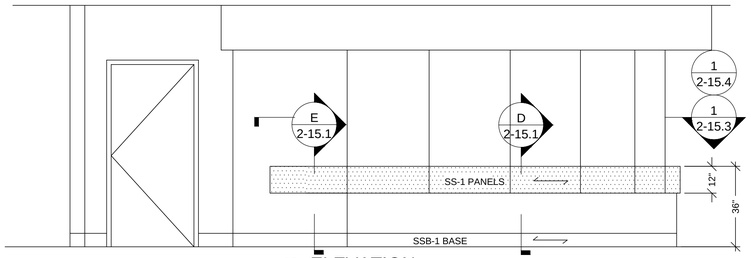

3 ELEVATION
SCALE: 3/8"=12" ROOM: 2.113.00.C
REF: D4/A9.2A ITEM: 2-111

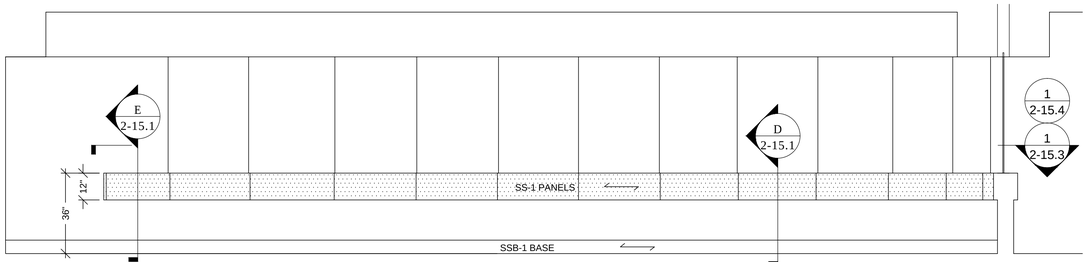

4 ELEVATION
SCALE: 3/8"=12" ROOM: 2.075
REF: NONE ITEM: 2-111

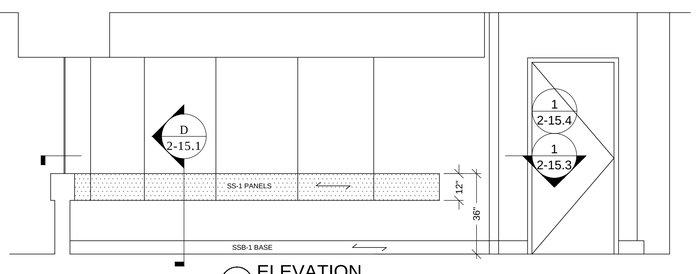

5 ELEVATION
SCALE: 3/8"=12" ROOM: 2.075
REF: B5/A9.2A ITEM: 2-111

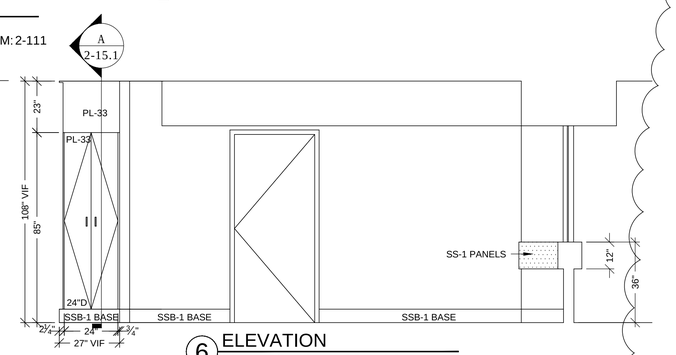

6 ELEVATION
SCALE: 3/8"=12" ROOM: 2.075
REF: B3/A9.2A ITEM: 2-111

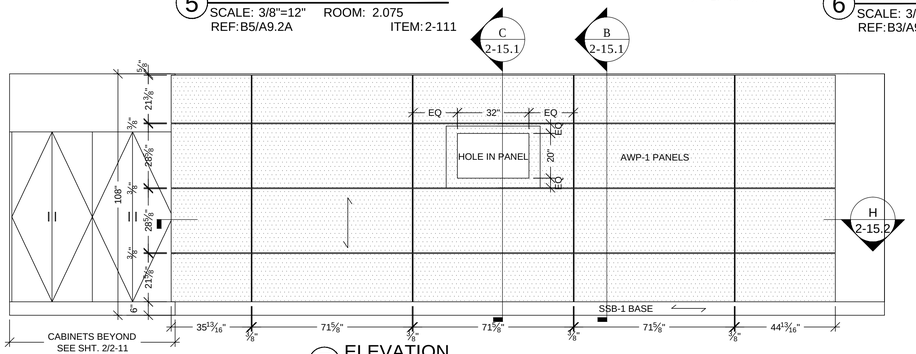

7 ELEVATION
SCALE: 3/8"=12" ROOM: 2.075
REF: E6/A9.2A ITEM: 2-111

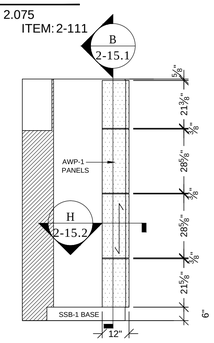

8 ELEVATION
SCALE: 3/8"=12" ROOM: 2.075
REF: B4/A9.2A ITEM: 2-111

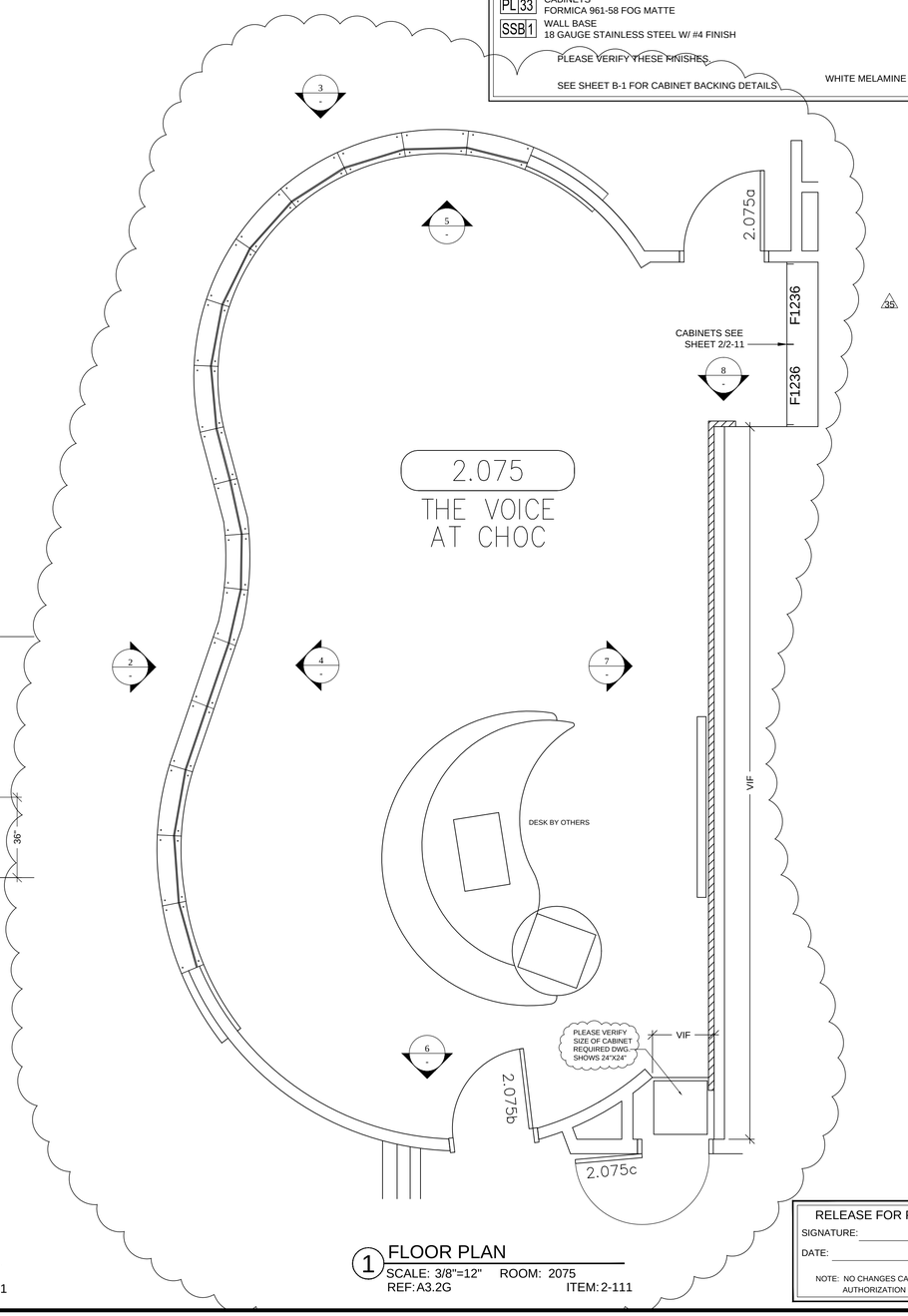

1 FLOOR PLAN
SCALE: 3/8"=12" ROOM: 2075
REF: A3.2G ITEM: 2-111

MCCARTHY APPROVAL

A. Approved as noted for Architectural Review ☐
B. Review and Resubmit ☐
C. Rejected ☐

This review is for general conformance with Plans and Specifications only. Any deviations from same not clearly noted by the Preparer have not been reviewed. Review shall not constitute a complete check of detailed dimensions or count to serve to relieve the Preparer of contractual responsibility for any error or deviation from contract requirements.

McCarthy

By _____ Date _____

SHOP DRAWING REFERENCE NO. _____

HARDWARE SCHEDULE

	ITEM	PART NO.	MANUF.	FINISH / COLOR
1	Z-CLIPS	MF 375-2"	MONARCH	ALUMINUM
2	Z-CLIPS	MF 375-72"	MONARCH	ALUMINUM
3	METAL WIRE PULL 4" CTC	MC402-4-A	EPCO	SATIN CLR. ANODIZED
4	BLUM HINGE PLATE	B173L810	BLUM	NICKLE PLATED
5	BLUM HINGE (INSERTA)	73T5590 F.O., S.C. , 120	BLUM	NICKLE PLATED
6	TAMPER RESIST. SCREWS	94063A546	MCMASTER	STAINLESS STEEL
7	T-NUTS	90975A055	MCMASTER	ZINC PLATED
8				
9				
10				

FINISH SCHEDULE

SS 1 — WALL PANELS
CHEMETAL #710 BRUSHED STAINLESS STEEL

AWP 1 — WALL PANELS: RULON ALURATONE 300 W/ EDGE BANDING
MAPLE VENEER FINISH, 20% SHEEN CLR. FINISH, CLASS 1 FLAME SPREAD RATING

PL 33 — CABINETS
FORMICA 961-58 FOG MATTE

SSB 1 — WALL BASE
18 GAUGE STAINLESS STEEL W/ #4 FINISH

PLEASE VERIFY THESE FINISHES.

SEE SHEET B-1 FOR CABINET BACKING DETAILS

WHITE MELAMINE INTERIORS U.N.O.

DATE	NO	REVISION	SUB #	BY
1-16-12	2	PER C.O. #232 DATED 10-10-11	38	JB
3-9-12	3	FIELD DIMENSIONS	–	JB
4-10-12	4	PER RFI # 5431-0 DATED 3-9-12	–	JB
–	5	–	–	–
–	6	–	–	–

PROJECT :
CHOC HOSPITAL
TOWER II
455 S. MAIN STREET
ORANGE, CALIFORNIA 92868

FLOOR : LEVEL 2
ROOM # : 2.075, 2.113.00.C ITEM #: 2-111
ITEM : WALL PANELS, CABINETS
REF : A9.2A,A10.4,A3.2G

CONTRACTOR :
McCARTHY

ARCHITECT :
FKP

COPYRIGHT
ALL IDEAS DESIGNS, ARRANGEMENTS AND PLANS INDICATED OR REPRESENTED BY THIS DRAWING ARE OWNED BY, AND THE PROPERTY OF P.A.M. AND WERE CREATED,EVOLVED AND DEVELOPED FOR USE ON, AND IN CONNECTION WITH THE SPECIFIED PROJECT. NONE OF SUCH IDEAS, DESIGNS, ARRANGEMENTS OR PLANS SHALL BE USED BY OR DISCLOSED TO ANY PERSON, FIRM OR CORPORATION FOR ANY PURPOSE WHATSOEVER WITHOUT THE WRITTEN PERMISSION OF P.A.M.

FIELD VERIFICATION
P.A.M. SHOP DRAWINGS ARE MADE FOR THE EXCLUSIVE USE OF P.A.M. AND ANY OTHER TRADES USING THESE DRAWING USE THEM AT THERE OWN RISK. DIMENSIONS ON THESE DRAWINGS MAY NOT BE ALWAYS NOTED, THERE MAY BE SOME DIFFERENCE IN FIELD DIMENSIONS, SO OTHER TRADES USING THESE DRAWINGS MUST TAKE THEIR OWN FIELD DIMENSIONS.

PACIFIC ARCHITECTURAL MILLWORK
1041 LESLIE ST. LA HABRA, CA. 90631
PH: (714) 525-2059 FAX: (714) 525-2673

DATE: 05-10-10
DRAWN BY: JB SCALE: NOTED
JOB: 3635 SUBMITTAL: 06
DWG: 2-15

RELEASE FOR PRODUCTION
SIGNATURE: _____
DATE: _____
NOTE: NO CHANGES CAN BE MADE AFTER AUTHORIZATION TO PROCEED.

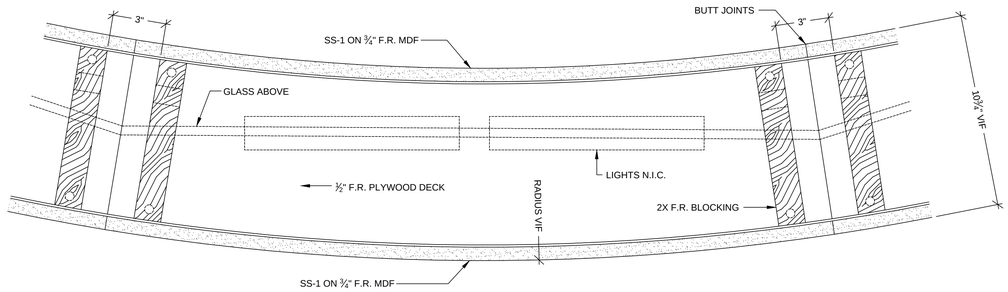

G PLAN SECTION
SCALE: 3"=12"
REF: C6/A10.4

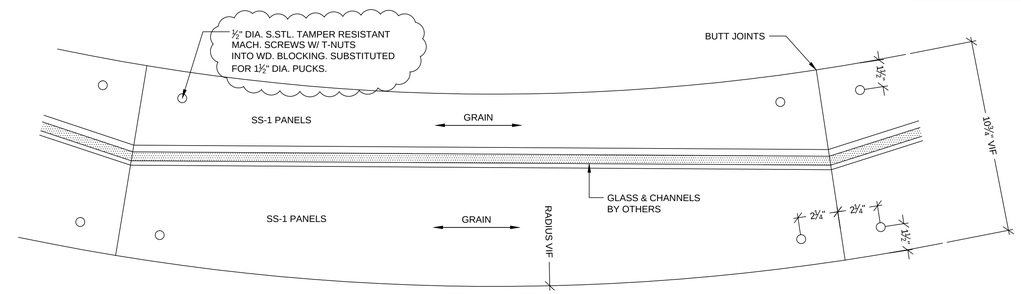

F PLAN SECTION
SCALE: 3"=12"
REF: C6/A10.4

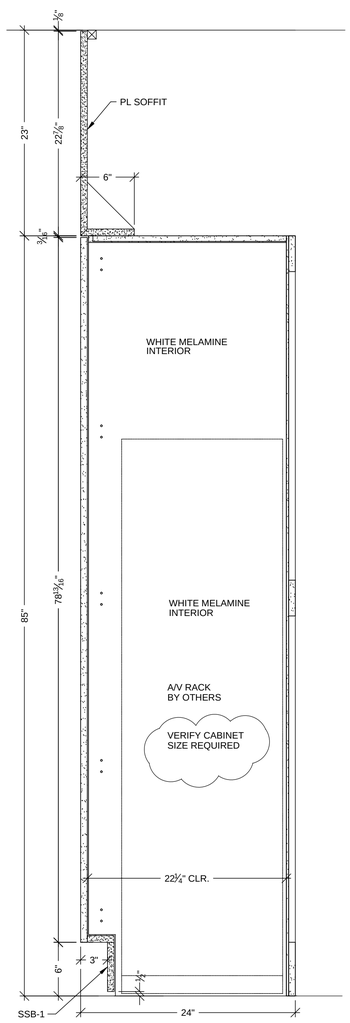

A VERTICAL SECTION
SCALE: 1 1/2" = 1'- 0"
ARCH. REF: A9.0

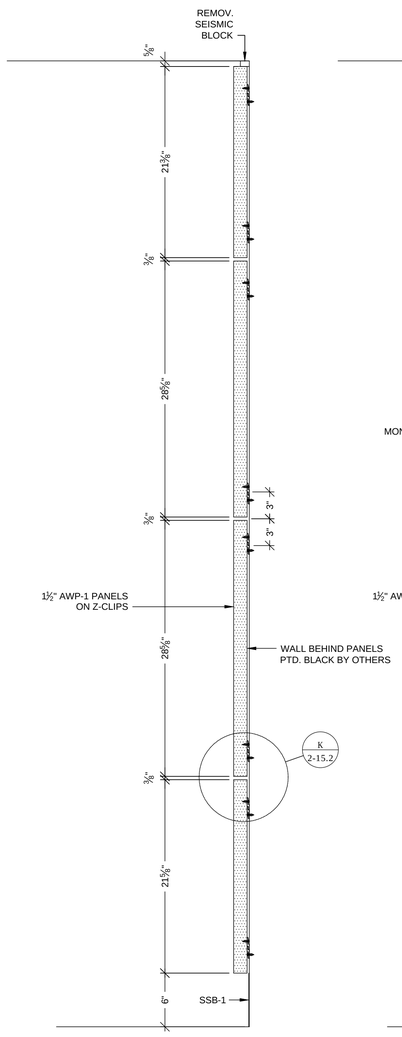

B VERTICAL SECTION
SCALE: 1 1/2" = 1'- 0"
ARCH. REF: A9.0

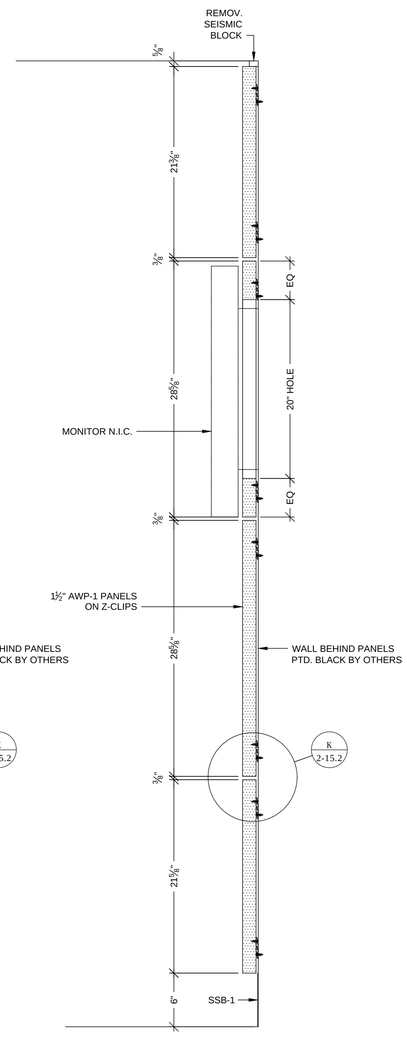

C VERTICAL SECTION
SCALE: 1 1/2" = 1'- 0"
ARCH. REF: A9.0

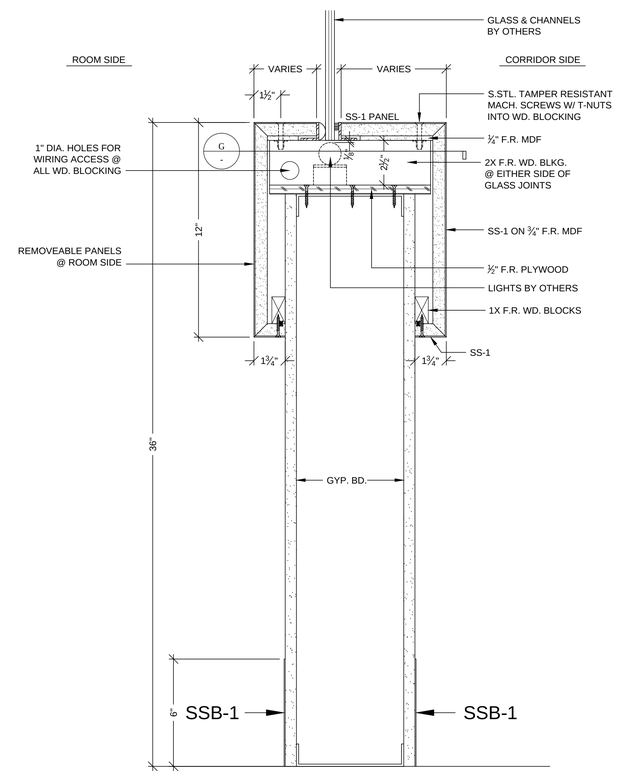

D SECTION
SCALE: 3"=12"
REF: E3/A10.4

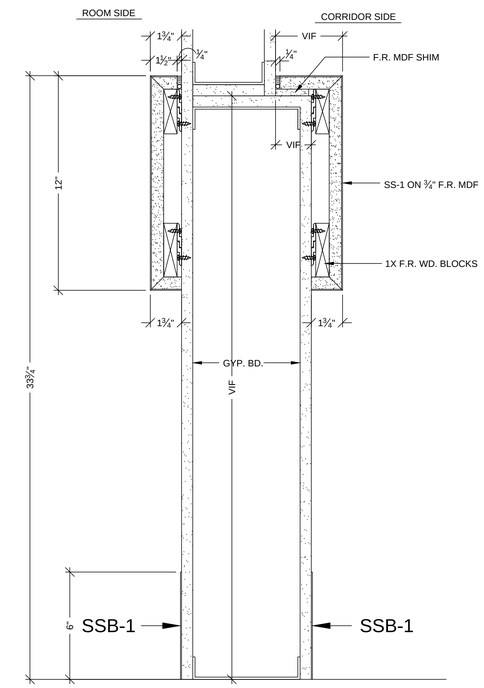

E SECTION
SCALE: 3"=12"
REF: D2/A10.4

MCCARTHY APPROVAL

A. Approved as noted for Architectural Review ☐
B. Review and Resubmit ☐
C. Rejected ☐

This review is for general conformance with Plans and Specifications only. Any deviations from same not clearly noted by the Preparer have not been reviewed. Review shall not constitute a complete check of detailed dimensions or count to serve to relieve the Preparer of contractual responsibility for any error or deviation from contract requirements.

McCarthy

By _____ Date _____

SHOP DRAWING REFERENCE NO. _____

DATE	NO	REVISION	SHEET #	BY
1-16-12	1	PER C.O. #232 DATED 10-10-11	38	JB
	2			
	3			
	4			
	5			
	6			

PROJECT : CHOC HOSPITAL TOWER II
455 S. MAIN STREET ORANGE, CALIFORNIA 92868

FLOOR : LEVEL 2
ROOM # : 2.075, 2.113.00.C ITEM # 2-111
ITEM : WALL PANELS, CABINETS
REF : A9.2A,A10.4,A3.2G

CONTRACTOR : McCARTHY
ARCHITECT : FKP

COPYRIGHT
ALL IDEAS DESIGNS, ARRANGEMENTS AND PLANS INDICATED OR REPRESENTED BY THIS DRAWING ARE OWNED BY, AND THE PROPERTY OF P.A.M. AND WERE CREATED, EVOLVED AND DEVELOPED FOR USE ON AND IN CONNECTION WITH THE SPECIFIED PROJECT. NONE OF SUCH IDEAS, DESIGNS, ARRANGEMENT OF PLANS SHALL BE USED BY OR DISCLOSED TO ANY PERSON, FIRM OR CORPORATION FOR ANY PURPOSE WHATSOEVER WITHOUT THE WRITTEN PERMISSION OF P.A.M.

FIELD VERIFICATION
P.A.M. SHOP DRAWINGS ARE MADE FOR THE EXCLUSIVE USE OF P.A.M. AND ANY OTHER TRADES USING THESE DRAWINGS. THE ACCURACY OF DIMENSIONS SHOWN ON THESE DRAWINGS MAY NOT BE ALWAYS NOTED. FIELD CONDITIONS MAY REQUIRE CHANGES IN DIMENSIONS. SO OTHER TRADES USING THESE DRAWINGS MUST TAKE THEIR OWN FIELD DIMENSIONS.

PACIFIC ARCHITECTURAL MILLWORK
1041 LESLIE ST. LA HABRA, CA. 90631
PH: (714) 525-2059 FAX: (714) 525-2673

DATE: 05-10-10
DRAWN BY: JB | SCALE: NOTED
JOB: 3635 | SUBMITTAL: XX
DWG: 2-15.1

RELEASE FOR PRODUCTION
SIGNATURE: _____
DATE: _____
NOTE: NO CHANGES CAN BE MADE AFTER AUTHORIZATION TO PROCEED.

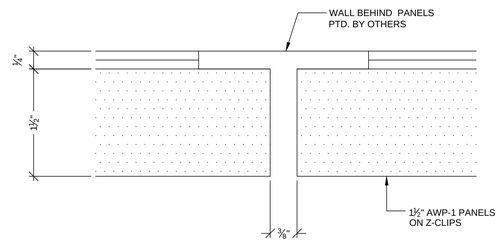

J DETAIL
SCALE: FULL
REF:B6/A10.4

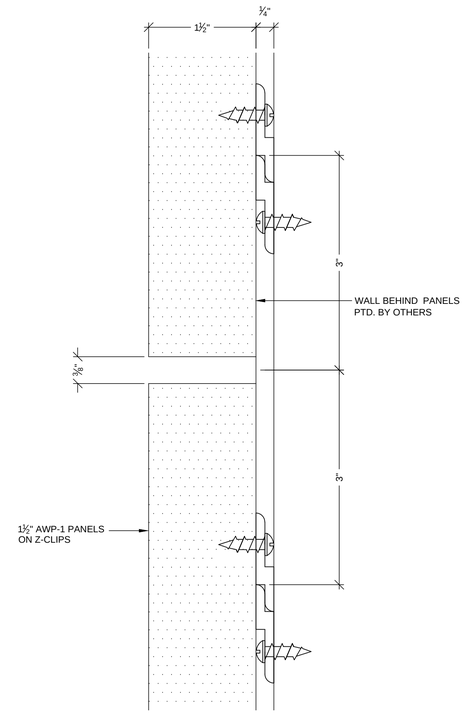

K DETAIL
SCALE: FULL
REF:B6/A10.4

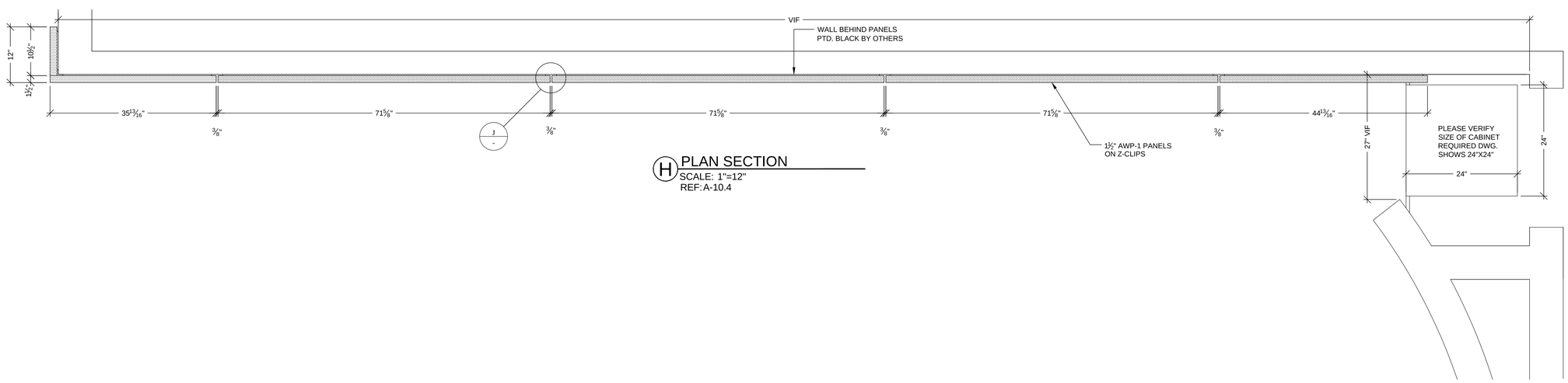

H PLAN SECTION
SCALE: 1"=12"
REF:A-10.4

MCCARTHY APPROVAL

A. Approved as noted for Architectural Review ☐
B. Review and Resubmit ☐
C. Rejected ☐

This review is for general conformance with Plans and Specifications only. Any deviations from same not clearly noted by the Preparer have not been reviewed. Review shall not constitute a complete check of detailed dimensions or count to serve to relieve the Preparer of contractual responsibility for any error or deviation from contract requirements.

McCarthy

By _____ Date _____

SHOP DRAWING REFERENCE NO. _____

DATE	NO	REVISION	SHEET #	BY
1-16-12	1	PER C.O. #232 DATED 10-10-11	38	JB
	2			
	3			
	4			
	5			
	6			

PROJECT :
CHOC HOSPITAL
TOWER II
455 S. MAIN STREET
ORANGE, CALIFORNIA 92868

FLOOR : LEVEL 2
ROOM # : 2.075, 2.113.00.C ITEM # : 2-111
ITEM : WALL PANELS, CABINETS
REF : A9.2A,A10.4,A3.2G

ARCHITECT :
FKP

CONTRACTOR :
McCARTHY

COPYRIGHT
ALL IDEAS DESIGNS, ARRANGEMENTS AND PLANS INDICATED OR REPRESENTED BY THIS DRAWING ARE OWNED BY, AND THE PROPERTY OF P.A.M. AND WERE CREATED,EVOLVED AND DEVELOPED FOR USE ON, AND SPECIFIC TO, THIS PROJECT AND PREMISES. NONE OF SUCH IDEAS, DESIGNS, ARRANGEMENT OF PLANS SHALL BE USED BY OR DISCLOSED TO ANY PERSON, FIRM OR CORPORATION FOR ANY PURPOSE WHATSOEVER WITHOUT THE WRITTEN PERMISSION OF P.A.M.

FIELD VERIFICATION
P.A.M. SHOP DRAWINGS ARE MADE FOR THE EXCLUSIVE USE OF P.A.M. AND ANY OTHER TRADES USING THESE DRAWING USE THEM AT THERE OWN RISK. DIMENSIONS MUST BE VERIFIED AND ADJUSTED AS REQUIRED. FIELD CONDITIONS MAY REQUIRE CHANGES IN DIMENSIONS, SO OTHER TRADES USING THESE DRAWINGS MUST TAKE THEIR OWN FIELD DIMENSIONS.

PACIFIC ARCHITECTURAL MILLWORK
104 LESLIE ST. LA HABRA, CA. 90631
PH: (714) 525-2059 FAX: (714) 525-2673

DATE: 05-10-10
DRAWN BY: JB
SCALE: NOTED
JOB: 3635
SUBMITTAL: 06
DWG: 2-15.2

RELEASE FOR PRODUCTION
SIGNATURE: _____
DATE: _____
NOTE: NO CHANGES CAN BE MADE AFTER AUTHORIZATION TO PROCEED.

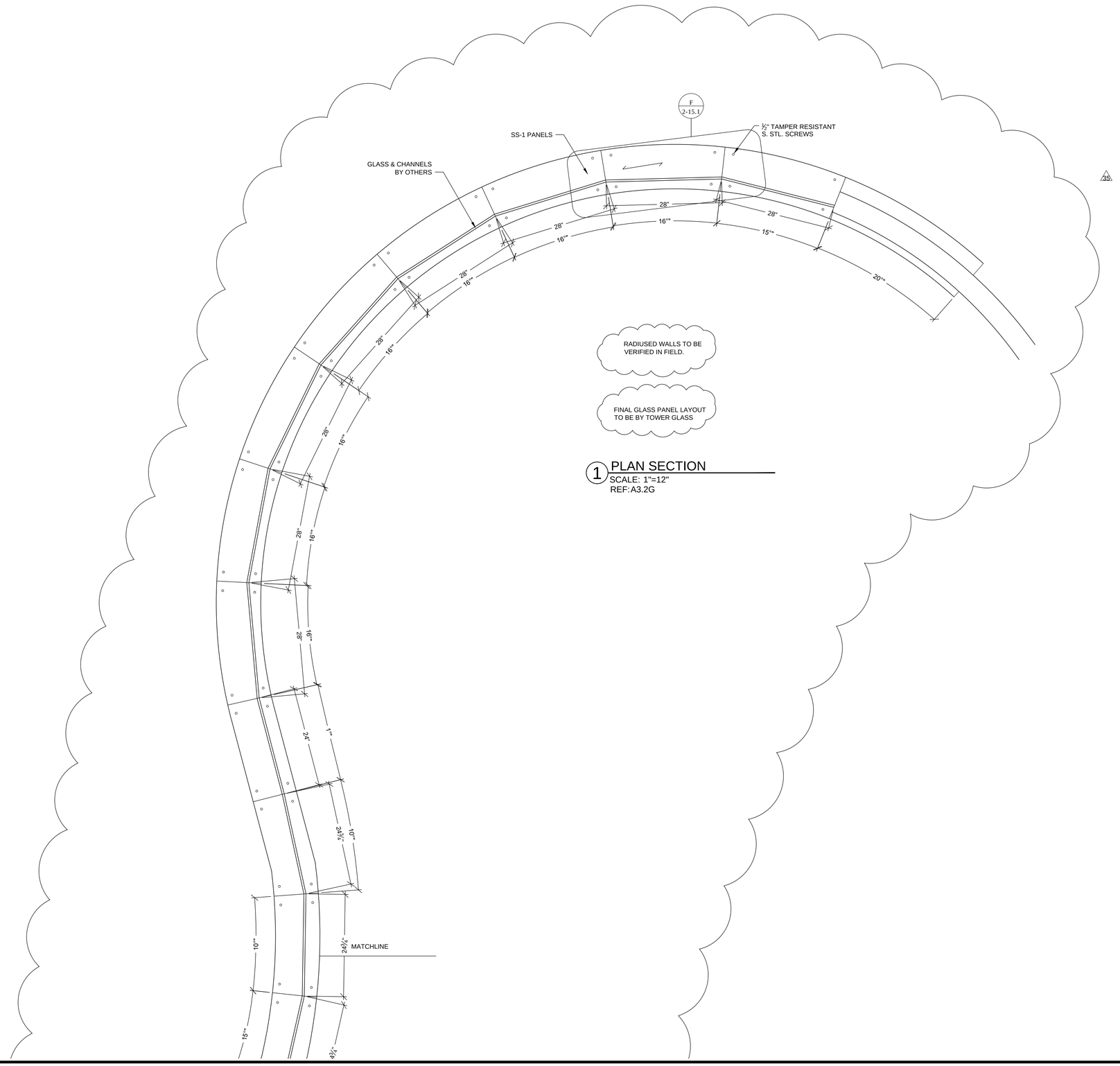

1 PLAN SECTION
SCALE: 1"=12"
REF:A3.2G

MCCARTHY APPROVAL

A. Approved as noted for Architectural Review ☐
B. Review and Resubmit ☐
C. Rejected ☐

This review is for general conformance with Plans and Specifications only. Any deviations from same not clearly noted by the Preparer have not been reviewed. Review shall not constitute a complete check of detailed dimensions or count to serve to relieve the Preparer of contractual responsibility for any error or deviation from contract requirements.

McCarthy

By _____ Date _____

SHOP DRAWING REFERENCE NO. _____

DATE	NO	REVISION	SHEE #	BY
1-16-12	2	PER C.O. #232 DATED 10-10-11	39	JB
3-9-12	3	FIELD DIMENSIONS	-	JB
4-10-12	4	PER RFI # 5431-0 DATED 3-9-12	-	JB
-	5	-	-	-
-	6	-	-	-

PROJECT :
CHOC HOSPITAL
TOWER II
455 S. MAIN STREET
ORANGE, CALIFORNIA 92868

FLOOR : LEVEL 2
ROOM # : 2.075, 2.113.00.C ITEM # 2-111
ITEM : WALL PANELS, CABINETS
REF : A9.2A,A10.4,A3.2G

ARCHITECT :
FKP

CONTRACTOR :
McCARTHY

COPYRIGHT
ALL IDEAS DESIGNS, ARRANGEMENTS AND PLANS INDICATED OR REPRESENTED BY THIS DRAWING ARE OWNED BY, AND THE PROPERTY OF P.A.M. AND WERE CREATED, EVOLVED AND DEVELOPED FOR USE ON, AND IN CONNECTION WITH THE SPECIFIED PROJECT. NONE OF SUCH IDEAS, DESIGNS, ARRANGEMENT OF PLANS SHALL BE USED BY OR DISCLOSED TO ANY PERSON, FIRM OR CORPORATION FOR ANY PURPOSE WHATSOEVER WITHOUT THE WRITTEN PERMISSION OF P.A.M.

FIELD VERIFICATION

P.A.M. SHOP DRAWINGS ARE MADE FOR THE EXCLUSIVE USE OF P.A.M. AND ANY OTHER TRADES USING THESE DRAWINGS USE THEM AT THERE OWN RISK. DIMENSIONS FIELD CONDITIONS MAY NOT BE ALWAYS NOTED, FIELD CONDITIONS MAY VARY FROM THESE DIMENSIONS, SO OTHER TRADES USING THESE DRAWINGS MUST TAKE THEIR OWN FIELD DIMENSIONS.

PACIFIC
ARCHITECTURAL MILLWORK
1041 LESLIE ST. LA HABRA, CA. 90631
PH: (714) 525-2059 FAX: (714) 525-2673

DATE: 05-10-10
DRAWN BY: JB
SCALE: NOTED
JOB: 3635
SUBMITTAL: 06
DWG: 2-15.3

RELEASE FOR PRODUCTION
SIGNATURE: _____
DATE: _____
NOTE: NO CHANGES CAN BE MADE AFTER AUTHORIZATION TO PROCEED.

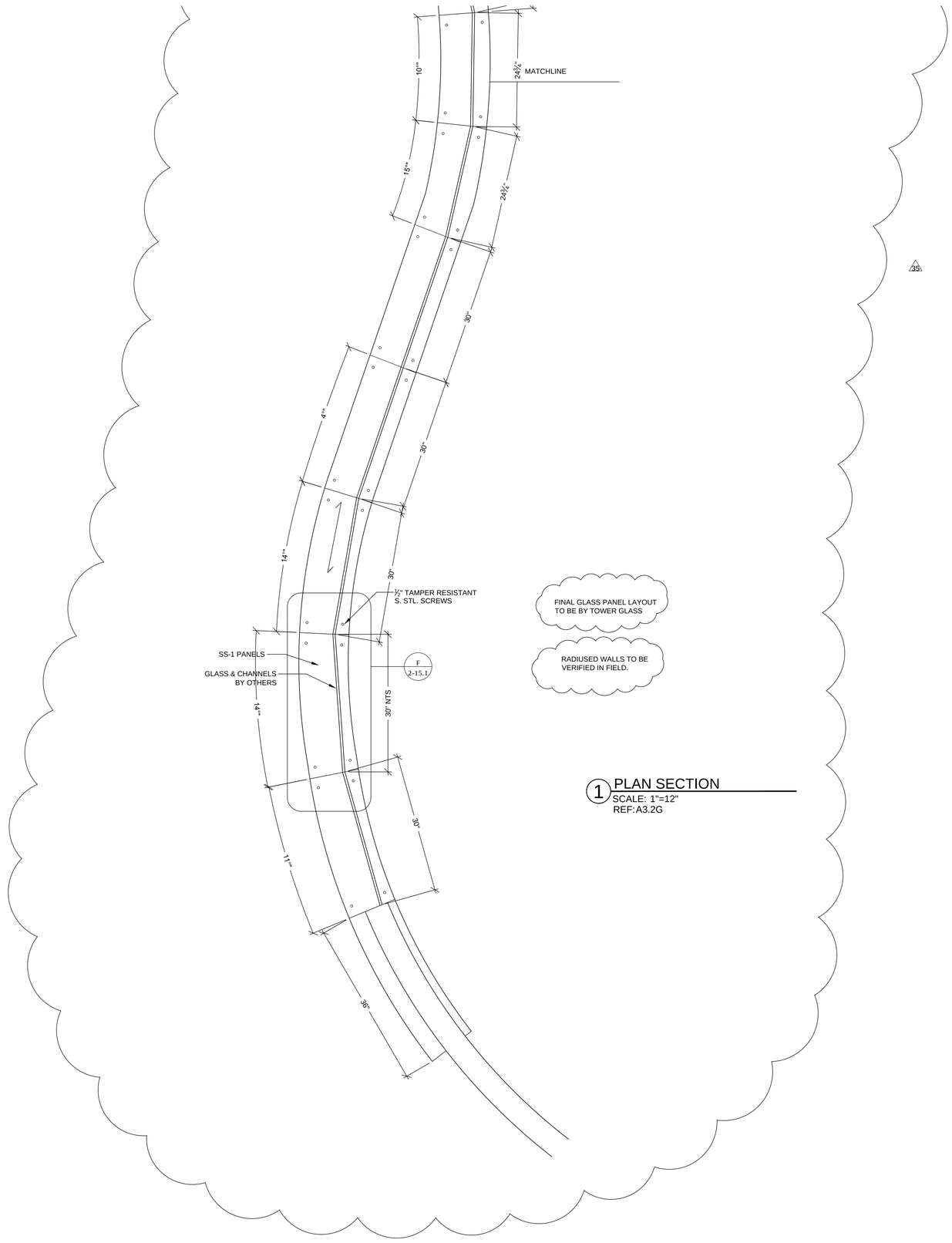

1 PLAN SECTION
SCALE: 1"=12"
REF:A3.2G

MCCARTHY APPROVAL

A. Approved as noted for Architectural Review ☐
B. Review and Resubmit ☐
C. Rejected ☐

This review is for general conformance with Plans and Specifications only. Any deviations from same not clearly noted by the Preparer have not been reviewed. Review shall not constitute a complete check of detailed dimensions or count to serve to relieve the Preparer of contractual responsibility for any error or deviation from contract requirements.

McCarthy

By _____ Date _____

SHOP DRAWING REFERENCE NO. _____

DATE	NO	REVISION	SHEET #	BY
1-16-12	2	PER C.O. #232 DATED 10-10-11	38	JB
3-9-12	3	FIELD DIMENSIONS		JB
4-10-12	4	PER RFI # 5431-0 DATED 3-9-12		JB
	5			
	6			

PROJECT :
CHOC HOSPITAL
TOWER II
455 S. MAIN STREET
ORANGE, CALIFORNIA 92868

FLOOR : LEVEL 2
ROOM # : 2.075, 2.113.00.C ITEM #: 2-111
ITEM : WALL PANELS, CABINETS
REF : A9.2A,A10.4,A3.2G

ARCHITECT :
FKP

CONTRACTOR :
McCARTHY

COPYRIGHT
ALL IDEAS,DESIGNS, ARRANGEMENTS AND PLANS INDICATED OR REPRESENTED BY THIS DRAWING ARE OWNED BY, AND THE PROPERTY OF P.A.M. AND WERE CREATED,EVOLVED AND DEVELOPED FOR USE ON, AND IN CONECTION WITH THE SPECIFIED PROJECT. NONE OF SUCH IDEAS, DESIGNS, ARRANGEMENT OF PLANS MAY BE USED BY ANY PERSON, FIRM OR CORPORATION FOR ANY PURPOSE WHATSOEVER WITHOUT THE WRITTEN PERMISSION OF P.A.M.

FIELD VERIFICATION

P.A.M. SHOP DRAWINGS ARE MADE FOR THE EXCLUSIVE USE OF P.A.M. AND ANY OTHER TRADES USING THESE DRAWING USE THEM AT THERE OWN RISK. DIMENSIONS ON THESE DRAWINGS MAY NOT BE ALWAYS NOTED, FIELD CONDITIONS MAY REQUIRE CHANGES IN DIMENSIONS, SO OTHER TRADES USING THESE DRAWINGS MUST TAKE THEIR OWN FIELD DIMENSIONS.

PACIFIC
ARCHITECTURAL MILLWORK
1041 LESLIE ST. LA HABRA, CA. 90631
PH: (714) 525-2059 FAX: (714) 525-2673

DATE: 05-10-10	
DRAWN BY: JB	SCALE: NOTED
JOB: 3635	SUBMITTAL: 06
DWG: 2-15.4	

RELEASE FOR PRODUCTION

SIGNATURE: _____

DATE: _____

NOTE: NO CHANGES CAN BE MADE AFTER AUTHORIZATION TO PROCEED.

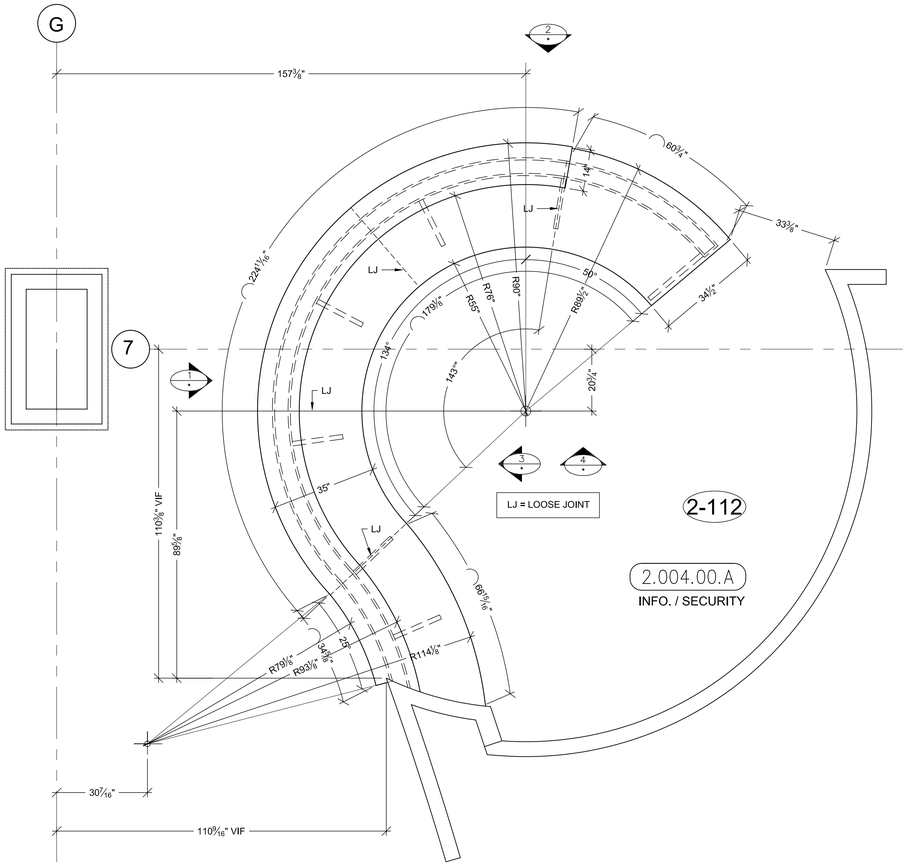

A PLAN VIEW @ COUNTER TOPS

SCALE: 1/2"=1'-0"
ARCH. REF: A3.2H

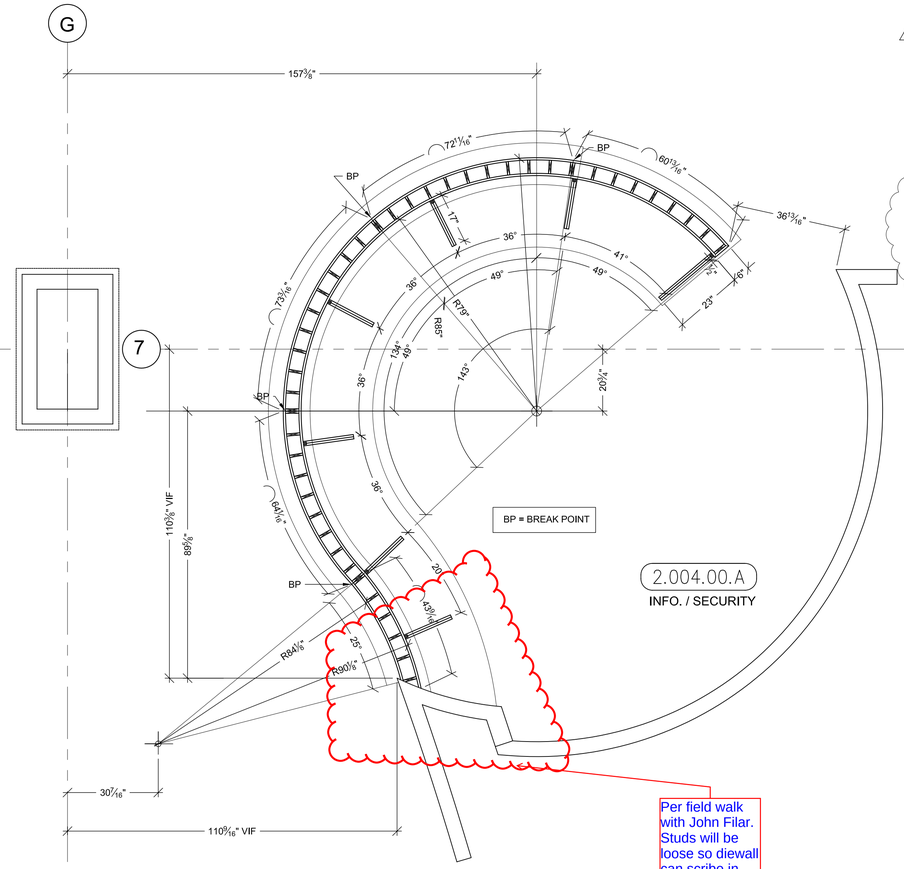

Per field walk with John Filar. Studs will be loose so diewall can scribe in sculpted wall

B PLAN SECTION @ DIE WALL & SUPPORTS

SCALE: 1/2"=1'-0"
ARCH. REF: A3.2H

HARDWARE SCHEDULE

	ITEM	PART NO.	MANUF.	FINISH / COLOR
1	GROMMETS	EDP3-93D	MOCKETT	DESERT SAND
2				
3				

FINISH SCHEDULE

RES 9 - 3 FORM, SERIES: CHROMA ? FF: RENEWABLE MATTE
BF: REF. COLOR

SSM 6 - SOLID SURFACE - (WORK TOP/DIE WALL)
LG HI-MACS ARTIC WHITE S06 MATTE

PL 1 - PLASTIC LAMINATE - (EXT, DIE WALL)
WILSONART 10745-60 FONTHILL PEAR MATTE

PL 4 - PLASTIC LAMINATE - (INT DIE WALL / SUPPORTS)
ABET LAMINATI 130 SEI

STAINLESS STEEL BASE : 18 GA. BRUSHED #4 FINISH

MCCARTHY APPROVAL

A. Approved as noted for Architectural Review ☐
B. Review and Resubmit ☐
C. Rejected ☐

This review is for general conformance with Plans and Specifications only. Any deviations from same not clearly noted by the Preparer have not been reviewed. Review shall not constitute a complete check of detailed dimensions or count to serve to relieve the Preparer of contractual responsibility for any error or deviation from contract requirements.

McCarthy

By _____ Date _____

SHOP DRAWING REFERENCE NO. _____

Per field walk with John Filar. Die wall finishes need to cope into sculpted wall. Leave a partial section of finishes off and add 12" for scribing into sculpted wall.

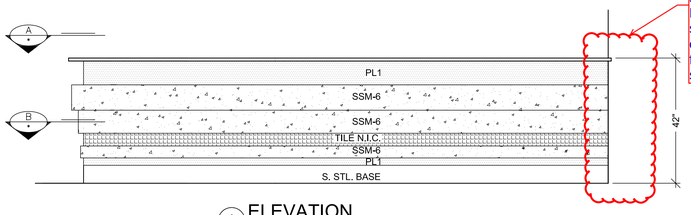

1 ELEVATION

SCALE: 1/2"=1'-0" ITEM: 2-112
ROOM: INFO. / SECURITY
ARCH. REF: NONE

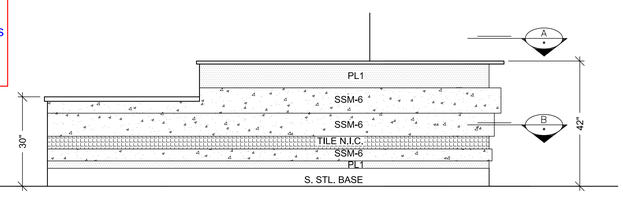

2 ELEVATION

SCALE: 1/2"=1'-0" ITEM: 2-112
ROOM: INFO. / SECURITY
ARCH. REF: C2/A9.2B

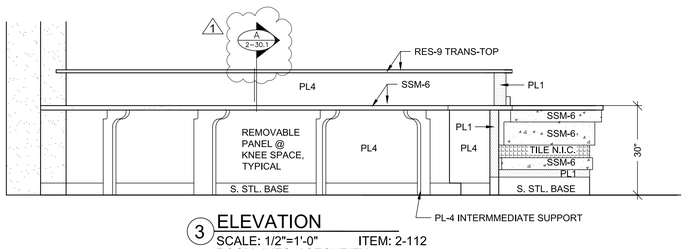

3 ELEVATION

SCALE: 1/2"=1'-0" ITEM: 2-112
ROOM: INFO. / SECURITY
ARCH. REF: NONE

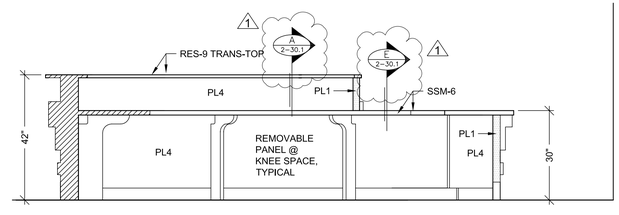

4 ELEVATION

SCALE: 1/2"=1'-0" ITEM: 2-112
ROOM: INFO. / SECURITY
ARCH. REF: NONE

ON-HOLD

RELEASE FOR PRODUCTION

SIGNATURE: _____

DATE: _____

NOTE: NO CHANGES CAN BE MADE AFTER AUTHORIZATION TO PROCEED.

NO	DATE	REVISION	SUB. #	BY
1	8-13-10	PER RFI #1484-0 DATED 5-19-10	-	JB
2	10-06-10	PER R.L.C. DATED 9-14-10	-	JB
3	-	-	-	
4	-	-	-	
5	-	-	-	
6	-	-	-	

PROJECT : CHOC HOSPITAL TOWER II
455 S. MAIN STREET
ORANGE, CA. 92868

FLOOR : SECOND FLOOR
ROOM # : 2.004.00.A. INFO. / SECURITY DESK
ITEM : 2-112
REF : B6/A3.2H

CONTRACTOR : McCARTHY

ARCHITECT : FKP ARCHITECTS

COPYRIGHT
ALL IDEAS DESIGNS, ARRANGEMENTS AND PLANS INDICATED OR REPRESENTED BY THIS DRAWING ARE OWNED BY, AND THE PROPERTY OF P.A.M. AND WERE CREATED,EVOLVED AND DEVELOPED FOR USE ON, AND IN CONNECTION WITH THE SPECIFIED PROJECT. NONE OF SUCH IDEAS, DESIGNS, ARRANGEMENT OF PLANS SHALL BE USED BY OR DISCLOSED TO ANY PERSON FIRM OR CORPORATION FOR ANY PURPOSE WHATSOEVER WITHOUT THE WRITTEN PERMISSION OF P.A.M.

FIELD VERIFICATION
P.A.M. SHOP DRAWINGS ARE MADE FOR THE EXCLUSIVE USE OF P.A.M. AND ANY OTHER TRADES USING THESE DRAWING USE THEM AT THERE OWN RISK. DIMENSIONS ON THESE DRAWINGS MAY NOT BE ALWAYS NOTED. FIELD CONDITIONS MAY REQUIRE CHANGES IN DIMENSIONS. SO OTHER TRADES USING THESE DRAWINGS MUST TAKE THEIR OWN FIELD DIMENSIONS.

PACIFIC ARCHITECTURAL MILLWORK
1041 LESLIE ST. LA HABRA, CA. 90631
PH: (714) 525-2093 FAX: (714) 525-2073

DATE: 05-10-10	
DRAWN BY: JND	SCALE: NOTED
JOB: 3635	SUBMITTAL: 06
DWG: 2-30	SHEET(S):

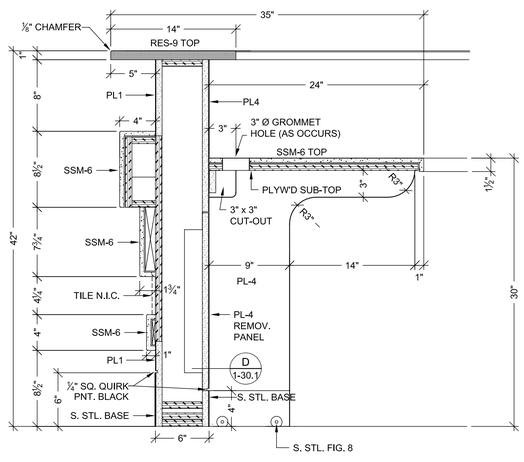

A VERTICAL SECTION
SCALE: 1 1/2"=1'-0"
ARCH. REF.: RFI #1319-0

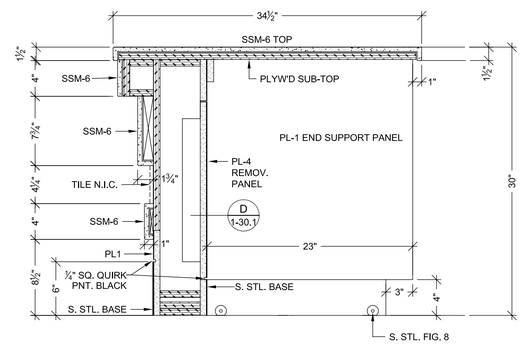

E VERTICAL SECTION
SCALE: 1 1/2"=1'-0"
ARCH. REF.: RFI #1319-0

MCCARTHY APPROVAL

A. Approved as noted for Architectural Review ☐

B. Review and Resubmit ☐

C. Rejected ☐

This review is for generall conformance with Plans and Specifications only. Any deviations from same not clearly noted by the Preparer have not been reviewed. Review shall not constitute a complete check of detailed dimensions or count to serve to relieve the Preparer of contractual responsibility for any error or deviation from contract requirements.

McCarthy

By _____ Date _____ _____

SHOP DRAWING REFERENCE NO. _____

RELEASE FOR PRODUCTION

SIGNATURE: _____

DATE: _____

NOTE: NO CHANGES CAN BE MADE AFTER AUTHORIZATION TO PROCEED.

DATE	NO	REVISION	SUB. #	BY
8-13-10	1	PER RFI #1484-0 DATED 5-19-10	--	JB
--	2		--	
--	3		--	
--	4		--	
--	5		--	
--	6		--	

PROJECT :
CHOC HOSPITAL
TOWER II
455 S. MAIN STREET
ORANGE, CA. 92868

FLOOR : SECOND FLOOR
ROOM # : 2.004.00.A. INFO. / SECURITY DESK
ITEM : 2-112
REF : B6/A3.2H

CONTRACTOR :
McCARTHY

ARCHITECT :
FKP ARCHITECTS

COPYRIGHT
ALL IDEAS DESIGNS, ARRANGEMENTS AND PLANS INDICATED OR REPRESENTED BY THIS DRAWING ARE THE PROPERTY OF PACIFIC MILLWORK AND WERE CREATED, EVOLVED AND DEVELOPED FOR USE ON AND IN CONECTION WITH THE SPECIFIED PROJECT. NONE OF SUCH IDEAS, DESIGNS, ARRANGEMENT OF PLANS SHALL BE USED BY OR DISCLOSED TO ANY PERSON, FIRM OR CORPORATION FOR ANY PURPOSE WHATSOEVER WITHOUT THE WRITTEN PERMISSION OF FAIR.

FIELD VERIFICATION
PJLM, SHOP DRAWINGS ARE MADE FOR THE EXCLUSIVE USE OF THE PARTIES TO THE CONTRACT WHO DRAW OR USE THEM AT THEIR OWN RISK. DIMENSIONS ON THESE DRAWINGS MAY NOT BE ALWAYS NOTED. FIELD CONDITIONS MAY REQUIRE CHANGES IN DIMENSIONS, SO OTHER TRADES USING THESE DRAWINGS MUST TAKE THEIR OWN FIELD DIMENSIONS.

PACIFIC
ARCHITECTURAL MILLWORK
704 LESLIE ST. LA HABRA, CA. 90631
PH: (714) 525-2033 FAX: (714) 525-2073

DATE: 10-08-10
DRAWN BY: JB
SCALE: NOTED
JOB: 3635
SUBMITTAL: 06
DWG: 2-30.1
SHEET(S):

HARDWARE SCHEDULE

	ITEM	PART NO.	MANUF.	FINISH / COLOR
1	GROMMETS	XG3-??	MOCKETT	PUTTY
2	METAL WIRE PULL 4" CTC	MC402-4-A	EPCO	SATIN CLR. ANODIZED
3	DRAWER SLIDES	AC7432-16	ACCURIDE	NICKEL PLATED
4	WOOD SHELF SUPPORTS	282.04.711	HAFELE	NICKEL PLATED
5	GLASS SHELF SUPPORTS	345 NP	KV	NICKEL PLATED
6	GLASS SHELF CUSHION	129	KV	RUBBER
7	SLIDING DOOR TRACK	334 / 3334	EPCO	MILL ALUMINUM
8	SLIDING DOOR LOCK	300SD	OLYMPUS	SATIN CHROME
9				

FINISH SCHEDULE

SSM 1 - SOLID SURFACE TOP
AVONITE WHITE SANDS K1 6636

SSM 4 - SOLID SURFACE TRIM
AVONITE KOKOURA F19117

PL 1 - PLASTIC LAMINATE - (CABINETS,EXT. DIE WALL)
WILSONART 10745-60 FONTHILL PEAR MATTE

STAINLESS STEEL BASE : 18 GA. BRUSHED #4 FINISH

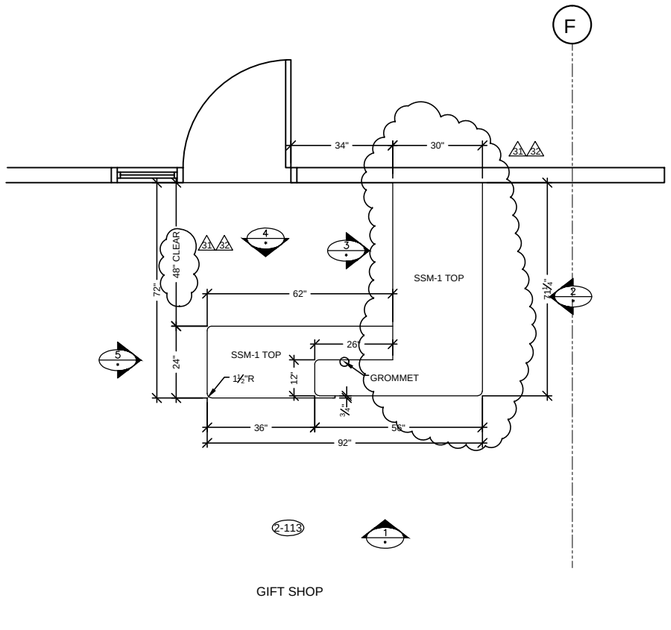

PLAN VIEW @ COUNTER

SCALE: 1/2"=1'-0"
ARCH. REF: B6/A3.2H (SIM.)

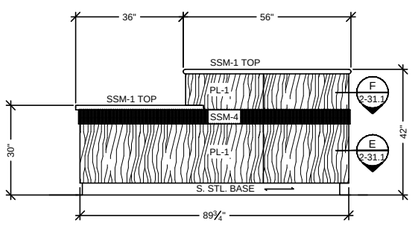

1 ELEVATION

SCALE: 1/2"=1'-0" ITEM: 2-113
ROOM: 2.009 GIFT SHOP
ARCH. REF: A3/A/A9.2A

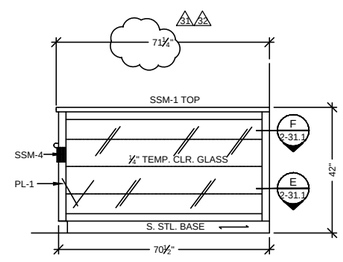

2 ELEVATION

SCALE: 1/2"=1'-0" ITEM: 2-113
ROOM: 2.009 GIFT SHOP
ARCH. A3/C/A9.2A

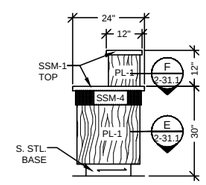

5 ELEVATION

SCALE: 1/2"=1'-0" ITEM: 2-113
ROOM: 2.009 GIFT SHOP
ARCH. REF: NONE

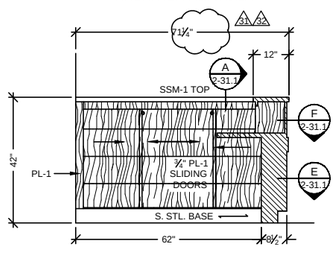

3 ELEVATION

SCALE: 1/2"=1'-0" ITEM: 2-113
ROOM: 2.009 GIFT SHOP
ARCH. REF: A3/D/A9.2A

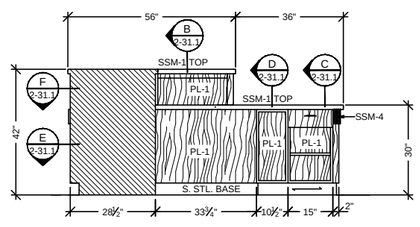

4 ELEVATION

SCALE: 1/2"=1'-0" ITEM: 2-113
ROOM: 2.009 GIFT SHOP
ARCH. REF: A3/B/A9.2A

DATE	NO	REVISION	BY	DB #
8-14-10	1	PER RFI #1484-0 DATED 5-19-10	JB	–
10-06-10	2	PER R.L.C. DATED 9-14-10	JB	34
12-2-11	3	PER C.O. 268 DATED 10-31-11	JB	–
2-13-12	4	PER R.L.C. DATED 12-19-11	JB	–
2-24-12	5	PER RFI 5299-0 DATED 2-21-12	JB	–
–	6	–	–	–

PROJECT :
CHOC HOSPITAL
TOWER II
455 S. MAIN STREET
ORANGE, CA. 92868

CONTRACTOR :
McCARTHY

FLOOR : SECOND FLOOR
ROOM # : 2.009, GIFT SHOP
ITEM : 2-113
REF : B6/A3.2H

ARCHITECT :
FKP ARCHITECTS

COPYRIGHT
ALL IDEAS DESIGNS, ARRANGEMENTS AND PLANS INDICATED OR REPRESENTED BY THIS DRAWING ARE OWNED BY, AND THE PROPERTY OF P.A.M. AND WERE CREATED,EVOLVED AND DEVELOPED FOR USE ON, AND IN CONNECTION WITH THE SPECIFIED PROJECT. NONE OF SUCH IDEAS, DESIGNS, ARRANGEMENT OF PLANS SHALL BE USED BY OR DISCLOSED TO ANY PERSON OR ENTERPRISE FOR ANY OTHER PURPOSE WHATSOEVER WITHOUT THE WRITTEN PERMISSION OF P.A.M.

FIELD VERIFICATION

P.A.M. SHOP DRAWINGS ARE MADE FOR THE EXCLUSIVE USE OF P.A.M. AND OTHER TRADES USING THESE DRAWING USE THEM AT THERE OWN RISK. DIMENSIONS ON THESE DRAWINGS MAY NOT BE ALWAY'S NOTED. FIELD CONDITIONS MAY REQUIRE CHANGES IN DIMENSIONS. SO OTHER TRADES USING THESE DRAWINGS MUST TAKE THEIR OWN FIELD DIMENSIONS.

PACIFIC ARCHITECTURAL MILLWORK
1041 LESLIE ST. LA HABRA, CA. 90631
PH: (714) 525-2059 FAX: (714) 525-2873

DATE: 05-10-10
DRAWN BY: JND SCALE: NOTED
JOB: 3635 SUBMITTAL: 06
DWG: 2-31
SHEET(S):

MCCARTHY APPROVAL

A. Approved as noted for Architectural Review ☐
B. Review and Resubmit ☐
C. Rejected ☐

This review is for general conformance with Plans and Specifications only. Any deviations from same not clearly noted by the Preparer have not been reviewed. Review shall not constitute a complete check of detailed dimensions or count to serve to relieve the Preparer of contractual responsibility for any error or deviation from contract requirements.

McCarthy

By _____ Date _____ _____

SHOP DRAWING REFERENCE NO. _____

RELEASE FOR PRODUCTION

SIGNATURE: _____

DATE: _____

NOTE: NO CHANGES CAN BE MADE AFTER AUTHORIZATION TO PROCEED.

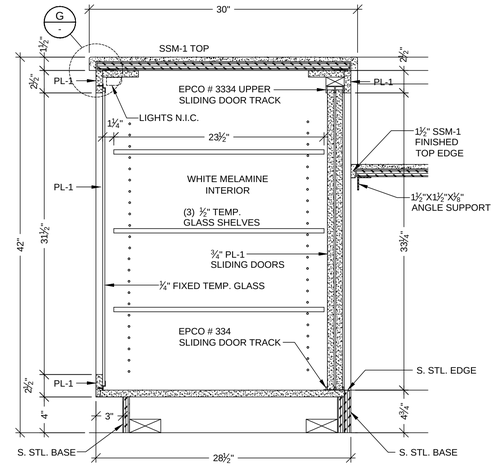

25 A VERTICAL SECTION
SCALE: 1 1/2"=1'-0"
ARCH. REF.: RFI #1319-0

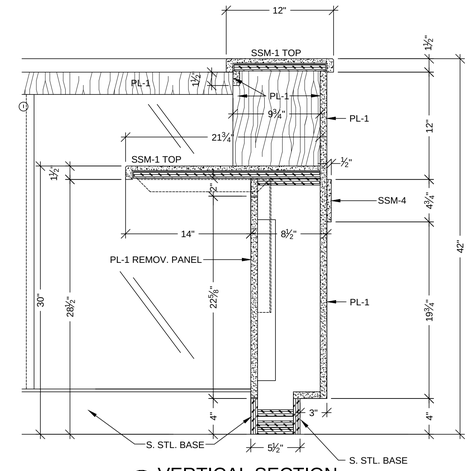

25 B VERTICAL SECTION
SCALE: 1 1/2"=1'-0"
ARCH. REF.: RFI #1319-0

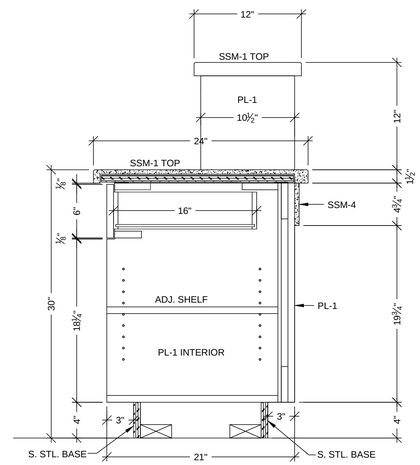

25 C VERTICAL SECTION
SCALE: 1 1/2"=1'-0"
ARCH. REF.: RFI #1319-0

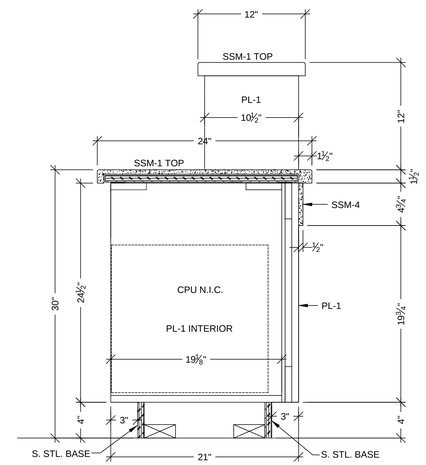

25 D VERTICAL SECTION
SCALE: 1 1/2"=1'-0"
ARCH. REF.: RFI #1319-0

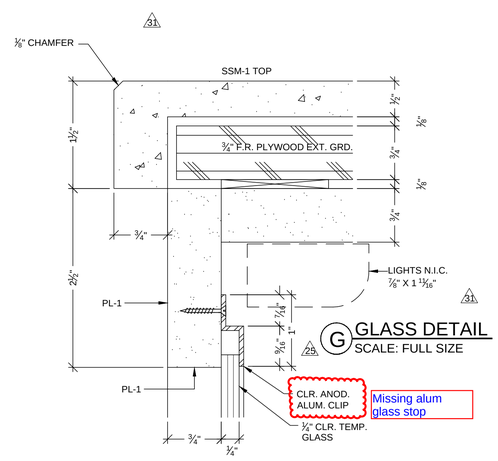

25 G GLASS DETAIL
SCALE: FULL SIZE

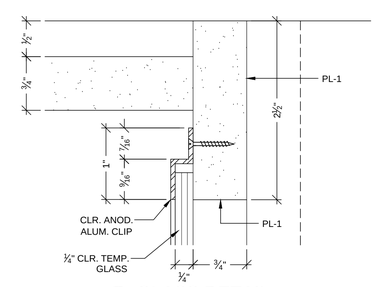

25 H GLASS DETAIL
SCALE: FULL SIZE

MCCARTHY APPROVAL

A. Approved as noted for Architectural Review ☐

B. Review and Resubmit ☐

C. Rejected ☐

This review is for general conformance with Plans and Specifications only. Any deviations from same not clearly noted by the Preparer have not been reviewed. Review shall not constitute a complete check of detailed dimensions or count to serve to relieve the Preparer of contractual responsibility for any error or deviation from contract requirements.

McCarthy

By _____ Date _____ _____

SHOP DRAWING REFERENCE NO. _____

DATE	NO	REVISION	SUB #	BY
8-14-10	1	PER RFI #1484-0 DATED 5-19-10	–	JB
12-2-11	2	PER C.O. 268 DATED 10-31-11	34	JB
2-13-12	3	PER R.L.C. DATED 12-19-11	–	JB
–	4		–	
–	5		–	
–	6		–	

PROJECT : CHOC HOSPITAL TOWER II
455 S. MAIN STREET
ORANGE, CA. 92868

FLOOR : FIRST FLOOR
ROOM # : GIFT SHOP DESK DETAILS
ITEM : 2-113
REF : B6/A3.2H

CONTRACTOR : McCARTHY

ARCHITECT : FKP ARCHITECTS

COPYRIGHT

ALL IDEAS DESIGNS, ARRANGEMENTS AND PLANS INDICATED OR REPRESENTED BY THIS DRAWING ARE OWNED BY, AND THE PROPERTY OF P.A.M. AND WERE CREATED,EVOLVED AND DEVELOPED FOR USE ON, AND IN CONNECTION WITH THE SPECIFIED PROJECT. NONE OF SUCH IDEAS DESIGNS, ARRANGEMENTS AND PLANS SHALL BE USED BY OR DISCLOSED TO ANY PERSON, FIRM OR CORPORATION FOR ANY PURPOSE WHATSOEVER WITHOUT THE WRITTEN PERMISSION OF P.A.M.

FIELD VERIFICATION

P.A.M. SHOP DRAWINGS ARE MADE FOR THE EXCLUSIVE USE OF P.A.M. AND ANY OTHER TRADES USING THESE DRAWING USE THEM AT THERE OWN RISK. DIMENSIONS ON THESE DRAWINGS MAY NOT BE ALWAYS NOTED, FIELD CONDITIONS MAY REQUIRE CHANGES IN DIMENSIONS, SO OTHER TRADES USING THESE DRAWINGS MUST TAKE THEIR OWN FIELD DIMENSIONS.

PACIFIC ARCHITECTURAL MILLWORK
1041 LESLIE ST. LA HABRA, CA. 90631
PH: (714) 525-2059 FAX: (714) 525-2673

DATE: 05-10-10
DRAWN BY: JND
SCALE: NOTED
JOB: 3635
SUBMITTAL: 06
DWG: 2-31.1
SHEET(S):

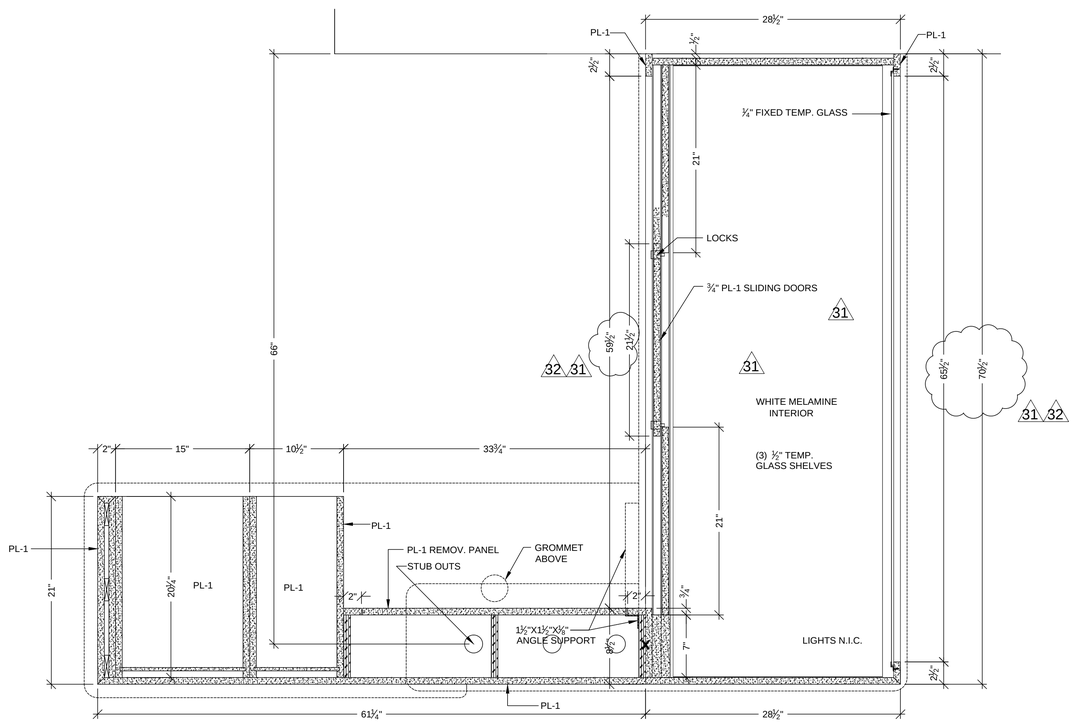

25 E PLAN SECTION
SCALE: 1 1/2"=1'-0"
ARCH. REF.: NONE

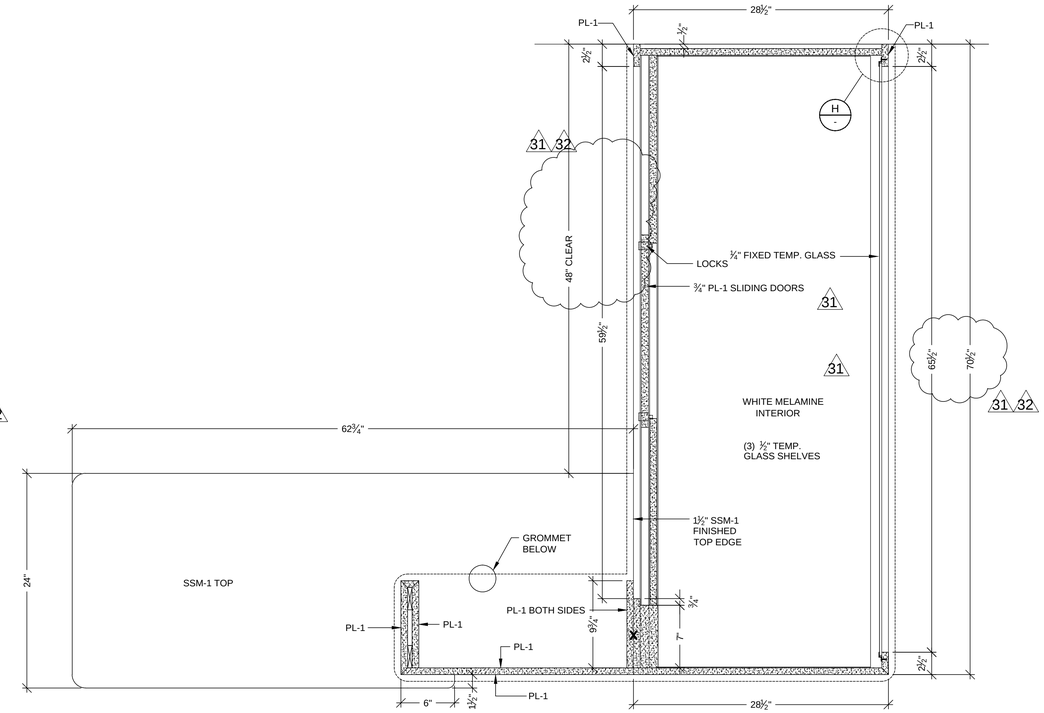

25 F PLAN SECTION
SCALE: 1 1/2"=1'-0"
ARCH. REF.: NONE

MCCARTHY APPROVAL

A. Approved as noted for Architectural Review ☐

B. Review and Resubmit ☐

C. Rejected ☐

This review is for general conformance with Plans and Specifications only. Any deviations from same not clearly noted by the Preparer have not been reviewed. Review shall not constitute a complete check of detailed dimensions or count to serve to relieve the Preparer of contractual responsibility for any error or deviation from contract requirements.

McCarthy

By _____Date_____ _____

SHOP DRAWING REFERENCE NO. _____

DATE	NO	REVISION	SUB #	BY
8-14-10	1	PER RFI #1484-0 DATED 5-19-10	—	JB
12-2-11	2	PER C.O. 268 DATED 10-31-11	34	JB
2-13-12	3	PER R.L.C. DATED 12-19-11	—	JB
2-24-12	4	PER RFI 5239-0 DATED 2-21-12	—	JB
—	5		—	
—	6		—	

PROJECT :
CHOC HOSPITAL
TOWER II
455 S. MAIN STREET
ORANGE, CA. 92868

FLOOR : FIRST FLOOR
ROOM # : GIFT SHOP DESK DETAILS
ITEM : 2-113
REF : B6/A3.2H

ARCHITECT :
FKP ARCHITECTS

CONTRACTOR :
McCARTHY

COPYRIGHT

ALL IDEAS DESIGNS, ARRANGEMENTS AND PLANS INDICATED OR REPRESENTED BY THIS DRAWING ARE OWNED BY, AND THE PROPERTY OF P.A.M. AND WERE CREATED,EVOLVED AND DEVELOPED FOR USE ON, AND IN CONECTION WITH THE SPECIFIED PROJECT. NONE OF SUCH IDEAS, DESIGNS, ARRANGEMENT OF PLANS SHALL BE USED BY OR DISCLOSED TO ANY PERSON OR ENTITY FOR ANY PURPOSE OR PURPOSE WHATSOEVER WITHOUT THE WRITTEN PERMISSION OF P.A.M.

FIELD VERIFICATION

P.A.M. SHOP DRAWINGS ARE MADE FOR THE EXCLUSIVE USE OF P.A.M. AND ANY OTHER TRADES USING THESE DRAWING USE THEM AT THERE OWN RISK. DIMENSIONS ON THESE DRAWINGS MAY NOT BE ALWAYS NOTED, FIELD CONDITIONS MAY REQUIRE CHANGES IN DIMENSIONS, SO OTHER TRADES USING THESE DRAWINGS MUST TAKE THEIR OWN FIELD DIMENSIONS.

PACIFIC ARCHITECTURAL MILLWORK
1041 LESLIE ST. LA HABRA, CA. 90631
PH: (714) 525-2059 FAX: (714) 525-2673

DATE: 05-10-10
DRAWN BY: JND
SCALE: NOTED
JOB: 3635
SUBMITTAL: 06
DWG: 2-31.2
SHEET(S):

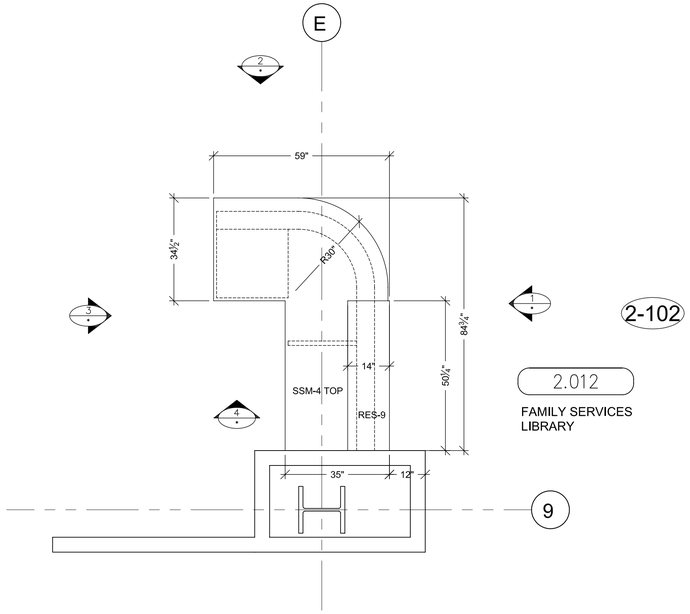

2 A PLAN VIEW @ COUNTER TOPS
SCALE: 1/2"=1'-0"
ARCH. REF: B6/A3.2E (SIM.)

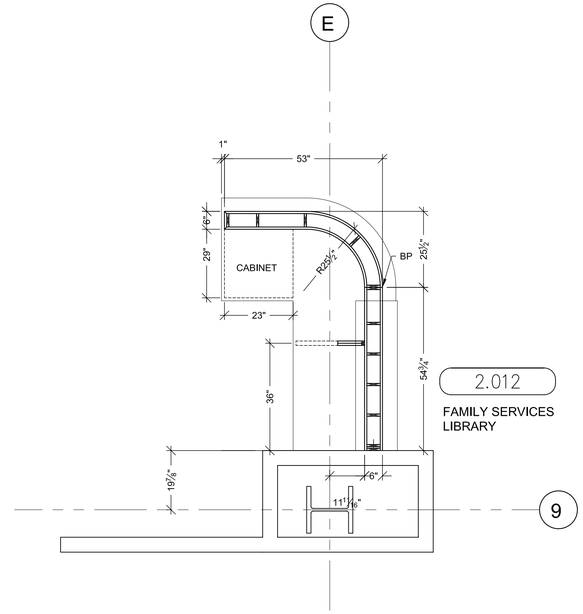

2 B PLAN SECTION @ DIE WALL & SUPPORTS
SCALE: 1/2"=1'-0"
ARCH. REF: B6/A3.2E (SIM.)

HARDWARE SCHEDULE

	ITEM	PART NO.	MANUF.	FINISH / COLOR
1	GROMMETS 2	EDP3-93D	MOCKETT	DESERT SAND
2				
3				

FINISH SCHEDULE

RES 9 - 3 FORM, SERIES: CHROMA ? FF: RENEWABLE MATTE
BF: REF. COLOR (TRANSACTION-TOP)

SSM 4 - SOLID SURFACE TOP
AVONITE KOKOURA F19117

PL 1 - PLASTIC LAMINATE - (EXT. DIE WALL)
WILSONART 10745-60 FONTHILL PEAR MATTE

PL 4 - PLASTIC LAMINATE - (INT DIE WALL / SUPPORTS)
ABET LAMINATI 130 SEI

STAINLESS STEEL BASE : 18 GA. BRUSHED #4 FINISH

1

MCCARTHY APPROVAL

A. Approved as noted for Architectural Review ☐

B. Review and Resubmit ☐

C. Rejected ☐

This review is for general conformance with Plans and Specifications only. Any deviations from same not clearly noted by the Preparer have not been reviewed. Review shall not constitute a complete check of detailed dimensions or count to serve to relieve the Preparer of contractual responsibility for any error or deviation from contract requirements.

McCarthy

By _____ Date _____

SHOP DRAWING REFERENCE NO. _____

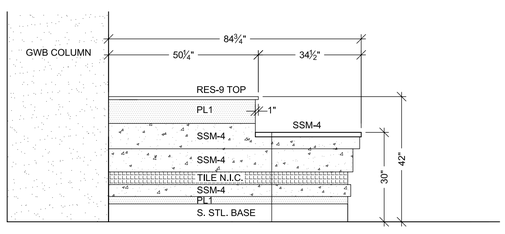

2 1 ELEVATION
SCALE: 1/2"=1'-0" ITEM: 2-102
ROOM: 2.012, FAMILY SERVICES LIBRARY
ARCH. REF: D5/A9.2A

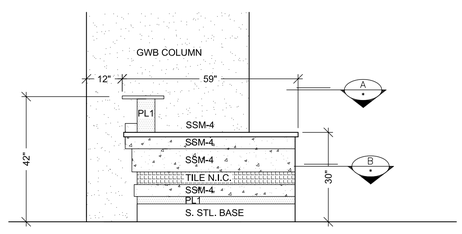

2 2 ELEVATION
SCALE: 1/2"=1'-0" ITEM: 2-102
ROOM: 2.012, FAMILY SERVICES LIBRARY
ARCH. REF: NONE

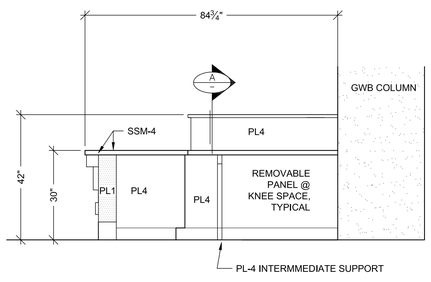

2 3 ELEVATION
SCALE: 1/2"=1'-0" ITEM: 2-102
ROOM: 2.012, FAMILY SERVICES LIBRARY
ARCH. REF: NONE

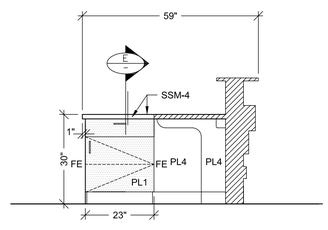

2 3 ELEVATION
SCALE: 1/2"=1'-0" ITEM: 2-102
ROOM: 2.012, FAMILY SERVICES LIBRARY
ARCH. REF: NONE

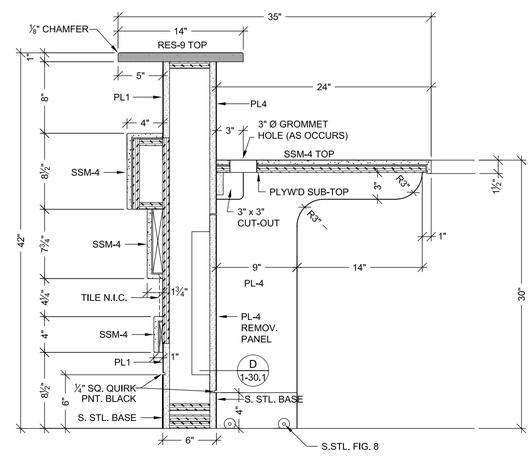

2 1 A VERTICAL SECTION
SCALE: 1 1/2"=1'-0"
ARCH. REF.: RFI #1319-0

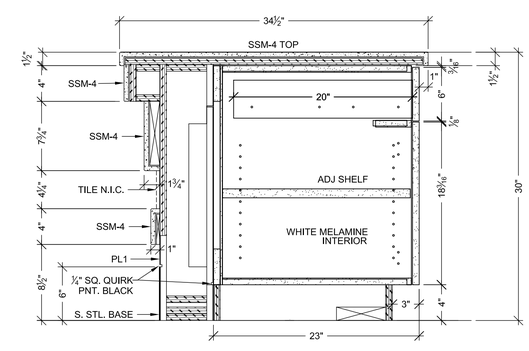

2 1 E VERTICAL SECTION
SCALE: 1 1/2"=1'-0"
ARCH. REF.: RFI #1319-0

RELEASE FOR PRODUCTION

SIGNATURE: _____

DATE: _____

NOTE: NO CHANGES CAN BE MADE AFTER AUTHORIZATION TO PROCEED.

NO	DATE	REVISION	SUB. #	BY
1	8-14-10	PER RFI #1484-0 DATED 5-19-10	-	JB
2	10-06-10	PER R.L.C. DATED 9-14-10	-	JB
3	-	-	-	
4	-	-	-	
5	-	-	-	
6	-	-	-	

PROJECT :
CHOC HOSPITAL
TOWER II
455 S. MAIN STREET
ORANGE, CA. 92868

FLOOR : SECOND FLOOR
ROOM # : 2.012, FAMILY SERVICES LIBRARY DESK
ITEM : 2-102
REF : B6/A3.2E

CONTRACTOR :
McCARTHY

ARCHITECT :
FKP ARCHITECTS

COPYRIGHT
ALL IDEAS DESIGNS, ARRANGEMENTS AND PLANS INDICATED OR REPRESENTED BY THIS DRAWING ARE THE PROPERTY OF FKP ARCHITECTS. THEY WERE CREATED, EVOLVED AND DEVELOPED FOR USE ON, AND IN CONNECTION WITH THE SPECIFIED PROJECT. NONE OF SUCH IDEAS, DESIGNS, ARRANGEMENT OF PLANS SHALL BE USED BY OR DISCLOSED TO ANY PERSON, FIRM OR CORPORATION FOR ANY PURPOSE WHATSOEVER WITHOUT THE WRITTEN PERMISSION OF FKP.

FIELD VERIFICATION
PLAN, SHOP DRAWINGS ARE MADE FOR THE EXCLUSIVE USE OF FKP ARCHITECTS. CONTRACTORS MUST USE DRAWING USE THEM AT THEIR OWN RISK. DIMENSIONS ON THESE DRAWINGS MAY NOT BE ALWAYS NOTED. FIELD CONDITIONS MAY REQUIRE CHANGES IN DIMENSIONS, SO OTHER TRADES USING THESE DRAWINGS MUST TAKE THEIR OWN FIELD DIMENSIONS.

PACIFIC
ARCHITECTURAL MILLWORK
1041 LESLIE ST. LA HABRA, CA. 90631
PH.: (714) 525-8203 FAX: (714) 525-2073

DATE: 05-10-10	
DRAWN BY: JND	SCALE: NOTED
JOB: 3635	SUBMITTAL: 06
DWG: 2-32	
	SHEET(S):

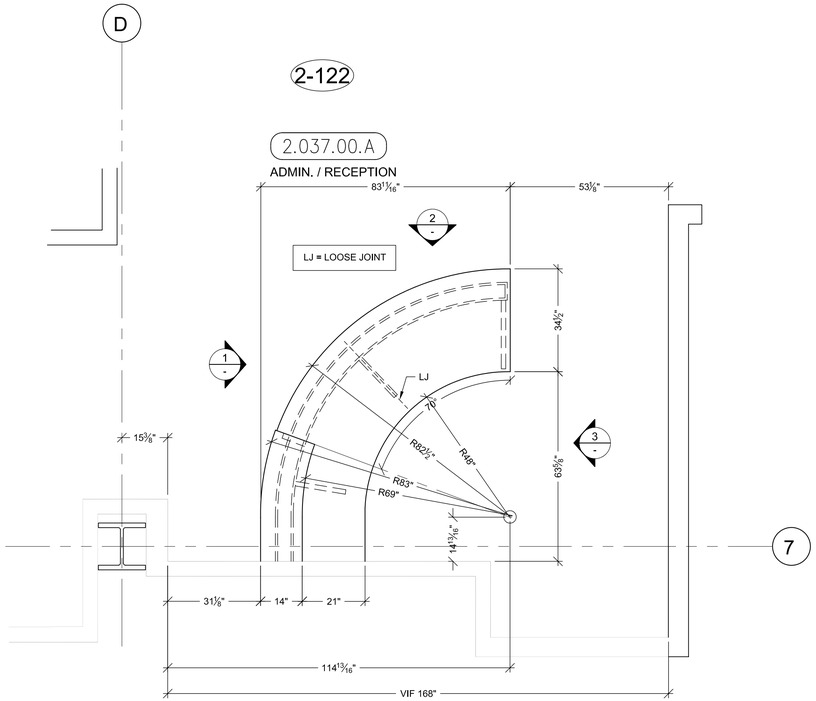

A PLAN VIEW @ COUNTER TOPS

SCALE: 1/2"=1'-0"
ARCH. REF: B6/A3.2J (SIM.)

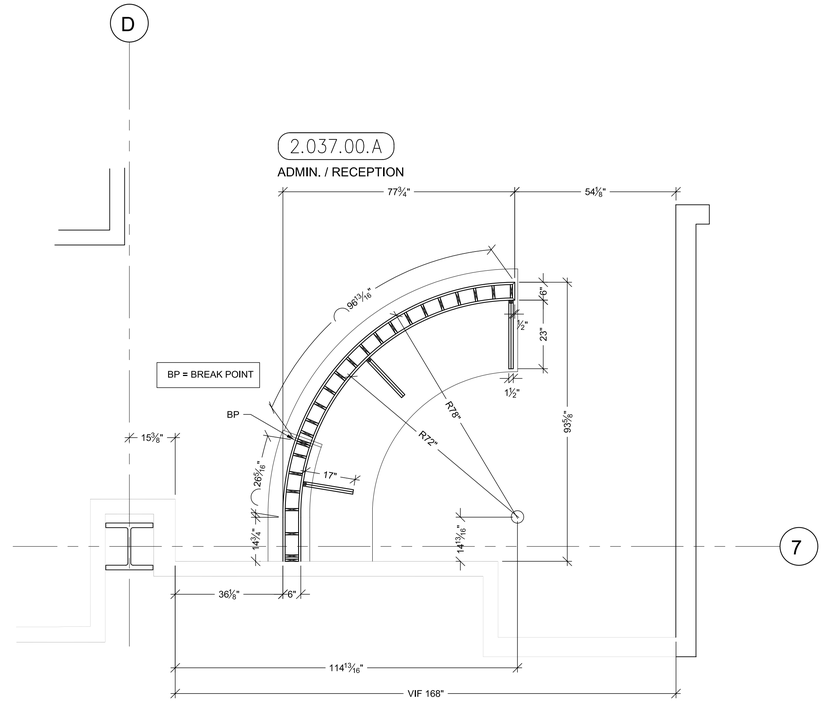

B PLAN SECTION @ DIE WALL & SUPPORTS

SCALE: 1/2"=1'-0"
ARCH. REF: B6/A3.2J (SIM.)

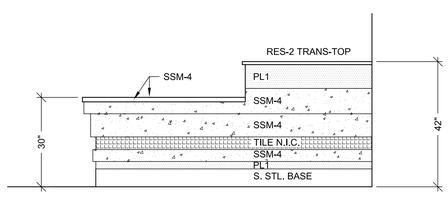

1 ELEVATION

SCALE: 1/2"=1'-0" ITEM: 2-122
ROOM: 2.037.00.A, ADMIN. / RECEPTION
ARCH. REF: A3/A9.2A

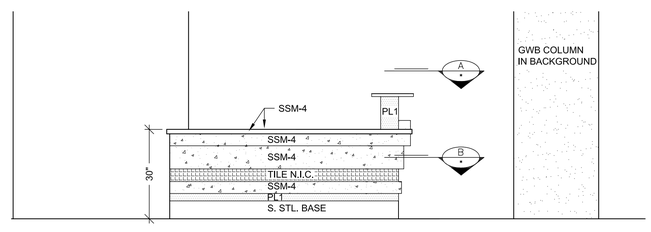

2 ELEVATION

SCALE: 1/2"=1'-0" ITEM: 2-122
ROOM: 2.037.00.A, ADMIN. / RECEPTION
ARCH. REF: A2/A9.2A

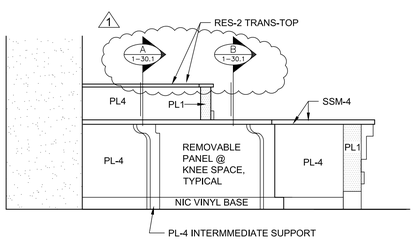

3 ELEVATION

SCALE: 1/2"=1'-0" ITEM: 2-122
ROOM: 2.037.00.A, ADMIN. / RECEPTION
ARCH. REF: NONE

HARDWARE SCHEDULE

	ITEM	PART NO.	MANUF.	FINISH / COLOR
1	GROMMETS	EDP3-93D	MOCKETT	DESERT SAND
2				
3				

FINISH SCHEDULE

RES 2 - 3 FORM, SERIES: CHROMA, COLOR: MAI TAI INFUSED FF: RENEWABLE MATTE
BF: REF. COLOR (TRANSACTION-TOP)

SSM 4 - SOLID SURFACE TOP
AVONITE KOKOURA F19117

PL 1 - PLASTIC LAMINATE - (EXT. DIE WALL)
WILSONART 10745-60 FONTHILL PEAR MATTE

PL 4 - PLASTIC LAMINATE - (INT DIE WALL / SUPPORTS)
ABET LAMINATI 130 SEI

STAINLESS STEEL BASE : 18 GA. BRUSHED #4 FINISH

NO	DATE	REVISION	SUB. #	BY
1	8-14-10	PER RFI #1484-0 DATED 5-19-10	-	JB
2	10-06-10	PER R.L.C. DATED 9-14-10	-	JB
3	-	-	-	-
4	-	-	-	-
5	-	-	-	-
6	-	-	-	-

MCCARTHY APPROVAL

A. Approved as noted for Architectural Review ☐

B. Review and Resubmit ☐

C. Rejected ☐

This review is for general conformance with Plans and Specifications only. Any deviations from same not clearly noted by the Preparer have not been reviewed. Review shall not constitute a complete check of detailed dimensions or count to serve to relieve the Preparer of contractual responsibility for any error or deviation from contract requirements.

McCarthy

By _____ Date _____

SHOP DRAWING REFERENCE NO. _____

RELEASE FOR PRODUCTION

SIGNATURE: _____

DATE: _____

NOTE: NO CHANGES CAN BE MADE AFTER AUTHORIZATION TO PROCEED.

PROJECT :
CHOC HOSPITAL
TOWER II
455 S. MAIN STREET
ORANGE, CA. 92868

FLOOR : SECOND FLOOR
ROOM # : 2.037.00.A, ADMIN. / RECEPTION
ITEM : 2-122
REF : B6/A3.2J

CONTRACTOR :
McCARTHY

ARCHITECT :
FKP ARCHITECTS

COPYRIGHT
ALL IDEAS DESIGNS, ARRANGEMENTS AND PLANS INDICATED OR REPRESENTED BY THIS DRAWING ARE OWNED BY, AND THE PROPERTY OF P.A.M. AND WERE CREATED,EVOLVED AND DEVELOPED FOR USE ON, AND IN CONNECTION WITH THE SPECIFIED PROJECT. NONE OF SUCH IDEAS, DESIGNS, ARRANGEMENT OF PLANS OR OTHER WORK MATTER MAY BE USED BY ANY PERSON, FIRM OR CORPORATION FOR ANY PURPOSE WHATSOEVER WITHOUT THE WRITTEN PERMISSION OF P.A.M.

FIELD VERIFICATION
P.A.M. SHOP DRAWINGS ARE MADE FOR THE EXCLUSIVE USE OF P.A.M. AND ANY OTHER TRADES USING THESE DRAWING USE THEM AT THERE OWN RISK. DIMENSIONS ON THESE DRAWINGS MAY NOT BE ALWAYS NOTED. FIELD CONDITIONS MAY REQUIRE CHANGES IN DRAWINGS. SO OTHER TRADES USING THESE DRAWINGS MUST TAKE THEIR OWN FIELD DIMENSIONS.

PACIFIC ARCHITECTURAL MILLWORK
1041 LESLIE ST. LA HABRA, CA. 90631
PH: (714) 526-2809 FAX: (714) 526-2873

DATE: 05-10-10
DRAWN BY: JND SCALE: NOTED
JOB: 3635 SUBMITTAL: 06
DWG: 2-33
SHEET(S):

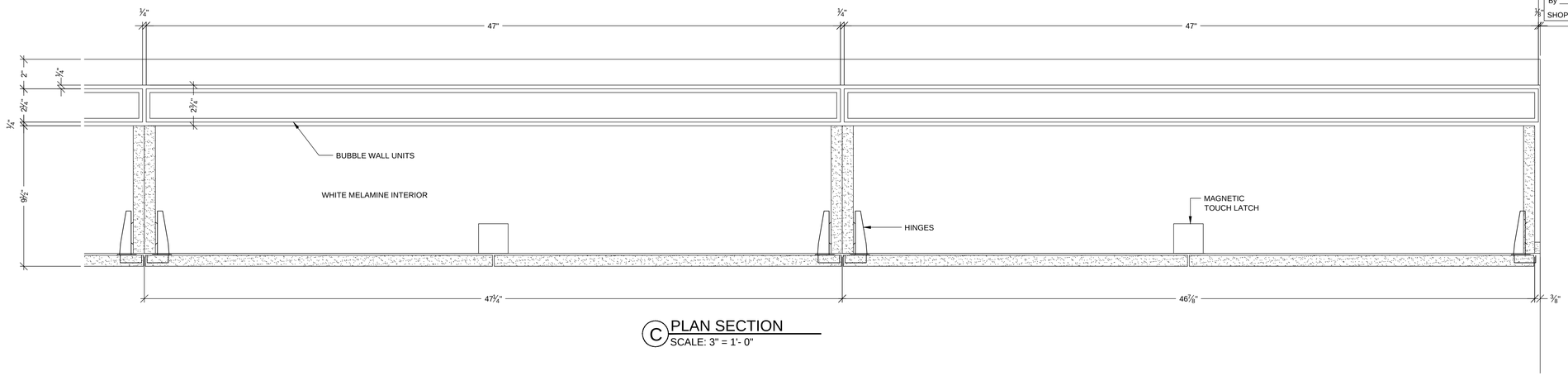

C PLAN SECTION
SCALE: 3" = 1'- 0"

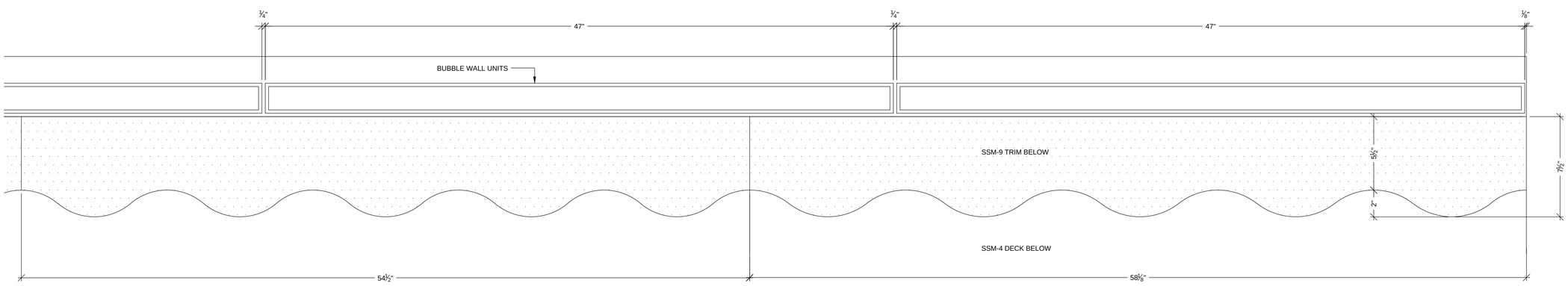

D PLAN SECTION
SCALE: 3" = 1'- 0"

MCCARTHY APPROVAL

A. Approved as noted for Architectural Review ☐

B. Review and Resubmit ☐

C. Rejected ☐

This review is for general conformance with Plans and Specifications only. Any deviations from same not clearly noted by the Preparer have not been reviewed. Review shall not constitute a complete check of detailed dimensions or count to serve to relieve the Preparer of contractual responsibility for any error or deviation from contract requirements.

McCarthy

By _____ Date _____

SHOP DRAWING REFERENCE NO. _____

DATE	NO	REVISION	SUB #	BY
5-4-11	13	PER A.S.I. #58 DATED 2-4-11		JB
2-29-12		FIELD DIMENSIONS		MW
	3			
	4			
	5			
	6			

PROJECT :
CHOC HOSPITAL
TOWER II
455 S. MAIN STREET
ORANGE, CA. 92868

FLOOR : SECOND FLOOR
ROOM # : 2.041.00 A, PUBLIC DINING SEATING AREA
ITEM : 2-130
REF : A6/A5.2C

ARCHITECT:
FKP ARCHITECTS

CONTRACTOR :
McCARTHY

COPYRIGHT

ALL IDEAS,DESIGNS, ARRANGEMENTS AND PLANS INDICATED OR REPRESENTED BY THIS DRAWING ARE OWNED BY, AND THE PROPERTY OF P.A.M. AND WERE CREATED,EVOLVED AND DEVELOPED FOR USE ON, AND IN CONECTION WITH THE SPECIFIED PROJECT. NONE OF SUCH IDEAS, DESIGNS, ARRANGEMENT OF PLANS SHALL BE USED BY OR DISCLOSED TO ANY PERSON,FIRM OR CORPORATION FOR ANY PURPOSE WHATSOEVER WITHOUT THE WRITTEN PERMISSION OF P.A.M.

FIELD VERIFICATION

P.A.M. SHOP DRAWINGS ARE MADE FOR THE EXCLUSIVE USE OF P.A.M. AND ANY OTHER TRADES USING THESE DRAWING USE THEM AT THERE OWN RISK. DIMENSIONS ON THESE DRAWINGS MAY NOT BE ALWAYS NOTED, FIELD CONDITIONS MAY REQUIRE CHANGES IN DIMENSIONS, SO OTHER TRADES USING THESE DRAWINGS MUST TAKE THEIR OWN FIELD DIMENSIONS.

PACIFIC
ARCHITECTURAL MILLWORK
1041 LESLIE ST LA HABRA, CA. 90631
PH: (714) 525-2059 FAX: (714) 525-2673

DATE: 5-11-11
DRAWN BY: JB
SCALE: NOTED
JOB: 3635
SUBMITTAL: 25
DWG: 2-34.3
SHEET(S):

RELEASE FOR PRODUCTION

SIGNATURE: _____

DATE: _____

NOTE: NO CHANGES CAN BE MADE AFTER AUTHORIZATION TO PROCEED.

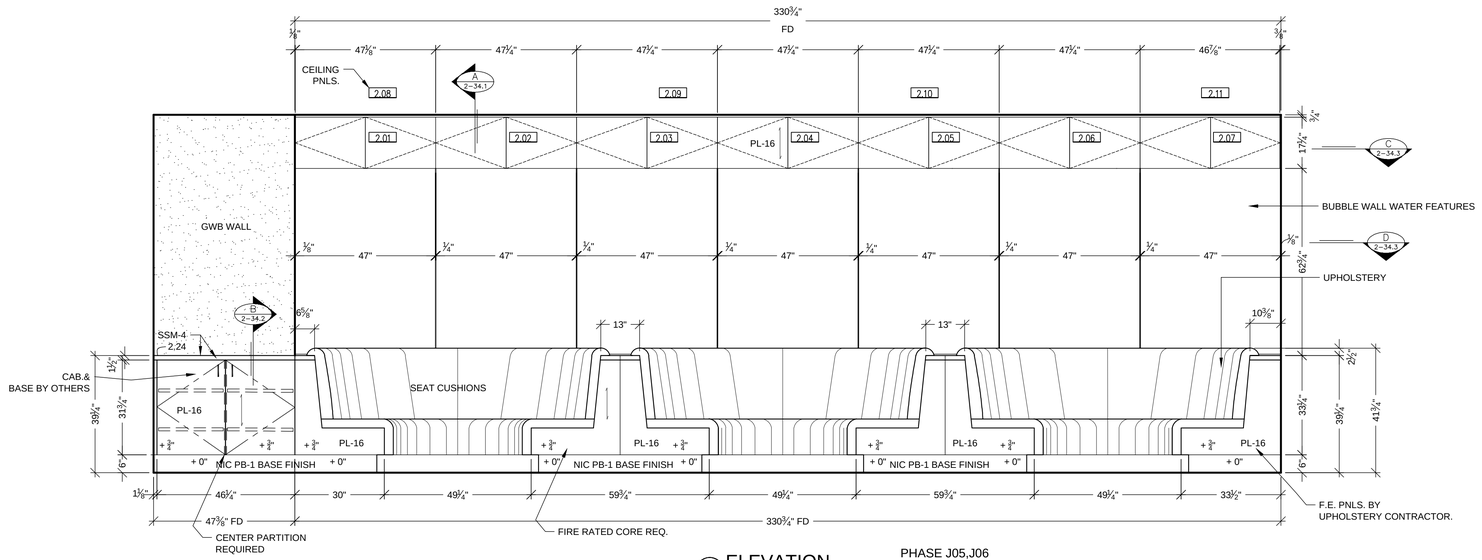

2 ELEVATION

PHASE J05,J06

SCALE: 1/2"=1'-0" ITEM: 2-130
ROOM: 2.041.00.A, PUBLIC DINING
ARCH. REF: B3/IA8.3

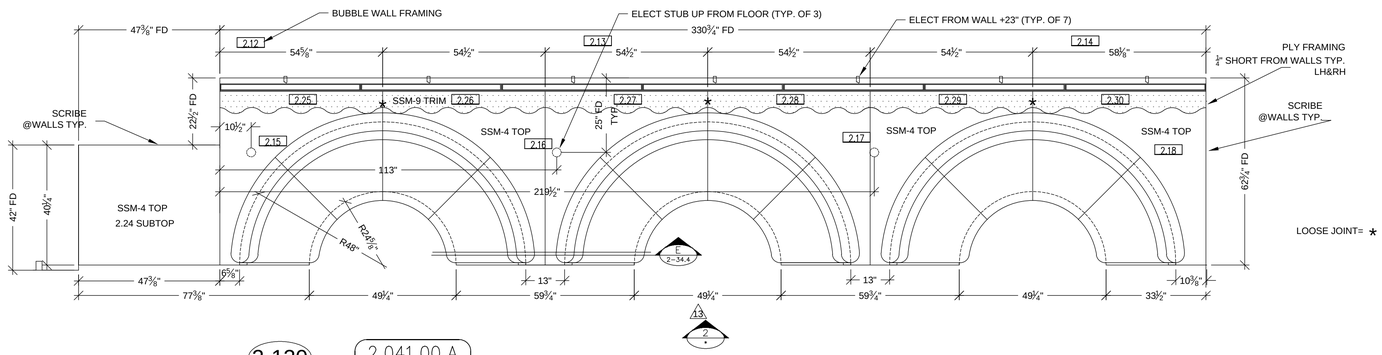

2-130

2.041.00.A

PUBLIC DINING SEATING AREA

1 PLAN VIEW @ UPHOLSTERED BOOTHS

SCALE: 1/2"=1'-0"
ARCH. REF: A6/IA5.2C (SIM.)

HARDWARE SCHEDULE

	ITEM	PART NO.	MANUF.	FINISH / COLOR
1	METAL WIRE PULL 4" CTC	MC402-4-A	EPCO	SATIN CLEAR ANODIZED
2	METAL SHELF SUPPORT	282.04.711	HAFELE	NICKLE PLATED
3	BLUM HINGE PLATE	B173L810	BLUM	NICKLE PLATED
4	BLUM HINGE (INSERTA)	73T5590 F.O., S.C. , 120	BLUM	NICKLE PLATED
5	MAGNETIC TOUCH LATCHES	508-BL-PWS	EPCO	BLACK PLASTIC
6				
7				
8				
9				
10				

13

FINISH SCHEDULE

PL 16 - PLASTIC LAMINATE - (SEATING STRUCTURE & CABINET EXTERIOR)
LAMINART 953 RENAISSANCE CHERRY
FLAT CUT,BOOKMATCHED, SATIN 1 2

13 SSM 9 SOLID SURFACE TRIM
AVONITE K3-8465 SKY GLASS SATIN

13 SSM 4 SOLID SURFACE TOPS
AVONITE KOKOURA F19117

SEAT UPHOLSTERY: KNOLL PATTERN VIBE
COLOR: CHILL #K1029/10

BACK UPHOLSTERY: MOMENTUM PATTERN ECHO
COLOR: CLIMATE

WHITE MELAMINE INTERIORS U.N.O.

MCCARTHY APPROVAL

A. Approved as noted for Architectural Review ☐
B. Review and Resubmit ☐
C. Rejected ☐

This review is for general conformance with Plans and Specifications only. Any deviations from same not clearly noted by the Preparer have not been reviewed. Review shall not constitute a complete check of detailed dimensions or count to serve to relieve the Preparer of contractual responsibility for any error or deviation from contract requirements.

McCarthy

By _____ Date _____

SHOP DRAWING REFERENCE NO. _____

RELEASE FOR PRODUCTION

SIGNATURE: _____

DATE: _____

NOTE: NO CHANGES CAN BE MADE AFTER AUTHORIZATION TO PROCEED.

NO	DATE	REVISION	SUB #	BY
1	8-14-10	PER RFI #1484-0 DATED 5-19-10	-	JB
2	10-06-10	PER R.L.C. DATED 9-14-10	-	JB
3	5-4-11	PER A.S.I. #58 DATED 2-4-11	25	JB
4	2-29-12	FIELD DIMENSIONS	-	MW
5	-	-	-	-
6	-	-	-	-

PROJECT : CHOC HOSPITAL TOWER II
455 S. MAIN STREET ORANGE, CA. 92868

FLOOR : SECOND FLOOR
ROOM # : 2.041.00.A, PUBLIC DINING SEATING AREA
ITEM : 2-130
REF : A6/IA5.2C

CONTRACTOR: McCARTHY

ARCHITECT : FKP ARCHITECTS

COPYRIGHT

ALL IDEAS DESIGNS, ARRANGEMENTS AND PLANS INDICATED OR REPRESENTED BY THIS DRAWING ARE THE PROPERTY OF FKP ARCHITECTS. THEY WERE CREATED,EVOLVED AND DEVELOPED FOR USE ON AND IN CONECTION WITH THE SPECIFIED PROJECT. NONE OF SUCH IDEAS, DESIGNS, ARRANGEMENT OF PLANS SHALL BE USED BY OR DISCLOSED TO ANY PERSON, FIRM OR CORPORATION FOR ANY PURPOSE WHATSOEVER WITHOUT THE WRITTEN PERMISSION OF FKP.

FIELD VERIFICATION

F.A.M. SHOP DRAWINGS ARE MADE FOR THE EXCLUSIVE USE OF THE CONTRACTOR. CONTRACTOR MUST USE DRAWING USE THEM AT THERE OWN RISK. DIMENSIONS ON THESE DRAWINGS MAY NOT BE ALWAYS NOTED. FIELD CONDITIONS MAY REQUIRE CHANGES IN DIMENSIONS, SO OTHER TRADES USING THESE DRAWINGS MUST TAKE THEIR OWN FIELD DIMENSIONS.

PACIFIC ARCHITECTURAL MILLWORK
1041 LESLIE ST LA HABRA, CA. 90631
PH: (714) 525-2059 FAX: (714) 525-2673

DATE: 05-10-10	
DRAWN BY: JND	SCALE: NOTED
JOB: 3635	SUBMITTAL: 06
DWG: 2-34	
J05J06	SHEET(S):

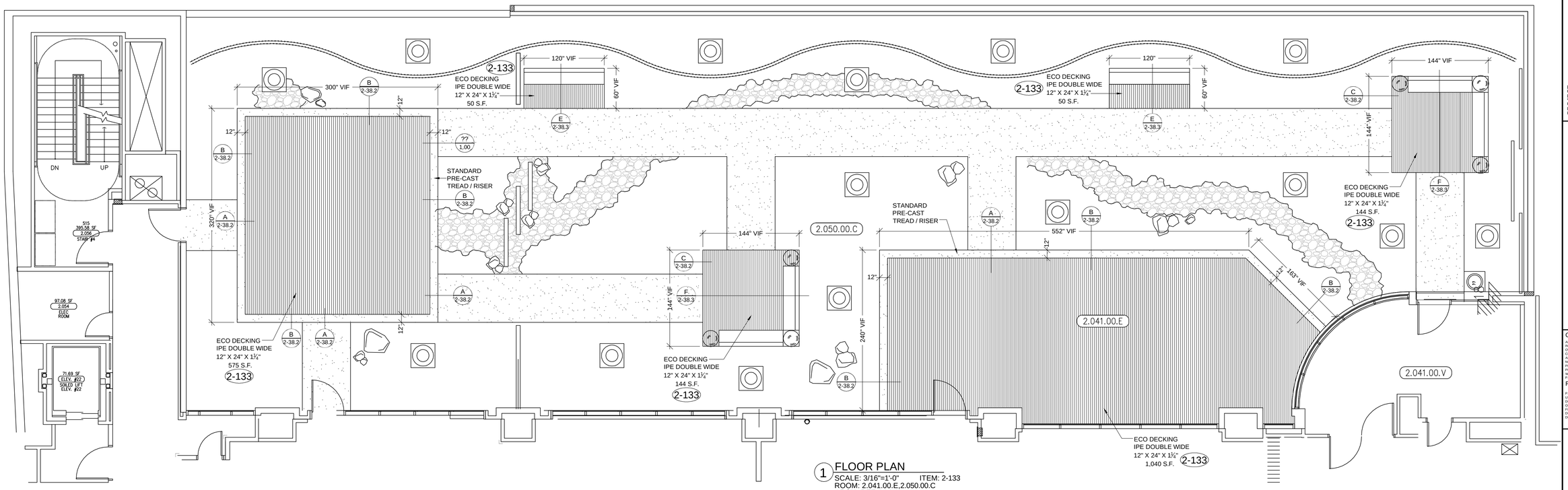

1 FLOOR PLAN
SCALE: 3/16"=1'-0" ITEM: 2-133
ROOM: 2.041.00.E,2.050.00.C
ARCH. REF: LA1.1

DATE	NO	REVISION	SUB.	BY
–	1	X	–	X
10-06-10	2	PER R.L.C. DATED 9-14-10	–	JB
–	3		–	
–	4		–	
–	5		–	
–	6		–	

PROJECT:
CHOC HOSPITAL
TOWER II
455 S. MAIN STREET
ORANGE, CA. 92868

FLOOR : LEVEL 2
ROOM # : 2.041.00.E,2.050.00.C,2.080.00.C ITEM # : 2-133
ITEM : CHILDRENS TERRACE & EMPLOYEE DINING
REF : LA1.1,LA2.2,LA2.3

ARCHITECT: PACIFIC ARCHITECTURAL MILLWORK
1041 LESLIE ST. LA HABRA, CA. 90631
PH: (714) 525-2059 FAX: (714) 525-2673
www.pacifactory.com

CONTRACTOR: McCARTHY

COPYRIGHT
ALL IDEAS DESIGNS, ARRANGEMENTS AND PLANS INDICATED OR REPRESENTED BY THIS DRAWING AR OWNED BY, AND THE PROPERTY OF P.A.M. AND WER CREATED,EVOLVED AND DEVELOPED FOR USE ON, AND IN CONECTION WITH THE SPECIFIED PROJECT. NONE OF SUCH IDEAS, DESIGNS, ARRANGEMENT OF PLANS ARE TO BE USED BY ANY OTHER PERSON, PERSON, FIRM OR CORPORATION FOR ANY PURPOS WHATSOEVER WITHOUT THE WRITTEN PERMISSION P.A.M.

FIELD VERIFICATION
P.A.M. SHOP DRAWINGS ARE MADE FOR THE EXCLU USE OF P.A.M. AND ANY OTHER TRADES USING THE DRAWING USE THEM AT THERE OWN RISK. DIMENSIC ON THESE DRAWINGS MAY NOT BE ALWAYS NOTED, FIELD CONDITIONS MAY REQUIRE CHANGES IN DIMENSIONS, SO OTHER TRADES USING THESE DRAWINGS MUST TAKE THEIR OWN FIELD DIMENSIO

DATE: 12-21-10
DRAWN BY: JB
SCALE: NOTED
JOB: 3635
SUBMITTAL: 19
DWG: 2-38
SHEET(S):

RELEASE FOR PRODUCTION
SIGNATURE: _____
DATE: _____
NOTE: NO CHANGES CAN BE MADE AFTER AUTHORIZATION TO PROCEED.

PDF created with FinePrint pdfFactory trial version www.pdffactory.com

FINISH SCHEDULE

SSM 4	- SOLID SURFACE - (TOPS) AVONITE KOKOURA F19117

PLEASE VERIFY THESE FINISHES.

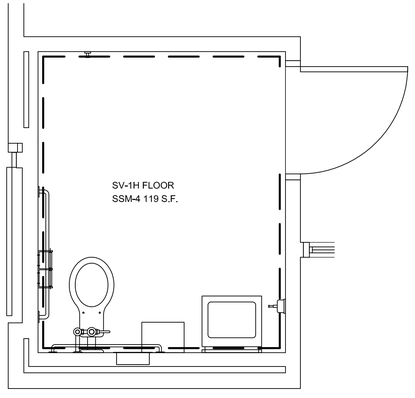

1 FLOOR PLAN
SCALE: 1/2" = 1'- 0" ITEM: 2-163
ROOM: 2.074.01
ARCH. REF: A3.2G

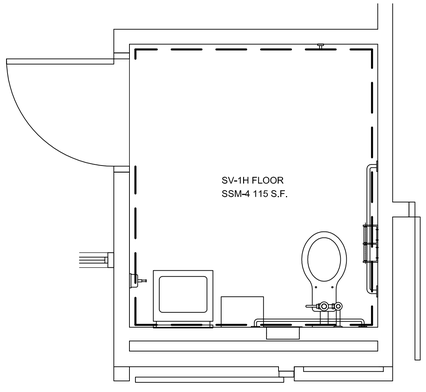

2 FLOOR PLAN
SCALE: 1/2" = 1'- 0" ITEM: 2-163
ROOM: 2.076.01
ARCH. REF: A3.2G

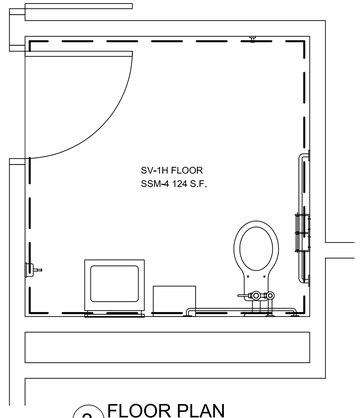

3 FLOOR PLAN
SCALE: 1/2" = 1'- 0" ITEM: 2-163
ROOM: 2.085
ARCH. REF: A3.2G

SSM-4 @ 60" A.F.F. @ SV-1H FLOOR (A / SS-1)

RELEASE FOR PRODUCTION
SIGNATURE: _____
DATE: _____
NOTE: NO CHANGES CAN BE MADE AFTER AUTHORIZATION TO PROCEED.

DATE	NO	REVISION	SUB. #	BY
11-1-11	1	PER R.L.C. DATED 10-13-11	–	JB
–	2		–	
–	3		–	
–	4		–	
–	5		–	
–	6		–	

PROJECT :
CHOC HOSPITAL
TOWER II
455 S. MAIN STREET
ORANGE, CA. 92868

FLOOR : SECOND LEVEL
ROOM # : VARIOUS
ITEM : SOLID SURFACE WALL PANELS
REF : x
ITEM # : 2-163

CONTRACTOR :
McCARTHY

ARCHITECT :
FKP ARCHITECTS

COPYRIGHT
ALL IDEAS DESIGNS, ARRANGEMENTS AND PLANS INDICATED OR REPRESENTED BY THIS DRAWING ARE THE PROPERTY OF P.A.M. ARCHITECTURAL MILLWORK. CREATED, FOLDED AND DEVELOPED FOR USE ON, AND IN CONECTION WITH THE SPECIFIED PROJECT. NONE OF SUCH IDEAS, DESIGNS, ARRANGEMENT OF PLANS SHALL BE USED BY, OR DISCLOSED TO ANY PERSON, FIRM OR CORPORATION FOR ANY PURPOSE WHATSOEVER WITHOUT THE WRITTEN PERMISSION OF P.A.M.

FIELD VERIFICATION
P.A.M. SHOP DRAWINGS ARE MADE FOR THE EXCLUSIVE USE OF P.A.M. AND ANY OTHER TRADES USING THESE DRAWINGS USE THEM AT THEIR OWN RISK. DIMENSIONS ARE NOT GUARANTEED UNLESS SPECIFICALLY NOTED. FIELD CONDITIONS MAY REQUIRE CHANGES IN DIMENSIONS, SO OTHER TRADES USING THESE DRAWINGS MUST TAKE THEIR OWN FIELD DIMENSIONS.

PACIFIC
ARCHITECTURAL MILLWORK
7041 LESLIE STA LABRA, CA. 90631
PH: (714) 525-2639 FAX: (714) 525-2673

DATE: 9/23/2011
DRAWN BY: JB
SCALE: NOTED
JOB: 3635
SUBMITTAL: 27
DWG: 2.39
SHEET(S):

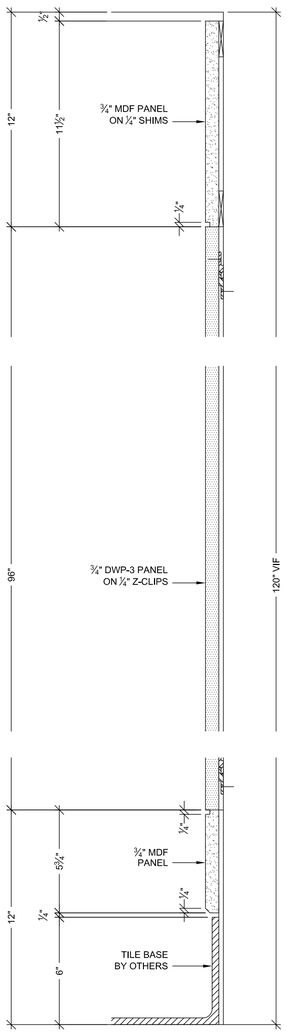

A SECTION
SCALE: 3"=12"
REF: A3,A5/IA8.11

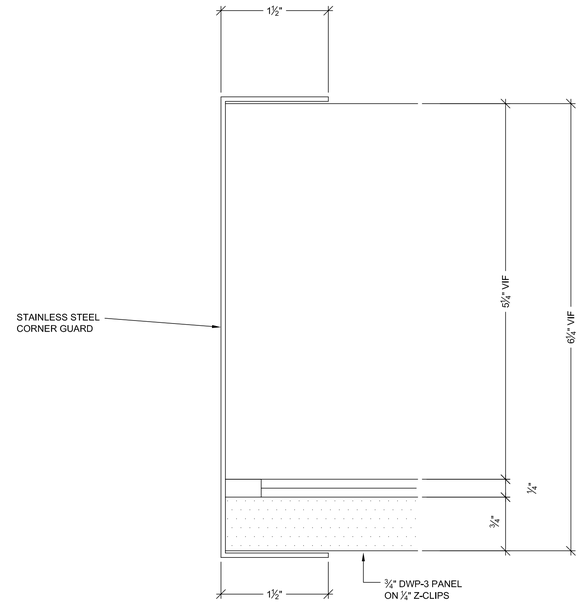

C PLAN SECTION
SCALE: FULL
REF: B4/IA8.11

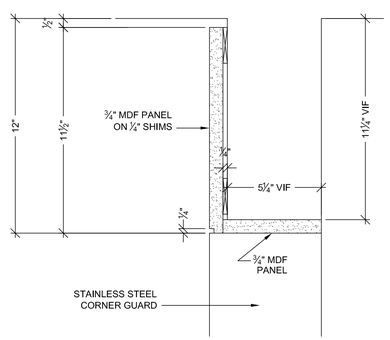

B SECTION
SCALE: 3"=12"
REF: A6/IA8.11

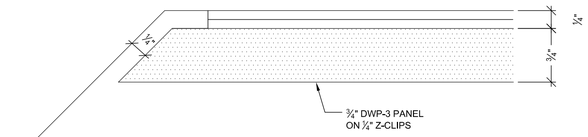

D PLAN SECTION
SCALE: FULL
REF: B3/IA8.11

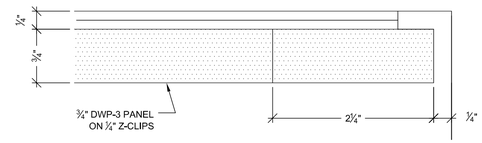

E PLAN SECTION
SCALE: FULL
REF: B3/IA8.11 SIM.

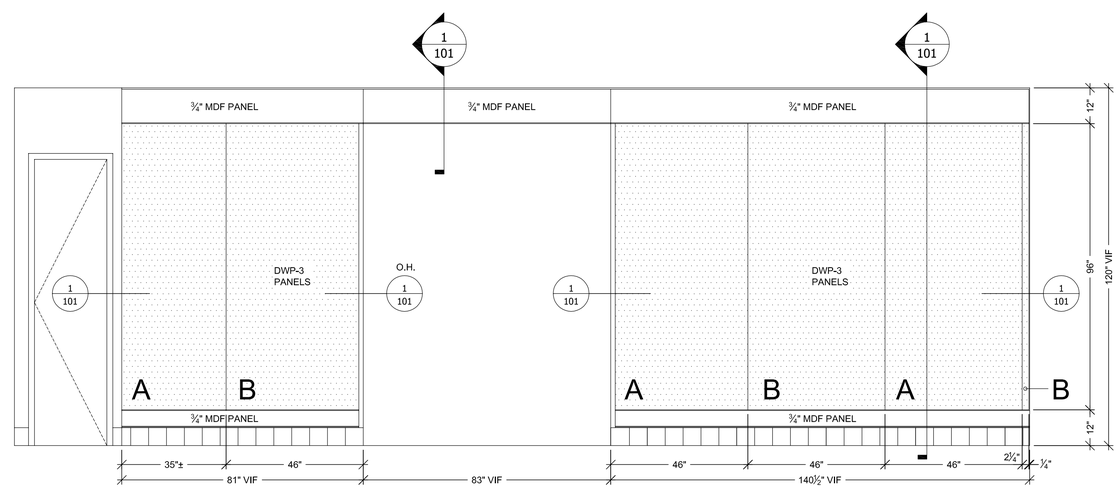

2 ELEVATION
SCALE: 1/2"=12" ROOM: 2.041.00.A
REF: B2/IA8.11 ITEM: 2-130.1

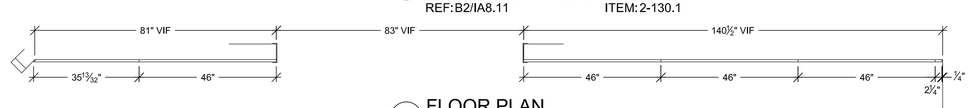

1 FLOOR PLAN
SCALE: 1/2"=12" ROOM: 2.041.00.A
REF: IA5.2C ITEM: 2-130.1

FINISH SCHEDULE

DWP 3 B&N ICONIC PANELS - LINE COUNTRY A&B (46"X 96" PANELS)
910 PAINTABLE LAM (FIRE RATED CORE)
PAINTED BY OTHERS

MDF PANELS - 3/4" MEDITE FR (PRIMED) PAINTED BY OTHERS

18 GA. STAINLESS STEEL CORNER GUARD #4 FINISH

PLEASE VERIFY THESE FINISHES

MCCARTHY APPROVAL

A. Approved as noted for Architectural Review ☐

B. Review and Resubmit ☐

C. Rejected ☐

This review is for generall conformance with Plans and Specifications only. Any deviations from same not clearly noted by the Preparer have not been reviewed. Review shall not constitute a complete check of detailed dimensions or count to serve to relieve the Preparer of contractual responsibility for any error or deviation from contract requirements.

McCarthy

By _____ Date _____ _____

SHOP DRAWING REFERENCE NO. _____

DATE	NO	REVISION	SUB. #	BY
	1			
	2			
	3			
	4			
	5			
	6			

PROJECT :
CHOC HOSPITAL
TOWER II
455 S. MAIN STREET
ORANGE, CA. 92868

FLOOR : SECOND FLOOR
ROOM # : 2.041.00.A, PUBLIC DINING SEATING AREA
ITEM : 2-130.1
REF : IA8.11

ARCHITECT :
FKP ARCHITECTS

CONTRACTOR :
McCARTHY

COPYRIGHT
ALL IDEAS DESIGNS, ARRANGEMENTS AND PLANS INDICATED OR REPRESENTED BY THE DRAWING ARE OWNED BY, AND THE PROPERTY OF P.A.M. AND WERE CREATED,EVOLVED AND DEVELOPED FOR USE ON, AND IN CONECTION WITH THE SPECIFIED PROJECT, NO OTHER USE OR USE ON OTHER PROJECTS OF THESE PLANS SHALL BE USED BY OR DISCLOSED TO ANY PERSON, FIRM OR CORPORATION FOR ANY PURPOSE WHATSOEVER WITHOUT THE WRITTEN PERMISSION OF P.A.M.

FIELD VERIFICATION

P.A.M. SHOP DRAWINGS ARE MADE FOR THE EXCLUSIVE USE OF P.A.M. AND ANY OTHER TRADES USING THESE DRAWING USE THEM AT THEIR OWN RISK. DIMENSIONS ON THESE DRAWINGS MAY NOT BE ALWAYS NOTED. FIELD CONDITIONS MAY REQUIRE CHANGES IN DIMENSIONS, SO OTHER TRADES USING THESE DRAWINGS MUST TAKE THEIR OWN FIELD DIMENSIONS.

PACIFIC ARCHITECTURAL MILLWORK
1041 LESLIE ST. LA HABRA, CA. 90631
PH: (714) 525-2093 FAX: (714) 525-2013

DATE: 9-29-11
DRAWN BY: JB SCALE: NOTED
JOB: 3635 SUBMITTAL: X
DWG: 2-40
SHEET(S):

RELEASE FOR PRODUCTION
SIGNATURE: _____
DATE: _____
NOTE: NO CHANGES CAN BE MADE AFTER AUTHORIZATION TO PROCEED.

FINISH SCHEDULE

MDF PANELS - 3/4" MEDITE FR (PRIMED) PAINTED BY OTHERS

18 GA. STAINLESS STEEL BASE W/ #4 FINISH

PLEASE VERIFY THESE FINISHES

MCCARTHY APPROVAL

A. Approved as noted for Architectural Review ☐

B. Review and Resubmit ☐

C. Rejected ☐

This review is for generall conformance with Plans and Specifications only. Any deviations from same not clearly noted by the Preparer have not been reviewed. Review shall not constitute a complete check of detailed dimensions or count to serve to relieve the Preparer of contractual responsibility for any error or deviation from contract requirements.

McCarthy

By _____ Date _____ _____

SHOP DRAWING REFERENCE NO. _____

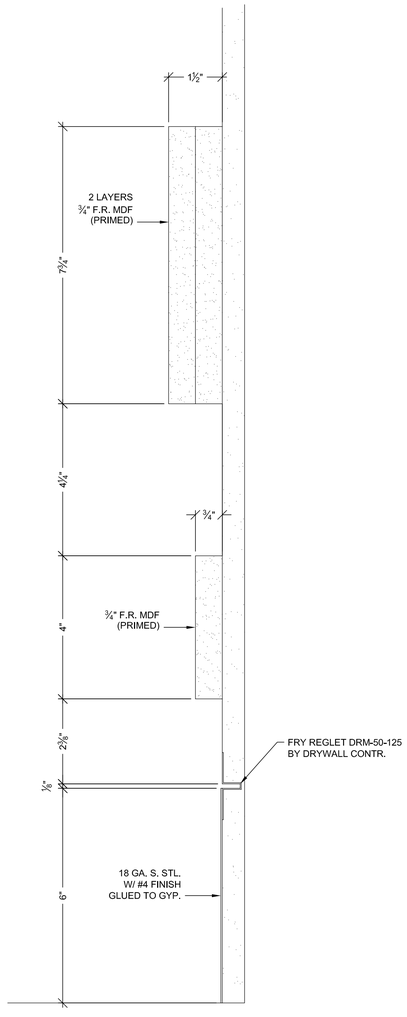

F SECTION
SCALE: 6"=12"
REF:A5/IA7.1

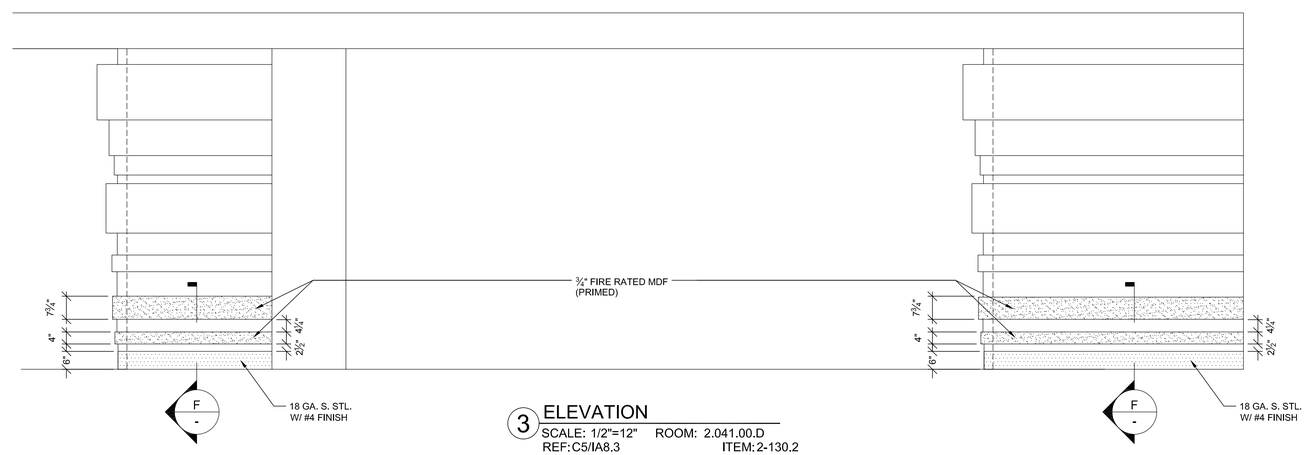

3 ELEVATION
SCALE: 1/2"=1" ROOM: 2.041.00.D
REF:C5/IA8.3 ITEM:2-130.2

NO	DATE	REVISION	SUB. #	BY
1				
2				
3				
4				
5				
6				

PROJECT :
CHOC HOSPITAL
TOWER II
455 S. MAIN STREET
ORANGE, CA. 92868

FLOOR : SECOND FLOOR
ROOM #: 2.041.00.D, PUBLIC DINING ENTRY
ITEM : 2-130.2
REF : A5/IA7.1,C5/IA8.3

CONTRACTOR :
McCARTHY

ARCHITECT :
FKP ARCHITECTS

COPYRIGHT

ALL IDEAS DESIGNS, ARRANGEMENTS AND PLANS INDICATED OR REPRESENTED BY THIS DRAWING ARE OWNED BY, AND THE PROPERTY OF P.A.M. AND WERE CREATED,EVOLVED AND DEVELOPED FOR USE ON, AND IN CONECTION WITH THE SPECIFIED PROJECT. NONE OF SUCH IDEAS, DESIGNS, ARRANGEMENT OF PLANS SHALL BE USED BY OR DISCLOSED TO ANY PERSON, FIRM OR CORPORATION FOR ANY PURPOSE WHATSOEVER WITHOUT THE WRITTEN PERMISSION OF P.A.M.

FIELD VERIFICATION

P.A.M. SHOP DRAWINGS ARE MADE FOR THE EXCLUSIVE USE OF P.A.M. AND ANY OTHER TRADES USING THESE DRAWING USE THEM AT THERE OWN RISK. DIMENSIONS ON THESE DRAWINGS MAY NOT BE ALWAYS NOTED. FIELD CONDITIONS MAY REQUIRE CHANGES IN DIMENSIONS, SO OTHER TRADES USING THESE DRAWINGS MUST TAKE THER OWN FIELD DIMENSIONS.

PACIFIC ARCHITECTURAL MILLWORK
104 LESLIE ST LA HABRA, CA. 90631
PH: (714) 525-2059 FAX: (714) 525-2073

DATE: 10-13-11
DRAWN BY: JB
SCALE: NOTED
JOB: 3635
SUBMITTAL: X
DWG: 2-40.1
SHEET(S):

RELEASE FOR PRODUCTION

SIGNATURE: _____

DATE: _____

NOTE: NO CHANGES CAN BE MADE AFTER AUTHORIZATION TO PROCEED.

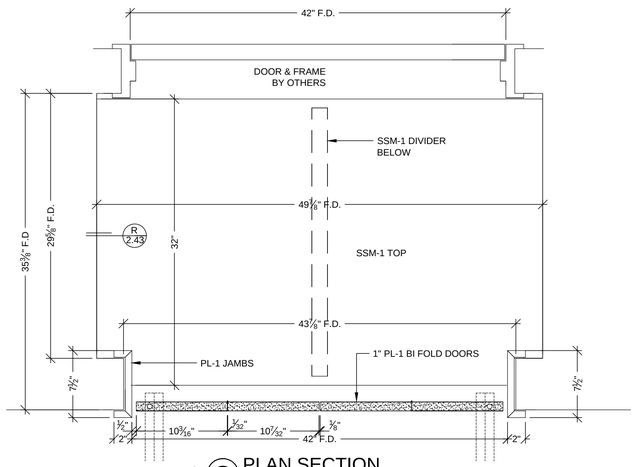

40. Q PLAN SECTION
SCALE: 1 1/2"=12"
REF: A4B/A10.1.2

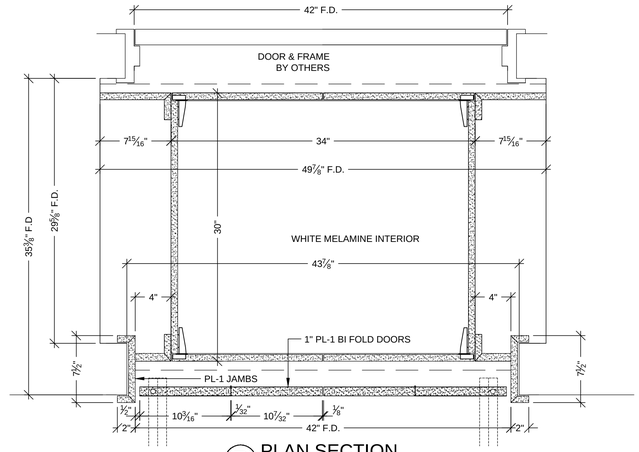

40. P PLAN SECTION
SCALE: 1 1/2"=12"
REF: A4B/A10.1.2

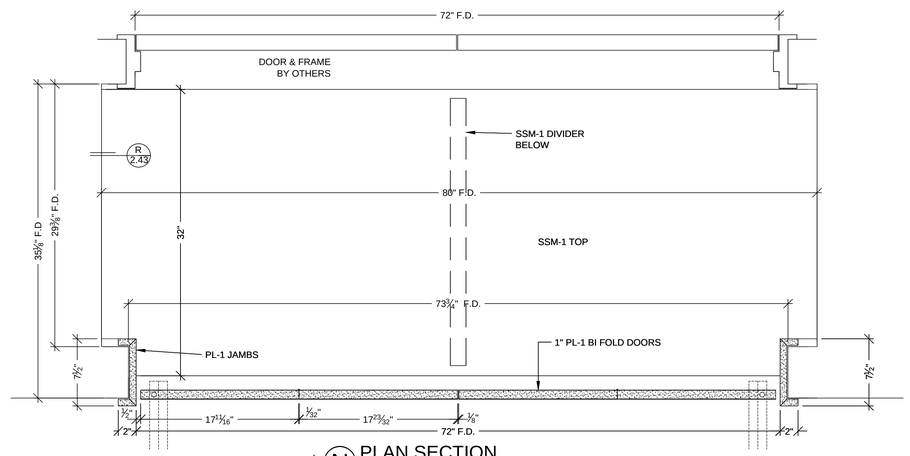

40. N PLAN SECTION
SCALE: 1 1/2"=12"
REF: A4B/A10.1.2

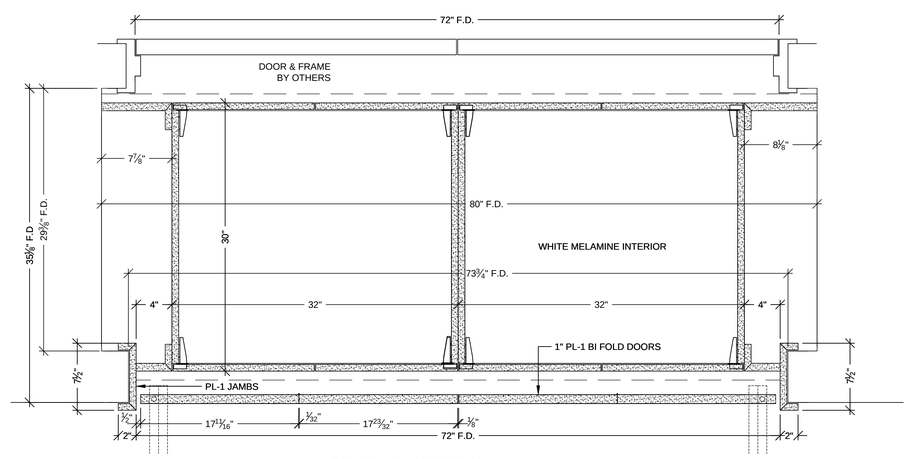

40. M PLAN SECTION
SCALE: 1 1/2"=12"
REF: A4B/A10.1.2

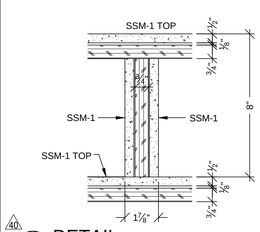

40. S DETAIL
SCALE: 3"=12"
REF: NONE

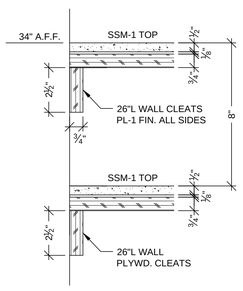

40. R DETAIL
SCALE: 3"=12"
REF: NONE

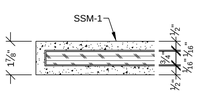

40. T DETAIL
SCALE: 3"=12"
REF: NONE

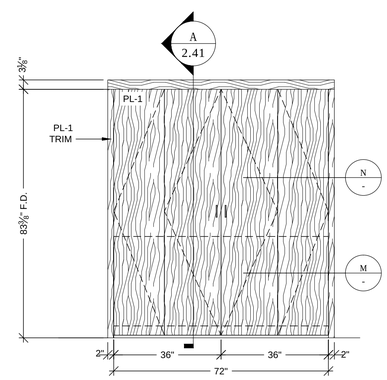

40. 12 ELEVATION
SCALE: 1/2"=12" ROOM: 2.028.02
REF: D6/A9.2D ITEM: 2-141

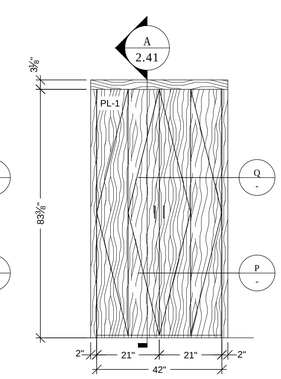

40. 10 ELEVATION
SCALE: 1/2"=12" ROOM: 2.028.02
REF: D6/A9.2D ITEM: 2-140

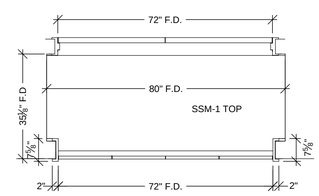

40. 11 FLOOR PLAN
SCALE: 1/2"=12" ROOM: 2.028.02
REF: A4B/A10.1.2 ITEM: 2-141

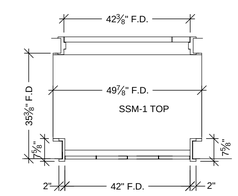

40. 9 FLOOR PLAN
SCALE: 1/2"=12" ROOM: 2.028.02
REF: A4B/A10.1.2 ITEM: 2-140

HARDWARE SCHEDULE

	ITEM	PART NO.	MANUF.	FINISH / COLOR
1	METAL WIRE PULL 4" CTC	MC402-4-A	EPCO	SATIN CLR. ANODIZED
2	METAL SHELF SUPPORT	282.04.711	HAFELE	NICKLE PLATED
3	BLUM HINGE PLATE	B173L810	BLUM	NICKLE PLATED
4	BLUM HINGE (INSERTA)	73T5590 F.O., S.C. , 120	BLUM	NICKLE PLATED
5	FOLDING DOOR HWDE.	1500	GRANT	STEEL / ALUMINUM
6	MAGNETIC CATCH	592	EPCO	ALUMINUM
7				
8				
9				
10				

FINISH SCHEDULE

SSM 1 - SOLID SURFACE - (TOPS)
AVONITE WHITE SANDS K1 6636

PL 1 - PLASTIC LAMINATE - (CABINETS)
WILSONART 10745-60 FONTHILL PEAR MATTE

PLEASE VERIFY THESE FINISHES.

WHITE MELAMINE INTERIORS U.N.O.

WALL SCRIBES TO BE FLUSH WITH CABINET DOORS & DRAWERS.

NO	DATE	REVISION	SUB #	BY
1	12-30-11	PER RED LINE DATED 12-05-11	LK	
2	5-29-12	PER A.S.I. #188 DATED 3-15-12	JB	

PROJECT : CHOC HOSPITAL TOWER II
455 S. MAIN STREET
ORANGE, CA. 92868

FLOOR : SECOND LEVEL
ROOM # : 2.028.02
ITEM : PASS THRU CABINETS & TOP'S
REF : A9.2D, A10.1.2
ITEM # : 2-140,2-141

CONTRACTOR : McCARTHY

ARCHITECT : FKP ARCHITECTS

COPYRIGHT
ALL IDEAS DESIGNS, ARRANGEMENTS AND PLANS INDICATED OR REPRESENTED BY THIS DOCUMENT ARE OWNED BY, AND THE PROPERTY OF P.A.M. AND WERE CREATED,EVOLVED AND DEVELOPED FOR USE ON, AND IN CONNECTION WITH THE SPECIFIED PROJECT. NONE OF SUCH IDEAS, DESIGNS, ARRANGEMENT OF PLANS SHALL BE USED BY OR DISCLOSED TO ANY PERSON, FIRM OR CORPORATION FOR ANY PURPOSE WHATSOEVER WITHOUT THE WRITTEN PERMISSION OF P.A.M.

FIELD VERIFICATION

P.A.M. SHOP DRAWINGS ARE MADE FOR THE EXCLUSIVE USE OF P.A.M. AND ANY OTHER TRADES USING THESE DRAWING USE THEM AT THERE OWN RISK. DIMENSIONS ON THESE DRAWINGS MAY NOT BE ALWAYS NOTED. FIELD CONDITIONS MAY REQUIRE CHANGES IN DIMENSIONS, SO OTHER TRADES USING THESE DRAWINGS MUST TAKE THEIR OWN FIELD DIMENSIONS.

PACIFIC ARCHITECTURAL MILLWORK
1041 LESLIE ST. LA HABRA, CA. 90631
PH: (714) 525-2059 FAX: (714) 525-2673

DATE: 10-28-11
DRAWN BY: JB
SCALE: NOTED
JOB: 3635
SUBMITTAL: 28
DWG: 2.43
SHEET(S):

RELEASE FOR PRODUCTION
SIGNATURE:
DATE:
NOTE: NO CHANGES CAN BE MADE AFTER AUTHORIZATION TO PROCEED.

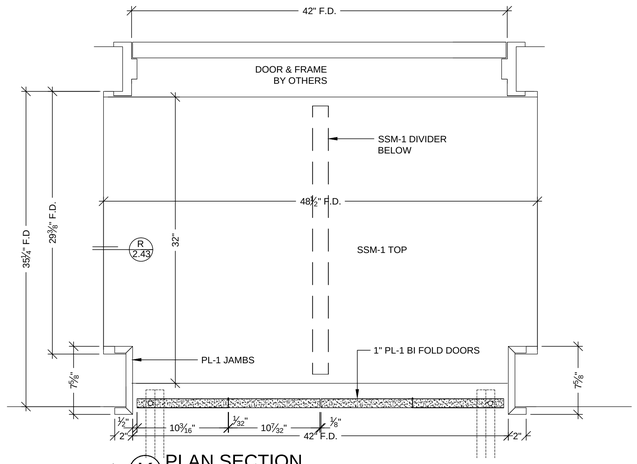

40. K PLAN SECTION
SCALE: 1 1/2"=12"
REF: A4B/A10.1.2

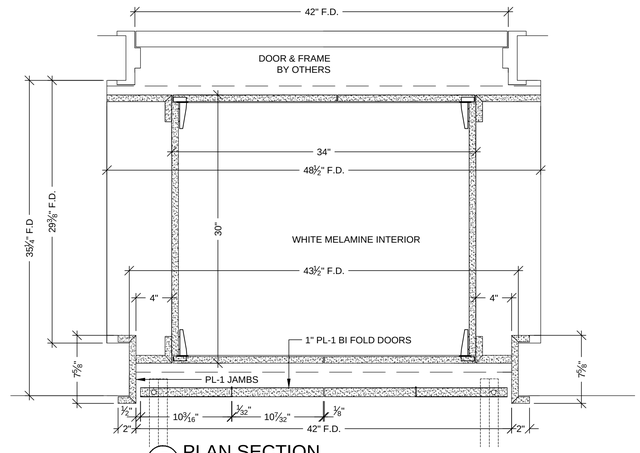

40. J PLAN SECTION
SCALE: 1 1/2"=12"
REF: A4B/A10.1.2

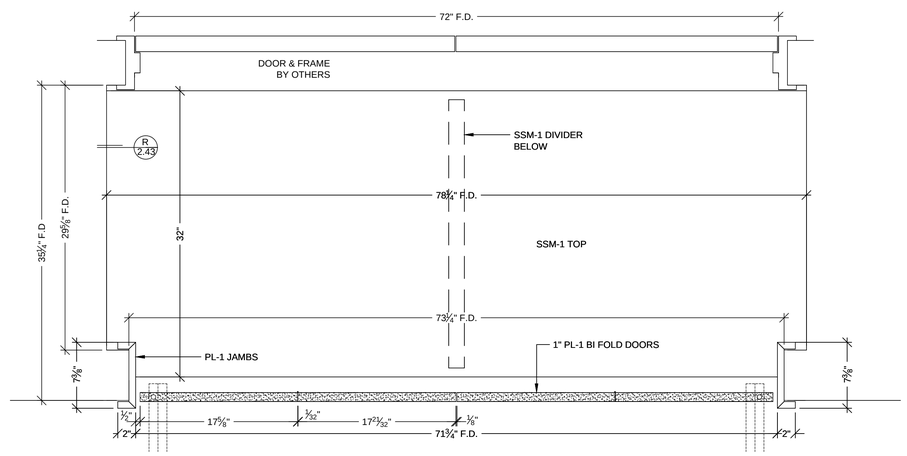

40. H PLAN SECTION
SCALE: 1 1/2"=12"
REF: A4B/A10.1.2

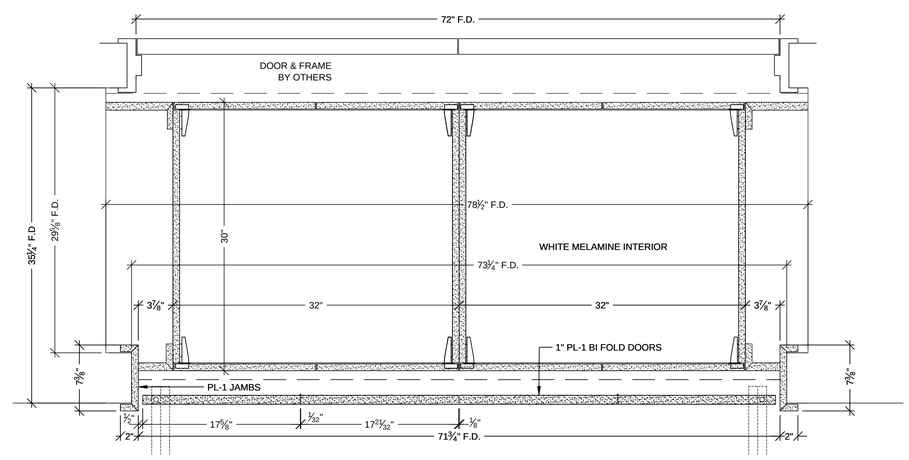

40. G PLAN SECTION
SCALE: 1 1/2"=12"
REF: A4B/A10.1.2

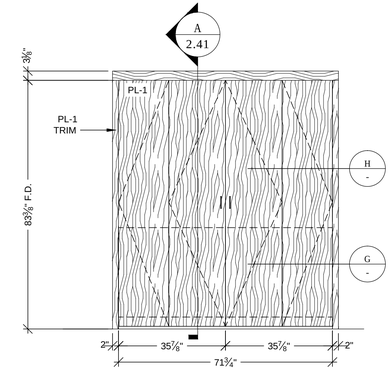

40. 8 ELEVATION
SCALE: 1/2"=12" ROOM: 2.028.06
REF: D6/A9.2D ITEM: 2-139

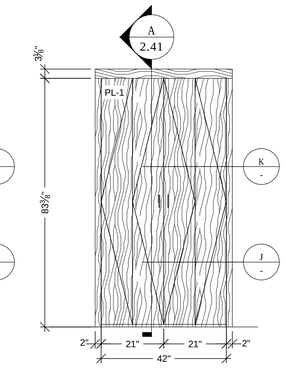

40. 6 ELEVATION
SCALE: 1/2"=12" ROOM: 2.028.06
REF: D6/A9.2D ITEM: 2-138

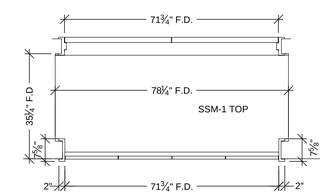

40. 7 FLOOR PLAN
SCALE: 1/2"=12" ROOM: 2.028.06
REF: A4B/A10.1.2 ITEM: 2-139

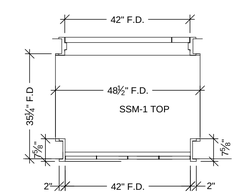

40. 5 FLOOR PLAN
SCALE: 1/2"=12" ROOM: 2.028.06
REF: A4B/A10.1.2 ITEM: 2-138

HARDWARE SCHEDULE

	ITEM	PART NO.	MANUF.	FINISH / COLOR
1	METAL WIRE PULL 4" CTC	MC402-4-A	EPCO	SATIN CLR. ANODIZED
2	METAL SHELF SUPPORT	282.04.711	HAFELE	NICKLE PLATED
3	BLUM HINGE PLATE	B173L810	BLUM	NICKLE PLATED
4	BLUM HINGE (INSERTA)	73T5590 F.O., S.C. , 120	BLUM	NICKLE PLATED
5	FOLDING DOOR HWDE.	1500	GRANT	STEEL / ALUMINUM
6	MAGNETIC CATCH	592	EPCO	ALUMINUM
7				
8				
9				
10				

FINISH SCHEDULE

SSM 1 - SOLID SURFACE - (TOPS)
AVONITE WHITE SANDS K1 6636

PL 1 - PLASTIC LAMINATE - (CABINETS)
WILSONART 10745-60 FONTHILL PEAR MATTE

PLEASE VERIFY THESE FINISHES.

WHITE MELAMINE INTERIORS U.N.O.

WALL SCRIBES TO BE FLUSH WITH CABINET DOORS & DRAWERS.

NO	DATE	REVISION	SUB #	BY
1	12-30-11	PER RED LINE DATED 12-05-11	-	LK
2	5-29-12	PER A.S.I. #188 DATED 3-15-12	-	JB
3			-	
4			-	

PROJECT : CHOC HOSPITAL TOWER II
455 S. MAIN STREET
ORANGE, CA. 92868

FLOOR : SECOND LEVEL
ROOM # : 2.028.06
ITEM : PASS THRU CABINETS & TOPS
REF : A9.2D, A10.1.2
ITEM # 2-138,2-139

CONTRACTOR: McCARTHY

ARCHITECT: FKP ARCHITECTS

COPYRIGHT
ALL IDEAS DESIGNS, ARRANGEMENTS AND PLANS INDICATED OR REPRESENTED BY THIS DRAWING ARE OWNED BY, AND THE PROPERTY OF P.A.M. AND WERE CREATED, EVOLVED AND DEVELOPED FOR USE ON, AND IN CONNECTION WITH THE SPECIFIED PROJECT. NONE OF SUCH IDEAS, DESIGNS, ARRANGEMENT OF PLANS SHALL BE USED BY OR DISCLOSED TO ANY PERSON, FIRM OR CORPORATION FOR ANY PURPOSE WHATSOEVER WITHOUT THE WRITTEN PERMISSION OF P.A.M.

FIELD VERIFICATION
P.A.M. SHOP DRAWINGS ARE MADE FOR THE EXCLUSIVE USE OF P.A.M. AND ANY OTHER TRADES USING THESE DRAWINGS USE THEM AT THERE OWN RISK. DIMENSIONS FOR THESE DRAWINGS MAY NOT BE ALWAYS NOTED, FIELD CONDITIONS MAY VARY FROM THESE DIMENSIONS, SO OTHER TRADES USING THESE DRAWINGS MUST TAKE THEIR OWN FIELD DIMENSIONS.

PACIFIC ARCHITECTURAL MILLWORK
1041 LESLIE ST. LA HABRA, CA. 90631
PH: (714) 525-2059 FAX: (714) 525-2673

DATE: 10-28-11
DRAWN BY: JB SCALE: NOTED
JOB: 3635 SUBMITTAL: 28
DWG: 2.42
SHEET(S):

RELEASE FOR PRODUCTION
SIGNATURE:
DATE:
NOTE: NO CHANGES CAN BE MADE AFTER AUTHORIZATION TO PROCEED.

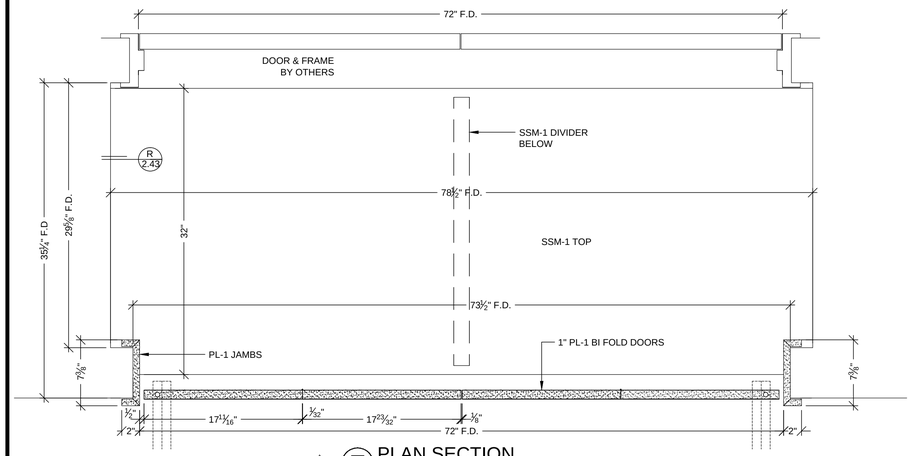

40 E PLAN SECTION
SCALE: 1 1/2"=12"
REF:A4B/A10.1.2

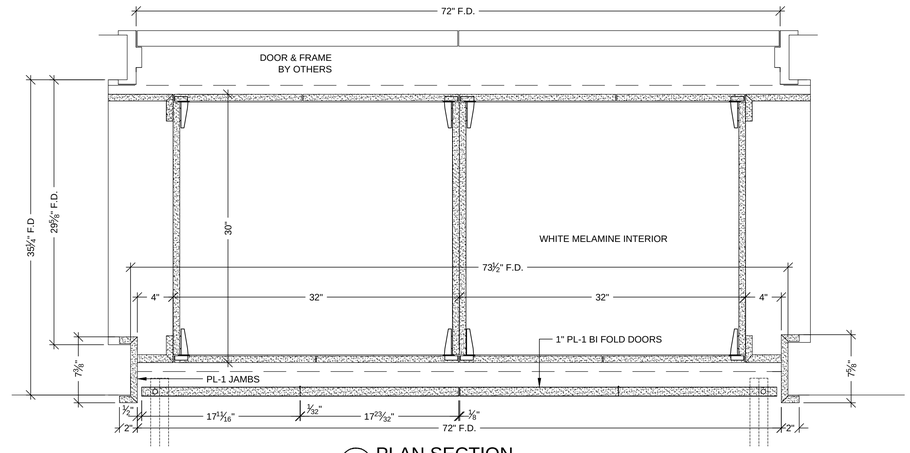

40 D PLAN SECTION
SCALE: 1 1/2"=12"
REF:A4B/A10.1.2

HARDWARE SCHEDULE

	ITEM	PART NO.	MANUF.	FINISH / COLOR
1	METAL WIRE PULL 4" CTC	MC402-4-A	EPCO	SATIN CLR. ANODIZED
2	METAL SHELF SUPPORT	282.04.711	HAFELE	NICKLE PLATED
3	BLUM HINGE PLATE	B173L810	BLUM	NICKLE PLATED
4	BLUM HINGE (INSERTA)	73T5590 F.O., S.C. , 120	BLUM	NICKLE PLATED
5	FOLDING DOOR HDWE.	1500	GRANT	STEEL / ALUMINUM
6	MAGNETIC CATCH	592	EPCO	ALUMINUM
7				
8				
9				
10				

FINISH SCHEDULE

SSM 1 - SOLID SURFACE - (TOPS)
AVONITE WHITE SANDS K1 6636

PL 1 - PLASTIC LAMINATE - (CABINETS)
WILSONART 10745-60 FONTHILL PEAR MATTE

PLEASE VERIFY THESE FINISHES. 28

WHITE MELAMINE INTERIORS U.N.O.

WALL SCRIBES TO BE FLUSH WITH CABINET DOORS & DRAWERS.

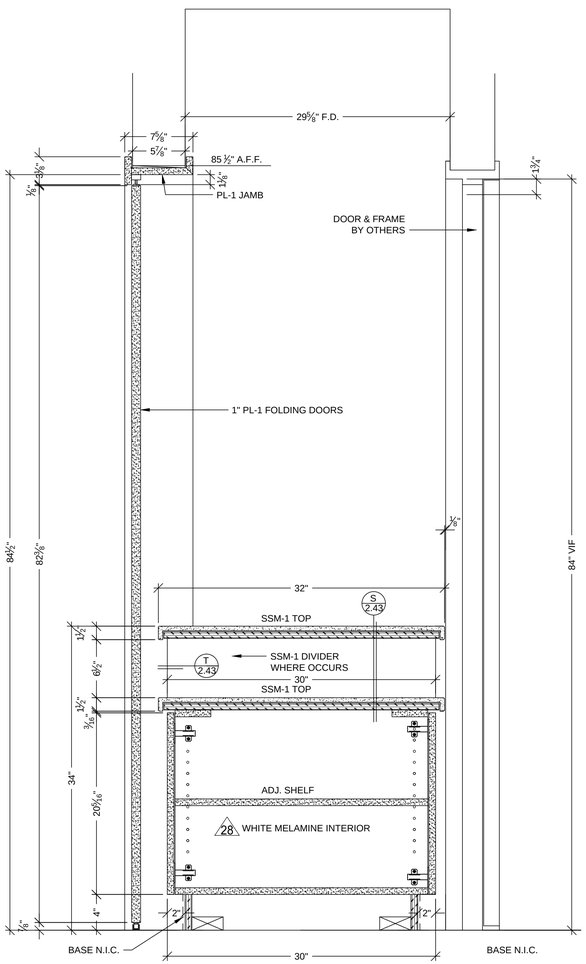

40 A SECTION
SCALE: 1 1/2"=12"
REF:A4/A10.1.2

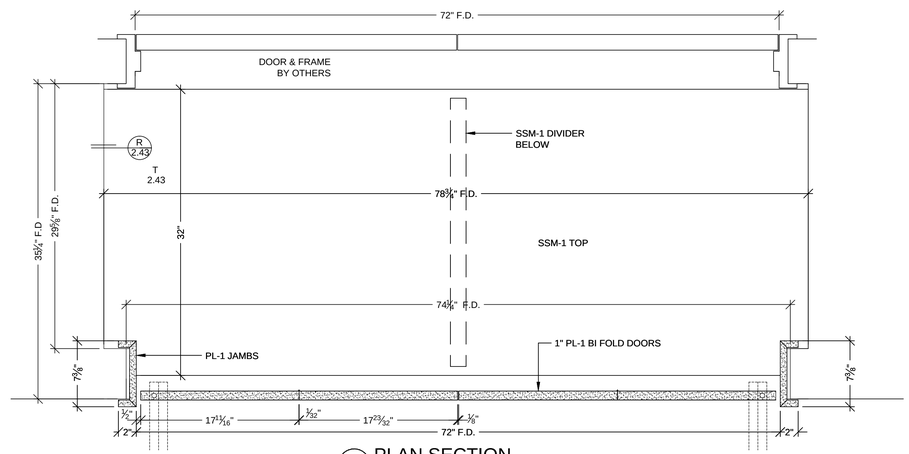

40 C PLAN SECTION
SCALE: 1 1/2"=12"
REF:A4B/A10.1.2

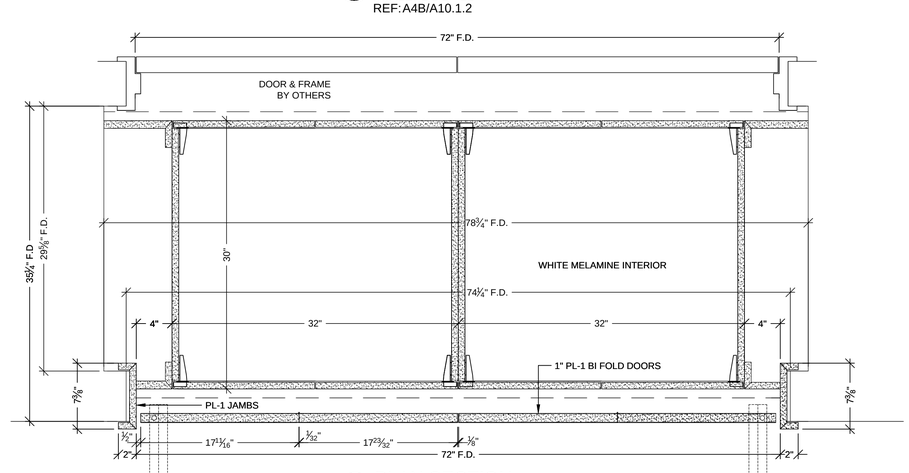

40 B PLAN SECTION
SCALE: 1 1/2"=12"
REF:A4B/A10.1.2

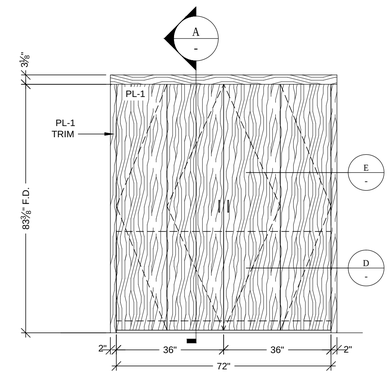

40 4 ELEVATION
SCALE: 1/2"=12" ROOM: 2.028.11
REF:D6/A9.2D ITEM:2-137

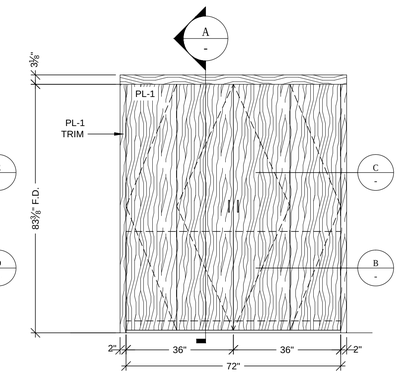

40 4 ELEVATION
SCALE: 1/2"=12" ROOM: 2.028.11
REF:D6/A9.2D ITEM:2-136

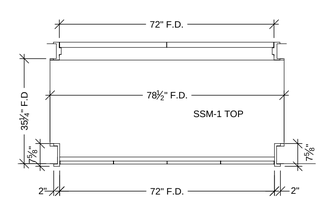

40 3 FLOOR PLAN
SCALE: 1/2"=12" ROOM: 2.028.11
REF:A4B/A10.1.2 ITEM:2-137

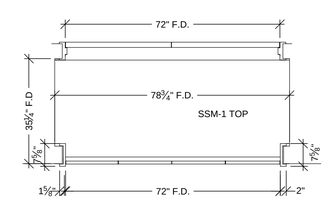

40 3 FLOOR PLAN
SCALE: 1/2"=12" ROOM: 2.028.11
REF:A4B/A10.1.2 ITEM:2-137

RELEASE FOR PRODUCTION
SIGNATURE: _____
DATE: _____
NOTE: NO CHANGES CAN BE MADE AFTER AUTHORIZATION TO PROCEED.

NO	DATE	REVISION	SUB #	BY
1	12-30-11	PER RED LINE DATED 12-05-11	X	LK
2	5-29-12	PER A.S.I. #188 DATED 3-15-12		JB
3				
4				

PROJECT : CHOC HOSPITAL TOWER II
455 S. MAIN STREET
ORANGE, CA. 92868

FLOOR : SECOND LEVEL
ROOM # : 2.028.11
ITEM : PASS THRU CABINET'S W/ TOP'S
REF : A9.2D,A10.1.2
ITEM #: 2-136,2-137

ARCHITECT : FKP ARCHITECTS
CONTRACTOR : McCARTHY

COPYRIGHT
ALL IDEAS DESIGNS, ARRANGEMENTS AND PLANS INDICATED OR REPRESENTED BY THIS DRAWING ARE OWNED BY, AND THE PROPERTY OF P.A.M. AND WERE CREATED,EVOLVED AND DEVELOPED FOR USE ON, AND IN CONECTION WITH THE SPECIFIED PROJECT. NONE OF SUCH IDEAS, DESIGNS, ARRANGEMENT OF PLANS SHALL BE USED BY OR DISCLOSED TO ANY PERSON, FIRM OR CORPORATION FOR ANY PURPOSE WHATSOEVER WITHOUT THE WRITTEN PERMISSION OF P.A.M.

FIELD VERIFICATION
P.A.M. SHOP DRAWINGS ARE MADE FOR THE EXCLUSIVE USE OF P.A.M. AND ANY OTHER TRADES USING THESE DRAWING USE THEM AT THERE OWN RISK. DIMENSIONS ON THESE DRAWINGS MAY NOT BE ALWAYS NOTED, FIELD CONDITIONS MAY REQUIRE CHANGES IN DIMENSIONS, SO OTHER TRADES USING THESE DRAWINGS MUST TAKE THEIR OWN FIELD DIMENSIONS.

PACIFIC ARCHITECTURAL MILLWORK
1041 LESLIE ST. LA HABRA, CA. 90631
PH: (714) 525-2059 FAX: (714) 525-2673

DATE: 10-28-11
DRAWN BY: JB
SCALE: NOTED
JOB: 3635
SUBMITTAL: 28
DWG: 2.41
SHEET(S):

HARDWARE SCHEDULE

	ITEM	PART NO.	MANUF.	FINISH / COLOR
1	METAL WIRE PULL 4" CTC	MC402-4-A	EPCO	SATIN CLR. ANODIZED
2	METAL SHELF SUPPORT	282.04.711	HAFELE	NICKLE PLATED
3	BLUM HINGE PLATE	B173L810	BLUM	NICKLE PLATED
4	BLUM HINGE (INSERTA)	73T5590 F.O., S.C. , 120	BLUM	NICKLE PLATED
5	DRAWER SLIDES	AC7432-18 (100LBS)	ACCURIDE	ZINC
6	STANDOFFS	MPB10/2-94	MOCKETT	SATIN ALUMINUM
7	STANDOFF CAPS	MPB10/CAP1	MOCKETT	SATIN ALUMINUM
8	STANDOFF SCREWS	MPB-HD-S24 2" LONG	MOCKETT	STEEL
9	STANDOFF HANGER BOLTS	MPB-HB WHS3 1 1/2" LONG	MOCKETT	STEEL
10	GROMMETS	DGEDP-3BK 2 1/2" HOLE	MOCKETT	BLACK PLASTIC
11	STAINLESS STEEL CHANNEL	SS954	CRL	ZINC

FINISH SCHEDULE

SSM 11 - SOLID SURFACE - (TOPS)
SILESTONE IVORY COAST #8 POLISHED

AW 1 - VENEER - (CABINETS)
P.S. CHERRY (BOOKMATCHED) TO MATCH ARCH. SAMPLE

GLASS TOP: 1" TEMPERED FULL BULLNOSED EDGES
ETCHED BOTTOM & POLISHED TOP

STAINLESS BASE: 18 GA. #4 FINISH

WHITE MELAMINE INTERIORS U.N.O.

ALL VENEER WIL BE ON 3/4" PARTICLE BOARD (NAUF) INSTEAD OF PRESSURE TREATED PLYWOOD.

WALL SCRIBES TO BE FLUSH WITH CABINET DOORS & DRAWERS.

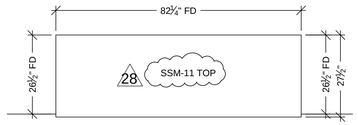

7 PLAN VIEW
SCALE: 1/2" = 12" REF: A3.2F
ROOM: ITEM: 2-143

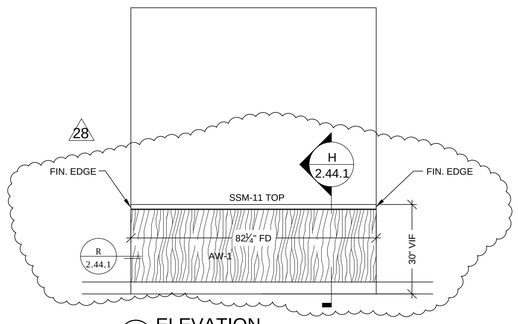

8 ELEVATION
SCALE: 1/2"=12" ROOM: 2.113.20
REF: A4/A9.2C ITEM: 2-143

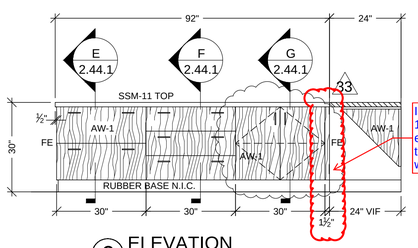

Is this an applied 1 1/2" finished end? Currently the cabinet is white melamine

6 ELEVATION
SCALE: 1/2"=12" ROOM: 2.113.20
REF: A9.0 ITEM: 2-142

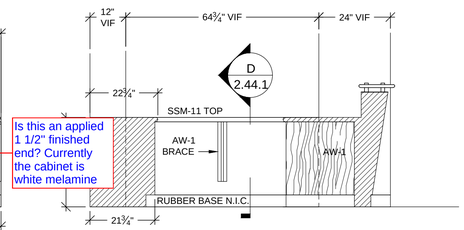

5 ELEVATION
SCALE: 1/2"=12" ROOM: 2.113.20
REF: NONE ITEM: 2-142

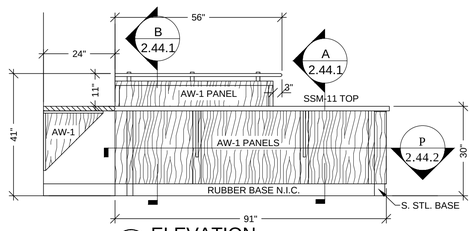

4 ELEVATION
SCALE: 1/2"=12" ROOM: 2.113.20
REF: NONE ITEM: 2-142

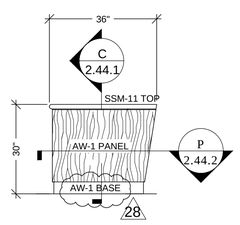

3 ELEVATION
SCALE: 1/2"=12" ROOM: 2.113.20
REF: NONE ITEM: 2-142

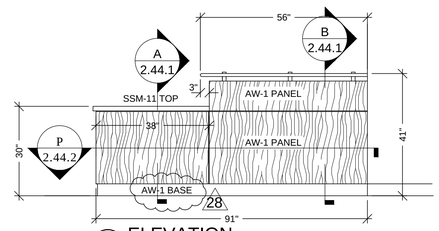

2 ELEVATION
SCALE: 1/2"=12" ROOM: 2.113.20
REF: A3/A9.2C ITEM: 2-142

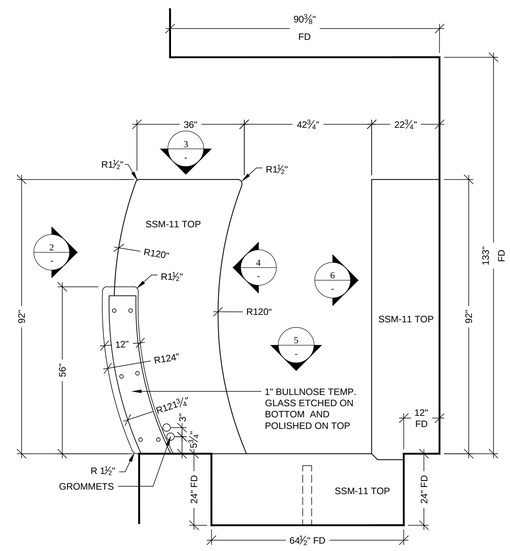

1 FLOOR PLAN
SCALE: 1/2"=12" ROOM: 2.113.20
REF: A3/A10.1.2 ITEM: 2-142

RELEASE FOR PRODUCTION
SIGNATURE: _____
DATE: _____
NOTE: NO CHANGES CAN BE MADE AFTER AUTHORIZATION TO PROCEED.

NO	DATE	REVISION	SUB #	BY
1				X
2				
3				
4	12-30-11	PER RED LINE DATED 12/05-11		JB
5	2-24-12	PER RFI #5277-0 DATED 2-14-12		JB
6	2-29-12	FIELD DIMENSIONS		MW

PROJECT : CHOC HOSPITAL TOWER II
455 S. MAIN STREET ORANGE, CA. 92868

FLOOR : SECOND LEVEL
ROOM # : 2.113.20
ITEM : RECEPTION DESK & WAITING COUNTER
REF : A3.A4/A9.2C, A10.1.2
ITEM #- 2-142,2-143

ARCHITECT : FKP ARCHITECTS
CONTRACTOR : McCARTHY

COPYRIGHT
ALL IDEAS DESIGNS, ARRANGEMENTS AND PLANS INDICATED OR REPRESENTED BY THIS DRAWING ARE THE PROPERTY OF P.A.M. ARCHITECTURAL MILLWORK. THEY WERE CREATED, EVOLVED AND DEVELOPED FOR USE ON, AND IN CONNECTION WITH THE SPECIFIED PROJECT. NONE OF SUCH IDEAS, DESIGNS, ARRANGEMENT OF PLANS SHALL BE USED BY OR DISCLOSED TO ANY PERSON, FIRM OR CORPORATION FOR ANY PURPOSE WHATSOEVER WITHOUT THE WRITTEN PERMISSION OF P.A.M.

FIELD VERIFICATION

P.A.M. SHOP DRAWINGS ARE MADE FOR THE EXCLUSIVE USE OF P.A.M. AND ANY OTHER TRADES USING THESE DRAWINGS USE THEM AT THEIR OWN RISK. DIMENSIONS ARE TAKEN FROM PLANS AND ARE APPROXIMATE. FIELD CONDITIONS MAY REQUIRE CHANGES IN DIMENSIONS, SO OTHER TRADES USING THESE DRAWINGS MUST TAKE THEIR OWN FIELD DIMENSIONS.

PACIFIC ARCHITECTURAL MILLWORK
1041 LESLIE ST. LA HABRA, CA. 90631
PH: (714) 525-2059 FAX: (714) 525-2673

DATE: 10-28-11
DRAWN BY: JB SCALE: NOTED
JOB: 3635 SUBMITTAL: 28
DWG: 2.44
SHEET(S):

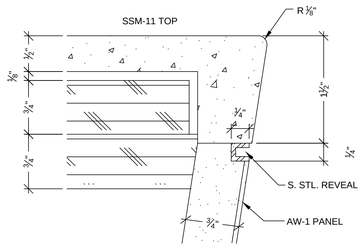

J DETAIL
SCALE: FULL
REF:A1,C1/A10.1.2

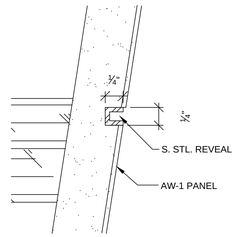

K DETAIL
SCALE: FULL
REF:A1,C1/A10.1.2

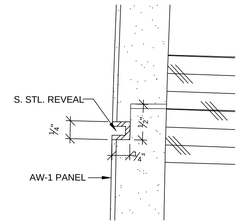

L DETAIL
SCALE: FULL
REF:A1,C1/A10.1.2

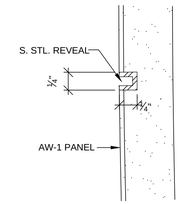

M DETAIL
SCALE: FULL
REF:A1,C1/A10.1.2

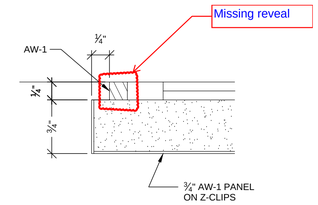

R DETAIL
SCALE: FULL
REF:NONE

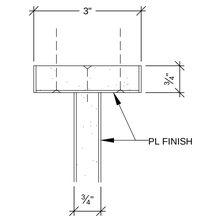

N PLAN SECTION
SCALE: 6" = 1'- 0"
ARCH. REF: A9.0

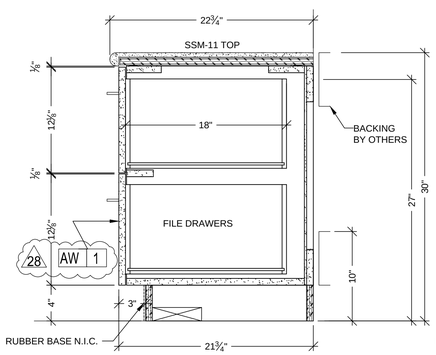

E VERTICAL SECTION
SCALE: 1 1/2" = 1'- 0"
ARCH. REF: A9.0

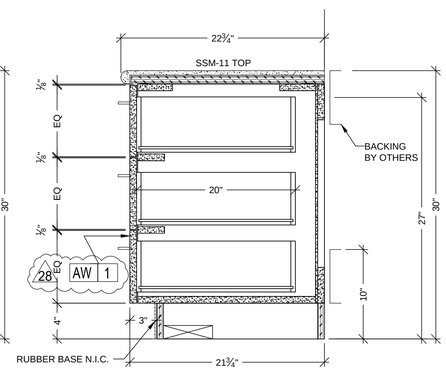

F VERTICAL SECTION
SCALE: 1 1/2" = 1'- 0"
ARCH. REF: A9.0

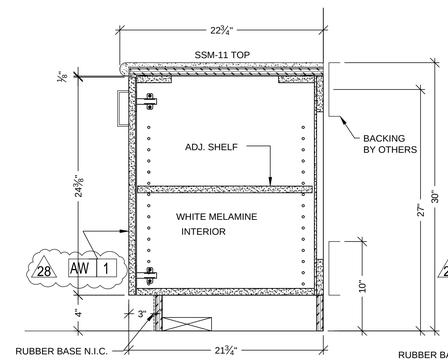

G VERTICAL SECTION
SCALE: 1 1/2" = 1'- 0"
ARCH. REF: A9.0

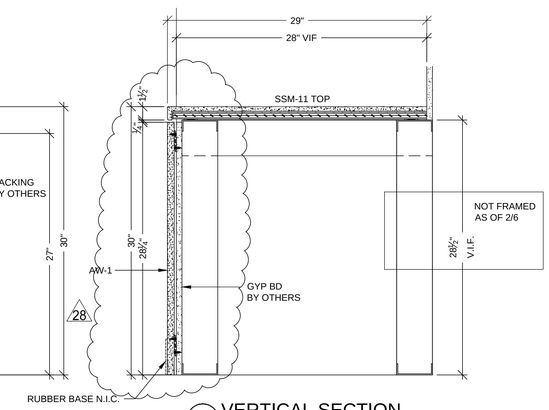

H VERTICAL SECTION
SCALE: 1 1/2" = 1'- 0"
ARCH. REF: NONE

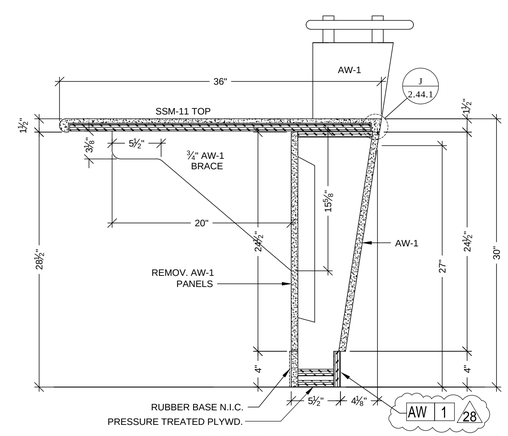

A SECTION
SCALE: 1 1/2"=12"
REF:C1/A10.1.2

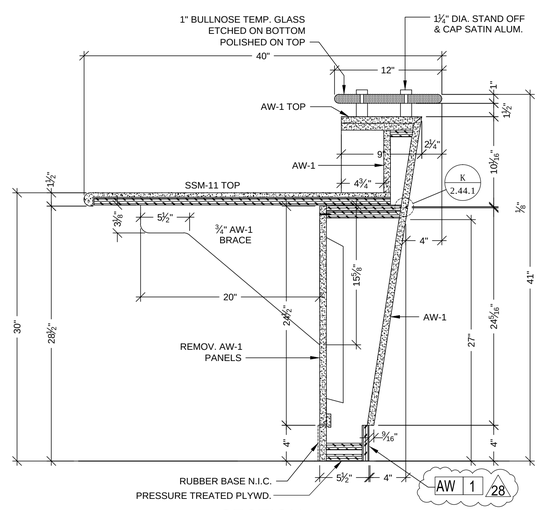

B SECTION
SCALE: 1 1/2"=12"
REF:A1/A10.1.2

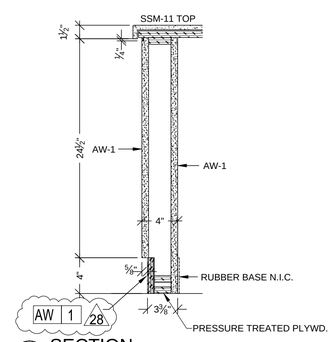

C SECTION
SCALE: 1 1/2"=12"
REF:A1/A10.1.2

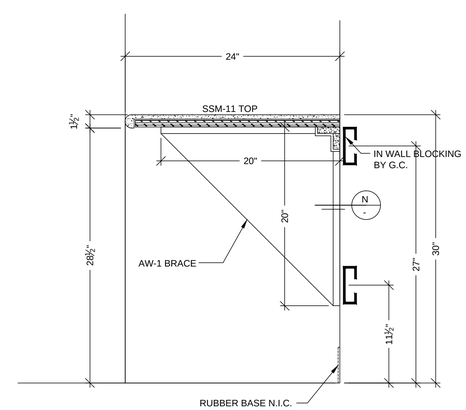

D VERTICAL SECTION
SCALE: 1 1/2" = 1'- 0"
ARCH. REF: A9.0

RELEASE FOR PRODUCTION
SIGNATURE: _____
DATE: _____
NOTE: NO CHANGES CAN BE MADE AFTER AUTHORIZATION TO PROCEED.

NO	DATE	REVISION	SUB #	BY
1				X
2				
3	12-30-11	PER RFI 1 LINE DATED 12-05-11		LK
28				
	2-29-12	FIELD DIMENSIONS		MW

PROJECT :
CHOC HOSPITAL
TOWER II
455 S. MAIN STREET
ORANGE, CA. 92868

FLOOR : SECOND LEVEL
ROOM # : 2.113.20
ITEM : RECEPTION DESK & WAITING COUNTER
REF : A3,A4/A9.2C, A10.1.2
ITEM # : 2-142,2-143

CONTRACTOR : McCARTHY

ARCHITECT : FKP ARCHITECTS

COPYRIGHT
ALL IDEAS DESIGNS, ARRANGEMENTS AND PLANS INDICATED OR REPRESENTED BY THIS DRAWING ARE OWNED BY, AND THE PROPERTY OF P.A.M. AND WERE CREATED,EVOLVED AND DEVELOPED FOR USE ON, AND PRIMARILY FOR USE WITH THIS PROJECT. NONE OF SUCH IDEAS, DESIGNS, ARRANGEMENT OF PLANS SHALL BE USED BY OR DISCLOSED TO ANY PERSON, FIRM OR CORPORATION FOR ANY PURPOSE WHATSOEVER WITHOUT THE WRITTEN PERMISSION OF P.A.M.

FIELD VERIFICATION
P.A.M. SHOP DRAWINGS ARE MADE FOR THE EXCLUSIVE USE OF P.A.M. AND ANY OTHER TRADES USING THESE DRAWING USE THEM AT THERE OWN RISK. DIMENSIONS MUST BE VERIFIED AND ADJUSTED AS REQUIRED. FIELD CONDITIONS MAY REQUIRE CHANGES IN DIMENSIONS, SO OTHER TRADES USING THESE DRAWINGS MUST TAKE THEIR OWN FIELD DIMENSIONS.

PACIFIC ARCHITECTURAL MILLWORK
104 LESLIE ST. LA HABRA, CA. 90631
PH: (714) 525-2059 FAX: (714) 525-2673

DATE: 10-28-11
DRAWN BY: JB
SCALE: NOTED
JOB: 3635
SUBMITTAL: 28
DWG: 2.44.1
SHEET(S):

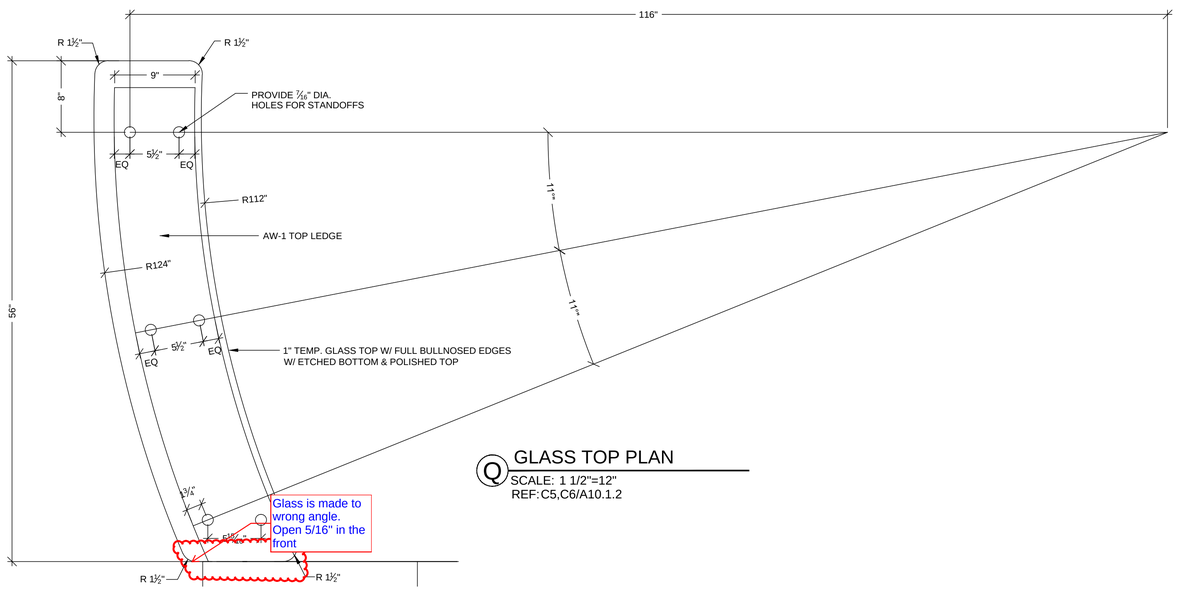

Q GLASS TOP PLAN

SCALE: 1 1/2"=12"
REF: C5,C6/A10.1.2

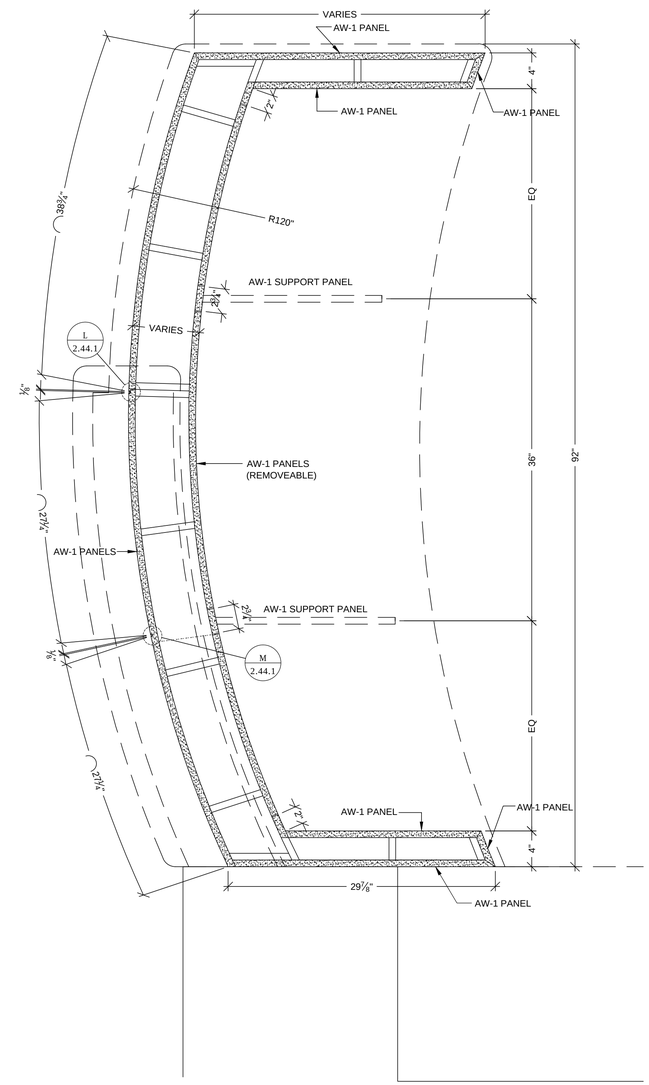

P PLAN SECTION

SCALE: 1 1/2"=12"
REF: NONE

RELEASE FOR PRODUCTION
SIGNATURE: _____
DATE: _____
NOTE: NO CHANGES CAN BE MADE AFTER AUTHORIZATION TO PROCEED.

NO	DATE	REVISION	SUB #	BY
1				X
2				
3				
4				
5				
6	2-29-12	FIELD DIMENSIONS		MW

PROJECT :
CHOC HOSPITAL
TOWER II
455 S. MAIN STREET
ORANGE, CA. 92868

FLOOR : SECOND LEVEL
ROOM # : 2.113.20
ITEM : RECEPTION DESK & WAITING COUNTER
REF : A3.A4/A9.2C, A10.1.2
ITEM #: 2-142,2-143

CONTRACTOR :
McCARTHY

ARCHITECT :
FKP ARCHITECTS

COPYRIGHT
ALL IDEAS DESIGNS, ARRANGEMENTS AND PLANS INDICATED OR REPRESENTED BY THIS DRAWING ARE OWNED BY, AND THE PROPERTY OF P.A.M. AND WERE CREATED,EVOLVED AND DEVELOPED FOR USE ON, AND IN CONJECTION WITH THE SPECIFIED PROJECT. NONE OF SUCH IDEAS, DESIGNS, ARRANGEMENT OF PLANS SHALL BE USED BY OR DISCLOSED TO ANY PERSON, FIRM OR CORPORATION FOR ANY PURPOSE WHATSOEVER WITHOUT THE WRITTEN PERMISSION OF P.A.M.

FIELD VERIFICATION
P.A.M. SHOP DRAWINGS ARE MADE FOR THE EXCLUSIVE USE OF P.A.M. AND ANY OTHER TRADES USING THESE DRAWING USE THEM AT THERE OWN RISK. DIMENSIONS ON THESE DRAWINGS MAY NOT BE ALWAYS NOTED, FIELD CONDITIONS MAY REQUIRE CHANGES IN DIMENSIONS, SO OTHER TRADES USING THESE DRAWINGS MUST TAKE THEIR OWN FIELD DIMENSIONS.

PACIFIC
ARCHITECTURAL MILLWORK
1041 LESLIE ST. LA HABRA, CA. 90631
PH: (714) 525-2059 FAX: (714) 525-2673

DATE: 10-28-11
DRAWN BY: JB
SCALE: NOTED
JOB: 3635
SUBMITTAL: 28
DWG: 2.44.2
SHEET(S):

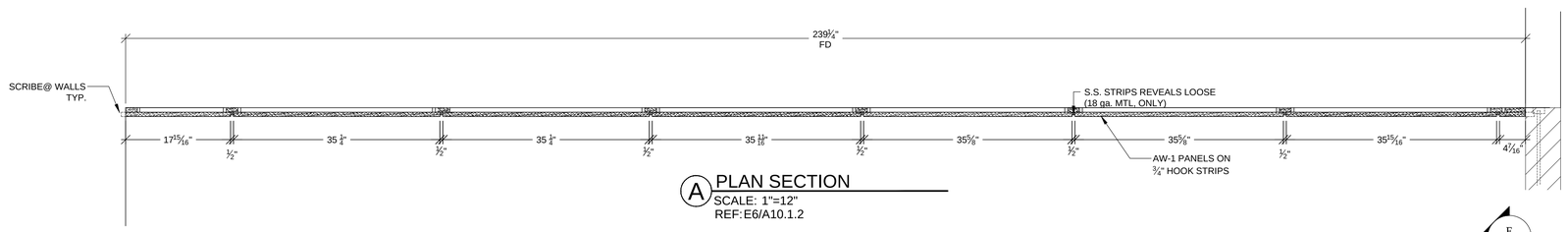

A PLAN SECTION
SCALE: 1"=12"
REF: E6/A10.1.2

PHASE J07

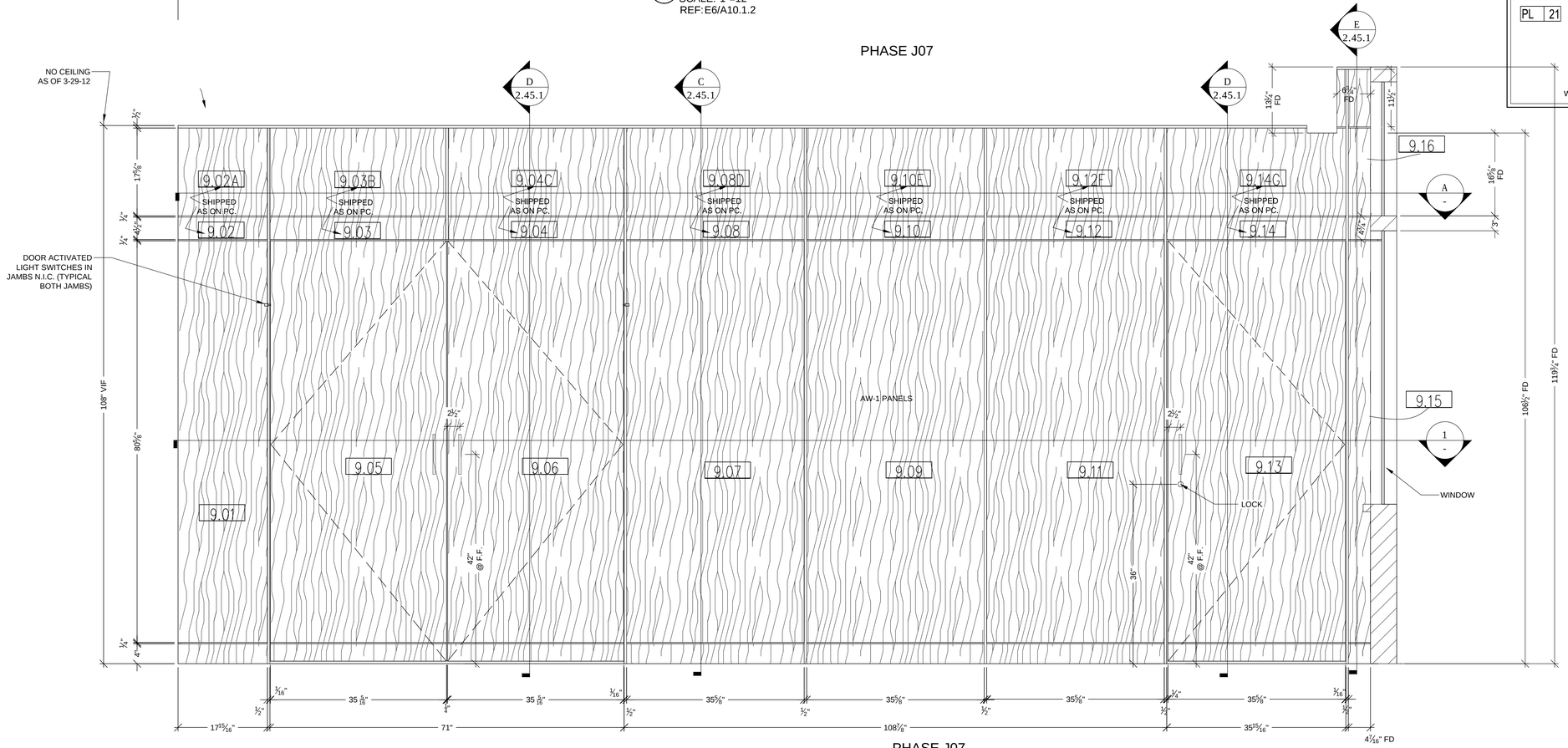

PHASE J07

2 ELEVATION
SCALE: 1"=12" ROOM: 2.113.07
REF: A5/A9.2D ITEM: 2-144

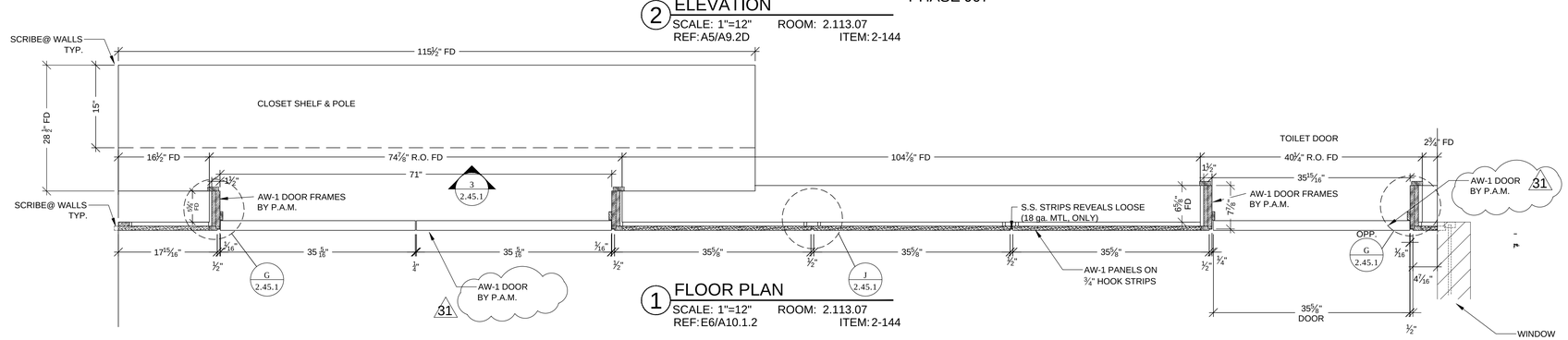

1 FLOOR PLAN
SCALE: 1"=12" ROOM: 2.113.07
REF: E6/A10.1.2 ITEM: 2-144

HARDWARE SCHEDULE

	ITEM	PART NO.	MANUF.	FINISH / COLOR
1	CLOSET POLE	770 5	KV	CHROME
2	POLE FLANGES	764	KV	CHROME
3	DOOR SPRING HINGES	2181C	SOSS	SATIN CHROME
4	PULLS	109.85.005	HAF	STAINLESS STEEL
5	DEAD BOLT (TOILET DOOR)	B800	SC	626
6	DOOR STOP (TOILET DOOR)	1407	DJ	630
7	DOOR SILENCER (TOILET DOOR)	1608	DJ	GRAY
8				
9				
10				
11				

FINISH SCHEDULE

AW 1 - VENEER/SOLID - (WALL PANELS ON FR-MDF CORE/BASE)
P.S. CHERRY (BOOKMATCHED) TO MATCH ARCH. SAMPLE

PL 21 - PLASTIC LAMINATE - (SHELF)
WILSONART 7936K-07 WILLIAMSBURG CHERRY TEXTURED GLOSS

WHITE MELAMINE INTERIORS U.N.O.

DATE	NO	REVISION	SUB #	BY
2-13-12	1	PER R.L.C. DATED 12-19-11		JB
	2			
	3			
	4			
	5			
3-29-12		PER F.D.		JJA
5-01-2012		J07 RELEASED TO SHOP PER APPROVED DRAWINGS & FD		JJA

PROJECT :
CHOC HOSPITAL TOWER II
455 S. MAIN STREET ORANGE, CA. 92868

FLOOR : SECOND LEVEL
ROOM # : 2.113.07
ITEM : WALL PANELS
REF : -
ITEM # : 2-144,2-145

CONTRACTOR: McCARTHY

ARCHITECT : FKP ARCHITECTS

COPYRIGHT
ALL IDEAS DESIGNS, ARRANGEMENTS AND PLANS INDICATED OR REPRESENTED BY THIS DRAWING ARE THE PROPERTY OF PACIFIC MILLWORK. THEY WERE CREATED,EVOLVED AND DEVELOPED FOR USE ON, AND IN CONECTION WITH THE SPECIFIED PROJECT. NONE OF SUCH IDEAS, DESIGNS, ARRANGEMENT OF PLANS SHALL BE USED BY OR DISCLOSED TO ANY PERSON, FIRM OR CORPORATION FOR ANY PURPOSE WHATSOEVER WITHOUT THE WRITTEN PERMISSION OF P.A.M.

FIELD VERIFICATION
F.A.M. SHOP DRAWINGS ARE MADE FOR THE EXCLUSIVE USE OF THE PARTIES LISTED ABOVE. THEY ARE FOR DRAWING USE THEM AT THERE OWN RISK. DIMENSIONS ON THESE DRAWINGS MAY NOT BE ALWAYS NOTED. FIELD CONDITIONS MAY REQUIRE CHANGES IN DIMENSIONS, SO OTHER TRADES USING THESE DRAWINGS MUST TAKE THEIR OWN FIELD DIMENSIONS.

PACIFIC ARCHITECTURAL MILLWORK
1041 LESLIE ST.,LA HABRA, CA. 90631
PH: (714) 525-2059 FAX: (714) 525-2673

DATE: 10-28-11
DRAWN BY: JB SCALE: NOTED
JOB: 3635 SUBMITTAL: 28
DWG: 2.45
J07 SHEET(S)

RELEASE FOR PRODUCTION
SIGNATURE: _____
DATE: _____
NOTE: NO CHANGES CAN BE MADE AFTER AUTHORIZATION TO PROCEED.

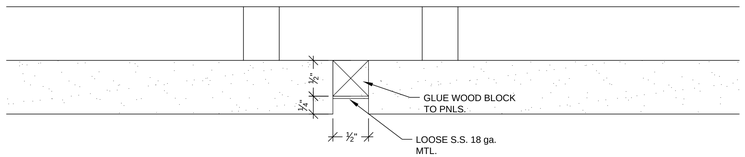

J PLAN SECTION
SCALE: FULL SIZE

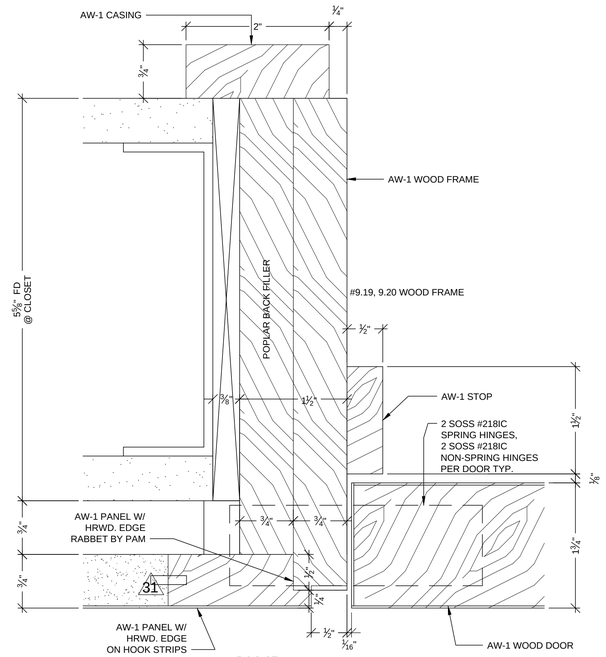

G JAMB
SCALE: FULL
REF:NONE

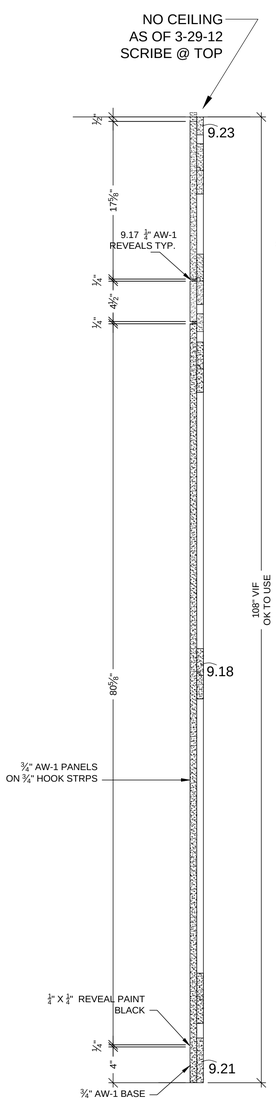

C SECTION
SCALE: 1 1/2"=12"
REF:NONE

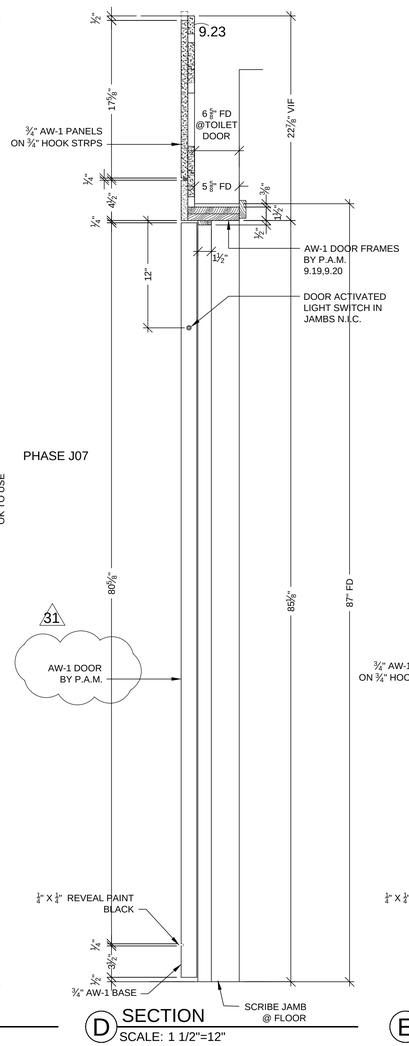

D SECTION
SCALE: 1 1/2"=12"
REF:NONE

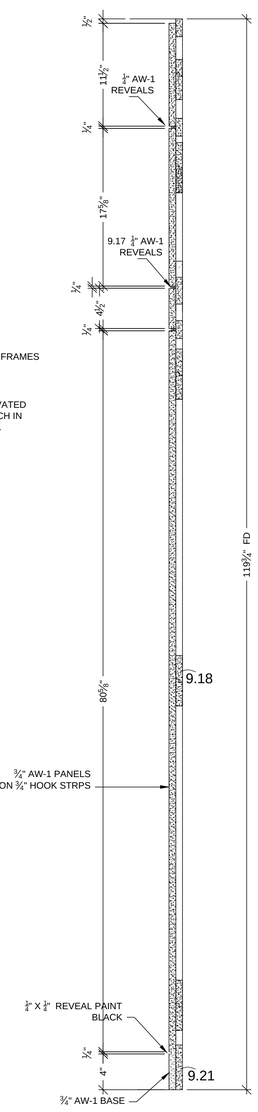

E SECTION
SCALE: 1 1/2"=12"
REF:NONE

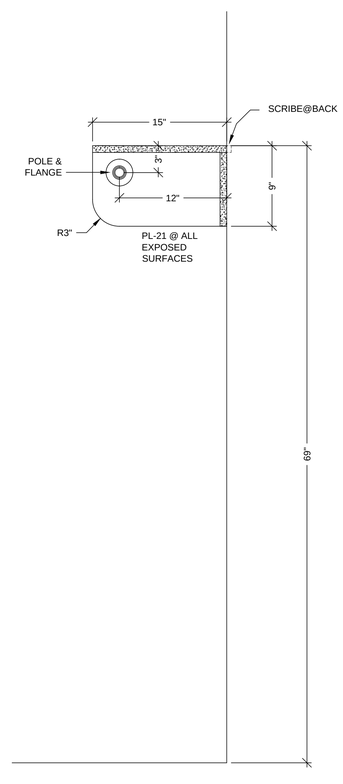

F SECTION
SCALE: 1 1/2"=12"
REF:NONE

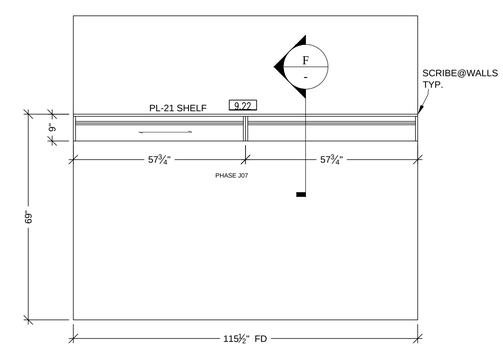

3 ELEVATION
SCALE: 1/2"=12" ROOM: 2.113.07
REF:NONE ITEM:2-145

RELEASE FOR PRODUCTION
SIGNATURE:
DATE:
NOTE: NO CHANGES CAN BE MADE AFTER AUTHORIZATION TO PROCEED.

DATE	NO	REVISION	SIZE #	BY
2-13-12	1	PER R.L.C. DATED 12-19-11	–	JB
3-29-12	2	PER F.D. /SOSS HINGES	–	JJA
–	3		–	
–	4		–	
–	5		–	
–	6		–	
5-01-2012		J07 RELEASED TO SHOP PER APPROVED DRAWINGS & FD	–	JJA

PROJECT :
CHOC HOSPITAL
TOWER II
455 S. MAIN STREET
ORANGE, CA. 92868

FLOOR : SECOND LEVEL
ROOM # : 2.113.07
ITEM : WALL PANELS
REF : A3.A4/A9.2C, A10.1.2
ITEM # : 2-144,2-145

ARCHITECT :
FKP ARCHITECTS

CONTRACTOR :
McCARTHY

COPYRIGHT
ALL IDEAS DESIGNS, ARRANGEMENTS AND PLANS INDICATED OR REPRESENTED BY THIS DRAWING ARE OWNED BY, AND THE PROPERTY OF P.A.M. AND WERE CREATED,EVOLVED AND DEVELOPED FOR USE ON, AND IN CONECTION WITH THE SPECIFIED PROJECT. NONE OF SUCH IDEAS, DESIGNS, ARRANGEMENT OF PLANS SHALL BE USED BY OR DISCLOSED TO ANY PERSON, FIRM OR CORPORATION FOR ANY PURPOSE WHATSOEVER WITHOUT THE WRITTEN PERMISSION OF P.A.M.

FIELD VERIFICATION
P.A.M. SHOP DRAWINGS ARE MADE FOR THE EXCLUSIVE USE OF P.A.M. AND ANY OTHER TRADES USING THESE DRAWING USE THEM AT THERE OWN RISK. DIMENSIONS ON THESE DRAWINGS MAY NOT BE ALWAYS NOTED, FIELD CONDITIONS MAY REQUIRE CHANGES IN DIMENSIONS, SO OTHER TRADES USING THESE DRAWINGS MUST TAKE THEIR OWN FIELD DIMENSIONS.

PACIFIC ARCHITECTURAL MILLWORK
1041 LESLIE ST LA HABRA, CA. 90631
PH: (714) 525-2059 FAX: (714) 525-2673

DATE: 10-28-11	
DRAWN BY: JB	SCALE: NOTED
JOB: 3635	SUBMITTAL: 28
DWG: 2.45.1	
J07	SHEET(S):

HARDWARE SCHEDULE

	ITEM	PART NO.	MANUF.	FINISH / COLOR
1	METAL WIRE PULL 4" CTC	MC402-4-A	EPCO	SATIN CLR. ANODIZED
2	METAL SHELF SUPPORT	282.04.711	HAFELE	NICKLE PLATED
3	BLUM HINGE PLATE	B173L810	BLUM	NICKLE PLATED
4	BLUM HINGE (INSERTA)	73T5590 F.O., S.C. , 120	BLUM	NICKLE PLATED
5	DRAWER SLIDES	AC7432-20 (100LBS)	ACCURIDE	ZINC
6				
7				
8				
9				
10				
11				

FINISH SCHEDULE

SSM 11 - SOLID SURFACE TOPS
SILESTONE IVORY COAST #8 POLISHED

PL 21 - PLASTIC LAMINATE - (CABINETS)
WILSONART 7936K-07 WILLIAMSBURG CHERRY TEXTURED GLOSS

WHITE MELAMINE INTERIORS U.N.O. 31

WALL SCRIBES/FILLERS TO BE FLUSH WITH CABINET DOORS & DRAWERS.

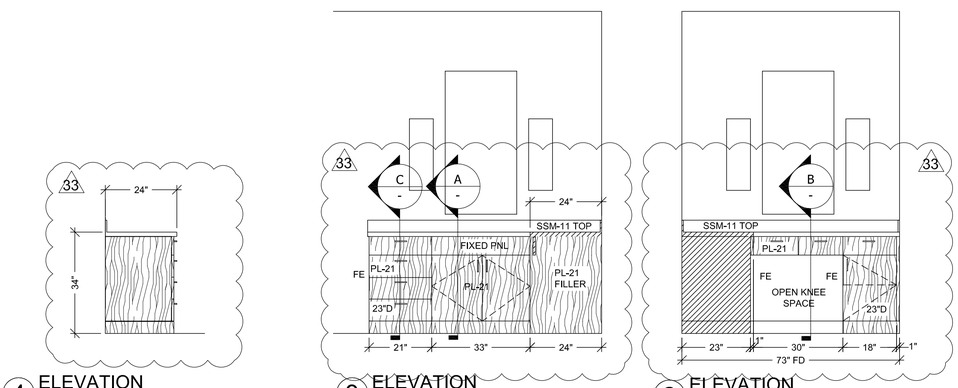

4 ELEVATION
SCALE: 1/2"=12" ROOM: 2.113.08
REF:A3/A9.2D ITEM:2-146

3 ELEVATION
SCALE: 1/2"=12" ROOM: 2.113.08
REF:A3/A9.2D ITEM:2-146

2 ELEVATION
SCALE: 1/2"=12" ROOM: 2.113.08
REF:A2/A9.2D ITEM:2-146

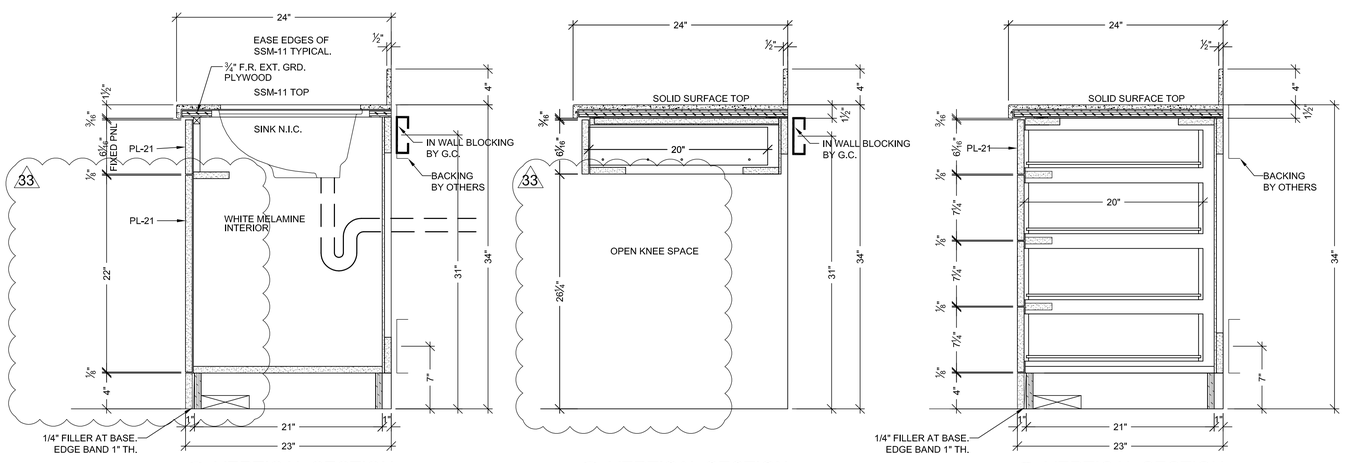

A VERTICAL SECTION
SCALE: 1 1/2" = 1'- 0"
ARCH. REF: A9.0

B VERTICAL SECTION
SCALE: 1 1/2" = 1'- 0"
ARCH. REF: A9.0

C VERTICAL SECTION
SCALE: 1 1/2" = 1'- 0"
ARCH. REF: A9.0

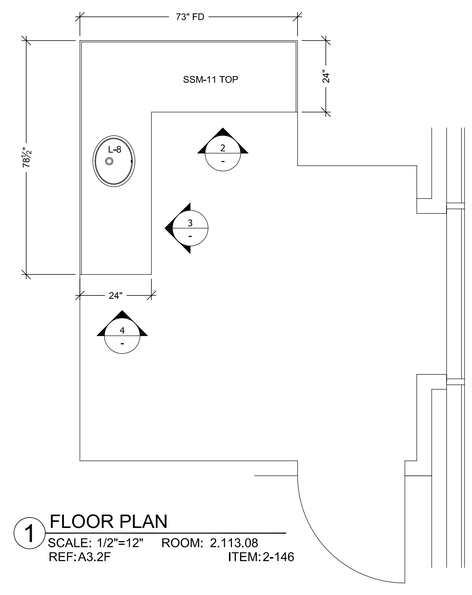

1 FLOOR PLAN
SCALE: 1/2"=12" ROOM: 2.113.08
REF:A3.2F ITEM:2-146

DWG. #	REVISION	BY
–	PER R.L.C. DATED 12-19-11	JB
–	PER R.F.I. DATED 2-10-12	MW
–		
–		
–		
–		
–	FIELD DIMENSIONS	MW

DATE	NO	REVISION
2-13-12	31	PER R.L.C. DATED 12-19-11
2-13-12	32	PER R.F.I. DATED 2-10-12
–	33	
–	34	
–	35	
–	36	
2-29-12		FIELD DIMENSIONS

PROJECT :
CHOC HOSPITAL
TOWER II
455 S. MAIN STREET
ORANGE, CA. 92868

FLOOR : SECOND LEVEL
ROOM # : 2.113.08
ITEM : LAV. TOP & CABINETS
REF : A2.A3/A9.2D, A3.2F
ITEM # : 2-146

CONTRACTOR : McCARTHY

ARCHITECT : FKP ARCHITECTS

COPYRIGHT
ALL IDEAS DESIGNS, ARRANGEMENTS AND PLANS INDICATED OR REPRESENTED BY THIS DRAWING ARE OWNED BY, AND THE PROPERTY OF P.A.M. AND WERE CREATED,EVOLVED AND DEVELOPED FOR USE ON, AND SPECIFIC TO THIS PROJECT AND PREMISES. NONE OF SUCH IDEAS, DESIGNS, ARRANGEMENT OF PLANS SHALL BE USED BY OR DISCLOSED TO ANY PERSON, FIRM OR CORPORATION FOR ANY PURPOSE WHATSOEVER WITHOUT THE WRITTEN PERMISSION OF P.A.M.

FIELD VERIFICATION
P.A.M. SHOP DRAWINGS ARE MADE FOR THE EXCLUSIVE USE OF P.A.M. AND ANY OTHER TRADES USING THESE DRAWING USE THEM AT THERE OWN RISK. DIMENSIONS MUST BE FIELD VERIFIED AND ARE NOT GUARANTEED. FIELD CONDITIONS MAY REQUIRE CHANGES IN DIMENSIONS, SO OTHER TRADES USING THESE DRAWINGS MUST TAKE THEIR OWN FIELD DIMENSIONS.

PACIFIC ARCHITECTURAL MILLWORK
104 LESLIE ST. LA HABRA, CA. 90631
PH: (714) 526-2639 FAX: (714) 526-2673

DATE: 10-28-11
DRAWN BY: JB
SCALE: NOTED
JOB: 3635
SUBMITTAL: 28
DWG: 2.46
SHEET(S):

RELEASE FOR PRODUCTION
SIGNATURE: _____
DATE: _____
NOTE: NO CHANGES CAN BE MADE AFTER AUTHORIZATION TO PROCEED.

HARDWARE SCHEDULE

	ITEM	PART NO.	MANUF.	FINISH / COLOR
1	METAL WIRE PULL 4" CTC	MC402-4-A	EPCO	SATIN CLR. ANODIZED
2	METAL SHELF SUPPORT	282.04.711	HAFELE	NICKLE PLATED
3	BLUM HINGE PLATE	B173L810	BLUM	NICKLE PLATED
4	BLUM HINGE (INSERTA)	73T5590 F.O., S.C. , 120	BLUM	NICKLE PLATED
5	DRAWER SLIDES	AC7432-20 (100LBS)	ACCURIDE	ZINC
6				
7				
8				
9				
10				
11				

FINISH SCHEDULE

SSM 12 - SOLID SURFACE TOPS
AVONITE WHITE SANDS K1-6636 GLOSS

PL 21 - PLASTIC LAMINATE - (CABINETS)
WILSONART 7936K-07 WILLIAMSBURG CHERRY TEXTURED GLOSS

31

WHITE MELAMINE INTERIORS U.N.O.

WALL SCRIBES TO BE FLUSH WITH CABINET DOORS & DRAWERS.

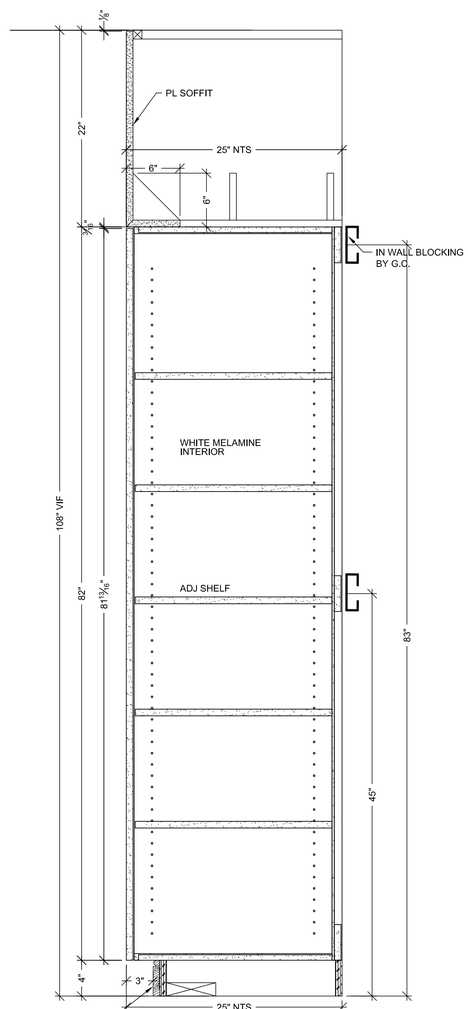

A VERTICAL SECTION
SCALE: 1 1/2" = 1'- 0"
ARCH. REF: A9.0

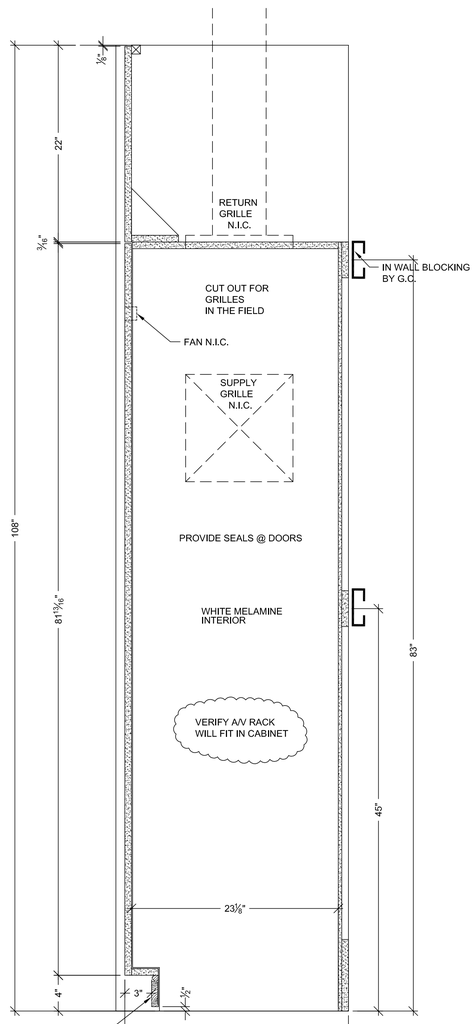

C VERTICAL SECTION
SCALE: 1 1/2" = 1'- 0"
ARCH. REF: A9.0

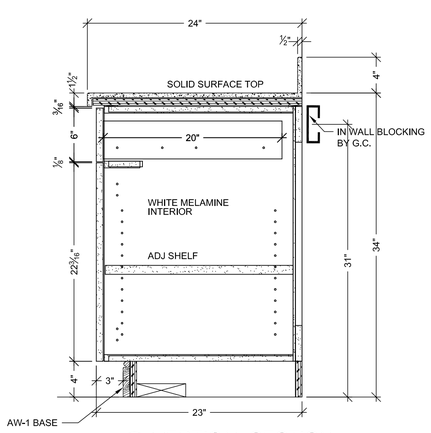

A VERTICAL SECTION
SCALE: 1 1/2" = 1'- 0"
ARCH. REF: A9.0

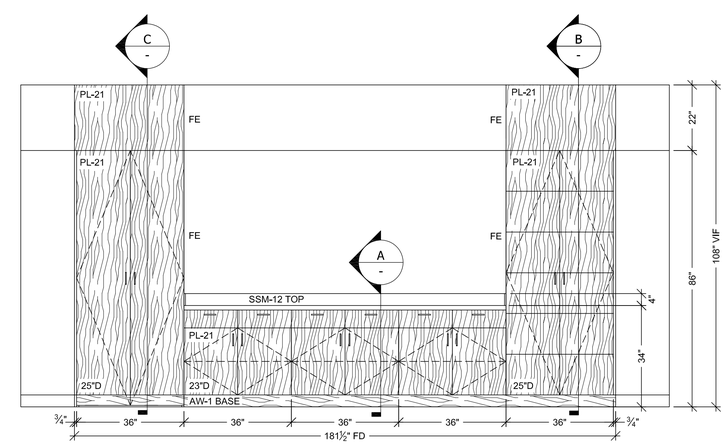

2 ELEVATION
SCALE: 1/2"=12" ROOM: 2.113.17
REF:D3/A9.2C ITEM:2-147

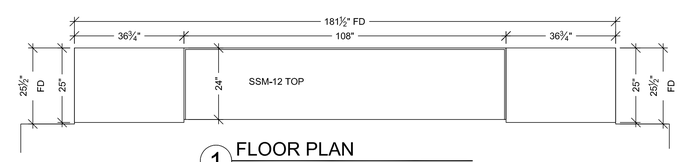

1 FLOOR PLAN
SCALE: 1/2"=12" ROOM: 2.113.17
REF:A3.2F ITEM:2-147

RELEASE FOR PRODUCTION
SIGNATURE:
DATE:
NOTE: NO CHANGES CAN BE MADE AFTER AUTHORIZATION TO PROCEED.

DATE	NO	REVISION	DSB. #	BY
2-13-12	1	PER R.L.C. DATED 12-19-11	-	JB
-	2		-	
-	3		-	
-	4		-	
-	5		-	
-	6		-	
2-29-12	7	FIELD DIMENSIONS	-	MW

PROJECT :
CHOC HOSPITAL
TOWER II
455 S. MAIN STREET
ORANGE, CA. 92868

FLOOR : SECOND LEVEL
ROOM # : 2.113.17
ITEM : TOP & CABINETS
REF : D3/A9.2C, A3.2F
ITEM #: 2-147

CONTRACTOR :
McCARTHY

ARCHITECT :
FKP ARCHITECTS

COPYRIGHT
ALL IDEAS DESIGNS, ARRANGEMENTS AND PLANS INDICATED OR REPRESENTED BY THIS DRAWING ARE OWNED BY, AND THE PROPERTY OF PA.M. AND WERE CREATED,EVOLVED AND DEVELOPED FOR USE ON, AND IN CONNECTION WITH THE SPECIFIED PROJECT, NO OTHER USE OR USE ON OTHER PROJECTS OF THESE PLANS SHALL BE USED BY OR DISCLOSED TO ANY PERSON, FIRM OR CORPORATION FOR ANY PURPOSE WHATSOEVER WITHOUT THE WRITTEN PERMISSION OF P.A.M.

FIELD VERIFICATION

P.A.M. SHOP DRAWINGS ARE MADE FOR THE EXCLUSIVE USE OF P.A.M. AND ANY OTHER TRADES USING THESE DRAWING USE THEM AT THEIR OWN RISK. DIMENSIONS ON THESE DRAWINGS MAY NOT BE ALWAYS NOTED, FIELD CONDITIONS MAY REQUIRE CHANGES IN DIMENSIONS, SO OTHER TRADES USING THESE DRAWINGS MUST TAKE THEIR OWN FIELD DIMENSIONS.

PACIFIC
ARCHITECTURAL MILLWORK
1041 LESLIE ST. LA HABRA, CA. 90631
PH: (714) 525-2093 FAX: (714) 525-2073

DATE: 10-28-11	
DRAWN BY: JB	SCALE: NOTED
JOB: 3635	SUBMITTAL: 28
DWG: 2.47	SHEET(S):

HARDWARE SCHEDULE

	ITEM	PART NO.	MANUF.	FINISH / COLOR
1	METAL WIRE PULL 4" CTC	MC402-4-A	EPCO	SATIN CLR. ANODIZED
2	METAL SHELF SUPPORT	282.04.711	HAFELE	NICKLE PLATED
3	BLUM HINGE PLATE	B173L810	BLUM	NICKLE PLATED
4	BLUM HINGE (INSERTA)	73T5590 F.O., S.C. , 120	BLUM	NICKLE PLATED
5	DRAWER SLIDES	AC7432-20 (100LBS)	ACCURIDE	ZINC
6				
7				
8				
9				
10				
11				

FINISH SCHEDULE

AW 1 - SOLID & WOOD VENEER
P.S. CHERRY (BOOKMATCHED) TO MATCH ARCH. SAMPLE

SSM 12 - SOLID SURFACE TOPS
AVONITE WHITE SANDS K1-6636 GLOSS

WHITE MELAMINE INTERIORS U.N.O. 31

WALL SCRIBES TO BE FLUSH WITH CABINET DOORS & DRAWERS.

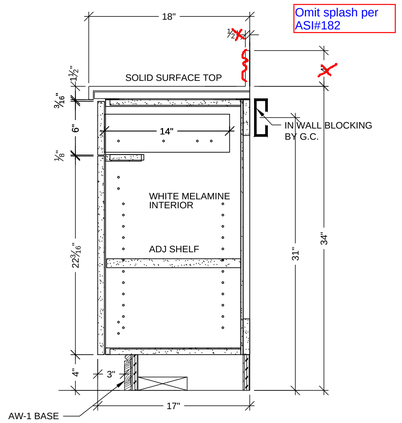

B VERTICAL SECTION
SCALE: 1 1/2" = 1'- 0"
ARCH. REF: A9.0

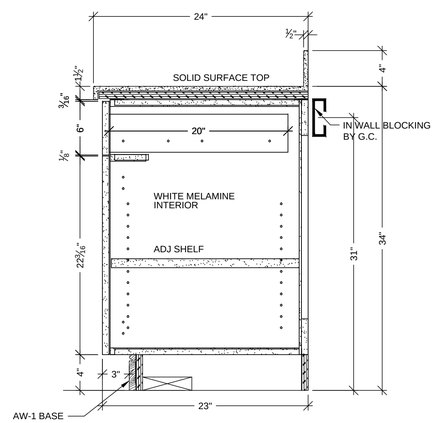

A VERTICAL SECTION
SCALE: 1 1/2" = 1'- 0"
ARCH. REF: A9.0

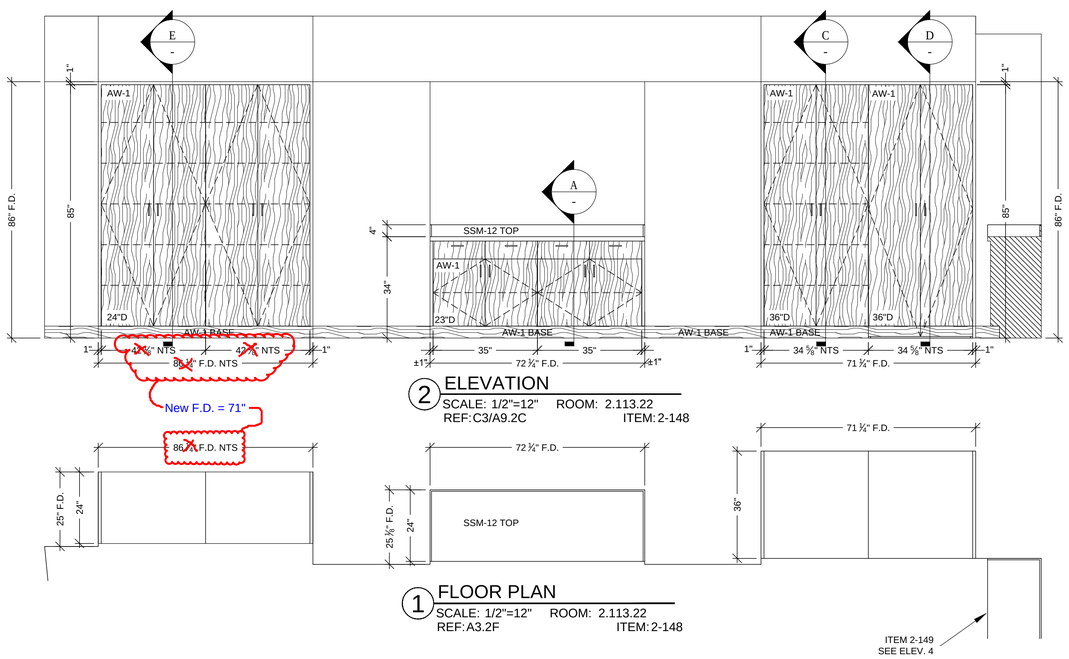

2 ELEVATION
SCALE: 1/2"=12" ROOM: 2.113.22
REF: C3/A9.2C ITEM: 2-148

1 FLOOR PLAN
SCALE: 1/2"=12" ROOM: 2.113.22
REF: A3.2F ITEM: 2-148

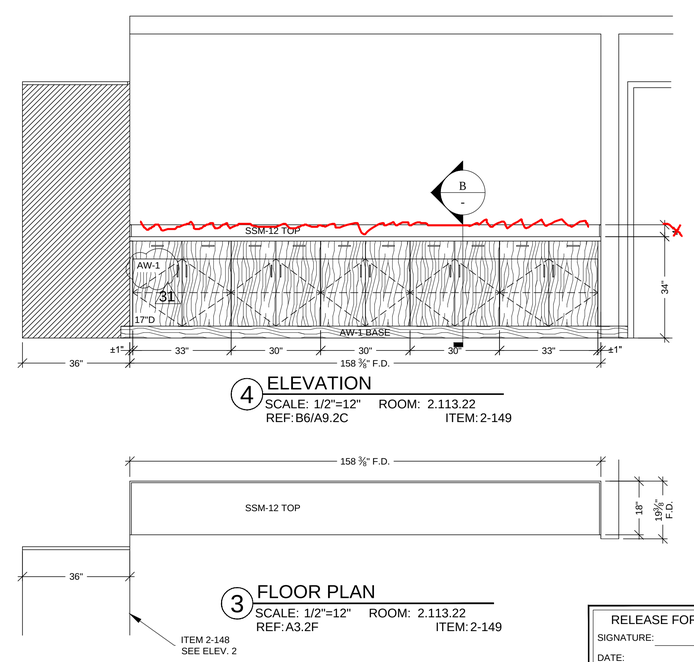

4 ELEVATION
SCALE: 1/2"=12" ROOM: 2.113.22
REF: B6/A9.2C ITEM: 2-149

3 FLOOR PLAN
SCALE: 1/2"=12" ROOM: 2.113.22
REF: A3.2F ITEM: 2-149

RELEASE FOR PRODUCTION
SIGNATURE:
DATE:
NOTE: NO CHANGES CAN BE MADE AFTER AUTHORIZATION TO PROCEED.

DATE	NO	REVISION	SUB #	BY
2-13-12	2	PER R.L.C. DATED 12-19-11		JB
3-8-12	3	FIELD DIMENSIONS		JB
	4			
	5			
	6			

PROJECT : CHOC HOSPITAL TOWER II
455 S. MAIN STREET
ORANGE, CA. 92868

FLOOR : SECOND LEVEL
ROOM # : 2.113.22
ITEM : TOPS & CABINETS
REF : B6,C3/A9.2C, A3.2F
ITEM #: 2-148,49

ARCHITECT : FKP ARCHITECTS
CONTRACTOR : McCARTHY

COPYRIGHT
ALL IDEAS DESIGNS, ARRANGEMENTS AND PLANS INDICATED OR REPRESENTED BY THIS DRAWING ARE OWNED BY, AND THE PROPERTY OF P.A.M. AND WERE CREATED,EVOLVED AND DEVELOPED FOR USE ON, AND IN CONNECTION WITH THE SPECIFIED PROJECT. NONE OF SUCH IDEAS, DESIGNS, ARRANGEMENTS OR PLANS SHALL BE USED BY OR DISCLOSED TO ANY PERSON, FIRM OR CORPORATION FOR ANY PURPOSE WHATSOEVER WITHOUT THE WRITTEN PERMISSION OF P.A.M.

FIELD VERIFICATION
P.A.M. SHOP DRAWINGS ARE MADE FOR THE EXCLUSIVE USE OF P.A.M. AND ANY OTHER TRADES USING THESE DRAWING USE THEM AT THERE OWN RISK. DIMENSIONS ON THESE DRAWINGS MAY NOT BE ALWAYS NOTED, THEREFORE THE CONTRACTOR MUST VERIFY DIMENSIONS, SO OTHER TRADES USING THESE DRAWINGS MUST TAKE THEIR OWN FIELD DIMENSIONS.

PACIFIC ARCHITECTURAL MILLWORK
1041 LESLIE ST. LA HABRA, CA. 90631
PH: (714) 525-2059 FAX: (714) 525-2673

DATE: 10-28-11
DRAWN BY: JB SCALE: NOTED
JOB: 3635 SUBMITTAL: 28
DWG: 2.48
SHEET(S):

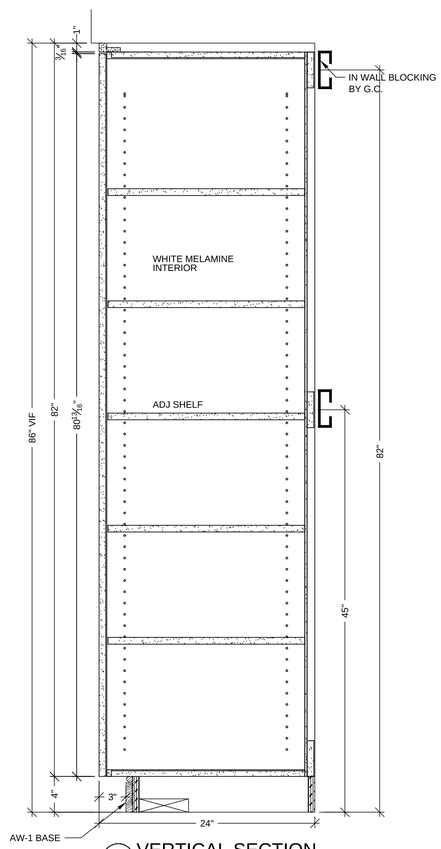

E VERTICAL SECTION
SCALE: 1 1/2" = 1'- 0"
ARCH. REF: A9.0

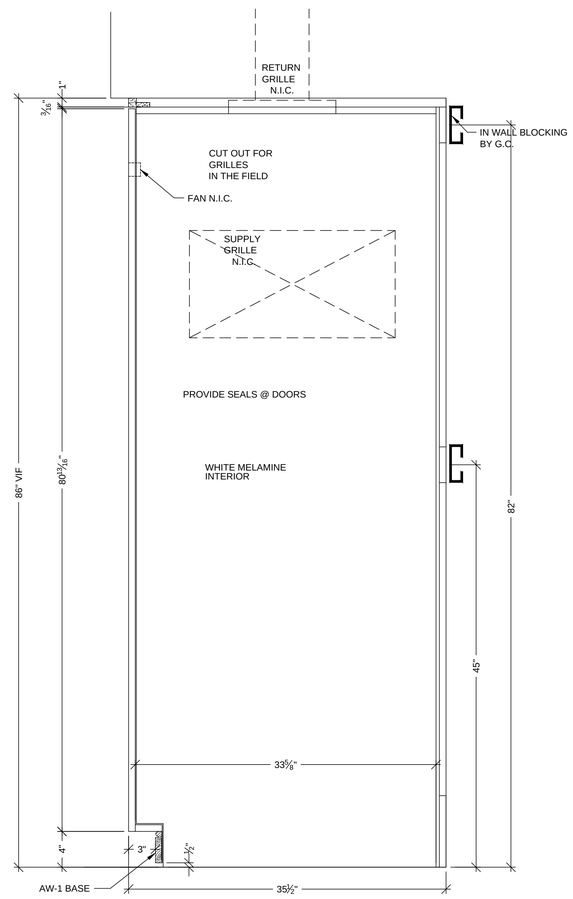

D VERTICAL SECTION
SCALE: 1 1/2" = 1'- 0"
ARCH. REF: A9.0

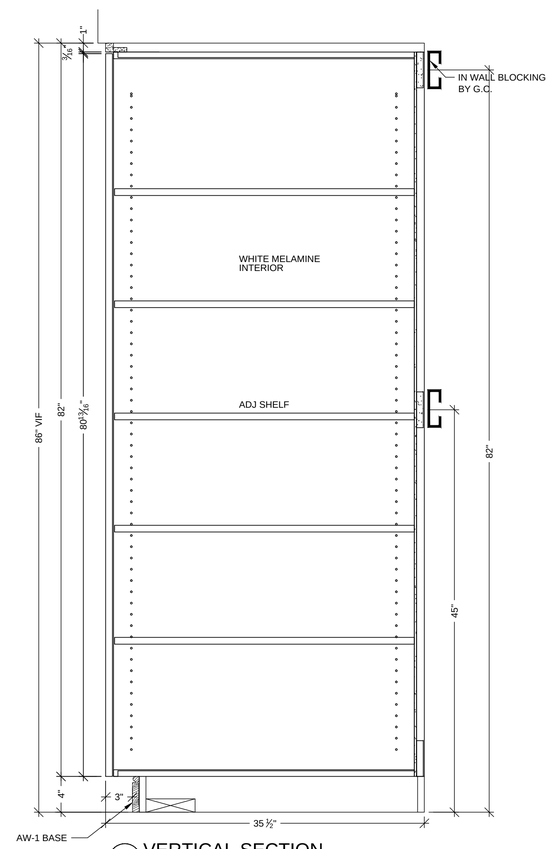

C VERTICAL SECTION
SCALE: 1 1/2" = 1'- 0"
ARCH. REF: A9.0

RELEASE FOR PRODUCTION
SIGNATURE: _____
DATE: _____
NOTE: NO CHANGES CAN BE MADE AFTER AUTHORIZATION TO PROCEED.

DATE	NO	REVISION	SUB #	BY
2-13-12	2	PER R.L.C. DATED 12-19-11	—	JB
3-8-12	3	FIELD DIMENSIONS	—	JB
—	4		—	
—	5		—	
—	6		—	
—			—	

PROJECT :
CHOC HOSPITAL
TOWER II
455 S. MAIN STREET
ORANGE, CA. 92868

FLOOR : SECOND LEVEL
ROOM # : 2.113.22
ITEM : TOPS & CABINETS
REF : B6.C3/A9.2C, A3.2F
ITEM # : 2-148.49

ARCHITECT :
FKP ARCHITECTS

CONTRACTOR :
McCARTHY

COPYRIGHT
ALL IDEAS DESIGNS, ARRANGEMENTS AND PLANS INDICATED OR REPRESENTED BY THIS DRAWING ARE OWNED BY, AND THE PROPERTY OF P.A.M. AND WERE CREATED,EVOLVED AND DEVELOPED FOR USE ON, AND FOR THIS PROJECT AND NO OTHER PROJECT. NONE OF SUCH IDEAS, DESIGNS, ARRANGEMENT OF PLANS SHALL BE USED BY OR DISCLOSED TO ANY PERSON, FIRM OR CORPORATION FOR ANY PURPOSE WHATSOEVER WITHOUT THE WRITTEN PERMISSION OF P.A.M.

FIELD VERIFICATION
P.A.M. SHOP DRAWINGS ARE MADE FOR THE EXCLUSIVE USE OF P.A.M. AND ANY OTHER TRADES USING THESE DRAWING USE THEM AT THERE OWN RISK. DIMENSIONS SHOWN ON THESE DRAWINGS ARE ASSUMED. FIELD CONDITIONS MAY REQUIRE CHANGES IN DIMENSIONS, SO OTHER TRADES USING THESE DRAWINGS MUST TAKE THEIR OWN FIELD DIMENSIONS.

PACIFIC
ARCHITECTURAL MILLWORK
104 LESLIE ST. LA HABRA, CA. 90631
PH: (714) 525-2059 FAX: (714) 525-2673

DATE: 10-28-11
DRAWN BY: JB
SCALE: NOTED
JOB: 3635
SUBMITTAL: 28
DWG: 2.48.1
SHEET(S):

HARDWARE SCHEDULE

	ITEM	PART NO.	MANUF.	FINISH / COLOR
1	METAL WIRE PULL 4" CTC	MC402-4-A	EPCO	SATIN CLR. ANODIZED
2	METAL SHELF SUPPORT	282.04.711	HAFELE	NICKLE PLATED
3	BLUM HINGE PLATE	B173L810	BLUM	NICKLE PLATED
4	BLUM HINGE (INSERTA)	73T5590 F.O., S.C. , 120	BLUM	NICKLE PLATED
5	DRAWER SLIDES	AC7432-20 (100LBS)	ACCURIDE	ZINC
6				
7				
8				
9				
10				
11				

FINISH SCHEDULE

SSM 12 - SOLID SURFACE TOPS
AVONITE WHITE SANDS K1-6636 GLOSS

PL 21 - PLASTIC LAMINATE - (CABINETS)
WILSONART 7936K-07 WILLIAMSBURG CHERRY TEXTURED GLOSS

WHITE MELAMINE INTERIORS U.N.O. 31

WALL SCRIBES TO BE FLUSH WITH CABINET DOORS & DRAWERS.

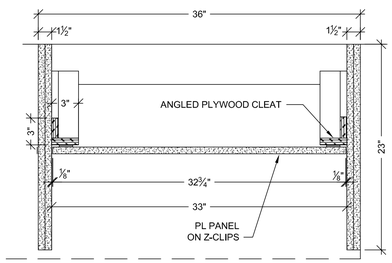

E PLAN SECTION
SCALE: 1 1/2" = 1'- 0"

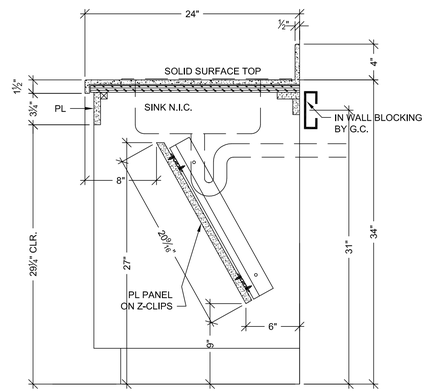

A VERTICAL SECTION
SCALE: 1 1/2" = 1'- 0"
ARCH. REF: A9.0

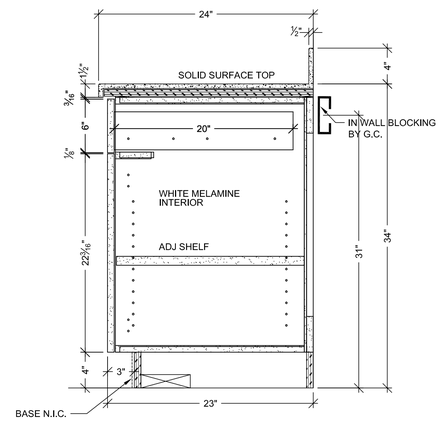

B VERTICAL SECTION
SCALE: 1 1/2" = 1'- 0"
ARCH. REF: A9.0

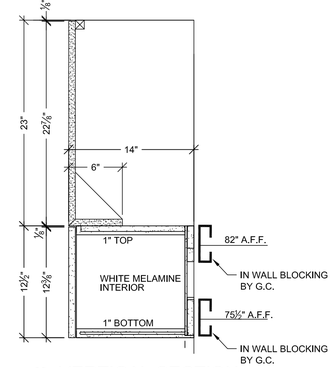

D VERTICAL SECTION
SCALE: 1 1/2" = 1'- 0"
ARCH. REF: A9.0

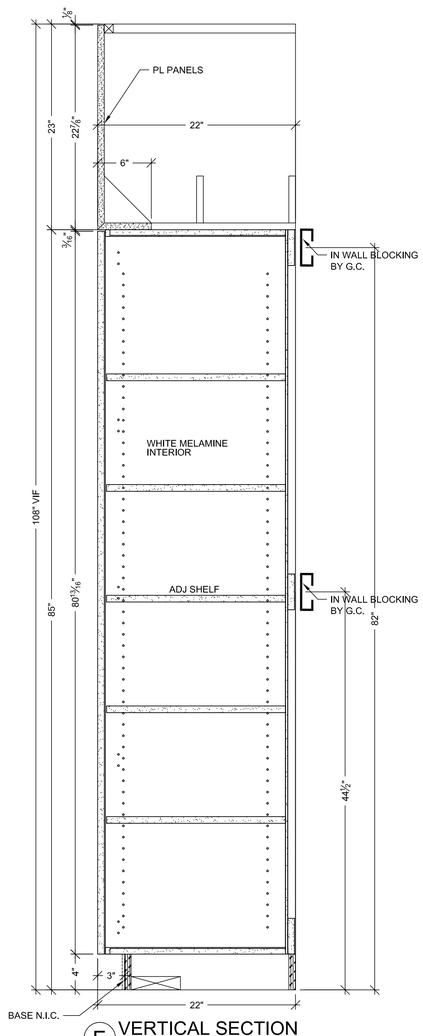

F VERTICAL SECTION
SCALE: 1 1/2" = 1'- 0"
ARCH. REF: A9.0

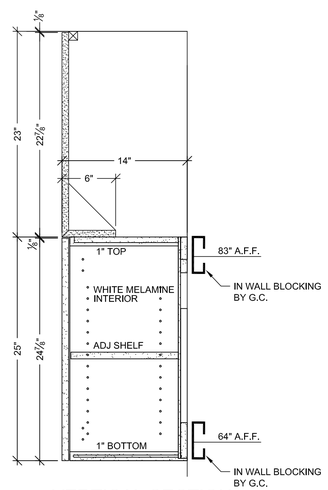

C VERTICAL SECTION
SCALE: 1 1/2" = 1'- 0"
ARCH. REF: A9.0

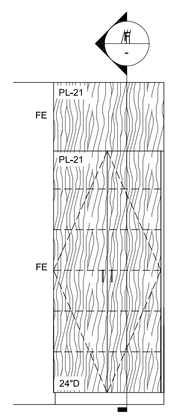

5 ELEVATION
SCALE: 1/2"=12" ROOM: 2.113.09
REF:A9.0 ITEM:2-151

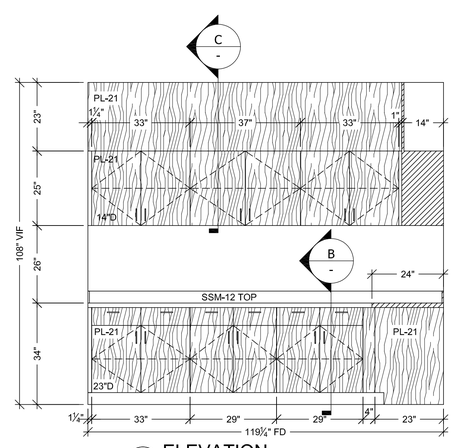

4 ELEVATION
SCALE: 1/2"=12" ROOM: 2.113.26
REF:A5/A9.2C ITEM:2-150

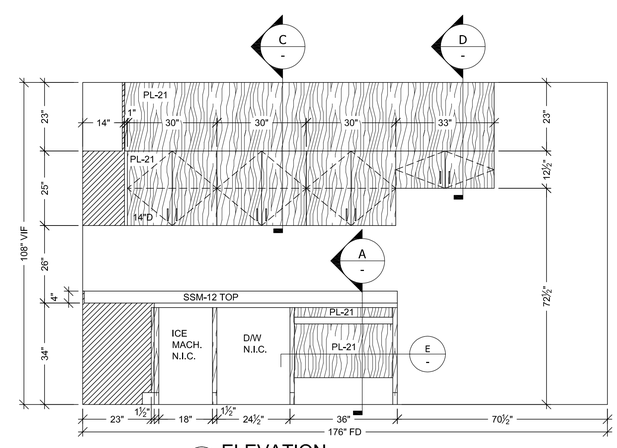

2 ELEVATION
SCALE: 1/2"=12" ROOM: 2.113.26
REF:A6/A9.2C ITEM:2-150

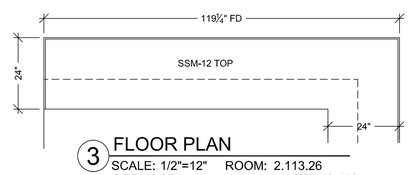

3 FLOOR PLAN
SCALE: 1/2"=12" ROOM: 2.113.26
REF:A3.2F ITEM:2-150

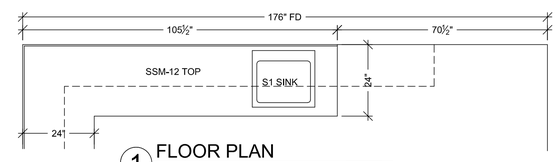

1 FLOOR PLAN
SCALE: 1/2"=12" ROOM: 2.113.26
REF:A3.2F ITEM:2-150

RELEASE FOR PRODUCTION

SIGNATURE: _____

DATE: _____

NOTE: NO CHANGES CAN BE MADE AFTER AUTHORIZATION TO PROCEED.

DATE	NO	REVISION	SUB. #	BY
2-13-12	1	PER R.L.C. DATED 12-19-11	-	JB
-	2		-	
-	3		-	
-	4		-	
-	5		-	
-	6		-	
2-29-12	7	FIELD DIMENSIONS	-	MW

PROJECT :
CHOC HOSPITAL
TOWER II
455 S. MAIN STREET
ORANGE, CA. 92868

FLOOR : SECOND LEVEL
ROOM # : 2.113,26,2.113.09
ITEM : TOPS & CABINETS
REF : A5,A6/A9.2C, A3.2F

ITEM # : 2-150,51

CONTRACTOR :
McCARTHY

ARCHITECT :
FKP ARCHITECTS

COPYRIGHT
ALL IDEAS DESIGNS, ARRANGEMENTS AND PLANS INDICATED OR REPRESENTED BY THIS DRAWING ARE OWNED BY, AND THE PROPERTY OF P.A.M. AND WERE CREATED,EVOLVED AND DEVELOPED FOR USE ON, AND IN CONNECTION WITH THE SPECIFIED PROJECT. NONE OF SUCH IDEAS, DESIGNS, ARRANGEMENT OF PLANS OR OTHER WORK SHALL BE DISCLOSED TO ANY PERSON, FIRM OR CORPORATION FOR ANY PURPOSE WHATSOEVER WITHOUT THE WRITTEN PERMISSION OF P.A.M.

FIELD VERIFICATION
P.A.M. SHOP DRAWINGS ARE MADE FOR THE EXCLUSIVE USE OF P.A.M. AND ANY OTHER TRADES USING THESE DRAWING USE THEM AT THERE OWN RISK. DIMENSIONS ON THESE DRAWINGS MAY NOT BE ALWAYS NOTED. FIELD CONDITIONS MAY REQUIRE CHANGES IN DIMENSIONS. SO OTHER TRADES USING THESE DRAWINGS MUST TAKE THEIR OWN FIELD DIMENSIONS.

PACIFIC ARCHITECTURAL MILLWORK
1041 TESTE ST. LA HABRA, CA. 90631
PH: (714) 526-2869 FAX: (714) 526-2873

DATE: 10-28-11
DRAWN BY: JB SCALE: NOTED
JOB: 3635 SUBMITTAL: 28
DWG: 2.49
SHEET(S):

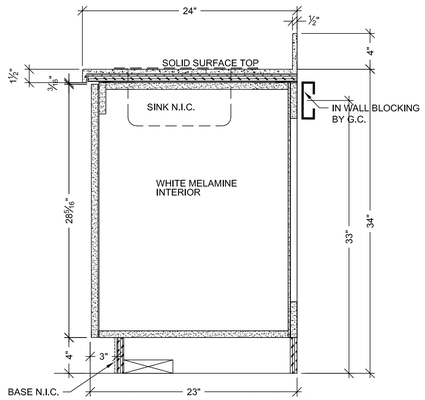

A VERTICAL SECTION
SCALE: 1 1/2" = 1'- 0"
ARCH. REF: A9.0

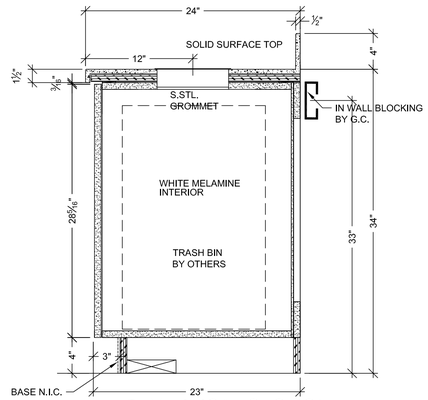

B VERTICAL SECTION
SCALE: 1 1/2" = 1'- 0"
ARCH. REF: A9.0

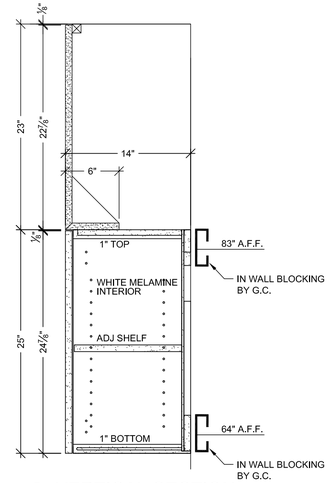

C VERTICAL SECTION
SCALE: 1 1/2" = 1'- 0"
ARCH. REF: A9.0

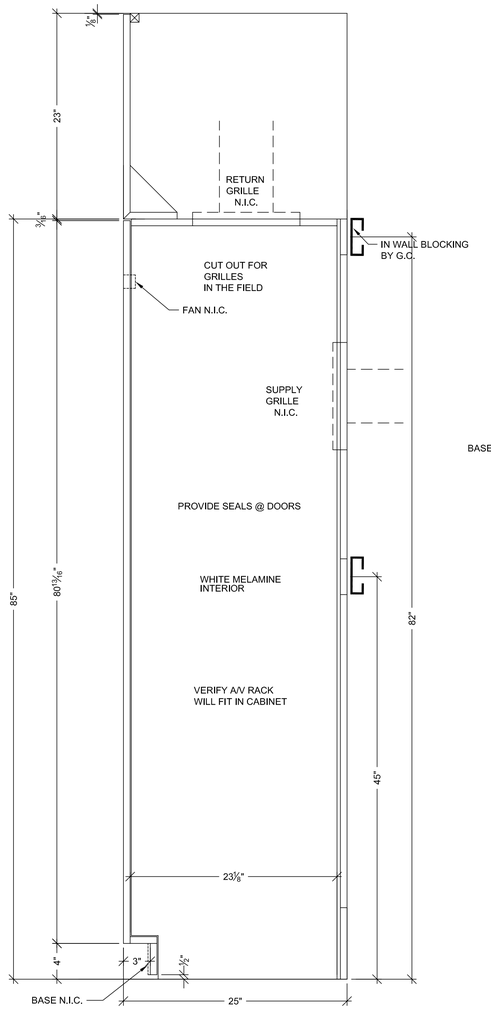

D VERTICAL SECTION
SCALE: 1 1/2" = 1'- 0"
ARCH. REF: A9.0

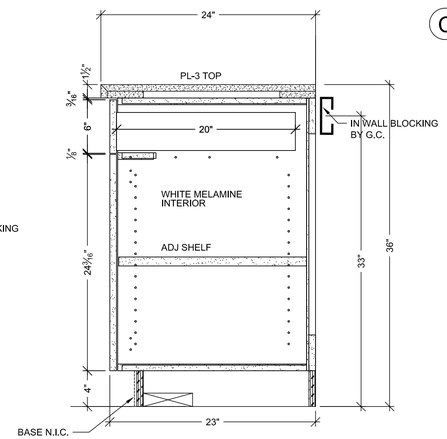

E VERTICAL SECTION
SCALE: 1 1/2" = 1'- 0"
ARCH. REF: A9.0

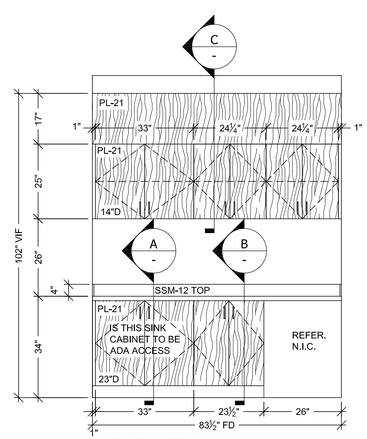

4 ELEVATION
SCALE: 1/2"=12" ROOM: 2.113.16
REF: A2/A9.2C ITEM: 2-153

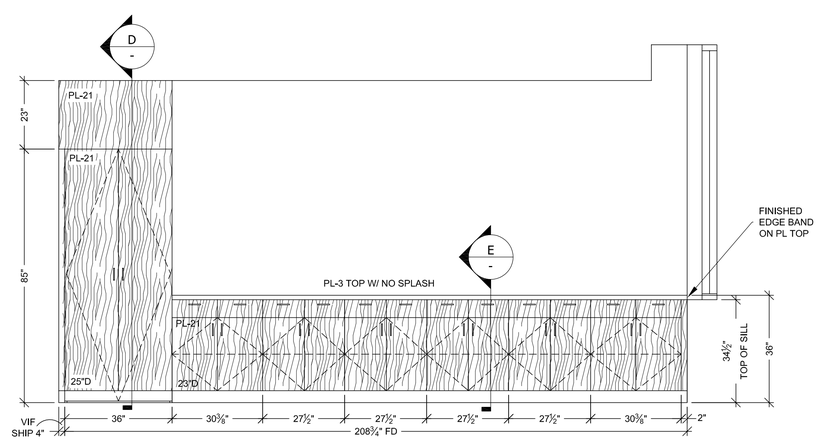

2 ELEVATION
SCALE: 1/2"=12" ROOM: 2.113.15
REF: A9.0 ITEM: 2-152

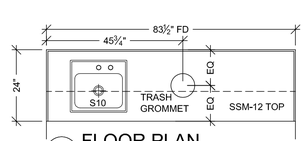

3 FLOOR PLAN
SCALE: 1/2"=12" ROOM: 2.113.16
REF: A3.2E ITEM: 2-153

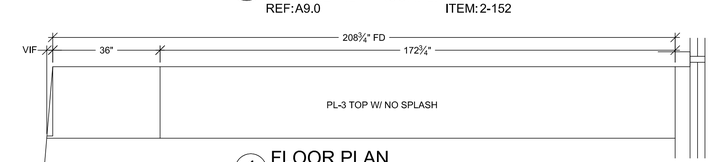

1 FLOOR PLAN
SCALE: 1/2"=12" ROOM: 2.113.15
REF: A3.2E ITEM: 2-152

HARDWARE SCHEDULE

	ITEM	PART NO.	MANUF.	FINISH / COLOR
1	METAL WIRE PULL 4" CTC	MC402-4-A	EPCO	SATIN CLR. ANODIZED
2	METAL SHELF SUPPORT	282.04.711	HAFELE	NICKLE PLATED
3	BLUM HINGE PLATE	B173L810	BLUM	NICKLE PLATED
4	BLUM HINGE (INSERTA)	73T5590 F.O., S.C. , 120	BLUM	NICKLE PLATED
5	DRAWER SLIDES	AC7432-20 (100LBS)	ACCURIDE	ZINC
6	TRASH GROMMET	TM2B-SSS	MOCKETT	SATIN STAINLESS STL.
7				
8				
9				
10				
11				

FINISH SCHEDULE

SSM 12	- SOLID SURFACE TOPS AVONITE WHITE SANDS K1-6636 GLOSS
PL 21	- PLASTIC LAMINATE - (CABINETS) WILSONART 7936K-07 WILLIAMSBURG CHERRY TEXTURED GLOSS
PL 3	- PLASTIC LAMINATE - (TOP) FORMICA 300-58 SAIL WHITE OXIDE MATTE

WHITE MELAMINE INTERIORS U.N.O. 31

WALL SCRIBES TO BE FLUSH WITH CABINET DOORS & DRAWERS.

DATE	NO	REVISION	SUB. #	BY
2-13-12	31	PER R.L.C. DATED 12-19-11	–	JB
–	2	–	–	
–	3	–	–	
–	4	–	–	
–	5	–	–	
–	6	–	–	
2-29-12	7	FIELD DIMENSIONS	–	MW

PROJECT :
CHOC HOSPITAL
TOWER II
455 S. MAIN STREET
ORANGE, CA. 92868

P.

ITEM # : 2-152,53

CONTRACTOR :
McCARTHY

FLOOR : SECOND LEVEL
ROOM # : 2.113.15,2.113.16
ITEM : TOPS & CABINETS
REF : A2/A9.2C, A3.2E

ARCHITECT :
FKP ARCHITECTS

COPYRIGHT
ALL IDEAS DESIGNS, ARRANGEMENTS AND PLANS INDICATED OR REPRESENTED BY THIS DRAWING ARE OWNED BY, AND THE PROPERTY OF PJ.AI., AND WERE CREATED,EVOLVED AND DEVELOPED FOR USE ON, AND IN CONNECTION WITH THE SPECIFIED PROJECT, NONE OF SUCH IDEAS, DESIGNS, ARRANGEMENT OF PLANS SHALL BE USED BY OR DISCLOSED TO ANY PERSON, FIRM OR CORPORATION FOR ANY PURPOSES WHATSOEVER WITHOUT THE WRITTEN PERMISSION OF P.A.M..

FIELD VERIFICATION
P.A.M. SHOP DRAWINGS ARE MADE FOR THE EXCLUSIVE USE OF P.A.M. AND ANY OTHER TRADES USING THESE DRAWING USE THEM AT THEIR OWN RISK. DIMENSIONS ON THESE DRAWINGS MAY NOT BE ALWAYS NOTED, FIELD CONDITIONS MAY REQUIRE CHANGES IN DIMENSIONS, SO OTHER TRADES USING THESE DRAWINGS MUST TAKE THEIR OWN FIELD DIMENSIONS.

PACIFIC ARCHITECTURAL MILLWORK
1041 LESLIE ST. LA HABRA, CA. 90631
PH: (714) 525-2093 FAX: (714) 525-2073

DATE: 10-28-11
DRAWN BY: JB
SCALE: NOTED
JOB: 3635
SUBMITTAL: 28
DWG: 2.50
SHEET(S):

RELEASE FOR PRODUCTION
SIGNATURE:
DATE:
NOTE: NO CHANGES CAN BE MADE AFTER AUTHORIZATION TO PROCEED.

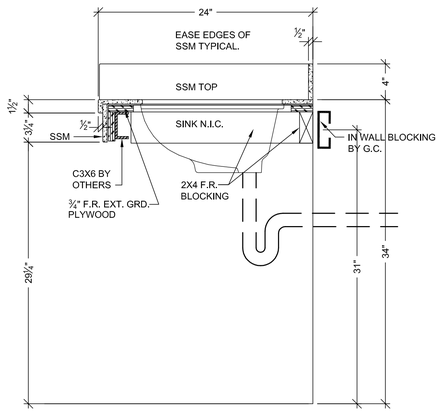

A VERTICAL SECTION
SCALE: 1 1/2" = 1'- 0"
ARCH. REF: A2/A11.7

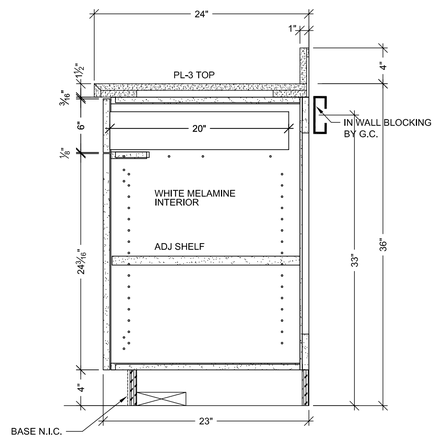

B VERTICAL SECTION
SCALE: 1 1/2" = 1'- 0"
ARCH. REF: A9.0

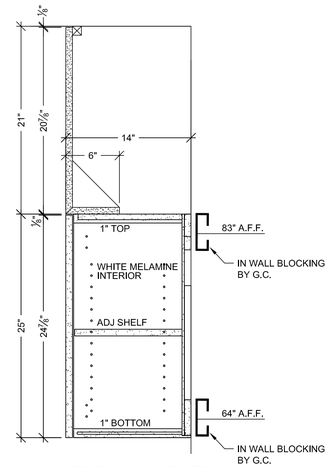

C VERTICAL SECTION
SCALE: 1 1/2" = 1'- 0"
ARCH. REF: A9.0

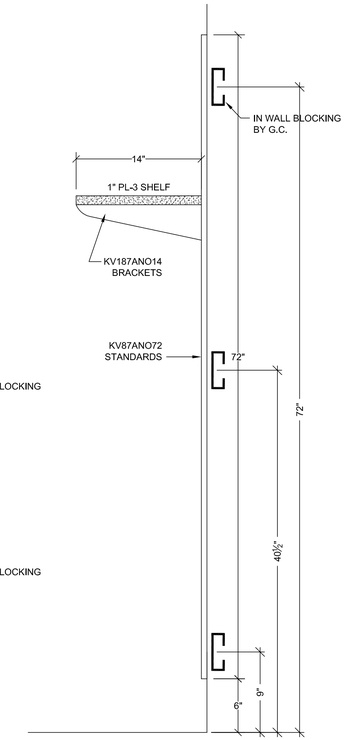

D VERTICAL SECTION
SCALE: 1 1/2" = 1'- 0"
ARCH. REF: B6/A11.8

HARDWARE SCHEDULE

	ITEM	PART NO.	MANUF.	FINISH / COLOR
1	METAL WIRE PULL 4" CTC	MC402-4-A	EPCO	SATIN CLR. ANODIZED
2	METAL SHELF SUPPORT	282.04.711	HAFELE	NICKLE PLATED
3	BLUM HINGE PLATE	B173L810	BLUM	NICKLE PLATED
4	BLUM HINGE (INSERTA)	73T5590 F.O., S.C. , 120	BLUM	NICKLE PLATED
5	DRAWER SLIDES	AC7432-20 (100LBS)	ACCURIDE	ZINC
6	SHELF BRACKETS	KV187ANO 14	KV	ANOCHROME
7	SHELF STANDARDS	KV87ANO 72	KV	ANOCHROME
8				
9				
10				
11				

FINISH SCHEDULE

SSM 10	- SOLID SURFACE TOPS AVONITE MALT F1-7810 SATIN
PL 21	- PLASTIC LAMINATE - (CABINETS) WILSONART 7936K-07 WILLIAMSBURG CHERRY TEXTURED GLOSS
PL 3	- PLASTIC LAMINATE - (TOP) FORMICA 300-58 SAIL WHITE OXIDE MATTE

WHITE MELAMINE INTERIORS U.N.O. 31

WALL SCRIBES TO BE FLUSH WITH CABINET DOORS & DRAWERS.

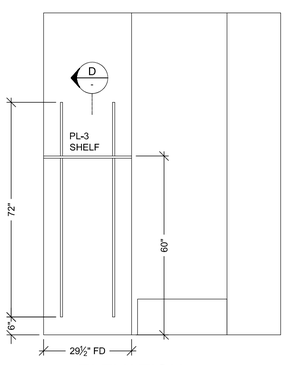

11 ELEVATION
SCALE: 1/2" = 1'- 0" ITEM: 2-159
ROOM: 2.113.19
ARCH. REF: B6/A11.8

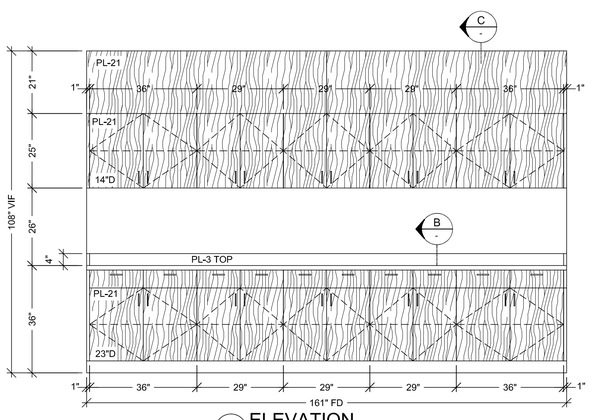

10 ELEVATION
SCALE: 1/2" = 1'- 0" ITEM: 2-158
ROOM: 2.113.38
ARCH. REF: A9.0

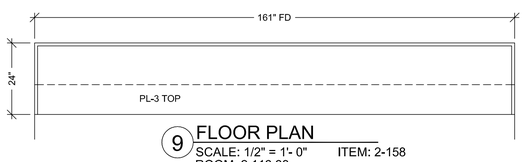

9 FLOOR PLAN
SCALE: 1/2" = 1'- 0" ITEM: 2-158
ROOM: 2.113.38
ARCH. REF: A3.2G

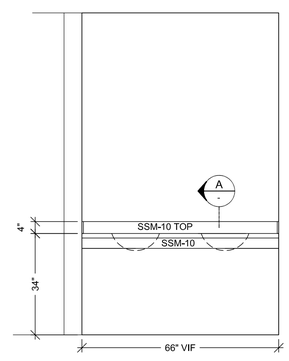

8 ELEVATION
SCALE: 1/2" = 1'- 0" ITEM: 2-157
ROOM: 2.026.02
ARCH. REF: A2/A11.7

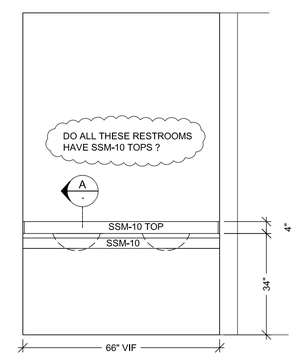

6 ELEVATION
SCALE: 1/2" = 1'- 0" ITEM: 2-156
ROOM: 2.026.01
ARCH. REF: A2/A11.7

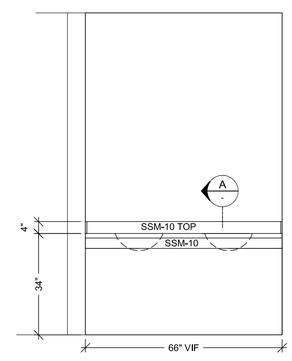

4 ELEVATION
SCALE: 1/2" = 1'- 0" ITEM: 2-155
ROOM: 2.113.29
ARCH. REF: A2/A11.7

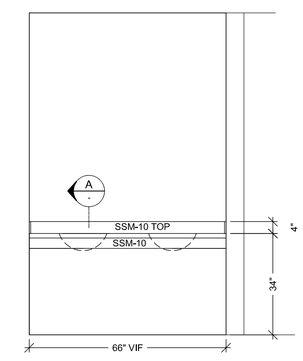

2 ELEVATION
SCALE: 1/2" = 1'- 0" ITEM: 2-154
ROOM: 2.113.28
ARCH. REF: A2/A11.7

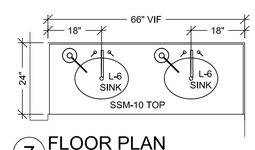

7 FLOOR PLAN
SCALE: 1/2" = 1'- 0" ITEM: 2-157
ROOM: 2.026.02
ARCH. REF: A3.2D

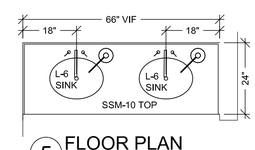

5 FLOOR PLAN
SCALE: 1/2" = 1'- 0" ITEM: 2-156
ROOM: 2.026.01
ARCH. REF: A3.2D

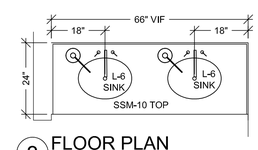

3 FLOOR PLAN
SCALE: 1/2" = 1'- 0" ITEM: 2-155
ROOM: 2.113.29
ARCH. REF: A3.2G

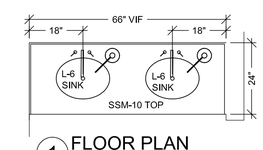

1 FLOOR PLAN
SCALE: 1/2" = 1'- 0" ITEM: 2-154
ROOM: 2.113.28
ARCH. REF: A3.2G

RELEASE FOR PRODUCTION
SIGNATURE:
DATE:
NOTE: NO CHANGES CAN BE MADE AFTER AUTHORIZATION TO PROCEED.

DATE	NO	REVISION	SUB. #	BY
2-13-12	1	PER R.L.C. DATED 12-19-11	–	JB
–	2	–	–	
–	3	–	–	
–	4	–	–	
–	5	–	–	
–	6	–	–	
2-29-12	7	PARTIAL FIELD DIMENSIONS	–	MW

PROJECT :
CHOC HOSPITAL
TOWER II
455 S. MAIN STREET
ORANGE, CA. 92868

FLOOR : SECOND LEVEL
ROOM # : 2.026.01,2.026.02,2.113.38
ITEM : TOPS & CABINETS
REF : A9.0,A2/A11.7,A3.2D,A3.2G
ITEM # : 2-154 - 59

ARCHITECT :
FKP ARCHITECTS

CONTRACTOR :
McCARTHY

COPYRIGHT
ALL IDEAS DESIGNS, ARRANGEMENTS AND PLANS INDICATED OR REPRESENTED BY THIS DRAWING ARE OWNED BY, AND THE PROPERTY OF P.A.M. AND WERE CREATED,EVOLVED AND DEVELOPED FOR USE ON, AND IN CONECTION WITH THE SPECIFIED PROJECT. NONE OF SUCH IDEAS, DESIGNS, ARRANGEMENT OF PLANS OR OTHER WORK MAY BE DISCLOSED TO PERSONS, FIRM OR CORPORATION FOR ANY PURPOSE WHATSOEVER WITHOUT THE WRITTEN PERMISSION OF P.A.M.

FIELD VERIFICATION
P.A.M. SHOP DRAWINGS ARE MADE FOR THE EXCLUSIVE USE OF P.A.M. AND ANY OTHER TRADES USING THESE DRAWING USE THEM AT THERE OWN RISK. DIMENSIONS ON THESE DRAWINGS MAY NOT BE ALWAYS NOTED. FIELD CONDITIONS MAY REQUIRE CHANGES IN DIMENSIONS. SO OTHER TRADES USING THESE DRAWINGS MUST TAKE THEIR OWN FIELD DIMENSIONS.

PACIFIC ARCHITECTURAL MILLWORK
1041 LESLIE ST. LA HABRA, CA. 90631
PH: (714) 522-2059 FAX: (714) 522-2873

DATE: 10-28-11
DRAWN BY: JB
SCALE: NOTED
JOB: 3635
SUBMITTAL: 28
DWG: 2.51
SHEET(S):

FINISH SCHEDULE

SSM 1	- SOLID SURFACE WALL PANELS AVONITE WHITE SANDS K1 6636 SATIN

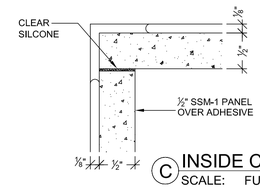

C INSIDE CORNER
SCALE: FULL

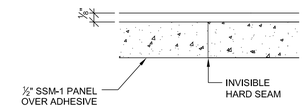

D VERTICAL JOINT
SCALE: FULL

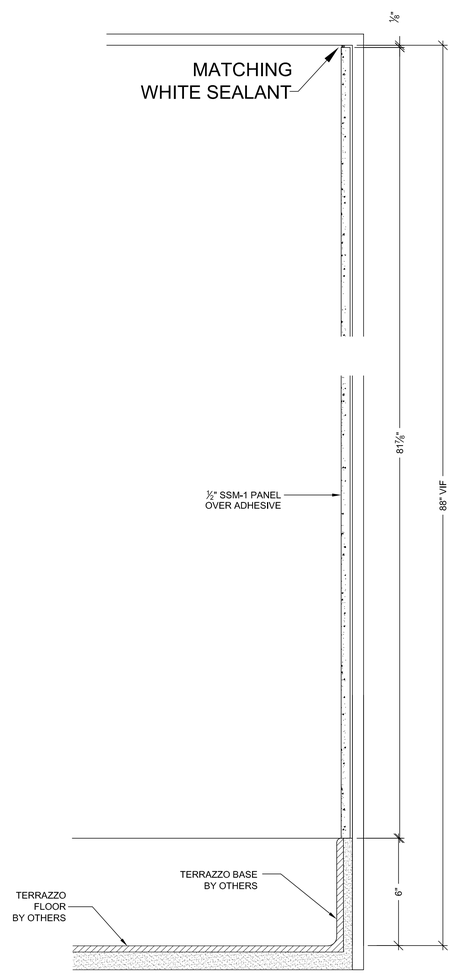

B VERTICAL SECTION
SCALE: 3"=1-0"

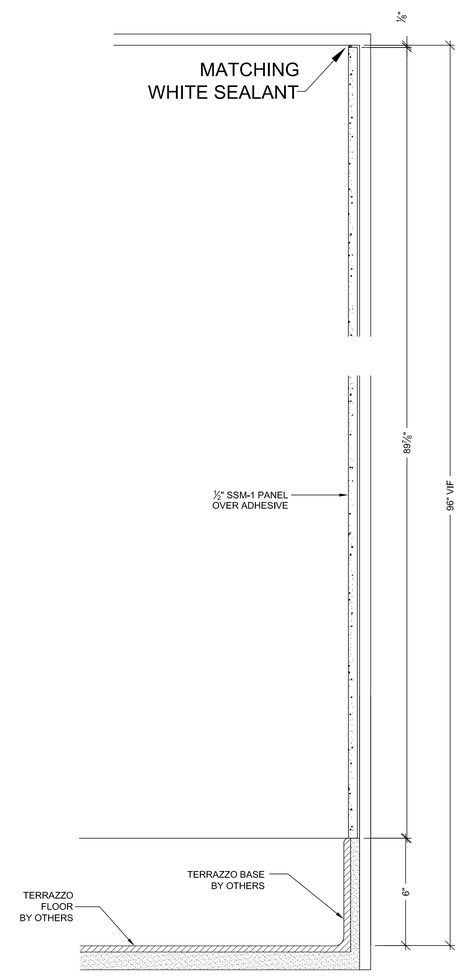

A VERTICAL SECTION
SCALE: 3"=1-0"

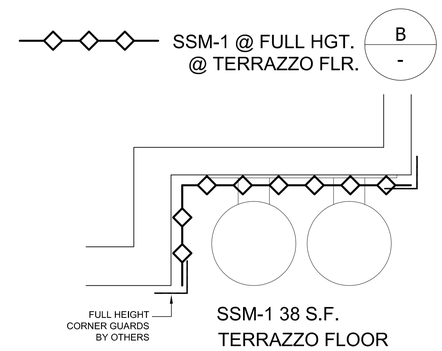

2 FLOOR PLAN
SCALE: 1" = 1'- 0" ITEM: 2-162
ROOM: 2.115.00.C
ARCH. REF: A3.2L
CORRIDOR

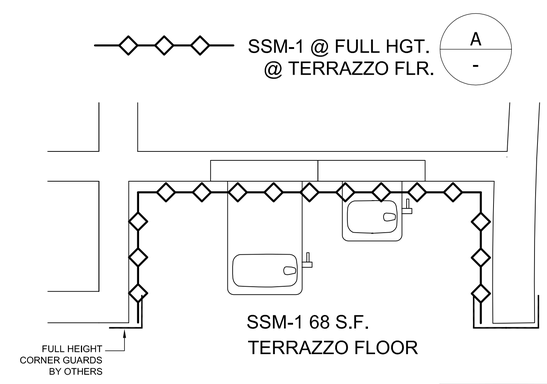

1 FLOOR PLAN
SCALE: 1" = 1'- 0" ITEM: 2-162
ROOM: 2.063.00.C
ARCH. REF: A3.2G
CORRIDOR

RELEASE FOR PRODUCTION
SIGNATURE:
DATE:
NOTE: NO CHANGES CAN BE MADE AFTER AUTHORIZATION TO PROCEED.

DATE	NO	REVISION	SUB. #	BY
-	/1\	-	-	X
-	/2\	-	-	-
-	/3\	-	-	-
-	/4\	-	-	-
-	/5\	-	-	-
-	/6\	-	-	-

PROJECT :
CHOC HOSPITAL
TOWER II
455 S. MAIN STREET
ORANGE, CA. 92868

FLOOR : SECOND LEVEL
ROOM # : 2.063.00.C, 2.115.00.C
ITEM : SOLID SURFACE WALL PANELS
ITEM # : 2-162
REF :

CONTRACTOR :
McCARTHY

ARCHITECT :
FKP ARCHITECTS

COPYRIGHT
ALL IDEAS DESIGNS, ARRANGEMENTS AND PLANS INDICATED OR REPRESENTED BY THIS DRAWING ARE THE PROPERTY OF PACIFIC MILLWORK AND WERE CREATED, EVOLVED AND DEVELOPED FOR USE ON, AND IN CONNECTION WITH THE SPECIFIED PROJECT. NONE OF SUCH IDEAS, DESIGNS, ARRANGEMENT OF PLANS SHALL BE USED BY OR DISCLOSED TO ANY PERSON, FIRM OR CORPORATION FOR ANY PURPOSE WHATSOEVER WITHOUT THE WRITTEN PERMISSION OF PMI.

FIELD VERIFICATION
PLAN, SHOP DRAWINGS ARE MADE FOR THE EXCLUSIVE USE OF PMI. OTHER TRADES MUST NOT USE THESE DRAWING USE THEM AT THEIR OWN RISK. DIMENSIONS ON THESE DRAWINGS MAY NOT BE ALWAYS NOTED. FIELD CONDITIONS MAY REQUIRE CHANGES IN DIMENSIONS, SO OTHER TRADES USING THESE DRAWINGS MUST TAKE THEIR OWN FIELD DIMENSIONS.

PACIFIC
ARCHITECTURAL MILLWORK
1041 LESLIE ST. LA HABRA, CA. 90631
PH: (714) 525-6259 FAX: (714) 525-6273

DATE: 11-7-11	
DRAWN BY: JB	SCALE: NOTED
JOB: 3635	SUBMITTAL: 32
DWG: 2.52	
	SHEET(S):

HARDWARE SCHEDULE

	ITEM	PART NO.	MANUF.	FINISH / COLOR
1	Z-CLIPS 2" L	PR5403-AM	PARAMOUNT	ALUMINUM
2	Z-CLIPS 72" L	PR5403-72AM	PARAMOUNT	ALUMINUM
3	RUBBER SEALS	9141K924	MCMASTER	BLACK
4				
5				
6				
7				
8				
9				
10				
11				

FINISH SCHEDULE

A 1	1/2" 3FORM - (LIGHT BOX) CHROMA MAI TAI + GHOST FF: RENEW. MATTE BF: MATTE
A 2	1/2" 3FORM - (LIGHT BOX) CHROMA VITAMIN C + GHOST FF: RENEW. MATTE BF: MATTE
A 3	1/2" 3FORM - (LIGHT BOX) CHROMA CRANBERRY + GHOST FF: RENEW. MATTE BF: MATTE
A 4	1/2" 3FORM - (LIGHT BOX) CHROMA VIOLET + GHOST FF: RENEW. MATTE BF: MATTE
A 5	1/2" 3FORM - (LIGHT BOX) CHROMA COBALT + GHOST FF: RENEW. MATTE BF: MATTE
A 6	1/2" 3FORM - (LIGHT BOX) CHROMA SURF + GHOST FF: RENEW. MATTE BF: MATTE
A 7	1/2" 3FORM - (LIGHT BOX) CHROMA LAWN + GHOST FF: RENEW. MATTE BF: MATTE
SS B	STAINLESS STEEL BASE 18 GAUGE W/ #4 BRUSHED FINISH

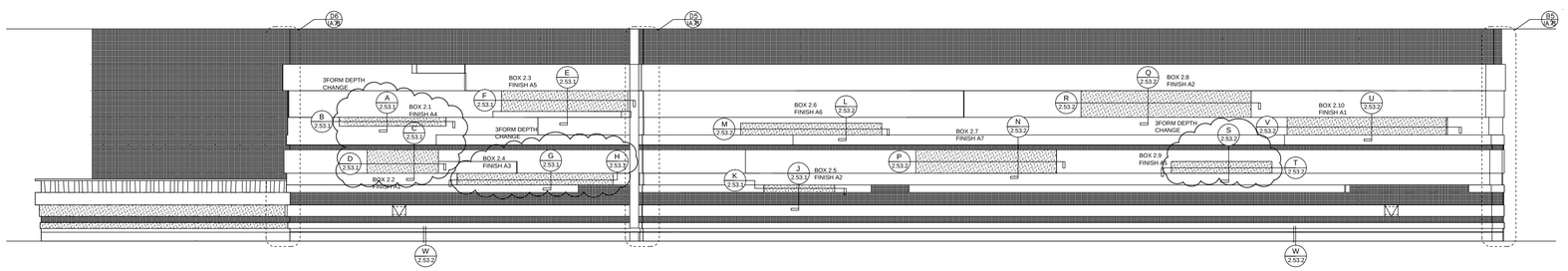

2 ELEVATION

SCALE: 1/4"=12" ROOM: 2.000.00.C
REF: A6/IA7.8 ITEM: 2-164,2-165

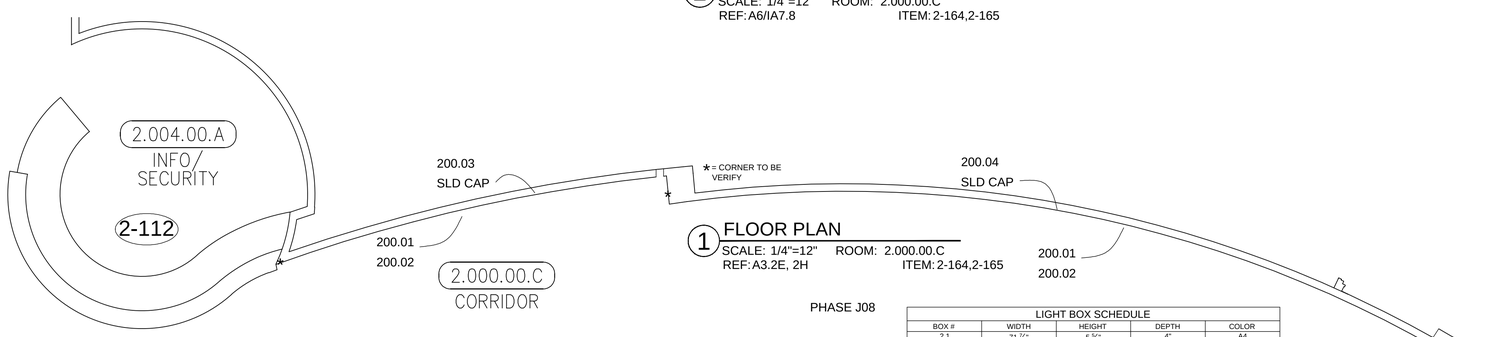

1 FLOOR PLAN

SCALE: 1/4"=12" ROOM: 2.000.00.C
REF: A3.2E, 2H ITEM: 2-164,2-165

PHASE J08

LIGHT BOX SCHEDULE

BOX #	WIDTH	HEIGHT	DEPTH	COLOR
2.1	71 7/8"	5 5/8"	4"	A4
2.2	53 3/4"	15 3/8"	4"	A1
2.3	ON HOLD	13 3/8"	11"	A5
2.4	107 3/4"	7 1/2"	4"	A3
2.5	48"	4 3/8"	5"	A2
2.6	95 3/4"	7 1/2"	7"	A6
2.7	95 7/8"	15 1/2"	5"	A7
2.8	119 5/8"	17 7/8"	7"	A2
2.9	71 3/4"	7 5/8"	4"	A5
2.10	119 5/8"	11 7/8"	5 3/8"	A1

MCCARTHY APPROVAL

A. Approved as noted for Architectural Review ☐
B. Review and Resubmit ☐
C. Rejected ☐

This review is for general conformance with Plans and Specifications only. Any deviations from same not clearly noted by the Preparer have not been reviewed. Review shall not constitute a complete check of detailed dimensions or count to serve to relieve the Preparer of contractual responsibility for any error or deviation from contract requirements.

McCarthy

By _____ Date _____ _____

SHOP DRAWING REFERENCE NO. _____

RELEASE FOR PRODUCTION

SIGNATURE:

DATE: 04/29/2011

NOTE: NO CHANGES CAN BE MADE AFTER AUTHORIZATION TO PROCEED.

DATE:	NO	REVISION:	SHE #	BY
11-30-11	2A	PER C.O. #176 DATED 7-18-11	33	JB
3-5-12	2A	FIELD DIMENSIONS	--	JB
--	4	--	--	
--	5	--	--	
--	6	--	--	
5-07-2012		J08 RELEASED TO SHOP PER APPROVED DRAWINGS & FD	--	JJA

PROJECT :
CHOC HOSPITAL
TOWER II
455 S. MAIN STREET
ORANGE, CA. 92868

ITEM # : 1-279,280

CONTRACTOR :
McCARTHY

FLOOR : SECOND LEVEL
ROOM # : 2.000.00.C
ITEM : FEATURE WALL LIGHT BOXES & BASE
REF : A3.2E,2H,IA7.8,9

ARCHITECT :
FKP ARCHITECTS

COPYRIGHT

ALL IDEAS DESIGNS, ARRANGEMENTS AND PLANS INDICATED OR REPRESENTED BY THIS DRAWING ARE OWNED BY AND THE PROPERTY OF PACIFIC MILLWORK CREATED,EVOLVED AND DEVELOPED FOR USE ON, AND IN CONECTION WITH THE SPECIFIED PROJECT. NONE OF SUCH IDEAS, DESIGNS, ARRANGEMENT OF PLANS SHALL BE USED BY OR DISCLOSED TO ANY PERSON, FIRM OR CORPORATION FOR ANY PURPOSE WHATSOEVER WITHOUT THE WRITTEN PERMISSION OF PMI.

FIELD VERIFICATION

P.A.M. SHOP DRAWINGS ARE MADE FOR THE EXCLUSIVE USE OF THE PROJECT SPECIFIED. THOSE WHO MAY DRAWING USE THEM AT THERE OWN RISK. DIMENSIONS ON THESE DRAWINGS MAY NOT BE ALWAYS NOTED. FIELD CONDITIONS MAY REQUIRE CHANGES IN DIMENSIONS, SO OTHER TRADES USING THESE DRAWINGS MUST TAKE THIER OWN FIELD DIMENSIONS.

PACIFIC MILLWORK
ARCHITECTURAL
1041 LESLIE ST. LA HABRA, CA. 90631
PH: (714) 525-2059 FAX: (714) 525-2673

DATE: 11-30-11	
DRAWN BY: JB	SCALE: NOTED
JOB: 3635	SUBMITTAL: 33
DWG: 2.53	
J08	SHEET(S):

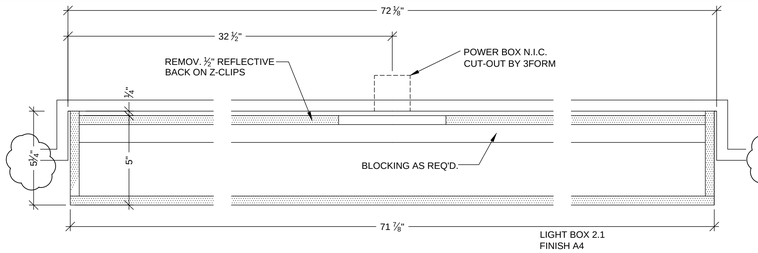

B PLAN SECTION
SCALE: 3"=1'-0"

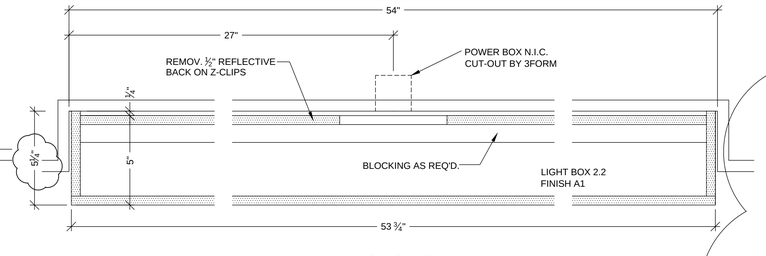

D PLAN SECTION
SCALE: 3"=1'-0"

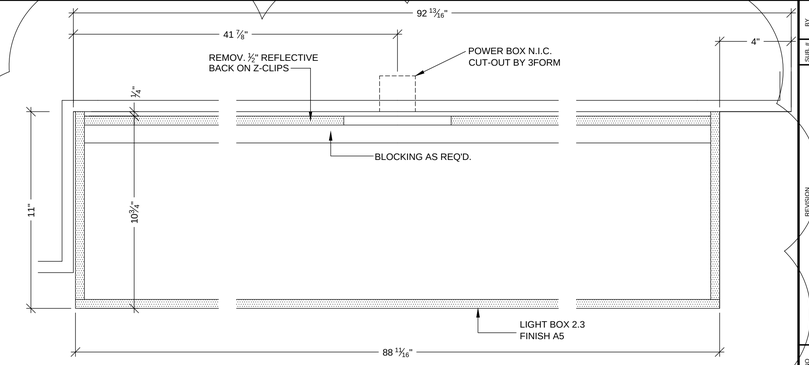

F PLAN SECTION
SCALE: 3"=1'-0"

RELEASED

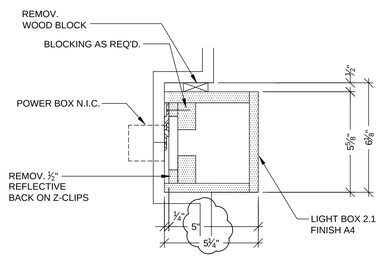

A VERTICAL SECTION
SCALE: 3"=1'-0"

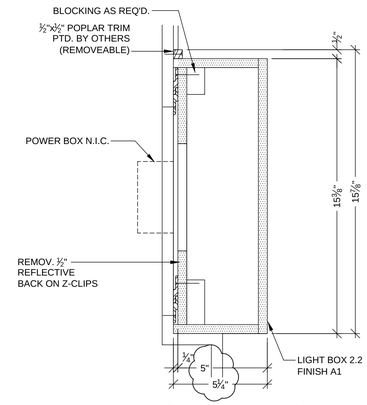

C VERTICAL SECTION
SCALE: 3"=1'-0"

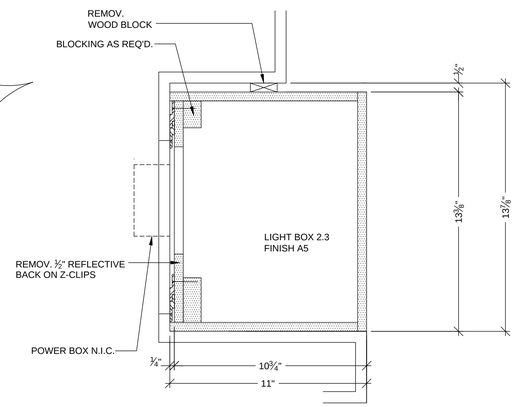

E VERTICAL SECTION
SCALE: 3"=1'-0"

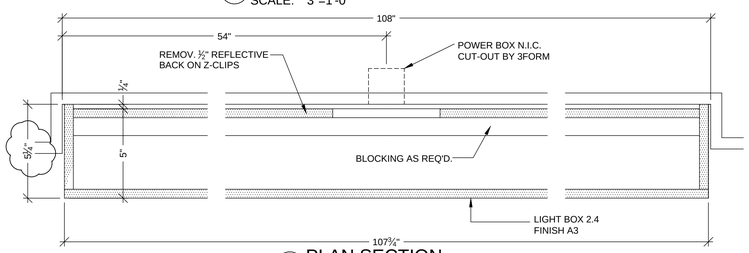

H PLAN SECTION
SCALE: 3"=1'-0"

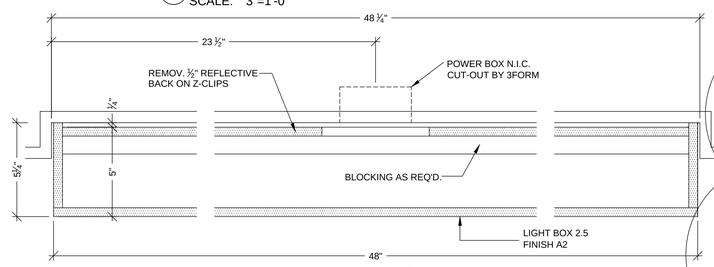

K PLAN SECTION
SCALE: 3"=1'-0"

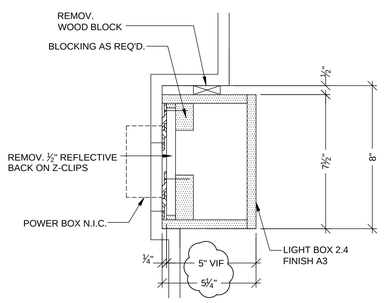

G VERTICAL SECTION
SCALE: 3"=1'-0"

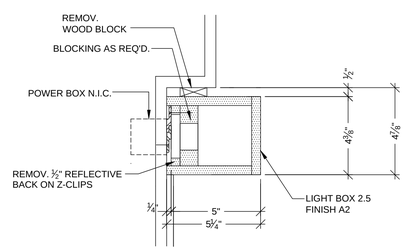

J VERTICAL SECTION
SCALE: 3"=1'-0"

MCCARTHY APPROVAL

A. Approved as noted for Architectural Review ☐
B. Review and Resubmit ☐
C. Rejected ☐

This review is for general conformance with Plans and Specifications only. Any deviations from same not clearly noted by the Preparer have not been reviewed. Review shall not constitute a complete check of detailed dimensions or count to serve to relieve the Preparer of contractual responsibility for any error or deviation from contract requirements.

McCarthy

By _____ Date _____ _____

SHOP DRAWING REFERENCE NO. _____

RELEASE FOR PRODUCTION
SIGNATURE: _____
DATE: 04/29/2011
NOTE: NO CHANGES CAN BE MADE AFTER AUTHORIZATION TO PROCEED.

NO.	DATE	REVISION	SHEET #	BY
2A	11-30-11	PER C.O. #176 DATED 7-18-11	33	JB
3	3-5-12	FIELD DIMENSIONS		JB
4				
5				
6				

PROJECT : CHOC HOSPITAL TOWER II
455 S. MAIN STREET ORANGE, CA. 92868

ITEM # : 1.279.280

CONTRACTOR : McCARTHY

FLOOR : SECOND LEVEL
ROOM # : 2.000.00.C
ITEM : FEATURE WALL LIGHT BOXES & BASE
REF : A3.2E.2H.IA7.8,9

ARCHITECT : FKP ARCHITECTS

COPYRIGHT
ALL IDEAS, DESIGNS, ARRANGEMENTS AND PLANS INDICATED OR REPRESENTED BY THIS DRAWING ARE OWNED BY, AND THE PROPERTY OF P.A.M. AND WERE CREATED,EVOLVED AND DEVELOPED FOR USE ON, AND IN CONECTION WITH THE SPECIFIED PROJECT. NONE OF SUCH IDEAS, DESIGNS, ARRANGEMENT OF PLANS MAY BE USED BY ANY PERSON, FIRM OR PERSON, FIRM OR CORPORATION FOR ANY PURPOSE WHATSOEVER WITHOUT THE WRITTEN PERMISSION OF P.A.M.

FIELD VERIFICATION
P.A.M. SHOP DRAWINGS ARE MADE FOR THE EXCLUSIVE USE OF P.A.M. AND ANY OTHER TRADES USING THESE DRAWING USE THEM AT THERE OWN RISK. DIMENSIONS ON THESE DRAWINGS MAY NOT BE ALWAYS NOTED. FIELD CONDITIONS MAY REQUIRE CHANGES IN DIMENSIONS, SO OTHER TRADES USING THESE DRAWINGS MUST TAKE THEIR OWN FIELD DIMENSIONS.

PACIFIC ARCHITECTURAL MILLWORK
1041 LESLIE ST. LA HABRA, CA. 90631
PH: (714) 525-2059 FAX: (714) 525-2673

DATE: 11-30-11
DRAWN BY: JB | SCALE: NOTED
JOB: 3635 | SUBMITTAL: 33
DWG: 2.53.1
SHEET(S):

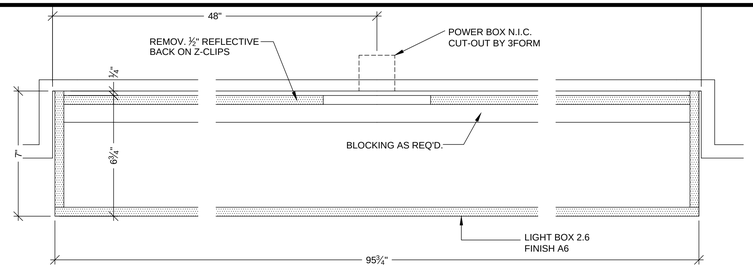

M PLAN SECTION
SCALE: 3"=1'-0"

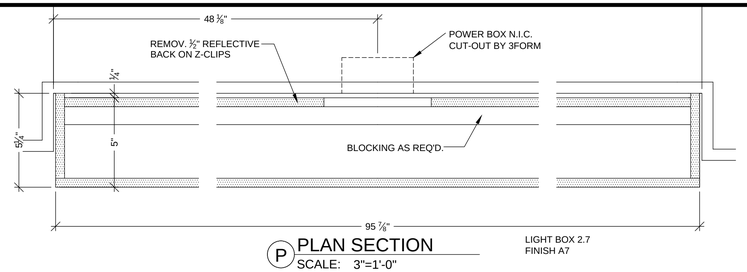

P PLAN SECTION
SCALE: 3"=1'-0"

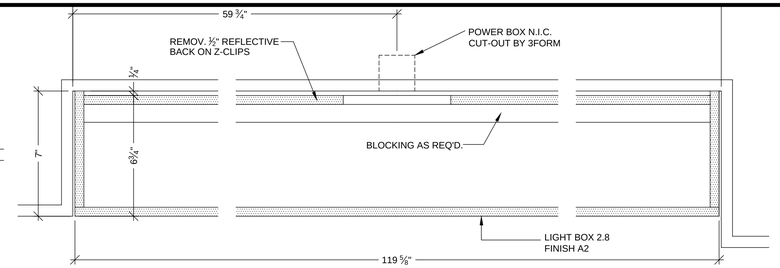

R PLAN SECTION
SCALE: 3"=1'-0"

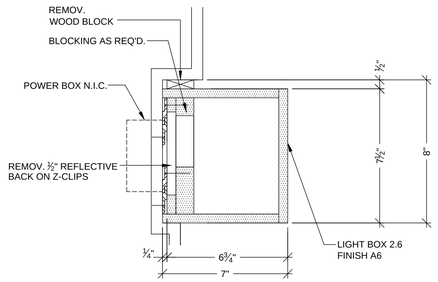

L VERTICAL SECTION
SCALE: 3"=1'-0"

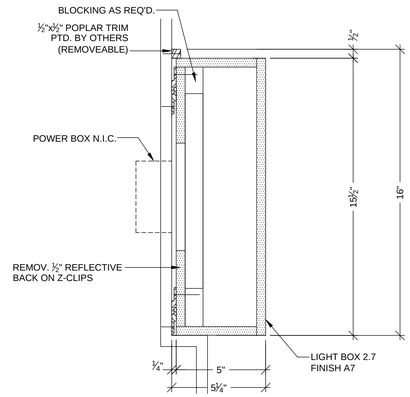

N VERTICAL SECTION
SCALE: 3"=1'-0"

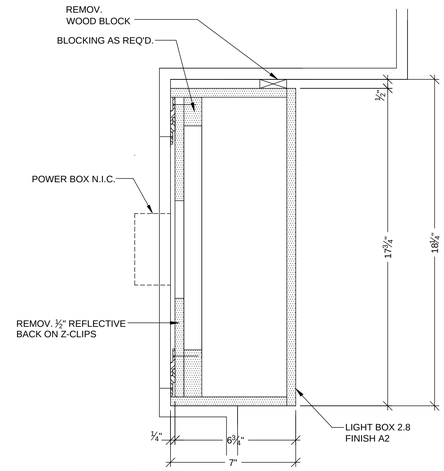

Q VERTICAL SECTION
SCALE: 3"=1'-0"

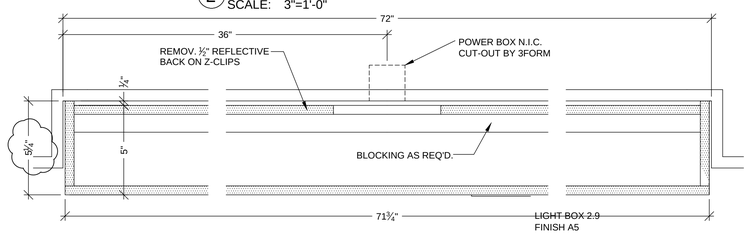

T PLAN SECTION
SCALE: 3"=1'-0"

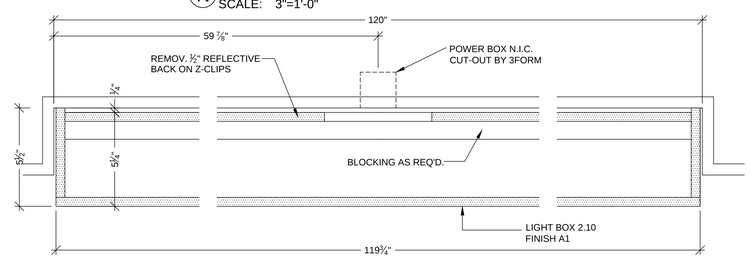

V PLAN SECTION
SCALE: 3"=1'-0"

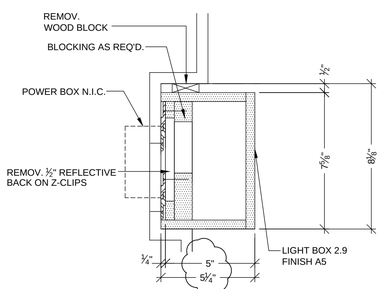

S VERTICAL SECTION
SCALE: 3"=1'-0"

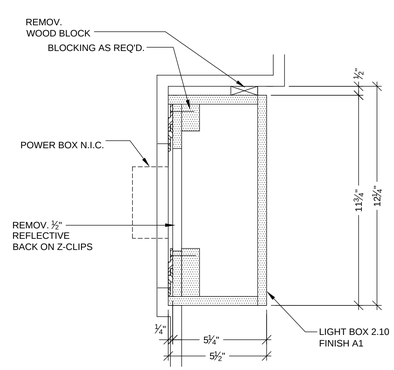

U VERTICAL SECTION
SCALE: 3"=1'-0"

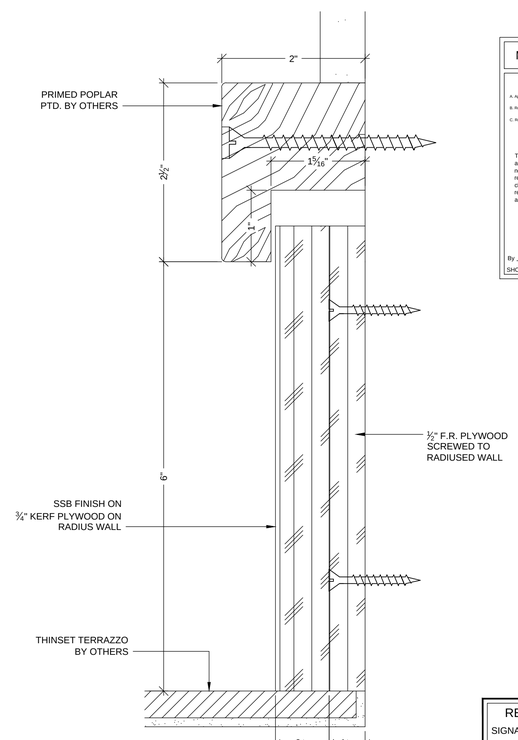

W BASE DETAIL
SCALE: FULL
REF: B6/IA7.7 80 L. FT.

MCCARTHY APPROVAL

A. Approved as noted for Architectural Review ☐
B. Review and Resubmit ☐
C. Rejected ☐

This review is for general conformance with Plans and Specifications only. Any deviations from same not clearly noted by the Preparer have not been reviewed. Review shall not constitute a complete check of detailed dimensions or count to serve to relieve the Preparer of contractual responsibility for any error or deviation from contract requirements.

McCarthy

By _____ Date _____

SHOP DRAWING REFERENCE NO. _____

RELEASE FOR PRODUCTION
SIGNATURE:
DATE: 04/29/2011
NOTE: NO CHANGES CAN BE MADE AFTER AUTHORIZATION TO PROCEED.

DATE:	NO:	REVISION:	SHE #	BY
11-30-11	2	PER C.O. #176 DATED 7-18-11	33	JB
3-5-12	3	FIELD DIMENSIONS	–	JB
	4		–	
	5		–	
	6		–	
5-07-2012	–	J08 RELEASED TO SHOP PER APPROVED DRAWINGS & FD	–	JJA

PROJECT : CHOC HOSPITAL TOWER II
455 S. MAIN STREET ORANGE, CA. 92868

ITEM # : 1-279.280

CONTRACTOR : McCARTHY

FLOOR : SECOND LEVEL
ROOM # : 2.000.00.C
ITEM : FEATURE WALL LIGHT BOXES & BASE
REF : A3.2/E.2H.IA7.8,9

ARCHITECT : FKP ARCHITECTS

COPYRIGHT
ALL IDEAS DESIGNS, ARRANGEMENTS AND PLANS INDICATED OR REPRESENTED BY THIS DRAWING ARE OWNED BY, AND THE PROPERTY OF P.A.M. AND WERE CREATED,EVOLVED AND DEVELOPED FOR USE ON, AND IN CONECTION WITH THE SPECIFIED PROJECT. NONE OF SUCH IDEAS, DESIGNS, ARRANGEMENT OF PLANS SHALL BE USED BY OR DISCLOSED TO ANY PERSON, FIRM OR CORPORATION FOR ANY PURPOSE WHATSOEVER WITHOUT THE WRITTEN PERMISSION OF P.A.M.

FIELD VERIFICATION
P.A.M. SHOP DRAWINGS ARE MADE FOR THE EXCLUSIVE USE OF P.A.M. AND ANY OTHER TRADES USING THESE DRAWING USE THEM AT THERE OWN RISK. DIMENSIONS ON THESE DRAWINGS MAY NOT BE ALWAYS NOTED, FIELD CONDITIONS MAY REQUIRE CHANGES IN DIMENSIONS, SO OTHER TRADES USING THESE DRAWINGS MUST TAKE THEIR OWN FIELD DIMENSIONS.

PACIFIC ARCHITECTURAL MILLWORK
1041 LESLIE ST. LA HABRA, CA. 90631
PH: (714) 525-2059 FAX: (714) 525-2673

DATE: 11-30-11
DRAWN BY: JB
SCALE: NOTED
JOB: 3635
SUBMITTAL: 33
DWG: 2.53.2
SHEET(S): J08

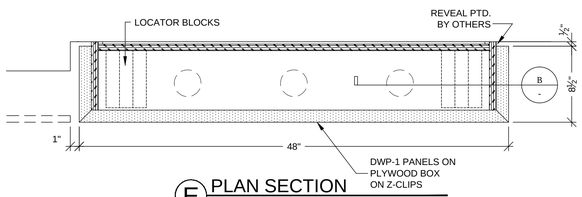

E PLAN SECTION
SCALE: 1 1/2"=12"
REF:IA7.1

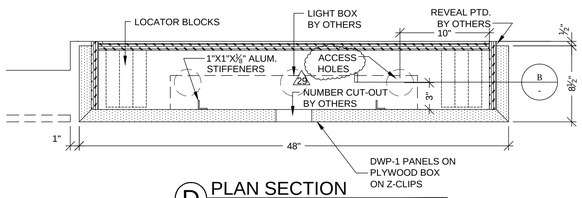

D PLAN SECTION
SCALE: 1 1/2"=12"
REF:IA7.1

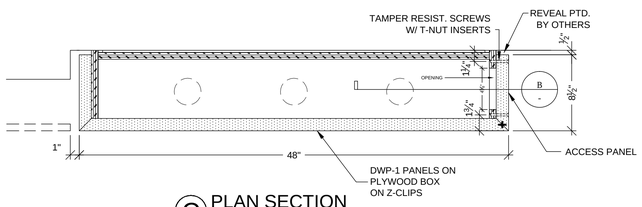

C PLAN SECTION
SCALE: 1 1/2"=12"
REF:IA7.1

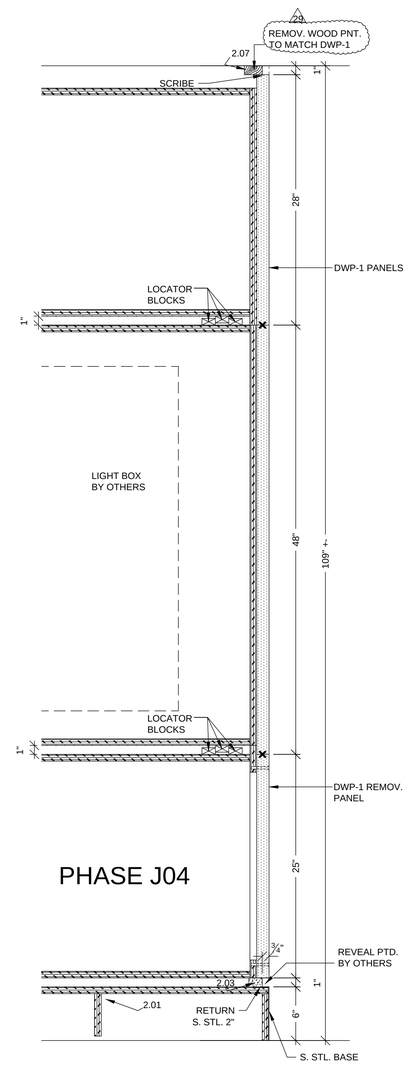

B SECTION
SCALE: 1 1/2"=12"
REF:NONE

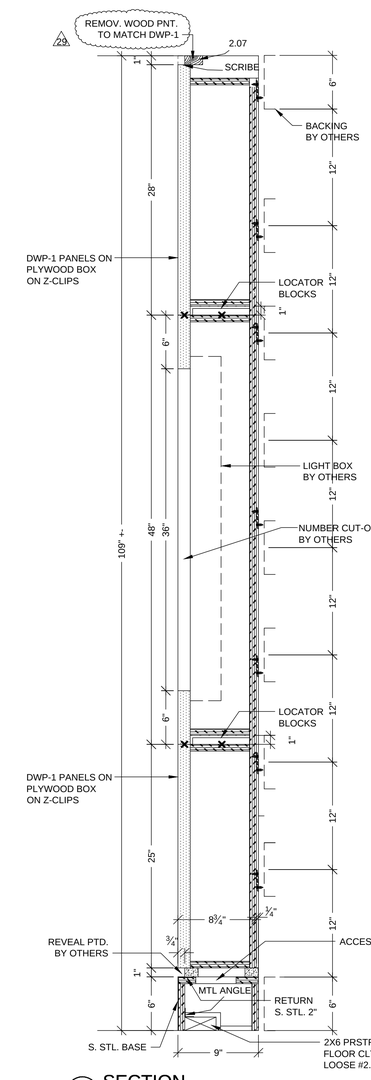

A SECTION
SCALE: 1 1/2"=12"
REF:NONE

MCCARTHY APPROVAL

A. Approved as noted for Architectural Review ☐
B. Review and Resubmit ☐
C. Rejected ☐

This review is for general conformance with Plans and Specifications only. Any deviations from same not clearly noted by the Preparer have not been reviewed. Review shall not constitute a complete check of detailed dimensions or count to serve to relieve the Preparer of contractual responsibility for any error or deviation from contract requirements.

McCarthy

By _____ Date _____

SHOP DRAWING REFERENCE NO. _____

RELEASE FOR PRODUCTION
SIGNATURE:
DATE: 04/29/2011
NOTE: NO CHANGES CAN BE MADE AFTER AUTHORIZATION TO PROCEED.

DATE	NO.	REVISION	SUB. #	BY
12-6-11	2	PER RFI #4109-0	35	JB
1-10-12	3	PER RLC DATED 12-19-11	–	JB
–	4	–	–	–
–	5	–	–	–
–	6	–	–	–
3-14-2012		J04 RELEASED TO SHOP PER APPROVED DRAWINGS & FD	–	JJA

PROJECT :
CHOC HOSPITAL
TOWER II
455 S. MAIN STREET
ORANGE, CA. 92868

FLOOR : SECOND LEVEL
ROOM # : 2.000.00.L
ITEM : ELEVATOR WALL PANELS
REF : A3.2E.2H.IA7.8,9
ITEM # : DWP-1

CONTRACTOR :
McCARTHY

ARCHITECT :
FKP ARCHITECTS

COPYRIGHT
ALL IDEAS DESIGNS, ARRANGEMENTS AND PLANS INDICATED OR REPRESENTED BY THIS DRAWING ARE OWNED BY, AND THE PROPERTY OF P.A.M. AND WERE CREATED,EVOLVED AND DEVELOPED FOR USE ON, AND IN CONECTION WITH THE SPECIFIED PROJECT. NONE OF SUCH IDEAS DESIGNS, ARRANGEMENTS AND PLANS SHALL BE USED BY OR DISCLOSED TO ANY PERSON, FIRM OR CORPORATION FOR ANY PURPOSE WHATSOEVER WITHOUT THE WRITTEN PERMISSION OF P.A.M.

FIELD VERIFICATION

P.A.M. SHOP DRAWINGS ARE MADE FOR THE EXCLUSIVE USE OF P.A.M. AND ANY OTHER TRADES USING THESE DRAWING USE THEM AT THERE OWN RISK. DIMENSIONS ON THESE DRAWINGS MAY NOT BE ALWAYS NOTED. FIELD CONDITIONS MAY REQUIRE CHANGES IN DIMENSIONS, SO OTHER TRADES USING THESE DRAWINGS MUST TAKE THEIR OWN FIELD DIMENSIONS.

PACIFIC ARCHITECTURAL MILLWORK
1041 LESLIE ST. LA HABRA, CA. 90631
PH: (714) 525-2059 FAX: (714) 525-2673

DATE: 12-6-11	
DRAWN BY: JB	SCALE: NOTED
JOB: 3635	SUBMITTAL: 35
DWG: 2.54.1	
J04	SHEET(S):

HARDWARE SCHEDULE

	ITEM	PART NO.	MANUF.	FINISH / COLOR
1	Z-CLIPS 2" L	PR5403-AM	PARAMOUNT	ALUMINUM
2	Z-CLIPS 72" L	PR5403-72AM	PARAMOUNT	ALUMINUM
3	1 1/4" SQUARE FOAM	93665K41	MCMASTER	CHARCOAL
4	10-24 X 2" F.H. MACH. SCREWS	94063A254	MCMASTER	ZINC PLATED
5	10-24 TEE-NUTS	90975A043	MCMASTER	ZINC PLATED
6				
7				
8				
9				
10				
11				

FINISH SCHEDULE

DWP 1 INTERLAM PANEL SST003 PAINTED BY OTHERS
CLASS A FIRE RATED

STAINLESS STEEL BASE W/ #4 FINISH

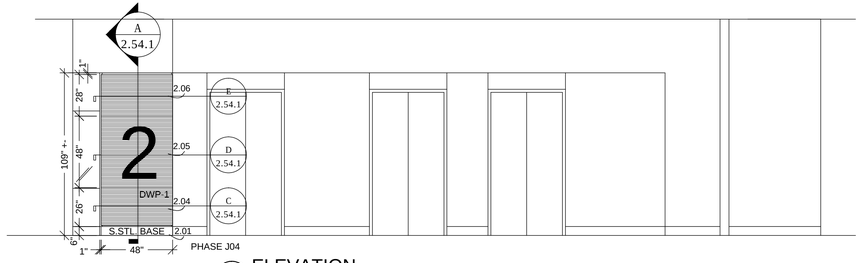

2 ELEVATION
SCALE: 1/4"=12" ROOM: 2.000.00.L
REF: E5/IA8.8 ITEM: DWP-1

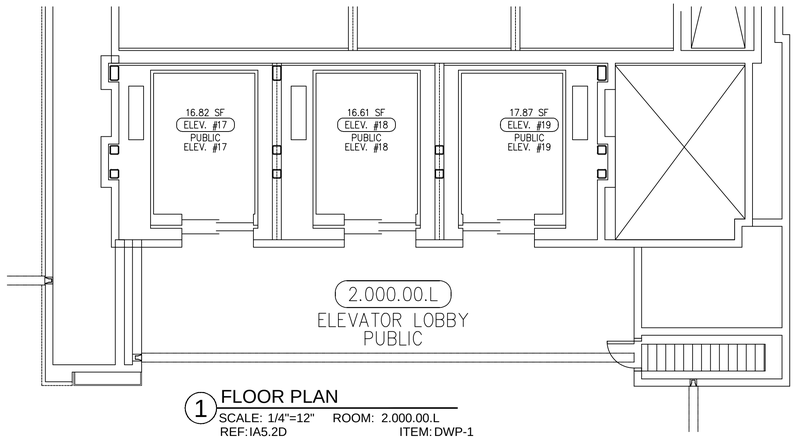

1 FLOOR PLAN
SCALE: 1/4"=12" ROOM: 2.000.00.L
REF: IA5.2D ITEM: DWP-1

MCCARTHY APPROVAL

A. Approved as noted for Architectural Review ☐
B. Review and Resubmit ☐
C. Rejected ☐

This review is for general conformance with Plans and Specifications only. Any deviations from same not clearly noted by the Preparer have not been reviewed. Review shall not constitute a complete check of detailed dimensions or count to serve to relieve the Preparer of contractual responsibility for any error or deviation from contract requirements.

McCarthy

By _____ Date _____

SHOP DRAWING REFERENCE NO. _____

RELEASE FOR PRODUCTION

SIGNATURE: _____

DATE: 04/29/2011

NOTE: NO CHANGES CAN BE MADE AFTER AUTHORIZATION TO PROCEED.

NO.	DATE	REVISION	SUB. #	BY
0	12-6-11	PER RFI #4109-0	35	JB
1	–	–	–	
2	–	–	–	
3	–	–	–	
4	–	–	–	
5	–	–	–	
6	3-14-2012	J04 RELEASED TO SHOP PER APPROVED DRAWINGS & FD	–	JJA

PROJECT :
CHOC HOSPITAL
TOWER II

455 S. MAIN STREET
ORANGE, CA. 92868

FLOOR : SECOND LEVEL
ROOM # : 2.000.00.L
ITEM : ELEVATOR WALL PANELS
REF : A3.2E;2H;IA7.8;9
ITEM #: DWP-1

CONTRACTOR :
McCARTHY

ARCHITECT :
FKP ARCHITECTS

COPYRIGHT
ALL IDEAS DESIGNS, ARRANGEMENTS AND PLANS INDICATED OR REPRESENTED BY THIS DRAWING ARE OWNED BY, AND THE PROPERTY OF P.A.M. AND WERE CREATED, EVOLVED AND DEVELOPED FOR USE ON AND IN CONNECTION WITH THE SPECIFIED PROJECT. NONE OF SUCH IDEAS, DESIGNS, ARRANGEMENT OF PLANS SHALL BE USED BY OR DISCLOSED TO ANY PERSON, FIRM OR CORPORATION FOR ANY PURPOSE WHATSOEVER WITHOUT THE WRITTEN PERMISSION OF P.A.M.

FIELD VERIFICATION

P.A.M. SHOP DRAWINGS ARE MADE FOR THE EXCLUSIVE USE OF P.A.M. AND ANY OTHER TRADES USING THESE DRAWINGS MUST TAKE THEIR OWN FIELD DIMENSIONS. ON THESE DRAWINGS MAY NOT BE ALWAYS NOTED. FIELD CONDITIONS MAY REQUIRE CHANGES IN DIMENSIONS. SO OTHER TRADES USING THESE DRAWINGS MUST TAKE THEIR OWN FIELD DIMENSIONS.

PACIFIC ARCHITECTURAL MILLWORK
1041 LESLIE ST. LA HABRA, CA. 90631
PH: (714) 525-2059 FAX: (714) 525-2673

DATE: 12-6-11
DRAWN BY: JB
SCALE: NOTED
JOB: 3635
SUBMITTAL: 35
DWG.: 2.54
J04
SHEET(S):

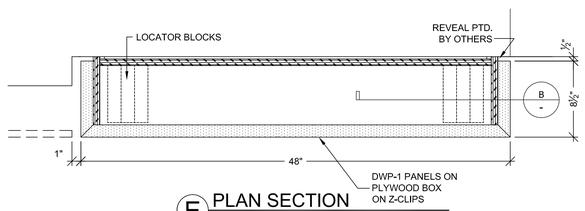

E PLAN SECTION
SCALE: 1 1/2"=12"
REF:IA7.1

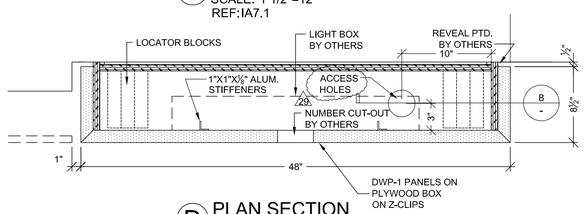

D PLAN SECTION
SCALE: 1 1/2"=12"
REF:IA7.1

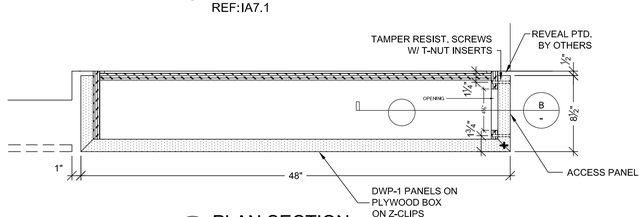

C PLAN SECTION
SCALE: 1 1/2"=12"
REF:IA7.1

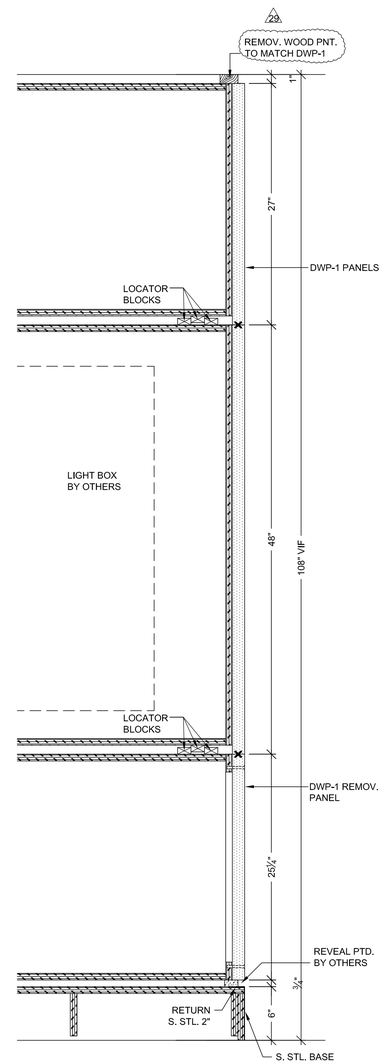

B SECTION
SCALE: 1 1/2"=12"
REF:NONE

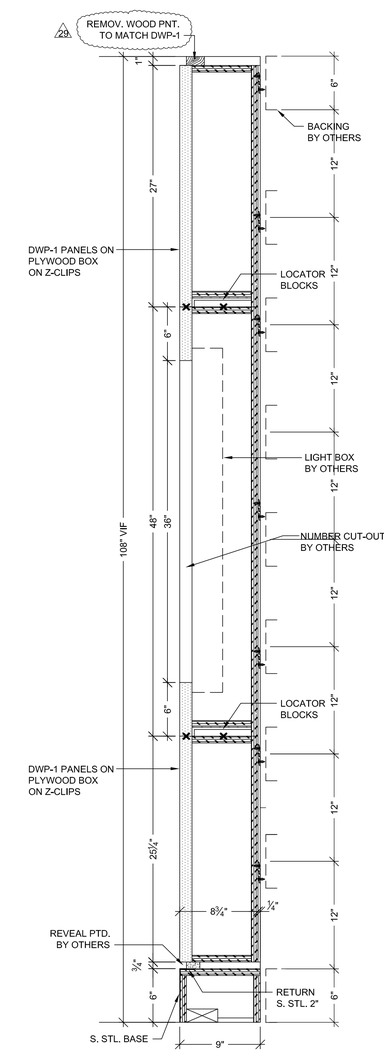

A SECTION
SCALE: 1 1/2"=12"
REF:NONE

MCCARTHY APPROVAL

A. Approved as noted for Architectural Review ☐
B. Review and Resubmit ☐
C. Rejected ☐

This review is for general conformance with Plans and Specifications only. Any deviations from same not clearly noted by the Preparer have not been reviewed. Review shall not constitute a complete check of detailed dimensions or count to serve to relieve the Preparer of contractual responsibility for any error or deviation from contract requirements.

McCarthy

By _____ Date _____

SHOP DRAWING REFERENCE NO. _____

RELEASE FOR PRODUCTION

SIGNATURE:

DATE: 04/29/2011

NOTE: NO CHANGES CAN BE MADE AFTER AUTHORIZATION TO PROCEED.

DATE	NO	REVISION	SUB. #	BY
12-6-11	2	PER RFI #4109-0	35	JB
1-10-12	3	PER RLC DATED 12-19-11	–	JB
–	4		–	
–	5		–	
–	6		–	

PROJECT :
CHOC HOSPITAL
TOWER II
455 S. MAIN STREET
ORANGE, CA. 92868

FLOOR : SECOND LEVEL
ROOM # : 2.000.00.L
ITEM : ELEVATOR WALL PANELS
REF : A3.2E.2H,IA7.8,9
ITEM # : DWP-1
CONTRACTOR : McCARTHY
ARCHITECT : FKP ARCHITECTS

COPYRIGHT
ALL IDEAS DESIGNS, ARRANGEMENTS AND PLANS INDICATED OR REPRESENTED BY THIS DRAWING ARE OWNED BY, AND THE PROPERTY OF PA.M. AND WERE CREATED,EVOLVED AND DEVELOPED FOR USE ON, AND IN CONNECTION WITH THE SPECIFIED PROJECT. NONE OF SUCH IDEAS, DESIGNS, ARRANGEMENT OF PLANS SHALL BE USED BY OR DISCLOSED TO ANY PERSON FOR ANY PURPOSE OTHER THAN THE PURPOSES SPECIFIED WITHOUT THE WRITTEN PERMISSION OF P.A.M.

FIELD VERIFICATION
P.A.M. SHOP DRAWINGS ARE MADE FOR THE EXCLUSIVE USE OF P.A.M. AND ANY OTHER TRADES USING THESE DRAWING USE THEM AT THERE OWN RISK. DIMENSIONS ON THESE DRAWINGS MAY NOT BE ALWAYS NOTED, FIELD CONDITIONS MAY REQUIRE CHANGES IN DIMENSIONS, SO OTHER TRADES USING THESE DRAWINGS MUST TAKE THEIR OWN FIELD DIMENSIONS.

PACIFIC ARCHITECTURAL MILLWORK
1041 LESLIE ST. LA HABRA, CA. 90631
PH: (714) 525-2093 FAX: (714) 525-2073

DATE: 12-6-11
DRAWN BY: JB
SCALE: NOTED
JOB: 3635
SUBMITTAL: 35
DWG: 2.54.1
SHEET(S):

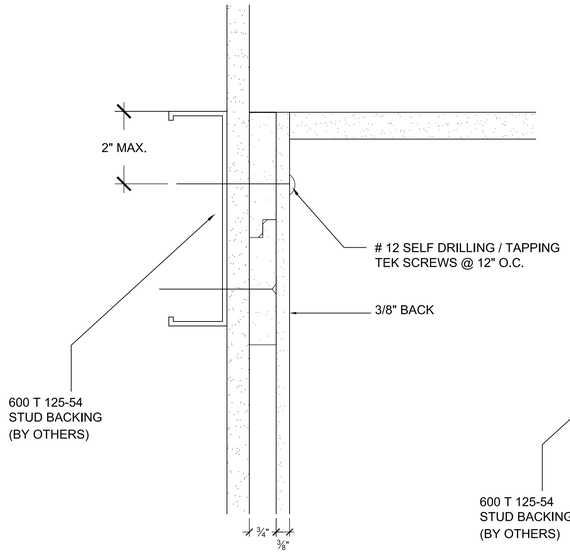

A ANCHORAGE DETAIL @ TALL/UPPER CAB. TOP
SCALE 6"=1'-0"

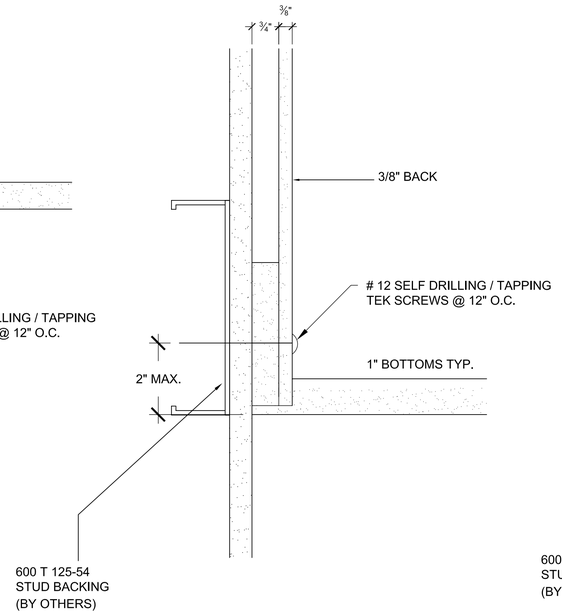

B ANCHORAGE DETAIL @ UPPER BOTTOM
SCALE 6"=1'-0"

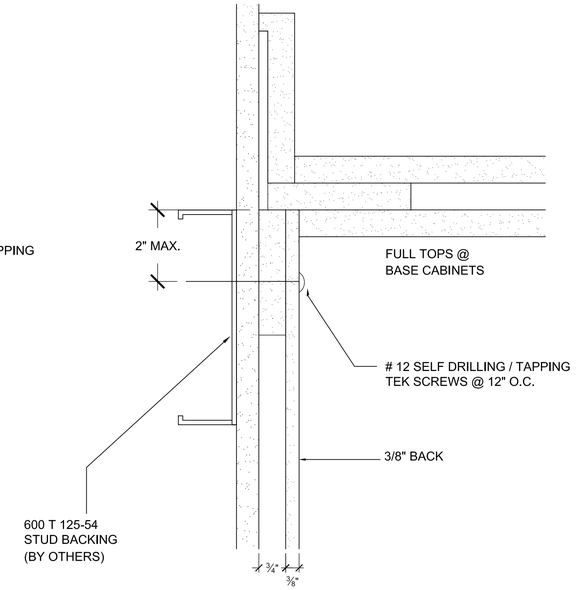

C ANCHORAGE DETAIL @ BASE CABINET
SCALE 6"=1'-0"

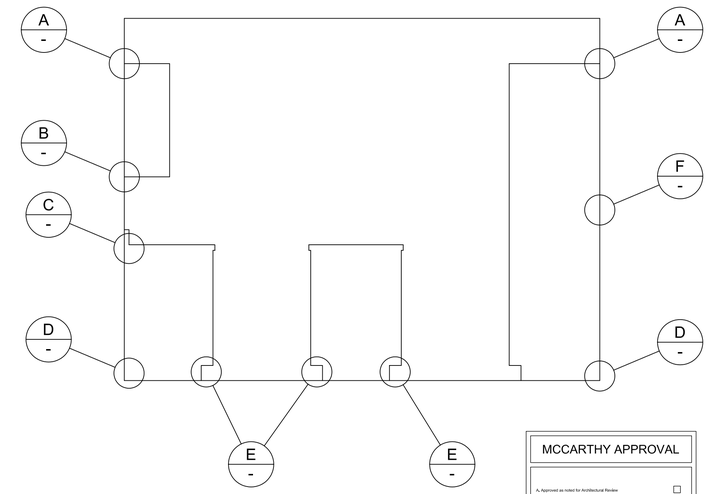

CABINET ANCHORAGE KEY PLAN
NO SCALE

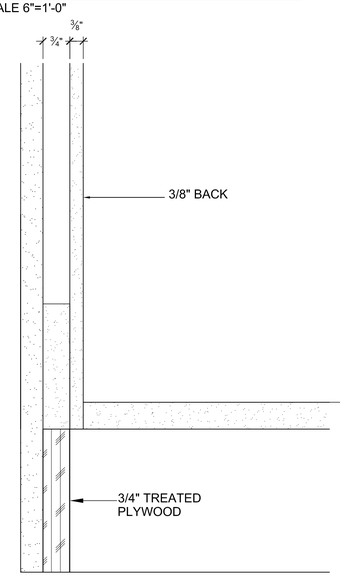

D ANCHORAGE DETAIL @ BASE CABINET
SCALE 6"=1'-0"

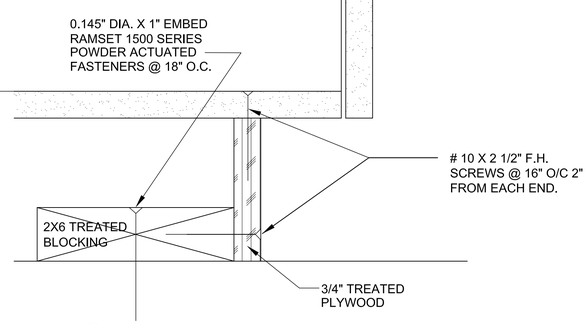

E ANCHORAGE DETAIL @ ISLAND TOE
SCALE 6"=1'-0"

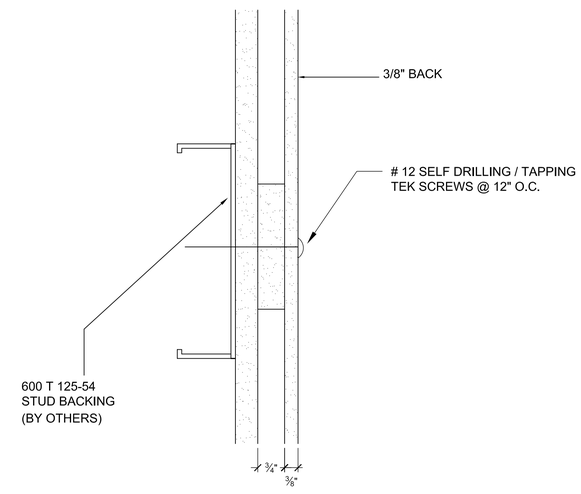

F ANCHORAGE DETAIL @ TALL MIDDLE
SCALE 6"=1'-0"

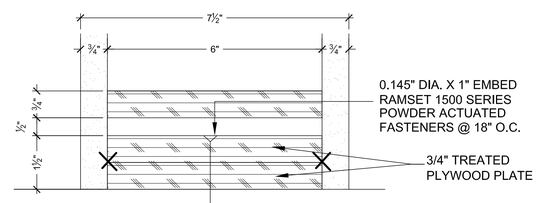

G ANCHORAGE DETAIL @ MILLWORK DYE WALL
SCALE 6"=1'-0"

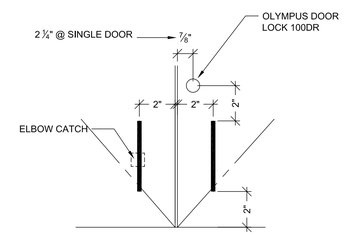

2 DETAIL
3"=1'-0"

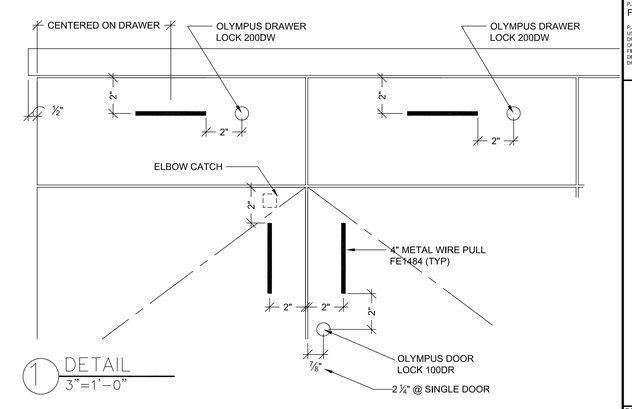

1 DETAIL
3"=1'-0"

MCCARTHY APPROVAL

A, Approved as noted for Architectural Review ☐
B, Review and Resubmit ☐
C, Rejected ☐

This review is for general conformance with Plans and Specifications only. Any deviations from same not clearly noted by the Preparer have not been reviewed. Review shall not constitute a complete check of detailed dimensions or count to serve to relieve the Preparer of contractual responsibility for any error or deviation from contract requirements.

McCarthy

By _____ Date _____

SHOP DRAWING REFERENCE NO. _____

RELEASE FOR PRODUCTION
SIGNATURE: _____
DATE: _____
NOTE: NO CHANGES CAN BE MADE AFTER AUTHORIZATION TO PROCEED.

DATE	NO	REVISION	SUB. #	BY
-	X	-	-	X
-	1A	-	-	
-	2A	-	-	
-	3A	-	-	
-	4A	-	-	
-	5A	-	-	
-	6A	-	-	

PROJECT:
CHOC HOSPITAL
TOWER II
455 S. MAIN STREET
ORANGE, CA. 92868

CABINET BACKING DETAILS

CONTRACTOR:
McCARTHY

ARCHITECT:
FKP ARCHITECTS

COPYRIGHT
ALL IDEAS DESIGNS, ARRANGEMENTS AND PLANS INDICATED OR REPRESENTED BY THE DRAWING ARE OWNED BY, AND THE PROPERTY OF P.A.M. AND WERE CREATED,EVOLVED AND DEVELOPED FOR USE ON AND IN CONNECTION WITH THE SPECIFIED PROJECT, NOT ANY OTHER PROJECT. NONE OF THE IDEAS DESIGNS PLANS SHALL BE USED BY OR DISCLOSED TO ANY PERSON, FIRM OR CORPORATION FOR ANY PURPOSE WHATSOEVER WITHOUT THE WRITTEN PERMISSION OF P.A.M.

FIELD VERIFICATION
P.A.M. SHOP DRAWINGS ARE MADE FOR THE EXCLUSIVE USE OF P.A.M. AND ANY OTHER TRADES USING THESE DRAWING USE THEM AT THERE OWN RISK. DIMENSIONS ON THESE DRAWINGS MAY NOT BE ALWAYS NOTED. FIELD CONDITIONS MAY REQUIRE CHANGES IN DIMENSIONS. SO OTHER TRADES USING THESE DRAWINGS MUST TAKE THEIR OWN FIELD DIMENSIONS.

PACIFIC
ARCHITECTURAL MILLWORK
1041 LESLIE ST. LA HABRA, CA. 90631
PH: (714) 525-2069 FAX: (714) 525-2073

DATE: 4-19-10	
DRAWN BY: JB	SCALE: NOTED
JOB: 3635	SUBMITTAL: 1
DWG: B-1	
	SHEET(S):

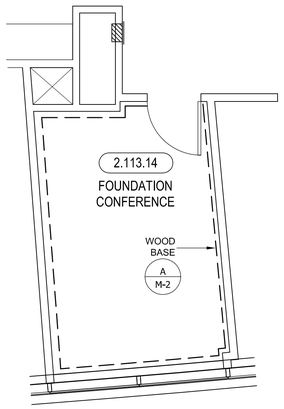

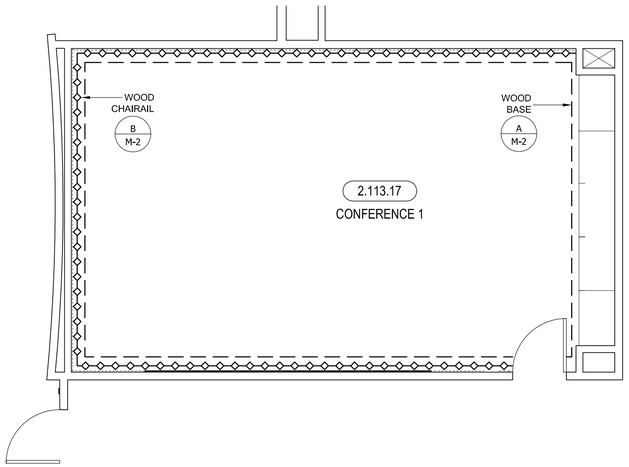

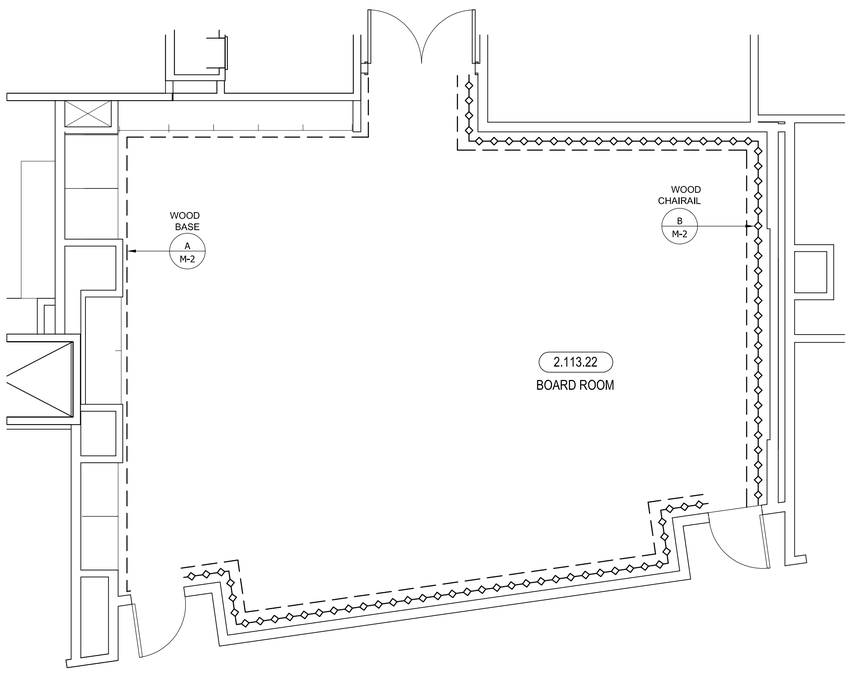

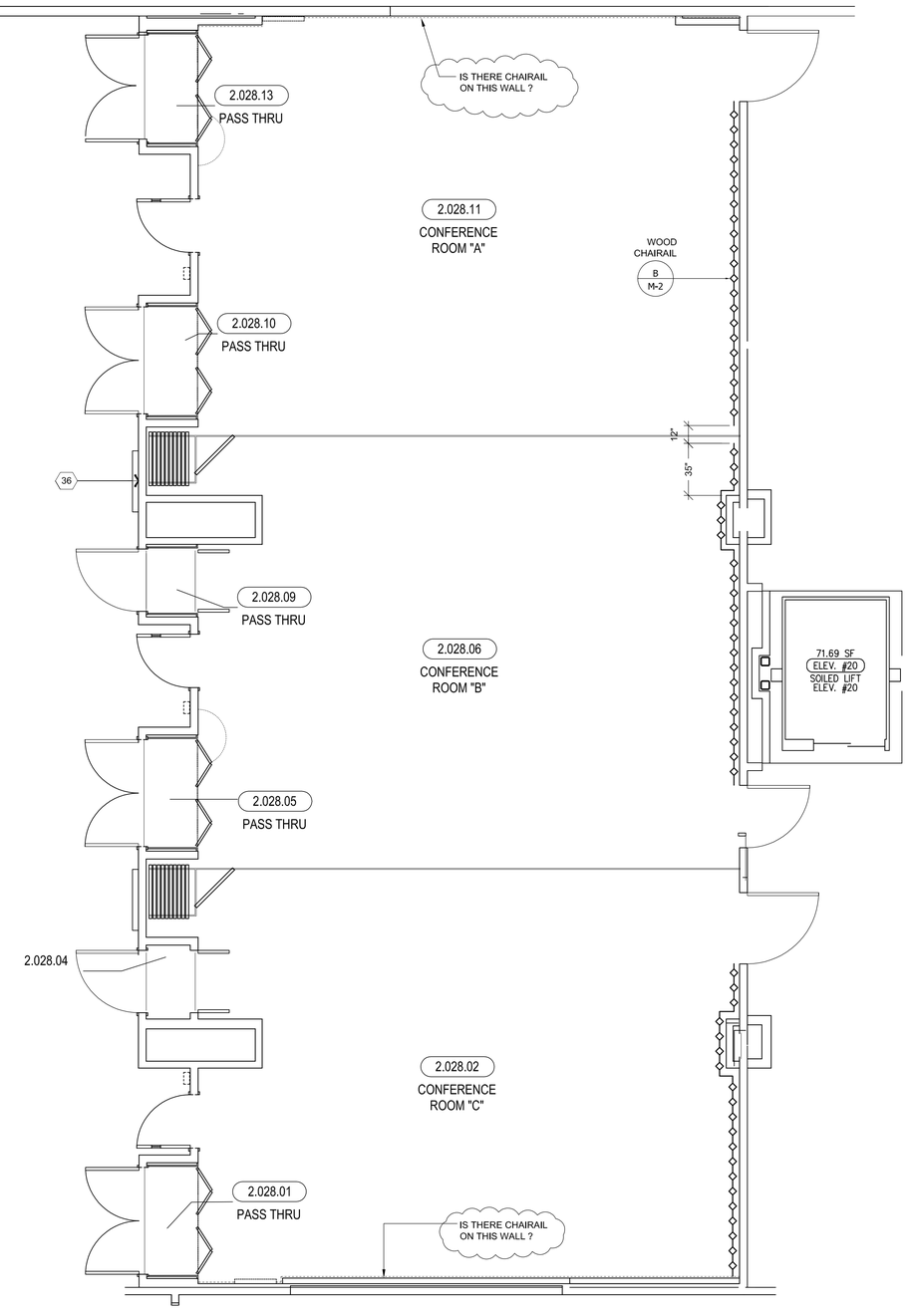

1 BASE & CHAIRAIL PLANS
SCALE: 1/4"=1'
ARCH. REF: A3.21

FINISH SCHEDULE
WOOD BASE & CHAIRAIL: P.S. CHERRY STAIN TO MATCH ARCH. SAMPLE

RELEASE FOR PRODUCTION
SIGNATURE: _____
DATE: _____
NOTE: NO CHANGES CAN BE MADE AFTER AUTHORIZATION TO PROCEED.

DATE	NO	REVISION	SUB. #	BY
-	/1	X	-	X
-	/2		-	
-	/3		-	
-	/4		-	
-	/5		-	
-	/6		-	

PROJECT :
CHOC HOSPITAL
TOWER II
455 S. MAIN STREET
ORANGE, CA. 92868

FLOOR : SECOND LEVEL
ROOM # : VARIES
ITEM : RUNNING TRIM
ITEM #: 2-160,2-161

CONTRACTOR :
McCARTHY

ARCHITECT :
FKP ARCHITECTS

COPYRIGHT
ALL IDEAS DESIGNS, ARRANGEMENTS AND PLANS INDICATED OR REPRESENTED BY THIS DRAWING ARE OWNED BY, AND THE PROPERTY OF P.A.M. AND WERE CREATED,EVOLVED AND DEVELOPED FOR USE ON, AND INTENDED FOR USE WITH THIS PROJECT. NONE OF SUCH IDEAS, DESIGNS, ARRANGEMENT OF PLANS SHALL BE USED BY OR DISCLOSED TO ANY PERSON, FIRM OR CORPORATION FOR ANY PURPOSE WHATSOEVER WITHOUT THE WRITTEN PERMISSION OF P.A.M.

FIELD VERIFICATION
P.A.M. SHOP DRAWINGS ARE MADE FOR THE EXCLUSIVE USE OF P.A.M. AND ANY OTHER TRADES USING THESE DRAWING USE THEM AT THERE OWN RISK. DIMENSIONS ON THESE DRAWINGS MAY NOT BE ALWAYS NOTED. FIELD CONDITIONS SHOULD ALWAYS TAKE PRECEDENCE. DIMENSIONS OF OTHER TRADES USING THESE DRAWINGS MUST TAKE THEIR OWN FIELD DIMENSIONS.

PACIFIC
ARCHITECTURAL MILLWORK
1041 ESUE ST. LA HABRA, CA. 90631
PH: (714) 526-2809 FAX: (714) 526-2873

DATE: 10-28-11
DRAWN BY: JB
SCALE: NOTED
JOB: 3635
SUBMITTAL: 28
DWG: M-1
SHEET(S):

P.S. CHERRY FIN. AW-1

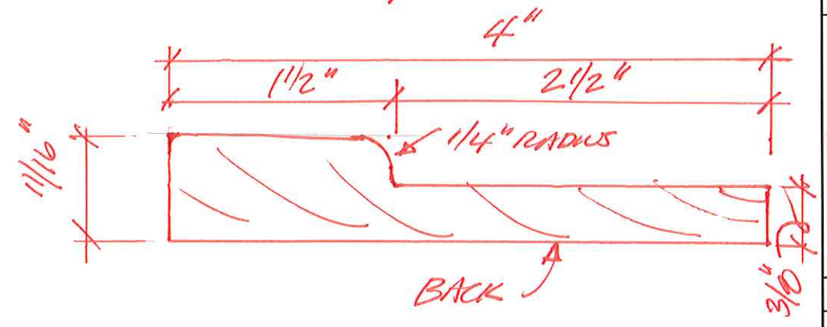

(2 -PCS. 9'-0" EACH)

(C) CONFERENCE
RM # 2.113.17 SOUTH ELEV.
@ MARKER TRAY ONLY

WOOD BASE / CHAIRAIL SCHEDULE			
ROOM	BASE	CHAIRAIL	DETAIL #
2.113.14	44 L.FT.		A/M-2
2.113.17	85 L.FT.	70 L.FT.	A/M-2,B/M-2
2.113.22	120 L.FT.	76 L.FT.	A/M-2,B/M-2
2.113.02,06,11		58 L.FT.	B/M-2
2.113.07	72 L.FT.		A/M-2
	321 L.FT. TOTAL	204 L.FT. TOTAL	

15% WASTE & MITER CUTS +48 = 369 LF

+31 = 235 LF

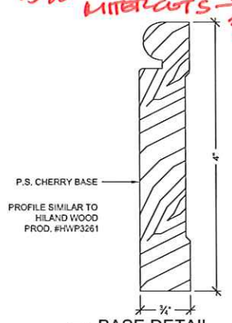

(A) BASE DETAIL
SCALE: FULL ITEM: 2-160
REF:NONE

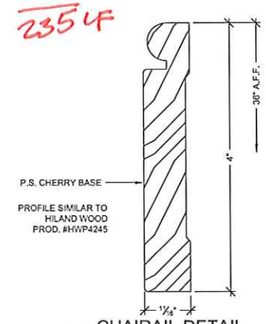

(B) CHAIRAIL DETAIL
SCALE: FULL ITEM: 2-161
REF:NONE

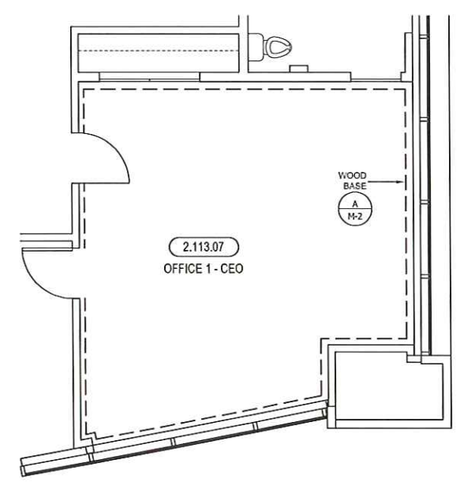

(2) BASE & CHAIRAIL PLAN
SCALE: 1/4"=1'
ARCH. REF: A3.21

RELEASE FOR PRODUCTION
SIGNATURE:
DATE:
NOTE: NO CHANGES CAN BE MADE AFTER AUTHORIZATION TO PROCEED.

DATE	NO	DESCRIPTION	SCALE	BY
-	1	-	-	X
-	2	-	-	-
-	3	-	-	-
-	4	-	-	-
-	5	-	-	-
-	6	-	-	-

PROJECT:
CHOC HOSPITAL
TOWER II
455 S. MAIN STREET
ORANGE, CA. 92868

FLOOR : SECOND LEVEL
ROOM # : VARIES
ITEM : RUNNING TRIM
ITEM #: 2-160,2-161

CONTRACTOR:
McCARTHY

ARCHITECT:
FKP ARCHITECTS

COPYRIGHT
ALL IDEAS, DESIGNS, ARRANGEMENTS AND PLANS INDICATED OR REPRESENTED BY THIS DRAWING ARE OWNED BY, AND THE PROPERTY OF PACIFIC ARCHITECTURAL MILLWORK. THEY WERE CREATED, EVALUATED AND DEVELOPED FOR USE HERE AND IN CONNECTION WITH THE SPECIFIED PROJECT. NONE OF SUCH IDEAS, DESIGNS, ARRANGEMENTS OF PLANS SHALL BE USED BY OR DISCLOSED TO ANY PERSON, FIRM OR CORPORATION FOR ANY PURPOSE WHATSOEVER WITHOUT THE WRITTEN PERMISSION OF P.A.M.

FIELD VERIFICATION
P.A.M. SHOP DRAWINGS ARE BASED FOR THE EXCLUSIVE USE OF P.A.M. AND ANY OTHER TRADES USING THESE DRAWINGS USE THEM AT THEIR OWN RISK. DIMENSIONS SHOWN ON THESE DRAWINGS ARE BASED ON FIELD ESTIMATIONS AND REQUIRE CHANGES IN DIMENSIONS. SO OTHER TRADES USING THESE DRAWINGS MUST TAKE THEIR OWN FIELD DIMENSIONS.

PACIFIC
ARCHITECTURAL MILLWORK
1545 E. 16TH ST. ALAMEDA, CA 94501
PH: (714) 525-2099 FAX: (714) 525-2673

DATE: 10-28-11
DRAWN BY: JB
SCALE: NOTED
JOB: 3635
SUBMITTAL: 28
DWG: M-2
SHEET(S):

HARDWARE SCHEDULE

	ITEM	PART NO.	MANUF.	FINISH / COLOR
1	CLOSET POLE	770 5	KV	CHROME
2	POLE FLANGES	764	KV	CHROME
3	DOOR SPRING HINGES	2181C	SOSS	SATIN CHROME
4				
5				
6				
7				
8				
9				
10				
11				

FINISH SCHEDULE

AW 1 - VENEER/SOLID - (WALL PANELS ON FR-MDF CORE/BASE)
P.S. CHERRY (BOOKMATCHED) TO MATCH ARCH. SAMPLE

PL 21 - PLASTIC LAMINATE - (SHELF)
WILSONART 7936K-07 WILLIAMSBURG CHERRY TEXTURED GLOSS

WHITE MELAMINE INTERIORS U.N.O.

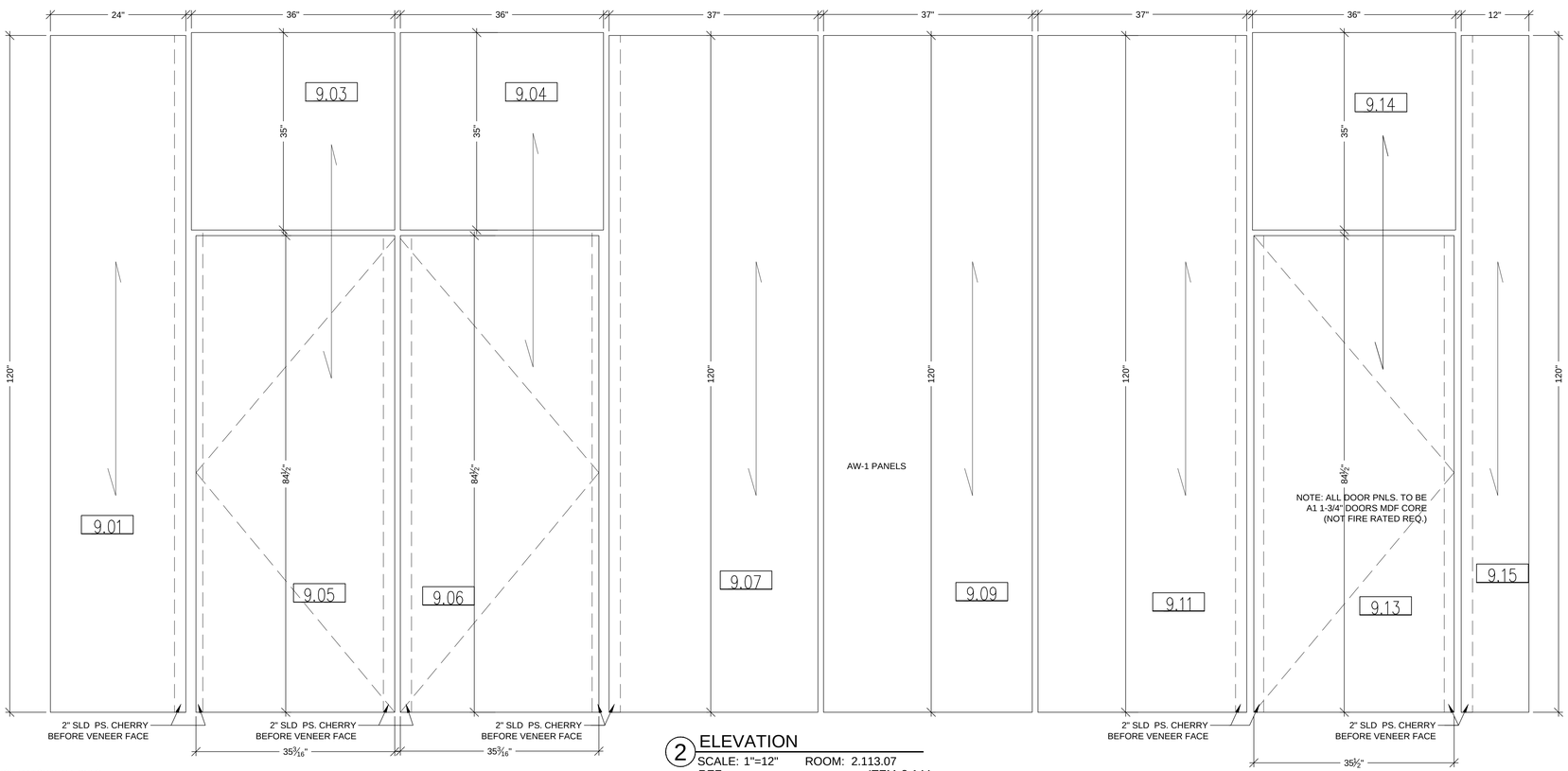

SEQUENCE MATCH WALL PNLS.
A3-PS CHERRY BOOK MATCH
ON ¾" FIRE RATED MDF CORE

NOTE: ALL DOOR PNLS. TO BE
A1 1-3/4" DOORS

NOTE: ALL DOOR PNLS. TO BE
A1 1-3/4" DOORS MDF CORE
(NOT FIRE RATED REQ.)
35 3/16" X 84 ½" FINISH DOORS

NOTE: ALL DOOR PNLS. TO BE
A1 1-3/4" DOORS MDF CORE
(NOT FIRE RATED REQ.)
35 ½" X 84 ½" FINISH DOORS

2 ELEVATION

SCALE: 1"=12" ROOM: 2.113.07
REF:- ITEM: 2-144

NO	DATE	REVISION	SHEET #	BY
1	2-13-12	PER R.L.C. DATED 12-19-11		JB
2				
3				
4				
5				
	3-29-12	PER F.D.		JJA

PROJECT : CHOC HOSPITAL TOWER II
455 S. MAIN STREET
ORANGE, CA. 92868

FLOOR : SECOND LEVEL
ROOM # : 2.113.07
ITEM : WALL PANELS
REF:-
ITEM # : 2-144,2-145

ARCHITECT: FKP ARCHITECTS
CONTRACTOR: McCARTHY

COPYRIGHT
ALL IDEAS DESIGNS, ARRANGEMENTS AND PLANS INDICATED OR REPRESENTED BY THIS DRAWING ARE OWNED BY, AND THE PROPERTY OF P.A.M. AND WERE CREATED,EVOLVED AND DEVELOPED FOR USE ON, AND FOR PUBLICATION BY, P.A.M. EXCEPT BY AGREEMENT NONE OF SUCH IDEAS, DESIGNS, ARRANGEMENT OF PLANS SHALL BE USED BY OR DISCLOSED TO ANY PERSON, FIRM OR CORPORATION FOR ANY PURPOSE WHATSOEVER WITHOUT THE WRITTEN PERMISSION OF P.A.M..

FIELD VERIFICATION
P.A.M. SHOP DRAWINGS ARE MADE FOR THE EXCLUSIVE USE OF P.A.M. AND ANY OTHER TRADES USING THESE DRAWING USE THEM AT THERE OWN RISK. DIMENSIONS SHOWN ON THESE DRAWINGS ARE NOT VERIFIED. FIELD CONDITIONS MAY REQUIRE CHANGES IN DIMENSIONS, SO OTHER TRADES USING THESE DRAWINGS MUST TAKE THEIR OWN FIELD DIMENSIONS.

PACIFIC ARCHITECTURAL MILLWORK
1041 LESLIE ST. LA HABRA, CA. 90631
PH: (714) 525-2059 FAX: (714) 525-2673

DATE: 3-29-12
DRAWN BY: JJA SCALE: NOTED
JOB: 3635 SUBMITTAL: 28
DWG: 2.45TALB
SHEET(S): J07

RELEASE FOR PRODUCTION
SIGNATURE: _____
DATE: _____
NOTE: NO CHANGES CAN BE MADE AFTER AUTHORIZATION TO PROCEED.

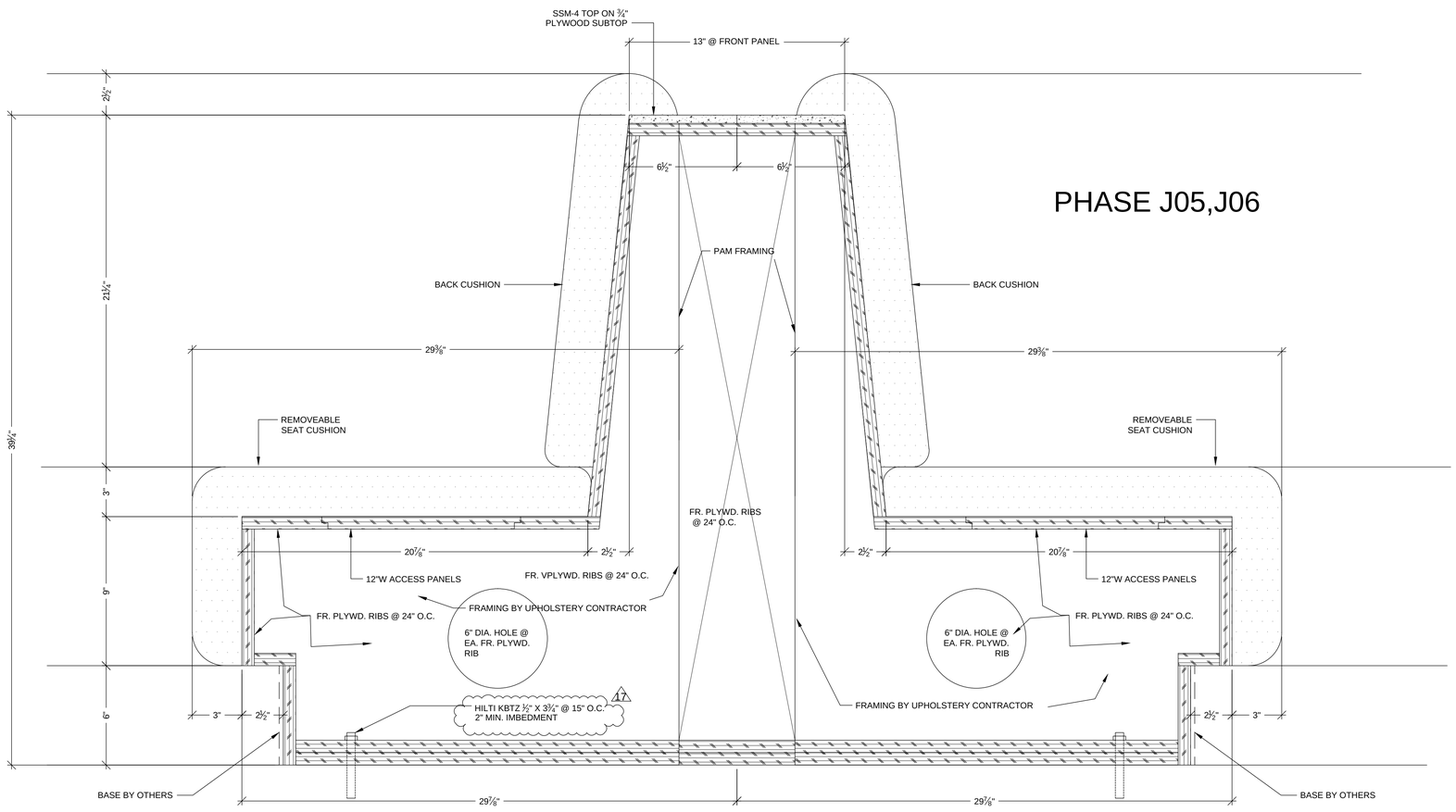

13 (E) VERTICAL SECTION
SCALE: 3"=1'-0"

MCCARTHY APPROVAL

A. Approved as noted for Architectural Review ☐

B. Review and Resubmit ☐

C. Rejected ☐

This review is for general conformance with Plans and Specifications only. Any deviations from same not clearly noted by the Preparer have not been reviewed. Review shall not constitute a complete check of detailed dimensions or count to serve to relieve the Preparer of contractual responsibility for any error or deviation from contract requirements.

McCarthy

By _____Date_____ _____

SHOP DRAWING REFERENCE NO. _____

DATE	NO	REVISION	SUB #	BY
5-4-11	13	PER A.S.I. #58 DATED 2-4-11	25	JB
2-29-12	–	FIELD DIMENSIONS	–	MW
–	3	–	–	
–	4	–	–	
–	5	–	–	
–	6	–	–	
3-27-2012	–	J05,J06 RELEASED TO SHOP PER APPROVED DRAWINGS & FD	–	JJA

PROJECT :
CHOC HOSPITAL
TOWER II
455 S. MAIN STREET
ORANGE, CALIFORNIA 92868

FLOOR : SECOND FLOOR
ROOM # : 2.041.00.A, PUBLIC DINING SEATING AREA
ITEM : 2-130
REF : A3/IA7.1

CONTRACTOR :
McCARTHY

ARCHITECT :
FKP

COPYRIGHT
ALL DEAS DESIGNS, ARRANGEMENTS AND PLANS INDICATED OR REPRESENTED BY THIS DRAWING ARE OWNED BY, AND THE PROPERTY OF P.A.M. AND WERE CREATED,EVOLVED AND DEVELOPED FOR USE ON, AND IN CONNECTION WITH THE SPECIFIED PROJECT NONE OF SUCH IDEAS, DESIGNS, ARRANGEMENT OF PLANS SHALL BE USED OR DISCLOSED TO ANY PERSON, FIRM OR CORPORATION FOR ANY PURPOSE WHATSOEVER WITHOUT THE WRITTEN PERMISSION OF P.A.M.

FIELD VERIFICATION
P.A.M. SHOP DRAWINGS ARE MADE FOR THE EXCLUSIVE USE OF P.A.M. AND ANY OTHER TRADES USING THESE DRAWING USE THEM AT THERE OWN RISK. DIMENSIONS ON THESE DRAWINGS MAY NOT BE ALWAYS NOTED. FIELD CONDITIONS MAY REQUIRE CHANGES IN DIMENSIONS. SO OTHER TRADES USING THESE DRAWINGS MUST TAKE THEIR OWN FIELD DIMENSIONS.

PACIFIC ARCHITECTURAL MILLWORK
1041 LESLIE ST. LA HABRA, CA. 90631
PH: (714) 525-2069 FAX: (714) 525-2673

DATE: 5-12-11
DRAWN BY: JB
SCALE: NOTED
JOB: 3635
SUBMITTAL: 25
DWG: 2-34.4
J05J06

RELEASE FOR PRODUCTION
SIGNATURE: _____
DATE: _____
NOTE: NO CHANGES CAN BE MADE AFTER AUTHORIZATION TO PROCEED.

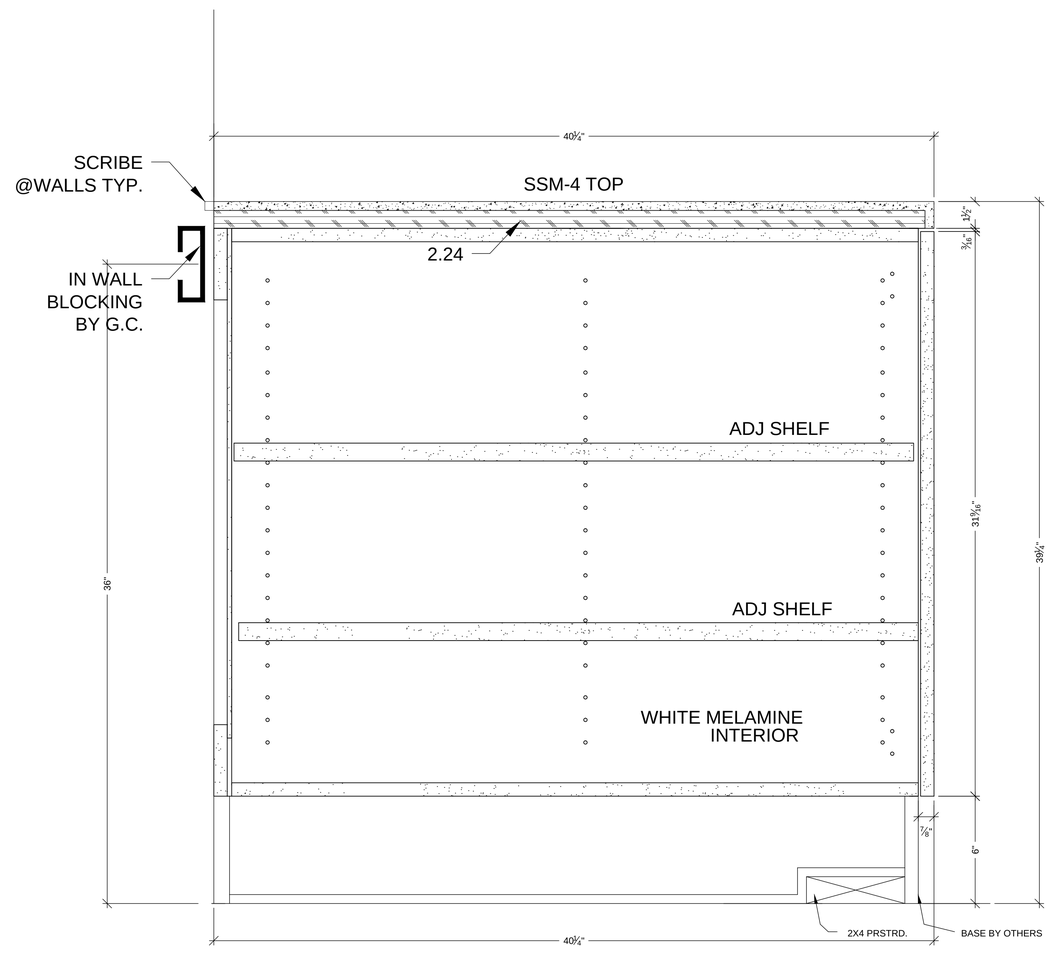

13 B VERTICAL SECTION
SCALE: 3"=1'-0"

MCCARTHY APPROVAL

A. Approved as noted for Architectural Review ☐

B. Review and Resubmit ☐

C. Rejected ☐

This review is for general conformance with Plans and Specifications only. Any deviations from same not clearly noted by the Preparer have not been reviewed. Review shall not constitute a complete check of detailed dimensions or count to serve to relieve the Preparer of contractual responsibility for any error or deviation from contract requirements.

McCarthy

By _____ Date _____ _____

SHOP DRAWING REFERENCE NO. _____

NO	DATE	REVISION	SUB #	BY
13	5-4-11	PER A.S.I. #58 DATED 2-4-11	25	JB
	2-29-12	FIELD DIMENSIONS	"	MW
2	"	"	"	
4	"	"	"	
5	"	"	"	
6	"	"	"	

PROJECT : CHOC HOSPITAL TOWER II
455 S. MAIN STREET
ORANGE, CALIFORNIA 92868

FLOOR : SECOND FLOOR
ROOM # : 2.041.00.A, PUBLIC DINING SEATING AREA
ITEM : 2-130
REF : A3/A7.1

ARCHITECT : FKP

CONTRACTOR : McCARTHY

COPYRIGHT
ALL IDEAS DESIGNS, ARRANGEMENTS AND PLANS INDICATED OR REPRESENTED BY THIS DRAWING ARE OWNED BY, AND THE PROPERTY OF P.A.M. AND WERE CREATED,EVOLVED AND DEVELOPED FOR USE ON, AND IN CONECTION WITH THE SPECIFIED PROJECT. NONE OF SUCH IDEAS, DESIGNS, ARRANGEMENT OF PLANS SHALL BE USED BY OR DISCLOSED TO ANY PERSON FOR ANY PURPOSE OTHER THAN THE PURPOSE WHATSOEVER WITHOUT THE WRITTEN PERMISSION OF P.A.M.

FIELD VERIFICATION
P.A.M. SHOP DRAWINGS ARE MADE FOR THE EXCLUSIVE USE OF P.A.M. AND ANY OTHER TRADES USING THESE DRAWING USE THEM AT THERE OWN RISK. DIMENSIONS ON THESE DRAWINGS MAY NOT BE ALWAYS NOTED, FIELD CONDITIONS MAY REQUIRE CHANGES IN DIMENSIONS, SO OTHER TRADES USING THESE DRAWINGS MUST TAKE THEIR OWN FIELD DIMENSIONS.

PACIFIC ARCHITECTURAL MILLWORK
1041 LESLIE ST LA HABRA, CA. 90631
PH: (714) 525-2059 FAX: (714) 525-2673

DATE: 05-10-10
DRAWN BY: JND
SCALE: NOTED
JOB: 3635
SUBMITTAL: 06
DWG: 2-34.2

RELEASE FOR PRODUCTION
SIGNATURE: _____
DATE: _____
NOTE: NO CHANGES CAN BE MADE AFTER AUTHORIZATION TO PROCEED.

PHASE J05,J06

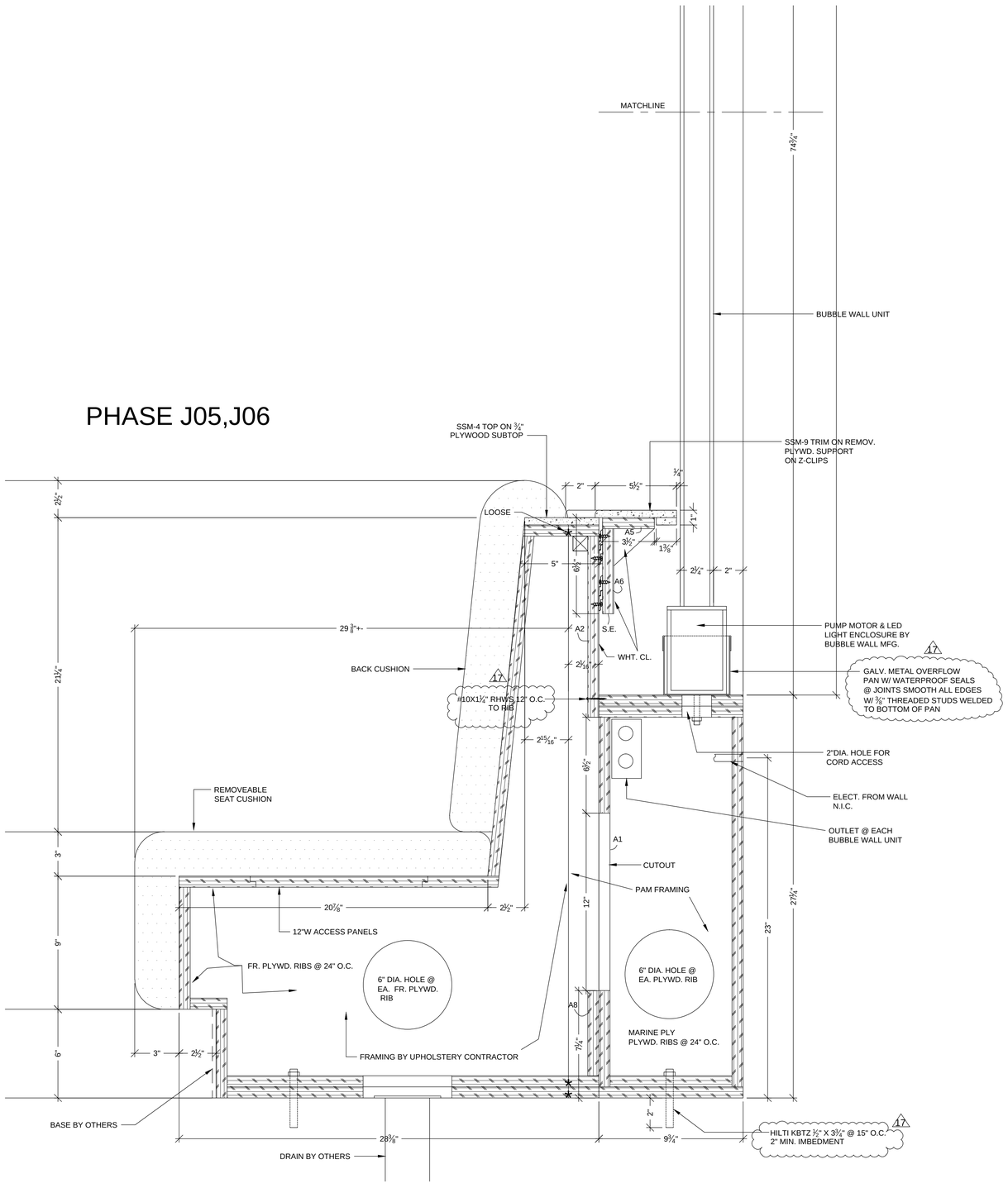

13 A VERTICAL SECTION
SCALE: 3"=1'-0"

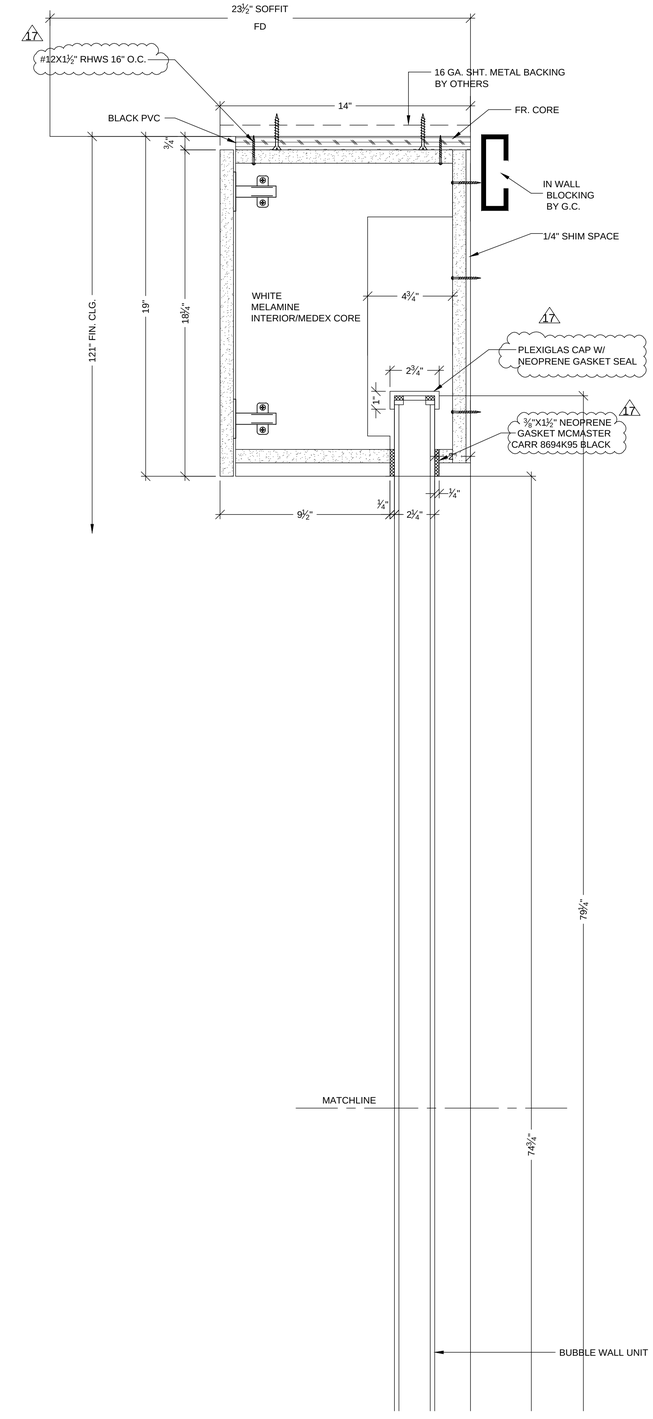

13 A VERTICAL SECTION
SCALE: 3"=1'-0"

MCCARTHY APPROVAL

A. Approved as noted for Architectural Review ☐

B. Review and Resubmit ☐

C. Rejected ☐

This review is for general conformance with Plans and Specifications only. Any deviations from same not clearly noted by the Preparer have not been reviewed. Review shall not constitute a complete check of detailed dimensions or count to serve to relieve the Preparer of contractual responsibility for any error or deviation from contract requirements.

McCarthy

By _____ Date _____

SHOP DRAWING REFERENCE NO. _____

DATE	NO	REVISION	SHEET #	BY
5-4-11	13	PER A.S.I. #58 DATED 2-4-11	25	JB
2-29-12	3	FIELD DIMENSIONS	–	MW
–	4	–	–	
–	5	–	–	
–	6	–	–	
3-27-2012	–	J05,J06 RELEASED TO SHOP PER APPROVED DRAWINGS & FD	–	JJA

PROJECT : CHOC HOSPITAL TOWER II
455 S. MAIN STREET ORANGE, CALIFORNIA 92868

FLOOR : SECOND FLOOR
ROOM # : 2.041.00.A, PUBLIC DINING SEATING AREA
ITEM : 2-130
REF : A3/A7.1

CONTRACTOR : McCARTHY

ARCHITECT : FKP

COPYRIGHT
ALL IDEAS DESIGNS, ARRANGEMENTS AND PLANS INDICATED OR REPRESENTED BY THIS DRAWING ARE OWNED BY, AND THE PROPERTY OF P.A.M. AND WERE CREATED,EVOLVED AND DEVELOPED FOR USE ON, AND IN CONECTION WITH THE SPECIFIED PROJECT. NONE OF SUCH IDEAS, DESIGNS, ARRANGEMENT OF PLANS SHALL BE USED BY OR DISCLOSED TO ANY PERSON OR ENTITY FOR ANY OTHER PURPOSE WHATSOEVER WITHOUT THE WRITTEN PERMISSION OF P.A.M.

FIELD VERIFICATION
P.A.M. SHOP DRAWINGS ARE MADE FOR THE EXCLUSIVE USE OF P.A.M. AND ANY OTHER TRADES USING THESE DRAWING USE THEM AT THERE OWN RISK. DIMENSIONS ON THESE DRAWINGS MAY NOT BE ALWAYS NOTED, FIELD CONDITIONS MAY REQUIRE CHANGES IN DIMENSIONS, SO OTHER TRADES USING THESE DRAWINGS MUST TAKE THEIR OWN FIELD DIMENSIONS.

PACIFIC ARCHITECTURAL MILLWORK
1041 LESLIE ST. LA HABRA, CA. 90631
PH: (714) 525-2059 FAX: (714) 525-2673

DATE: 05-10-10
DRAWN BY: JND SCALE: NOTED
JOB: 3635 SUBMITTAL: 06
DWG: 2-34.1
J05J06

RELEASE FOR PRODUCTION
SIGNATURE: _____
DATE: _____
NOTE: NO CHANGES CAN BE MADE AFTER AUTHORIZATION TO PROCEED.

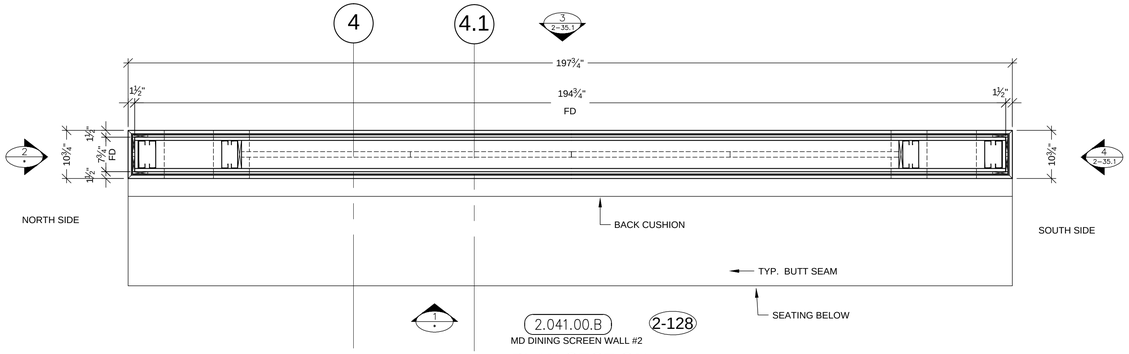

B PLAN SECTION
SCALE: 3/4"=1'-0"
ARCH. REF: NONE

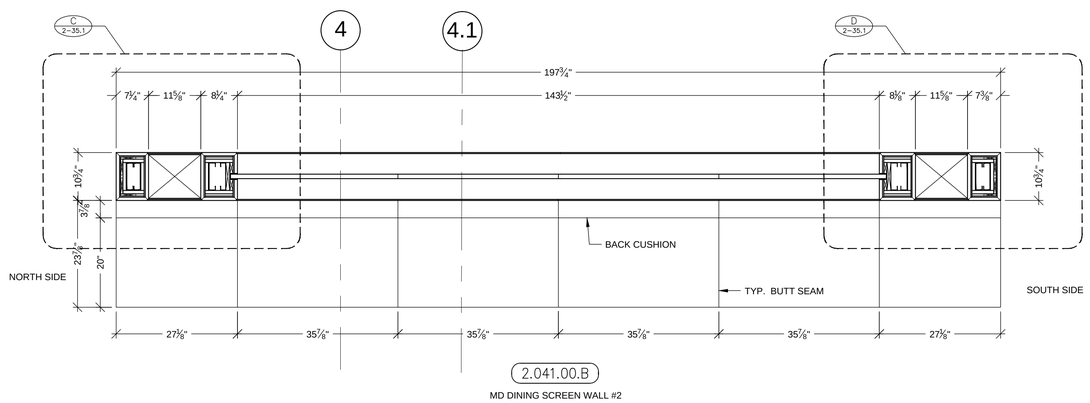

A PLAN SECTION
SCALE: 3/4"=1'-0"
ARCH. REF: NONE

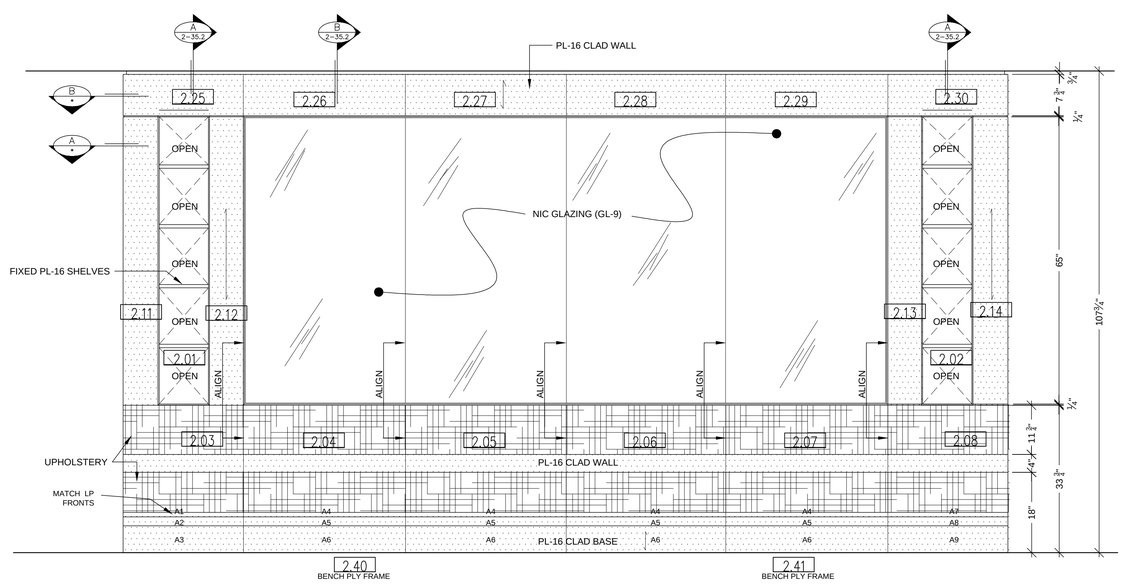

1 ELEVATION
SCALE: 3/4"=1'-0" ITEM: 2-128
ROOM: MD DINING SCREEN WALL #2
ARCH. REF: C5/IA8.5

PHASE J09

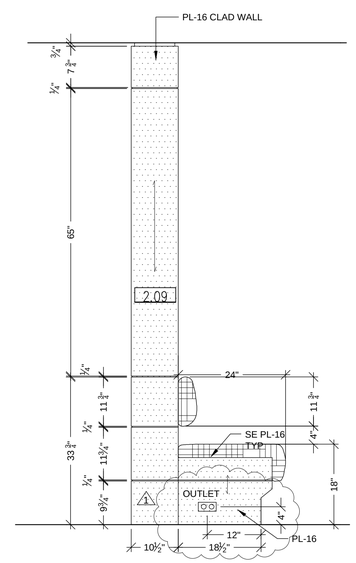

2 ELEVATION
SCALE: 3/4"=1'-0" ITEM: 2-128
ROOM: MD DINING SCREEN WALL #2
ARCH. REF: NONE

FINISH SCHEDULE

PL16 - PLASTIC LAMINATE - (SCREEN WALL)
LAMINART #953, RENAISSANCE, CHERRY (FLAT CUT, BOOK MATCHED, SATIN)

SEAT UPHOLSTERY: MAHARAM PATTERN LARIAT 440401
COLOR: 010 TAUPE
BACK UPHOLSTERY: CARNEGIE PATTERN BAUBLE 6104
COLOR: 40

MCCARTHY APPROVAL

A. Approved as noted for Architectural Review ☐
B. Review and Resubmit ☐
C. Rejected ☐

This review is for general conformance with Plans and Specifications only. Any deviations from same not clearly noted by the Preparer have not been reviewed. Review shall not constitute a complete check of detailed dimensions or count to serve to relieve the Preparer of contractual responsibility for any error or deviation from contract requirements.

McCarthy

By _____ Date _____ _____
SHOP DRAWING REFERENCE NO. _____

RELEASE FOR PRODUCTION

SIGNATURE: _____
DATE: _____

NOTE: NO CHANGES CAN BE MADE AFTER AUTHORIZATION TO PROCEED.

DATE	NO	REVISION	SUB. #	BY
8-14-10	1	PER RFI #17/05-0 DATED 7-01-10	–	JB
–	2		–	
–	3		–	
–	4		–	
–	5		–	
2-29-12		FIELD DIMENSIONS	–	MW
4-19-2012		J09 RELEASED TO SHOP PER APPROVED DRAWINGS & FD	–	JJA

PROJECT :
CHOC HOSPITAL
TOWER II
455 S. MAIN STREET
ORANGE, CA. 92868

FLOOR : SECOND FLOOR
ROOM # : 2.041.00.B, MD DINING SCREEN WALL #2
ITEM : 2-128
REF : C5/IA8.5

CONTRACTOR :
McCARTHY

ARCHITECT :
FKP ARCHITECTS

COPYRIGHT
ALL IDEAS DESIGNS, ARRANGEMENTS AND PLANS INDICATED OR REPRESENTED BY THIS DRAWING ARE OWNED BY, AND THE PROPERTY OF P.A.M. AND WERE CREATED/EVOLVED AND DEVELOPED FOR USE ON, AND IN CONNECTION WITH, THE SPECIFIED PROJECT. NONE OF THESE IDEAS, DESIGNS, ARRANGEMENT OF PLANS SHALL BE USED BY OR DISCLOSED TO ANY PERSON, FIRM OR CORPORATION FOR ANY PURPOSE WHATSOEVER WITHOUT THE WRITTEN PERMISSION OF P.A.M.

FIELD VERIFICATION
P.A.M. SHOP DRAWINGS ARE MADE FOR THE EXCLUSIVE USE OF P.A.M. AND ANY OTHER TRADES USING THESE DRAWING USE THEM AT THERE OWN RISK. DIMENSIONS ON THESE DRAWINGS MAY NOT BE ALWAYS NOTIED. FIELD CONDITIONS MAY REQUIRE CHANGES IN DIMENSIONS. ALL TRADES USING THESE DRAWINGS MUST TAKE THEIR OWN FIELD DIMENSIONS.

PACIFIC ARCHITECTURAL MILLWORK
1041 LESLIE ST. LA HABRA, CA. 90631
PH: (714) 525-2059 FAX: (714) 525-2673

DATE: 05-10-10
DRAWN BY: JND SCALE: NOTED
JOB: 3635 SUBMITTAL: 06
DWG: 2-35
J09 SHEET(S):

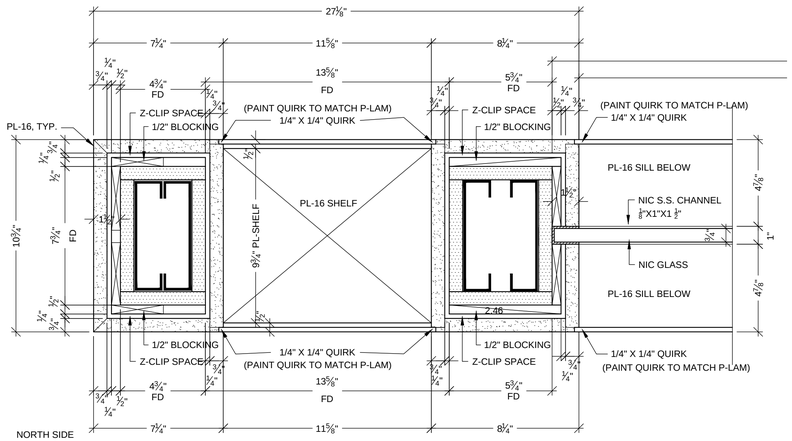

C DETAIL
SCALE: 3"=1'-0"

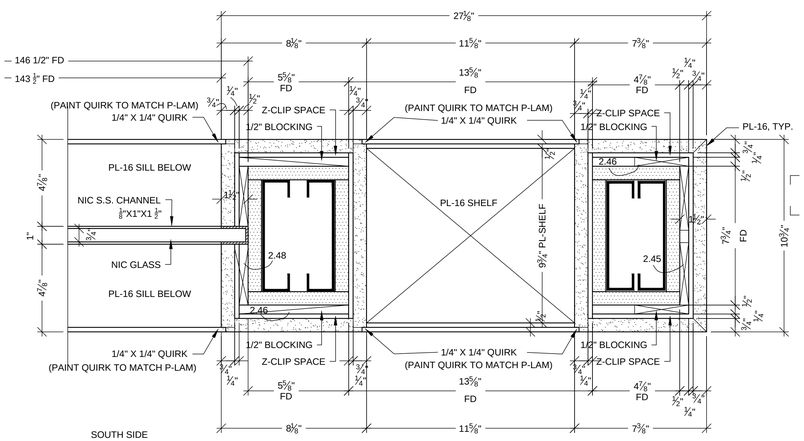

D DETAIL
SCALE: 3"=1'-0"

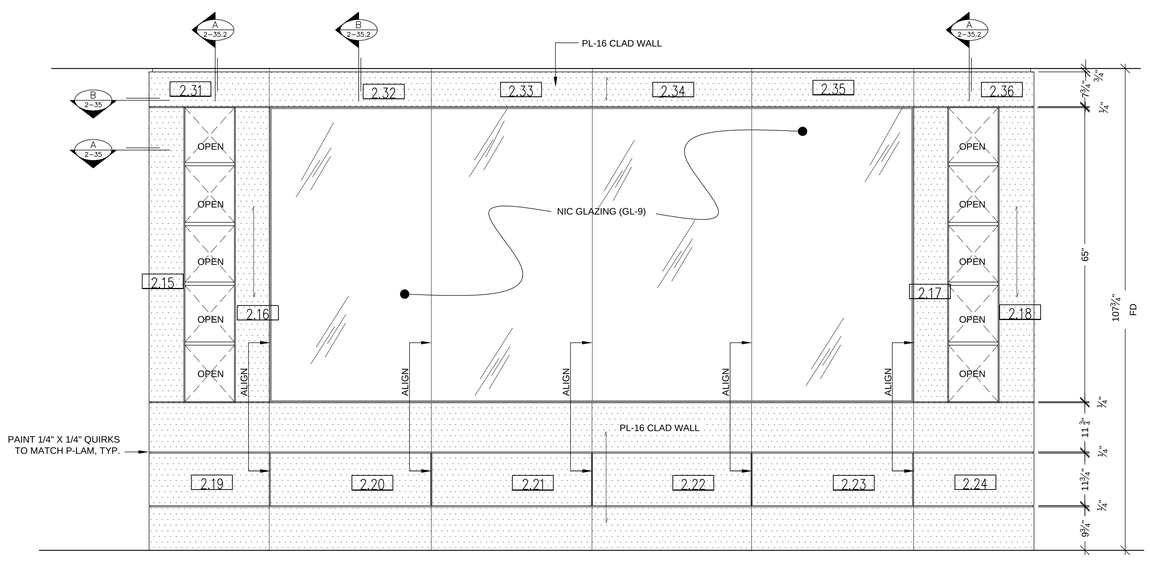

PHASE J09

3 ELEVATION
SCALE: 3/4"=1'-0" ITEM: 2-128
ROOM: MD DINING SCREEN WALL #2
ARCH. REF: B5/IA8.5

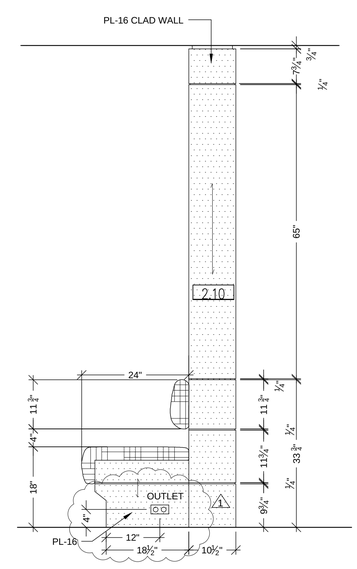

4 ELEVATION
SCALE: 3/4"=1'-0" ITEM: 2-128
ROOM: MD DINING SCREEN WALL #2
ARCH. REF: NONE

MCCARTHY APPROVAL

A. Approved as noted for Architectural Review ☐

B. Review and Resubmit ☐

C. Rejected ☐

This review is for general conformance with Plans and Specifications only. Any deviations from same not clearly noted by the Preparer have not been reviewed. Review shall not constitute a complete check of detailed dimensions or count to serve to relieve the Preparer of contractual responsibility for any error or deviation from contract requirements.

McCarthy

By _____ Date _____

SHOP DRAWING REFERENCE NO. _____

RELEASE FOR PRODUCTION

SIGNATURE: _____

DATE: _____

NOTE: NO CHANGES CAN BE MADE AFTER AUTHORIZATION TO PROCEED.

DATE	NO	REVISION	SUB #	BY
8-14-10	1	PER RFI #1765-0 DATED 7-01-10	–	JB
–	2		–	
–	3		–	
–	4		–	
–	5		–	
2-29-12		FIELD DIMENSIONS	–	MW
4-19-2012		J09 RELEASED TO SHOP PER APPROVED DRAWINGS & FD	–	JJA

PROJECT :
CHOC HOSPITAL
TOWER II
455 S. MAIN STREET
ORANGE, CA. 92868

FLOOR : SECOND FLOOR
ROOM # : 2.041.00.B, MD DINING SCREEN WALL #2
ITEM : 2-128
REF : B5/IA8.5

CONTRACTOR :
McCARTHY

ARCHITECT :
FKP ARCHITECTS

COPYRIGHT
ALL IDEAS DESIGNS, ARRANGEMENTS AND PLANS INDICATED OR REPRESENTED BY THIS DRAWING ARE OWNED BY, AND THE PROPERTY OF P.A.M. AND WERE CREATED,EVOLVED AND DEVELOPED FOR USE ON, AND IN CONNECTION WITH THE SPECIFIED PROJECT. NONE OF SUCH IDEAS, DESIGNS, ARRANGEMENT OF PLANS SHALL BE USED BY OR DISCLOSED TO ANY PERSON, FIRM OR CORPORATION FOR ANY PURPOSE WHATSOEVER WITHOUT THE WRITTEN PERMISSION OF P.A.M.

FIELD VERIFICATION

P.A.M. SHOP DRAWINGS ARE MADE FOR THE EXCLUSIVE USE OF P.A.M. AND ANY OTHER TRADES USING THESE DRAWING USE THEM AT THERE OWN RISK. DIMENSIONS ON THESE DRAWINGS MAY NOT BE ALWAYS NOTED. FIELD CONDITIONS MAY REQUIRE CHANGES IN DIMENSIONS. SO OTHER TRADES USING THESE DRAWINGS MUST TAKE THEIR OWN FIELD DIMENSIONS.

PACIFIC ARCHITECTURAL MILLWORK
1041 LESLIE ST. LA HABRA, CA. 90631
PH: (714) 525-2069 FAX: (714) 525-2073

DATE: 05-10-10	
DRAWN BY: JND	SCALE: NOTED
JOB: 3635	SUBMITTAL: 06
DWG: 2-35.1	
J09	SHEET(S):

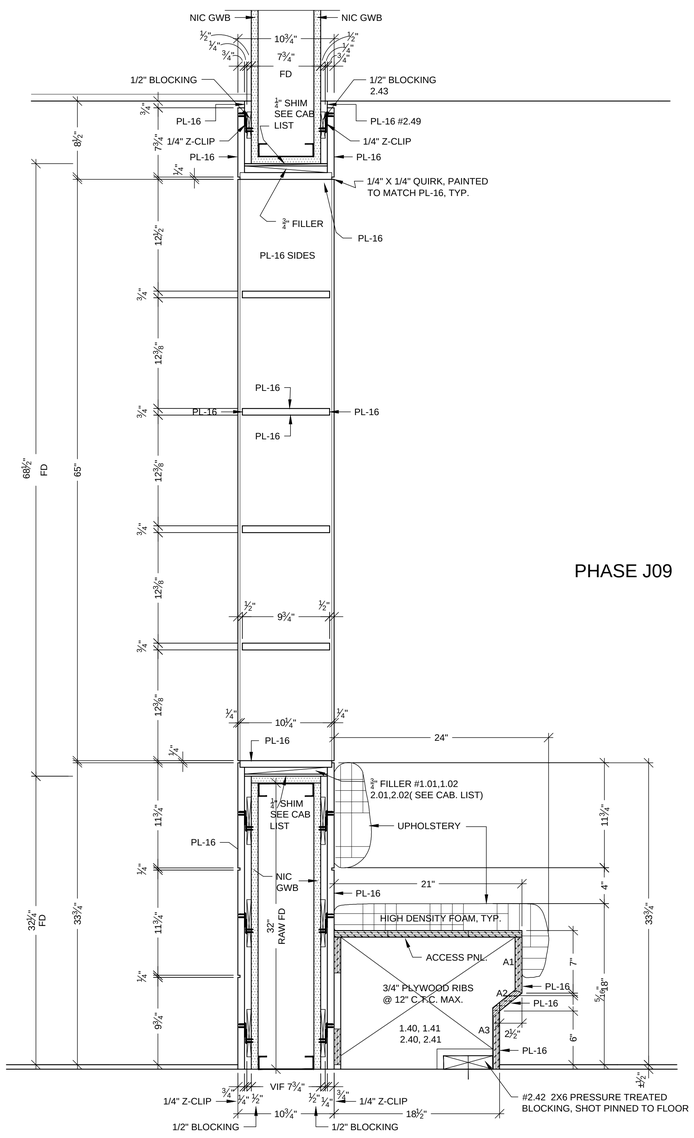

PHASE J09

A VERTICAL SECTION
SCALE: 1 1/2"=1'-0"
ARCH. REF.: A4/IA7.1 (SIM.)

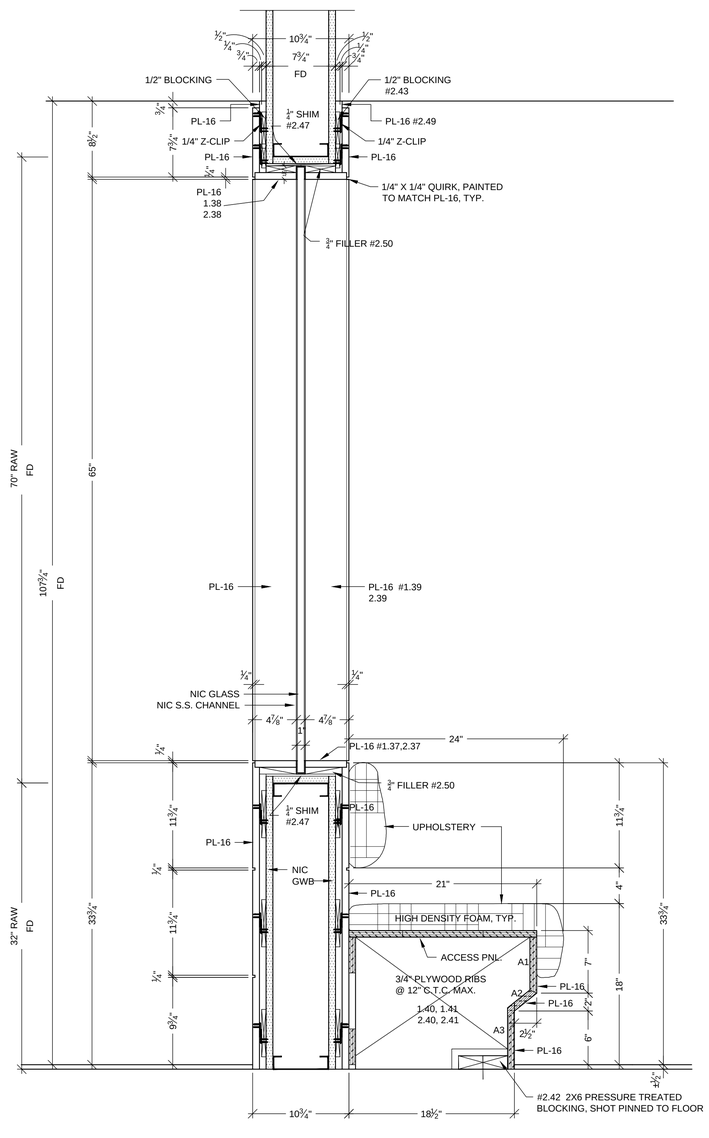

B VERTICAL SECTION
SCALE: 1 1/2"=1'-0"
ARCH. REF.: A4/IA7.1 (SIM.)

MCCARTHY APPROVAL

A. Approved as noted for Architectural Review ☐
B. Review and Resubmit ☐
C. Rejected ☐

This review is for general conformance with Plans and Specifications only. Any deviations from same not clearly noted by the Preparer have not been reviewed. Review shall not constitute a complete check of detailed dimensions or count to serve to relieve the Preparer of contractual responsibility for any error or deviation from contract requirements.

McCarthy

By _____ Date _____

SHOP DRAWING REFERENCE NO. _____

RELEASE FOR PRODUCTION
SIGNATURE: _____
DATE: _____
NOTE: NO CHANGES CAN BE MADE AFTER AUTHORIZATION TO PROCEED.

DATE	NO	REVISION	SUB #	BY
	1			
	2			
	3			
	4			
	5			
2-29-12		FIELD DIMENSIONS		MW
4-19-2012		J09 RELEASED TO SHOP PER APPROVED DRAWINGS & FD		JJA

PROJECT :
CHOC HOSPITAL
TOWER II
455 S. MAIN STREET
ORANGE, CA. 92868

FLOOR : SECOND FLOOR
ROOM # : 2.041.00.B, MD DINING SCREEN WALL #2
ITEM : 2-128
REF. : A4/IA7.1

CONTRACTOR : McCARTHY

ARCHITECT : FKP ARCHITECTS

COPYRIGHT
ALL IDEAS,DESIGNS, ARRANGEMENTS AND PLANS INDICATED OR REPRESENTED BY THIS DRAWING ARE OWNED BY, AND THE PROPERTY OF P.A.M. AND WERE CREATED,EVOLVED AND DEVELOPED FOR USE ON, AND IN CONECTION WITH THE SPECIFIED PROJECT. NONE OF SUCH IDEAS, DESIGNS, ARRANGEMENT OF PLANS SHALL BE USED BY OR DISCLOSED TO ANY PERSON, FIRM OR CORPORATION FOR ANY PURPOSE WHATSOEVER WITHOUT THE WRITTEN PERMISSION OF P.A.M.

FIELD VERIFICATION
P.A.M. SHOP DRAWINGS ARE MADE FOR THE EXCLUSIVE USE OF P.A.M. AND ANY OTHER TRADES USING THESE DRAWING USE THEM AT THERE OWN RISK. DIMENSIONS ON THESE DRAWINGS MAY NOT BE ALWAYS NOTED. FIELD CONDITIONS MAY REQUIRE CHANGES IN DIMENSIONS, SO OTHER TRADES USING THESE DRAWINGS MUST TAKE THEIR OWN FIELD DIMENSIONS.

PACIFIC
ARCHITECTURAL MILLWORK
1041 LESLIE ST. LA HABRA, CA. 90631
PH: (714) 525-2059 FAX: (714) 525-2673

DATE: 05-10-10	
DRAWN BY: JND	SCALE: NOTED
JOB: 3635	SUBMITTAL: 06
DWG: 2-35.2	
J09	SHEET(S):

FINISH SCHEDULE

PL 16	- PLASTIC LAMINATE - (CABINET) LAMINART #953, RENAISSANCE, CHERRY (FLAT CUT, BOOK MATCHED, SATIN)
SSM 1	- SOLID SURFACE - (TOP) AVONITE WHITE SANDS K1 6636 SATIN

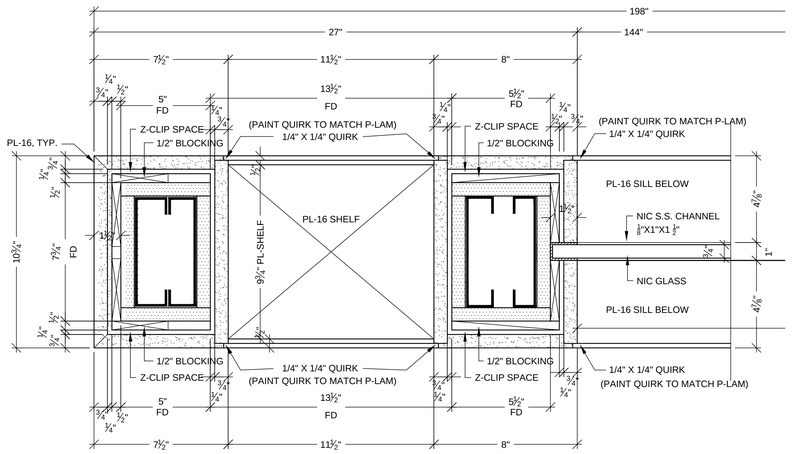

C DETAIL
SCALE: 3"=1'-0"

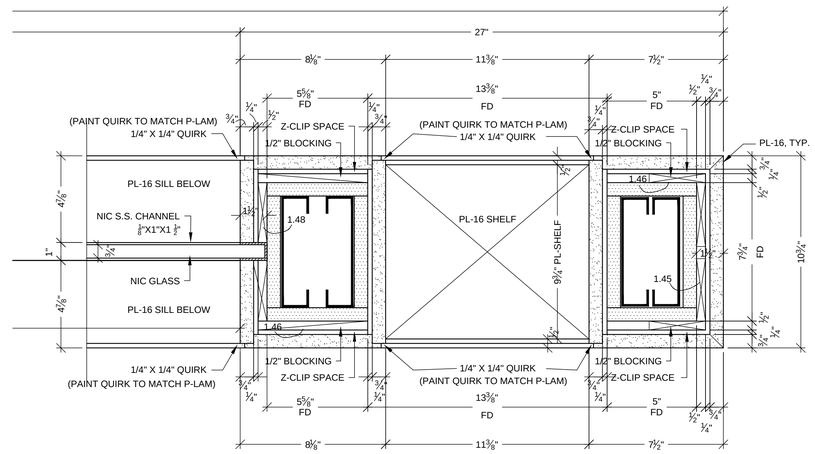

D DETAIL
SCALE: 3"=1'-0"

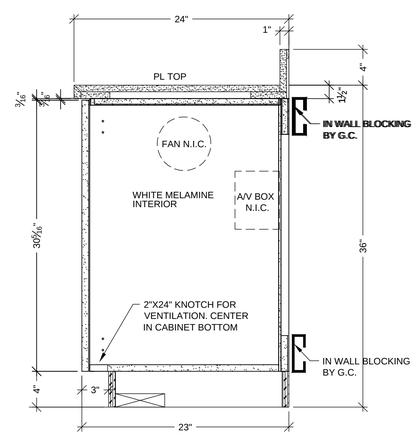

A VERTICAL SECTION
SCALE: 1 1/2" = 1'- 0"

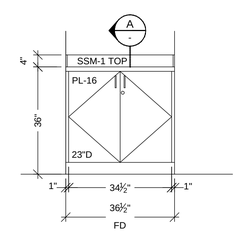

2 ELEVATION
SCALE: 1/2"=1'-0" ITEM: 2-135
ROOM: MD DINING 2.041.00.B
ARCH. REF: A9.0

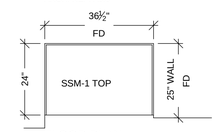

1 FLOOR PLAN
SCALE: 1/2"=1'-0" ITEM: 2-135
ROOM: MD DINING 2.041.00.B
ARCH. REF: A3.2K

MCCARTHY APPROVAL

A. Approved as noted for Architectural Review ☐

B. Review and Resubmit ☐

C. Rejected ☐

This review is for general conformance with Plans and Specifications only. Any deviations from same not clearly noted by the Preparer have not been reviewed. Review shall not constitute a complete check of detailed dimensions or count to serve to relieve the Preparer of contractual responsibility for any error or deviation from contract requirements.

McCarthy

By _____ Date _____

SHOP DRAWING REFERENCE NO. _____

RELEASE FOR PRODUCTION

SIGNATURE: _____

DATE: _____

NOTE: NO CHANGES CAN BE MADE AFTER AUTHORIZATION TO PROCEED.

DATE	NO	REVISION	SUB #	BY
8-14-10	1	PER RFI #1765-0 DATED 7-01-10	–	JB
–	2	–	–	
–	3	–	–	
–	4	–	–	
–	5	–	–	
2-29-12	6	FIELD DIMENSIONS	–	MW
4-19-2012		J09 RELEASED TO SHOP PER APPROVED DRAWINGS & FD	–	JJA

PROJECT : CHOC HOSPITAL TOWER II
455 S. MAIN STREET
ORANGE, CA. 92868

FLOOR : SECOND FLOOR
ROOM # : 2.041.00.B, MD DINING CABINET & TOP
ITEM : 2-135
REF : A9.0

CONTRACTOR : McCARTHY

ARCHITECT : FKP ARCHITECTS

COPYRIGHT
ALL IDEAS DESIGNS, ARRANGEMENTS AND PLANS INDICATED OR REPRESENTED BY THIS DRAWING ARE OWNED BY, AND THE PROPERTY OF P.A.M. AND WERE CREATED,EVOLVED AND DEVELOPED FOR USE ON, AND IN CONECTION WITH THE SPECIFIED PROJECT NONE OF SUCH IDEAS, DESIGNS, ARRANGEMENT OF PLANS SHALL BE USED BY OR DISCLOSED TO ANY PERSON, FIRM OR CORPORATION FOR ANY PURPOSE WHATSOEVER WITHOUT THE WRITTEN PERMISSION OF P.A.M.

FIELD VERIFICATION
P.A.M. SHOP DRAWINGS ARE MADE FOR THE EXCLUSIVE USE OF P.A.M. AND ANY OTHER TRADES USING THESE DRAWING USE THEM AT THERE OWN RISK. DIMENSIONS ON THESE DRAWINGS MAY NOT BE ALWAYS NOTED. FIELD CONDITIONS MAY REQUIRE CHANGES IN DIMENSIONS, SO OTHER TRADES USING THESE DRAWINGS MUST TAKE THEIR OWN FIELD DIMENSIONS.

PACIFIC ARCHITECTURAL MILLWORK
1041 LESLIE ST. LA HABRA, CA. 90631
PH: (714) 525-2059 FAX: (714) 525-2673

DATE: 7-20-11	
DRAWN BY: JB	SCALE: NOTED
JOB: 3635	SUBMITTAL: 06
DWG: 2-36.1	
J09	SHEET(S):

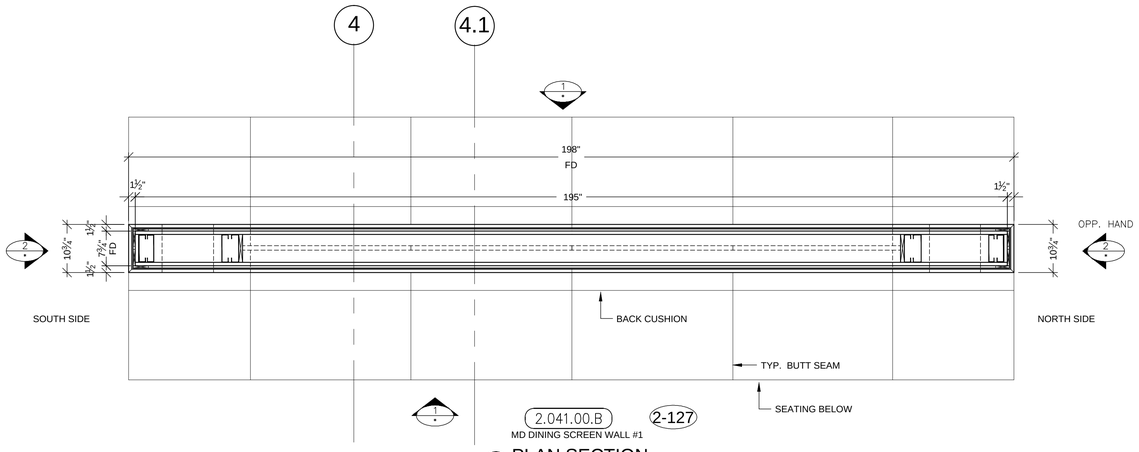

B PLAN SECTION
SCALE: 3/4"=1'-0"
ARCH. REF: NONE

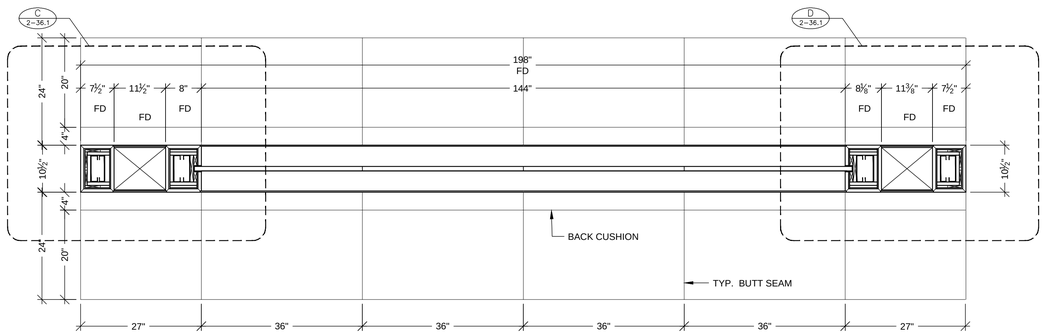

A PLAN SECTION
SCALE: 3/4"=1'-0"
ARCH. REF: NONE

PHASE J09

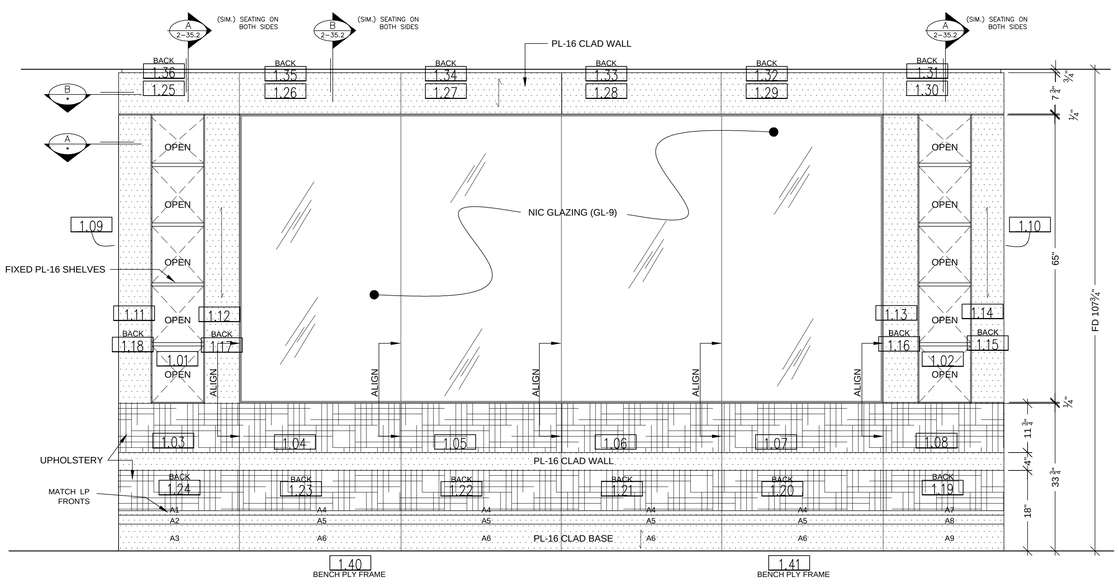

1 ELEVATION
SCALE: 3/4"=1'-0" ITEM: 2-127
ROOM: MD DINING SCREEN WALL #1
ARCH. REF: C5/IA8.5

PHASE J09

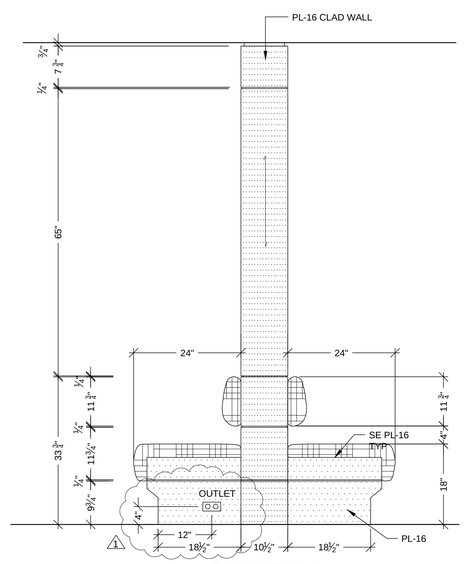

2 ELEVATION
SCALE: 3/4"=1'-0" ITEM: 2-127
ROOM: MD DINING SCREEN WALL #1
ARCH. REF: NONE

FINISH SCHEDULE

PL16 - PLASTIC LAMINATE - (SCREEN WALL)
LAMINART #953, RENAISSANCE, CHERRY (FLAT CUT, BOOK MATCHED, SATIN)

SEAT UPHOLSTERY: KNOLL PATTERN VIBE
COLOR: CHILL K1029-10

BACK UPHOLSTERY: MOMENTUM PATTERN ECHO
COLOR: CLIMATE

MCCARTHY APPROVAL

A. Approved as noted for Architectural Review ☐
B. Review and Resubmit ☐
C. Rejected ☐

This review is for general conformance with Plans and Specifications only. Any deviations from same not clearly noted by the Preparer have not been reviewed. Review shall not constitute a complete check of detailed dimensions or count to serve to relieve the Preparer of contractual responsibility for any error or deviation from contract requirements.

McCarthy

By _____ Date _____ _____

SHOP DRAWING REFERENCE NO. _____

NO	DATE	REVISION	SUB #	BY
1	8-14-10	PER RFI #1765-0 DATED 7-01-10	–	JB
2	–	–	–	–
3	–	–	–	–
4	–	–	–	–
5	2-29-12	FIELD DIMENSIONS	–	MW
	4-19-2012	J09 RELEASED TO SHOP PER APPROVED DRAWINGS & FD	–	JJA

PROJECT :
CHOC HOSPITAL
TOWER II
455 S. MAIN STREET
ORANGE, CA. 92868

FLOOR : SECOND FLOOR
ROOM # : 2.041.00.B, MD DINING SCREEN WALL #1
ITEM : 2-127
REF : C5/IA8.5

CONTRACTOR :
McCARTHY

ARCHITECT :
FKP ARCHITECTS

COPYRIGHT
ALL IDEAS DESIGNS, ARRANGEMENTS AND PLANS INDICATED OR REPRESENTED BY THIS DRAWING ARE OWNED BY, AND THE PROPERTY OF P.A.M. AND WERE CREATED,EVOLVED AND DEVELOPED FOR USE ON, AND IN CONECTION WITH THE SPECIFIED PROJECT. NO OTHER USE OR USE BY OTHER PERSONS OF THIS PLANS SHALL BE USED BY OR DISCLOSED TO ANY OTHER PERSON, FIRM OR CORPORATION FOR ANY PURPOSE WHATSOEVER WITHOUT THE WRITTEN PERMISSION OF P.A.M.

FIELD VERIFICATION

P.A.M. SHOP DRAWINGS ARE MADE FOR THE EXCLUSIVE USE OF P.A.M. AND ANY OTHER TRADES USING THESE DRAWING USE THEM AT THERE OWN RISK. DIMENSIONS ON THESE DRAWINGS MAY NOT BE ALWAYS NOTED, FIELD CONDITIONS MAY REQUIRE CHANGES IN DIMENSIONS, SO OTHER TRADES USING THESE DRAWINGS MUST TAKE THEIR OWN FIELD DIMENSIONS.

PACIFIC ARCHITECTURAL MILLWORK
1041 LESLIE ST, LA HABRA, CA. 90631
PH: (714) 525-2099 FAX: (714) 525-2673

DATE: 05-10-10
DRAWN BY: JND
SCALE: NOTED
JOB: 3635
SUBMITTAL: 06
DWG: 2-36
SHEET(S): J09

RELEASE FOR PRODUCTION
SIGNATURE: _____
DATE: _____
NOTE: NO CHANGES CAN BE MADE AFTER AUTHORIZATION TO PROCEED.

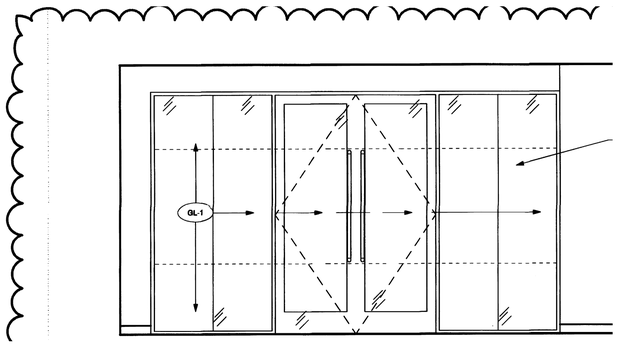

2 ELEVATION
SCALE: 3/8"=1'-0" ITEM: 2-113.2
ROOM: 2.009
ARCH. REF: E5/IA8.4

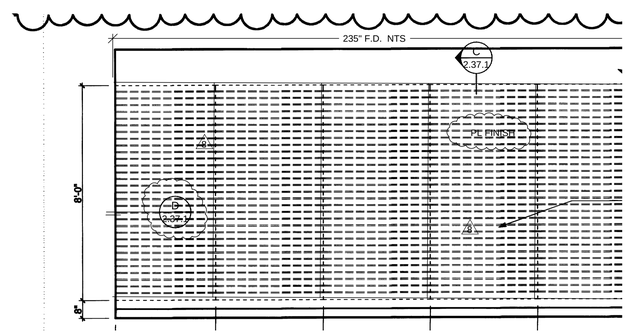

3 ELEVATION
SCALE: 3/8"=1'-0" ITEM: 2-113.1
ROOM: 2.009
ARCH. REF: D5/IA8.4

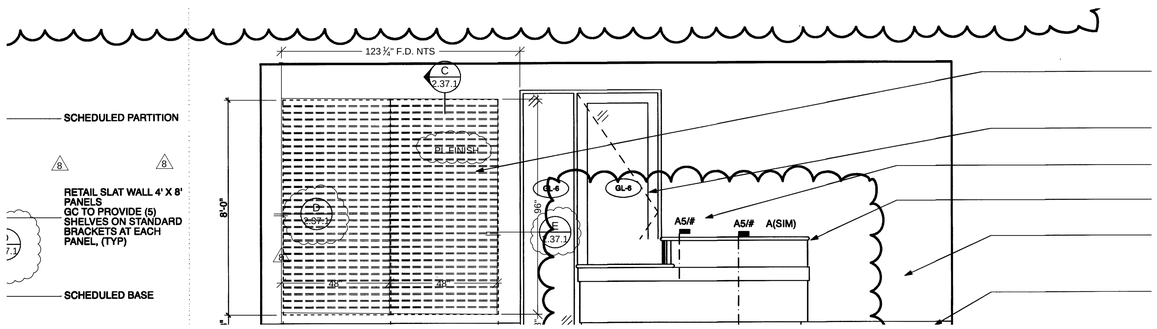

4 ELEVATION
SCALE: 3/8"=1'-0" ITEM: 2-113.1
ROOM: 2.009
ARCH. REF: D3/IA8.4

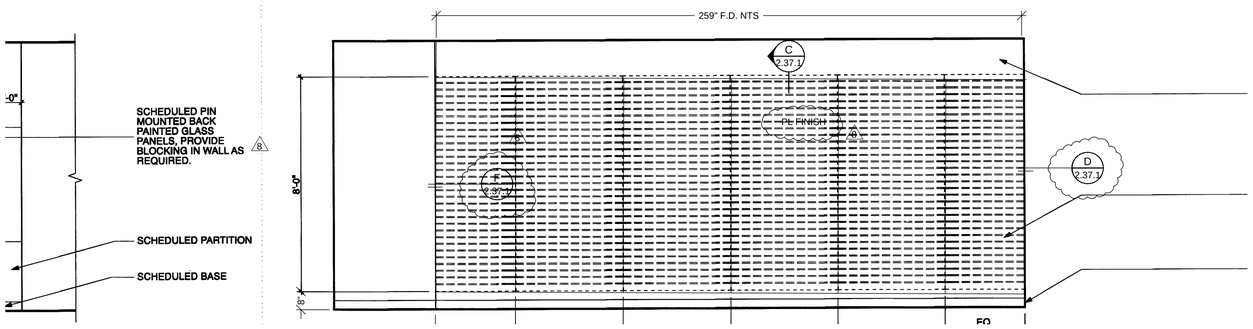

5 ELEVATION
SCALE: 3/8"=1'-0" ITEM: 2-113.1
ROOM: 2.009
ARCH. REF: C3/IA8.4

FINISH SCHEDULE

SLATWALL SYSTEMS: MDF T-SHAPED 3" O.C. 4' X 8'
SLAT DIRECTION ALONG 4' WIDTH. GROOVE INSERT MILL FINISH ALUM. T.
FORMICA 932-58 ANTIQUE WHITE MATTE

HARDWARE SCHEDULE

	ITEM	PART NO.	MANUF.	FINISH / COLOR
1	TOP & BOTTOM PLATE	3.1/963056	B & N	ANODIZED ALUM.
2	CABLE TENSIONER	3.4/963059	B & N	ANODIZED ALUM.
3	END STOP @ CEILING	3.3/963058	B & N	ANODIZED ALUM.
4	SHELF SUPPORT	3.17/963072	B & N	ANODIZED ALUM.
5	CABLE	3.5/963060	B & N	STAINLESS STEEL
6				
7				
8				
9				
10				

MCCARTHY APPROVAL

A. Approved as noted for Architectural Review ☐
B. Review and Resubmit ☐
C. Rejected ☐

This review is for general conformance with Plans and Specifications only. Any deviations from same not clearly noted by the Preparer have not been reviewed. Review shall not constitute a complete check of detailed dimensions or count to serve to relieve the Preparer of contractual responsibility for any error or deviation from contract requirements.

McCarthy

By _____ Date _____

SHOP DRAWING REFERENCE NO. _____

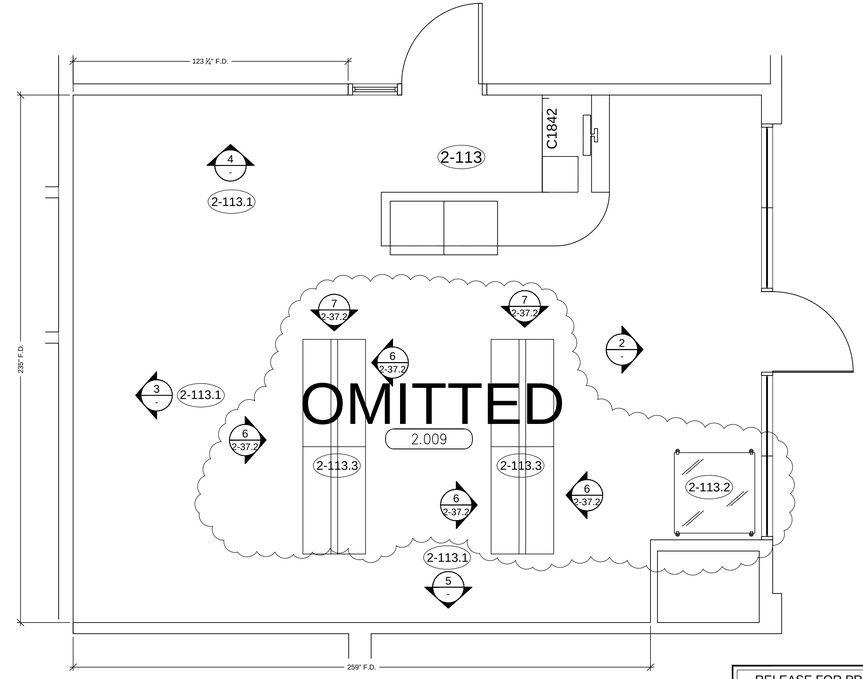

1 FLOOR PLAN
SCALE: 3/8"= 1'-0" ITEM: 2-113.1, 2-113.2
ROOM: 2.009
ARCH. REF: A3.2H
GIFT SHOP

RELEASE FOR PRODUCTION

SIGNATURE: _____

DATE: _____

NOTE: NO CHANGES CAN BE MADE AFTER AUTHORIZATION TO PROCEED.

DATE	NO	REVISION	SUB #	BY
3-14-12	1	FIELD DIMENSIONS		JB
	2			
	3			
	4			
	5			
2-15-11	6	PER R.L.C. DATED 1-20-11		JB

PROJECT :
CHOC HOSPITAL
TOWER II
455 S. MAIN STREET
ORANGE, CA. 92868

FLOOR : SECOND FLOOR
ROOM # : 2.009 GIFT SHOP ITEM : 2-113.1,2-113.2
ITEM : SLATWALL & GLASS SHELVES
REF : IA8.4

CONTRACTOR :
McCARTHY

ARCHITECT :
FKP ARCHITECTS

COPYRIGHT
ALL IDEAS DESIGNS, ARRANGEMENTS AND PLANS INDICATED OR REPRESENTED BY THIS DRAWING ARE OWNED BY, AND THE PROPERTY OF P.A.M. AND WERE CREATED,EVOLVED AND DEVELOPED FOR USE ON, AND IN CONECTION WITH THE SPECIFIED PROJECT. NONE OF SUCH IDEAS, DESIGNS, ARRANGEMENT OF PLANS SHALL BE USED BY OR DISCLOSED TO ANY PERSON, FIRM OR CORPORATION FOR ANY PURPOSE WHATSOEVER WITHOUT THE WRITTEN PERMISSION OF P.A.M.

FIELD VERIFICATION

P.A.M. SHOP DRAWINGS ARE MADE FOR THE EXCLUSIVE USE OF P.A.M. AND ANY OTHER TRADES USING THESE DRAWING USE THEM AT THERE OWN RISK. DIMENSIONS ON THESE DRAWINGS MAY NOT BE ALWAYS NOTED. FIELD CONDITIONS MAY REQUIRE CHANGES IN DIMENSIONS, SO OTHER TRADES USING THESE DRAWINGS MUST TAKE THEIR OWN FIELD DIMENSIONS.

PACIFIC ARCHITECTURAL MILLWORK
1041 LESLIE ST LA HABRA, CA. 90631
PH: (714) 525-2059 FAX: (714) 525-2673

DATE: 12-21-10
DRAWN BY: JB
SCALE: NOTED
JOB: 3635
SUBMITTAL: 19
DWG: 2-37
SHEET(S):

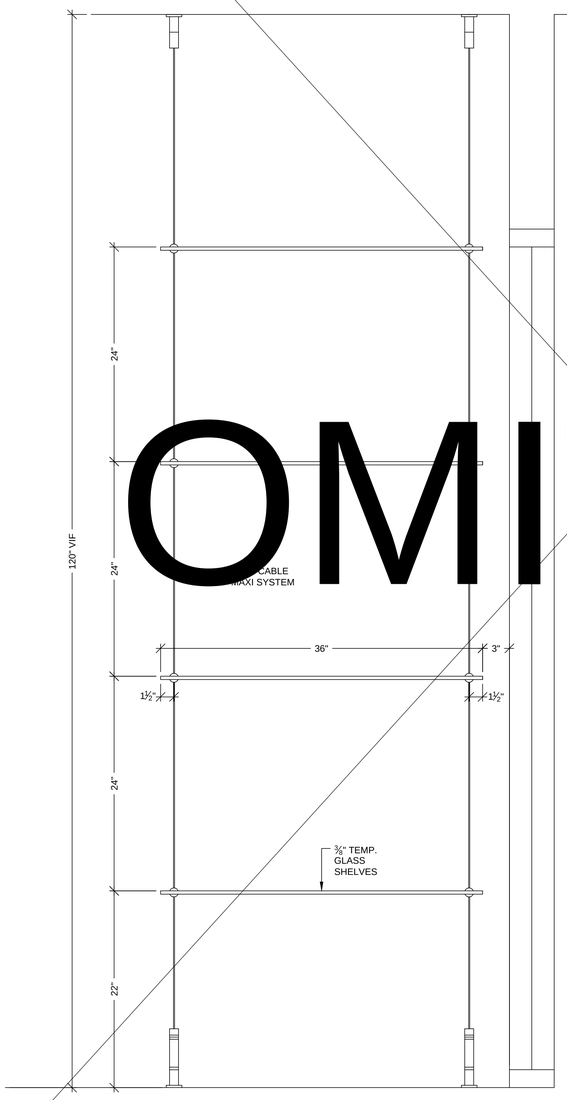

A VERTICAL SECTION
SCALE: 1 1/2" = 1'- 0"
ARCH. REF: E5/IA8.4

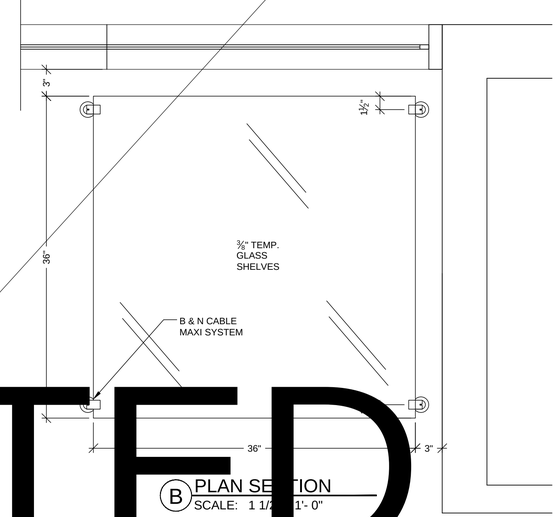

B PLAN SECTION
SCALE: 1 1/2" = 1'- 0"

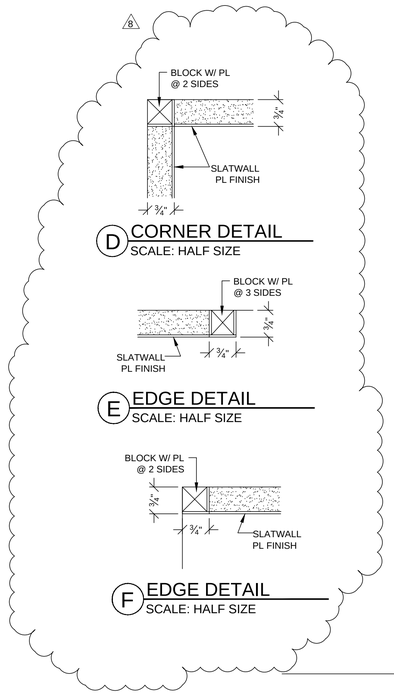

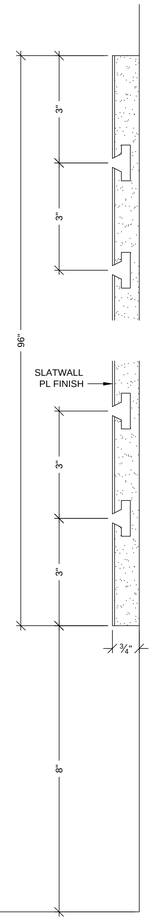

C VERTICAL SECTION
SCALE: HALF SIZE

OMITTED

MCCARTHY APPROVAL

A. Approved as noted for Architectural Review ☐

B. Review and Resubmit ☐

C. Rejected ☐

This review is for general conformance with Plans and Specifications only. Any deviations from same not clearly noted by the Preparer have not been reviewed. Review shall not constitute a complete check of detailed dimensions or count to serve to relieve the Preparer of contractual responsibility for any error or deviation from contract requirements.

McCarthy

By _____ Date _____ _____

SHOP DRAWING REFERENCE NO. _____

RELEASE FOR PRODUCTION

SIGNATURE: _____

DATE: _____

NOTE: NO CHANGES CAN BE MADE AFTER AUTHORIZATION TO PROCEED.

DATE	NO	REVISION	SUB #	BY
X	1	X		JB
	2			
	3			
	4			
	5			
2-15-11	6	PER R.L.C. DATED 1-20-11		JB

PROJECT :
CHOC HOSPITAL
TOWER II
455 S. MAIN STREET
ORANGE, CA. 92868

FLOOR : SECOND FLOOR
ROOM # : 2.009 GIFT SHOP
ITEM : SLATWALL & GLASS SHELVES
REF : IA8.4

ITEM :

CONTRACTOR : McCARTHY

ARCHITECT : FKP ARCHITECTS

COPYRIGHT

ALL IDEAS DESIGNS, ARRANGEMENTS AND PLANS INDICATED OR REPRESENTED BY THIS DRAWING ARE OWNED BY, AND THE PROPERTY OF P.A.M. AND WERE CREATED,EVOLVED AND DEVELOPED FOR USE ON, AND IN CONNECTION WITH THE SPECIFIED PROJECT. NONE OF SUCH IDEAS, DESIGNS, ARRANGEMENTS OR PLANS SHALL BE USED BY OR DISCLOSED TO ANY PERSON, FIRM OR CORPORATION FOR ANY PURPOSE WHATSOEVER WITHOUT THE WRITTEN PERMISSION OF P.A.M.

FIELD VERIFICATION

P.A.M. SHOP DRAWINGS ARE MADE FOR THE EXCLUSIVE USE OF P.A.M. AND ANY OTHER TRADES USING THESE DRAWING USE THEM AT THERE OWN RISK. DIMENSIONS ON THESE DRAWINGS MAY NOT BE ALWAYS NOTED, THERE MAY BE MISSING OR INCORRECT DIMENSIONS, SO OTHER TRADES USING THESE DRAWINGS MUST TAKE THIER OWN FIELD DIMENSIONS.

PACIFIC
ARCHITECTURAL MILLWORK
1041 LESLIE ST. LA HABRA, CA. 90631
PH: (714) 525-2059 FAX: (714) 525-2673

DATE: 12-21-10	
DRAWN BY: JB	SCALE: NOTED
JOB: 3635	SUBMITTAL: 19
DWG: 2-37.1	
	SHEET(S):

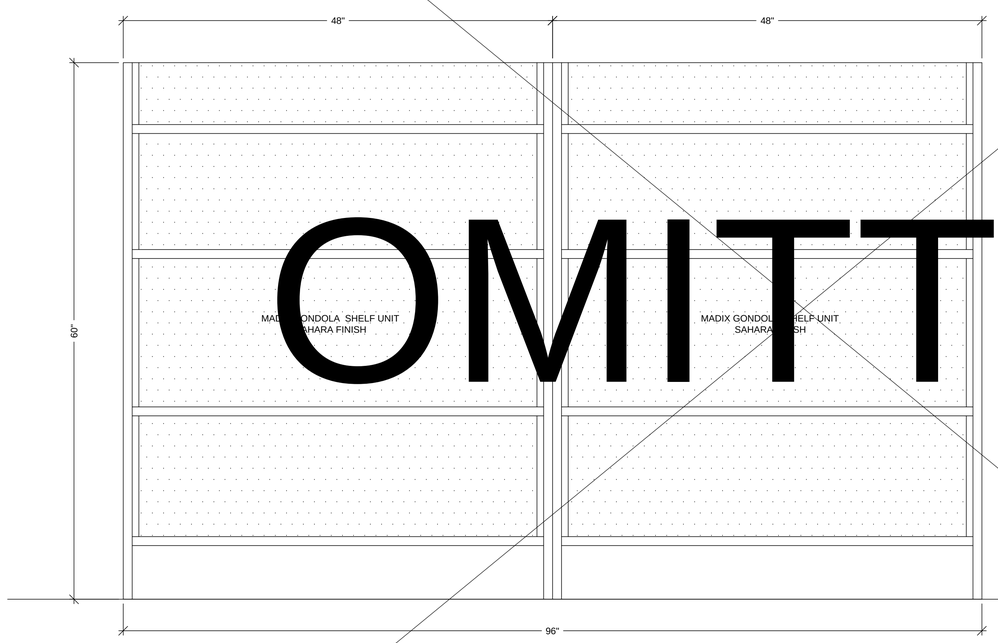

6 ELEVATION
SCALE: 1 1/2" = 1'- 0" ITEM: 2-113.3
ROOM: 2.009
(2 REQUIRED)

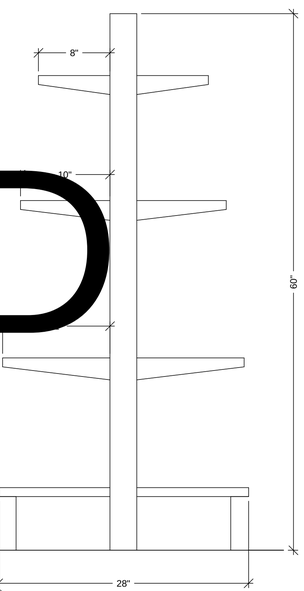

7 ELEVATION
SCALE: 1 1/2" = 1'- 0" ITEM: 2-113.3
ROOM: 2.009
(2 REQUIRED)

OMITTED

MCCARTHY APPROVAL

A. Approved as noted for Architectural Review ☐

B. Review and Resubmit ☐

C. Rejected ☐

This review is for general conformance with Plans and Specifications only. Any deviations from same not clearly noted by the Preparer have not been reviewed. Review shall not constitute a complete check of detailed dimensions or count to serve to relieve the Preparer of contractual responsibility for any error or deviation from contract requirements.

McCarthy

By _____ Date _____ _____

SHOP DRAWING REFERENCE NO. _____

RELEASE FOR PRODUCTION

SIGNATURE: _____

DATE: _____

NOTE: NO CHANGES CAN BE MADE AFTER AUTHORIZATION TO PROCEED.

DATE	NO	REVISION	SUB #	BY
X	X	X		JB
	1			
	2			
	3			
	4			
	5			
	6			

PROJECT :
CHOC HOSPITAL
TOWER II
455 S. MAIN STREET
ORANGE, CA. 92868

FLOOR : SECOND FLOOR
ROOM # : 2.009 GIFT SHOP
ITEM : SLATWALL & GLASS SHELVES
REF : IA8.4

ITEM :

ARCHITECT :
FKP ARCHITECTS

CONTRACTOR :
McCARTHY

COPYRIGHT
ALL IDEAS DESIGNS, ARRANGEMENTS AND PLANS INDICATED OR REPRESENTED BY THIS DRAWING ARE THE PROPERTY OF PACIFIC MILLWORK AND WERE CREATED,EVOLVED AND DEVELOPED FOR USE ON AND IN CONECTION WITH THE SPECIFIED PROJECT. NONE OF SUCH IDEAS, DESIGNS, ARRANGEMENT OF PLANS SHALL BE USED BY OR DISCLOSED TO ANY PERSON, FIRM OR CORPORATION FOR ANY PURPOSE WHATSOEVER WITHOUT THE WRITTEN PERMISSION OF PLMI .

FIELD VERIFICATION

P.A.M. SHOP DRAWINGS ARE MADE FOR THE EXCLUSIVE USE OF THE PROJECT SPECIFIED. THOSE WHO USE THE DRAWING USE THEM AT THERE OWN RISK. DIMENSIONS ON THESE DRAWINGS MAY NOT BE ALWAYS NOTED. FIELD CONDITIONS MAY REQUIRE CHANGES IN DIMENSIONS, SO OTHER TRADES USING THESE DRAWINGS MUST TAKE THEIR OWN FIELD DIMENSIONS.

PACIFIC
ARCHITECTURAL MILLWORK
1041 LESLIE ST. LA HABRA, CA. 90631
PH: (714) 525-2059 FAX: (714) 525-2673

DATE: 12-30-10
DRAWN BY: JB
SCALE: NOTED
JOB: 3635
SUBMITTAL: 20
DWG: 2-37.2
SHEET(S):

FINISH SCHEDULE

SLATWALL SYSTEMS: MDF T-SHAPED 3" O.C. 4' X 8'
SLAT DIRECTION ALONG 4' WIDTH. GROOVE INSERT MILL FINISH ALUM. T.
FORMICA 932-58 ANTIQUE WHITE MATTE

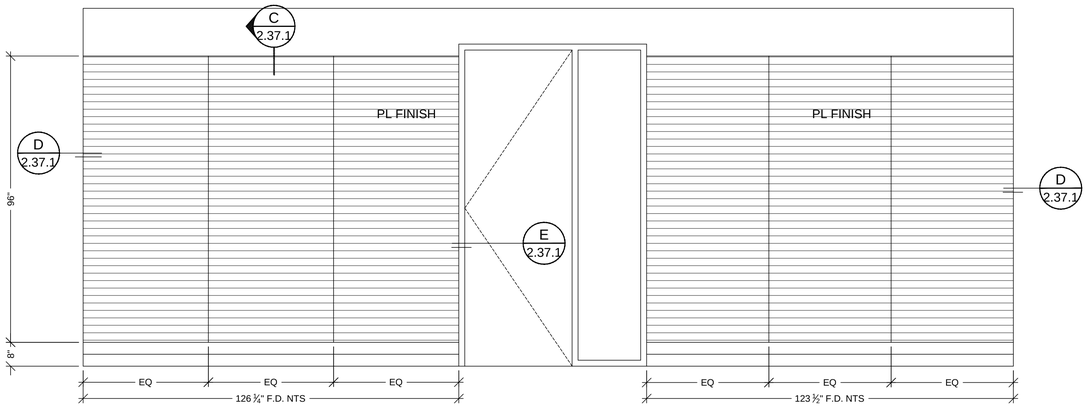

2 ELEVATION
SCALE: 1/2"=12" ROOM: 2.007
REF: A6/IA8.4 ITEM: 2-113.4

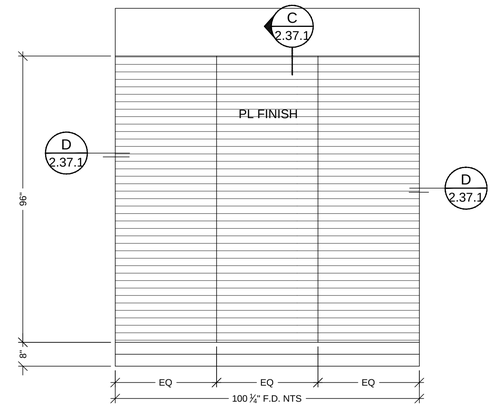

3 ELEVATION
SCALE: 1/2"=12" ROOM: 2.007
REF: A4/IA8.4 ITEM: 2-113.4

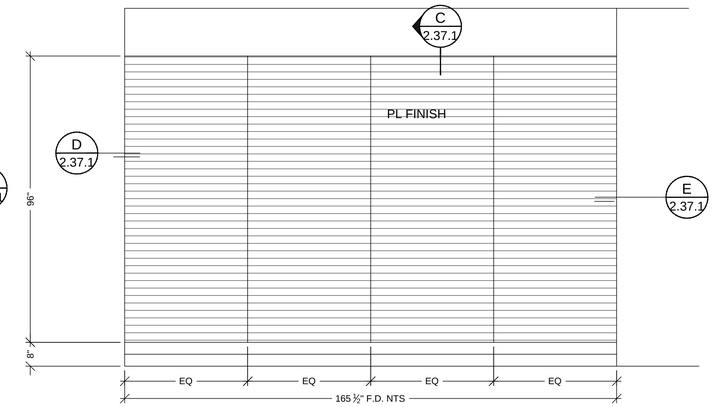

4 ELEVATION
SCALE: 1/2"=12" ROOM: 2.007
REF: A3/IA8.4 ITEM: 2-113.4

MCCARTHY APPROVAL

A. Approved as noted for Architectural Review ☐
B. Review and Resubmit ☐
C. Rejected ☐

This review is for general conformance with Plans and Specifications only. Any deviations from same not clearly noted by the Preparer have not been reviewed. Review shall not constitute a complete check of detailed dimensions or count to serve to relieve the Preparer of contractual responsibility for any error or deviation from contract requirements.

McCarthy

By _____ Date _____

SHOP DRAWING REFERENCE NO. _____

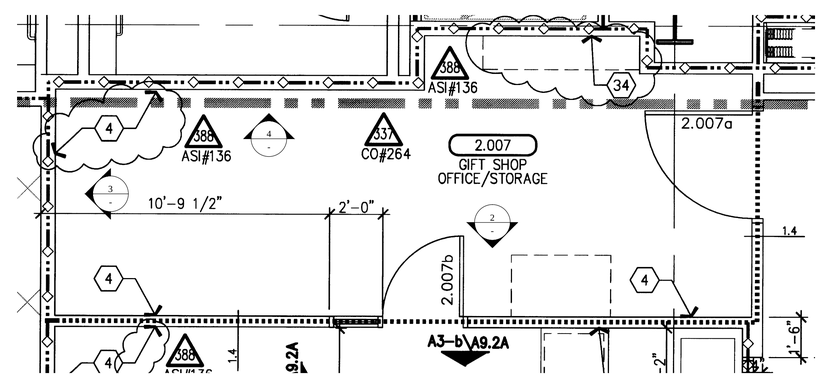

1 FLOOR PLAN
SCALE: 3/8"=12" ROOM: 2.007
REF: A3.2H ITEM: 2-113.4

RELEASE FOR PRODUCTION

SIGNATURE: _____

DATE: _____

NOTE: NO CHANGES CAN BE MADE AFTER AUTHORIZATION TO PROCEED.

DATE	NO	REVISION	SUB #	BY
12-19-11	2	PER A.S.I. 136 DATED 11-17-11	37	JB
3-14-12	3	FIELD DIMENSIONS		JB
	4			
	5			
	6			

PROJECT :
CHOC HOSPITAL
TOWER II
455 S. MAIN STREET
ORANGE, CA. 92868

FLOOR : SECOND FLOOR
ROOM # : 2.009 GIFT SHOP
ITEM : SLATWALL & GLASS SHELVES
REF : IA8.4

CONTRACTOR :
McCARTHY

ARCHITECT :
FKP ARCHITECTS

COPYRIGHT
ALL IDEAS DESIGNS, ARRANGEMENTS AND PLANS INDICATED OR REPRESENTED BY THIS DRAWING ARE OWNED BY, AND THE PROPERTY OF P.A.M. AND WERE CREATED,EVOLVED AND DEVELOPED FOR USE ON, AND IN CONECTION WITH THE SPECIFIED PROJECT. NONE OF SUCH IDEAS, DESIGNS, ARRANGEMENT OF PLANS SHALL BE USED BY OR DISCLOSED TO ANY PERSON, FIRM OR CORPORATION FOR ANY PURPOSE WHATSOEVER WITHOUT THE WRITTEN PERMISSION OF P.A.M.

FIELD VERIFICATION
P.A.M. SHOP DRAWINGS ARE MADE FOR THE EXCLUSIVE USE OF P.A.M. AND ANY OTHER TRADES USING THESE DRAWING USE THEM AT THERE OWN RISK. DIMENSIONS ON THESE DRAWINGS MAY NOT BE ALWAYS NOTED. FIELD CONDITIONS MAY REQUIRE CHANGES IN DIMENSIONS, SO OTHER TRADES USING THESE DRAWINGS MUST TAKE THEIR OWN FIELD DIMENSIONS.

PACIFIC ARCHITECTURAL MILLWORK
1041 LESLIE ST. LA HABRA, CA. 90631
PH: (714) 525-2059 FAX: (714) 525-2673

DATE: 12-19-11
DRAWN BY: JB
SCALE: NOTED
JOB: 3635
SUBMITTAL: 37
DWG: 2-37.3
SHEET(S):