© 2009 FKP Architects, Inc. All rights reserved. No part of this document may be reproduced or utilized in any form without prior written authorization of FKP Architects, Inc.

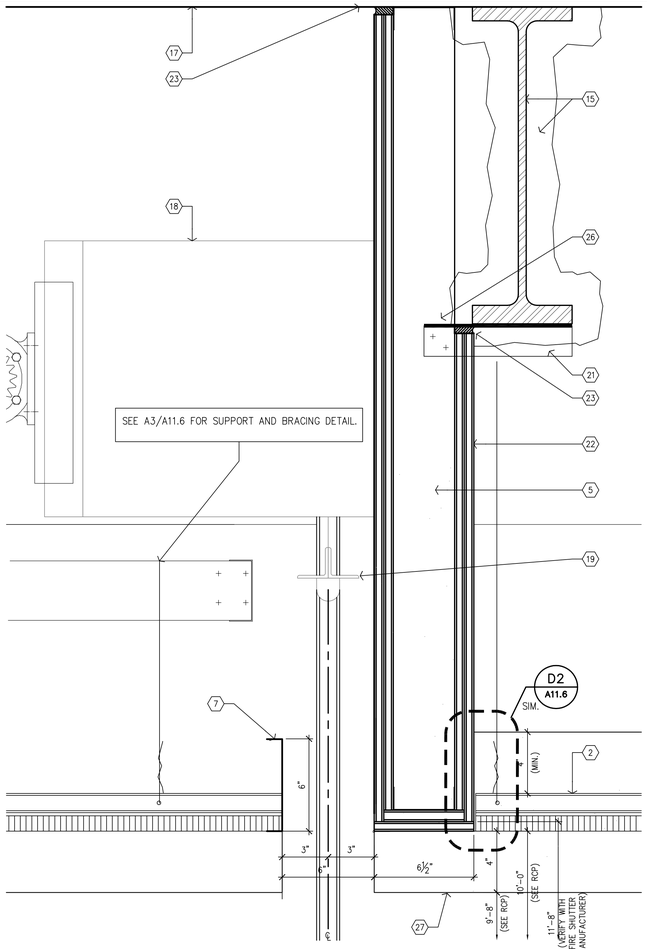

C6 ENLARGED DETAIL - SUSPENDED ACOUSTICAL CLG
3" = 1'-0"

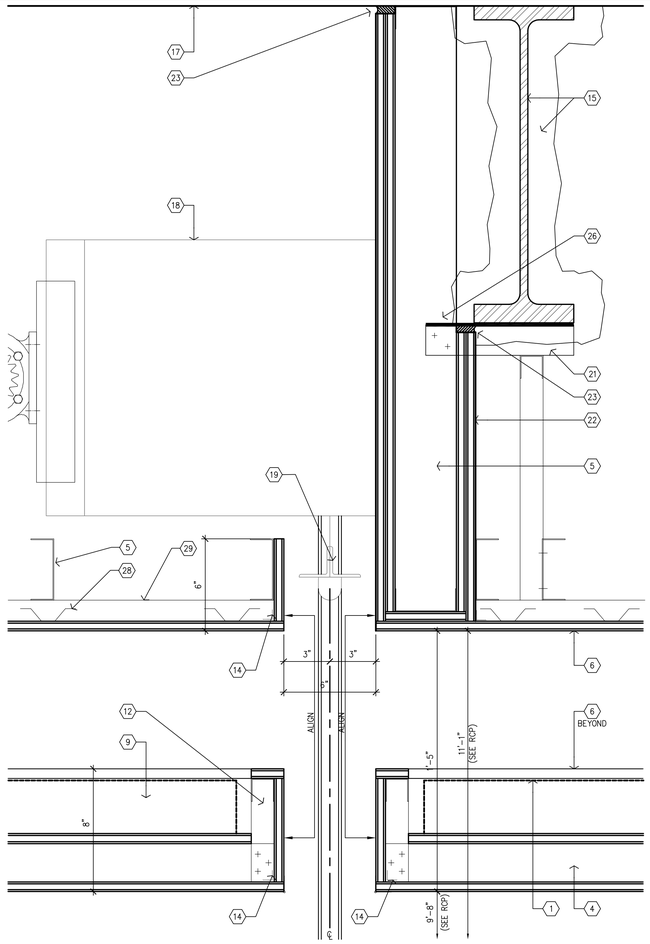

C4 ENLARGED DETAIL - FIRE SHUTTER AT LIGHT COVE
3" = 1'-0"

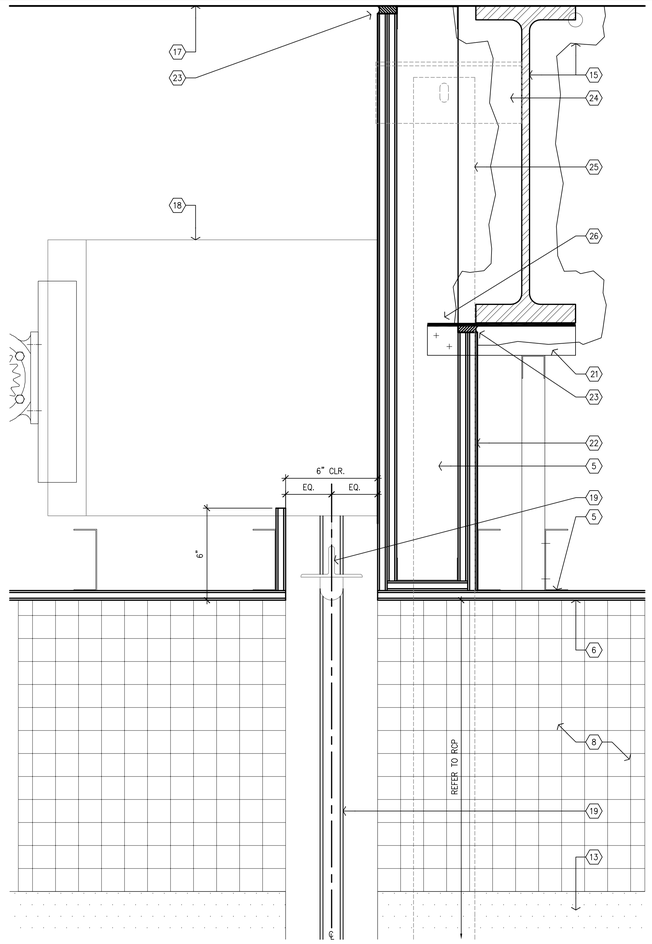

C2 ENLARGED DETAIL - FIRE SHUTTER AT FEATURE WALL
3" = 1'-0"

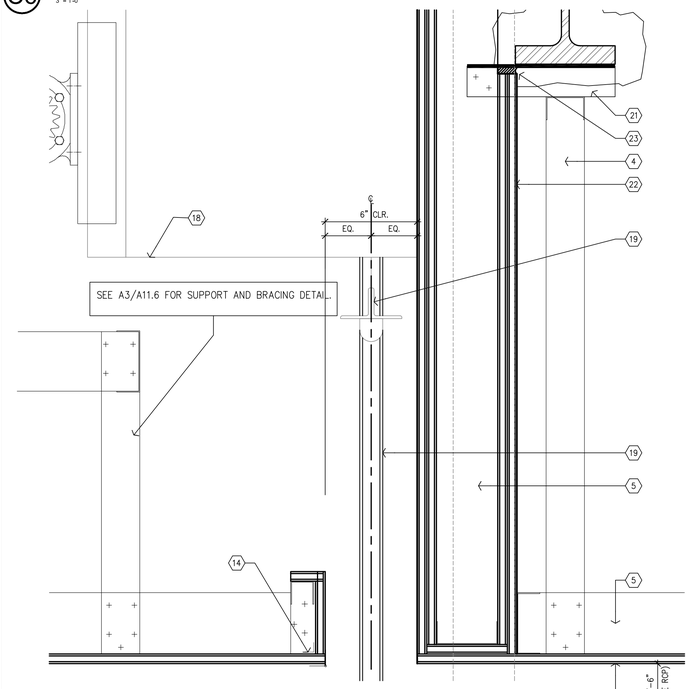

A6 ENLARGED DETAIL - GYPSUM BOARD CLG
3" = 1'-0"

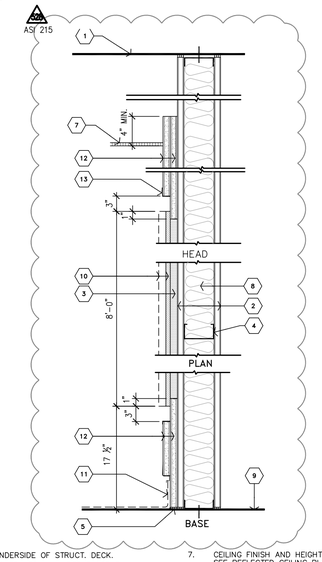

1. UNDERSIDE OF STRUCT. DECK.
2. SCHEDULED WALL PER FLOOR PLAN
3. 1/2" DENSSHIELD TILE BACKER
4. METAL STUD @ 16" O.C.
5. HOLD GYPSUM BOARD 1/8" MIN. ABOVE FLOOR BUT NOT MORE THAN 3/8". REMOVE SHIMS.
6. NOT USED
7. CEILING FINISH AND HEIGHT. SEE REFLECTED CEILING PLAN
8. BATT INSULATION
9. FLOOR SLAB.
10. 3/4" THK. (MAX) x 1'-7" x 1'-7" TRANSLUCENT RESIN PANELS
11. SCHEDULE BASE
12. 1/2"-GYPSUM BOARD.
13. "J" MOULDING (TYP.)

ASI 215

A3 DONOR WALL SECTION DETAIL
CO #322

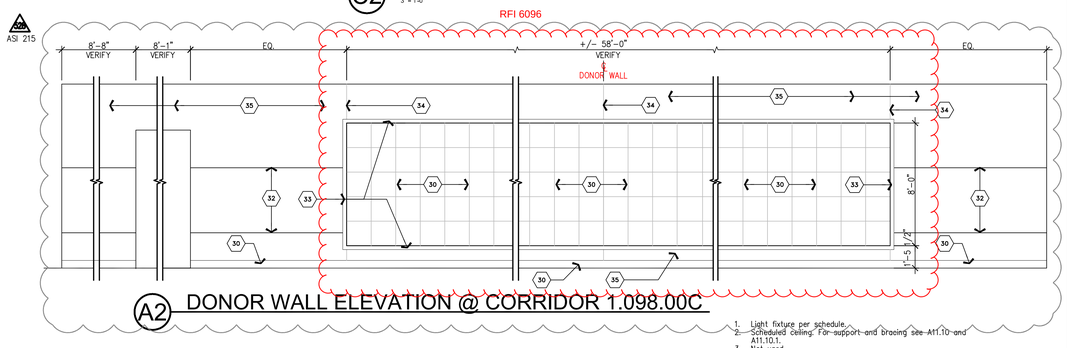

A2 DONOR WALL ELEVATION @ CORRIDOR 1.098.00C

1. Light fixture per schedule.
2. Scheduled ceiling. For support and bracing see A11.10 and A11.10.1.
3. Not used.
4. 2½" metal studs @ 16" O.C. max.
5. 4" metal studs @ 16" O.C.
6. ⅝" thick gypsum board, painted.
7. Transition perimeter panel, aluminum, paint to match gypsum board.
8. Scheduled tile finish
9. Scheduled light fixture
10. Scheduled wall tile
11. Not used.
12. 1½" metal studs @ 16" O.C.
13. Feature wall. See interior design drawings for details.
14. 2" x 2" Continuous angle.
15. Structural steel beam/fireproofing
16. Not used.
17. Concrete over metal deck
18. Fire shutter housing.
19. Fire shutter bottom bar with 'Featheredge' sensor.
20. Fire shutter track beyond
21. 1-5/8" Z-furring channel clip, 20 ga.
22. (2) layers ⅝" Type 'X' gypsum board
23. Rated sealant.
24. Support angle per fire shutter manufacturer
25. Tube steel per fire shutter manufacturer
26. Notch stud @ Z-furring channel
27. Bottom edge of light cove beyond
28. 7/8 Furr Channel
29. 2"x2"x2" Z Bar-20 GA continuous
30. Donor Wall- 1'-7" x 1'-7" translucent resin panels over ½" denshield tile backer.
31. Schedule base.
32. ¼" drywall reveal- paint to match adjacent finish.
33. ¼" gap typ. around the edge of donor wall.
34. Drywall control joint location as indicated.
35. 2 layer of ½" gyp. bd.

ASI 215

Note: Refer to detail A3/A11.6 for metal stud framing/bracing

A1 NOTES TO SHEET

FKP Architects

ARCHITECT OF RECORD
Paul C. Gloriod

LICENSED ARCHITECT MICHAEL L. SWENY NO. C 20081 REV. 1-31-13 STATE OF CALIFORNIA

Changes on these drawings do not consist of materially altered changes to approved drawings and don't require a change order.
OSHPD review ACO _____
OSHPD review FLSO _____
OSHPD review DSE _____

REVISIONS

22	07/18/11	CO #176
42	04/20/12	CO#322
22	05/17/12	ASI#215

APPROVAL

Office of Statewide Health Planning & Development/FDD REVIEWED IN ACCORDANCE WITH THE REQUIREMENTS OF T24, CCR APPROVED

CHANGE ORDER#_____
INSTRUCTION BULLETIN#_____
DEFERRED APPROVAL#_____
ADDENDUM_____

PROJECT NAME
CHILDREN'S HOSPITAL OF ORANGE COUNTY
455 S. Main St.
Orange, CA 92868-3874

TOWER II

CHOC HOSPITAL

PROJECT NUMBER
12011.00
Increment #7

OSHPD - PROJECT NUMBER
IL 072072-30

ISSUE
OSHPD PERMIT

DATE
01/27/2010

SCALE
VARIES

DRAWING TITLE
INTERIOR SECTION DETAIL

DRAWING NUMBER
A10.1.7

22 CO #176

N:\06XXX\06102 CHOC TOWER 2 SHELL BUILDING\FKP CONTRACTED PROJECTS\PROJECT INCREMENTS\INCR. #07_TENANT IMPROVEMENT\OSHPD PERMIT (CONSTRUCTION DOCUMENTS)\100602_CO#_____\A10.1.7 INTERIOR SECTION DETAILDWG
5/17/2012
RONALD