© 2009 FKP Architects, Inc. All rights reserved. No part of this document may be reproduced or utilized in any form without prior written authorization of FKP Architects, Inc.

EQUIPMENT ANCHORAGE & SEISMIC ENGINEERING
www.equipmentanchorage.com

SMOKEGUARD	DSN. R. LA BRIE	SHEET 3
M900 SMOKE GUARD SYSTEM	JOB NO. 11-1009	
	DATE 5/6/10	OF 3 SHEETS

SEISMIC ANCHORAGE — WALL MOUNTED

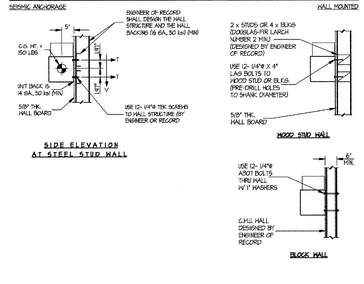

EQUIPMENT ANCHORAGE & SEISMIC ENGINEERING
www.equipmentanchorage.com

SMOKEGUARD	DSN. R. LA BRIE	SHEET 2
M900 SMOKE GUARD SYSTEM	JOB NO. 11-1009	
	DATE 5/6/10	OF 3 SHEETS

SEISMIC ANCHORAGE — WALL MOUNTED

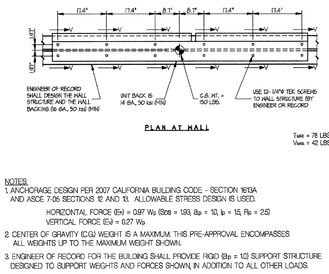

T_{ANC} = 78 LBS/SCREW
V_{ANC} = 42 LBS/SCREW

NOTES:
1. ANCHORAGE DESIGN PER 2007 CALIFORNIA BUILDING CODE - SECTION 1616A AND ASCE 7-05 SECTIONS 12 AND 13. ALLOWABLE STRESS DESIGN IS USED.
   HORIZONTAL FORCE (EH) = 0.8F Wp (Sds/ρ = 1.93, Ip = 1.0, Ip = 1.5, Rp = 2.5)
   VERTICAL FORCE (EV) = 0.2F Wp
2. CENTER OF GRAVITY (C.G.) WEIGHT IS A MAXIMUM. THIS PRE-APPROVAL ENCOMPASSES ALL WEIGHTS UP TO THE MAXIMUM WEIGHT SHOWN.
3. ENGINEER OF RECORD FOR THE BUILDING SHALL PROVIDE RIGID (Ωp = 1.0) SUPPORT STRUCTURE DESIGNED TO SUPPORT WEIGHTS AND FORCES SHOWN, IN ADDITION TO ALL OTHER LOADS.
4. SEE GENERAL NOTES SHEET 1.

EQUIPMENT ANCHORAGE & SEISMIC ENGINEERING
2901 Connery Way Suite B
Winnemucca, NV 89445
Phone (408) 541-3273 Fax: (408) 541-3274

Sheet 1 of 3

Office of Statewide Health Planning and Development
ANCHORAGE PRE-APPROVAL
OPA-2494-07

Equipment Manufacturer: SmokeGuard

Equipment Type: M900 Smoke Guard System

GENERAL NOTES
1. FORCES PER ASCE 7-05 SECTION 13.3.1, EQUATIONS 13.3-1, 13.3-2 & 13.3-3, WHERE S_{DS} = 1.93, a_p = 1.0, I_p = 1.5 & R_p = 2.5
2. THIS PRE-APPROVAL CONFORMS TO THE 2007 CALIFORNIA BUILDING CODE.
3. THE DETAILS IN THIS PRE-APPROVAL MAY BE USED AT ANY LOCATION IN THE STATE OF CALIFORNIA. THE ELEVATED FLOOR DETAILS MAY BE USED AT ANY HEIGHT IN A BUILDING.
4. ALL ANCHOR FORCES SHOWN ON THE DRAWINGS ARE WORKING LOADS (AS OPPOSED TO STRENGTH LEVEL LOADS) AND MAY BE USED FOR ALLOWABLE STRESS DESIGN.
5. THIS PRE-APPROVAL COVERS THE ANCHORAGE OF THE UNIT ONLY.

RESPONSIBILITIES OF THE STRUCTURAL ENGINEER OF RECORD
6. DESIGN BACKING BARS, STUDS, ETC. WHICH THE UNITS ARE ATTACHED TO AS NOTED ON THE DRAWINGS. THE SEOR SHALL ALSO VERIFY THE ADEQUACY OF THE STRUCTURES (SUCH AS WALLS AND FLOORS) WHICH SUPPORT THE UNITS FOR THE LOADS IMPOSED ON THEM BY THE UNITS AS WELL AS ALL OTHER LOADS.
7. PROVIDE ANY SUPPORTING STRUCTURE REQUIRED TO SUPPORT WEIGHTS AND FORCES SHOWN, IN ADDITION TO ALL OTHER LOADS.
8. VERIFY THAT THE INSTALLATION IS IN CONFORMANCE WITH THE 2007 CBC AND WITH THE DETAILS SHOWN IN THIS PRE-APPROVAL. VERIFY THAT THE ACTUAL EQUIPMENTS WEIGHT, CG LOCATION, ANCHOR LOCATIONS, ANCHOR DETAILS AND THE MATERIAL AND GAGE OF THE UNIT WHERE ATTACHMENTS ARE MADE AGREE WITH THE INFORMATION SHOWN ON THE PRE-APPROVAL DOCUMENTS.

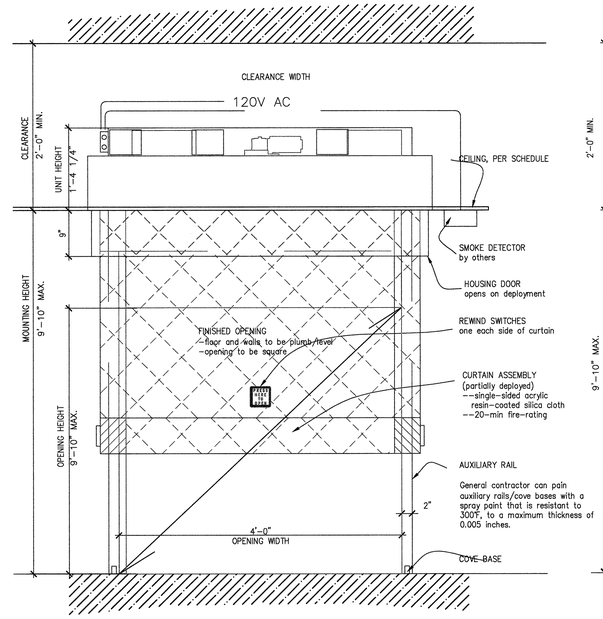

C3 SMOKE GUARD MODEL 900 OPA

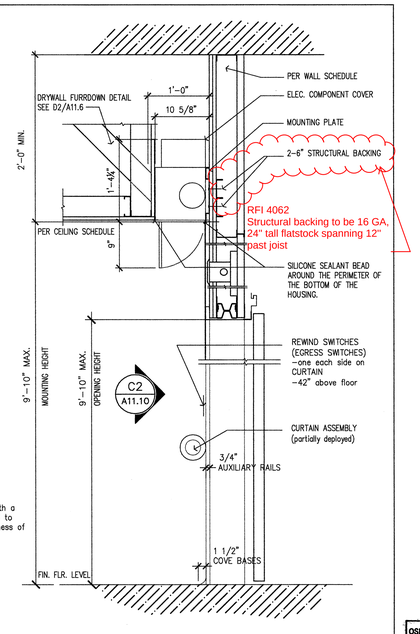

C2 SMOKE GUARD MODEL 900 ELEVATION

C1 SMOKE GUARD MODEL 900 SECTION

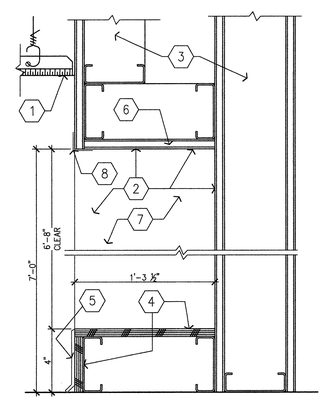

1. CEILING SCHEDULE
2. PAINT ALL (3) WALL SURFACE 'WHITE'
3. SCHEDULE PARTITION
4. 1/2" THK. PLYWOOD (FIRE TREATED)
5. SCHEDULE BASE
6. FURRED DOWN @ 7'-0" A.F.F.
7. WING WALL BEYOND PER WALL SCHEDULE
8. CORNER BEAD- TYP.

B6 SECTION THRU DISPLAY

RFI 5091 Revised product for Lifetime Cumulative Display

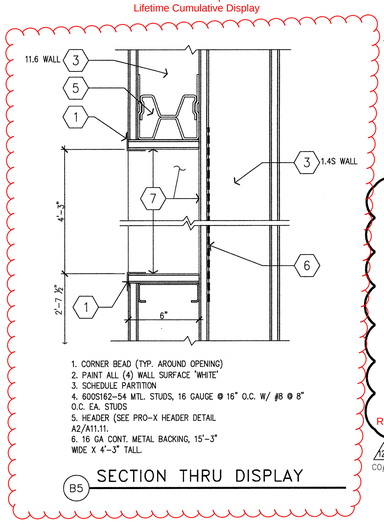

1. CORNER BEAD (TYP. AROUND OPENING)
2. PAINT ALL (4) WALL SURFACE 'WHITE'
3. SCHEDULE PARTITION
4. 600S162-54 MTL. STUDS, 16 GAUGE @ 16" O.C. W/ #8 @ 8" O.C. EA. STUDS
5. HEADER (SEE PRO-X HEADER DETAIL A2/A11.11.
6. 16 GA CONT. METAL BACKING, 15'-3" WIDE X 4'-3" TALL.

B5 SECTION THRU DISPLAY

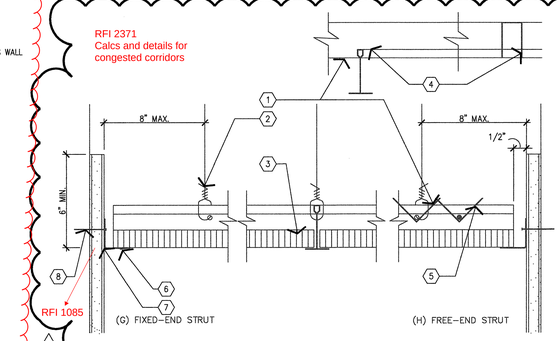

1. SPACERS MAY BE SLOTTED ANGLES OR CHANNELS WITH "DIAMOND POINTS" OF SPRING STEEL WHICH SNAP TIGHT TO PREVENT MOVEMENT OF STRUT.
2. 12 GA HANGER WIRE W/ 3 TIGHT TURNS IN 1 1/2".
3. ACOUSTIC TILE
4. CHANNEL
5. SLOTTED ANGLE SPACER W/HORIZ. 60 RINGSHANK NAIL. ALTERNATE LOCATION W/OUT NAIL. NOTCHING PERMITTED ONLY AT RUNNER
6. POP RIVET 1/8" DIA. EA. TEE
7. CONT ANGLE 2" X 2" X 20 GA.
8. S12W PAN HEAD SCREWS TO MTL STUDS @ 32" O.C.

B4 CEILING DETAIL

KEYNOTES REFER TO DETAIL TITLES

NOTE:
SUSPENDED ACOUSTICAL CEILING SYSTEM MUST BE INSTALLED IN ACCORDANCE WITH U.B.C STANDARD CHAPTER 25
PROVIDE 4-WAY SEISMIC SPLAY WIRES PER NOTE 6.

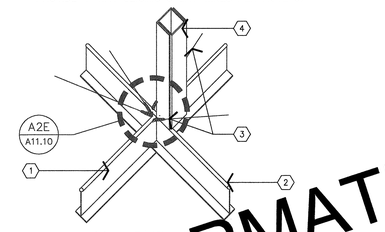

(B) STRUT/ SPLAY BRACING

1. CROSS RUNNER
2. MAIN RUNNER
3. 4-WAY SEISMIC SPLAY WIRES AT 45 DEGREE ANGLE TO MAIN RUNNER DIRECTIONS.
4. 2 1/2" DEEP LEG TRACK X 18 GA. FOR 6'-6" LONG OR LESS USE (1) 2 1/2"X 18 GA. DEEP LEG TRACK 1 PER 96 S.F.

B2 CEILING DETAILS

1. 12" GA. (MIN) HANGER WIRES MAY BE USED FOR UP TO AND INCLUDING 4'-0" x 4'-0" GRID SPACING ALONG MAIN RUNNERS. SPLICES WILL NOT BE PERMITTED IN ANY HANGER WIRES UNLESS SPECIFICALLY APPROVED BY O.S.H.P.D.
2. PROVIDE 12 GA. HANGER WIRES AT THE ENDS OF ALL MAIN AND CROSS RUNNERS WITHIN 8" FROM THE SUPPORT OR WITHIN 1/4 OF THE LENGTH OF THE END TEE, WHICHEVER IS LEAST, FOR THE PERIMETER OF THE CEILING AREA.
3. PROVIDE TRAPEZE OR OTHER SUPPLEMENTARY SUPPORT MEMBERS AT OBSTRUCTIONS TO MAIN HANGER SPACING. PROVIDE ADDITIONAL HANGERS, STRUTS OR BRACES AS REQUIRED AT ALL CEILING BREAKS, SOFFITS OR DISCONTINUOUS AREAS. HANGER WIRES THAT ARE MORE THAN 1 IN 6 OUT OF PLUMB ARE TO HAVE COUNTER-SLOPING WIRES.
4. CEILING GRID MEMBERS MAY BE ATTACHED TO NOT MORE THAN 2 ADJACENT WALLS. CEILING GRID MEMBERS SHOULD BE AT LEAST 1/2 INCH FREE OF OTHER WALLS. IF WALLS RUN DIAGONALLY TO CEILING GRID SYSTEM RUNNERS, ONE END OF MAIN AND CROSS RUNNERS SHOULD BE FREE AND A MINIMUM OF 1/2 INCH CLEAR OF WALL.
5. AT THE PERIMETER OF THE CEILING AREA WHERE MAIN OR CROSS RUNNERS AR NOT CONNECTED TO THE ADJACENT WALL, PROVIDE INTERCONNECTION BETWEEN THE RUNNERS AT THEIR END TO PREVENT LATERAL SPREADING. A METAL STRUT OR A 16 GA WIRE OR ALTERNATIVE MECHANICAL CONNECTION TO THE RUNNER MAY BE USED. WHERE THE PERPENDICULAR DISTANCE BETWEEN THE WALL TO THE FIRST PARALLEL RUNNER IS 12" OR LESS, THIS INTERCONNECTION IS NOT REQUIRED.
6. PROVIDE SETS OF FOUR 12 GA. SPLAY HANGING WIRES PLACED 90 DEGREES FROM EACH OTHER AT THE FOLLOWING SPACING:
   A. FOR HOSPITAL BUILDINGS, PLACE SPLAY WIRES NOT MORE THAN 8 FEET BY 12 FEET ON CENTER.
   B. PROVIDE SPLAY WIRES AT LOCATIONS NOT MORE THAN 1/2 THE SPACING GIVEN IN (A) ABOVE FROM EACH PERIMETER WALL AND AT THE EDGE OF VERTICAL CEILING OFFSETS FOR HOSPITAL BUILDINGS.
   THE USE OF THESE WIRES SHOULD NOT EXCEED 45 DEGREES FROM THE PLANE OF THE CEILING AND SHOULD BE TAUT WITHOUT CAUSING THE CEILING TO LIFT. SPLICES IN BRACING WIRES WILL NOT BE PERMITTED WITHOUT SPECIAL OSA/SSS APPROVAL.
7. ANCHOR HANGER WIRES WITH HILTI .145 SHANK DIAMETER POWDER DRIVEN FASTENERS. HANGER OR BRACING WIRE ANCHORS TO THE STRUCTURE SHOULD BE INSTALLED IN SUCH A MANNER THAT THE DIRECTION OF THE WIRE ALIGNS AS CLOSELY AS POSSIBLE WITH THE DIRECTION OF THE FORCES ACTING ON THE WIRE.
8. SEPARATE ALL CEILING HANGING AND BRACING WIRES AT LEAST 6 INCHES FROM ALL UNBRACED DUCTS, PIPES, CONDUIT, ETS. IT IS ACCEPTABLE TO ATTACH LIGHTWEIGHT ITEMS, SUCH AS SINGLE ELECTRICAL CONDUIT NOT EXCEEDING 3/4" NOMINAL DIAMETER, TO HANGER WIRES USING CONNECTORS ACCEPTABLE TO OSA/SSS.
9. ATTACH ALL LIGHT FIXTURES TO THE CEILING GRID RUNNERS TO RESIST A HORIZONTAL FORCE EQUAL TO THE WEIGHT OF THE FIXTURES.
10. FLUSH OR RECESSED LIGHT FIXTURES AND AIR TERMINALS OR SERVICES WEIGHING LESS THAN 56 POUNDS MAY BE SUPPORTED DIRECTLY ON THE RUNNERS OF A HEAVY DUTY GRID SYSTEM BUT, IN ADDITION, THEY MUST HAVE A MINIMUM OF TWO 12 GA. SLACK SAFETY WIRES ATTACHED TO THE FIXTURE AT DIAGONAL CORNERS AND ANCHORED TO THE STRUCTURE ABOVE. ALL 4'-0" x 4'-0" LIGHT FIXTURES MUST HAVE SLACK SAFETY WIRES AT EACH CORNER. ALL FLUSH OR RECESSED LIGHT FIXTURES AND AIR TERMINALS OR SERVICES WEIGHING 56 POUNDS OR MORE MUST BE INDEPENDENTLY SUPPORTED BY NOT LESS THAN FOUR TAUT 12 GA WIRES, EACH ATTACHED TO THE FIXTURE AND TO THE STRUCTURE ABOVE, REGARDLESS OF THE TYPE OF CEILING GRID SYSTEM USED. THE FOUR TAUT 12 GA. WIRES, INCLUDING THEIR ATTACHMENT TO THE STRUCTURE ABOVE, MUST BE CAPABLE OF SUPPORTING 4 TIMES THE WEIGHT OF THE UNIT.
11. SUPPORT SURFACE MOUNTED LIGHT FIXTURES BY AT LEAST TWO POSITIVE DEVICES WHICH SURROUND THE CEILING RUNNER AND WHICH ARE EACH SUPPORTED FROM THE STRUCTURE ABOVE BY A 12 GA. WIRE. SPRING CLIPS OR CLAMPS THAT CONNECT ONLY TO THE RUNNER ARE NOT ACCEPTABLE. PROVIDE ADDITIONAL SUPPORTS WHEN LIGHT FIXTURES ARE 8 FEET OR LONGER.
12. SUPPORT PENDANT MOUNTED LIGHT FIXTURES DIRECTLY FROM THE STRUCTURE ABOVE WITH HANGER WIRES OR CABLES PASSING THROUGH EACH PENDANT HANGER AND CAPABLE OF SUPPORTING 4 TIMES THE WEIGHT OF THE FIXTURE. SPECIAL DETAILS ARE NECESSARY FOR THIS CONDITION AT THE CEILING GRID.
13. CLASSIFICATION OF CEILING GRID. REFER TO SPECIFICATION FOR ADDITIONAL INFORMATION.
14. ALL CEILING SUPPORT MEMBERS, HANGER WIRES, SEISMIC SPLAY WIRES, SAFETY LIGHT WIRES AND ATTACHMENT OF WIRES TO STRUCTURE ABOVE ARE TO BE SUBMITTED IN DETAIL FORM FOR APPROVAL BY THE STRUCTURAL ENGINEER BEFORE INSTALLATION IS STARTED. CEILINGS SHALL CONFORM TO TITLE 24 -- TABLE 16A-O AND SECT. 2501A.5
15. WHEN DRILLED-IN CONCRETE ANCHORS OR SHOT-IN ARE USED IN REINFORCED CONCRETE FOR HANGER WIRES, 1 OUT OF 10 MUST BE FIELD TESTED FOR 200 POUNDS OF TENSION. WHEN DRILLED-IN CONCRETE ANCHORS ARE USED FOR BRACING WIRES, 1 OUT OF 2 MUST BE FIELD TESTED FOR 440 POUNDS IN TENSION. SHOT-IN ANCHORS IN CONCRETE ARE NOT PERMITTED FOR BRACING WIRES. IF ANY SHOT-IN OR DRILLED-IN ANCHOR FAILS, SEE SECTION 1923A.3.5 TITLE 24 NOTE: DRILLED-IN OR SHOT IN ANCHORS REQUIRE SPECIAL APPROVAL WHEN USED IN PRESTRESSED CONCRETE.

A1 GENERAL NOTES

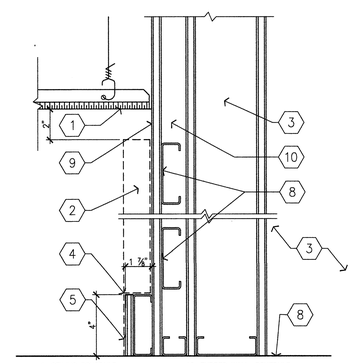

1. CEILING SCHEDULE
2. PROPOSED "DONOR" SIGNAGE
3. SCHEDULE PARTITION
4. METAL TRIM
5. SCHEDULE BASE
6. FINISH FLOOR
7. ELECTRICAL OR I.S. ROOM (SEE PLAN)
8. COORDINATE REQUIRED BLOCKING WITH SIGNAGE PACKAGE- REFER TO SHEET AGC 31.0
9. PAINT EXPOSED GYP. BD. WALL ABOVE DISPLAY PANEL TO FINISH SCHEDULE.
10. FURRED WALL, SCHEDULE PARTITION

A5 SECTION THRU DISPLAY "DONOR" WALL ADJACENT TO PUBLIC DINING ENTRANCE

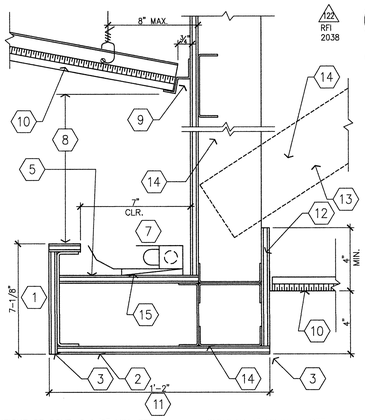

1. HEIGHT OF COVE, 6 1/2" MIN. SEE PLANS AND/OR SECTIONS FOR DIMENSION IF OTHERWISE.
2. HEIGHT ABOVE FINISHED FLOOR. SEE PLANS AND/OR SECTION FOR DIMENSIONS.
3. CORNER BEAD REQUIRED AT ALL OUTSIDE CORNERS.
4. INSIDE WIDTH OF COVE, 9" MIN. SEE CEILING PLAN FOR DIMENSION.
5. GYPSUM BOARD, 1/2" MINIMUM, MATCH TYPE AND THICKNESS USED ON ABUTTING PARTITION.
6. STRUCTURAL STUD, 2 1/2", 16 GAUGE MATCH STUD SPACING OF PARTITION.
7. FLUORESCENT LIGHT FIXTURE. STAGGER FIXTURES AND OVERLAP 4" MINIMUM. SEE ELECTRICAL DOCUMENTS FOR FIXTURE TYPE.
8. HEIGHT FROM LIGHT FIXTURE TO ABOVE CEILING, SEE REFLECTED CEILING PLAN.
9. METAL BRAKE CLOSURE PANEL. PAINT TO MATCH COVE AREA
10. SCHEDULED CEILING. SEE REFLECTED CEILING PLAN.
11. DIMENSION, SEE REFLECTED CEILING PLAN.
12. EDGE TRIM.
13. BRACE TO STRUCTURE, 48" MAX.
14. STRUCTURAL STUD 4", 16 GAUGE @ 16" O.C. TO DECK.
15. SHIM AS NEEDED.

A4 LIGHT COVE

RFI 2371
Calcs and details for congested corridors

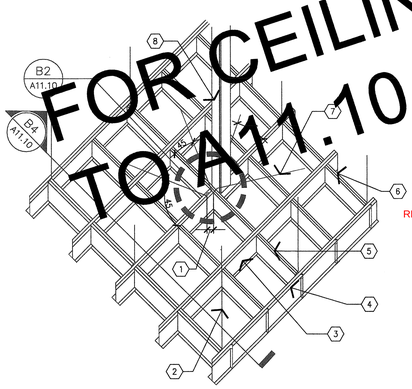

(A) T-BAR GRID SYSTEM

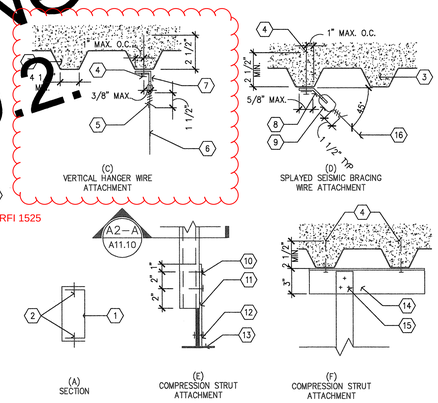

(C) VERTICAL HANGER WIRE ATTACHMENT
(D) SPLAYED SEISMIC BRACING WIRE ATTACHMENT
(A) SECTION
(E) COMPRESSION STRUT ATTACHMENT
(F) COMPRESSION STRUT ATTACHMENT

1. 2" MAX. DIST. TO POINT OF ATTACH FROM CROSS RUNNER.
2. #12 GA. VERT. HANGER WIRE @ 4'-0" EA. WAY W/ MIN. 3 TIGHT TURNS IN 1 1/2" BOTH ENDS OF WIRE.
3. MAIN RUNNER AT 2X2 CLG. TYP.
4. HEAVY DUTY MAIN RUNNER @ 4'-0" O.C.
5. HEAVY DUTY CROSS TEE @ 2'-0" O.C.
6. CROSS RUNNER.
7. #12 GA. BRACING WIRE W/ MIN 4 TIGHT TURNS IN 1 1/2" BOTH ENDS OF WIRE (TYP.)
8. COMPRESSION STRUTS: STEEL SECTION W/ L/R RATIO OF 200 MAX. ATTACH TO MAIN RUNNERS W/ 1/4" MACHINE BOLT AND TO STRUCTURE PER DETAIL 'F.' COMPRESSION STRUT SHALL NOT REPLACE HANGER WIRE.

A3 T-BAR GRID SYSTEM

1. (2) 2 1/2" DEEP LEG TRACK X 18 GA. (12' X 8' O.C. EA. WAY MAX) FOR 6'-6" LONG OR LESS USE (1) 2 1/2"X 18 GA. DEEP LEG TRACK.
2. #8 S.M. SCREW @18" O.C. EA. SIDE (6" FROM ENDS).
3. (E) METAL DECK.
4. HILTI .145 shank dia. powder driven fastener.
5. Not used.
6. #12 GA. VERTICAL HANGER WIRE.
7. CEILING CLIP HILTI OR EQUAL 2"X2" 16 GA.
8. STL STRAP 1"W X 2"L X 12 GA MIN.
9. 4 TIGHT TURNS.
10. (2) #12 SDST
11. 2" WIDEX14 GA. PLATE
12. 1/4" DIA. MACHINE BOLT
13. MAIN RUNNER
14. ∠3X2X14 GA.X1'6"
15. (3) #12 SCREW
16. #8 WIRE AT 16" S.F.

A2 CEILING DETAILS

RFI 1070
1" embedment for HILTI .15" dia shot pins 1 1/4" embedment for compression part attachment.

MUST BE FIELD TESTED FOR 440 POUNDS IN TENSION. SHOT-IN ANCHORS IN CONCRETE ARE NOT PERMITTED FOR BRACING WIRES. IF ANY SHOT-IN OR DRILLED-IN ANCHOR FAILS, SEE SECTION 1923A.3.5 TITLE 24.

ICBO #ESR-1289

*GYPSUM BOARD CEILING NOTE:
SIMILAR DETAIL APPLIES FOR GYPSUM BOARD CEILINGS.

FOR CEILING INFORMATION REFER TO A11.10.2.

FKP Architects

ARCHITECT OF RECORD
Paul C. Gloriod

LICENSED ARCHITECT PAUL C. GLORIOD No. C 20081 STATE OF CALIFORNIA

REVISIONS

122	10/20/10	CO #98
134	12/8/10	CO #109
172	02/23/11	CO #147

OSHPD/FDD-Field Review Tracking
Project
PAD
ACO 2-12-11
Architectural A AC D X Refer
Mechanical A AC D X Refer
Electrical A AC D X Refer
DSE / /
Structural A AC D X Refer
FLSO 3-24-11
Fire Life Safety A AC D X Refer

APPROVAL
Office of Statewide Health Planning & Development/FDD
REVIEWED IN ACCORDANCE WITH THE REQUIREMENTS OF 724, CCR
APPROVED
MAR 02 2011
CHANGE ORDER# CO #147
INSTRUCTION BULLETIN#
DEFERRED APPROVAL#
ADDENDUM

PROJECT NAME
CHILDREN'S HOSPITAL OF ORANGE COUNTY
455 S. Main St.
Orange, CA 92868-3874

TOWER II

CHOC HOSPITAL

PROJECT NUMBER
12011.00
Increment #7

OSHPD - PROJECT NUMBER
IL 072072-30

ISSUE
OSHPD PERMIT

DATE
01/27/2010

SCALE
N.T.S.

DRAWING TITLE
CEILING DETAILS / MISCELLANEOUS

DRAWING NUMBER
A11.10

N:\06XXX\06102 CHOC TOWER 2 SHELL BUILDING\FKP CONTRACTED PROJECTS\PROJECT INCREMENTS\INCR. #07_TENANT IMPROVEMENTS\OSHPD PERMIT (CONSTRUCTION DOCUMENTS)\100602_CO#_____\A11.10 CEILING DETAILS - MISCELLANEOUS.DWG