© 2009 FKP Architects, Inc. All rights reserved. No part of this document may be reproduced or utilized in any form without prior written authorization of FKP Architects, Inc.

B6 UL DESIGN HW-D-0088
NTS

XHBN.HW-D-0088 - Joint Systems — Page 1 of 5

ONLINE CERTIFICATIONS DIRECTORY

XHBN.HW-D-0088
Joint Systems

Page Bottom

Design/System/Construction/Assembly Usage Disclaimer

- Authorities Having Jurisdiction should be consulted in all cases as to the particular requirements covering the installation and use of UL Listed or Classified products, equipment, system, devices, and materials.
- Authorities Having Jurisdiction should be consulted before construction.
- Fire resistance assemblies and products are developed by the design submitter and have been investigated by UL for compliance with applicable requirements. The published information cannot always address every construction nuance encountered in the field.
- When field issues arise, it is recommended the first contact for assistance be the technical service staff provided by the product manufacturer noted for the design. Users of fire resistance assemblies are advised to consult the general Guide Information for each product category and each group of assemblies. The Guide Information includes specifics concerning alternate materials and alternate methods of construction.
- Only products which bear UL's Mark are considered as Classified, Listed, or Recognized.

Joint Systems

See General Information for Joint Systems

System No. HW-D-0088

May 21, 2009

Assembly Ratings — 1 and 2 Hr (See Item 2)

Nominal Joint Width — 1 in.

L Rating At Ambient — Less Than 1 CFM/Lin Ft

L Rating At 400°F — Less Than 1 CFM/Lin Ft

Class II Movement Capabilities — 19% Compression and Extension

XHBN.HW-D-0088 - Joint Systems — Page 2 of 5

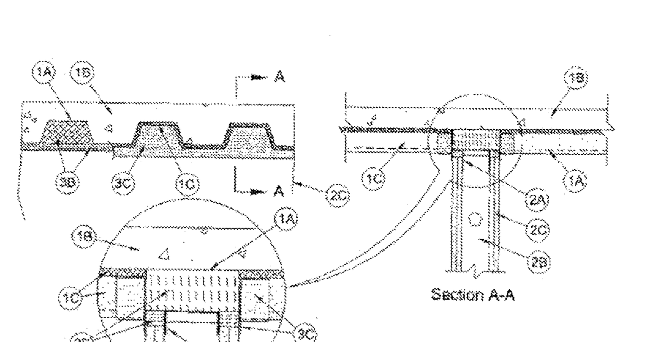

1. **Floor Assembly** — The fire-rated fluted steel deck/concrete floor assembly shall be constructed of the materials and in the manner described in the individual D700 or D800 Series Floor-Ceiling Design in the UL Fire Resistance Directory and shall include the following construction features:

A. **Steel Floor and Form Units*** — Max 3 in. (76 mm) deep galv steel fluted floor units.

B. **Concrete** — Min 2-1/2 in. (64 mm) thick reinforced concrete, as measured from the top plane of the floor units.

C. **Spray-Applied Fire Resistive Material*** — After installation of the ceiling runner (Item 2A) or deflection track (Item 3A, if used), steel floor units to be sprayed with a min 5/16 in. (8 mm) to max 11/16 in. (18 mm) thickness of material in accordance with the specifications in the individual D700 or D800 Series Design. Material is to be excluded from the steel deck in the area immediately above the wall as well as from the flanges of the ceiling runner or deflection track.

ISOLATEK INTERNATIONAL — Type 300

W R GRACE & CO - CONN — Type MK-6/HY

1A. **Roof Assembly** — (Not Shown) — As an alternate to the floor assembly (Item 1), a fire rated fluted steel deck roof assembly may be used. The roof assembly shall be constructed of the materials and in the manner described in the individual P700 or P800 Series Roof-Ceiling Design in the UL Fire Resistance Directory. The hourly fire rating of the roof assembly shall be equal to or greater than the hourly fire rating of the wall assembly. The roof assembly shall include the following construction features:

A. **Steel Roof Deck** — Max 3 in. (76 mm) deep galv steel fluted roof deck.

B. **Roof Insulation — Mineral and Fiber Board*** — Min 3/4 in. (19 mm) thick boards applied in one or more layers directly over steel roof deck or over gypsum board sheathing laid atop steel roof deck.

C. **Roof Covering*** — Hot-mopped or cold-application materials compatible with mineral and fiber board insulation.

D. **Spray-Applied Fire Resistive Material*** — After installation of the ceiling runner (Item 2A) or deflection track (Item 3A, if used), steel roof deck to be sprayed with a max 3/4 in. (19 mm) thickness of spray applied fire resistive material as specified in the individual P700 or P800 Series Roof-Ceiling design. Material is to be excluded from the steel deck in the area immediately above the wall as well as from the flanges of the ceiling runner or deflection track.

ISOLATEK INTERNATIONAL — Type 300

http://database.ul.com/cgi-bin/XYV/template/LISEXT/1FRAME/showpage.html?name=... 11/15/2009

XHBN.HW-D-0088 - Joint Systems — Page 3 of 5

W R GRACE & CO - CONN — Type MK-6/HY

2. **Wall Assembly** — The 1 or 2 hr fire-rated gypsum board/stud wall assembly shall be constructed of the materials and in the manner described in the individual U400 or V400 Series Wall and Partition Design in the UL Fire Resistance Directory and shall include the following construction features:

A. **Steel Floor and Ceiling Runners** — Floor and ceiling runners of wall assembly shall consist of galv steel channels sized to accommodate steel studs. Ceiling runner to be provided with min 1-1/4 in. (32 mm) to max 2 in. (51 mm) flanges. When deflection channel (Item 3A) is used, flange height of ceiling runner is to be equal to or greater than flange height of deflection channel and the ceiling runner is to nest within the deflection channel with a 1/2 in. (13 mm) to 3/4 in. (19 mm) gap maintained between the top of the ceiling runner and the top of the deflection channel. When deflection channel is not used, ceiling runner installed perpendicular to direction of fluted steel deck prior to the application of spray-applied fire resistive material and secured to valleys with steel masonry anchors or welds spaced max 24 in. (610 mm) OC.

A1. **Light Gauge Framing* — Slotted Ceiling Runner** — As an alternate to the ceiling runner in Item 2A, ceiling runner to consist of galv steel channel with slotted flanges sized to accommodate steel studs (Items 2B). Slotted ceiling runner installed perpendicular to direction of fluted steel deck prior to the application of spray-applied fire resistive material and secured to valleys with steel masonry anchors spaced max 24 in. (610 mm) OC. When slotted ceiling runner is used, deflection channel (Item 3A) shall not be used.

BRADY CONSTRUCTION INNOVATIONS INC,

DBA SLIPTRACK SYSTEMS — SLP-TRK

CALIFORNIA EXPANDED METAL PRODUCTS CO — CST

CLARKWESTERN BUILDING SYSTEMS INC — Type SLT, SLT-H

METAL-LITE INC — The System

SCAFCO STEEL STUD MANUFACTURING CO

STEELER INC — Steeler Slotted Ceiling Runner

A2. **Light Gauge Framing* — Clipped Ceiling Runner** — As an alternate to the ceiling runner in Items 2A and 2A1, clipped runner to consist of galv steel channel with clips preformed in track flanges which positively engage the inside flange of the steel studs (Item 2B). Track sized to accommodate steel studs (Item 2B). Track flanges to be min 2-1/2 in. (64 mm). Clipped ceiling runner installed perpendicular to direction of fluted steel deck prior to the application of spray-applied fire resistive material and secured to valleys with steel masonry anchors spaced max 24 in. (610 mm) OC. When clipped ceiling runner is used, deflection channel (Item 3A) shall not be used.

TOTAL STEEL SOLUTIONS L L C — Snap Trak

A3. **Light Gauge Framing* - Notched Ceiling Runner** — As an alternate to the ceiling runners in Items 2A through 2A2, notched ceiling runners to consist of C-shaped galv steel channel with notched return flanges sized to accommodate steel studs (Item 2B). Notched ceiling runner installed perpendicular to direction of fluted steel floor deck prior to the application of spray-applied fire resistive material and secured to valleys with steel masonry anchors spaced max 24 in. OC. When notched ceiling runner is used, deflection channel (Item 3A) shall not be used.

OLMAR SUPPLY INC — Type SCR

B. **Studs** — Steel studs to be min 3-1/2 in. (89 mm) wide. Studs cut 1/2 in. (13 mm) to 3/4 in. (19 mm) less in length than assembly height with bottom nesting in and secured to floor runner. When slotted ceiling runner (Item 2A1) is used, steel studs secured to slotted ceiling runner with No. 8 by 1/2 in. (13 mm) long water head steel screws at midheight of slot on each side of wall. When deflection channel (Item 3A) is used, steel studs attached to ceiling runner with sheet metal screws located 1/2 in. (13 mm) below the bottom of the deflection channel. When deflection channel is not used, studs to nest in ceiling runner without attachment. Stud spacing not to exceed 24 in. (610 mm) OC.

http://database.ul.com/cgi-bin/XYV/template/LISEXT/1FRAME/showpage.html?name=... 11/15/2009

XHBN.HW-D-0088 - Joint Systems — Page 4 of 5

B1. **Light Gauge Framing* —Slotted Studs** — Slotted steel stud to be used in conjunction with **Light Gauge Framing* — Floor and Ceiling Runners** (Item 2A1). Slotted steel studs to be min 3-1/2 in. (89 mm) wide. Slotted steel studs cut 1/2 in. to 3/4 in. (13 to 19 mm) less in length than assembly height with bottom nesting in and secured to both ceiling and floor runners. Ceiling runner secured to preformed slot within steel stud by means of No. 10 by 3/4 in. (19 mm) long low profile head steel screw. Floor runner attached to bottom of steel stud by means of No. 8 by 1/2 in. (13 mm) long pan head steel screw. Slotted steel stud spacing not to exceed 24 in. (610 mm) OC.

STEELER INC — Steeler Slotted Stud

C. **Gypsum Board*** — Gypsum board sheets installed to a min total 5/8 in. (16 mm) or 1-1/4 in. (32 mm) thickness on each side of wall for 1 and 2 hr fire rated assemblies, respectively. Wall to be constructed in the individual U400 Series Design in the UL Fire Resistance Directory, except that a max 1 in. (25 mm) gap shall be maintained between the top of the gypsum board and the bottom surface of the steel floor or roof deck. The screws attaching the gypsum board to the studs along the top of the wall shall be located 1 in. (25 mm) below the bottom of the ceiling runner. No gypsum board attachment screws shall be driven into the ceiling runner or into the optional deflection channel.

The hourly fire rating of the joint system is equal to the hourly fire rating of the wall.

3. **Joint System — Max separation between bottom of floor or roof deck and top of gypsum board (at time of installation of joint system) is 1 in. (25 mm). The joint system is designed to accommodate a max 18.75 percent compression or extension from its installed width.** The joint system shall consist of forming and fill materials, with or without a deflection channel (Item 2A), as follows:

A. **Deflection Channel** — (Optional, Not Shown) — Max 2 in. (51 mm) deep min 24 gauge galv steel channel sized to accommodate ceiling runner (Item 2A). Deflection channel installed perpendicular to direction of fluted steel deck prior to the application of spray-applied fire resistive material and secured to steel floor or roof deck valleys with steel masonry anchors fasteners or welds spaced max 24 in. (610 mm) OC. The ceiling runner is installed within the deflection channel to maintain a 1/2 in. (13 mm) to 3/4 in. (19 mm) gap between the top of the ceiling runner and the top of the deflection channel. The ceiling runner nests inside the deflection channel without attachment.

B. **Forming Material*** — Min 5-5/8 in. (143 mm) or 7 in. (178 mm) thickness of 4 pcf (64 kg/m³) mineral wool batt insulation for 1 and 2 hr fire rated assemblies, respectively, cut to the shape of the fluted deck and installed into the flutes of the steel floor or roof deck between the top of the deflection channel and the steel floor or roof deck. The mineral wool batt insulation is to be compressed min 14.3 percent in thickness such that it is flush with the gypsum board surface on both sides of the wall. Additional sections of mineral wool batt insulation are compressed 50 percent in thickness and installed cut edge first to completely fill the gap above the top of the gypsum board. The forming material shall be installed flush with both surfaces of wall.

FIBREX INSULATIONS INC — FBX Safing Insulation

IIG MINWOOL L L C — MinWool-1200 Safing

ROCK WOOL MANUFACTURING CO — Delta Board

ROXUL ASIA SDN BHD — SAFE

ROXUL INC — SAFE

THERMAFIBER INC — Type SAF

C. **Fill, Void or Cavity Material*-Sealant** — Min 1/8 in. (3.2 mm) wet thickness or 1/16 in. (1.6 mm) dry thickness of fill material spray applied on each side of the wall in the flutes of the steel floor or roof deck and between the top of the wall and the bottom of the steel floor or roof deck and overlap a min 1/2 in. (13 mm) onto gypsum board and a min 2 in. (51 mm) onto the spray applied material on both sides of wall.

SPECIFIED TECHNOLOGIES INC — SpecSeal AS200 Elastomeric Spray

*Bearing the UL Classification Mark

http://database.ul.com/cgi-bin/XYV/template/LISEXT/1FRAME/showpage.html?name=... 11/15/2009

XHBN.HW-D-0088 - Joint Systems — Page 5 of 5

Last Updated on 2009-05-21

Questions? Notice of Disclaimer Page Top

Copyright © 2009 Underwriters Laboratories Inc.®

The appearance of a company's name or product in this database does not in itself assure that products so identified have been manufactured under UL's Follow-Up Service. Only those products bearing the UL Mark should be considered to be Listed and covered under UL's Follow-Up Service. Always look for the Mark on the product.

UL permits the reproduction of the material contained in the Online Certification Directory subject to the following conditions: 1. The Guide Information, Designs and/or Listings (files) must be presented in their entirety and in a non-misleading manner, without any manipulation of the data (or drawings). 2. The statement "Reprinted from the Online Certifications Directory with permission from Underwriters Laboratories Inc." must appear adjacent to the extracted material. In addition, the reprinted material must include a copyright notice in the following format: "Copyright © 2009 Underwriters Laboratories Inc.®"

An independent organization working for a safer world with integrity, precision and knowledge

http://database.ul.com/cgi-bin/XYV/template/LISEXT/1FRAME/showpage.html?name=... 11/15/2009

EJ NS087102B - 12" x 3" x 1/2" Steel C Channel penetrating through Gypsum wall/ Shaftwall assembly — RFI 3563

EJ NS09510313 - Gypsum Wall/ Shaftwall Terminating at curtain wall assemblies — RFI 3564

EJ NS063101L - Interior rated wall assembly terminating against building exterior wall assembly

EJ NS063101B Rev 1 - Interior rated wall assembly terminating at exterior wall assembly — RFI 3657

RFI 2538
EJNS312004B- Cantilevered beam from shaft wall with steel angle

RFI 2335.1
EJNS25700166- Shaftwall cantilevered from beam

RFI 2212
UL HW-D 0617

RFI 2181
EJNS174004L-REV 1 6" stud penetrating one side of wall assembly

A4 UL DESIGN HW-D-0099
NTS

XHBN.HW-D-0099 - Joint Systems — Page 1 of 5

ONLINE CERTIFICATIONS DIRECTORY

XHBN.HW-D-0099
Joint Systems

Page Bottom

Design/System/Construction/Assembly Usage Disclaimer

- Authorities Having Jurisdiction should be consulted in all cases as to the particular requirements covering the installation and use of UL Listed or Classified products, equipment, system, devices, and materials.
- Authorities Having Jurisdiction should be consulted before construction.
- Fire resistance assemblies and products are developed by the design submitter and have been investigated by UL for compliance with applicable requirements. The published information cannot always address every construction nuance encountered in the field.
- When field issues arise, it is recommended the first contact for assistance be the technical service staff provided by the product manufacturer noted for the design. Users of fire resistance assemblies are advised to consult the general Guide Information for each product category and each group of assemblies. The Guide Information includes specifics concerning alternate materials and alternate methods of construction.
- Only products which bear UL's Mark are considered as Classified, Listed, or Recognized.

Joint Systems

See General Information for Joint Systems

System No. HW-D-0099

August 04, 2009

Assembly Ratings — 1 and 2 Hr (See Item 1)

Nominal Joint Width — 3/4 and 1 In. (See Item 3)

L Rating At Ambient — Less Than 1 CFM/Lin Ft

L Rating At 400°F — Less Than 1 CFM/Lin Ft

Class II Movement Capabilities — 19% and 100% Compression or Extension (See Item 3)

XHBN.HW-D-0099 - Joint Systems — Page 2 of 5

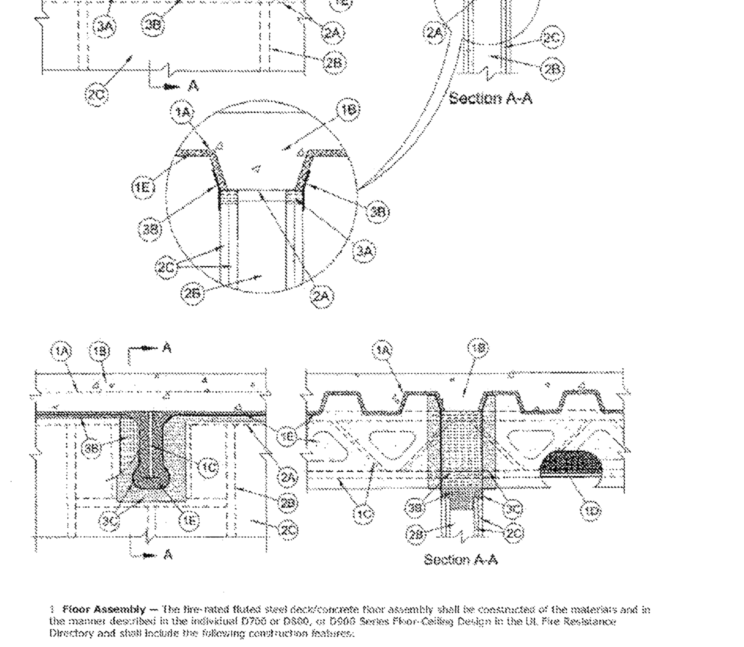

1. **Floor Assembly** — The fire-rated fluted steel deck/concrete floor assembly shall be constructed of the materials and in the manner described in the individual D700 or D800, or D900 Series Floor-Ceiling Design in the UL Fire Resistance Directory and shall include the following construction features:

A. **Steel Floor and Floor Units*** — Max 3 in. (76 mm) deep galv steel fluted floor units.

B. **Concrete** — Min 2-1/2 in. (64 mm) thick reinforced concrete, as measured from the top plane of the floor units.

C. **Structural Steel Support** — (Optional) — Steel beam or open-web steel joist, as specified in the individual D700 or D800 Series Floor-Ceiling Design, used to support steel floor units. Structural steel support oriented perpendicular to wall assembly.

D. **Steel Lath** — Where open-web steel joists pass through the fire rated wall, 3/8 in. (10 mm) diamond mesh expanded steel lath having a nom weight of 1.7 to 3.4 lb per sq yd (0.9 to 1.8 kg/m²) shall be secured to one side of each joist with steel tie wire and the lath shall be fully covered with spray applied fire resistive material with no min thickness requirement.

E. **Spray-Applied Fire Resistive Material*** — After installation of the ceiling runner (Item 2A) or

http://database.ul.com/cgi-bin/XYV/template/LISEXT/1FRAME/showpage.html?name=... 11/15/2009

XHBN.HW-D-0099 - Joint Systems — Page 3 of 5

deflection track (Item 3A, if used), steel floor units and structural steel supports to be sprayed with the thickness of material specified in the individual D700, D800, or D900 Series Design. Material is to be excluded from the flanges of the ceiling runner or deflection track. For D900 Series Designs structural steel supports, steel furring and steel lath only to be sprayed in accordance with the specifications in the individual D900 Series Design.

ISOLATEK INTERNATIONAL — Type 300 or Type II

SOUTHWEST FIREPROOFING PRODUCTS CO — Type 5, Type 5GP

W R GRACE & CO - CONN — Type MK-6/HY, MK-6/HYES, MK-6S and RG.

2. **Wall Assembly** — The 1 or 2 hr fire-rated gypsum board/stud wall assembly shall be constructed of the materials and in the manner described in the individual U400 or V400 Series Wall and Partition Design in the UL Fire Resistance Directory and shall include the following construction features:

A. **Steel Floor and Ceiling Runners** — Floor and ceiling runners of wall assembly shall consist of galv steel channels sized to accommodate steel studs (Item 2B). Ceiling runner to be provided with min 1-1/4 in. (32 mm) to max 2 in. (51 mm) flanges. When deflection channel (Item 3A) is used, flange height of ceiling runner is to be equal to or greater than flange height of deflection channel and the ceiling runner is to nest within the deflection channel with a 1/2 in. (13 mm) to 3/4 in. (19 mm) gap maintained between the top of the ceiling runner and the top of the deflection channel. When deflection channel is not used, ceiling runner is secured to steel floor units prior to the application of the sprayed-applied fire resistive material with steel masonry anchors or welds spaced max 24 in. (610 mm) OC. Ceiling runner or deflection channel to be centered beneath and parallel with valley of steel floor unit. A clearance of 1 in. (25 mm) shall be maintained between the end of the ceiling runner or deflection channel and the spray applied fire resistive material on the structural steel support members.

A1. **Light Gauge Framing* — Slotted Ceiling Runner** — As an alternate to the ceiling runner in Item 2A, ceiling runner to consist of galv steel channel with slotted flanges sized to accommodate steel studs (Item 2B). Ceiling runner installed parallel to direction of fluted steel deck, centered beneath valley, prior to the application of the sprayed-applied fire resistive material and secured with steel masonry anchors spaced max 24 in. (610 mm) OC. When slotted ceiling runner is used, deflection channel (Item 3A) shall not be used.

BRADY CONSTRUCTION INNOVATIONS INC,

DBA SLIPTRACK SYSTEMS — SLP-TRK

CALIFORNIA EXPANDED METAL PRODUCTS CO — CST

CLARKWESTERN BUILDING SYSTEMS INC — Type SLT, SLT-H

METAL-LITE INC — The System

SCAFCO STEEL STUD MANUFACTURING CO

STEELER INC — Steeler Slotted Ceiling Runner

A2. **Light Gauge Framing* — Clipped Ceiling Runner** — As an alternate to the ceiling runner in Items 2A and 2A1, clipped runner to consist of galv steel channel with clips preformed in track flanges which positively engage the inside flange of the steel studs (Item 2B). Track sized to accommodate steel studs (Item 2B). Track flanges to be min 2-1/2 in. (64 mm). Clipped ceiling runner installed parallel to direction of fluted steel deck, centered on valley, prior to the application of the sprayed-applied fire resistive material and secured with steel masonry anchors spaced max 24 in. (610 mm) OC. When clipped ceiling runner is used, deflection channel (Item 3A) shall not be used.

TOTAL STEEL SOLUTIONS L L C — Snap Trak

A3. **Light Gauge Framing* - Notched Ceiling Runner** — As an alternate to the ceiling runners in Items 2A through 2A2, notched ceiling runners to consist of C-shaped galv steel channel with notched return flanges sized to accommodate steel studs (Item 2B). Notched ceiling runner installed parallel to direction of fluted steel deck, centered beneath valley, prior to the application of

http://database.ul.com/cgi-bin/XYV/template/LISEXT/1FRAME/showpage.html?name=... 11/15/2009

XHBN.HW-D-0099 - Joint Systems — Page 4 of 5

the sprayed-applied fire resistive material and secured with steel masonry anchors spaced max 24 in. OC. When notched ceiling runner is used, deflection channel (Item 3A) shall not be used.

OLMAR SUPPLY INC — Type SCR

B. **Studs** — Steel studs to be min 3-1/2 in. (89 mm) wide. Studs cut 1/2 in. to 3/4 in. (19 to 25 mm) less in length than assembly height with bottom nesting in and secured to floor runner. When slotted ceiling runner (Item 2A1) is used, steel studs secured to slotted ceiling runner with No. 8 by 1/2 (13 mm) long wafer head steel screws at midheight of slot on each side of wall. When deflection channel (Item 3A) is used, steel studs attached to ceiling runner (Item 2A) with steel metal screws located 1/2 in. (13 mm) below the bottom of the deflection channel. When deflection channel is not used, studs to nest in ceiling runner without attachment. A framed opening shall be constructed around each structural steel support member. A min clearance of 1 in. (25 mm) to a maximum clearance of 3 in. (76 mm) shall be maintained between the framing and the spray applied fire resistive material on the two sides of the structural support member. The clearance between the framing and the spray applied fire resistive material on the bottom of the structural steel support member shall be max 1 in. (25 mm).

B1. **Light Gauge Framing* —Slotted Studs** — Slotted steel stud to be used in conjunction with **Light Gauge Framing* —Floor and Ceiling Runners** (Item 2A1). Slotted steel studs to be min 3-1/2 in. (89 mm) wide. Slotted steel studs cut 1/2 in. to 3/4 in. (13 to 19 mm) less in length than assembly height with bottom nesting in and secured to both ceiling and floor runners. Ceiling runner secured to preformed slot within steel stud by means of No. 10 by 3/4 in. (19 mm) long low profile head steel screw. Floor runner attached to bottom of steel stud by means of No. 8 by 1/2 in. (13 mm) long pan head steel screw. Slotted steel stud spacing not to exceed 24 in. (610 mm) OC.

STEELER INC — Steeler Slotted Stud

C. **Gypsum Board*** — Gypsum board sheets installed to a min total 5/8 in. (16 mm) or 1-1/4 in. (32 mm) thickness on each side of wall for 1 and 2 hr fire rated assemblies, respectively. Wall to be constructed in the individual U400 or V400 Series Design in the UL Fire Resistance Directory, except that a max 1 in. (25 mm) gap shall be maintained between the top of the gypsum board and the bottom plane of the steel floor units and between the top edge of the gypsum board and the spray applied fire resistive material on the structural steel support member. The screws attaching the gypsum board to the studs along the top of the wall shall be located 1 in. (25 mm) below the bottom of the ceiling runner. No gypsum board attachment screws shall be driven into the ceiling runner or into the optional deflection channel.

The hourly fire rating of the joint system is equal to the hourly fire rating of the wall.

3. Joint System — **Max separation between bottom plane of steel floor unit and top of gypsum board (at time of installation of joint system) is 3/4 or 1 in. (19 or 25 mm). Max separation between spray applied fire resistive material on bottom of structural support member and framed opening in top of wall is 3/4 or 1 in. (17 or 25 mm). The joint system is designed to accommodate a max 18.75 or 100 percent compression or extension from its installed width as measured between bottom plane of steel floor unit and top of gypsum board. When Item 3B1 is used in lieu of the strips of mineral wool described in Item 3B and Items 1C, 1D, and 1E are omitted , the maximum joint width is 3/4 in. (19 mm) and the movement capabilities are 100% compression or extension.** The joint system shall consist of forming and fill materials, with or without a deflection channel (Item 3A), as follows:

A. **Deflection Channel** — (Optional, Not Shown) — Max 2 in. (51 mm) deep min 24 gauge galv steel channel sized to accommodate ceiling runner (Item 2A). Deflection channel installed parallel to direction of fluted steel deck, centered beneath valley, prior to the application of the sprayed-applied fire resistive material and secured with steel masonry anchors or welds spaced max 24 in. (610 mm) OC. The ceiling runner (Item 2A) is installed within the deflection channel to maintain a 1/2 in. to 3/4 in. (13 to 19 mm) gap between the top of the ceiling runner and the top of the deflection channel. A clearance of 1 in. (25 mm) shall be maintained between the end of the deflection channel and the spray applied fire resistive material on the structural steel support members. The ceiling runner nests inside the deflection channel without attachment.

B. **Forming Material*** — Nom 4 pcf (64 kg/m³) mineral wool batt insulation cut to a length approx 1 in. (25 mm) longer than overall thickness of wall and inserted edge first into the spaces between the spray applied fire resistive material on the structural steel member and the framed notch at the top of the wall. The thickness of forming material shall be sufficient to attain a min compression of 20 percent between the sides of the framed notch and the protected structural steel member and a min compression of 33 percent between the bottom of the framed notch and the bottom of the protected structural steel member. The mineral wool batt insulation is to be additionally compressed in the length direction such that it is flush with the gypsum board surface on both sides of the wall. Additional sections of mineral wool batt insulation are compressed 50 percent in thickness and are installed cut edge first to completely fill the gap above the top of the gypsum board. The forming material shall be installed flush with both surfaces of wall.

FIBREX INSULATIONS INC — FBX Safing Insulation

XHBN.HW-D-0099 - Joint Systems — Page 5 of 5

IIG MINWOOL L L C — MinWool-1200 Safing

ROCK WOOL MANUFACTURING CO — Delta Board

ROXUL ASIA SDN BHD — SAFE

ROXUL INC — SAFE

THERMAFIBER INC — Type SAF

B1. **Forming Material*** — (Not Shown) - As an option to the strips of mineral wool specified under Item 3B, nom 3/16 in. (4.8 mm) thick by 4 in. (102 mm) high joint forming material profile installed on both sides of the wall assembly. Profile installed by first marking a line across the top of the wall 3 in. (76 mm) below the bottom plane of the steel floor or roof deck valleys. Joint profile material positioned with its top edge against both the underside of the spray-applied fire-resistive material with its bottom edge on the line scribed on the wall assembly. Bottom of the joint profile attached to gypsum board with nom 1/2 in. (13 mm) long steel staples spaced not greater than 8 in. (203 mm) OC. Adjoining lengths of profile to overlap approx 3/4 in. (19 mm) at shiplapped ends.

SPECIFIED TECHNOLOGIES INC — SpecSeal Speed Flex Joint Profile

C. **Fill, Void or Cavity Material* — Sealant** — Min 1/8 in. (3.2 mm) wet thickness or 1/16 in. (1.6 mm) dry thickness of fill material spray applied over the forming material on each side of the wall. Fill material to overlap a min of 1/2 in. (13 mm) onto the gypsum board and a min 2 in. (51 mm) onto the spray applied material on the steel floor unit and on the structural steel support member on both sides of wall. Overlap onto the steel floor units may be decreased to 1/2 in. (13 mm) when spray applied material is omitted.

SPECIFIED TECHNOLOGIES INC — SpecSeal AS200 Elastomeric Spray

*Bearing the UL Classification Mark

Last Updated on 2009-08-04

Questions? Notice of Disclaimer Page Top

Copyright © 2009 Underwriters Laboratories Inc.®

The appearance of a company's name or product in this database does not in itself assure that products so identified have been manufactured under UL's Follow-Up Service. Only those products bearing the UL Mark should be considered to be Listed and covered under UL's Follow-Up Service. Always look for the Mark on the product.

UL permits the reproduction of the material contained in the Online Certification Directory subject to the following conditions: 1. The Guide Information, Designs and/or Listings (files) must be presented in their entirety and in a non-misleading manner, without any manipulation of the data (or drawings). 2. The statement "Reprinted from the Online Certifications Directory with permission from Underwriters Laboratories Inc." must appear adjacent to the extracted material. In addition, the reprinted material must include a copyright notice in the following format: "Copyright © 2009 Underwriters Laboratories Inc.®"

An independent organization working for a safer world with integrity, precision and knowledge

http://database.ul.com/cgi-bin/XYV/template/LISEXT/1FRAME/showpage.html?name=... 11/15/2009

D3 UL DESIGN HW-D-0044
NTS

XHBN.HW-D-0044 - Joint Systems — Page 1 of 4

ONLINE CERTIFICATIONS DIRECTORY

XHBN.HW-D-0044
Joint Systems

Page Bottom

Design/System/Construction/Assembly Usage Disclaimer

- Authorities Having Jurisdiction should be consulted in all cases as to the particular requirements covering the installation and use of UL Listed or Classified products, equipment, system, devices, and materials.
- Authorities Having Jurisdiction should be consulted before construction.
- Fire resistance assemblies and products are developed by the design submitter and have been investigated by UL for compliance with applicable requirements. The published information cannot always address every construction nuance encountered in the field.
- When field issues arise, it is recommended the first contact for assistance be the technical service staff provided by the product manufacturer noted for the design. Users of fire resistance assemblies are advised to consult the general Guide Information for each product category and each group of assemblies. The Guide Information includes specifics concerning alternate materials and alternate methods of construction.
- Only products which bear UL's Mark are considered as Classified, Listed, or Recognized.

Joint Systems

See General Information for Joint Systems

System No. HW-D-0044

April 29, 2009

Assembly Ratings — 1, 2, 3 and 4 Hr (See Item 2)

Nominal Joint Widths — 1 and 2 In. (See Item 3)

L Rating At Ambient — Less Than 1 CFM/Lin Ft

L Rating At 400°F — Less Than 1 CFM/Lin Ft

Class II Movement Capabilities — 19% and 25% Compression and Extension (See Item 3)

XHBN.HW-D-0044 - Joint Systems — Page 2 of 4

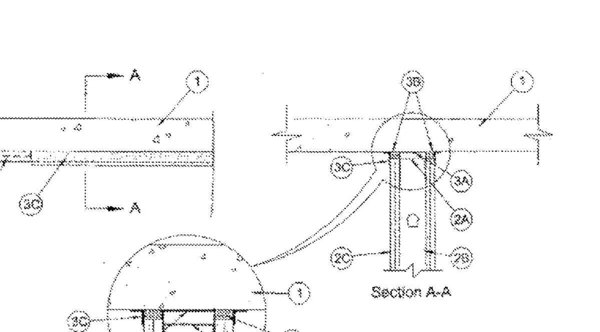

1. **Floor Assembly** — Min 4-1/2 in. (114 mm) thick steel-reinforced lightweight or normal weight (100-150 pcf or 1600-2400 kg/m³) structural concrete.

2. **Wall Assembly** — 1, 2, 3 or 4 hr fire rated gypsum board/stud wall assembly shall be constructed of the materials and in the manner described in the individual U400 or V400 Series Wall and Partition Design in the UL Fire Resistance Directory and shall include the following construction features:

A. **Steel Floor and Ceiling Runners** — Floor and ceiling runners of wall assembly shall consist of galv steel channels sized to accommodate steel studs (Item 2B). When deflection channel (Item 3A) is used, flange height of ceiling runner is to be equal to or greater than flange height of deflection channel and the ceiling runner is to nest within the deflection channel with a 3/4 to 1 in. (19 to 25 mm) gap maintained between the top of the ceiling runner and the top of the deflection channel. When deflection channel is not used, flange height of ceiling runner shall be min 3/4 in. (19 mm) greater than nom joint width. Ceiling runner is secured to concrete floor slab with steel masonry anchors spaced max 24 in. (610 mm) OC.

A1. **Light Gauge Framing* - Slotted Ceiling Runner** — When nom joint width is less than or equal to 1-3/4 in. (45 mm), slotted ceiling runner may be used as an alternate to the ceiling runner in Item 2A. Slotted ceiling runner to consist of galv steel channel with slotted flanges sized to accommodate steel studs (Item 2B). Ceiling runner secured to concrete floor slab with steel masonry anchors spaced max 24 in. (610 mm) OC. When slotted ceiling runner is used, deflection channel (Item 3A) shall not be used.

BRADY CONSTRUCTION INNOVATIONS INC,

DBA SLIPTRACK SYSTEMS — SLP-TRK

CALIFORNIA EXPANDED METAL PRODUCTS CO — CST

CLARKWESTERN BUILDING SYSTEMS INC — Type SLT, SLT-H

METAL-LITE INC — The System

SCAFCO STEEL STUD MANUFACTURING CO

A2. **Light Gauge Framing* - Vertical Deflection Ceiling Runner** — When nom joint width is less than or equal to 1 in. (25 mm), vertical deflection ceiling runner may be used as an alternate to the ceiling runner in Items 2A and 2A1. Vertical deflection ceiling runner to consist of galv steel channel with slotted vertical deflection clips mechanically fastened within runner. Slotted clips, provided with step bushings, for permanent fastening of steel studs. Vertical deflection ceiling

XHBN.HW-D-0044 - Joint Systems — Page 3 of 4

runner secured to concrete floor slab with steel masonry anchors spaced max 24 in. (610 mm) OC. When vertical deflection ceiling runner is used, deflection channel (Item 4A) shall not be used.

THE STEEL NETWORK INC — VertiTrack VTD362, VTD400, VTD600 and VTD800

A3. **Light Gauge Framing* - Clipped Ceiling Runner** — As an alternate to the ceiling runner in Items 2A and 2A1, clipped runner to consist of galv steel channel with clips preformed in track flanges which positively engage the inside flange of the steel studs (Item 2B). Track sized to accommodate steel studs (Item 2B). Track flanges to be min 2-3/4 in. (70 mm). Clipped ceiling runner secured to concrete floor slab with steel masonry anchors spaced max 12 in. (305 mm) OC. When clipped ceiling runner is used, deflection channel (Item 3A) shall not be used.

TOTAL STEEL SOLUTIONS L L C — Snap Trak

A4. **Light Gauge Framing*- Notched Ceiling Runner** — As an alternate to the ceiling runners in Items 2A through 2A3, notched ceiling runners to consist of C-shaped galv steel channel with notched return flanges sized to accommodate steel studs (Item 2B). Notched ceiling runner secured to concrete floor slab with steel masonry anchors spaced max 24 in. (610 mm) OC. When notched ceiling runner is used, deflection channel (Item 3A) shall not be used.

OLMAR SUPPLY INC — Type SCR

A5. **Light Gauge Framing* —Vertical Deflection Clip*** — (Optional) Steel clips can be used in conjunction with steel studs (Item 2B), ceiling runner (Item 2A) or deflection channel (Item 3A). Clips installed over the top of studs and inserted within the ceiling runner or deflection channel. Clip shall be secured to the ceiling runner or deflection channel with No. 8 self drilling, self tapping steel fasteners through holes provided within the clip. Clip may be secured to the stud with No. 6 pan head steel screw through holes provided within the clip. As an alternate, the legs of the clip may be installed over the top of the stud without attachment in accordance with manufacturer's installation instructions.

FLEX-ABILITY CONCEPTS L L C — Three Legged Dog Deflection Clip

B. **Studs** — Steel studs to be min 3-1/2 in. (89 mm) wide. Studs cut 1/2 to 1 in. (13 to 25 mm) less in length than assembly height with bottom nesting in and secured to floor runner. When deflection channel (Item 3A) is used, steel studs attached to ceiling runner (Item 2A) with sheet metal screws located 1/2 in. (13 mm) below the bottom to the deflection channel. When deflection channel is not used, studs to nest in ceiling runner without attachment. When slotted ceiling runner (Item 2A1) is used, steel studs secured to slotted ceiling runner with No. 8 by 1/2 in. (13 mm) long wafer head steel screws at midheight of slot on each side of wall. When vertical deflection ceiling runner (Item 2A2) is used, steel studs secured to slotted vertical deflection clips, through the bushings, with steel screws at midheight of each slot. Stud spacing not to exceed 24 in. (610 mm) OC.

C. **Gypsum Board*** — Gypsum board sheets installed to a min total 5/8 in., 1-1/4 in., 1-1/2 in. or 2 in. (16, 32, 38 or 51 mm) thickness on each side of wall for 1, 2, 3 or 4 hr rated assemblies, respectively. Wall to be constructed as specified in the individual U400 Series Design in the UL Fire Resistance Directory, except that a max 1 or 2 in. (25 or 51 mm) gap (See Item 3) shall be maintained between the top of the gypsum board and the lower surface of the floor. The screws attaching the gypsum board to the studs along the top of the wall shall be located 1 in. (25 mm) below the bottom of the ceiling runner. No gypsum board attachment screws shall be driven into the ceiling runner or into the optional deflection channel.

The hourly fire rating of the joint system is equal to the hourly fire rating of the wall.

3. **Joint System — Max separation between bottom of floor and top of gypsum board (at time of installation of joint system) is 2 in. (51 mm) for 1 and 2 hr ratings and 1 in. (25 mm) for 3 and 4 hr ratings. The joint system is designed to accommodate a max 25 percent compression or extension from it's installed width for 1 and 2 hr ratings and a max 19 percent compression or extension from it's installed width for 3 and 4 hr ratings.** The joint system shall consist of forming and fill materials, with or without a deflection channel (Item 3A), as follows:

A. **Deflection Channel** — (Optional) - Max 3 in. (76 mm) deep min 24 gauge galv steel channel sized to accommodate ceiling runner (Item 2A). Deflection channel secured to concrete floor slab with steel masonry anchors spaced max 24 in. (610 mm) OC. The ceiling runner (Item 2A) is installed within the deflection channel to maintain a 1/2 to 3/4 in. (13 to 19 mm) gap between the top of the ceiling runner and the top of the deflection channel. The ceiling runner nests inside the deflection channel without attachment.

B. **Forming Material*** — Sections of min 4 pcf (64 kg/m³) density mineral wool batt compressed 50 percent in thickness and installed cut edge first to completely fill the gap between the top of the gypsum board and the bottom of the concrete floor. The forming material shall be installed flush

http://database.ul.com/cgi-bin/XYV/template/LISEXT/1FRAME/showpage.html?name=... 11/15/2009

XHBN.HW-D-0044 - Joint Systems — Page 4 of 4

with both surfaces of wall.

FIBREX INSULATIONS INC — FBX Safing Insulation

IIG MINWOOL L L C — MinWool-1200 Safing

ROXUL ASIA SDN BHD — Safe

ROXUL INC — Safe

ROCK WOOL MANUFACTURING CO — Delta Board

THERMAFIBER INC — SAF

C. **Fill, Void or Cavity Material* — Sealant** — Min 1/16 in. (1.6 mm) dry thickness (1/8 in. or 3.2 mm wet thickness) of fill material spray applied on each side of the wall between the top of the wall and the bottom of the floor, and overlap a min 1/2 in. (13 mm) onto gypsum board on both sides of wall. Additional 1/16 in. (1.6 mm) dry thickness (1/8 in. or 3.2 mm wet thickness) of fill material shall overlap a min 1/2 in. (13 mm) onto the floor on both sides of wall.

SPECIFIED TECHNOLOGIES INC — SpecSeal AS200 Elastomeric Spray

*Bearing the UL Classification Mark

Last Updated on 2009-04-29

Questions? Notice of Disclaimer Page Top

Copyright © 2009 Underwriters Laboratories Inc.®

The appearance of a company's name or product in this database does not in itself assure that products so identified have been manufactured under UL's Follow-Up Service. Only those products bearing the UL Mark should be considered to be Listed and covered under UL's Follow-Up Service. Always look for the Mark on the product.

UL permits the reproduction of the material contained in the Online Certification Directory subject to the following conditions: 1. The Guide Information, Designs and/or Listings (files) must be presented in their entirety and in a non-misleading manner, without any manipulation of the data (or drawings). 2. The statement "Reprinted from the Online Certifications Directory with permission from Underwriters Laboratories Inc." must appear adjacent to the extracted material. In addition, the reprinted material must include a copyright notice in the following format: "Copyright © 2009 Underwriters Laboratories Inc.®"

An independent organization working for a safer world with integrity, precision and knowledge

http://database.ul.com/cgi-bin/XYV/template/LISEXT/1FRAME/showpage.html?name=... 11/15/2009

FKP Architects

ARCHITECT OF RECORD
Paul C. Gloriod

LICENSED ARCHITECT — PAUL CHRISTOPHER GLORIOD — C-31500 — 4/30/2011 RENEWAL DATE — STATE OF CALIFORNIA

FOR INFORMATION ONLY

01/27/2010

REVISIONS

APPROVAL
REVIEWED IN ACCORDANCE WITH THE REQUIREMENTS OF T24, CCR
APPROVED
JAN 28 2010
Office of Statewide Health Planning & Development
FACILITIES DEVELOPMENT DIVISION

PROJECT NAME
CHILDREN'S HOSPITAL OF ORANGE COUNTY
455 S. Main St.
Orange, CA 92868-3874

TOWER II

CHOC HOSPITAL

PROJECT NUMBER
12011.00
Increment #7

OSHPD - PROJECT NUMBER
IL 072072-30

ISSUE
OSHPD PERMIT

DATE
01/27/2010

SCALE
NTS

DRAWING TITLE
TYPICAL PARTITION DETAILS

DRAWING NUMBER
A11.3.3

G:\PJ\CHOC\12002-00\CHOC\SHEETS\ACITIVE\CD\A11.3.3 TYPICAL PARTITION DETAILS.DWG
1/25/2010
AMEHTA