© 2009 FKP Architects, Inc. All rights reserved. No part of this document may be reproduced or utilized in any form without prior written authorization of FKP Architects, Inc.

masonry anchors spaced max 24 in. (610 mm) OC. When slotted ceiling runner is used, deflection channel (Item 4A) shall not be used.

BRADY CONSTRUCTION INNOVATIONS INC,

DBA SLIPTRACK SYSTEMS — SLP-TRK

CALIFORNIA EXPANDED METAL PRODUCTS CO — CST

CLARKWESTERN BUILDING SYSTEMS INC — Type SLT, SLT-H

METAL-LITE INC — The System

SCAPCO STEEL STUD MANUFACTURING CO

A2. **Light Gauge Framing* - Vertical Deflection Ceiling Runner** — When the room joint width is less than or equal to 3 in. (25 mm), vertical deflection ceiling runner may be used as an alternate to the ceiling runner in Items 3A and 3A1. Vertical deflection ceiling runner to consist of gale steel channel with slotted vertical deflection clips mechanically fastened vertical deflection clips, provided with step buttons, for permanent fastening of steel studs. Vertical deflection ceiling runner installed perpendicular to direction of fluted steel deck and secured to walls by with steel masonry anchors spaced max 24 in. (610 mm) OC. When vertical deflection ceiling runner is used, deflection channel (Item 4A) shall not be used.

THE STEEL NETWORK INC — VertiTrack VTD302, VTD400, VTD600 and VTD800

A3. **Light Gauge Framing* — Clipped Ceiling Runner** — As an alternate to the ceiling runner in Items 3A and 3A1, clipped runner to consist of gale steel channel with clips preformed in track flanges which positively engage the inside flange of the steel studs (Item 3B). Track sized to accommodate steel studs (Item 3B). Track flanges to be min 2-3/4 in. (70 mm). Clipped ceiling runner installed perpendicular to direction of fluted steel deck and secured to walls by with steel masonry anchors spaced max 12 in. (305 mm) OC. When clipped ceiling runner is used, deflection channel (Item 4A) shall not be used.

TOTAL STEEL SOLUTIONS L L C — Snap Trak

A4. **Light Gauge Framing* - Notched Ceiling Runner** — As an alternate to the ceiling runners in Items 3A through 3A3, notched ceiling runners to consist of C-shaped gale steel channel with notched return flanges sized to accommodate steel studs (Item 3B). Notched ceiling runner installed perpendicular to direction of fluted steel deck and secured to walls by with steel masonry anchors spaced max 12 in. (610 mm) OC. When notched ceiling runner is used, deflection channel (Item 4A) shall not be used.

OLMAR SUPPLY INC — Type SCR

B. **Studs** — Steel studs to be min. 2-1/2 in (69 mm) wide. Studs cut 1/2 to 1 in. (13 to 25 mm) less in length than assembly height with bottom nesting in and secured to floor runner. When deflection channel (Item 4A) is used, steel studs attached to ceiling runner with steel metal screws located 1/2 to 1 in. (13 mm) down from the top of the studs. Steel studs to be free to slide vertically in the ceiling runner without attachment. When slotted ceiling runner (Item 3A1) is used, steel studs secured in slotted ceiling runner with No. 8 by 1/2 in. (13 mm) long wafer head steel screws at midheight of stiz on each side of wall. When vertical deflection ceiling runner (Item 3A2) is used, steel studs secured to slotted vertical deflection clips, through the backings, with steel screws at midheight of each stud. Stud spacing not to exceed 24 in. (610 mm) OC.

C. **Gypsum Board*** — Gypsum board sheets installed to a min total thickness of 5/8 in., 1-1/4 in., 1-1/2 in. or 2 in. (16, 32, 38 or 51 mm) on each side of wall for 1, 2, 3 and 4 hr fire rated assemblies. Gypsum board to be Type X or C as specified in the Gypsum Board (CKNX) category of the UL Fire Resistance Directory, except that a max 1 or 2 in. (25 or 51 mm) gap (See Item 4) shall be maintained between the top of the gypsum board and the bottom surface of the steel floor or roof deck. The screws attaching the gypsum board to the studs along the top of the wall shall be located 1 in. (25 mm) below the bottom of the ceiling runner. No gypsum board attachment screws shall be driven into the ceiling runner or into the optional deflection channel.

When through penetrant (Item 2) is not used, the hourly fire rating of the joint system is equal to the hourly fire rating of the wall.

4. **Joint System — May be installed between bottom of floor or roof deck and top of gypsum board (at time of installation) if joint system is 2 hr, (51 mm) for 1 and 2 hr ratings and 1 hr, (25 mm) for 3 and 4 hr ratings. The joint system is designed to accommodate a max 25 percent compression or extension from it's installed width for 1 and 2 hr ratings and a max 19 percent compression or extension from it's installed width for 3 and 4 hr ratings.** The joint system shall consist of forming and fill materials, with or without a deflection channel (Item 4A), as follows:

A. **Deflection Channel** — (Optional) - Nom 2 in. (51 mm) deep min 24 gauge galv steel channel sized to accommodate steel studs (Item 3B). Deflection channel to be installed perpendicular to direction of fluted steel deck and secured to walls by with steel masonry anchors or nails spaced max 24 in. (610 mm) OC. The ceiling runner is installed within the deflection channel to maintain a 1/2 to 3/4 in. (13 to 19 mm) gap between the top of the ceiling runner and the top of the deflection channel. The ceiling runner rests inside the deflection channel without attachment.

B. **Forming Material*** — Nom 4 pcf (64 kg/m^3) mineral wool batt cut to the shape of the steel deck flute and installed into the flutes above the ceiling channel. The mineral wool batt pieces are to be stacked to a thickness approx 1 in. (25 mm) greater than the overall thickness of the wall and compressed to fit into the steel deck flutes. Batts shall be flush with the gypsum board surfaces on both sides of the wall. Additional sections of mineral wool batt insulation are compressed 50 percent in thickness and installed cut edge first to completely fill the gap above the top of the gypsum board, flush with both surfaces of wall.

FIBREX INSULATIONS INC — FBX Ceiling Insulation

IIG MINWOOL L L C — Minfiber-1200 Ceiling

ROCK WOOL MANUFACTURING CO — Delta board

ROXUL AEIA SDN BHD — Safe

ROXUL INC — Safe

THERMAFIBER INC — SAF

C. **Fill, Void or Cavity Material* — Sealant —** Min 1/8 in. (3.8 mm) dry thickness (min 1/8 in. or 3.2 mm wet thickness) of fill material spray applied on each side of the wall in the flutes of the steel floor or roof deck and between the top of the wall and the bottom of the steel floor or roof deck and overlap a min 1/2 in. (13 mm) onto gypsum board on both sides of wall. Additional 1/8 in. (3.8 mm) dry thickness (1/8 in. or 3.2 mm wet thickness) of fill material shall overlap a min 1/2 in. (13 mm) onto the steel deck and steel conduit or EMT (when used) on both sides of wall.

SPECIFIED TECHNOLOGIES INC — SpecSeal AS200 Elastomeric Spray

*Bearing the UL Classification Mark

Last Updated on 2009-04-29

Copyright © 2009 Underwriters Laboratories Inc.®

The appearance of a company's name or product in this database does not in itself assure that products so identified have been manufactured under UL's Follow-Up Service. Only those products bearing the UL Mark should be considered to be Listed and covered under UL's Follow-Up Service. Always look for the Mark on the product.

UL permits the reproduction of the material contained in the Online Certification Directory subject to the following conditions: 1. The Guide Information, Designs and/or Listings (files) must be presented in their entirety and in a non-misleading manner, without any manipulation of the data (or drawings). 2. The statement "Reprinted from the Online Certifications Directory with permission from Underwriters Laboratories Inc." must appear adjacent to the extracted material. In addition, the reprinted material must include a copyright notice in the following format: "Copyright © 2009 Underwriters Laboratories Inc.®"

ONLINE CERTIFICATIONS DIRECTORY

XHBN.HW-D-0043
Joint Systems

Page Bottom

Design/System/Construction/Assembly Usage Disclaimer

- Authorities Having Jurisdiction should be consulted in all cases as to the particular requirements covering the installation and use of UL Listed or Classified products, equipment, system, devices, and materials.
- Authorities Having Jurisdiction should be consulted before construction.
- Fire resistance assemblies and products are developed by the design submitter and have been investigated by UL for compliance with applicable requirements. The published information cannot always address every construction nuance encountered in the field.
- When field issues arise, it is recommended the first contact for assistance be the technical service staff provided by the product manufacturer noted for the design. Users of fire resistance assemblies are advised to consult the general Guide Information for each product category and each group of assemblies. The Guide Information includes specifics concerning alternate materials and alternate methods of construction.
- Only products which bear UL's Mark are considered as Classified, Listed, or Recognized.

Joint Systems

See General Information for Joint Systems

System No. HW-D-0043

April 29, 2009

Assembly Ratings — 1, 2, 3 and 4 Hr (See Items 2 and 3)

Nominal Joint Widths — 1 and 2 In. (See Item 4)

L Rating At Ambient — Less Than 1 CFM/Lin Ft

L Rating At 400°F — Less Than 1 CFM/Lin Ft

Class II Movement Capabilities — 19% and 25% Compression and Extension (See Item 4)

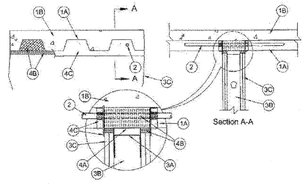

1. **Floor Assembly —** The fire-rated fluted steel deck/concrete floor assembly shall be constructed of the materials and in the manner described in the individual Series Floor-Ceiling Designs in the UL Fire Resistance Directory. The hourly fire rating of the floor assembly shall be equal to or greater than the hourly fire rating of the wall assembly. The floor assembly shall include the following construction features:

A. **Steel Floor and Form Units*** — Max 3 in. (76 mm) deep gale steel fluted floor units.

B. **Concrete** — Min 2-1/2 in. (64 mm) thick reinforced concrete, as measured from the top plane of the floor units.

1A. **Roof Assembly** — As an alternate to the floor assembly (Item 1), a fire rated fluted steel deck roof assembly may be used. The roof assembly shall be constructed of the materials and in the manner described in the individual P906 Series Roof-Ceiling Design in the UL Fire Resistance Directory. The hourly fire rating of the roof assembly shall be equal to or greater than the hourly fire rating of the wall assembly. The roof assembly shall include the following construction features:

A. **Steel Roof Deck** — Max 3 in. (76 mm) deep gale steel fluted roof deck.

B. **Roof Insulation** — Min 2-1/4 in. (57 mm) thick poured insulating concrete, as measured from the top plane of the steel roof deck.

2. **Through Penetrant** — (Optional) - Nom 3/8 in. or 1/2 in. (10 or 13 mm) diam rigid steel conduit, steel electrical metallic tubing (EMT) or Sch 40 PVC conduit may be installed parallel with and within the flutes of the steel floor or roof deck and the hollow cores of the concrete floor. When steel conduit or EMT is used, a min 1/2 in. (13 mm) to 3/8 in. (10 mm) between the conduit or EMT and the steel deck. A max of one conduit or EMT is permitted in an individual flute. **When conduit or EMT is installed in flute of steel deck, the hourly rating of the joint system is 1 hr.**

3. **Wall Assembly —** 1, 2, 3 or 4 hr fire-rated gypsum board/stud wall assembly shall be constructed of the materials and in the manner described in the individual U465 or V450 Series Wall and Partition Designs in the UL Fire Resistance Directory and shall include the following construction features:

A. **Steel Floor and Ceiling Runners** — Floor and ceiling runners of wall assembly shall consist of gale steel channels sized to accommodate steel studs. When deflection channel (Item 4A) is used, flange height of ceiling runner is to be equal to or greater than flange height of deflection channel (Item 4A) plus deflection of ceiling runner (See Item 4). Deflection channel (Item 4A) shall have a 1/2 in. (13 mm) gap maintained between the top of the ceiling runner and the top of the deflection channel. When deflection channel is not used, flange height of ceiling runner shall be min 3/4 in. (19 mm) greater than runn joint width. Ceiling runner installed perpendicular to direction of fluted steel deck and secured with steel masonry anchors or nails spaced max 24 in. (610 mm) OC.

A1. **Light Gauge Framing* — Slotted Ceiling Runner** — Slotted ceiling runner may be used as an alternate to the ceiling runner in Item 3A. Slotted ceiling runner to consist of gale steel channel with slotted flanges sized to accommodate steel studs (Item 3B). Ceiling runner installed perpendicular to direction of fluted steel floor or roof deck and secured to walls by with steel

B5 UL DESIGN HW-D-0043
NTS

RFI 2978.1
Edge of slab penetration allowed

2. **Curtain Wall Assembly —** The curtain wall assembly shall incorporate the following construction features:

A. **Mullion Mounting Clips** — Min 4 in. (102 mm) long angles with one nom 4 in. (102 mm) leg for attachment to edge of floor assembly and with one leg approx 4 in. (102 mm) longer than distance to nearest face of mullion. Clips to be formed of min 1/4 in. (6 mm) thick steel. Clips welded to steel angle or edge of floor assembly (Item 1) on each side of vertical mullion (Item 2B) at each floor level. Each clip to be provided with elongated holes to accommodate designed amount of movement. Top edge of each clip to be recessed min 1/2 in. (13 mm) below top surface of floor.

B. **Framing —** The rectangular tubing mullions (vertical members) and transoms (horizontal members) shall be min 2-1/2 in. (64 mm) wide by 5 in. (127 mm) deep and shall be formed from min 0.095 in. (2.2 mm) thick aluminum. Mullions spaced max 60 in. (152 cm) OC and secured to mullion mounting clips (Item 2A) at each floor level with max 5/8-16 by 4 in. (102 mm) long hex head steel bolts in conjunction with steel nuts and washers. Interior face of mullions to be max 8 in. (204 mm) from edge of floor assembly. Transoms to be spaced min 36 in. (91 cm) OC. The minimum height from the top of the floor to the bottom of the vision panel sill is 6 in. (152 mm).

C. **Spandrel Panels —** The spandrel panels shall consist of one of the following types:

a. **Glass Panels —** Nom 1/4 in. (6 mm) thick opaque heat-strengthened glass. Each panel secured in position with aluminum pressure plates in conjunction with glazing gaskets and steel screws.

b. **Aluminum Panels —** Nom 1/8 in. (3 mm) thick aluminum panels with 1/4 in. (6 mm) thick adjm. Each panel secured in position with aluminum pressure plates in conjunction with gaskets and steel screws.

c. **Stone Panels —** Nom 3-3/16 in. (46 mm) thick polished granite spandrel panels with 1 in. (25 mm) thick gauged edges. Each panel secured in position with aluminum pressure plates in conjunction with gaskets and steel screws.

D. **Vision Panels —** Nom 1/4 in. (6 mm) thick transparent heat-strengthened glass or nom 1 in. (25 mm) thick insulated glass units with two leaves of nom 1/4 in. (6 mm) thick transparent heat-strengthened glass separated by a 1/2 in. (25 mm) air space. Each panel secured in position with aluminum pressure plates in conjunction with glazing gaskets and steel screws.

E. **Spandrel Panel Perimeter Angles —** Nom 1-1/2 by 1-1/2 in. (38 by 38 mm) No. 22 gauge (0.031 in. or 0.79 mm thick) galvanized steel angles installed around entire perimeter of each spandrel panel. Angles to be installed in a manner to form a 1 in. (25 mm) deep pocket between thickness of curtain wall insulation (Item 2G). Angles cut to be discontinuous at mullion mounting clips (Item 2A). Angles screw-attached to mullions and transom along sides and top of each spandrel panel with No. 8 by 1 in. (25 mm) long self-drilling, self-tapping steel screws spaced max 12 in. (305 mm) OC. Angle along bottom of each spandrel panel to be screw-attached to leg of angle on mullion as noted and without any direct attachment to transom. At mullion mounting clips, a length of steel angle shall be installed to bridge between the perimeter angles over the mullion mounting clips. The "bridge" shall be min approx 8 in. (203 mm) longer than the clear space between angles and shall be secured to the perimeter angles with min No. 8 by 1 in. (25

F. **Bottoms Too —** Two nom 1-1/2 by 1-1/2 in. (38 by 38 mm) No. 20 gauge (0.038 in. or 0.97 mm thick) gale steel angles secured together, back-to-back, to form stiffener law for installation in each horizontal seam of the curtain wall insulation (Item 2G). The angle legs forming the stem of the law shall be secured together using No. 8 by 1/2 in. (13 mm) long self-drilling, self-tapping steel screws spaced max 8 in. (204 mm) OC. The law shall be installed with a clearance of 1/8 to 1/4 in. (3 to 6 mm) at each end and shall be screw-attached to the spandrel panel perimeter angles with No. 8 by 1 in. (25 mm) long self-drilling, self-tapping steel screws spaced max 8 in. (204 mm) OC. Additional fasteners shall be provided 1/4 in. (6 mm) clear holes at each end. One stiffener law shall be located with its stem at an elevation 2 in. (51 mm) below the top plane of the floor at each floor level.

G. **Curtain Wall Insulation* —** Min 2 in. (51 mm) thick mineral wool batt insulation faced on one side with aluminum foil/scrim vapor retarder, supplied in min 36 in. (914 cm) wide batts. Insulation batts to be installed with no vertical seams. Insulation panels tightly fitted between vertical mullions and between the stem of the stiffener law (Item 2F) and the transom, flush with the exterior face of the mullions and transom. Insulation panels to be secured in place and compressed to each stiffener law with cup head weld pins (Item 2I) or 2-1/2 in. (64 mm) long steel screws with min 1-1/2 in. (38 mm) diameter gale steel clinch clinchits spaced max 12 in. (305 mm) OC. The horizontal seam between insulation panels shall be located 2 in. (51 mm) below the top plane of the floor at each floor level.

THERMAFIBER INC — FIRESPAN 90

H. **Framing Covers - Curtain Wall Insulation* —** Min 8 in. (204 mm) wide strips cut from the same min 2 in. (51 mm) thick mineral wool batt insulation used for the curtain wall insulation (Item 2G). Framing covers to be centered over mullions and secured to the spandrel panel perimeter

angles with cup head weld pins (Item 2I) or 4-1/2 in. (114 mm) long steel screws with min 1-1/2 in. (39 mm) diameter gale steel clinch chinchits spaced max 12 in. (305 mm) OC. Where more than one spandrel panel (Item 2C) occurs between vertically separated vision panels, the horizontal transom between spandrel panels shall also be covered with an 8 in. (204 mm) wide framing cover in the same manner as on the vertical mullions. Framing covers on mullions to abut the mineral wool batt saffing material (Item 3A) above and below floor.

THERMAFIBER INC — FIRESPAN 90

I. **Weld Pin —** In lieu of steel screws, No. 12 gauge (2 mm diam) gale steel weld pin with nom 1-3/16 in. (30 mm) diam gale steel cup head. Cup head weld pins provided in two lengths. One length to be equal to thickness of curtain wall insulation (Item 2G) and second length to be equal to thickness of curtain wall insulation plus thickness of framing cover (Item 2H). Cup head weld pins inserted through curtain wall insulation and mullion covers and welded to spandrel panel perimeter angles max 12 in. (305 mm) OC.

J. **Light Gauge Framing* - Spiral Anchor —** (Not Shown) - As an alternate to the weld pins (Item 2I), gale steel wire spiral anchors may be used to secure the framing covers (Item 2H) to the curtain wall insulation (Item 2G) on each side of the mullion. Nom length of spiral anchors to be equal to thickness of curtain wall insulation plus thickness of framing cover. Spiral anchors driven through mullion covers and into curtain wall insulation and spaced max 12 in. OC.

THERMAFIBER INC

3. **Safing System —** Max separation between edge of floor assembly and face of framing members (at time of installation) is 8 in. (204 mm). The safing system is designed to accommodate vertical shear movement up to a max of 5 percent of its installed width. The safing system shall incorporate the following construction features:

A. **Forming Material* —** Nom 4 pcf (64 kg/m^3) density mineral wool batt insulation, flat sections cut to a min 4 in. (102 mm) width and stacked to a thickness which is min 25 percent greater than the width of linear gap between the curtain wall insulation and the edge of the concrete floor slab. The stacked forming material is compressed 30 percent in the thickness direction and inserted cut-edge first into the linear gap such that its top surface is flush with the top surface of the floor assembly. A max of one tightly-fitted seam is permitted between mullion. Additional pieces of forming material to be friction-fit into spaces between mullion mounting clips at each mullion location.

THERMAFIBER INC — SAF

B. **Fill, Void or Cavity Material* —** Min 1/8 in. (3 mm) wet thickness (min 1/16 in. or 1.6 mm dry thickness) of fill material spray-applied over top of forming material and lapping min 1/2 in. (13 mm) onto the top surface of the floor and onto the curtain wall insulation and framing covers.

SPECIFIED TECHNOLOGIES INC — SpecSeal AS200 Elastomeric Spray or SpecSeal Fast Tack Spray

*Bearing the UL Classification Mark

Last Updated on 2008-05-21

Copyright © 2009 Underwriters Laboratories Inc.®

The appearance of a company's name or product in this database does not in itself assure that products so identified have been manufactured under UL's Follow-Up Service. Only those products bearing the UL Mark should be considered to be Listed and covered under UL's Follow-Up Service. Always look for the Mark on the product.

UL permits the reproduction of the material contained in the Online Certification Directory subject to the following conditions: 1. The Guide Information, Designs and/or Listings (files) must be presented in their entirety and in a non-misleading manner, without any manipulation of the data (or drawings). 2. The statement "Reprinted from the Online Certifications Directory with permission from Underwriters Laboratories Inc." must appear adjacent to the extracted material. In addition, the reprinted material must include a copyright notice in the following format: "Copyright © 2009 Underwriters Laboratories Inc.®"

RFI 3486
Conduit penetration 2" max detail

RFI 3536
Refer to EJ NS103102JP as alternate detail

B3 UL DESIGN CW-D-2042
NTS

ONLINE CERTIFICATIONS DIRECTORY

XHDG.CW-D-2042
Perimeter Fire-containment Systems

Page Bottom

Design/System/Construction/Assembly Usage Disclaimer

- Authorities Having Jurisdiction should be consulted in all cases as to the particular requirements covering the installation and use of UL Listed or Classified products, equipment, system, devices, and materials.
- Authorities Having Jurisdiction should be consulted before construction.
- Fire resistance assemblies and products are developed by the design submitter and have been investigated by UL for compliance with applicable requirements. The published information cannot always address every construction nuance encountered in the field.
- When field issues arise, it is recommended the first contact for assistance be the technical service staff provided by the product manufacturer noted for the design. Users of fire resistance assemblies are advised to consult the general Guide Information for each product category and each group of assemblies. The Guide Information includes specifics concerning alternate materials and alternate methods of construction.
- Only products which bear UL's Mark are considered as Classified, Listed, or Recognized.

Perimeter Fire-containment Systems

See General Information for Perimeter Fire-containment Systems

System No. CW-D-2042

May 21, 2008

F Rating — 2 Hr

T Rating — 1/4 Hr

Linear Opening Width — 8 In. Max

L Rating At Ambient — Less Than 1 CFM/Lin Ft

L Rating At 400°F — Less Than 1 CFM/Lin Ft

Class II Movement Capabilities - 5% Vertical Shear (See Item 5)

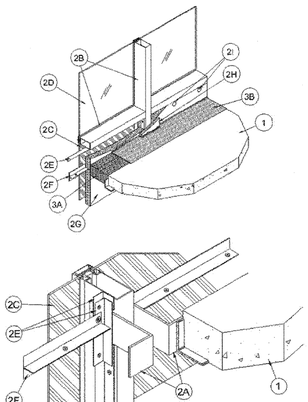

1. **Floor Assembly —** Min 4-1/2 in. (114 mm) thick reinforced lightweight or normal weight (100-150 pcf or 1600-2400 kg/m^3) structural concrete. Perimeter of floor assembly to be provided with min 3 by 3 by 1/4 in. (76 by 76 by 6 mm) thick cast-in-place structural steel angle for weld-attachment of mullion mounting clips (Item 2A).

ONLINE CERTIFICATIONS DIRECTORY

XHDG.CW-S-1001
Perimeter Fire-containment Systems

Page Bottom

Design/System/Construction/Assembly Usage Disclaimer

- Authorities Having Jurisdiction should be consulted in all cases as to the particular requirements covering the installation and use of UL Listed or Classified products, equipment, system, devices, and materials.
- Authorities Having Jurisdiction should be consulted before construction.
- Fire resistance assemblies and products are developed by the design submitter and have been investigated by UL for compliance with applicable requirements. The published information cannot always address every construction nuance encountered in the field.
- When field issues arise, it is recommended the first contact for assistance be the technical service staff provided by the product manufacturer noted for the design. Users of fire resistance assemblies are advised to consult the general Guide Information for each product category and each group of assemblies. The Guide Information includes specifics concerning alternate materials and alternate methods of construction.
- Only products which bear UL's Mark are considered as Classified, Listed, or Recognized.

Perimeter Fire-containment Systems

See General Information for Perimeter Fire-containment Systems

System No. CW-S-1001

January 26, 2008

F Rating — 2 Hr

T Rating — 1 Hr

Integrity Rating — 2 Hr

Insulation Rating — 1 Hr

Linear Opening Width — 2-1/2 In. Max

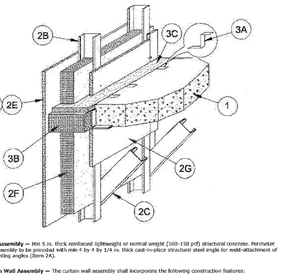

1. **Floor Assembly —** Min 5 in. thick reinforced lightweight or normal weight (100-150 pcf) structural concrete. Perimeter of floor assembly to be provided with min 4 by 4 by 1/4 in. thick cast-in-place structural steel angle for weld-attachment of stud mounting angles (Item 2A).

2. **Curtain Wall Assembly —** The curtain wall assembly shall incorporate the following construction features:

A. **Mounting Angles —** (Not Shown) — Min 4 in. long angles with one nom 4 in. leg for attachment to edge of floor assembly and with one leg approx 2-1/2 to 3 in. longer than distance to interior face of steel studs. Angles to be formed of min 1/8 in. thick steel. Angles welded to steel angle at edge of floor assembly (Item 1) on one side of each steel stud (Item 2B) at each floor level. Top edge of each mounting angle to be recessed 1 to 2 in. below top surface of floor.

B. **Steel Studs —** C-shaped studs formed from min 0.034 in. thick (20 ga) galv steel. The steel studs shall be 3-5/8 in. wide by 1-1/4 in. deep with 5/16 in. wide stiffening flanges. Studs spaced max 24 in. OC and welded, bolted or screwed to mounting angles (Item 2A) at each floor level. When connections backer units (Item 2E) are used for exterior sheathing, max stud spacing is 16 in. OC. Interior face of studs to be max 2-1/2 in. from edge of floor assembly.

C. **Steel Struts —** Short lengths of steel stud (Item 2B) used to brace each steel stud against lateral movement. One end of strut bolted, screwed or welded to steel stud beneath plane of floor assembly. Opposite end of strut anchored to underside of floor.

D. **Gypsum Board*** — One layer of nom 5/8 in. thick, 48 in. wide gypsum sheathing installed to cover entire exterior surface of wall. Sheathing applied with joints centered over studs and secured to mounting angles (Item 2A) at each floor level with bugle head steel screws spaced max 8 in. OC along the edges and max 12 in. OC in the field of each sheet.

See Gypsum Board (CKNX) category for names of Classified Companies and product types.

E. **Cement Board Backer Units*** — As an alternate to the gypsum board sheathing (Item 2D), 1/2 in. or 5/8 in. thick square-edge boards attached to studs with 1-5/8 in. long corrosion resistant self-tapping wafer-head steel screws spaced 8 in OC. Joints covered with glass fiber mesh tape.

UNITED STATES GYPSUM CO — Durock Exterior Cement Board, Durock Cement Board or Durock WRB.

F. **Curtain Wall Insulation*** — Min 3 in. thick mineral wool batt insulation, unfaced or faced on one side with aluminum foil/scrim vapor retarder, supplied in nom 24 in. wide batts. Insulation batts installed to completely fill all stud cavities of curtain wall above the top of the fill material (Item 3C) and below the forming material (Item 3B). Insulation batts to be friction-fitted between studs with adjoining lengths of batt tightly butted.

THERMAFIBER INC — FIRESPAN 90

G. **Gypsum Board*** — One layer of nom 5/8 in. thick, 48 in. wide gypsum board applied with joints centered over studs. Gypsum board secured to steel studs on interior surface of curtain wall with nom 1 in. long bugle head steel screws spaced max 8 in. OC along the edges and max 12 in. OC in the field of each sheet. Gypsum board installed to cover entire interior surface of wall above the top of the fill material (Item 3C) and below the forming material (Item 3B).

See Gypsum Board (CKNX) category for names of Classified Companies and product types.

H. **Siding, Brick or Stucco —** Aluminum siding, steel siding, brick veneer or stucco attached to studs over gypsum sheathing or cement/fibcus backer units and meeting the requirements of local code agencies. Brick veneer wall attached to studs with corrugated metal wall ties attached to each stud with steel screws.

3. **Perimeter Fire Containment Systems —** The perimeter fire containment system shall incorporated the following construction features:

A. **Support Clips —** Z-shaped clips formed from 1 in. wide strips of 20 ga galv steel. Clips to be 3 in. high with 2 in. and 3 in. upper and lower horizontal legs, respectively. The 3 in. horizontal leg is to be anchored into edge of forming material (Item 3B) at its midlength and the 2 in. horizontal leg is to seat on top surface of floor. Support clips to be located 3 in. from each side of each stud (Item 2B) along perimeter of floor assembly.

B. **Forming Material*** — Nom 4 in. thick, nom 4 pcf density mineral wool batt insulation. Batt sections to be cut to a width 1/2 in. to 1 in. greater than the width of the gap between the gypsum sheathing and the edge of the concrete floor and compression-fitted into the perimeter joint such that its top surface is recessed 1 in. from top surface of floor assembly. Length of batt to be equal to on center spacing of steel studs such that it is friction-fitted between studs and mounting angles without seams. Additional pieces of mineral wool batt to be stuffed into cavity of each steel stud throughout the thickness of the forming material.

THERMAFIBER INC — SAF

C. **Fill, Void or Cavity Material* —** Min 1 in. thickness of fill material installed atop forming material. Bush with top surface of floor assembly. Dry mix or ready-mix material. Dry mix material mixed with water in accordance with the accompanying installation instructions.

UNITED STATES GYPSUM CO — FC, RFC

*Bearing the UL Classification Mark

Last Updated on 2009-01-29

Copyright © 2009 Underwriters Laboratories Inc.®

The appearance of a company's name or product in this database does not in itself assure that products so identified have been manufactured under UL's Follow-Up Service. Only those products bearing the UL Mark should be considered to be Listed and covered under UL's Follow-Up Service. Always look for the Mark on the product.

UL permits the reproduction of the material contained in the Online Certification Directory subject to the following conditions: 1. The Guide Information, Designs and/or Listings (files) must be presented in their entirety and in a non-misleading manner, without any manipulation of the data (or drawings). 2. The statement "Reprinted from the Online Certifications Directory with permission from Underwriters Laboratories Inc." must appear adjacent to the extracted material. In addition, the reprinted material must include a copyright notice in the following format: "Copyright © 2009 Underwriters Laboratories Inc.®"

RFI 3486
Conduit penetration 2" max detail

A2 UL DESIGN CW-S-1001
NTS

STI

1 OR 2 HR RATED FIRESTOP USING SPECSEAL® FIRESTOP PRODUCTS

NS098908B

Prepared by Bernadette Bautista

Date REV_01/27/2010

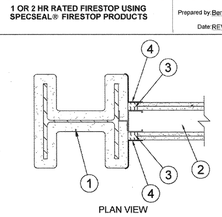

PLAN VIEW

1. STEEL COLUMN PROTECTED WITH SPRAY-APPLIED FIRE RESISTIVE MATERIAL (SFRM; CAFC0® TYPE 300 OR MONOKOTE® MK-6/HY) TO A THICKNESS CAPABLE OF ACHIEVING 1 OR 2 HR FIRE RATING
2. GYPSUM BOARD/STEEL STUD WALL (1 OR 2 HR; UL U400 SERIES DESIGN). WALL ATTACHED TO COLUMN PER UL SYSTEM NO. HW-D-0252. JOINT WIDTH IS MAX 1".
3. MIN 6-PCF MINERAL WOOL BATT INSULATION COMPRESSED 50% AND INSTALLED INTO JOINTS TO FULL DEPTH.
4. SPECSEAL® AS200 ELASTOMERIC SPRAY APPLIED OVER MINERAL WOOL TO A MIN 1/8" WET THICKNESS WITH MIN 1/2" OVERLAPS. INCREASE OVERLAP TO 2" AT SFRM.

NOTE: The products used in this design have been tested as follows:
- ASTM E1966/UL1709: Refer to System Nos. HW-D-0252
- ASTM E119: Time/Temperature Exposure, Cotton Waste Ignition.

This Design Represents an Engineering Recommendation

NOTICE: The information contained herein is based upon internal & third party testing which we believe to be accurate. This information is provided for engineering purposes only, and unless otherwise noted, relates to the specified engineering product. The end user determines the suitability of the product and the design in the intended application. Since the use of the product is beyond our control, Specified Technologies Inc's only responsibility is to refund or replace materials found to be defective as per our standard warranty.

CHOC
Company
ORANGE CA
Address
KHS&S
Contractor
Address
Signature

Specified Technologies Inc. • 200 Evans Way • Somerville, NJ 08876 • (800) 992-4100 • FAX (908) 231-8415

A3 1 or 2 HOUR FIRESTOP DETAIL
NTS

FKP Architects

ARCHITECT OF RECORD

Paul C. Gloriod

LICENSED ARCHITECT
PAUL CHRISTOPHER GLORIOD
C-31500
4/30/2011
RENEWAL DATE
STATE OF CALIFORNIA
01/27/2010

REVISIONS

APPROVAL

REVIEWED IN ACCORDANCE WITH THE REQUIREMENTS OF T24, CCR
APPROVED
JAN 28 2010
Office