© 2007 FKP Architects, Inc. All rights reserved. No part of this document may be reproduced or utilized in any form without prior written authorization of FKP Architects, Inc.

SEISMIC BRAIDED HOSE SCHEDULE									
ITEM	MANUFACTURE	SERVICE	QTT	PIPE ID	OVER ALL LENGTH	MAX PRESSURE PSI	OFFSET CAPABILITY INT	OFFSET CAPABILITY PERM	MAX SPRING RATED FROM FLEX
SL 1	MASON TYPE FF	CHWS/R	6	10"	29"	125	2"	4"	885 LBS/IN

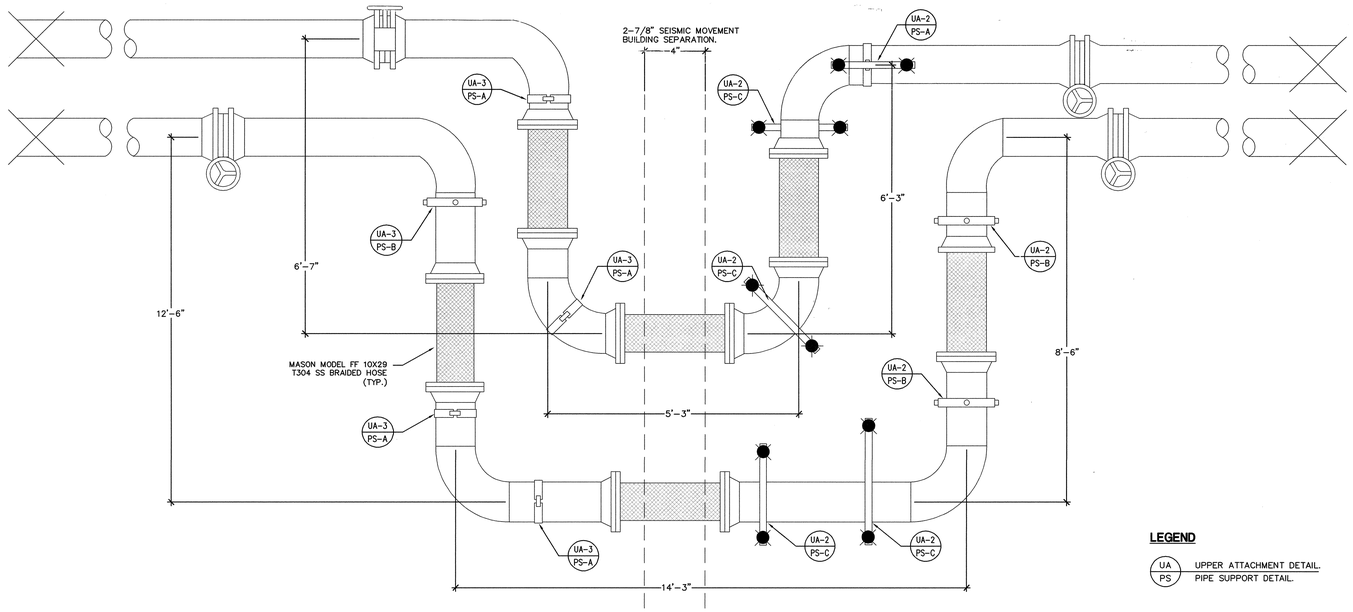

LEGEND

UA — UPPER ATTACHMENT DETAIL.
PS — PIPE SUPPORT DETAIL.

CHILLED WATER PIPING SEISMIC LOOP @ LEVEL 4 — SCALE NONE — 1

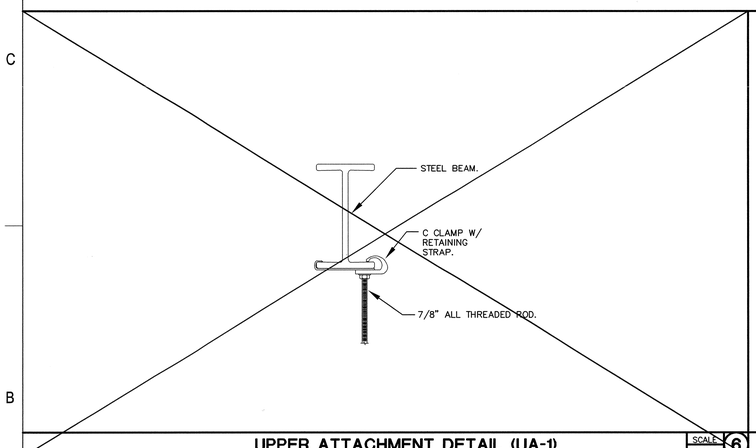

UPPER ATTACHMENT DETAIL (UA-1) — SCALE NONE — 6

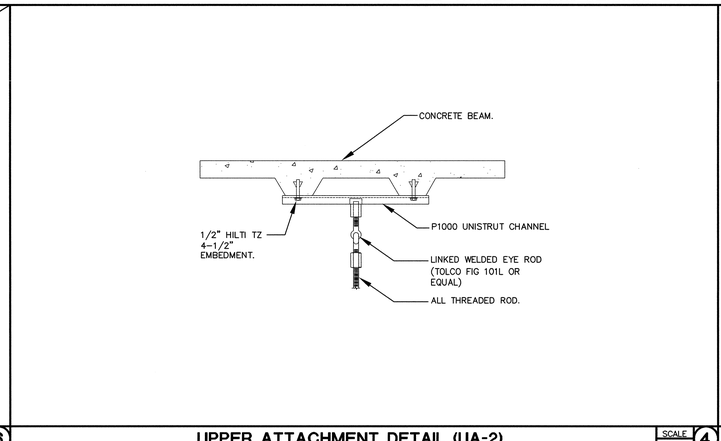

UPPER ATTACHMENT DETAIL (UA-2) — SCALE NONE — 4

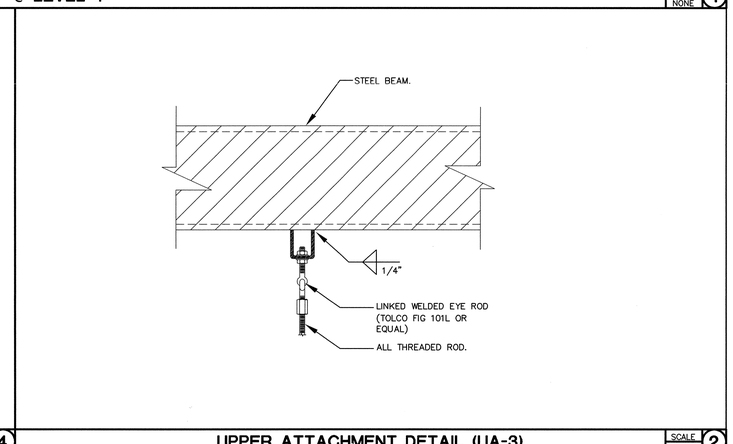

UPPER ATTACHMENT DETAIL (UA-3) — SCALE NONE — 2

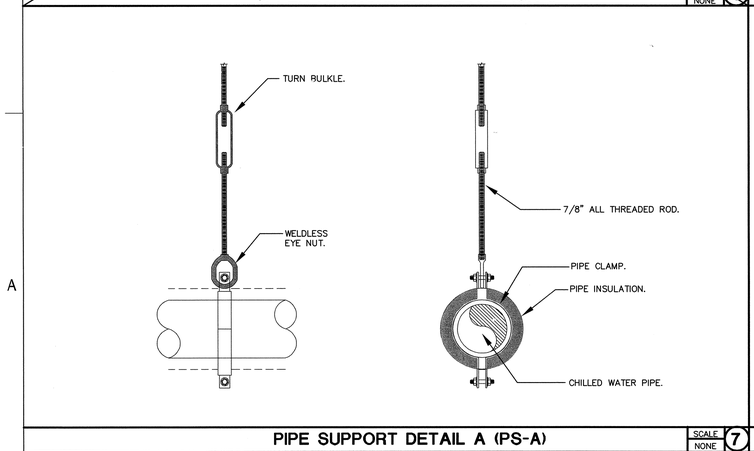

PIPE SUPPORT DETAIL A (PS-A) — SCALE NONE — 7

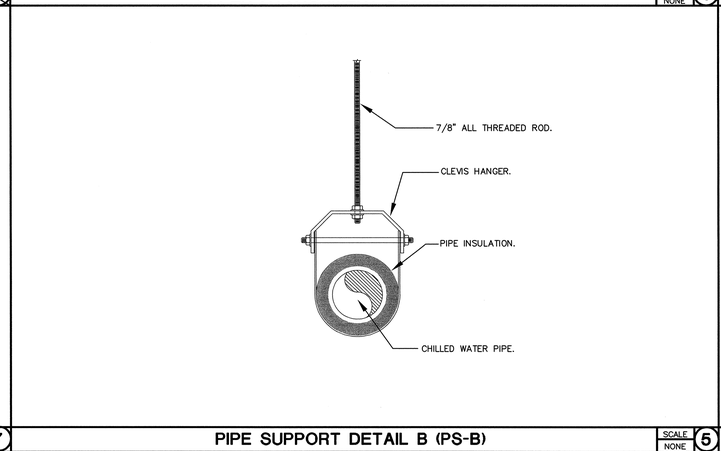

PIPE SUPPORT DETAIL B (PS-B) — SCALE NONE — 5

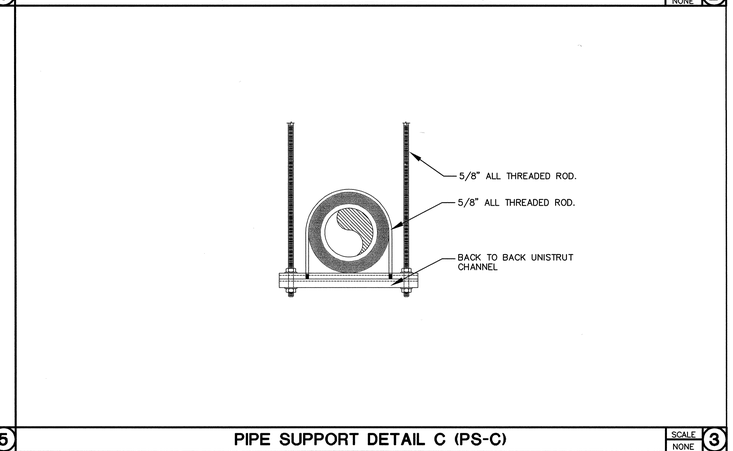

PIPE SUPPORT DETAIL C (PS-C) — SCALE NONE — 3

FKP Architects

ARCHITECT OF RECORD

"Achitect of Record signature line only; this drawing was not prepared under the direct supervision of the Architect of Record. The direct responsibility for preparation of this sheet lies with its corresponding professional stamp and signature. The signature of the Architect of Record in general responsible charge of the project is provided as required by Title 24, Part 1, Section 7-115 (a)".

ARCHITECT - PAUL C. GLORIOD

CONSULTANT

TMAD TAYLOR &GAINES
- STRUCTURAL
- MECHANICAL
- ELECTRICAL
- CIVIL

100 South Anaheim Boulevard, Suite 150
Anaheim, California 92805
Phone: 714.490.5555 Fax: 714.490.5560
Project No. 2305-163-07

REGISTERED PROFESSIONAL ENGINEER — GEORGES MAZLOOMIAN — No. 22257 — Exp. 12/31/13 — MECHANICAL — STATE OF CALIFORNIA

Changes on these drawings do not consist of materially altered changes to approved drawings and don't require a change order.
OSHPD review ACO
OSHPD review FLSO
OSHPD review DSE

REVISIONS

426	01/30/2012	CHANGE ORDER #320 2012-01295

APPROVAL

Office of Statewide Health Planning & Development — REVIEWED IN ACCORDANCE WITH THE REQUIREMENTS OF THE CCR APPROVED
CHANGE ORDER# 230
INSTRUCTION BULLETIN#
DEFERRED APPROVAL#
ADDENDUM

PROJECT NAME

CHILDREN'S HOSPITAL OF ORANGE COUNTY
455 S. Main St.
Orange, CA 92868-3874

TOWER II

CHOC HOSPITAL

PROJECT NUMBER

12011.00
Increment #7

OSHPD - PROJECT NUMBER

IL 072072-30

ISSUE

OSHPD PERMIT

DATE

01/27/2010

SCALE

NONE

DRAWING TITLE

MECHANICAL DETAILS - CHILLED WATER PIPING LOOP

DRAWING NUMBER

M10.12 426

2/5/2012 AHERNANDEZ