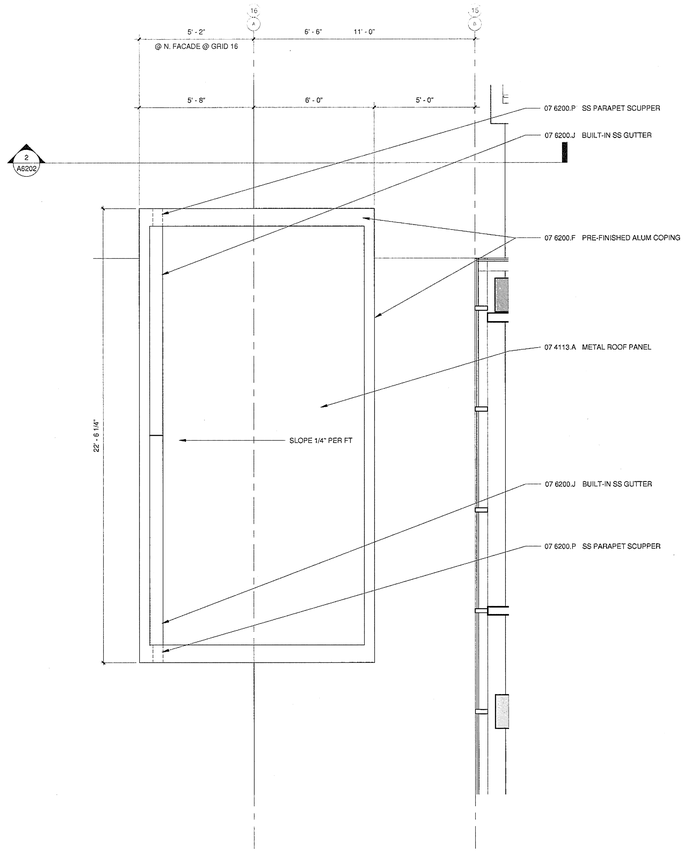

6 TYP. ROOF PLAN @ JUNIOR POD
A5101 | A2601 3/8" = 1'-0"

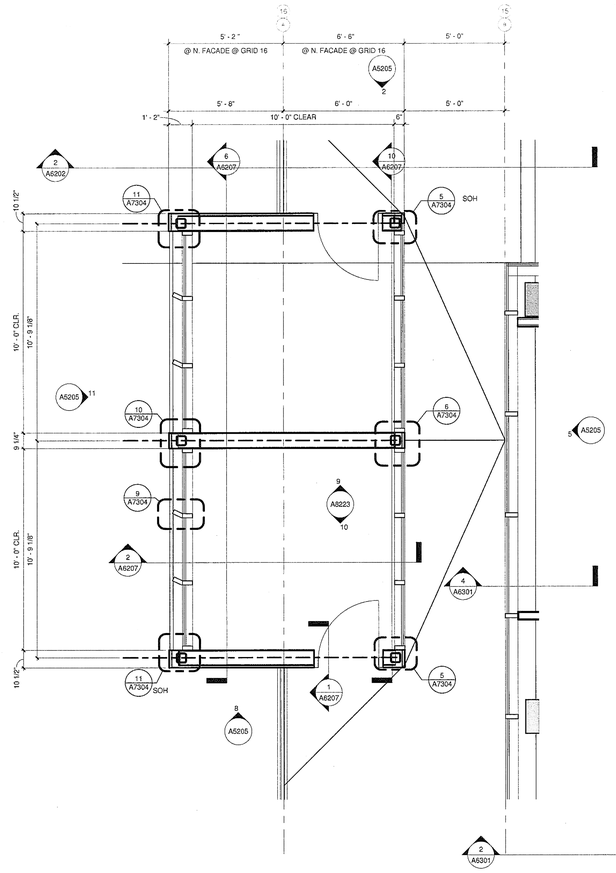

4 TYP. PLAN @ JUNIOR POD
A2120 | A2601 3/8" = 1'-0"

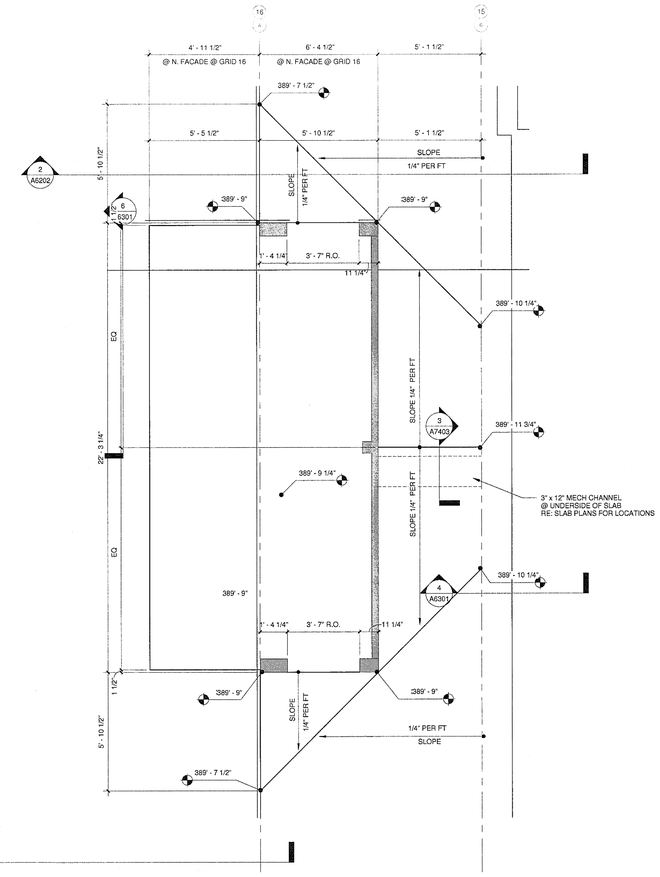

2 TYP. SLAB PLAN @ JUNIOR POD
A2601 3/8" = 1'-0"

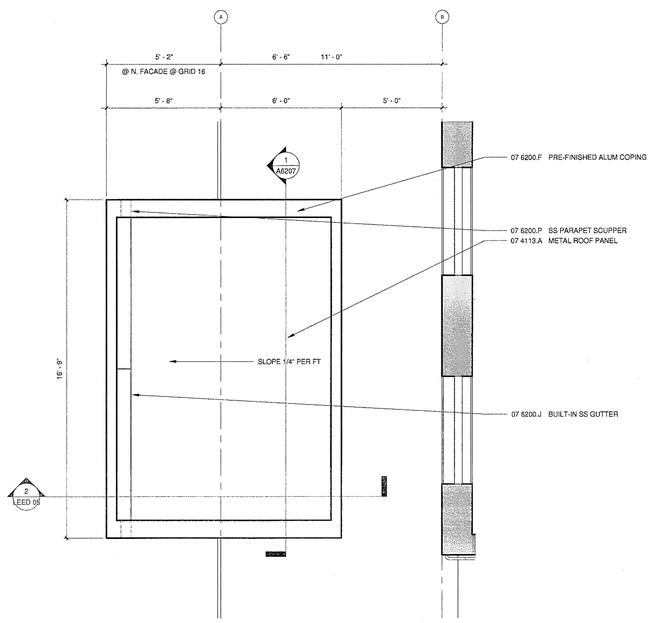

5 TYP. ROOF PLAN @ SENIOR POD
A5101 | A2601 3/8" = 1'-0"

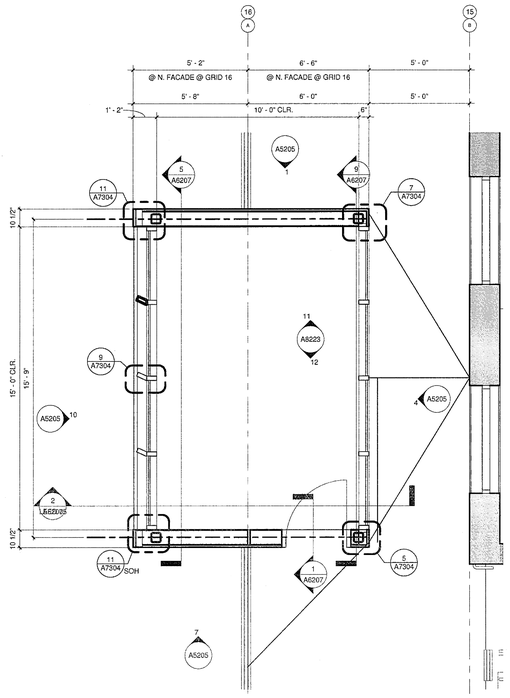

3 TYP. PLAN @ SENIOR POD
A2120 | A2601 3/8" = 1'-0"

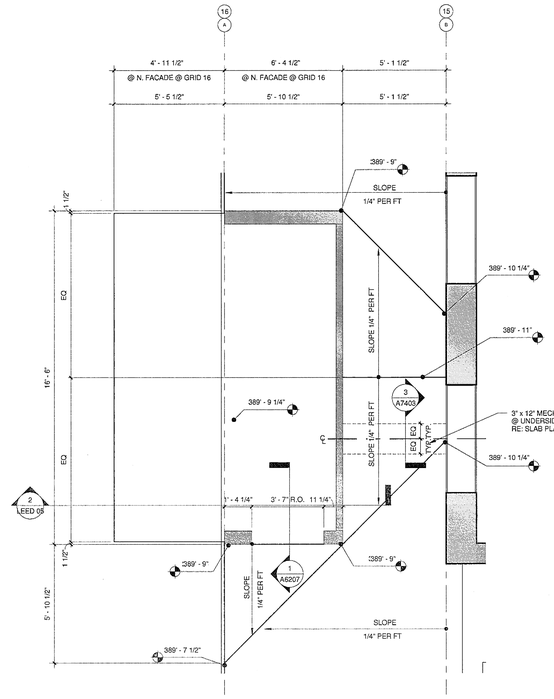

APPROVED
FIRE AND PANC ONLY
04 - 15 - 2010
STATE FIRE MARSHAL
CONSTRUCTION SERVICES

1 TYP. SLAB PLAN @ SENIOR POD
A2601 3/8" = 1'-0"

U.C.S.D.

DATE	
4/21/10	PRELIMINARY DRAWINGS ☐
	PROGRESS DRAWINGS ☐
	REVIEW DRAWINGS ☐
	CONSTRUCTION DRAWINGS ☑

COPYRIGHT © FENTRESS ARCHITECTS

ISSUED FOR	DATE
BID PK #1 80 CD	12.01.08
BID PK #1 100 CD	02.16.09
BID PK #2 100 CD	03.26.09
100% CD	05.08.09
CD-3	01.07.10

SANFORD CONSORTIUM FOR REGENERATIVE MEDICINE

2880 TORREY PINES SCENIC DRIVE
LA JOLLA, CALIFORNIA 92037

CONSULTANT

Lankford/Phelps Consortium LLC
655 West Broadway, Suite 1400 San Diego, CA 92101
619.702.0500 619.702.0501 Fax

FENTRESS | ARCHITECTS
401 Broadway, Suite 1400 San Diego, CA 92101
619.702.0500

DAVIS DAVIS ARCHITECTS
2657 Fifth Avenue, San Diego, CA 92103

STAMP

LICENSED ARCHITECT
Jeffrey W Olson
No. C-31761
REN. 03/31/11
STATE OF CALIFORNIA

SHEET NAME
ENLARGED POD PLANS

DRAWN BY: Author

PROJECT #: 200725.000

SHEET NUMBER
A2601

4/12/2010 12:16:07 PM
C:\FA Revit Projects\200725.SCRM.Jesse D2.rvt

Warning: It is a violation of the law for any person, unless acting under the direction of a licensed architect, to alter an item in this document. If an item in this document is altered, the altering architect, if other than the architect of record, shall affix to the item his seal and the notation "altered by" follows by his signiture and the date of such alteration, and the specific description of the alteration.