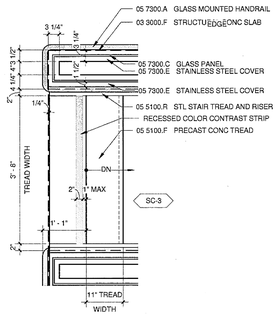

9 STAIR 3, 8 & 9 HEAD
A2221 A2801 3/4" = 1'-0"

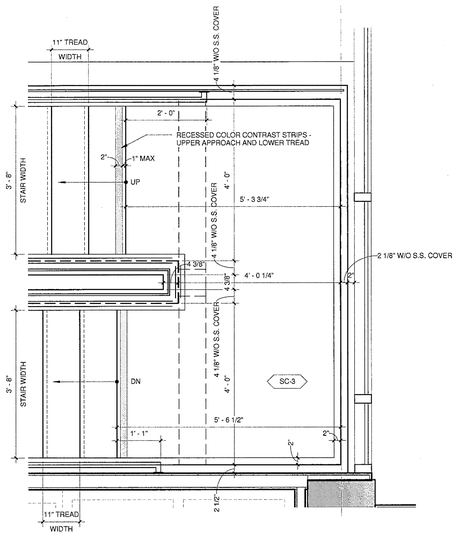

6 STAIR 3, 8, & 9 ENLARGED LANDING
A2221 A2801 3/4" = 1'-0"

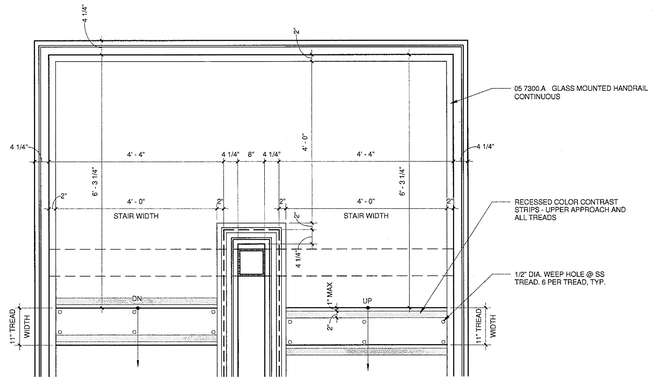

3 STAIR 1 ENLARGED LANDING
A2221 A2801 3/4" = 1'-0"

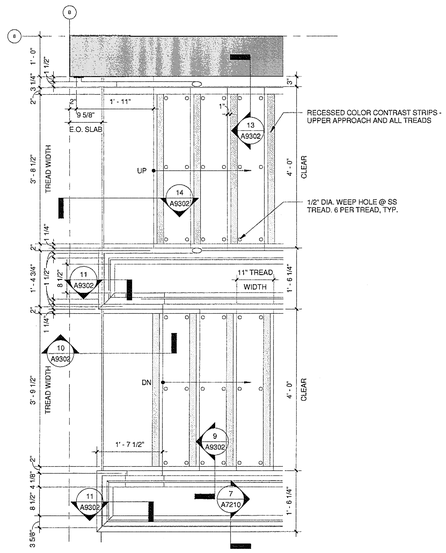

8 STAIR 4 LANDING HEAD
A2222 A2801 3/4" = 1'-0"

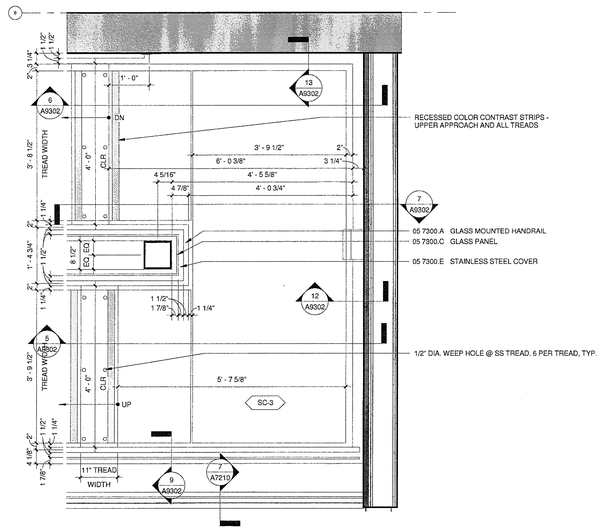

5 STAIR 4 ENLARGED LANDING
A2222 A2801 3/4" = 1'-0"

FOR ALL STAINLESS STEEL EXTERIOR STAIRS:
1/2" DIA. PRE-PUNCHED WEEP HOLES @ SS TREAD, 6 PER TREAD, TYP.
1/2" DIA. PRE-PUNCHED WEEP HOLES @ SS LANDING, TYP.

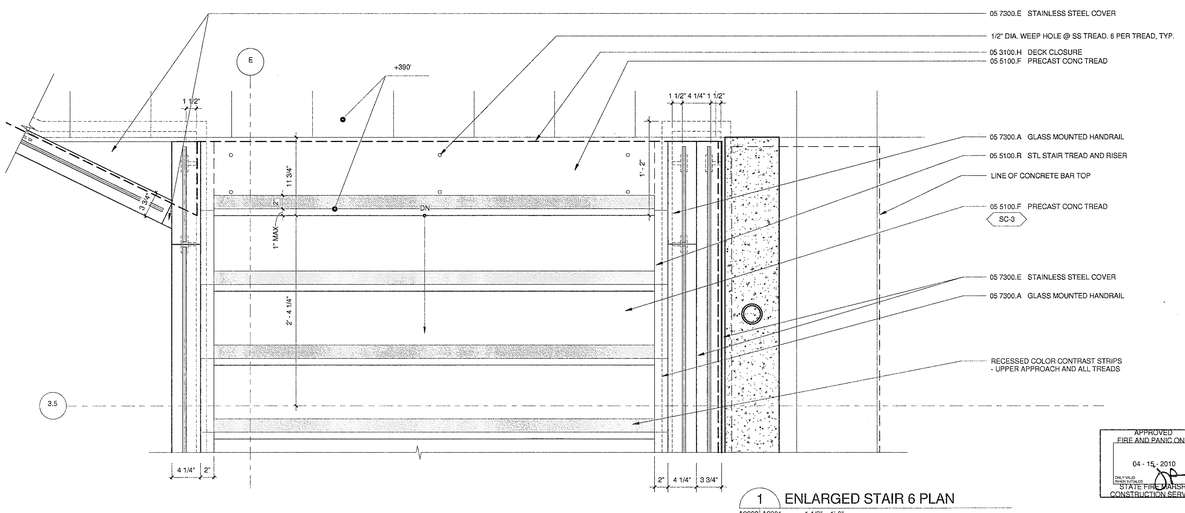

1 ENLARGED STAIR 6 PLAN
A2223 A2801 1 1/2" = 1'-0"

U.C.S.D.
4/21/10 DATE
PRELIMINARY DRAWINGS
PROGRESS DRAWINGS
REVIEW DRAWINGS
CONSTRUCTION DRAWINGS

APPROVED FIRE AND PANIC ONLY
04 - 15 - 2010
STATE FIRE MARSHAL CONSTRUCTION SERVICES

COPYRIGHT © FENTRESS ARCHITECTS

ISSUED FOR	DATE
BID PK #1 100 CD	02.16.09
BID PK #2 100 CD	03.26.09
100% CD	05.08.09
ADA REVIEW	08.26.09
CD-4	01.07.10
RFI 0066	02.02.10
CD-4	04-15-10

SANFORD CONSORTIUM FOR REGENERATIVE MEDICINE

2880 TORREY PINES SCENIC DRIVE
LA JOLLA, CALIFORNIA 92037

CONSULTANT

Lankford/Phelps Consortium LLC
655 West Broadway Suite 1400 San Diego, CA 92101
619/702-0500 619/702-0505 fax

FENTRESS | ARCHITECTS
412 Broadway Denver CO 80203
303/733-1666

DAVIS DAVIS ARCHITECTS
3620 Fourth Avenue San Diego, CA 92103

STAMP
LICENSED ARCHITECT
Jeffrey W Olson
No. C-31761
REN. 03/31/11
STATE OF CALIFORNIA

SHEET NAME
ENLARGED STAIR PLANS

DRAWN BY: Author

PROJECT #: 200725.000

SHEET NUMBER
A2801

4/15/2010 2:14:32 PM
C:\FA Revit Projects\200725 SCRM Jesse Dz.rvt

Warning: It is a violation of the law for any person, unless acting under the direction of a licensed architect, to alter an item in any way. If an item in this document is altered, the altering architect, if other than the architect of record, shall affixto the item his seal and the notation "altered by" follows by his signiture and the date of such alteration, and the specific description of the alteration.