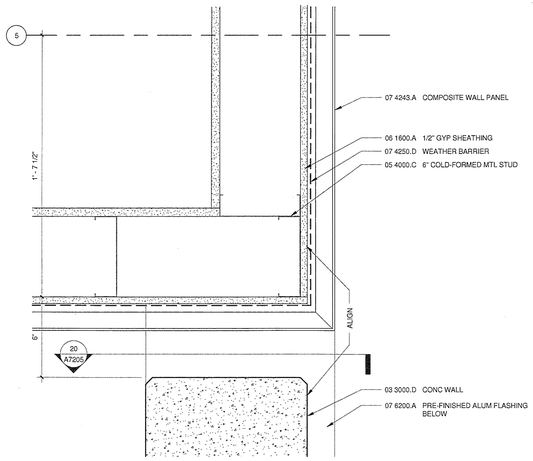

8 PLAN DETAIL AT ROOF
A2222 A7303 3" = 1'-0"

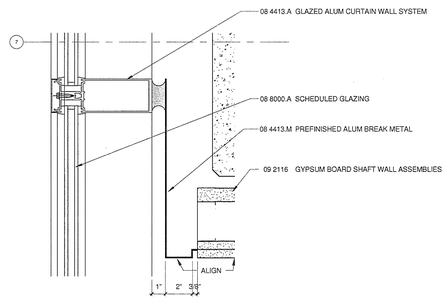

7 BRK MTL AT COL. WRAP
A7101 A7303 3" = 1'-0"

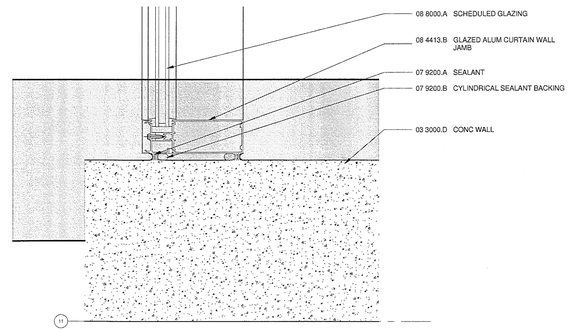

3 EXT PLAN DTL @ CURTAINWALL
A2211 A7303 3" = 1'-0"

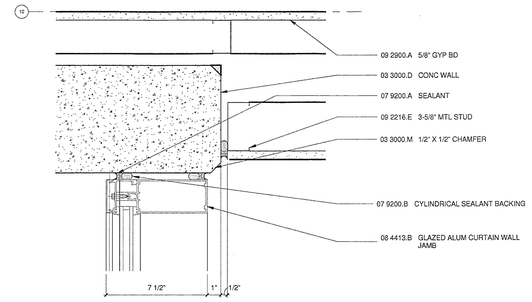

4 EXT PLAN DTL @ CURTAINWALL
A2211 A7303 3" = 1'-0"

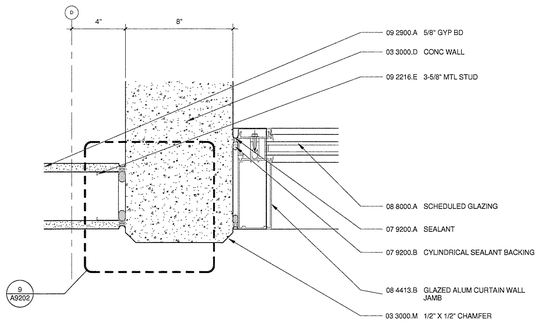

10 EXTERIOR PLAN DETAIL
A2211 A7303 3" = 1'-0"

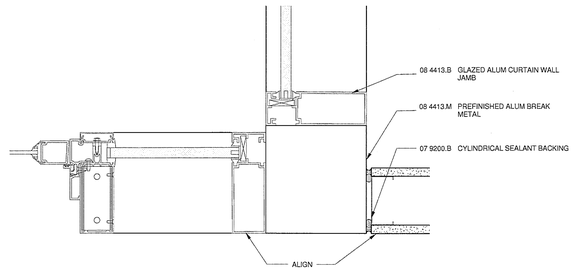

6 EXT PLAN DTL @ CURTAINWALL
A2221 A7303 3" = 1'-0"

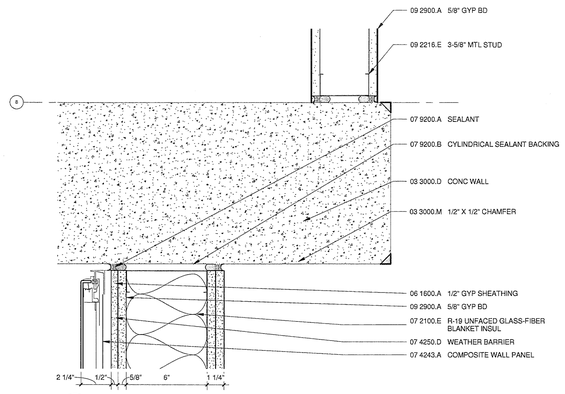

2 EXT PLAN DTL @ CONCRETE
A2212 A7303 3" = 1'-0"

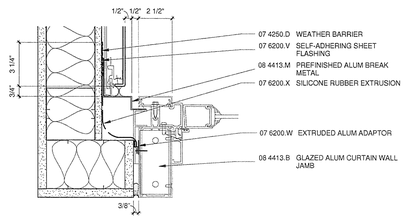

9 E .T PLAN DETAIL
A7101 A7303 3" = 1'-0"

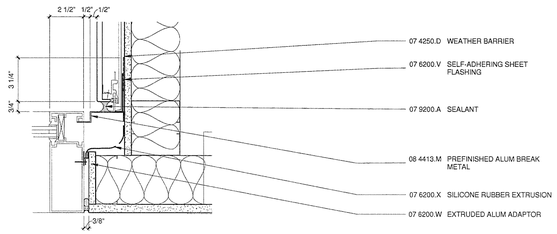

5 EXT PLAN DETAIL
A7101 A7303 3" = 1'-0"

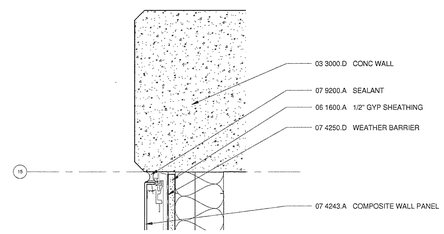

1 EXT PLAN DTL, MTL PANEL @ CONC
A7101 A7303 3" = 1'-0"

U.C.S.D.
DATE
PRELIMINARY DRAWINGS ☐
PROGRESS DRAWINGS ☐
REVIEW DRAWINGS ☐
CONSTRUCTION DRAWINGS ☐

U.C.S.D.
1/27/10
DATE
PRELIMINARY DRAWINGS ☐
PROGRESS DRAWINGS ☐
REVIEW DRAWINGS ☐
CONSTRUCTION DRAWINGS ☐

APPROVED
FIRE AND PANIC ONLY
01-28-10
DATE
OFFICE OF STATE FIRE MARSHAL
STATE FIRE MARSHAL
CONSTRUCTION SERVICES

COPYRIGHT ©
FENTRESS ARCHITECTS

ISSUED FOR	DATE
100% CD	05.08.09
CD-3	01.07.10

SANFORD CONSORTIUM FOR REGENERATIVE MEDICINE

2880 TORREY PINES SCENIC DRIVE
LA JOLLA, CALIFORNIA 92037

CONSULTANT

LankfordPhelps Consortium LLC
Engineering Services for Construction
619-702-5555 619-555-1555 Fax

FENTRESS | ARCHITECTS
421 Broadway, Denver, CO 80203
303.722.1000

DAVIS DAVIS ARCHITECTS
3641 Fifth Avenue, San Diego, CA 92103

STAMP
LICENSED ARCHITECT
Jeffrey W Olson
No. C-31761
REN. 03/31/11
STATE OF CALIFORNIA

SHEET NAME
EXTERIOR LARGE SCALE PLAN DETAILS

DRAWN BY: Author

PROJECT #:200725.000

SHEET NUMBER
A7303

1/25/2010 12:10:28 PM
C:\Revit Projects\200725 SDCRM_Jaime 02.rvt

Warning: It is a violation of the law for any person, unless acting under the direction of a licensed architect, to alter an item in any way. If an item in this document is altered, the altering architect, if other than the architect of record, shall affix to the item his seal and the notation "altered by" follows by his signiture and the date of such alteration, and the specific description of the alteration.