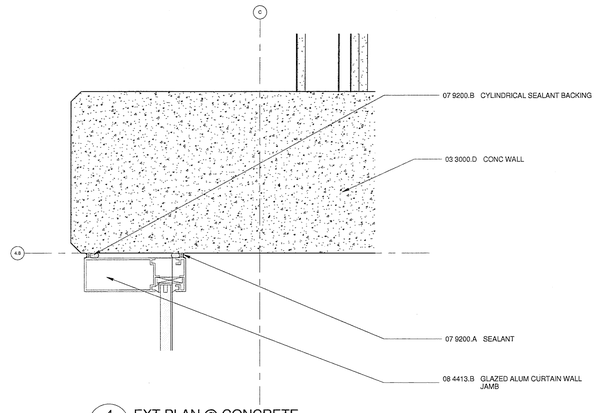

4 EXT PLAN @ CONCRETE
A2222 A7304 3" = 1'-0"

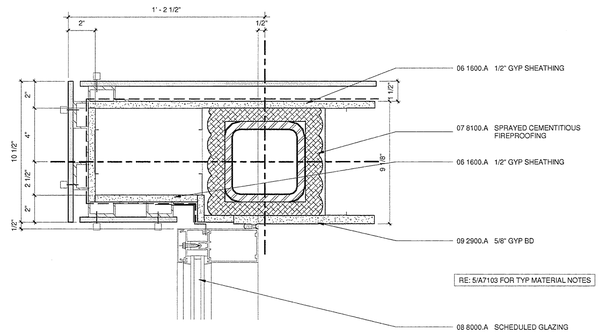

11 TYP. PLAN DTL. @ ALL PODS
A2601 A7304 3" = 1'-0"

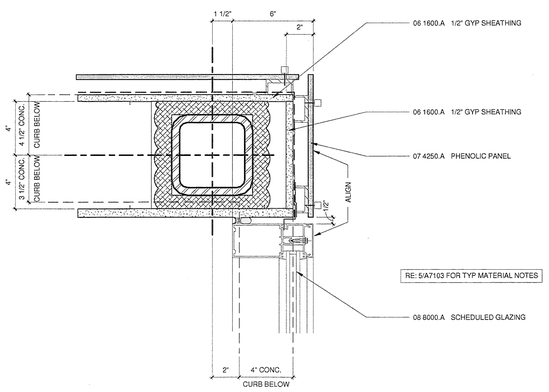

7 TYP. PLAN DTL. @ SENIOR POD
A2601 A7304 3" = 1'-0"

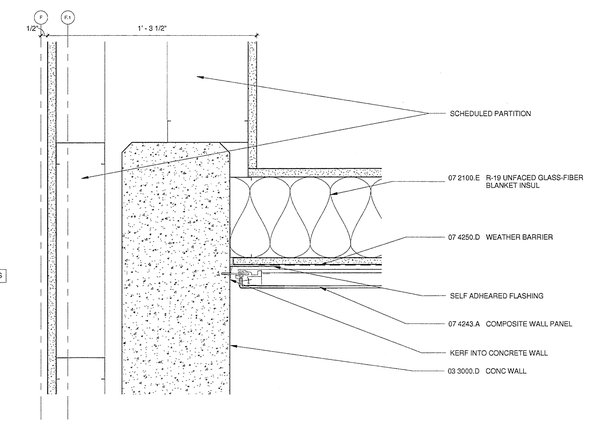

3 EXT PLAN DTL @ CONCRETE
A2222 A7304 3" = 1'-0"

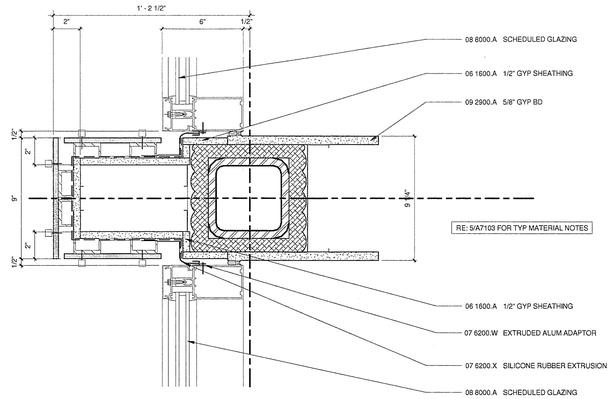

10 TYP. PLAN DTL. @ JUNIOR POD
A2601 A7304 3" = 1'-0"

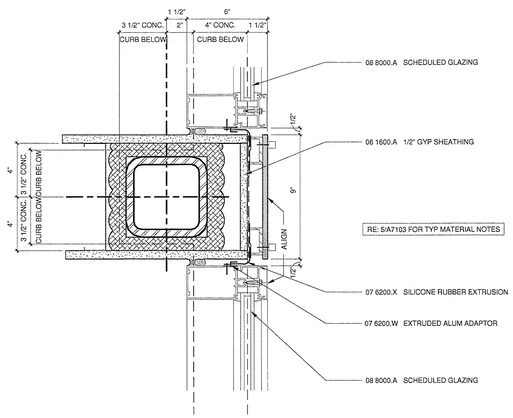

6 TYP. PLAN DTL. @ JUNIOR POD
A2601 A7304 3" = 1'-0"

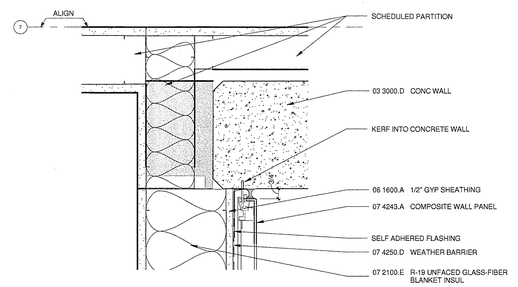

2 EXT PLAN DTL @ CONCRETE
A2222 A7304 3" = 1'-0"

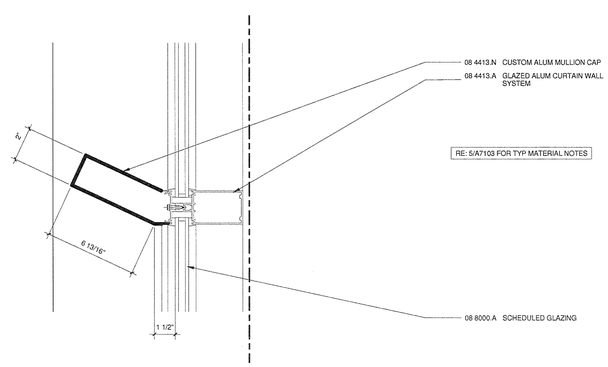

9 TYP. PLAN DTL. @ CUSTOM SNAP
A2601 A7304 3" = 1'-0"

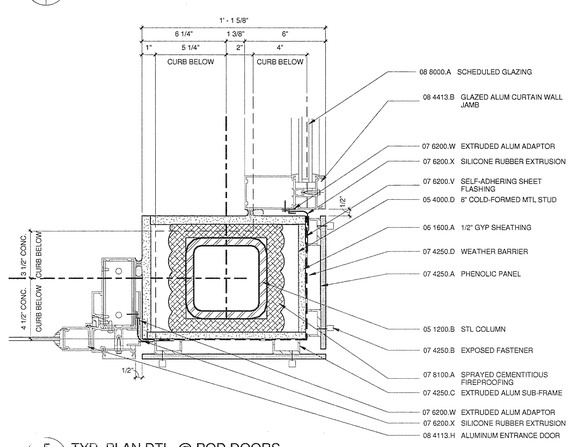

5 TYP. PLAN DTL. @ POD DOORS
A2601 A7304 3" = 1'-0"

U.C.S.D.	
PRELIMINARY DRAWINGS	☐
PROGRESS DRAWINGS	☐
REVIEW DRAWINGS	☐
CONSTRUCTION DRAWINGS	☑

DATE 2/3/10

APPROVED FIRE AND PANIC ONLY
01-28-10
ON FILING DETAINED
DATE FIRE MARSHAL
C. TRUCTION SERVICES

COPYRIGHT @ FENTRESS ARCHITECTS

ISSUED FOR	DATE
BID PK #1 80 CD	12.01.08
BID PK #1 100 CD	02.16.09
BID PK #2 100 CD	03.26.09
100% CD	05.08.09
CD-3	01.07.10

SANFORD CONSORTIUM FOR REGENERATIVE MEDICINE

2880 TORREY PINES SCENIC DRIVE
LA JOLLA, CALIFORNIA 92037

CONSULTANT

LankfordPhelps Consortium LLC
838 Mission Bayview, Suite 1 and San Diego, CA 92121
619.793.9000 619.793.9000 Fax

FENTRESS | ARCHITECTS
421 Broadway Denver, CO 80203
303.297.0400

DAVIS ARCHITECTS
3990 Fifth Avenue San Diego, CA 92103

STAMP
LICENSED ARCHITECT
Jeffrey W Olson
No. C-31761
REN. 03/31/11
STATE OF CALIFORNIA

SHEET NAME:
EXTERIOR LARGE SCALE PLAN DETAILS

DRAWN BY: Author
PROJECT #: 2[illegible]5.000
SHEET NUMBER:
A7304

1/25/2010 10:10:59 PM
C:\Revit Projects\200725 SCCRM_Jesse Dz.rvt

Warning: It is a violation of the law for any person, unless acting under the direction of a licensed architect, to alter an item in any way. If an item in this document is altered, the altering architect, if other than the architect of record, shall affixto the item his seal and the notation "altered by" follows by his signiture and the date of such alteration, and the specific description of the alteration.