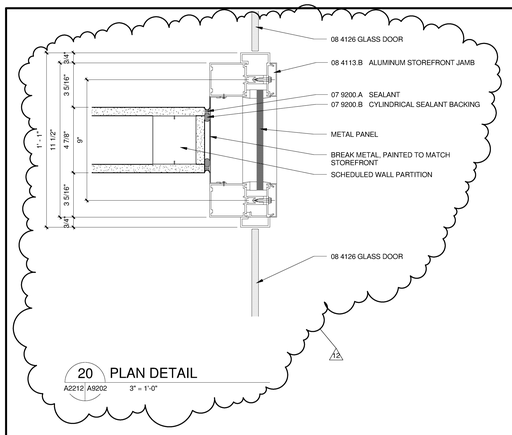

20 PLAN DETAIL
A2212 A9202 3" = 1'-0"

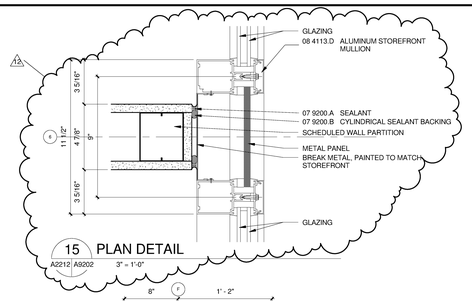

15 PLAN DETAIL
A2212 A9202 3" = 1'-0"

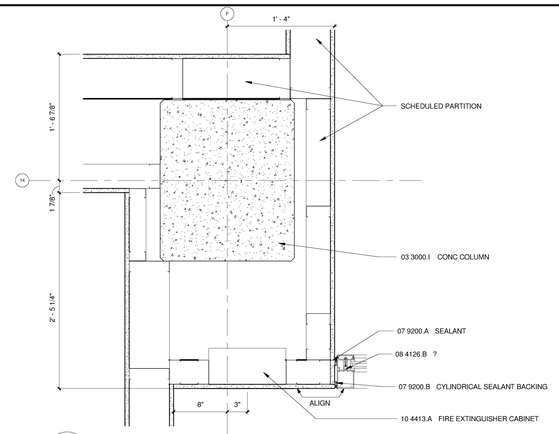

10 PLAN DETAIL
A2221 A9202 1 1/2" = 1'-0"

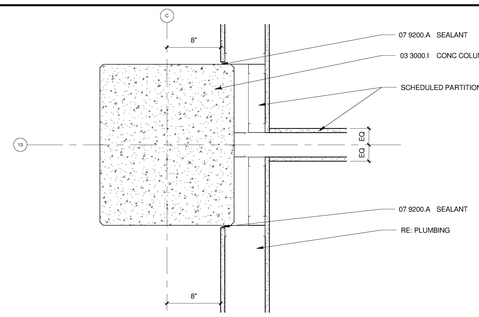

5 PLAN DETAIL, TYP.
A2211 A9202 1 1/2" = 1'-0"

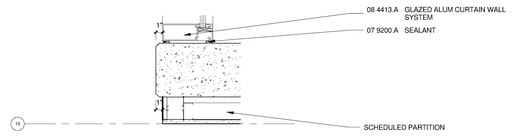

19 PLAN DETAIL
A2242 A9202 1 1/2" = 1'-0"

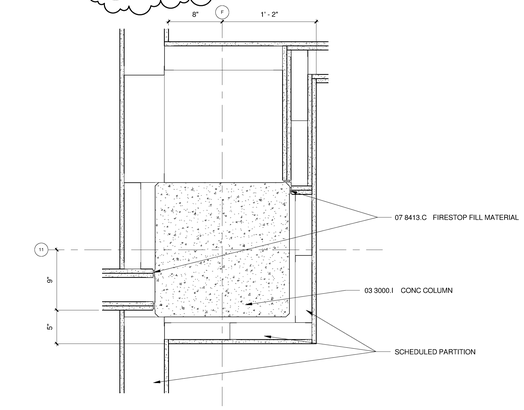

14 PLAN DETAIL
A2241 A9202 1 1/2" = 1'-0"

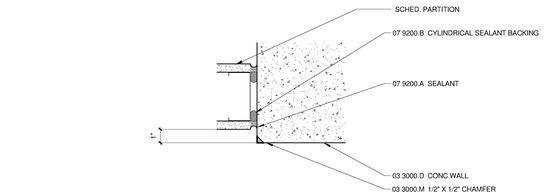

9 TYP. GYP WALL TO CONC.
A7303 A9202 3" = 1'-0"

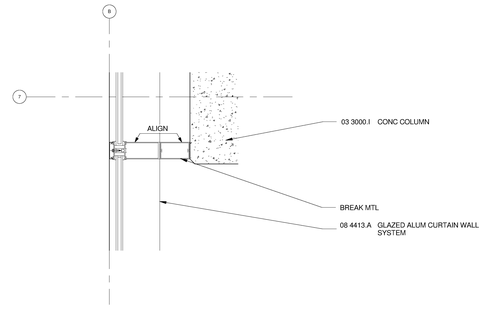

4 PLAN DETAIL
A2212 A9202 1 1/2" = 1'-0"

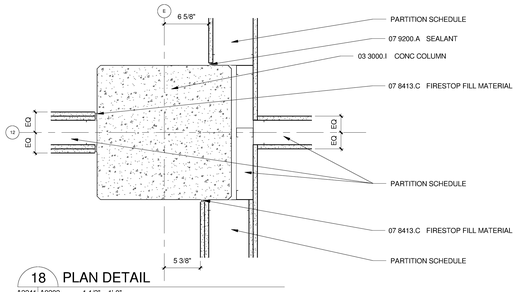

18 PLAN DETAIL
A2241 A9202 1 1/2" = 1'-0"

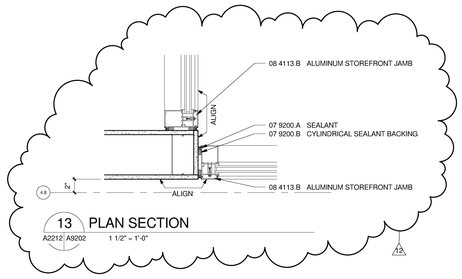

13 PLAN SECTION
A2212 A9202 1 1/2" = 1'-0"

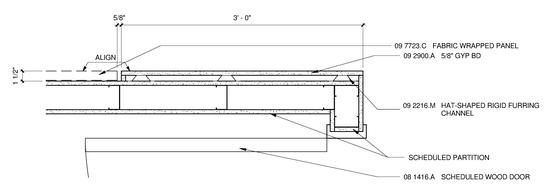

8 PLAN DETAIL
A2213 A9202 1 1/2" = 1'-0"

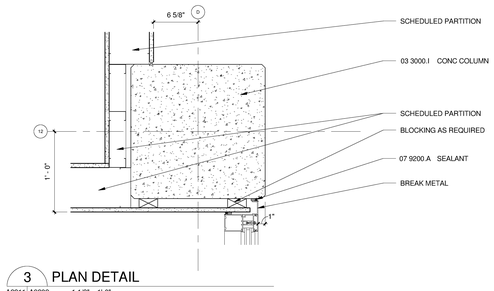

3 PLAN DETAIL
A2211 A9202 1 1/2" = 1'-0"

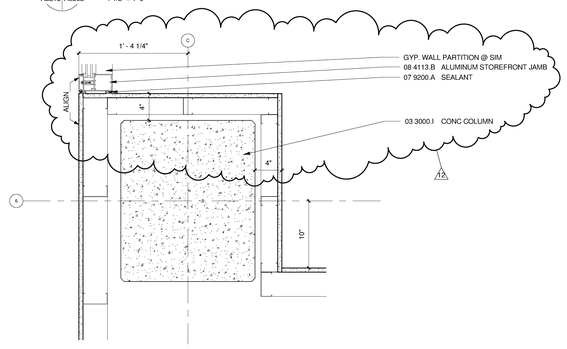

7 PLAN DETAIL
A2212 A9202 1 1/2" = 1'-0"

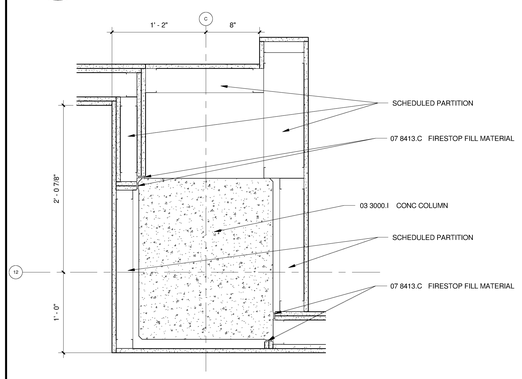

17 PLAN DETAIL
A2241 A9202 1 1/2" = 1'-0"

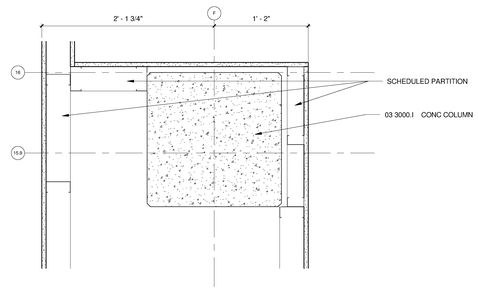

12 PLAN DETAIL
A2221 A9202 1 1/2" = 1'-0"

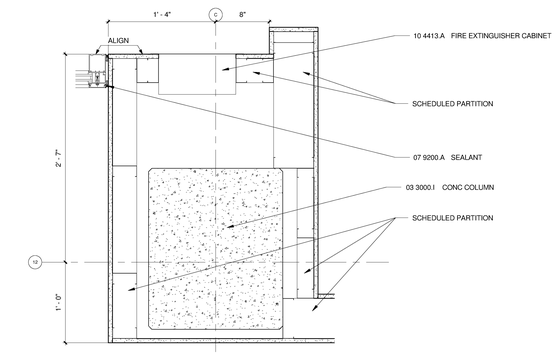

2 PLAN DETAIL
A2211 A9202 1 1/2" = 1'-0"

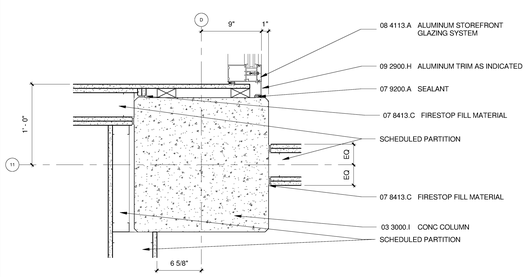

16 PLAN DETAIL
A2241 A9202 1 1/2" = 1'-0"

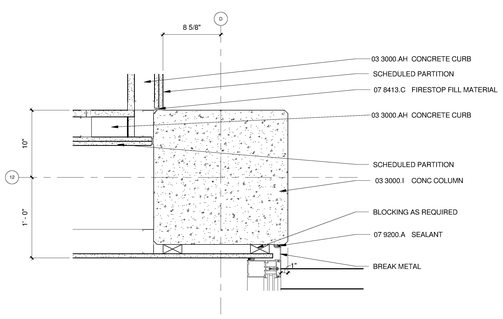

11 PLAN DETAIL
A2221 A9202 1 1/2" = 1'-0"

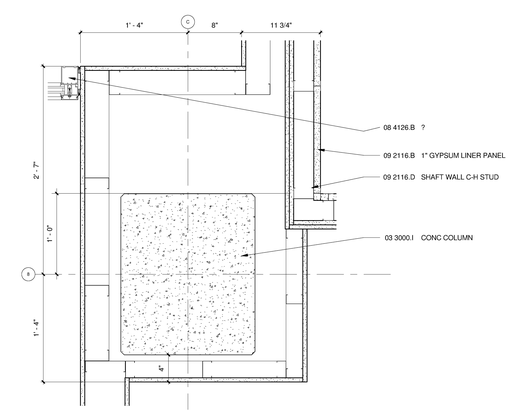

6 PLAN DETAIL
A2212 A9202 1 1/2" = 1'-0"

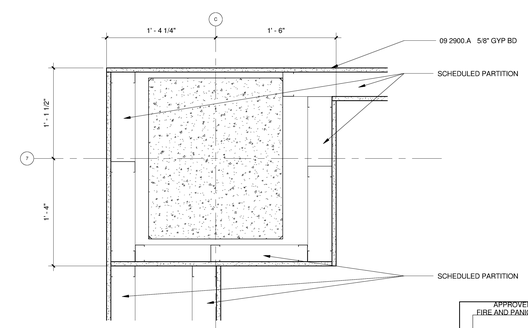

1 PLAN DETAIL
A2212 A9202 1 1/2" = 1'-0"

APPROVED
FIRE AND PANIC ONLY
04 - 15 - 2010
ONLY VALID WHEN STAMPED
STATE FIRE MARSHAL CONSTRUCTION SERVICES

COPYRIGHT @
FENTRESS ARCHITECTS

ISSUED FOR	DATE
100% CD	05.08.09
CD-4	04-15-10
ASI-10	08.13.10

SANFORD CONSORTIUM FOR REGENERATIVE MEDICINE

2880 TORREY PINES SCENIC DRIVE
LA JOLLA, CALIFORNIA 92037

CONSULTANT

Lankford/Phelps Consortium LLC
855 West Broadway, Suite 1400 San Diego, CA 92101
Phone: 619.239.1000 Fax: 619.239.1010

FENTRESS | ARCHITECTS
621 Broadway, Denver, CO 80203
303.722.5000

DAVIS TÉCHT ARCHITECTS
2550 Fifth Avenue San Diego, CA 92103

STAMP

SHEET NAME
INTERIOR PLAN DETAILS

CRAWN BY: Author

PROJECT #: 200725.000

SHEET NUMBER
A9202

8/6/2010 5:28:02 AM
C:\FA Revit Projects\200725 SCRM Jesse Dz.rvt

Warning: It is a violation of the law for any person, unless acting under the direction of a licensed architect, to alter an item in any way. If an item in this document is altered, the altering architect, if other than the architect of record, shall affixto the item his seal and the notation "altered by" follows by his signiture and the date of such alteration, and the specific description of the alteration.