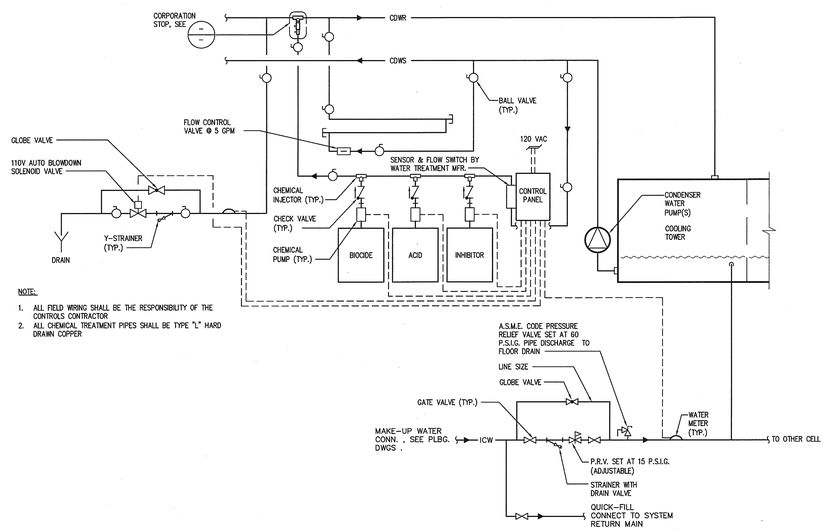

NOTE:

1. ALL FIELD WIRING SHALL BE THE RESPONSIBILITY OF THE CONTROLS CONTRACTOR
2. ALL CHEMICAL TREATMENT PIPES SHALL BE TYPE "L" HARD DRAWN COPPER

COOLING TOWER CHEMICAL FEED SYSTEM — SCALE NONE — 6

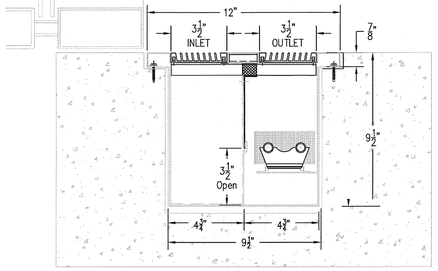

RHU SECTION — SCALE NONE — 1

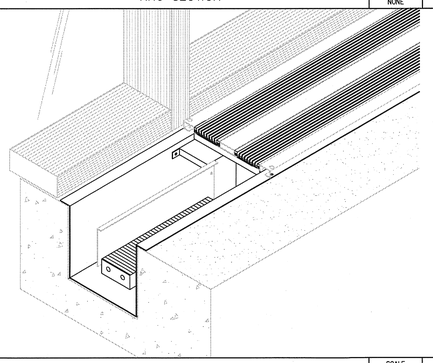

RHU DETAIL — SCALE NONE — 2

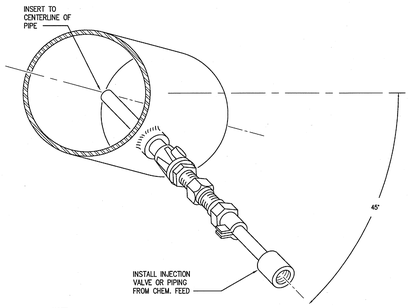

NOTE:
INSTALL CORPORATION STOP BETWEEN HORIZONTAL AND 45° AS SHOWN

CORPORATION STOP — SCALE NONE — 7

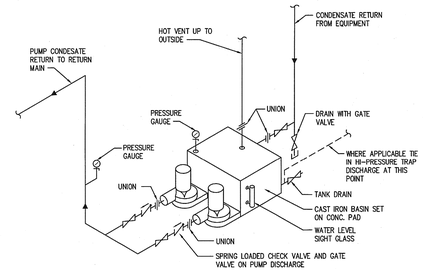

DETAIL FOR DUPLEX CONDENSATE PUMP — SCALE NONE — 3

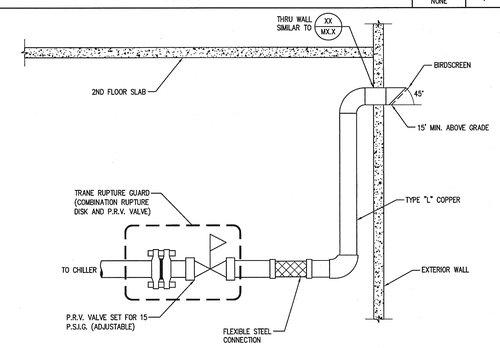

REFRIGERANT RELIEF PIPING — SCALE NONE — 8

NOTE:
1. SEE FLOOR PLANS FOR SIZES
2. SEE PLUMB. FOR ADDITIONAL PIPING

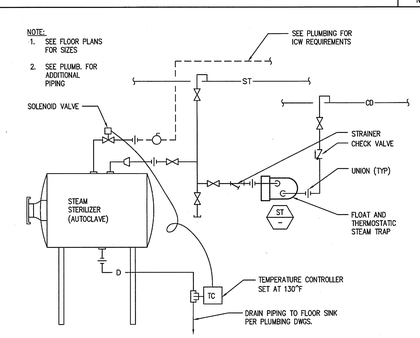

SCALE NONE — 4

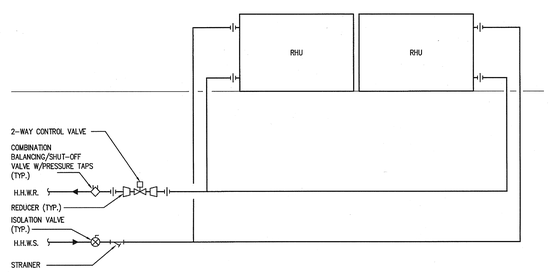

RADIANT HEATING UNIT PIPING — SCALE NONE — 9

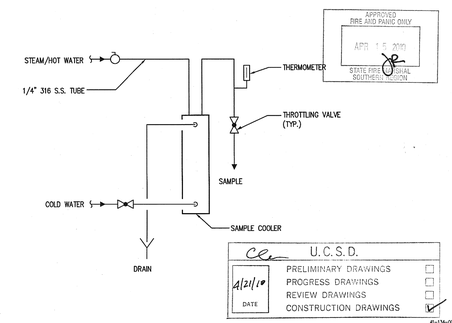

SAMPLE COOLER ASSEMBLY — SCALE NONE — 5

	SCALE	
13	NONE	
14	NONE	
15	NONE	
16	NONE	
17	NONE	
10	NONE	
11	NONE	
12	NONE	

COPYRIGHT © FENTRESS ARCHITECTS

ISSUED FOR	DATE
Pre-Schematic Design	07/14/2008
Schematic Design	07/28/2008
BID PK #1	10/06/2008
50% Progress	10/24/2008
BID PK #1 60 CD	12/01/2008
BID PK #1 100 CD	02/16/2009
BID PK #2 100 CD	03/26/2009
100% CD	05/08/2009
CD 4	01/07/2010
COB 1 (1)	02/26/2010
COB 2 (1)	02/26/2010
CD 4	04/15/2010

SANFORD CONSORTIUM FOR REGENERATIVE MEDICINE

2880 TORREY PINES SCENIC DRIVE
LA JOLLA, CALIFORNIA 92037

CONSULTANT
Smith Hinchman & Grylls
9191 Towne Centre Drive, Suite 600
San Diego, CA 92121
858.350.1500 FAX 858.637.5565
SHGA# 200025A

Lankford/Phelps Consortium LLC
4225 Executive Square, Suite 1400
La Jolla, CA 92037
858.550.0900 FAX 858.550.0901

FENTRESS | ARCHITECTS
421 Broadway, Denver, CO 80203
303.722.2000

DAVIS LANGDON
Architecture & Engineering
2401 Kerner Blvd., San Rafael, CA 94901
415.485.1700

STAMP
REGISTERED PROFESSIONAL ENGINEER
Ali M. Zamzo
No. M 22035
Exp. 9-30-10
MECHANICAL
STATE OF CALIFORNIA

SHEET NAME
MECHANICAL DETAILS

DRAWN BY: Author
PROJECT #: 200725.000
SHEET NUMBER
M5003

1/22/2008 4:52:10 PM
File Path:

Warning: It is a violation of the law for any person, unless acting under the direction of a licensed architect, to alter an item in any way. If an item in this document is altered, the altering architect, if other than the architect of record, shall affixto the item his seal and the notation "altered by" follows by his signiture and the date of such alteration, and the specific description of the alteration.