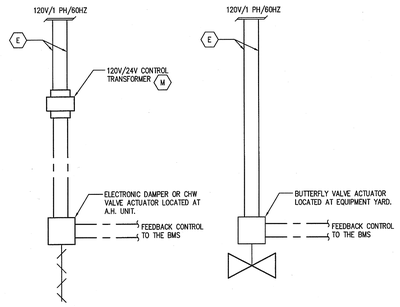

ELECTRONIC VALVE/DAMPER WIRING — SCALE NONE — 14

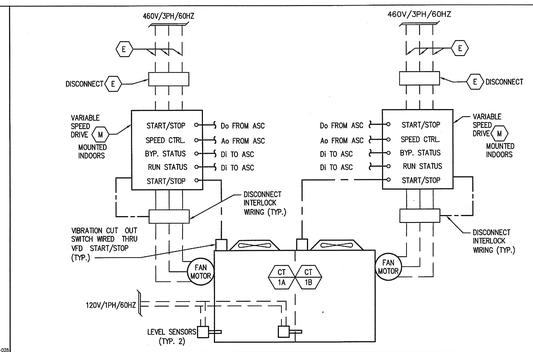

COOLING TOWER WIRING — SCALE NONE — 9

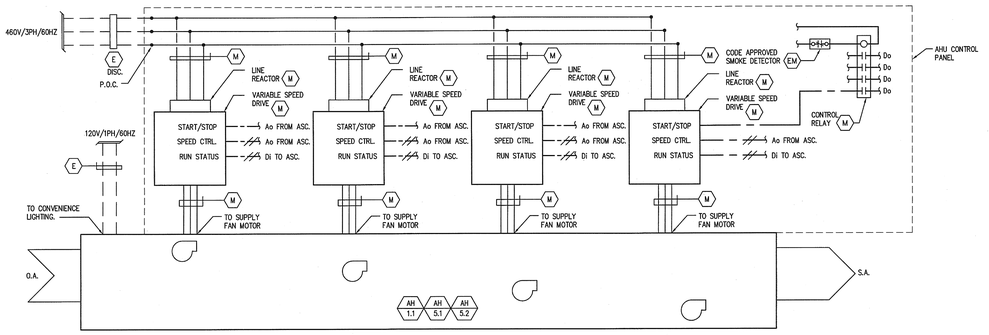

LAB AIR HANDLER WIRING — SCALE NONE — 1

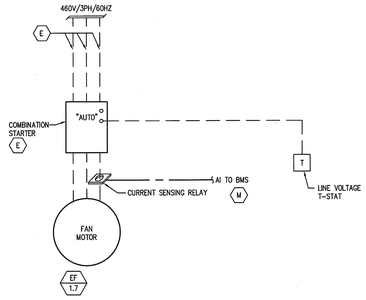

THREE PHASE FAN WIRING — SCALE NONE — 15

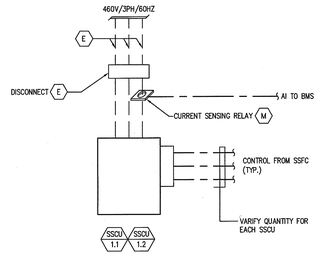

SPLIT SYSTEM OUTDOOR CONDENSING UNIT — SCALE NONE — 10

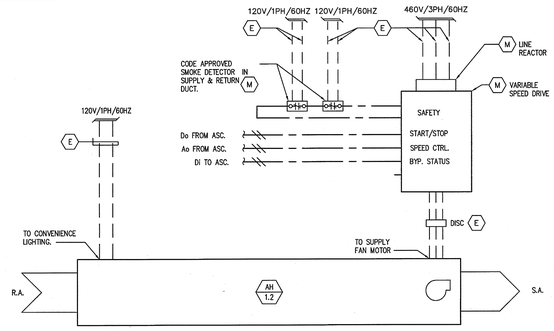

AUDITORIUM AIR HANDLER WIRING — SCALE NONE — 2

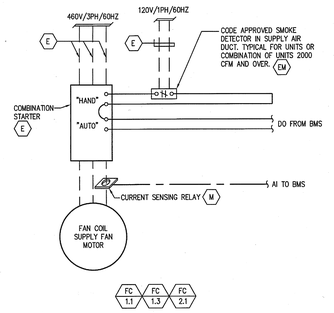

FAN COIL UNIT SUPPLY FAN WIRING — SCALE NONE — 16

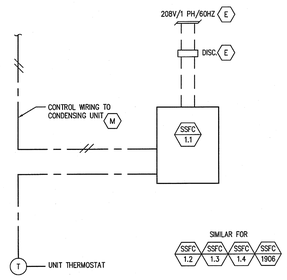

SPLIT SYSTEM INDOOR FAN COIL WIRING — SCALE NONE — 11

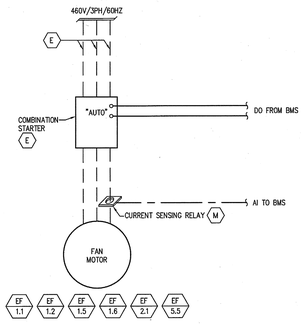

3 PHASE FAN WIRING — SCALE NONE — 6

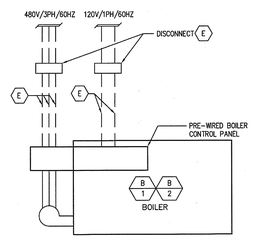

HEATING HOT WATER BOILER WIRING — SCALE NONE — 3

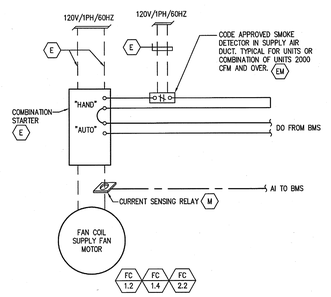

FAN COIL UNIT SUPPLY FAN WIRING — SCALE NONE — 17

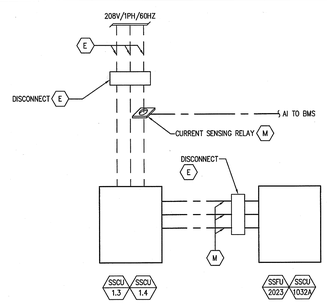

SCALE NONE — 12

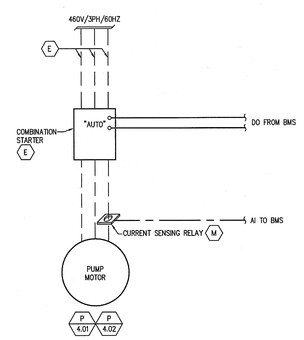

3 PHASE PUMP WIRING — SCALE NONE — 7

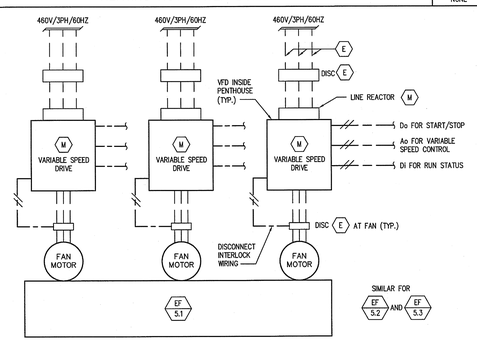

LAB EXHAUST FAN WIRING — SCALE NONE — 4

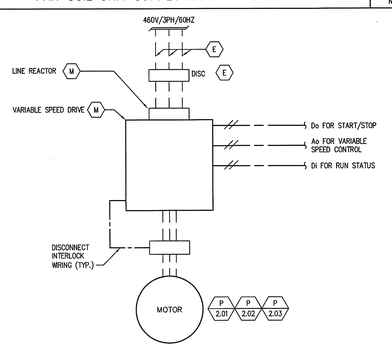

PUMP REMOTE VFD WIRING — SCALE NONE — 18

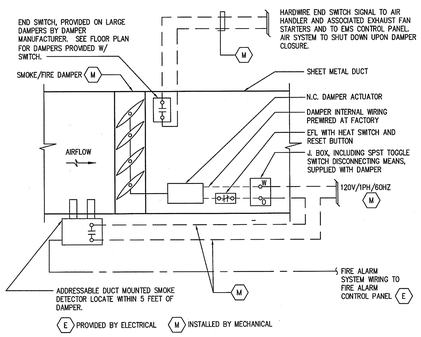

SMOKE/FIRE DAMPER DUCT DETECTOR WIRING — SCALE NONE — 13

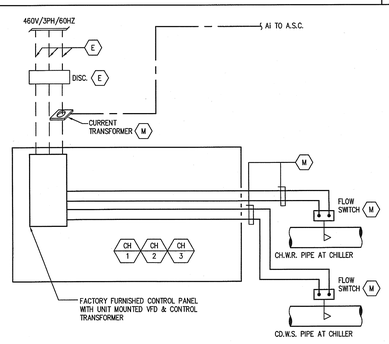

CHILLER WIRING — SCALE NONE — 8

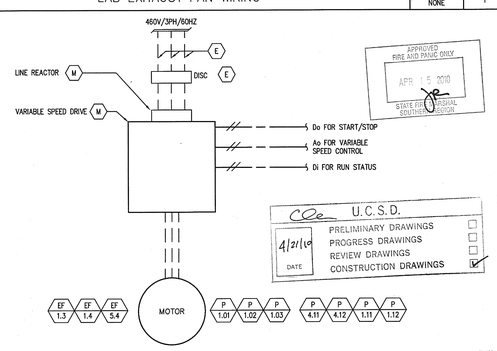

FAN OR PUMP V.F.D. WIRING — SCALE NONE — 5

COPYRIGHT © FENTRESS ARCHITECTS

ISSUED FOR	DATE
Pre-Schematic Design	07/14/2008
Schematic Design	07/28/2008
BID PK #1	10/06/2008
50% Progress	10/24/2008
BID PK #1 60 CD	12/01/2008
BID PK #1 100 CD	02/16/2009
BID PK #2 100 CD	03/26/2009
100% CD	05/08/2009
CD 4	01/07/2010
COB 1 △1	02/26/2010
COB 2 △1	02/26/2010
CD 4	04/15/2010

SANFORD CONSORTIUM FOR REGENERATIVE MEDICINE

2880 TORREY PINES SCENIC DRIVE
LA JOLLA, CALIFORNIA 92037

CONSULTANT
xnth
X-nth Inc./San Diego - North
10180 Telesis Court
San Diego, CA 92121
858.597.0555 | fax 858.597.0505
xnthinc 858884

LansfordPhelps Consortium LLC
6935 Mira Mesa Blvd., Suite 100 San Diego, CA 92121
619.252.0000 619.252.0001 fax

FENTRESS | ARCHITECTS
421 Broadway, Denver, CO 80203
303.892.1666
DAVIS DAVIS ARCHITECTS
3847 Fifth Avenue San Diego, CA 92103

STAMP
PROFESSIONAL ENGINEER
No. M 23355
Exp. 3-31-10
MECHANICAL
STATE OF CALIFORNIA

SHEET NAME
WIRING AND CONTROL DIAGRAMS

DRAWN BY: Author

PROJECT #: 200725.000

SHEET NUMBER
M6001

12/22/2009 4:52:10 PM
E:\Temp\AcPublish_2016\{5E8F1B0A-0A0C-4A8B-A4D0-0A0C0A0B0A0C}.dwt

Warning: It is a violation of the law for any person, unless acting under the direction of a licensed architect, to alter an item in any way. If an item in this document is altered, the altering architect, if other than the architect of record, shall affixto the item his seal and the notation "altered by" follows by his signature and the date of such alteration, and the specific description of the alteration.