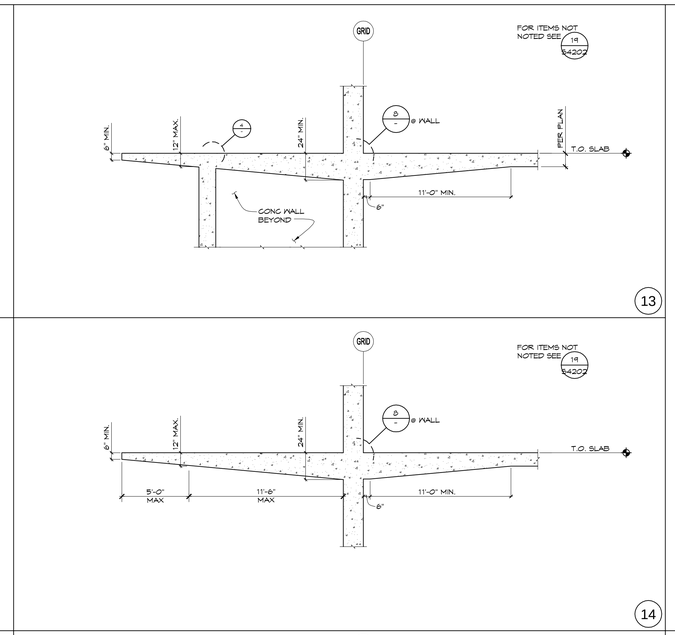

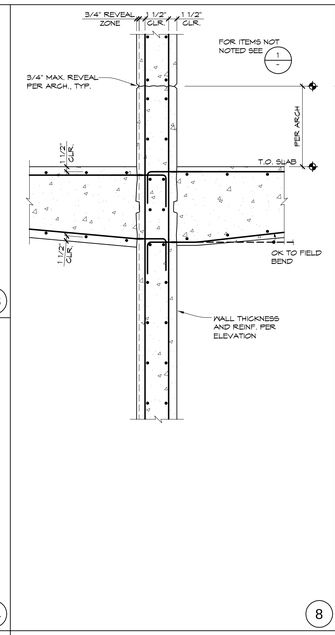

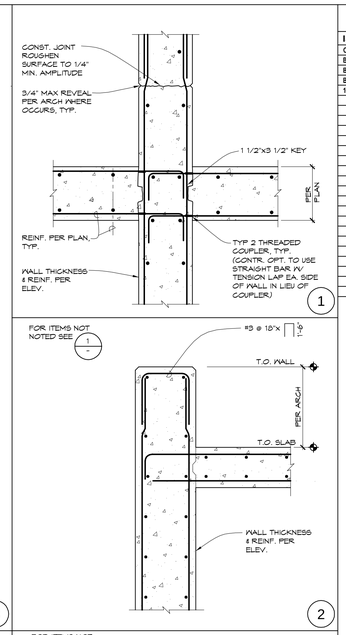

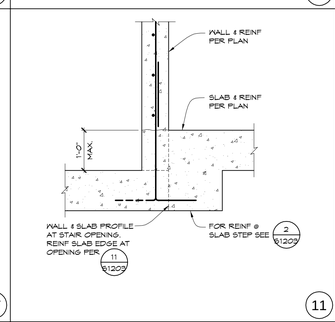

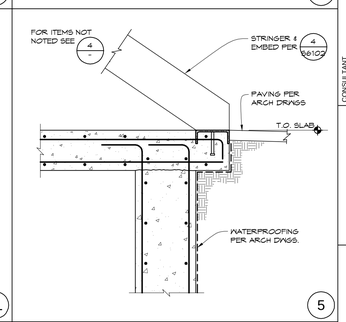

NOT USED 23

NOT USED 17

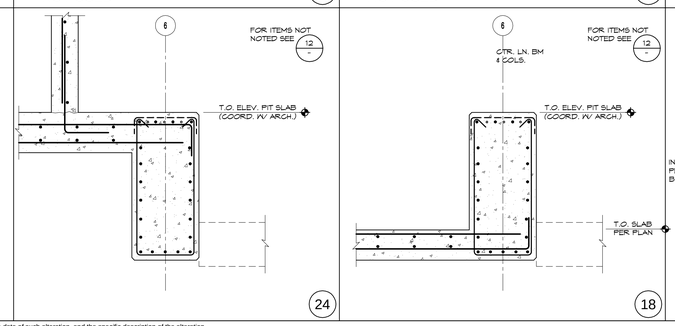

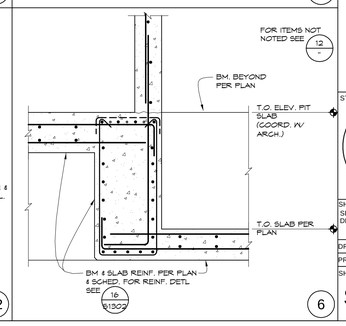

COPYRIGHT ©
FENTRESS ARCHITECTS

ISSUED FOR	DATE
CD-2 CODE REVIEW	11.17.08
BD PK #1 80 CD	12.01.08
BD PK #1 100 CD	02.16.09
BD PK #2 100 CD	03.26.09
100% CD	05.08.09

SANFORD CONSORTIUM FOR REGENERATIVE MEDICINE

2880 TORREY PINES SCENIC DRIVE
LA JOLLA, CALIFORNIA 92037

CONSULTANT

HOPE ENGINEERING ©2004
HOPE ENGINEERING
1201 Third Avenue
Suite 2200
San Diego, Ca 92101
TEL: (619) 232-4073
FAX: (619) 238-0408

Lankford/Phelps Consortium LLC
Lankford/Phelps Consortium LLC
600 West Broadway, Suite 1400 San Diego, CA 92101
619.702.5000 619.702.5001 (fax)

FENTRESS | ARCHITECTS
FENTRESS | ARCHITECTS
410 Broadway, Denver, CO 80203
303.722.7000

DAVIS LANGDON ADAM ARCHITECTS
DAVIS LANGDON ADAM ARCHITECTS
3401 Fifth Avenue San Diego, CA 92103

STAMP

REGISTERED PROFESSIONAL ENGINEER
JAMES B. HOPE JR.
No. 40784
Exp. 3-31-11
CIVIL
STATE OF CALIFORNIA

SHEET NAME
SECTIONS AND DETAILS

DRAWN BY:

PROJECT #: 208005.000

SHEET NUMBER
S4201

Warning: It is a violation of the law for any person, unless acting under the direction of a licensed architect, to alter an item in any way. If an item in this document is altered, the altering architect, if other than the architect of record, shall affixto the item his seal and the notation "altered by" follows by his signiture and the date of such alteration, and the specific description of the alteration.

P:\PROJECTS\2008\208005.00 S D Consortium for Regenerative Medicine\2 Dwg\08005S4201.dwg, 5/5/2009 4:31:04 PM, Alex
File: P:\PROJECTS\2008\208005.00 S D Consortium for Regenerative Medicine\2 Dwg\08005S4201.dwg
Date: May 05, 2009 -- 4:31pm
SCALE: 1/16 OF/R: Alex