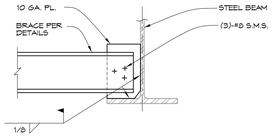

HORIZONTAL
BRACE TO BEAM CONNECTION (26)

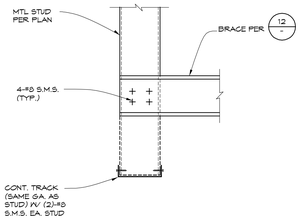

TYP. HORIZONTAL BRACE (21)
7000-200C

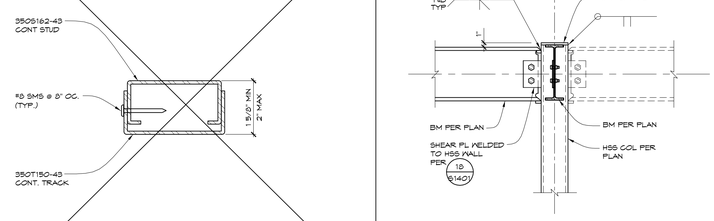

TYPICAL BOX SECTION AT POD ROOF (16)

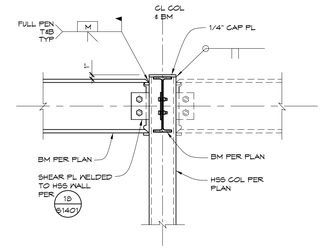

(11)

NOT USED (22)

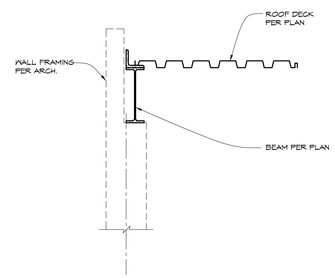

(17)

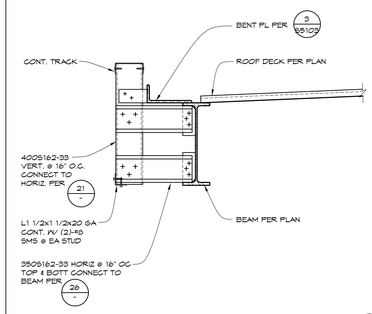

(12)

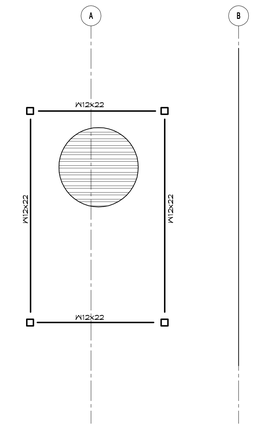

SMALL OFFICE POD ROOF FRAMING PLAN
SCALE 1/4"=1'-0"

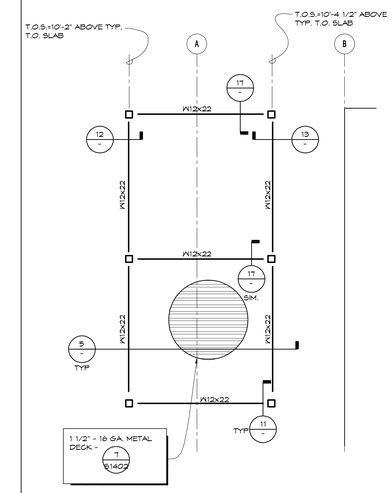

LARGE OFFICE POD ROOF FRAMING PLAN
SCALE 1/4"=1'-0"

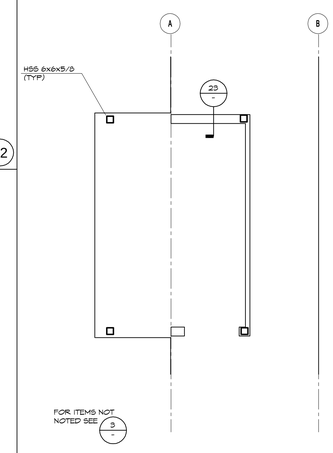

SMALL OFFICE POD FLOOR FRAMING PLAN
SCALE 1/4"=1'-0"
(8)

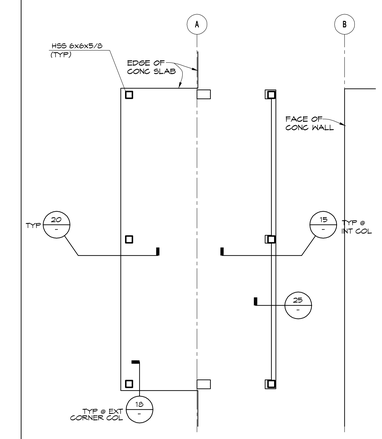

LARGE OFFICE POD FLOOR FRAMING PLAN
SCALE 1/4"=1'-0"
(3)

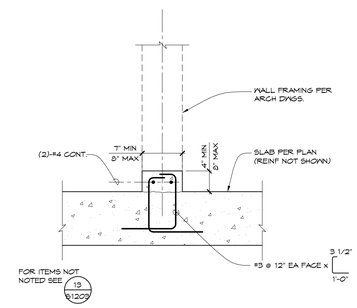

TYP. CURB AT ENTRY SIDE OF POD (23)

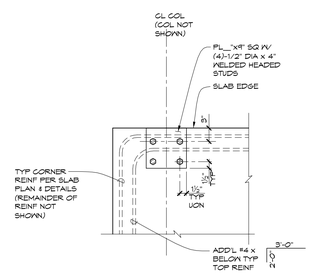

PLAN
(18)

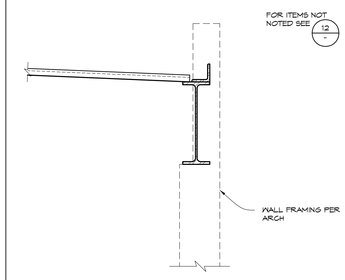

(13)

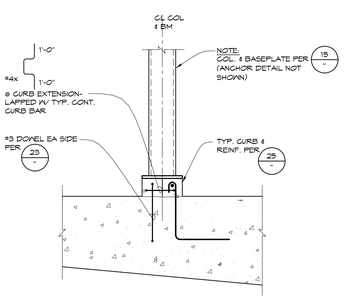

TYP. CURB EXTENSION AT JR. POD CENTER COLUMN (24)

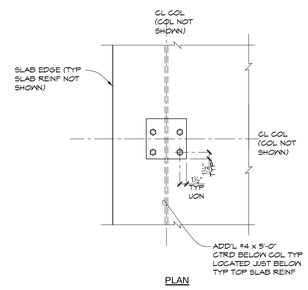

PLAN
(19)

NOT USED (14)

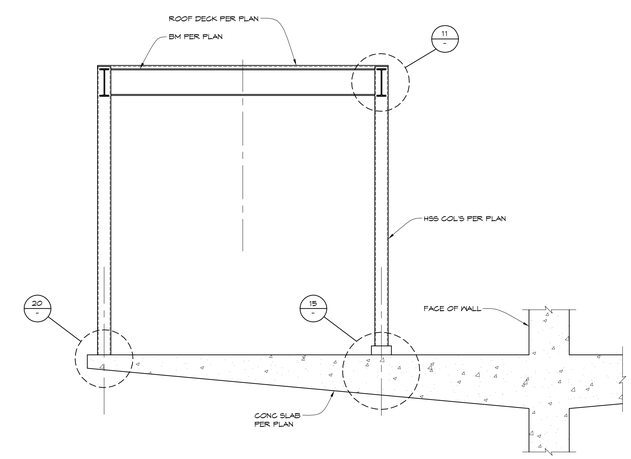

TYPICAL OFFICE POD SECTION (5)

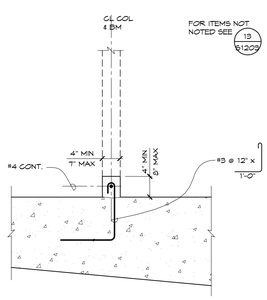

TYP. CURB AT WALKWAY SIDE OF POD (25)

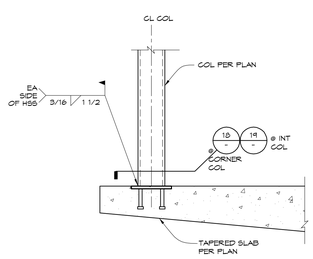

(20)

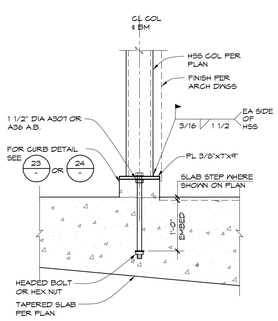

(15)

Warning: It is a violation of the law for any person, unless acting under the direction of a licensed architect, to alter an item in any way. If an item in this document is altered, the altering architect, if other than the architect of record, shall affixto the item his seal and the notation "altered by" follows by his signature and the date of such alteration, and the specific description of the alteration.

I:\PROJECTS\2008\208005.00 S D Consortium for Regenerative Medicine_Dwg\208005S301.dwg
Date: May 05, 2009 — 4:34pm
SCALE: 1/2" DFTR: Alex

COPYRIGHT ©
FENTRESS ARCHITECTS

ISSUED FOR	DATE
BID PK #1 100 DD	10.06.08
50% PROGRESS	10.24.08
CD-2 CODE REVIEW	11.17.08
BD PK #1 80 CD	12.01.08
BD PK #1 100 CD	02.16.09
BD PK #2 100 CD	03.26.09
100% CD	05.08.09

SANFORD CONSORTIUM FOR REGENERATIVE MEDICINE

2880 TORREY PINES SCENIC DRIVE
LA JOLLA, CALIFORNIA 92037

CONSULTANT
HOPE ENGINEERING
HOPE, ENGINEERING ©2005
Suite 300 Phone: (619) 233-4673
Suite 300 FAX: (619) 233-4675
San Diego, Ca. 92101

Lankford/Phelps Consortium LLC
555 West Beech Street, Suite 440 San Diego, CA 92101
619-702-5000 619-702-5001 Fax

FENTRESS | ARCHITECTS
423 Sherman, Denver, CO 80203
303.722.2444

DAVIS DAVIS ARCHITECTS
3267 Fifth Avenue San Diego, CA 92103

STAMP
REGISTERED PROFESSIONAL ENGINEER
CHARLES B. HOPE JR.
No. 40784
Exp. 3-31-11
CIVIL
STATE OF CALIFORNIA

SHEET NAME
SECTIONS AND DETAILS

DRAWN BY:

PROJECT #: 208005.000

SHEET NUMBER
S5301