VOLUME : ONE

INDEX OF DRAWINGS

CS-1	COVER SHEET - VOLUME 1
T0.1	SHEET INDEX
T1.1	TITLE SHEET
T1.2	ACCESSIBILITY NOTES, GUESTROOM MATRIX
T2.0	PROJECT NOTES
T2.1	HEALTH DEPARTMENT NOTES
T2.2	DETERMINATION OF NO HAZARD
T3.1	EXITING PLANS AND PROJECT GENERAL DATA
T3.2	EXITING PLANS AND PROJECT GENERAL DATA
T4.0	WALL TYPES SECTIONS
T4.1	FIRE PENETRATION DETAILS
T5.0	SITE AND BUILDING SIGNAGE
T5.1	ACCESSIBILITY & SIGNAGE REQUIREMENTS HOSIPITALITY

CIVIL

C1.0	GRADING AND DRAINAGE PLAN COVER SHEET
C1.1	GRADING AND DRAINAGE DETAILS AND CROSS SECTIONS
C1.2	SITE DEMOLITION PLAN
C1.3	OVERALL GRADING AND DRAINAGE PLAN
C2.0	PRIVATE WATER AND SEWER PLAN
C2.1	PRIVATE WATER AND SEWER PLAN
C2.1.	SWPPP PLAN
C3.0	PUBLIC FIRE LINE COVER SHEET
C4.0	COVER SHEET - PAVING WITH DRAINAGE
C4.1	DETAILS SHEET
C4.2	OFFSITE DEMOLITION PLAN
C4.3	OFFSITE PAVING PLAN
C4.4	OFFSITE PAVING PLAN
C4.5	OFFSITE PAVING PLAN
C4.6	OFFSITE PAVING PLAN
C5.0	COVER SHEET-MASS GRADING PLAN
C5.1	MASS GRADING PLAN
C5.2	PAINT & SIGNAL PLANS
CS-512	CIVIL STANDARD DETAIL S-512
CS-512.1	S-512 CONSTRUCTION NOTES
CS-512.2	PUBLIC SEWER NOTES

SHORING DESIGN

SOE-0.0	SHORING COVER SHEET
SOE-0.1	SUPPORT OF EXCAVATION NOTES
SOE-1.1	SUPPORT OF EXCAVATION PLAN
SOE-1.2	LIMITS OF SURCHARGE
SOE-2.1	EAST WALL PLAN VIEW & PROFILE
SOE-2.2	SOUTH WALL PLAN VIEW & PROFILE
SOE-2.3	WEST WALL PLAN VIEW & PROFILE
SOE-2.4	NORTH WALL PLAN VIEW & PROFILE
SOE-3.1	TYPICAL WALL SECTIONS
SOE-4.1	TYPICAL WALL DETAILS
SOE-4.2	TYPICAL WALL DETAILS (CONTINUED)

SITE LIGHTING

SLCS-1	COVER SHEET
SLD-3	STREET LIGHT DETAIL
SLP-2	STREET LIGHT PLAN

TRAFFIC SIGNAL

TS-1	TRAFFIC SIGNAL FOUNDATION
TS-2	TRAFFIC SIGNAL EQUIPMENT
TS-3	TRAFFIC SIGNAL WIRING

LANDSCAPING

LP-TS-01	TITLE SHEET
LP-01	PLANTING PLAN
LP-02	PLANTING DETAILS
LI-01	IRRIGATION SHEET
LI-02	IRRIGATION DETAILS
LI-03	IRRIGATION DETAILS
LI-04	IRRIGATION DETAILS
LI-05	IRRIGATION DETAILS
LI-06	IRRIGATION CALCULATIONS
LC-01	CONSTRUCTION SHEET
LC-02	CONSTRUCTION DETAILS

ARCHITECTURAL

A0.1	SITE PLAN
A1.0	BASEMENT FLOOR PLAN
A1.0S	BASEMENT SLAB DIMENSION PLAN
A1.1	GROUND FLOOR PLAN
A1.1S	GROUND FLOOR SLAB DIMENSION PLAN
A1.2	SECOND FLOOR PLAN
A1.2S	SECOND FLOOR SLAB DIMENSION PLAN
A1.3	THIRD FLOOR PLAN
A1.3S	THIRD FLOOR SLAB DIMENSION PLAN
A1.4	FOURTH FLOOR PLAN
A1.4S	FOURTH FLOOR SLAB DIMENSION PLAN
A1.5	FIFTH FLOOR COURTYARD TOWER PLAN
A1.5S	FIFTH FLOOR SLAB DIMENSION PLAN
A1.6	SIXTH FLOOR COURTYARD TOWER PLAN

ARCHITECTURAL (CONT.)

A1.7	SEVENTH FLOOR COURTYARD TOWER PLAN
A1.8	EIGHTH FLOOR COURTYARD TOWER PLAN
A1.9	NINTH FLOOR COURTYARD TOWER PLAN
A1.9S	NINTH FLOOR SLAB DIMENSION PLAN
A1.10	TENTH FLOOR RESIDENCE INN TOWER PLAN
A1.10S	TENTH FLOOR SLAB DIMENSION PLAN
A1.11	ELEVENTH FLOOR RESIDENCE INN TOWER PLAN
A1.12	TWELFTH FLOOR RESIDENCE INN TOWER PLAN
A1.13	THIRTEENTH FLOOR RESIDENCE INN TOWER PLAN
A1.14	FOURTEENTH FLOOR RESIDENCE INN TOWER PLAN
A1.15	FIFTEENTH FLOOR RESIDENCE INN TOWER PLAN
A1.16	SIXTEENTH FLOOR RESIDENCE INN TOWER PLAN
A1.17	SEVENTEENTH FLOOR RESIDENCE INN TOWER PLAN
A1.18	EIGHTEENTH FLOOR RESIDENCE INN TOWER PLAN
A1.19	NINETEENTH FLOOR RESIDENCE INN TOWER PLAN
A1.19S	NINETEENTH FLOOR SLAB DIMENSION PLAN
A1.20	MECHANICAL / PENTHOUSE PLAN
A1.21	ROOF PLAN
A1.22	TAPERED ROOF PLAN
A1.23	ROOF SLAB DIMENSION PLAN
A2.0	BASEMENT FLOOR REFLECTED CEILING PLAN
A2.1	GROUND FLOOR REFLECTED CEILING PLAN
A2.2	SECOND FLOOR REFLECTED CEILING PLAN
A2.3	THIRD FLOOR REFLECTED CEILING PLAN
A2.4	FOURTH FLOOR REFLECTED CEILING PLAN
A2.5	5TH & 7TH FLOOR REFLECTED CLG. (CY) PLAN
A2.6	SIXTH & EIGHTH FLOOR REFLECTED CLG. (CY) PLAN
A2.9	NINTH FLOOR REFLECTED CLG. (CY) PLAN
A2.10	10TH-18TH FLOOR REFLECTED CLG. (RI) PLAN
A2.19	NINETEENTH FLOOR REFLECTED CEILING PLAN
A2.20	PENTHOUSE / ROOF REFLECTED CEILING PLAN
A2.21	CEILING DETAILS
A2.22	CEILING DETAILS
A3.1	EXTERIOR ELEVATIONS
A3.2	EXTERIOR ELEVATIONS
A3.3	EXTERIOR ELEVATIONS
A3.4	ENLARGED PARTIAL ELEVATIONS
A4.1	BUILDING SECTIONS
A4.2	BUILDING SECTIONS
A4.3	BUILDING SECTIONS
A4.4	BUILDING SECTIONS
A4.5	WALL SECTIONS
A4.6	WALL SECTIONS
A4.7	WALL SECTIONS
A4.8	WALL SECTIONS
A4.10	ENLARGED FLOOR PLANS
A5.1	ENLARGED PUBLIC RESTROOMS
A5.2	ENLARGED PUBLIC RESTROOMS
A5.3	COURTYARD - ENLARGED GUESTROOM PLANS
A5.4	COURTYARD - ENLARGED GUESTROOM PLANS
A5.5	COURTYARD - ENLARGED GUESTROOM PLANS
A5.6	RESIDENCE INN - ENLARGED GUESTROOM PLANS
A5.7	RESIDENCE INN - ENLARGED GUESTROOM PLANS
A5.8	RESIDENCE INN - ENLARGED GUESTROOM PLANS
A6.1	GUESTROOM BATH INTERIOR ELEVATIONS
A6.2	GUESTROOM BATH INTERIOR ELEVATIONS
A6.3	INTERIOR ELEVATIONS - GUESTROOMS
A6.4	INTERIOR ELEVATIONS - GUESTROOMS
A6.5	INTERIOR ELEVATIONS - GUESTROOMS
A6.6	INTERIOR ELEVATIONS - GUESTROOMS
A6.7	INTERIOR ELEVATIONS - GUESTROOMS
A6.8	INTERIOR ELEVATIONS - GUESTROOMS
A6.9	INTERIOR ELEVATIONS - CY VESTIBULES & CORRIDORS
A6.10	INTERIOR ELEVATIONS - CY VESTIBULES & CORRIDORS
A6.11	INTERIOR ELEVATIONS - RI VESTIBULES & CORRIDORS
A6.12	INTERIOR ELEVATIONS - RI VESTIBULES & CORRIDORS
A6.13	INTERIOR ELEVATIONS- PUBLIC AREAS
A6.14	INTERIOR ELEVATIONS- PUBLIC AREAS
A6.15	INTERIOR ELEVATIONS- PUBLIC AREAS
A6.16	INTERIOR ELEVATIONS - PUBLIC AREAS
A6.17	INTERIOR ELEVATIONS - PUBLIC AREAS
A6.18	INTERIOR ELEVATIONS - PUBLIC AREAS
A7.1	ELEVATOR ENLARGED FLOOR PLANS
A7.2	ELEVATOR ENLARGED FLOOR PLANS
A7.3	ELEVATOR ENLARGED SECTIONS
A7.4	ELEVATOR ENLARGED SECTIONS
A7.5	STAIR #1 - ENLARGED FLOOR PLANS
A7.6	STAIR #2 - ENLARGED FLOOR PLANS
A7.7	STAIRS #3, 4 & 5 ENLARGED FLOOR PLANS
A7.8	STAIR # 1 SECTIONS
A7.9	STAIR # 1 SECTIONS
A7.10	STAIR #2 SECTIONS
A7.11	STAIRS #3 & 4 SECTIONS / STAIR DETAILS
A7.12	STAIR #5 SECTIONS/ STAIR DETAILS
A8.0	DOOR SCHEDULE & DOOR TYPES
A8.1	DOOR SCHEDULE (CON'T)
A8.4	DOOR DETAILS
A8.5	WINDOW SCHEDULE
A8.6	WINDOW DETAILS
A8.7	ELEVATOR DETAILS
A8.8	MISCELLANEOUS DETAILS
A8.9	MISCELLANEOUS DETAILS
A8.10	MISCELLANEOUS DETAILS
A8.11	CANOPY PLAN & DETAILS
A9.1	WATERPROOFING DETAILS
A9.2	WATERPROOFING DETAILS
A9.3	EXTERIOR DETAILS
A9.4	EXTERIOR DETAILS
A9.5	EXTERIOR DETAILS
A9.6	EXTERIOR DETAILS
A9.7	JOINT COVERS @ PARKADE
A9.8	MISCELLANEOUS DETAILS
A9.9	POOL & DECK DETAILS
A9.11	ROOF DETAILS
A9.12	ROOF DETAILS
△3 A-1.2	SECOND FLOOR NEW PLAN (MODEL ROOMS)
A-5.1	CY-RI MODEL GUESTROOM ENLARGED PLANS
A-6.1	CY-RI MODEL GUESTROOM INTERIOR ELEVATIONS

INTERIOR DESIGN

ID0.1	COVER SHEET
ID0.2	KEY PLANS
ID0.3	SCHEDULES
ID0.4	FINISH SPECIFICATIONS
ID0.5	FINISH SPECIFICATIONS
ID0.6	FINISH SPECIFICATIONS
ID0.7	FINISH SPECIFICATIONS
ID2.0	L0 FLOOR PLAN
ID2.1	L1 FLOOR PLAN
ID2.2	L2 FLOOR PLAN
ID2.3	L3 FLOOR PLAN
ID2.4	L4 FLOOR PLAN
ID2.5	L5-L9 FLOOR PLAN (CY)
ID2.6	L10-L19 FLOOR PLAN (RI)
ID3.0	ENLARGED L0 FLOOR PLAN
ID3.1	ENLARGED L1 FLOOR PLAN
ID3.2	ENLARGED L1 FLOOR PLAN
ID3.3	ENLARGED L2 FLOOR PLAN
ID3.4	ENLARGED L3 FLOOR PLAN
ID3.5	ENLARGED L3 FLOOR PLAN
ID3.6	ENLARGED L4 FLOOR PLAN
ID3.7	ENLARGED L4 FLOOR PLAN
ID3.8	ENLARGED CY CORRIDOR FLOOR PLAN
ID3.9	ENLARGED RI CORRIDOR FLOOR PLAN
ID5.1	INTERIOR SECTIONS
ID7.1	INTERIOR ELEVATIONS
ID7.2	INTERIOR ELEVATIONS
ID7.3	INTERIOR ELEVATIONS
ID7.4	INTERIOR ELEVATIONS
ID7.5	INTERIOR ELEVATIONS
ID7.6	INTERIOR ELEVATIONS
ID7.7	INTERIOR ELEVATIONS
ID7.8	INTERIOR ELEVATIONS
ID7.9	INTERIOR ELEVATIONS
ID7.10	INTERIOR ELEVATIONS
ID7.11	INTERIOR ELEVATIONS
ID7.12	INTERIOR ELEVATIONS
ID7.13	INTERIOR ELEVATIONS
ID8.1	GUESTROOM PLANS & ELEVS CY-K
ID8.2	GUESTROOM PLANS & ELEVS CY-KA
ID8.3	GUESTROOM PLANS & ELEVS CY-KB
ID8.4	GUESTROOM PLANS & ELEVS CY-KS
ID8.5	GUESTROOM PLANS & ELEVS CY-KS-ADA
ID8.6	GUESTROOM PLANS & ELEVS CY-KN-ADA
ID8.7	GUESTROOM PLANS & ELEVS CY-QQ
ID8.8	GUESTROOM PLANS & ELEVS CY-QQB
ID8.9	GUESTROOM PLANS & ELEVS CY-QQN
ID8.10	GUESTROOM PLANS CY-QQN-ADA
ID8.11	GUESTROOM PLANS & ELEVS CY-QQS-ADA
ID8.13	GUESTROOM PLANS & ELEVS RI-SKA
ID8.14	GUESTROOM PLANS & ELEVS RI-SKS-ADA
ID8.15	GUESTROOM PLANS & ELEVS RI-SKS
ID8.16	GUESTROOM PLANS & ELEVS RI-SQQ
ID8.17	GUESTROOM PLANS & ELEVS RI-SQQA
ID8.18	GUESTROOM PLANS & ELEVS RI-SQQE
ID8.19	GUESTROOM PLANS & ELEVS SKS-W
ID8.20	GUESTROOM PLANS & ELEVS SQQW
ID8.21	GUESTROOM PLANS & ELEVS SQQW-ADA
ID9.1	PUBLIC SPACE DETAILS
ID9.2	PUBLIC SPACE DETAILS
ID9.3	PUBLIC SPACE DETAILS
ID9.4	PUBLIC SPACE DETAILS
ID9.5	PUBLIC SPACE DETAILS
ID9.6	PUBLIC SPACE DETAILS
ID9.7	PUBLIC SPACE DETAILS
ID9.8	PUBLIC SPACE DETAILS
ID9.9	PUBLIC SPACE DETAILS
ID9.10	PUBLIC SPACE DETAILS
ID9.11	PUBLIC SPACE DETAILS
ID9.12	PUBLIC SPACE DETAILS
ID9.13	GUESTROOM KITCHEN TYPES & DETAILS
ID9.14	GUESTROOM DETAILS

FOOD SERVICE

FS&L-1	FOOD SERVICE & LAUNDRY EQUIPMENT PLAN
FS&L-2	FOOD SERVICE & LAUNDRY EQUIPMENT SCHEDULE
FS&L-3	FOOD SERVICE & LAUNDRY EQUIPMENT ELEVATIONS
FS&L-4	FOOD SERVICE & LAUNDRY PLUMBING PLAN
FS&L-5	FOODSERVICE & LAUNDRY ELECTRICAL PLAN
FS&L-6	FOODSERVICE & LAUNDRY EQUIP. PLUMB. & ELEC. NOTES & DETAILS
FS&L-7	FOODSERVICE & LAUNDRY VENTILATION PLAN
FS&L-8	FOODSERVICE & LAUNDRY BLDG. CONDITIONS PLAN
FS&L-9	FOODSERVICE REFRIGERATION PLAN
FS&L-10	FOODSERVICE COLD STORAGE ROOMS 1 OF 3
FS&L-11	FOODSERVICE COLD STORAGE ROOMS 2 OF 3
FS&L-12	FOODSERVICE COLD STORAGE ROOMS 3 OF 3

WINDOW WASHING

FA0.0	COVER SHEET
FA1.5	5th FLOOR ROOF PLAN
FA1.20	ROOF PLAN
FA1.21	COMPOSITE ROOF PLAN
FA3.1	EXTERIOR ELEVATIONS
FA3.2	EXTERIOR ELEVATIONS
FA4.1	SECTIONS
FA9.0	DETAILS
FA9.1	DETAILS

VOLUME : TWO

CS-2	COVER SHEET - VOLUME 2

STRUCTURAL

S0.1	GENERAL STRUCTURAL NOTES (CONTINUES)
S0.2	GENERAL STRUCTURAL NOTES (CONTINUED)
S0.3	TYPICAL DETAILS
S0.4	DESIGN LOAD KEYPLAN
S1.0	BASEMENT PLAN
S1.1	FIRST FLOOR FRAMING PLAN
S1.1A	FIRST FLOOR POST-TENSION PLAN
S1.2	SECOND FLOOR FRAMING PLAN
S1.2A	SECOND FLOOR POST-TENSION PLAN
S1.3	THIRD FLOOR FRAMING PLAN
S1.3A	THIRD FLOOR POST-TENSION PLAN
S1.4	FOURTH FLOOR FRAMING PLAN
S1.4A	FOURTH FLOOR POST-TENSION PLAN
S1.5	FIFTH FLOOR FRAMING PLAN
S1.5A	FIFTH FLOOR POST-TENSION PLAN
S1.6	SIXTH - NINTH FLOOR FRAMING PLAN
S1.6A	SIXTH – NINTH FLOOR POST-TENSION PLAN
S1.7	TENTH FLOOR FRAMING PLAN
S1.7A	TENTH FLOOR POST-TENSION PLAN
S1.8	ELEVENTH – NINETEENTH FLOOR FRAMING PLAN
S1.8A	ELEVENTH – NINETEENTH FLOOR POST-TENSION PLAN
S1.9	LOW ROOF FRAMING PLAN
S1.9A	ROOF POST-TENSION PLAN
S1.10	MECHANICAL PLATFORM FRAMING PLAN
S1.11	PENTHOUSE / HIGH ROOF FRAMING PLANS
S1.12	SHEAR WALL ELEVATIONS
S1.13	SHEAR WALL ELEVATIONS
S2.1	FOUNDATION DETAILS
S2.2	FOUNDATION DETAILS
S3.1	FRAMING DETAILS
S3.2	FRAMING DETAILS
S4.1	FRAMING DETAILS
S4.2	FRAMING DETAILS
S4.3	FRAMING DETAILS
S5.1.0	STAIR #1 PLANS
S5.1.1	STAIR #1 SECTIONS
S5.1.2	STAIR #1 SECTIONS
S5.2.0	STAIR #2 PLANS
S5.2.1	STAIR #2 SECTIONS
S5.3.0	STAIR #3, #4 & #5 PLANS
S5.3.1	STAIR #3 & 4 SECTIONS
S5.4	STAIR DETAILS
S5.5	STAIR DETAILS

MECHANICAL

M0.1	MECHANICAL SYMBOLS, LEGEND, ABBREVIATIONS, AND NOTES
M2.0	BASEMENT FLOOR MECHANICAL PLAN
M2.1	GROUND FLOOR MECHANICAL PLAN
M2.2	SECOND FLOOR MECHANICAL PLAN
M2.3	THIRD FLOOR MECHANICAL PLAN
M2.4	FOURTH FLOOR MECHANICAL PLAN
M2.5	FIFTH AND SEVENTH FLOORS COURTYARD TOWER MECHANICAL PLANS
M2.6	SIXTH AND EIGHTH FLOORS CY TOWER DUCTWORK PLAN
M2.7	NINTH FLOOR CY TOWER MECHANICAL PLAN
M2.8	TENTH THRU NINETEENTH FLOORS RI MECHANICAL PLAN
M2.9	PENTHOUSE/ROOF MECHANICAL PLAN
M2.10	ROOF MECHANICAL PLAN
M3.0	BASEMENT FLOOR MECHANICAL PIPING PLAN
M3.1	GROUND FLOOR MECHANICAL PIPING PLAN
M3.2	SECOND FLOOR MECHANICAL PIPING PLAN
M3.3	THIRD FLOOR MECHANICAL PIPING PLAN
M3.4	FOURTH FLOOR MECHANICAL PIPING PLAN
M3.5	FIFTH THRU NINTH FLOOR CY TOWER MECHANICAL PIPING PLAN
M3.6	TENTH THRU NINETEENTH FLOORS RI TOWER MECHANICAL PIPING PLAN
M3.7	PENTHOUSE / ROOF MECHANICAL PIPING PLAN
M4.1	MECHANICAL SECTIONS
M5.1	EXHAUST DUCT RISER DIAGRAMS
M5.2	DUCT RISER DIAGRAMS
M5.3	SHAFT DETAILS
M5.4	FIRE SMOKE DAMPER LOCATION MATRIX
M5.5	FIRE SMOKE DAMPER LOCATION MATRIX
M5.6	SMOKE CONTROL SPECIFICATIONS
M5.7	SMOKE CONTROL SPECIFICATIONS CONTINUED
M5.8	SMOKE CONTROL SPECIFICATIONS CONTINUED
M6.1	CHILLED SYSTEM PIPING SCHEMATIC
M6.2	BOILER SYSTEM PIPING SCHEMATIC
M6.3	MECHANICAL PIPING DIAGRAM
M6.4	MECHANICAL EXPANSION / CONTRACTION PIPING DIAGRAM
M7.1	MECHANICAL CONTROLS DIAGRAMS
M7.2	MECHANICAL CONTROLS SEQUENCE OF OPERATIONS
M7.3	MECHANICAL CONTROLS POINTS LIST
M7.4	MECHANICAL CONTROLS POINTS LIST
M8.1	MECHANICAL DETAILS
M8.2	MECHANICAL DETAILS
M8.3	MECHANICAL DETAILS
M8.4	MECHANICAL DETAILS
M8.5	MECHANICAL DETAILS
M8.6	MECHANICAL DETAILS
M8.7	MECHANICAL AHU DETAIL PLAN AHU-B-1 AND AHU-B-2
M8.8	MECHANICAL AHU DETAIL PLAN AHU-B-3 AND AHU-2-1
M8.9	MECHANICAL AHU DETAIL PLAN AHU-2-2
M8.10	MECHANICAL AHU DETAIL PLAN AHU-2-3
M8.11	MECHANICAL AHU DETAIL PLAN AHU-2-4
M8.12	MECHANICAL AHU DETAIL PLAN AHU-20-1 AND AHU-20-2
M9.1	MECHANICAL SCHEDULES
M9.2	MECHANICAL SCHEDULES
M9.3	MECHANICAL SCHEDULES

PLUMBING

P0.1	PLUMBING LEGEND,SCHEDULES AND CALCULATIONS
P2.0	BASEMENT PLUMBING PLAN - WATER AND GAS PIPING
P2.1	GROUND FLOOR PLUMBING PLAN - WATER AND GAS PIPING
P2.2	SECOND FLOOR PLUMBING PLAN - WATER AND GAS PIPING
P2.3	THIRD FLOOR PLUMBING PLAN - WATER AND GAS PIPING
P2.4	FOURTH FLOOR PLUMBING PLAN - WATER AND GAS PIPING
P2.5	FIFTH THRU NINTH FLOOR COURTYARD TOWER PLUMBING PLAN - WATER AND GAS PIPING
P2.6	TENTH THRU NINEEENTH FLOORS - TOWER PLUMBING PLAN - WATER AND GAS PIPING
P2.7	PENTHOUSE / ROOF PLUMBING PLAN - WATER AND GAS PIPING
P3.0	BASEMENT PLUMBING FLOOR PLAN - WASTE, DRAIN AND VENT PIPING
P3.1	GROUND FLOOR PLUMBING PLAN - WASTE, DRAIN AND VENT PIPING
P3.2	SECOND FLOOR PLUMBING PLAN - WASTE, DRAIN AND VENT PIPING
P3.3	THIRD FLOOR PLUMBING PLAN - WASTE, DRAIN AND VENT PIPING
P3.4	FOURTH FLOOR PLUMBING PLAN - WASTE, DRAIN AND VENT PIPING
P3.5	FIFTH THRU EIGHTH FLOOR COURTYARD TOWER PLUMBING PLAN - WASTE, DRAIN AND VENT PIPING
P3.6	NINTH FLOOR COURTYARD TOWER PLUMBING PLAN - WASTE, DRAIN AND VENT PIPING
P3.7	TENTH THRU EIGHTEENTH FLOORS RESIDENCE-INN PLUMBING PLAN - WASTE, DRAIN AND VENT PIPING
P3.8	NINETEENTH FLOOR RESIDENCE-INN TOWER PLUMBING PLAN - WASTE, DRAIN AND VENT PIPING
P3.9	PENTHOUSE PLUMBING PLAN - WASTE, DRAIN AND VENT PIPING
P3.10	ROOF PLUMBING PLAN - WASTE, DRAIN AND VENT PIPING
P5.1	WASTE AND VENT RISER DIAGRAMS
P5.2	WASTE AND VENT RISER DIAGRAMS
P5.3	WASTE AND VENT RISER DIAGRAMS
P5.4	WASTE AND VENT RISER DIAGRAMS
P5.5	WASTE AND VENT RISER DIAGRAMS
P5.6	WASTE AND VENT RISER DIAGRAMS
P6.1	WATER RISER DIAGRAMS
P6.2	GAS RISER DIAGRAMS
P6.3	SHAFT DETAILS
P6.4	PLUMBING EXPANSION / CONTRACTION PIPING DIAGRAMS
P7.1	PLUMBING DETAILS
P8.1	PLUMBING FIXURE SCHEDULE
P8.2	PLUMBING SCHEDULES

ELECTRICAL

E0.1	ELECTRICAL SYMBOLS AND NOTES
E0.2	LIGHTING FIXTURE SCHULE AND NOTES
E0.3	LIGHTING FIXTURE SCHEDULE AND NOTES
E1.0	ELECTRICAL OVERALL SITE PLAN
E1.1	PARTIAL ELECTRICAL SITE PLAN - STREET SCAPE
E1.2	CENTRAL BUILDING ELECTRICAL DEMOLITION PLAN
E2.0	BASEMENT FLOOR LIGHTING PLAN
E2.1	GROUND FLOOR LIGHTING PLAN
E2.2	SECOND FLOOR LIGHTING PLAN
E2.3	THIRD FLOOR LIGHTING PLAN
E2.4	FOURTH FLOOR LIGHTING PLAN
E2.5	FIFTH, SEVENTH, AND NINTH FLOORS CY LIGHTING PLAN
E2.6	SIXTH AND EIGHTH FLOORS CY LIGHTING PLAN
E2.7	TENTH THRU NINETEENTH FLOORS RI LIGHTING PLAN
E2.8	PENTHOUSE / ROOF LIGHTING PLAN
E3.0	BASEMENT FLOOR POWER PLAN
E3.1	GROUND FLOOR POWER PLAN
E3.2	SECOND FLOOR POWER PLAN
E3.3	THIRD FLOOR POWER PLAN
E3.4	FOURTH FLOOR POWER PLAN
E3.5	FIFTH, SEVENTH, AND NINTH FLOORS CY POWER PLAN
E3.6	SIXTH AND EIGHTH FLOORS CY POWER PLAN
E3.7	TENTH THRU NINETEENTH FLOORS RI POWER PLAN
E3.8	PENTHOUSE / ROOF POWER PLAN
E4.1	ENLARGED COURTYARD TYP. QUEEN GUESTROOMS ELECTRICAL PLANS
E4.2	ENLARGED COURTYARD TYP. KING GUESTROOMS ELECTRICAL PLANS
E4.3	ENLARGED RESIDENT-INN TYP. QUEEN GUESTROOMS ELECTRICAL PLANS
E4.4	ENLARGED RESIDENT-INN TYP. KING GUESTROOMS ELECTRICAL PLANS
E4.5	APS BASEMENT VAULT SUPPORT REQUIREMENTS
E4.6	APS BASEMENT VAULT POWER AND GROUNDING
E4.7	ELECTRICAL EQUIPMENT SCHEDULE
E5.1	ELECTRICAL DETAILS AND DIAGRAMS
E5.2	ELECTRICAL DETAILS
E5.3	LIGHTING CONTROL RISER DIAGRAMS
E6.1	ELECTRICAL ONE LINE DIAGRAM SES-1
E6.2	ELECTRICAL ONE LINE DIAGRAM SES-2
E6.3	ELECTRICAL ONE LINE DIAGRAM SES-3
E6.4	ELECTRICAL ONE LINE DIAGRAM - GENERATOR
E7.1	ELECTRICAL COURTYARD PANEL SCHEDULES
E7.2	ELECTRICAL RESIDENCE-INN PANEL SCHEDULES
E7.3	ELECTRICAL PANEL SCHEDULES
E7.4	ELECTRICAL PANEL SCHEDULES AND LOAD CALCULATIONS
E7.5	ELECTRICAL PANEL SCHEDULES AND LOAD CALCULATIONS
E7.6	ELECTRICAL PANEL SCHEDULES AND LOAD CALCULATIONS
E7.7	ELECTRICAL LOAD CALCULATIONS
E8.0	NORTH BLOCK REFEED LUHRS BUILDING - BASEMENT NEW WORK
E8.0D	NORTH BLOCK REFEED LUHRS BUILDING - BASEMENT DEMO
E8.1	NORTH BLOCK REFEED PARTIAL EXISTING ONE LINE DIAGRAM
E8.2	NORTH BLOCK REFEED EXISTING ONE LINE DIAGRAMS
E8.3	NORTH BLOCK REFEED EXISTING ELECTRICAL DISTRIBUTION IMAGES
E8.4	NORTH BLOCK REFEED NEW EQUIPMENT ONE LINE DIAGRAM
E8.5	NORTH BLOCK REFEED LOAD CALCULATIONS AND SHORT CIRCUIT CALCULATIONS

TELECOM

T-0.1	TITLE PAGE
T-0.2	DRAWING LIST, SYMBOLS & NOTES
T-1.0	BASEMENT FLOOR PLAN
T-1.1	GROUND FLOOR PLAN
T-1.2	SECOND FLOOR PLAN
T-1.3	THIRD FLOOR PLAN
T-1.4	FORTH FLOOR PLAN
T-1.5	COURTYARD FLOORS 5-8
T-1.6	RESIDENCE INN FLOORS 9-12
T-1.7	RESIDENCE INN FLOORS 13-16
T-1.8	RESIDENCE INN FLOORS 17-20
T-2.0	COURTYARD UNIT DETAILS
T-2.1	RESIDENCE INN UNIT DETAILS
T-3.0	BACK OF HOUSE OUTLET DETAILS
T-3.1	GUESTROOM OUTLET DETAILS
T-4.0	MDF ROOM DETAILS
T-4.1	IDF ROOM DETAILS
T-4.2	IDF ROOM DETAILS
T-4.3	IDF ROOM DETAILS
T-5.0	CONDUIT & COPPER RISER DIAGRAMS
T-5.1	FIBER & CATV RISER DIAGRAMS
T-6.0	DETAILS
AV-0.1	TITLE PAGE
AV-0.2	DRAWINGS, SYMBOLS & NOTES
AV-1.0	GROUND FLOOR PLAN AND RCP
AV-1.1	SECOND FLOOR PLAN AND RCP
AV-1.2	THIRD FLOOR PLAN AND RCP
AV-1.3	FOURTH FLOOR PLAN AND RCP
AV-2.0	AV DETAILS
AV-3.0	SPEAKER SINGLE LINE
AV-4.0	VIDEO ROOM DETAILS
SEC-0.1	TITLE PAGE
SEC-0.2	DRAWING LIST, SYMBOLS & NOTES
SEC-1.0	GROUND FLOOR PLAN
SEC-1.1	THIRD FLOOR PLAN
SEC-1.2	FOURTH FLOOR PLAN
SEC-2.0	SECURITY DETAILS
SEC-3.0	SECURITY SINGLE LINE

POOL

SP001	POOL PLAN COVER SHEET
SP101	THIRD FLOOR POOL PLAN
SP201	THIRD FLOOR POOL DETAILS
SP202	THIRD FLOOR POOL DETAILS
SP203	THIRD FLOOR POOL EQUIPMENT DETAILS

INFORMATION INDEX

SITE PLAN	A0.1
FLOOR PLAN(S)	A1.0 THRU A1.19
ROOF PLAN(S)	A1.20, A1.21
ARCHITECTURAL ELEVATIONS	A3.1 THRU A3.4
BUILDING SECTIONS	A4.1 THRU A4.4
DOOR, WINDOW, FINISH SCHEDULE	A8.0 THRU A8.5
ARCHITECTURAL DETAILS	A8.6 THRU A9.12
STRUCTURAL NOTES	S1.01, S1.02
FOUNDATION PLAN	S1.0
FLOOR AND ROOF FRAMING PLAN	S1.1 THRU S1.11
STRUCTURAL DETAILS	S2.1 THRU S5.5
MECHANICAL PLAN(S)	M0.1 THRU M9.3
PLUMBING PLAN(S)	P0.1 THRU P9.3
ELECTRICAL PLAN(S)	E0.1 THRU E8.5
ENERGY CALCULATIONS	SEE SUBMITTAL ATTACHMENTS
TOPOGRAPHIC SURVEY	A0.0
GRADING & DRAINAGE	C1.0 THRU C2.1
LANDSCAPE PLAN(S)	TS-0 THRU LC-02
ACCESSIBLE NOTES	T1.2
MEANS OF EGRESS PLAN(S)	T3.1, T3.2
LOCATION, SIZE & TYPE OF ALL EXISTING AND PROPOSED; WATER METERS, WATER SERVICES & MAINS CROSS CONNECTION CONTROL DEVICES SEWER LATERALS AND MAINS	C2.0 THRU C3.1

AWBREY
COOK
MCGILL
architects
1045 14th Street, Suite 100
San Diego, CA 92101-5701
Phone: 619 . 398 . 3480

ARCHITECTS:	
THOMAS B. AWBREY	C 17578
CLIFFORD W. COOK	C 19705
SCOT W. McGILL	C 21059

38897
CLIFFORD W. COOK
05/18/15

Copyright © 2014
AWBREY COOK MCGILL ARCHITECTS
All ideas, designs, and arrangements indicated on these drawings are the property of AWBREY COOK MCGILL ARCHITECTS and are intended to be used in connection with this specific project only and shall not otherwise be used for any purpose whatsoever without the written consent of the architects. There shall be no changes or deviations from these drawings or the accompanying specifications without the written consent of the architects.

CONSULTANTS:

REVISIONS:

	CONSTRUCTION BID SET	03/09/15
△A	ADDENDUM A	02/02/15
△1	INSTRUCTION BULLETIN 1	02/23/15
△2	INSTRUCTION BULLETIN 2	05/11/15
△3	INSTRUCTION BULLETIN 3	06/16/15

PROJECT:

MARRIOTT RESIDENCE INN
- COURTYARD @ LUHRS
A Development of - LUHRS CM, LLC
Phoenix, Arizona

DRAWN:	LAB
CHECKED:	SWM
DATE:	08/22/14
PROJECT NO.:	12-1601

SHEET TITLE:
SHEET INDEX

SHEET NO.:
T0.1

AWBREY . COOK . McGILL . ARCHITECTS 1045 14th Street Suite 100, San Diego, California 92101.5701 Telephone 619.398.3480 Fax. 619.398.3488

FINAL FOR CONSTRUCTION - 05/18/15

GENERAL STRUCTURAL NOTES

Applies unless noted otherwise on drawings

BUILDING CODE:

2006 EDITION OF THE INTERNATIONAL BUILDING CODE, WITH CITY OF PHOENIX AMENDMENTS.

LOADS:

ROOFS:

ROOF LIVE LOAD = 20 PSF (REDUCIBLE).
SUPERIMPOSED DEAD LOAD ON ROOF = 10 PSF. (EXCLUDES DECK WEIGHT)
SUPERIMPOSED DEAD LOAD ON MECHANICAL ROOM AT ROOF = 200 PSF. (EXCLUDES DECK WEIGHT)
MECHANICAL UNIT WEIGHTS SHOWN ON FRAMING PLANS HAVE BEEN INCREASED BY A FACTOR OF 1.2.

FLOORS:

PUBLIC ACCESS FLOOR LIVE LOAD = 100 PSF (REDUCIBLE).
OFFICE FLOOR LIVE LOAD = 50 PSF (REDUCIBLE).
HOTEL FLOOR LIVE LOAD = 40 PSF (REDUCIBLE).
FLOOR STORAGE LIVE LOAD = 125 PSF (NON-REDUCIBLE) (25% FOR SEISMIC).
SUPERIMPOSED DEAD LOAD ON FLOOR SLAB = 10 PSF. (EXCLUDES DECK WEIGHT)
SUPERIMPOSED DEAD LOAD ON MECHANICAL ROOM FLOOR = 125 PSF. (EXCLUDES DECK WEIGHT)
OFFICE PARTITION LOAD = 15 PSF (10 PSF FOR SEISMIC).
HOTEL PARTITION LOAD = 5 PSF (5 PSF FOR SEISMIC).
STAIR LIVE LOAD = 100 PSF.

FLOOR LOADS INCLUDE 1.5 PSF ALLOWANCE FOR FIRE SPRINKLER PIPE BRANCH LINES. DESIGNERS OF STRUCTURAL MEMBERS ENGINEERED BY OTHERS SHALL COORDINATE WITH CONTRACTOR THE WEIGHTS AND LOCATIONS OF ALL FIRE SPRINKLER BRANCH LINES GREATER THAN 3" DIA. THESE BRANCH LINES SHALL BE SHOWN ON SHOP DRAWINGS SUBMITTED FOR REVIEW.

△1

LATERAL:

WIND:

BASIC WIND SPEED (3-SECOND GUST) = 90 MPH.
WIND IMPORTANCE FACTOR, I = 1.0.
OCCUPANCY CATEGORY, II.
EXPOSURE C.

WIND:

BASIC WIND SPEED (3-SECOND GUST) = 90 MPH.
WIND IMPORTANCE FACTOR, I = 1.0.
EXPOSURE C.
COMPONENTS AND CLADDING WIND LOADS:
ROOF ZONE 1 = -36.3 PSF.
ROOF ZONE 2 = -58.0 PSF.
ROOF ZONE 3 = -79.7 PSF.
SEE COMPONENTS AND CLADDING WIND LOAD ROOF PLAN(S).
LOW ROOF - HOTEL
WALL ZONE 4 = 26.6 PSF.
PARAPET WALL ZONE 4 = 73.3 PSF.
WALL ZONE 5 = 44.9 PSF.
PARAPET WALL ZONE 5 = 94.7 PSF.
HIGH ROOF ? ELEVATOR MACHINE ROOM
WALL ZONE 4 = 27.2 PSF.
PARAPET WALL ZONE 4 = 74.8 PSF.
WALL ZONE 5 = 45.8 PSF.
PARAPET WALL ZONE 5 = 96.6 PSF.

SEISMIC:

SEISMIC IMPORTANCE FACTOR, I = 1.0.
OCCUPANCY CATEGORY, II.
MAPPED SHORT PERIOD SPECTRAL ACCELERATION, Ss = 0.177.
MAPPED ONE SECOND SPECTRAL ACCELERATION, S1 = 0.061.
SOIL SITE CLASS, C.
DESIGN SHORT PERIOD SPECTRAL ACCELERATION, Sds = 0.142.
DESIGN ONE SECOND SPECTRAL ACCELERATION, Sd1 = 0.069
SEISMIC DESIGN CATEGORY, B.
BASIC SEISMIC-FORCE-RESISTING SYSTEM = ORDINARY REINFORCED CONCRETE SHEAR WALLS
DESIGN BASE SHEAR =392 k.
SEISMIC RESPONSE COEFFICIENT, Cs = 0.010.
RESPONSE MODIFICATION FACTOR (R) = 4.
ANALYSIS PROCEDURE USED = EQUIVALENT LATERAL FORCE PROCEDURE

FOR DEFLECTION/CAMBER CRITERIA OF STRUCTURAL MEMBERS ENGINEERED BY OTHERS, SEE SPECIFIC MEMBER'S SECTION BELOW.

FOUNDATIONS:

SOIL REPORT BY SPEEDIE AND ASSOCIATES; JOB NO. 130174SA. MAT FOUNDATION SHALL BEAR ON DENSE NATIVE SAND AND GRAVEL 23'-0" MINIMUM BELOW LOWEST ADJACENT STREET GRADE (MADISON STREET) AS STATED IN SOILS REPORT. DESIGN SOIL BEARING VALUE = 5,000 PSF AVERAGE, 7,000 PSF MAXIMUM AND 13,000 PSF PEAK PRESSURE WITH A MODULUS OF SUBGRADE REACTION, k, OF 150 PCI.

REFER TO SOILS REPORT FOR ADDITIONAL INFORMATION PRIOR TO COMMENCEMENT OF EARTHWORK. SOILS ENGINEER SHALL INSPECT FOUNDATION EXCAVATIONS PRIOR TO PLACEMENT OF CONCRETE.

CONCRETE:

SPECIFIED 28 DAY COMPRESSIVE STRENGTH F'c:

EXTERIOR SLAB ON GRADE	3,000 PSI
TOPPING FOR STEEL DECKING	3,000 PSI
COLUMNS AND WALLS	SEE SCHEDULE
BEAMS	6,000 PSI AT (56 DAY)
ELEVATED POST-TENSIONED SLABS	6,000 PSI AT (56 DAY)
MAT FOUNDATIONS	6,000 PSI AT (56 DAY)

MAT FOUNDATIONS SHALL UTILIZE TYPE II OR TYPE V CEMENT TO CONTROL HEAT OF HYDRATION.

GENERAL:

ALL CAST-IN-PLACE CONCRETE CONSTRUCTION SHALL CONFORM TO THE LATEST EDITION OF THE ACI. MECHANICALLY VIBRATE ALL CONCRETE WHEN PLACED UNLESS NOTED OTHERWISE. ADMIXTURES CONTAINING CHLORIDES SHALL NOT BE USED. NO OTHER ADMIXTURES PERMITTED WITHOUT APPROVAL. FOR CONCRETE WITHOUT PLASTICIZER, MAXIMUM SLUMP 4 1/2" AT POINT OF PLACEMENT U.N.O. IF PLASTICIZER IS USED, A HIGHER FINAL SLUMP MAY BE ALLOWED UPON STRUCTURAL ENGINEER'S APPROVAL.

SLEEVES SHALL BE PROVIDED FOR ALL LIGHTNING PROTECTION GROUNDING CABLES EMBEDDED IN STRUCTURAL CONCRETE.

FOR REINFORCING INFORMATION, SEE REINFORCING SECTION OF G.S.N., PLANS, SCHEDULES AND DETAILS.

UNLESS NOTED OTHERWISE ON THE DRAWINGS, THE EMBEDMENT OF CONDUITS, PIPES, SLEEVES, ETC. OF ANY MATERIAL SHALL NOT BE PERMITTED WITHIN ANY CONCRETE STRUCTURAL ELEMENT (IE: COLUMNS, BEAMS, ELEVATED SLABS, ETC.) OR STRUCTURAL CONCRETE TOPPINGS WITHOUT THE EXPRESSED APPROVAL OF THE STRUCTURAL ENGINEER.

FLY ASH - IF PERMITTED BY ARCHITECTURAL SPECIFICATIONS, SHALL BE LIMITED TO 25% OF TOTAL CEMENTITIOUS MATERIALS BY WEIGHT. FLY ASH SHALL BE INCLUDED IN THE CALCULATION OF W/C RATIOS SPECIFIED ABOVE. FLY ASH ADDITIVES SHALL NOT BE USED ON SLABS WITH A BURNISHED OR ACID FINISH.

TEST DATA FOR EACH CONCRETE MIX SHALL BE SUBMITTED FOR REVIEW PER CHAPTER 5 OF ACI 318. REFERENCE FIGURE R5.3 FOR SUBMITTAL REQUIREMENTS AND OPTIONS. CONCRETE MIX DESIGNS THAT ARE SUBMITTED WITHOUT THE APPROPRIATE TEST DATA CANNOT BE REVIEWED.

MAT FOUNDATIONS:

MAT FOUNDATION CONSTRUCTION SHALL CONFORM TO THE LATEST EDITION OF ACI 207.1 FOR MASS CONCRETE. ALL CAST-IN-PLACE MAT FOUNDATION CONCRETE SHALL BE PLACED MONOLITHICALLY. CONCRETE SHALL BE PLACED IN HORIZONTAL LAYERS NOT EXCEEDING 2'-0" IN DEPTH. EACH CONCRETE LAYER SHALL BE PLACED WHILE THE UNDERLYING LAYER IS STILL RESPONSIVE TO VIBRATION, AND LAYERS SHALL BE SUFFICIENTLY SHALLOW TO ALLOW THE LAYERS TO BE CONSOLIDATED BY PROPER VIBRATION. HORIZONTAL OR INCLINED COLD JOINTS SHALL NOT BE PERMITTED WITHIN MAT FOUNDATION CONSTRUCTION.

SLABS ON GRADE:

MAXIMUM SLUMP WITHOUT PLASTICIZER AT POINT OF PLACEMENT SHALL BE 5 INCHES. MIX DESIGNS SHALL TAKE CARE TO PROVIDE THE LARGEST POSSIBLE SIZE OF COURSE AGGREGATE WHILE MAINTAINING CONCRETE WORKABILITY. NOMINAL MAXIMUM AGGREGATE SIZE SHALL NOT BE LESS THAN 3/4 INCH NOR MORE THAN 1/3 THE DEPTH OF THE SLAB. MIX DESIGNERS SHALL SUBMIT SLAB ON GRADE DESIGNS WITH SHRINKAGE CHARACTERISTICS NOT EXCEEDING 0.00078 IN/IN TO MEET THE REQUIREMENTS OF ACI 360R-06, FIG5.6 FOR TYPICAL CONCRETE. SLABS SHALL BE PLACED ON A FLAT, SMOOTH, FIRM, COMPACTED SUBGRADE.

CONCRETE SHALL BE MIXED, PLACED, FINISHED AND CURED PER LATEST EDITION OF ACI 302.1 FOR THE APPROPRIATE FLOOR CLASS TYPE PER TABLE 1.1 AND SECTION 7. CURING COMPOUND SHALL BE COMPATIBLE WITH ARCHITECTURAL FLOOR FINISH.

SLABS ON GRADE SHALL BE VIBRATED ONLY AT TRENCHES, FLOOR DUCTS, TURNDOWNS, ETC. CAST CLOSURE POUR AROUND COLUMNS AFTER COLUMN DEAD LOAD IS APPLIED. UNLESS APPROVED OTHERWISE IN WRITING BY THE ARCHITECT, ALL CONCRETE SLABS ON GRADE SHALL BE BOUND BY CONTROL JOINTS (CONSTRUCTION OR SAW CUT) PER TYPICAL DETAILS, AS SHOWN ON THE FOUNDATION PLAN, SUCH THAT THE ENCLOSED AREA DOES NOT EXCEED 150 SQUARE FEET. CONSTRUCTION CONTROL JOINTS NEED ONLY OCCUR AT EXPOSED EDGES DURING POURING, ALL OTHER JOINTS MAY BE SAW CUT. SLAB REINFORCING, WHERE SHOWN, SHALL NOT EXTEND MORE THAN 125 FEET WITHOUT STOPPING THE REINFORCEMENT AT A CONTROL JOINT.

SLAB DOWELS WHERE SPECIFIED, SHALL CONSIST OF TAPERED PLATE DOWELS AT SAWCUT JOINTS AND PLATE DIAMOND DOWELS AT FORMED CONSTRUCTION JOINT. TAPERED PLATE DOWELS SHALL BE INSTALLED WITH PREMANUFACTURED DOWEL BASKETS AND DIAMOND PLATE DOWELS SHALL BE ATTACHED TO THE FORM WITH A PREFABRICATED SLEEVE. DOWELS, BASKETS, AND SLEEVES SHALL BE MANUFACTURED BY PNA CONSTRUCTION TECHNOLOGIES (PNA-INC.COM) OR APPROVED EQUAL.

SHOTCRETE:

ALL SHOTCRETE CONSTRUCTION SHALL CONFORM TO ACI 506.6. PRECONSTRUCTION TEST PANELS PER IBC SECTION 1914.5 SHALL BE PERFORMED TO REVIEW TYPICAL AND WORST CASE WALL REINFORCING. TEST PANEL NOZZLEMEN SHALL BE SAME NOZZLEMEN WHO PLACE FINAL SHOTCRETE.

STRENGTH TESTS FOR SHOTCRETE SHALL BE MADE BY AN APPROVED TESTING AGENCY ON SPECIMENS WHICH ARE REPRESENTATIVE OF WORK AND WHICH HAVE BEEN WATER SOAKED FOR AT LEAST 24 HOURS PRIOR TO TESTING. SPECIMENS SHALL BE TAKEN AND TESTED PER IBC SECTION 1914.10.

DURING THE CURING PERIODS SPECIFIED HEREIN, SHOTCRETE SHALL BE MAINTAINED ABOVE 40 DEGREES FAHRENHEIT AND IN MOIST CONDITION. DURING INITIAL CURING, SHOTCRETE SHALL BE KEPT CONTINUOUSLY MOIST FOR 24 HOURS AFTER PLACEMENT IS COMPLETE. FINAL CURING SHALL CONTINUE FOR 7 DAYS AFTER SHOTCRETING, FOR 3 DAYS IF HIGH-EARLY STRENGTH CEMENT IS USED, OR UNTIL THE SPECIFIED STRENGTH IS OBTAINED. FINAL CURING SHALL CONSIST OF A FOG SPRAY OR A MOISTURE-RETAINING COVER OR MEMBRANE APPROVED BY THE ARCHITECT/ENGINEER.

COMPLETED SHOTCRETE WORK SHALL BE CHECKED VISUALLY FOR REINFORCING BAR EMBEDMENT, VOIDS, ROCK POCKETS, SAND STREAKS AND SIMILAR DEFICIENCIES BY EXAMINING THREE 3-INCH DIAMETER CORE SAMPLES TAKEN PER DAY OF SHOTCRETE. THE STRUCTURAL ENGINEER SHALL CHOOSE SAMPLE AREAS.

POST-TENSIONING FOR ELEVATED STRUCTURE:

STRESSING OF TENDONS SHALL NOT BE PROCEEDED WITH UNTIL CONCRETE STRENGTH HAS REACHED 3,000 PSI MINIMUM. TENDONS SHALL BE STRESSED WITHIN 72 HOURS AFTER CONCRETE PLACEMENT.

POST-TENSIONING REINFORCING SHALL CONFORM TO THE FOLLOWING:

POST-TENSIONING TENDON MATERIAL	STRESS RELIEVED	LOW RELAXATION
ASTM DESIGNATION	A416	A416
ULTIMATE STRENGTH	270 KSI	270 KSI
TEMPORARY STRESS TO OVERCOME FRICTION	216 KSI	216 KSI
ANCHOR STRESS	189 KSI	189 KSI
EFFECTIVE STRESS	159 KSI	175 KSI
CONCRETE COVER	SEE PLAN	SEE PLAN
CONCRETE COVER	2 1/4" TO WEDGES	2 1/4" TO WEDGES

POST-TENSIONING DESIGN WAS PERFORMED USING LOW RELAXATION STRAND AND 1/2" DIAMETER UNBONDED TENDONS - TYPICAL U.N.O. SUPPLIER MAY SUBSTITUTE WITH STRESS RELIEVED STRAND PROVIDED THEY PERFORM AND SUBMIT THE NECESSARY CALCULATIONS.

SUPPLIER SHALL SUBMIT SHOP DRAWINGS AS PER SPECIFICATION. SUPPLIER SHALL SUBMIT CALCULATIONS FOR ALL FRICTION LOSSES AND TENDON ELONGATIONS FOR SPECIFIED STRESSING LENGTHS TO ENSURE MINIMUM FINAL EFFECTIVE FORCE IS MAINTAINED. THE SUPPLIER SHALL BASE ALL ELONGATION CALCULATIONS UPON THE MODULUS OF ELASTICITY SHOWN ON THE MILL CERTIFICATES FOR THE TENDONS BEING FURNISHED TO THE SITE. ALL TENDONS SHALL HAVE THEIR HEAT NUMBER MARKED ON THE TAG ATTACHED TO THE TENDON. AN APPROVED LABORATORY SHALL TEST ONE (1) SAMPLE OF EACH REEL. TEST RESULTS SHALL BE SUBMITTED TO THE STRUCTURAL ENGINEER AND BUILDING DEPARTMENT BEFORE STRESSING. CALCULATIONS REQUIRED BY THIS SECTION SHALL BE SEALED BY A REGISTERED ENGINEER AND SUBMITTED TO THE PROJECT STRUCTURAL ENGINEER FOR REVIEW PRIOR TO PROCEEDING WITH THE WORK.

THE CONTRACTOR RESPONSIBLE FOR THE PLACEMENT OF ALL POST-TENSIONING SHALL HAVE A MINIMUM EXPERIENCE LEVEL OF 3 YEARS OR 5 PROJECTS FOR THIS TYPE OF CONSTRUCTION.

HYDRAULIC STRESSING RAMS SHALL BE EQUIPPED WITH STRESSING GRIPPERS THAT WILL NOT NOTCH THE STRAND MORE SEVERELY THAN NORMAL ANCHORING WEDGES. STRESSING RAMS AND GAUGES SHALL BE INDIVIDUALLY IDENTIFIED AND CALIBRATED AGAINST KNOWN STANDARDS AT INTERVALS NOT EXCEEDING SIX MONTHS. CALIBRATION CERTIFICATES FOR EACH JACK USED SHALL BE AVAILABLE UPON REQUEST. FIELD READINGS OF ELONGATIONS AND/OR STRESSING FORCES SHALL NOT VARY MORE THAN 7% FROM CALCULATED REQUIRED VALUES. RECORDS OF ALL JACKING FORCES AND ELONGATIONS SHALL BE KEPT BY STRUCTURAL INSPECTOR AND SHALL BE PROMPTLY SUBMITTED TO THE STRUCTURAL ENGINEER.

ANCHORAGE HARDWARE SHALL BE PRECISION SURE-LOCK POST-TENSIONED ANCHORAGE AND COUPLING SYSTEMS IN ACCORDANCE WITH ICC ESR-2381, AS SUPPLIED BY PRECISION SURE-LOCK, INC. OR OTHER MANUFACTURE WITH CURRENT AND EQUIVALENT ICC APPROVAL. PLACE 2 #4 CONTINUOUS BARS AT EDGE OF SLAB BEHIND ANCHORS UNLESS NOTED OTHERWISE.

DRAPES SHALL CONFORM TO CONTROLLING POINTS SHOWN ON DRAWINGS AND SHOULD BE IN AN APPROXIMATELY PARABOLIC DRAPE BETWEEN SUPPORTS. DIMENSIONS LOCATE THE CENTER OF GRAVITY OF THE TENDON OR GROUP OF TENDONS UNLESS NOTED OTHERWISE ON DRAWINGS. LOW POINTS ARE AT MIDSPAN, UNLESS NOTED OTHERWISE. TWISTING OR ENTWINING OF INDIVIDUAL WIRES OR STRANDS WITHIN A BUNDLE OR A BEAM SHALL NOT BE PERMITTED. TENDONS SHALL BE SECURED TO A SUFFICIENT NUMBER OF POSITIONING DEVICES TO ENSURE CORRECT LOCATION DURING PLACEMENT OF CONCRETE, AND SHALL BE SPACED AT NOT MORE THAN 4'-0" O.C. ALL CHAIRS SHALL BE STAPLED TO FORMWORK TO PREVENT DISPLACEMENT DURING CONCRETE PLACEMENT. IF UNDERSIDE OF CONCRETE WILL REMAIN EXPOSED PER ARCHITECTURAL DRAWINGS, CONTRACTOR SHALL GRIND OFF VISIBLE STAPLE PROTRUSIONS UNLESS OTHERWISE APPROVED BY THE ARCHITECT. BANDED TENDONS SHALL BE SECURED TO FORMWORK WITH BOLSTERS IN LIEU OF INDIVIDUAL CHAIRS AT LOW DRAPE, TYPICAL. ALL #4 SUPPORT BARS SHALL BE LAPPED 2'-0" MINIMUM, TYPICAL U.N.O.

ALL POCKETS REQUIRED FOR ANCHORAGE SHALL BE REINFORCED SO AS NOT TO DECREASE THE STRENGTH OF THE STRUCTURE. ALL POCKETS SHALL BE WATERPROOF SO AS TO ELIMINATE WATER LEAKAGE THROUGH THE POCKET AND SHALL BE FILLED WITH NON-SHRINK MORTAR. ALL DAMAGE TO MASTIC SHEATHING AROUND TENDONS SHALL BE REPAIRED WITH TWO LAYERS OF POLYETHYLENE ADHESIVE TAPE, UNLESS NOTED OTHERWISE. EXCESS TENDON ENDS SHALL NOT BE REMOVED UNTIL THE STRUCTURAL ENGINEER APPROVES ELONGATIONS.

GROUT OR CONCRETE CONTAINING CHLORIDES SHALL NOT BE USED IN THE VICINITY OF THE TENDONS OR ANCHORS.

FOR ENCAPSULATED TENDONS IN CORROSIVE ENVIRONMENTS, THE EXPOSED STRAND AND WEDGE AREAS SHALL BE COATED WITH TENDON COATING MATERIAL COMPARABLE TO THAT USED OVER THE LENGTH OF THE TENDON AND A WATERTIGHT CAP SHALL BE APPLIED OVER THE COATED AREA. PRIOR TO INSTALLING THE POCKET MORTAR, THE INSIDE CONCRETE SURFACES OF THE POCKET SHALL BE COATED OR SPRAYED WITH A RESIN BONDING AGENT.

SLAB OR BEAMS MAY BE DE-SHORED WHEN ALL TENDONS HAVE BEEN STRESSED AND WHEN CONCRETE REACHES DESIGN STRENGTH, EXCEPT WHEN SHORING IS REQUIRED TO CARRY FLOORS ABOVE. CONTINUOUS SHORING SHALL BE PROVIDED IN BAYS WITH CLOSURE STRIPS. RESHORING SHALL BE SPACED AT 7'-0" O.C. MAXIMUM AND SHALL EXTEND TO FOUNDATION SLAB UNLESS OTHERWISE APPROVED BY THE STRUCTURAL ENGINEER.

ALL INSERTS AND SLEEVES SHALL BE CAST-IN-PLACE WHENEVER FEASIBLE. DRILLED OR POWDER DRIVEN FASTENERS WILL BE PERMITTED WHEN IT CAN BE SHOWN THAT THE INSERTS WILL NOT SPALL THE CONCRETE AND LOCATED SO AS TO AVOID THE TENDONS AND ANCHORAGES.

AT CONCRETE SLABS, CONTRACTOR SHALL PAINT ON FORMS ALONG TENDON LINES PRIOR TO PLACING CONCRETE TO IDENTIFY TENDON LOCATIONS ON BOTTOM OF SLAB.

TENDON STRESSING SEQUENCE SHALL BE AS FOLLOWS:

FLAT SLABS AND FLAT PLATES:
1. STRESS 50% BANDED TENDONS.
2. STRESS ALL UNIFORM TENDONS.
3. STRESS REMAINING BANDED TENDONS.
4. STRESS ALL SLAB SHRINKAGE AND TEMPERATURE TENDONS.

BEAM AND SLAB:
1. STRESS 50% BEAM TENDONS.
2. STRESS ALL UNIFORM SLAB TENDONS.
3. STRESS REMAINING BEAM TENDONS.
4. STRESS ALL SLAB SHRINKAGE AND TEMPERATURE TENDONS.

CONCRETE INSERTS:

THIN SLAB TYPE INSERTS SHALL BE GALVANIZED AND HAVE THE FOLLOWING MINIMUM WORKING LOADS (4:1 RATIO OF ULTIMATE TO WORKING VALUES IS ASSUMED):

	WORKING LOAD	
BOLT DIAMETER	SHEAR	TENSION
1/2"	1,000 LBS.	650 LBS.
5/8"	1,250 LBS.	700 LBS.
3/4"	1,600 LBS.	850 LBS.

COIL LOOP INSERTS SHALL BE GALVANIZED AND HAVE THE FOLLOWING MINIMUM WORKING LOADS (3:1 RATIO OF ULTIMATE TO WORKING VALUES IS ASSUMED):

	WORKING LOAD	
BOLT DIAMETER	SHEAR	TENSION
1/2"	2,200 LBS.	2,280 LBS.
5/8"	3,000 LBS.	3,620 LBS.
3/4"	3,100 LBS.	3,660 LBS.

THREADED COIL RODS, COIL NUTS, ETC., USED IN CONJUNCTION WITH CONCRETE INSERTS, SHALL HAVE A WORKING LOAD EQUAL TO OR GREATER THAN THE CORRESPONDING CONCRETE INSERT. CONTRACTOR SHALL SUBMIT MANUFACTURER'S SIZE AND STRENGTH DATA PRIOR TO CONSTRUCTION TO THE STRUCTURAL ENGINEER THRU THE ARCHITECT. VALUES LISTED ABOVE ARE FOR RICHMOND STRUCTURAL CONNECTION INSERTS.

UNLESS NOTED OTHERWISE ON THE DRAWINGS, MECHANICAL SPLICES FOR REINFORCING BARS SHALL UTILIZE BAR-LOCK COUPLER SYSTEMS PER ICC ESR-2495 OR APPROVED EQUIVALENT.

UNLESS NOTED OTHERWISE ON THE DRAWINGS, "THREADED COUPLERS" WHERE INDICATED FOR #11 BARS AND SMALLER SHALL BE DAYTON DBDI REINFORCING BAR MECHANICAL SPLICE SYSTEM PER ICC ESR-2649.

MASONRY:

GENERAL:

HOLLOW CONCRETE MASONRY UNITS SHALL CONFORM TO ASTM C90, MEDIUM WEIGHT, GRADE N, F'm = 1,500 PSI, RUNNING BOND, MORTAR TYPE S, 1,800 PSI. GROUT 2,000 PSI. MECHANICALLY VIBRATE GROUT IMMEDIATELY AFTER POURING AND AGAIN 5 TO 10 MINUTES LATER. PROVIDE CLEANOUTS IF GROUT LIFT EXCEEDS 5'-0" IN BLOCK WALLS. MAXIMUM GROUT LIFT SHALL BE 6'-0". WHEN APPROVED BY THE STRUCTURAL ENGINEER AND BUILDING OFFICIAL, GROUT LIFTS MAY BE GREATER THAN 6'-0" IF IT CAN BE DEMONSTRATED BY CONTRACTOR THAT THE GROUT SPACES CAN BE PROPERLY FILLED. FILL CELLS SOLIDLY WITH GROUT IN LIFTS AND STOP POURS 1 1/2" BELOW THE TOP OF A COURSE TO FORM A KEY AT POUR POINTS. UNLESS NOTED OTHERWISE ON THE PLANS, PLACE CONTROL JOINTS IN MASONRY WALLS SUCH THAT NO STRAIGHT RUNS OF WALL EXCEEDS 24'-0". CONTROL JOINTS SHALL NOT OCCUR AT WALL CORNERS, INTERSECTIONS, ENDS, WITHIN 24" OF CONCENTRATED POINTS OF BEARING OR JAMBS, OR OVER OPENINGS UNLESS SPECIFICALLY SHOWN ON THE STRUCTURAL DRAWINGS. ALL MASONRY BELOW FINISHED FLOOR OR GRADE SHALL BE GROUTED SOLID.

VERTICAL REINFORCING:

1 #5 IN CENTER OF GROUT AT CENTER OF WALL, CONTINUOUS FULL HEIGHT OF WALL AT ALL CORNERS, INTERSECTIONS, WALL ENDS, BEAM BEARINGS, JAMBS, EACH SIDE OF CONTROL JOINTS AND AT INTERVALS NOT TO EXCEED 48" O.C. UNLESS NOTED OTHERWISE. TIE AT 8'-0" VERTICALLY, WITH SINGLE WIRE LOOP TIE BY A.A. WIRE PRODUCTS COMPANY. DOWEL VERTICAL REINFORCING TO FOUNDATION WITH DOWELS TO MATCH VERTICAL REINFORCING.

HORIZONTAL REINFORCING:

2 #5 IN MINIMUM 8" DEEP GROUTED CONTINUOUS BOND BEAM AT ELEVATED FRAMING ASSEMBLIES. 1 #5 IN MINIMUM 8" DEEP GROUTED CONTINUOUS BOND BEAM AT TOP OF PARAPETS AND FREESTANDING WALLS. PLACE THESE BARS CONTINUOUS THRU CONTROL JOINTS PER TYPICAL DETAIL. TO MAINTAIN BOND BEAM CONTINUITY, INSTALL BENT BARS PER TYPICAL DETAILS TO MATCH HORIZONTAL BOND BEAM REINFORCING AT CORNERS AND INTERSECTIONS. STANDARD WEIGHT (NO. 9 GAGE WIRE) DUR-O-WAL OR DUR-O-WIRE (OR EQUIVALENT) LADDER TYPE JOINT REINFORCEMENT AT 16" O.C. ALL JOINT REINFORCING SHALL BE EITHER HOT-DIPPED GALVANIZED OR STAINLESS STEEL. FOR INTERIOR WALLS ONLY - JOINT REINFORCING MAY BE MILL GALVANIZED AT CONTRACTORS OPTION.

LAP SPLICES:

LAP SPLICES FOR VERTICAL AND HORIZONTAL REINFORCING SHALL BE PER TYPICAL DETAIL. DO NOT SPLICE WITHIN 8'-0" OF CONTROL JOINTS. LAP HORIZONTAL LADDER TYPE JOINT REINFORCING 12" MINIMUM.

FOR ADDITIONAL REINFORCING INFORMATION, SEE REINFORCING SECTION OF G.S.N., PLANS, SCHEDULES AND DETAILS.

MISCELLANEOUS LINTELS:

UNLESS NOTED OTHERWISE OR SHOWN, PROVIDE THE FOLLOWING LINTELS IN 8" MASONRY WALLS. USE THESE LINTEL ANGLES FOR OPENINGS REQUIRED BY OTHER DISCIPLINES (MECHANICAL, ELECTRICAL, PLUMBING, ETC.). PROVIDE MINIMUM 5" BEARING OF ANGLES ON JAMBS. SEE SKETCH BELOW WHERE THESE LINTEL ANGLES MAY BE USED. (NOTE: WHERE THE REQUIREMENTS OF THIS SKETCH ARE NOT POSSIBLE, NOTIFY THE STRUCTURAL ENGINEER PRIOR TO START OF MASONRY CONSTRUCTION.)

OPENING WIDTH	LINTEL ANGLES
0'-0" TO 3'-4"	2 - 3 1/2" X 2 1/2" X 1/4" (SLV) OR POWERS PS8-8"
3'-5" TO 4'-8"	2 - 3 1/2" X 3" X 1/4" (SLV) OR POWERS PS8-8"
4'-9" TO 6'-0"	2 - 3 1/2" X 3 1/2" X 1/4" OR POWERS PS8-12"
6'-1" OR GREATER	NOTIFY STRUCTURAL ENGINEER

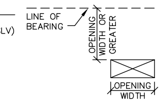

THESE LINTELS, OR THE OPENING THEY SPAN, SHALL NOT BE PLACED SO AS TO INTERFERE WITH THE REQUIREMENTS OF OTHER STRUCTURAL ELEMENTS (I.E. BOND BEAMS, LINTELS, CONTROL JOINTS, CONCENTRATED POINTS OF BEARING, ETC.) WITHOUT THE PRIOR APPROVAL OF THE STRUCTURAL ENGINEER.

SOLID GROUT SHALL BE PROVIDED BETWEEN WEBS AND MASONRY FACE SHELLS FOR FULL LENGTH OF ALL STEEL LINTELS. MORTAR MAY BE USED FOR GROUT FOR THIS PURPOSE ONLY. FACE UNITS, SOAPS, ROMANS, ETC., SHALL BE LAID WITH FULL HEAD AND BED JOINTS.

FOR ADDITIONAL INFORMATION AT OPENINGS IN MASONRY WALLS, SEE TYPICAL DETAILS.

REINFORCING:

ALL REINFORCING PER CRSI SPECIFICATIONS AND HANDBOOK. ASTM A615 (Fy = 75 KSI / GRADE 75) DEFORMED BARS FOR ALL BARS #5 AND LARGER. ASTM A615 (Fy = 60 KSI / GRADE 60) DEFORMED BARS FOR ALL BARS #4 AND SMALLER. WHERE SHOWN ON DRAWINGS ALL REINFORCING TO BE WELDED SHALL BE ASTM A706. WELDED WIRE FABRIC PER ASTM A185, WIRE PER ASTM A82. NO TACK WELDING OF REINFORCING BARS ALLOWED WITHOUT PRIOR REVIEW OF PROCEDURE WITH THE STRUCTURAL ENGINEER. LATEST ACI CODE AND DETAILING MANUAL APPLY. CLEAR CONCRETE COVERAGES AS FOLLOWS:

CAST AGAINST AND PERMANENTLY EXPOSED TO EARTH	3"
EXPOSED TO EARTH OR WEATHER	
#6 OR LARGER	2"
#5 AND SMALLER	1 1/2"
COLUMNS (TO TIES)	1 1/2"
BEAMS (TO STIRRUPS)	1 1/2"
MILD REINFORCED FLAT SLAB (TOP COVER)	3/4"
MILD REINFORCED FLAT SLAB (BOTTOM COVER)	1 1/4"
WALLS	SEE SCHEDULE AND/OR DETAILS
ALL OTHER PER LATEST EDITION OF ACI 318	

ALL REINFORCING SHALL BE CHAIRED TO ENSURE PROPER CLEARANCES. SUPPORT OF FOUNDATION REINFORCING MUST PROVIDE ISOLATION FROM MOISTURE/CORROSION BY USE OF A PLASTIC OR CONCRETE CHAIR. DUCT-TAPE COVERED REINFORCING IS NOT AN ACCEPTABLE CHAIR.

ALL DIMENSIONS REFERENCED IN DRAWINGS AS "CLEAR" SHALL BE FROM FACE OF STRUCTURE TO EDGE OF REINFORCING, AND SHALL NOT BE LESS THAN STATED, NOR GREATER THAN "CLEAR" DIMENSION PLUS 3/8". ALL OTHERS SHALL BE PLUS OR MINUS 1/4" TYPICAL UNLESS NOTED OTHERWISE.

FIELD BENDING OR STRAIGHTENING OF DEFORMED BARS SHALL BE LIMITED TO #5 BARS AND SMALLER AND SHALL BE FIELD BENT OR STRAIGHTENED ONLY ONCE. ANY BEND SHALL BE LIMITED TO 90 DEGREES. IF FIELD BENDING OR STRAIGHTENING OF #6 BARS OR LARGER IS REQUIRED, OR IF A SECOND BEND IS REQUIRED FOR #5 BARS AND SMALLER, HEAT SHALL BE APPLIED FOR BENDING OR STRAIGHTENING. CONTRACTOR SHALL SUBMIT PROCEDURE FOR APPLYING HEAT TO ENGINEER FOR REVIEW AND APPROVAL PRIOR TO BENDING OR STRAIGHTENING BARS.

LAP SPLICES IN CONCRETE:

ALL SPLICE LOCATIONS SUBJECT TO APPROVAL BY THE STRUCTURAL ENGINEER. PROVIDE BENT CORNER BARS TO MATCH AND LAP WITH HORIZONTAL BARS AT ALL CORNERS AND INTERSECTIONS PER TYPICAL DETAILS. REINFORCING BAR SPACING GIVEN ARE MAXIMUM ON CENTERS. DOWEL VERTICAL REINFORCING TO FOUNDATION WITH STANDARD 90-DEGREE HOOKS UNLESS NOTED OTHERWISE. SECURELY TIE ALL BARS IN LOCATION BEFORE PLACING CONCRETE. ONLY WHEN SPECIFICALLY NOTED ON DRAWINGS MAY CONCRETE COLUMN DOWEL EMBEDMENT BE A STANDARD COMPRESSION DOWEL WITH EMBEDMENT LENGTH ACCORDING TO THE LATEST EDITION OF THE ACI 318.

LAP SPLICES, UNLESS NOTED OTHERWISE, SHALL BE CLASS "B" TENSION LAP SPLICES PER LATEST EDITION OF ACI 318. ONLY WHEN SPECIFICALLY NOTED ON DRAWINGS MAY LAP SPLICES IN CONCRETE COLUMNS BE STANDARD COMPRESSION LAP SPLICES.

LAPS IN WELDED WIRE FABRIC SHALL BE MADE SO THAT THE OVERLAP, MEASURED BETWEEN OUTERMOST CROSS WIRES OF EACH FABRIC SHEET, IS NOT LESS THAN THE SPACING OF CROSS WIRES PLUS 2 INCHES.

DRYPACK:

DRYPACK SHALL BE 5,000 PSI NON-SHRINK GROUT, FIVE STAR OR EQUIVALENTS. INSTALL DRYPACK UNDER BEARING PLATES BEFORE FRAMING MEMBER IS INSTALLED. AT COLUMNS, INSTALL DRYPACK UNDER BASE PLATES AFTER THE STRUCTURAL STEEL FRAME HAS BEEN PLUMBED BUT PRIOR TO SUPPORTED DECKING BEING INSTALLED.

STRUCTURAL STEEL:

GENERAL:

ALL CONSTRUCTION PER LATEST AISC STEEL CONSTRUCTION MANUAL. ALL WIDE FLANGE STEEL SHALL BE ASTM A992 (Fy = 50 KSI). ALL PIPE STEEL SHALL BE ASTM A500 (Fy = 42 KSI) OR ASTM A53, TYPE E OR S, GRADE B (Fy = 35 KSI). ALL TUBE STEEL SHALL BE ASTM A500 (Fy = 46 KSI).
ALL MISCELLANEOUS STEEL UNLESS NOTED OTHERWISE SHALL BE ASTM A36 (Fy = 36 KSI). THE TERMS PIPE AND ROUND HOLLOW STRUCTURAL SHAPE (HSS) ARE USED SYNONYMOUSLY THROUGHOUT THESE DOCUMENTS ALONG WITH THE TERMS TUBE STEEL AND RECTANGULAR OR SQUARE HSS.

ALL STRUCTURAL ROLLED STEEL MEMBERS WITH Fy GREATER THAN 36 KSI ARE TO BE IDENTIFIED WITH AN ASTM SPECIFICATION MARK OR TAG PER IBC SEC. 2203.1.

UNLESS NOTED OTHERWISE, ALL BOLTS SHALL BE ASTM A307. ALL BOLTS SHALL BE INSTALLED WITH STEEL WASHERS AT SHORT SLOTTED HOLES USING SNUG TIGHT INSTALLATION, UNLESS NOTED OTHERWISE.

ANCHOR RODS:

ANCHOR RODS INCLUDE HOOKED, HEADED, AND THREADED AND NUTTED ANCHORS. THE TERMS ANCHOR BOLT AND ANCHOR ROD ARE USED SYNONYMOUSLY THROUGHOUT THESE DOCUMENTS. ALL ANCHOR ROD MATERIAL SHALL BE PER ASTM F1554 GRADE 36. A307 ANCHOR RODS MAY BE SUBSTITUTED FOR ASTM F1554 GRADE 36 AT CONTRACTOR'S OPTION. ALL ANCHOR RODS SHALL BE INSTALLED WITH STEEL WASHERS AT OVERSIZED ROUND HOLES USING SNUG TIGHT INSTALLATION, UNLESS NOTED OTHERWISE.

THE ANCHORING MECHANISM FOR NUTTED ANCHOR RODS SHALL CONSIST OF DOUBLE NUTS WITH A WASHER BETWEEN. THE NUTS AND WASHER ARE TO BE EMBEDDED INTO THE CONCRETE PER THE DETAILS AND PLANS. THE WASHER SHALL BE 1/4"X4"X4" U.N.O. THE CONTRACTOR SHALL PREVENT THE NUTS FROM SPINNING OFF DURING THE VIBRATION OF THE CONCRETE. THIS COULD BE ACCOMPLISHED BY TIGHTENING THE NUTS AGAINST EACH OTHER THEREBY LOCKING THEM IN PLACE OR BY TACK WELDING EACH NUT TO THE ANCHOR ROD.

WHERE THE ANCHORS ARE TO BE GALVANIZED, THE ANCHOR ROD AND THE NUTS SHALL BE GALVANIZED WITH THE SAME PROCESS TO ENSURE THE THREADS MATCH.

AT CONTRACTOR'S OPTION HEADED ANCHORS PER ABOVE MAY BE SUBSTITUTED FOR CONVENTIONAL ANCHORS AND MACHINE BOLTS (REVERSE SUBSTITUTION NOT ALLOWABLE).

EXPANSION AND EPOXY ANCHORS:

ALL EXPANSIVE ANCHORAGE FOR CONCRETE INSTALLATION ONLY SHALL BE PER SIMPSON 'STRONG-BOLT' 2 WEDGE ANCHOR (ICC ESR-3037) OR APPROVED EQUIVALENT. ALL EXPANSIVE ANCHORAGE FOR MASONRY INSTALLATION ONLY SHALL BE PER SIMPSON 'WEDGE-ALL' ANCHOR (ICC ESR-1396) OR APPROVED EQUIVALENT. ALL ADHESIVE (EPOXY) ANCHORAGE FOR CONCRETE SHALL BE PER SIMPSON 'SET-XP' SYSTEM WITH DUAL SIDE BY SIDE CARTRIDGES (ICC ESR-2508) OR APPROVED EQUIVALENT. ALL ADHESIVE (EPOXY) ANCHORAGE FOR MASONRY SHALL BE PER SIMPSON 'SET' SYSTEM WITH DUAL SIDE BY SIDE CARTRIDGES (ICC ESR-1772) OR APPROVED EQUIVALENT. ALL ANCHORS SHALL BE INSTALLED WITH STEEL WASHERS AT SHORT SLOTTED HOLES AND TIGHTENED/TORQUED PER MANUFACTURERS RECOMMENDATIONS.

HIGH STRENGTH BOLTS:

ALL HIGH STRENGTH BOLTS SHALL BE ASTM A325N AND SHALL BE INSTALLED AS BEARING TYPE CONNECTIONS WITH THREADS INCLUDED IN SHEAR PLANE. INSTALL WASHERS AND TIGHTEN "SNUG TIGHT" PER AISC SPECIFICATIONS. NO DIRECT TENSION INDICATOR TIGHTENING DEVICES OR ALTERNATE DESIGN FASTENERS ARE PERMITTED WITH "SNUG TIGHT" APPLICATIONS WITHOUT PRIOR APPROVAL OF THE STRUCTURAL ENGINEER. FOR ADDITIONAL INFORMATION, SEE ABOVE.

WELDING:

UNLESS NOTED OTHERWISE, ALL WELDS PER LATEST EDITION OF THE AWS STANDARDS. ALL WELDING SHALL BE PERFORMED BY WELDERS HOLDING VALID CERTIFICATES AND HAVING CURRENT EXPERIENCE IN THE TYPE OF WELD SHOWN ON THE DRAWINGS OR NOTES. CERTIFICATES SHALL BE THOSE ISSUED BY AN ACCEPTED TESTING AGENCY. ALL WELDING DONE BY E70 SERIES LOW HYDROGEN RODS UNLESS NOTED OTHERWISE. FOR GRADE 60 REINFORCING BARS, USE E90 SERIES. THESE DRAWINGS DO NOT DISTINGUISH BETWEEN SHOP AND FIELD WELDS; THE CONTRACTOR MAY SHOP WELD OR FIELD WELD AT THEIR DISCRETION. SHOP WELDS AND FIELD WELDS SHALL BE SHOWN ON THE SHOP DRAWINGS SUBMITTED FOR REVIEW.

HIGH STRENGTH HEADED STUDS SHALL BE AUTOMATIC WELDED CONFORMING TO ALL REQUIREMENTS OF THE LATEST EDITION OF THE "RECOMMENDED PRACTICES FOR STUD WELDING". CONFORMANCE SHALL INCLUDE, BUT NOT BE LIMITED TO, ALL QUALITY CONTROL TESTING PROVISIONS OF THE AFOREMENTIONED PUBLICATIONS

ALL FULL (COMPLETE) PENETRATION WELDS SHALL BE TESTED AND CERTIFIED BY AN INDEPENDENT TESTING LABORATORY.

CONTINUED...

ABBREVIATIONS

NOTE: ABBREVIATIONS MAY OR MAY NOT HAVE PERIODS, BUT SHALL BE READ AS SAME.

A.B.	ANCHOR BOLT
A.B.C.	AGGREGATE BASE COURSE
ACI	AMERICAN CONCRETE INSTITUTE
A/C	AIR CONDITIONER
A.F.F.	ABOVE FINISHED FLOOR
AISC	AMERICAN INSTITUTE OF STEEL CONSTRUCTION
AISI	AMERICAN IRON AND STEEL INSTITUTE
AITC	AMERICAN INSTITUTE OF TIMBER CONSTRUCTION
ALT.	ALTERNATE
ANSI	AMERICAN NATIONAL STANDARDS INSTITUTE
APA	AMERICAN PLYWOOD ASSOCIATION
ARCH'L	ARCHITECTURAL
ASTM	AMERICAN SOCIETY FOR TESTING AND MATERIALS
AWS	AMERICAN WELDING SOCIETY
A.W.T.S.	AUTOMATIC WELDED THREADED STUDS
BM	BEAM
B.F.F	BELOW FINISHED FLOOR
BLK	BLOCK
B.O.B.	BOTTOM OF BEAM
B.O.D.	BOTTOM OF DECK
B.O.F.	BOTTOM OF FOOTING
BRG	BEARING
C	CAMBER
C.C.	CENTERLINE TO CENTERLINE
CFS	COLD FORMED STEEL
C.G.	CENTER OF GRAVITY
C.I.P.	CAST IN PLACE
C.L.	CENTERLINE
C.L.B.	CENTERLINE OF BEAM
C.L.C.	CENTERLINE OF COLUMN
C.L.F.	CENTERLINE OF FOOTING
C.L.W.	CENTERLINE OF WALL
CLR	CLEAR
CONC	CONCRETE
CONC C.J.	CONCRETE CONTROL JOINT
CONC S.J.	CONCRETE SAWCUT JOINT
C.M.U.	CONCRETE MASONRY UNIT
CONN	CONNECTION
CONT	CONTINUOUS
CRSI	CONCRETE REINFORCING STEEL INSTITUTE
D.F. (D.F.L.)	DOUGLAS FIR LARCH
DL	DEAD LOAD
DIA	DIAMETER
DN	DOWN
DWG(S)	DRAWING(S)
E.C.	END TO CENTERLINE
E.E.	END TO END
E.O.S.	EDGE OF SLAB
EQ	EQUAL
EQUIP	EQUIPMENT
EXP. BOLT (E.B.)	EXPANSION BOLT
EXP. JT (E.J.)	EXPANSION JOINT
E.W.	EACH WAY
F.F.	FINISHED FLOOR
F.O.M.	FACE OF MEMBER
F.O.S.	FACE OF STEEL
F.O.W.	FACE OF WALL
GA	GAGE (UNIT OF MEASUREMENT)
GALV	GALVANIZED
G.S.N.	GENERAL STRUCTURAL NOTES
GLB (GLULAM)	GLUED-LAMINATED BEAM
H.F.	HEM FIR
HORIZ	HORIZONTAL REINFORCING
H.S.	HEADED STUDS
IBC	INTERNATIONAL BUILDING CODE
ICBO	INTERNATIONAL CONFERENCE OF BUILDING OFFICIALS
ICC	INTERNATIONAL CODE COUNCIL
ICF	INSULATED CONCRETE FORMS
I.F.W.	INSIDE FACE OF WALL
I.O.D.	INTERPRETATION OF DRAWINGS
JST	JOIST
K(KIP)	1000 POUNDS
KLF	KIPS PER LINEAR FOOT
LBS (#)	POUNDS
LGR	LEDGER
LGS	LIGHT GAGE STEEL
LGSEA	LIGHT GAGE STEEL ENGINEERS ASSOCIATION
L.O.D.	LOCATION OF DETAILS
LL	LIVE LOAD
LLH	LONG LEG HORIZONTAL
LLV	LONG LEG VERTICAL
MAS	MASONRY
MAS C.J.	MASONRY CONTROL JOINT
MAX	MAXIMUM
MBMA	METAL BUILDING MANUFACTURERS ASSOCIATION
MECH'L	MECHANICAL
MFR'D	MANUFACTURERED
MFR('S)	MANUFACTURER('S)
MIN	MINIMUM
N/A	NOT APPLICABLE
N.T.S.	NOT TO SCALE
O.C.	ON CENTER
O.F.W.	OUTSIDE FACE OF WALL
OPP	OPPOSITE
OSHA	OCCUPATIONAL SAFETY AND HEALTH ADMINISTRATION
PCI	PRECAST/PRESTRESSED CONCRETE INSTITUTE
P.C.	PRECAST CONCRETE
PCF	POUNDS PER CUBIC FOOT
PLF	POUNDS PER LINEAR FOOT
±	PLUS OR MINUS
PREFAB	PREFABRICATED
PSF	POUNDS PER SQUARE FOOT
PSI	POUNDS PER SQUARE INCH
PT	POST-TENSIONED
PTI	POST-TENSIONING INSTITUTE
REINF	REINFORCING
SDI	STEEL DECK INSTITUTE
SLH	SHORT LEG HORIZONTAL
SLV	SHORT LEG VERTICAL
SJI	STEEL JOIST INSTITUTE
SIM	SIMILAR
SQ.	SQUARE
SSMA	STEEL STUD MANUFACTURERS ASSOCIATION
STD	STANDARD
STL	STEEL
TL	TOTAL LOAD
T.O.B.	TOP OF BEAM
T.O.C.T.	TOP OF CONCRETE TOPPING
T.O.D.	TOP OF DECK
T.O.F.	TOP OF FOOTING
T.O.L.	TOP OF LEDGER
T.O.M.	TOP OF MASONRY
T.O.P.	TOP OF PLATE
T.O.P.C.	TOP OF PRECAST CONCRETE
T.O.S.	TOP OF STEEL
T.O.W.	TOP OF WALL
TPI	TRUSS PLATE INSTITUTE
TYP	TYPICAL
T&G	TONGUE AND GROOVE
UBC	UNIFORM BUILDING CODE
U.N.O.	UNLESS NOTED OTHERWISE
VERT	VERTICAL REINFORCING
WCLA	WEST COAST LUMBER ASSOCIATION
WCLIB	WEST COAST LUMBER INSPECTION BUREAU
W.W.F.	WELDED WIRE FABRIC
WWPA	WESTERN WOOD PRODUCTS ASSOCIATION
W/	WITH
W/C	WATER TO CEMENT RATIO
W/O	WITHOUT

LOCATION OF DETAILS

DETAILS	SHEET	DESCRIPTION
S0.1 & S0.2		GENERAL STRUCTURAL NOTES
01-19	S0.3	TYPICAL DETAILS
101-119	S2.1	FOUNDATION DETAILS
121-139	S2.2	FOUNDATION DETAILS
201-219	S3.1	FLOOR FRAMING DETAILS
221-239	S3.2	FLOOR FRAMING DETAILS
301-319	S4.1	ROOF FRAMING DETAILS
321-339	S4.2	ROOF FRAMING DETAILS
S510, S520, S530		STAIR PLANS
S511, S521, S531		STAIR SECTIONS
401-419	S5.4	STAIR DETAILS
421-439	S5.5	STAIR DETAILS

FINAL FOR CONSTRUCTION - 05/18/15

AWBREY
COOK
MCGILL
architects
1045 14th Street, Suite 100
San Diego, CA 92101-5701
Phone: 619 . 398 . 3480

ARCHITECTS:
THOMAS B. AWBREY C 17578
CLIFFORD W. COOK C 19705
SCOT W. McGILL C 21059

Registered Professional Engineer (Structural)
CERTIFICATE NO.
42194
BRADY K.
NOTBOHM
Date Signed 8/22/14
ARIZONA, U.S.A.
EXPIRES 03-31-17

Copyright © 2014
AWBREY COOK MCGILL ARCHITECTS
All ideas, designs, and arrangements indicated on these drawings are the property of AWBREY COOK MCGILL ARCHITECTS and are intended to be used in connection with this specific project only and shall not otherwise be used for any purpose whatsoever without the written consent of the architects. There shall be no changes or deviations from these drawings or the accompanying specifications without the written consent of the architects.

CONSULTANTS:

CARUSO
TURLEY
SCOTT
INC.
consulting
structural
engineers
1215 W. Rio Salado Pkwy
Suite 200
Tempe, Arizona 85281
(480) 774-1700
(480) 774-1701 FAX
www.ctsaz.com

ENGINEER: TRM/BKN - JOB NUMBER: 13-112

REVISIONS:

△1 PLAN CHECK CORRECTIONS 2/28/14

THESE DRAWINGS/CALCULATIONS ARE CONSIDERED PRELIMINARY –NOT FOR CONSTRUCTION OR RECORDING UNLESS THE STRUCTURAL ENGINEER OF RECORD'S SEAL IS AFFIXED WITH WRITTEN SIGNATURE.

PROJECT:
MARRIOTT RESIDENCE INN
- COURTYARD @ LUHRS
A Development of - LUHRS CM, LLC
Phoenix, Arizona

DRAWN: SMV
CHECKED: BKN/TRM
DATE: 12/16/13
PROJECT NO.: 12-1601

SHEET TITLE:
GENERAL STRUCTURAL NOTES (CONTINUES)

SHEET NO.:
S0.1

C:\Users\dfrl18\Documents\JOBS\13112\13-112S01.dwg, 8/20/2014 3:08:09 PM

GENERAL STRUCTURAL NOTES (CONTINUED)

Applies unless noted otherwise on drawings

STEEL DECKING:

GENERAL:

ALL STEEL DECK SHALL BE MANUFACTURED AND ERECTED IN ACCORDANCE WITH LATEST EDITION OF SDI AND ICC ESR-1735P OR APPROVED EQUIVALENT. STEEL DECK SHALL BEAR ON SUPPORTS A MINIMUM OF 2 INCHES. ENDS OF SHEETS MUST BE LAPPED A MINIMUM OF 2 INCHES OVER SUPPORTS.

WELDERS EXPERIENCED IN LIGHT GAGE STEEL DECK WORK SHALL PERFORM ALL WELDING. DECK WELDING MAY BE ACHIEVED WITH E60 SERIES NON LOW HYDROGEN RODS (MINIMUM).

SCREWS WHERE INDICATED SHALL BE #12-24 TRAXX PER ICC ER-3056 OR APPROVED EQUIVALENT.

ROOF DECK:

DECK SHALL BE 1 1/2" DEEP, 36" WIDE, 20 GAGE GALVANIZED STEEL, WITH MINIMUM YIELD STRESS OF 38 KSI, WITH MINIMUM S = 0.248 IN3 AND I = 0.216 IN4 PER FOOT OF WIDTH. DECK SHALL BE ERECTED IN ACCORDANCE WITH MANUFACTURER'S RECOMMENDATIONS AS 2 SPAN MINIMUM AND SHALL BE ATTACHED FOR A MINIMUM DIAPHRAGM SHEAR CAPACITY OF 359 PLF USING THE FOLLOWING MINIMUM ATTACHMENTS:

WELD DECK TO SUPPORTING MEMBERS WITH 4 – 1/2" DIAMETER OR 3/8" X 1" PUDDLE WELDS PER SHEET AT ENDS, END LAPS AND AT INTERMEDIATE SUPPORTS, AND AT 18" O.C. AT PERIMETER BEAMS AND OPENING EDGES RUNNING PARALLEL TO THE DECK. SIDE SEAM ATTACHMENT SHALL BE BUTTON PUNCHES AT 24" O.C.

CANOPY ROOF DECK:

DECK SHALL BE 1 1/2" DEEP, 36" WIDE, 20 GAGE GALVANIZED STEEL, WITH MINIMUM YIELD STRESS OF 38 KSI, WITH MINIMUM S = 0.248 IN3 AND I = 0.216 IN4 PER FOOT OF WIDTH. DECK SHALL BE ERECTED IN ACCORDANCE WITH MANUFACTURER'S RECOMMENDATIONS AS 2 SPAN MINIMUM AND SHALL BE ATTACHED USING THE FOLLOWING MINIMUM ATTACHMENTS:

SCREW DECK TO SUPPORTING MEMBERS WITH 4 – SCREWS WITH NEOPRENE WASHERS PER SHEET AT ENDS, END LAPS AND AT INTERMEDIATE SUPPORTS, AND AT 12" O.C. AT PERIMETER BEAMS AND OPENING EDGES RUNNING PARALLEL TO THE DECK. SIDE SEAM ATTACHMENT SHALL BE SCREWS WITH NEOPRENE WASHERS SPACED AT 24" O.C.

COMPOSITE FLOOR DECK:

DECK SHALL BE 1 1/2" DEEP, 36" WIDE, 18 GAGE PHOSPHATIZED STEEL, WITH MINIMUM YIELD STRESS OF 38 KSI, WITH MINIMUM S = 0.355 IN3 AND I = 0.302 IN4 PER FOOT OF WIDTH. DECK SHALL BE DEFORMED/INDENTED TO PROVIDE A MECHANICAL BOND WITH THE CONCRETE. DECK SHALL BE ERECTED IN ACCORDANCE WITH MANUFACTURER'S RECOMMENDATIONS AS 2 SPAN MINIMUM (SINGLE SPAN CONDITIONS NOT PERMITTED) USING THE FOLLOWING MINIMUM ATTACHMENTS:

WELD DECK TO SUPPORTING MEMBERS WITH 4 – 1/2" DIAMETER OR 3/8" X 3/4" PUDDLE WELDS PER SHEET AT ENDS, END LAPS AND AT INTERMEDIATE SUPPORTS, AND AT 18" O.C. AT PERIMETER BEAMS AND OPENINGS EDGES RUNNING PARALLEL TO THE DECK. SIDE SEAM ATTACHMENT SHALL BE BUTTON PUNCHES AT 24" O.C.

COLD FORMED STRUCTURAL STEEL FRAMING:

GENERAL:

ALL COLD FORMED STEEL COMPONENTS INDICATED ON THE STRUCTURAL DRAWINGS SHALL BE PER SSMA. COMPONENTS SHALL BE FABRICATED AND ERECTED IN ACCORDANCE WITH MANUFACTURER'S RECOMMENDATIONS AND IN ACCORDANCE WITH THE LATEST EDITION OF "SPECIFICATIONS FOR THE DESIGN OF COLD-FORMED STEEL STRUCTURAL MEMBERS" BY THE AISI. STEEL FOR COLD FORMED MEMBERS SHALL HAVE A MINIMUM YIELD STRENGTH OF 33 KSI FOR 43 MIL THICKNESS AND LESS, AND MINIMUM YIELD STRENGTH OF 50 KSI FOR 54 MIL THICKNESS AND GREATER. STEEL FOR BRIDGING SHALL HAVE A MINIMUM YIELD STRENGTH OF 33 KSI. STEEL SHALL BE GALVANIZED AT LOCATIONS EXPOSED TO WEATHER AND WHEREVER NOTED.

WHERE WELDING IS SHOWN ON DRAWINGS IT SHALL BE PERFORMED BY WELDERS EXPERIENCED IN LIGHT GAGE STRUCTURAL STEEL FRAMING WORK. DO NOT NOTCH FLANGES OF MEMBERS WITHOUT EXPRESSED APPROVAL OF THE ENGINEER OF RECORD.

SCREWED COLD FORMED TO COLD FORMED CONNECTIONS (I.E.: 97 MIL TO 97 MIL MAX) SHALL BE HILTI "KWIK-PRO" SELF-DRILLING TAPPING SCREWS PER ICC ESR-2196, OR ICC APPROVED EQUIVALENT. SCREW SIZE SHALL BE #10 X 3/4" MINIMUM AND MUST PROTRUDE THROUGH AND BEYOND THE CONNECTED STEEL MEMBERS A MINIMUM OF THREE FULL THREADS. SCREWS SHALL BE INSTALLED WITH A MINIMUM EDGE AND END DISTANCE OF THREE SCREW DIAMETERS.

MIL THICKNESS / GAGE NUMBER REFERENCE:

27 MIL ------ 22 GA
33 MIL ------ 20 GA
43 MIL ------ 18 GA
54 MIL ------ 16 GA
68 MIL ------ 14 GA
97 MIL ------ 12 GA

WALLS:

STRUCTURAL STEEL STUD WALLS SHOWN ON PLAN SHALL BE INSTALLED PER STUD/SPACING AS NOTED BELOW, AND BOTTOM TRACKS SHALL BE INSTALLED WITH 1/2" DIA ANCHOR BOLTS AT 2'-8" O.C. TYPICAL U.N.O. ATTACHMENT OF STUDS TO TRACKS PER TYPICAL DETAILS U.N.O. ALL STUDS SHALL BE SECURELY SEATED FOR FULL END BEARING ON TOP AND BOTTOM TRACK. UNLESS NOTED OTHERWISE, INSTALL DOUBLE STUDS AT ALL JAMBS, CORNERS, INTERSECTIONS AND ISOLATED BEARING POINTS OF FRAMING MEMBERS ABOVE. BRIDGING SHALL BE INSTALLED PER MANUFACTURER'S RECOMMENDATION WITH THE FOLLOWING MINIMUM REQUIREMENTS:

FOR AXIAL LOAD BEARING WALLS, INSTALL BRIDGING PER TYPICAL DETAILS. FOR WALLS WITH NO AXIAL LOAD, INSTALL BRIDGING AT MID-HEIGHT FOR WALLS LESS THAN OR EQUAL TO 10'-0" HIGH, AND 5'-0" O.C. MAXIMUM FOR WALLS GREATER THAN 10'-0" HIGH. IN ADDITION, BRIDGING SHALL BE INSTALLED AT ROOF LINES AND ELSEWHERE AS NOTED ON THE DRAWINGS. SOLID BLOCKING SHALL BE INSTALLED IN LIEU OF BRIDGING WHERE NOTED ON THE DRAWINGS. FOR NON-BEARING PARTITIONS AND SOFFITS, SEE ARCHITECTURAL DRAWINGS.

SSMA STRUCTURAL STEEL STUDS AND TRACKS SHALL BE AS FOLLOWS – TYPICAL U.N.O.:

STUD SIZE-MILS	SPACING	TRACK SIZE-MILS
3 5/8" – 362S162-43	16" O.C	362T125-54
4" – 400S162-43	16" O.C.	400T125-54
6" – 600S162-43	16" O.C.	600T125-54

△1

SSMA NON-STRUCTURAL/NON-BEARING INTERIOR STEEL STUDS AND TRACKS SHALL BE AS FOLLOWS – TYPICAL U.N.O.: (DESIGN BASIS = 10 PSF INTERIOR LOAD, DEFLECTION LIMIT = L/240).

MAX WALL HEIGHT	STUD SIZE-MILS	STUD SPACING	TRACK SIZE-MILS
0'-0" TO 10'-2"	3 5/8" 362S125-30	24" O.C	362T125-30
10'-3" TO 12'-3"	3 5/8" 362S125-30	16" O.C.	362T125-30
12'-4" TO 14'-5"	6" 600S125-30	24" O.C.	600T125-30
14'-6" TO 17'-8"	6" 600S125-30	16" O.C.	600T125-30

17'-9" AND GREATER – NOTIFY STRUCTURAL ENGINEER

FOR ADDITIONAL INFORMATION, SEE ARCHITECTURAL DRAWINGS.

JOISTS:

SSMA JOIST SIZE AND SPACING SHALL BE AS NOTED ON PLANS OR DETAILS. ALL JOISTS SHALL BE SECURELY SEATED FOR FULL END BEARING AT SUPPORTING MEMBER. PROVIDE BLOCKING AT SUPPORTS OF ALL JOISTS. DOUBLE UP FLOOR JOISTS AND BLOCKING UNDER LOAD BEARING PARTITIONS UNLESS NOTED OTHERWISE.

MISCELLANEOUS STEEL FRAMING:

PERFORMANCE SPECIFICATION FOR ALTERNATIVE STAIRS DESIGN:

CONTRACTOR MAY SUBMIT AN ALTERNATIVE STAIR DESIGN. STAIRS SHALL BE DESIGNED FOR SELF WEIGHT PLUS A LIVE LOAD EQUAL TO 100 PSF. CONTRACTOR SHALL SUBMIT SHOP DRAWINGS WITH DESIGN CALCULATIONS SEALED BY A REGISTERED ENGINEER FOR REVIEW AND APPROVAL PRIOR TO FABRICATION.

STEEL GRATING:

UNLESS NOTED OTHERWISE IN ARCHITECTURAL SPECIFICATIONS, USE GALVANIZED STEEL GRATING WITH 3 1/2" X 3/8" BEARING BARS AT 1 3/16" O.C. AND CROSS BARS AT 4" O.C. GRATING SHALL BE ERECTED AND ATTACHED PER MANUFACTURER'S RECOMMENDATIONS.

SHOP DRAWINGS:

SHOP DRAWINGS SHALL BE SUBMITTED FOR ALL STRUCTURAL ITEMS IN ADDITION TO ITEMS REQUIRED BY ARCHITECTURAL SPECIFICATIONS. CONTRACTOR SHALL PROVIDE A MINIMUM OF 2 HARD COPY SUBMITTAL SETS OF EACH ITEM TO CTS FOR REVIEW, UNLESS NOTED OTHERWISE IN ARCHITECTURAL SPECIFICATIONS. ELECTRONIC SUBMITTALS ARE ALSO ACCEPTABLE.

THE CONTRACTOR SHALL REVIEW ALL SHOP DRAWINGS PRIOR TO SUBMITTAL. ITEMS NOT IN ACCORDANCE WITH CONTRACT DOCUMENTS SHALL BE FLAGGED UPON CONTRACTOR'S REVIEW.

VERIFY ALL DIMENSIONS WITH ARCHITECTURAL DRAWINGS AND FIELD CONDITIONS.

MANUFACTURER OR FABRICATOR SHALL CLOUD ANY CHANGES, SUBSTITUTIONS, OR DEVIATIONS FROM CONTRACT DOCUMENTS. ANY OF THE AFOREMENTIONED WHICH ARE NOT CLOUDED OR FLAGGED BY SUBMITTING PARTIES, SHALL NOT BE CONSIDERED APPROVED AFTER ENGINEER'S REVIEW, UNLESS NOTED ACCORDINGLY.

THE ENGINEER HAS THE RIGHT TO APPROVE OR DISAPPROVE ANY CHANGES TO CONTRACT DOCUMENTS AT ANYTIME BEFORE OR AFTER SHOP DRAWING REVIEW.

THE SHOP DRAWINGS DO NOT REPLACE THE CONTRACT DOCUMENTS. ITEMS OMITTED OR SHOWN INCORRECTLY AND ARE NOT FLAGGED BY THE STRUCTURAL ENGINEER OR ARCHITECT SHALL NOT BE CONSIDERED CHANGES TO CONTRACT DOCUMENTS. IT IS THE CONTRACTOR'S RESPONSIBILITY TO ENSURE ITEMS ARE CONSTRUCTED TO CONTRACT DOCUMENTS.

THE ADEQUACY OF ENGINEERING DESIGNS AND LAYOUT PERFORMED BY OTHERS RESTS WITH THE DESIGNING OR SUBMITTING AUTHORITY.

REVIEWING IS INTENDED ONLY AS AN AID TO THE CONTRACTOR IN OBTAINING CORRECT SHOP DRAWINGS. RESPONSIBILITY FOR CORRECTNESS SHALL REST WITH THE CONTRACTOR.

DEFERRED SUBMITTALS:

SHOP DRAWING SUBMITTALS REQUIRED BY THESE GENERAL STRUCTURAL NOTES WHICH CONTAIN DESIGN CALCULATIONS SEALED BY A REGISTERED ENGINEER OTHER THAN THE ENGINEER OF RECORD, SHALL BE SUBMITTED DURING CONSTRUCTION TO THE CITY FIELD INSPECTOR FOR REVIEW. THE DOCUMENTS WILL FIRST BE REVIEWED BY THE ENGINEER OF RECORD AND DETERMINED TO BE IN GENERAL CONFORMANCE WITH THE BUILDING DESIGN. THESE DEFERRED SUBMITTAL ITEMS SHALL NOT BE INSTALLED UNTIL THEIR DESIGN AND SUBMITTAL DOCUMENTS HAVE BEEN APPROVED BY THE BUILDING OFFICIAL. THE FOLLOWING ITEMS SHALL BE SUBMITTED PER THIS SECTION:

ALTERNATIVE STAIR DESIGNS
POST-TENSIONED CONCRETE

GENERAL NOTES:

THE STRUCTURAL CONSTRUCTION DOCUMENTS REPRESENT THE FINISHED STRUCTURE. EXCEPT WHERE NOTED, THEY DO NOT INDICATE THE METHOD OF CONSTRUCTION. THE CONTRACTOR SHALL PROVIDE ALL MEASURES NECESSARY TO PROTECT THE STRUCTURE DURING CONSTRUCTION. SUCH MEASURES SHALL INCLUDE, BUT NOT BE LIMITED TO, BRACING, SHORING FOR LOADS DUE TO CONSTRUCTION EQUIPMENT, ETC. THE STRUCTURAL ENGINEER OF RECORD SHALL NOT BE RESPONSIBLE FOR THE CONTRACTOR'S MEANS, METHODS, TECHNIQUES, SEQUENCES FOR PROCEDURE OF CONSTRUCTION, OR THE SAFETY PRECAUTIONS AND THE PROGRAMS INCIDENT THERETO (NOR SHALL OBSERVATION VISITS TO THE SITE INCLUDE INSPECTION OF THESE ITEMS).

WHERE REFERENCE IS MADE TO VARIOUS TEST STANDARDS FOR MATERIALS, SUCH STANDARDS SHALL BE THE LATEST EDITION AND/OR ADDENDA. ANY ENGINEERING DESIGN, PROVIDED BY OTHERS AND SUBMITTED FOR REVIEW, SHALL BEAR THE SEAL OF A REGISTERED ENGINEER RECOGNIZED BY THE BUILDING CODE JURISDICTION OF THIS PROJECT.

NOTES AND DETAILS ON DRAWINGS SHALL TAKE PRECEDENCE OVER GENERAL STRUCTURAL NOTES AND TYPICAL DETAILS. WHERE NO DETAILS ARE SHOWN, CONSTRUCTION SHALL CONFORM TO SIMILAR WORK ON THE PROJECT, AND/OR AS PROVIDED FOR IN THE CONTRACT DOCUMENTS. WHERE DISCREPANCIES OCCUR BETWEEN PLANS, DETAILS, GENERAL STRUCTURAL NOTES AND SPECIFICATIONS, THE GREATER REQUIREMENTS SHALL GOVERN.

CONTRACTOR SHALL BE RESPONSIBLE FOR VERIFICATION OF ALL DIMENSIONS WITH ARCHITECTURAL DRAWINGS PRIOR TO START OF CONSTRUCTION. RESOLVE ANY DISCREPANCY WITH THE ARCHITECT. ESTABLISH AND VERIFY ALL OPENINGS AND INSERTS FOR ARCHITECTURAL, CIVIL, MECHANICAL, PLUMBING AND ELECTRICAL ITEMS WITH THE APPROPRIATE TRADE DRAWINGS AND SUBCONTRACTORS PRIOR TO CONSTRUCTION.

TYPICAL DETAILS MAY NOT NECESSARILY BE CUT ON PLANS, BUT APPLY UNLESS NOTED OTHERWISE.

CONSTRUCTION MATERIALS SHALL BE SPREAD OUT IF PLACED ON FRAMED CONSTRUCTION. LOAD SHALL NOT EXCEED THE DESIGN LIVE LOAD PER SQUARE FOOT.

OPTIONS ARE FOR CONTRACTOR'S CONVENIENCE. IF AN OPTION IS CHOSEN, CONTRACTOR SHALL BE RESPONSIBLE FOR ALL NECESSARY CHANGES, APPROVALS AND THE COORDINATION OF THE WORK WITH ALL RELATED TRADES AND SUPPLIERS.

SPECIAL INSPECTION – STRUCTURAL ONLY:

FOR SPECIAL STRUCTURAL INSPECTIONS:
CONTACT CARUSO TURLEY SCOTT, INC. AT 480-774-1700 PRIOR TO CONSTRUCTION:

SPECIAL INSPECTION IS TO BE PROVIDED FOR THE ITEMS LISTED BELOW IN ADDITION TO THE INSPECTIONS CONDUCTED BY THE BUILDING JURISDICTION. "SPECIAL STRUCTURAL INSPECTION" SHALL NOT RELIEVE THE OWNER OR THEIR AGENT FROM REQUESTING THE BUILDING JURISDICTION INSPECTIONS REQUIRED BY SECTION 109 OF THE INTERNATIONAL BUILDING CODE. SPECIAL INSPECTION IS REQUIRED PER CHAPTER 17 FOR THE FOLLOWING:

CONCRETE CONSTRUCTION:

1. CONCRETE:
A. DURING THE TAKING OF TEST SPECIMENS.
B. CONTINUOUS INSPECTION DURING THE PLACEMENT OF ALL REINFORCED CONCRETE, UNLESS NOTED OTHERWISE.
C. CONTINUOUS INSPECTION OF BOLTS TO BE INSTALLED IN CONCRETE PRIOR TO AND DURING THE PLACEMENT OF CONCRETE AROUND BOLTS.
(EXCEPTION: NO INSPECTION IS REQUIRED FOR PLACEMENT OF CONCRETE AROUND FOUNDATION ANCHOR BOLTS.)
D. NO INSPECTION IS REQUIRED FOR PLACEMENT OF SLAB ON GRADE CONCRETE. INSPECTION OF SLAB ON GRADE REINFORCING IS REQUIRED PER "REINFORCING STEEL" SECTION BELOW.
E. INSPECTION OF FOUNDATION REINFORCING IS REQUIRED PER "REINFORCING STEEL" SECTION BELOW.

2. REINFORCING STEEL: INSPECTION OF IN-PLACE REINFORCING FOR CONFORMANCE PRIOR TO THE CLOSING OF FORMS OR THE DELIVERY OF CONCRETE TO THE JOBSITE FOR THE FOLLOWING:
A. REINFORCING FOR ALL CONCRETE REQUIRED TO HAVE INSPECTION NOTED ABOVE.
B. REINFORCING FOR CONCRETE FOUNDATIONS.
C. REINFORCING FOR SLABS ON GRADE.
D. REINFORCING FOR ALL MASONRY REQUIRED TO HAVE INSPECTION NOTED BELOW.

3. POST-TENSIONED TENDONS IN CONCRETE:
A. INSPECTION OF IN-PLACE TENDONS FOR CONFORMANCE PRIOR TO THE CLOSING OF FORMS OR THE DELIVERY OF CONCRETE TO THE JOBSITE.
B. CONTINUOUS INSPECTION DURING THE PLACEMENT OF ALL REINFORCED CONCRETE, UNLESS NOTED OTHERWISE.
C. CONTINUOUS INSPECTION DURING THE STRESSING OF TENDONS.
D. INSPECTION OF TENDON ELONGATIONS PRIOR TO REMOVAL OF EXCESS TENDON ENDS.

4. SHOTCRETE:
A. CONTINUOUS INSPECTION DURING PLACEMENT OF SHOTCRETE TEST PANELS.
B. CONTINUOUS INSPECTION DURING PLACEMENT OF SHOTCRETE PANELS.
C. INSPECTION OF IN-PLACE REINFORCING PRIOR TO SHOTCRETE PLACEMENT.

STEEL CONSTRUCTION:

1. WELDING:
A. PERIODIC VISUAL INSPECTION OF ALL FIELD WELDS.
B. CONTINUOUS INSPECTION OF ALL MULTIPASS FILLET WELDS OR SINGLE PASS FILLET WELDS LARGER THAN 5/16".
C. NON-DESTRUCTIVE TESTING OF ALL COMPLETE PENETRATION WELDS BY AN AWS CERTIFIED INDEPENDENT TESTING LABORATORY AT THE CONTRACTORS EXPENSE.
D. VERIFICATION OF VALID WELDER'S CERTIFICATES.
E. ALL STRUCTURAL STEEL FABRICATORS SHALL EMPLOY AN AWS CERTIFIED INDEPENDENT TESTING LAB TO PROVIDE SHOP WELD INSPECTIONS PER CODE. INSPECTION REPORTS SHALL BE SUBMITTED TO ENGINEER OF RECORD PRIOR TO STEEL INSTALLATION. EXCEPTION: NO SHOP INSPECTION IS REQUIRED IF THE FABRICATOR IS ON THE CITY OF PHOENIX APPROVED STEEL FABRICATOR LIST.

2. HIGH STRENGTH BOLTING:
A. VERIFICATION OF SNUG TIGHT BOLT INSTALLATION FOR ASTM A325N BOLTS.
B. VERIFICATION OF PROPER BOLT INSTALLATION AND PRETENSIONING FOR ASTM A325SC BOLTS.
C. OBSERVATION OF PREINSTALLATION TESTING AND PRETENSIONING CALIBRATION PROCEDURES FOR ASTM A325SC BOLTS.

MASONRY CONSTRUCTION:

1. STRUCTURAL MASONRY:
A. DURING PREPARATION OF PRISMS.
B. INSPECTION OF IN-PLACE REINFORCING FOR CONFORMANCE PRIOR TO THE DELIVERY OF GROUT TO THE JOBSITE.
C. CONTINUOUS INSPECTION DURING PLACEMENT OF GROUT.
D. CLEANOUTS PRIOR TO CLOSING.

SPECIAL CASES:

1. EXPANSION, EPOXY, ADHESIVE, AND SCREW ANCHORS: DURING THE PLACEMENT OF ALL ANCHORS SHOWN ON STRUCTURAL DRAWINGS. ADDITIONAL INSPECTIONS REQUIRED FOR REPAIR DETAILS SHALL BE PERFORMED AT THE CONTRACTOR'S EXPENSE.
A. INSPECTION OF HOLE DIAMETER, HOLE DEPTH AND DRILL BIT CONFORMANCE.
B. INSPECTION OF HOLE CLEANING WITH WIRE BRUSH AND COMPRESSED AIR.
C. INSPECTION OF ANCHOR INSTALLATION USING SPECIFIED PRODUCT AND MANUFACTURER'S RECOMMENDED INSTALLATION PROCEDURES.

SPECIAL INSPECTION – NON STRUCTURAL:

1. SOILS (BY OTHERS) – SPECIAL GRADING, EXCAVATION, FILLING, AND IN-PLACE DENSITY INSPECTIONS TO BE PERFORMED BY THE GEOTECHNICAL ENGINEER OF RECORD.
2. ADHERED VENEER (BY OTHERS) – SPECIAL INSPECTIONS SHALL BE PROVIDED FOR THE INSTALLATION OF ALL EXTERIOR ADHERED VENEER LOCATED MORE THAN 8 FEET ABOVE ANY ADJACENT GRADE, ROOF, WALKWAY OR SIMILAR SURFACE BY ARCHITECT OF RECORD.

DUTIES AND RESPONSIBILITIES OF THE SPECIAL INSPECTOR:

A. THE SPECIAL INSPECTOR SHALL OBSERVE THE WORK ASSIGNED TO BE CERTAIN IT CONFORMS TO THE APPROVED DESIGN DRAWINGS AND SPECIFICATION.
B. THE SPECIAL INSPECTOR IS NOT AUTHORIZED TO APPROVE DEVIATIONS FROM THE DESIGN DRAWINGS OR SPECIFICATIONS, AND ALL DEVIATIONS MUST BE APPROVED BY THE STRUCTURAL ENGINEER OF RECORD PRIOR TO PROCEEDING WITH THE WORK. ALL REQUESTS FOR DEVIATIONS SHALL BE INITIATED BY THE CONTRACTOR VIA WRITTEN REQUEST FOR INFORMATION (RFI).
C. THE SPECIAL INSPECTOR SHALL FURNISH INSPECTION REPORTS TO THE BUILDING OFFICIAL, AND TO THE ENGINEER OR ARCHITECT OF RECORD. ALL DISCREPANCIES SHALL BE BROUGHT TO THE IMMEDIATE ATTENTION OF THE CONTRACTOR FOR CORRECTION, THEN, IF UNCORRECTED, TO THE DESIGN AUTHORITY AND THE BUILDING OFFICIAL.
D. CONTRACTOR SHALL PROVIDE THE SPECIAL INSPECTOR ACCESS TO ALL ITEMS REQUIRING SPECIAL INSPECTION. ACCESS SHALL BE PROVIDED BY IN-PLACE LADDERS, SCAFFOLDS, LIFTS AND/OR OTHER EQUIPMENT OPERATED BY THE CONTRACTOR'S PERSONNEL AS REQUIRED FOR SAFE OBSERVATION. INSPECTOR IS NOT RESPONSIBLE OR AUTHORIZED TO OPERATE CONTRACTOR'S EQUIPMENT.
E. UPON COMPLETION OF THE ASSIGNED WORK THE ENGINEER OR ARCHITECT SHALL COMPLETE AND SIGN THE APPROPRIATE FORMS CERTIFYING THAT TO THE BEST OF THEIR KNOWLEDGE THE WORK IS IN CONFORMANCE WITH THE APPROVED PLANS AND SPECIFICATIONS, AND THE APPLICABLE WORKMANSHIP PROVISIONS OF THE CODE.

STRUCTURAL OBSERVATION (IBC):

STRUCTURAL OBSERVATION IS TO BE PROVIDED PER SECTION 1709 OF THE INTERNATIONAL BUILDING CODE IN ADDITION TO THE ITEMS LISTED UNDER "SPECIAL INSPECTION: STRUCTURAL".

GENERAL:

STRUCTURAL OBSERVATION INCLUDES, BUT IS NOT LIMITED TO, THE VISUAL OBSERVATION OF THE STRUCTURAL SYSTEM, FOR GENERAL CONFORMANCE TO THE APPROVED PLANS AND SPECIFICATIONS, AT SIGNIFICANT CONSTRUCTION STAGES AND AT COMPLETION OF THE STRUCTURAL SYSTEM, AND SUBMISSION OF APPROPRIATE OBSERVATION REPORTS TO THE BUILDING OFFICIAL.

THE OWNER SHALL EMPLOY A REGISTERED STRUCTURAL DESIGN PROFESSIONAL TO PERFORM THE STRUCTURAL OBSERVATION. OBSERVED DEFICIENCIES SHALL BE REPORTED IN WRITING TO THE OWNER'S REPRESENTATIVE, SPECIAL INSPECTOR, CONTRACTOR AND THE BUILDING OFFICIAL. THE STRUCTURAL OBSERVER SHALL SUBMIT TO THE BUILDING OFFICIAL A WRITTEN STATEMENT THAT THE SITE VISITS HAVE BEEN MADE AND IDENTIFYING ANY REPORTED DEFICIENCIES WHICH, TO THE BEST OF THE STRUCTURAL OBSERVER'S KNOWLEDGE, HAVE NOT BEEN RESOLVED.

ABBREVIATIONS

NOTE: ABBREVIATIONS MAY OR MAY NOT HAVE PERIODS, BUT SHALL BE READ AS SAME.

A.B.	ANCHOR BOLT
A.B.C.	AGGREGATE BASE COURSE
ACI	AMERICAN CONCRETE INSTITUTE
A/C	AIR CONDITIONER
A.F.F.	ABOVE FINISHED FLOOR
AISC	AMERICAN INSTITUTE OF STEEL CONSTRUCTION
AISI	AMERICAN IRON AND STEEL INSTITUTE
AITC	AMERICAN INSTITUTE OF TIMBER CONSTRUCTION
ALT.	ALTERNATE
ANSI	AMERICAN NATIONAL STANDARDS INSTITUTE
APA	AMERICAN PLYWOOD ASSOCIATION
ARCH'L	ARCHITECTURAL
ASTM	AMERICAN SOCIETY FOR TESTING AND MATERIALS
AWS	AMERICAN WELDING SOCIETY
A.W.T.S.	AUTOMATIC WELDED THREADED STUDS
BM	BEAM
B.F.F	BELOW FINISHED FLOOR
BLK	BLOCK
B.O.B.	BOTTOM OF BEAM
B.O.D.	BOTTOM OF DECK
B.O.F.	BOTTOM OF FOOTING
BRG	BEARING
C	CAMBER
C.C.	CENTERLINE TO CENTERLINE
CFS	COLD FORMED STEEL
C.G.	CENTER OF GRAVITY
C.I.P.	CAST IN PLACE
C.L.	CENTERLINE
C.L.B.	CENTERLINE OF BEAM
C.L.C.	CENTERLINE OF COLUMN
C.L.F.	CENTERLINE OF FOOTING
C.L.W.	CENTERLINE OF WALL
CLR	CLEAR
CONC	CONCRETE
CONC C.J.	CONCRETE CONTROL JOINT
CONC S.J.	CONCRETE SAWCUT JOINT
C.M.U.	CONCRETE MASONRY UNIT
CONN	CONNECTION
CONT	CONTINUOUS
CRSI	CONCRETE REINFORCING STEEL INSTITUTE
D.F. (D.F.L.)	DOUGLAS FIR LARCH
DL	DEAD LOAD
DIA	DIAMETER
DN	DOWN
DWG(S)	DRAWING(S)
E.C.	END TO CENTERLINE
E.E.	END TO END
E.O.S.	EDGE OF SLAB
EQ	EQUAL
EQUIP	EQUIPMENT
EXP. BOLT (E.B.)	EXPANSION BOLT
EXP. JT (E.J.)	EXPANSION JOINT
E.W.	EACH WAY
F.F.	FINISHED FLOOR
F.O.M.	FACE OF MEMBER
F.O.S.	FACE OF STEEL
F.O.W.	FACE OF WALL
GA	GAGE (UNIT OF MEASUREMENT)
GALV	GALVANIZED
G.S.N.	GENERAL STRUCTURAL NOTES
GLB (GLULAM)	GLUED-LAMINATED BEAM
H.F.	HEM FIR
HORIZ	HORIZONTAL REINFORCING
H.S.	HEADED STUDS
IBC	INTERNATIONAL BUILDING CODE
ICBO	INTERNATIONAL CONFERENCE OF BUILDING OFFICIALS
ICC	INTERNATIONAL CODE COUNCIL
ICF	INSULATED CONCRETE FORMS
I.F.W.	INSIDE FACE OF WALL
I.O.D.	INTERPRETATION OF DRAWINGS
JST	JOIST
K(KIP)	1000 POUNDS
KLF	KIPS PER LINEAR FOOT
LBS (#)	POUNDS
LGR	LEDGER
LGS	LIGHT GAGE STEEL
LGSEA	LIGHT GAGE STEEL ENGINEERS ASSOCIATION
L.O.D.	LOCATION OF DETAILS
LL	LIVE LOAD
LLH	LONG LEG HORIZONTAL
LLV	LONG LEG VERTICAL
MAS	MASONRY
MAS C.J.	MASONRY CONTROL JOINT
MAX	MAXIMUM
MBMA	METAL BUILDING MANUFACTURERS ASSOCIATION
MECH'L	MECHANICAL
MFR'D	MANUFACTURERED
MFR('S)	MANUFACTURER('S)
MIN	MINIMUM
N/A	NOT APPLICABLE
N.T.S.	NOT TO SCALE
O.C.	ON CENTER
O.F.W.	OUTSIDE FACE OF WALL
OPP	OPPOSITE
OSHA	OCCUPATIONAL SAFETY AND HEALTH ADMINISTRATION
PCI	PRECAST/PRESTRESSED CONCRETE INSTITUTE
P.C.	PRECAST CONCRETE
PCF	POUNDS PER CUBIC FOOT
PLF	POUNDS PER LINEAR FOOT
±	PLUS OR MINUS
PREFAB	PREFABRICATED
PSF	POUNDS PER SQUARE FOOT
PSI	POUNDS PER SQUARE INCH
PT	POST-TENSIONED
PTI	POST-TENSIONING INSTITUTE
REINF	REINFORCING
SDI	STEEL DECK INSTITUTE
SLH	SHORT LEG HORIZONTAL
SLV	SHORT LEG VERTICAL
SJI	STEEL JOIST INSTITUTE
SIM	SIMILAR
SQ.	SQUARE
SSMA	STEEL STUD MANUFACTURERS ASSOCIATION
STD	STANDARD
STL	STEEL
TL	TOTAL LOAD
T.O.B.	TOP OF BEAM
T.O.C.T.	TOP OF CONCRETE TOPPING
T.O.D.	TOP OF DECK
T.O.F.	TOP OF FOOTING
T.O.L.	TOP OF LEDGER
T.O.M.	TOP OF MASONRY
T.O.P.	TOP OF PLATE
T.O.P.C.	TOP OF PRECAST CONCRETE
T.O.S.	TOP OF STEEL
T.O.W.	TOP OF WALL
TPI	TRUSS PLATE INSTITUTE
TYP	TYPICAL
T&G	TONGUE AND GROOVE
UBC	UNIFORM BUILDING CODE
U.N.O.	UNLESS NOTED OTHERWISE
VERT	VERTICAL REINFORCING
WCLA	WEST COAST LUMBER ASSOCIATION
WCLIB	WEST COAST LUMBER INSPECTION BUREAU
W.W.F.	WELDED WIRE FABRIC
WWPA	WESTERN WOOD PRODUCTS ASSOCIATION
W/	WITH
W/C	WATER TO CEMENT RATIO
W/O	WITHOUT

LOCATION OF DETAILS

DETAILS	SHEET	DESCRIPTION
S0.1 & S0.2		GENERAL STRUCTURAL NOTES
01-19	S0.3	TYPICAL DETAILS
101-119	S2.1	FOUNDATION DETAILS
121-139	S2.2	FOUNDATION DETAILS
201-219	S3.1	FLOOR FRAMING DETAILS
221-239	S3.2	FLOOR FRAMING DETAILS
301-319	S4.1	ROOF FRAMING DETAILS
321-339	S4.2	ROOF FRAMING DETAILS
S510, S520, S530		STAIR PLANS
S511, S521, S531		STAIR SECTIONS
401-419	S5.4	STAIR DETAILS
421-439	S5.5	STAIR DETAILS

FINAL FOR CONSTRUCTION - 05/18/15

THESE DRAWINGS/CALCULATIONS ARE CONSIDERED PRELIMINARY -NOT FOR CONSTRUCTION OR RECORDING UNLESS THE STRUCTURAL ENGINEER OF RECORD'S SEAL IS AFFIXED WITH WRITTEN SIGNATURE.

AWBREY
COOK
MCGILL
architects
1045 14th Street, Suite 100
San Diego, CA 92101-5701
Phone: 619 . 398 . 3480

ARCHITECTS:
THOMAS B. AWBREY C 17578
CLIFFORD W. COOK C 19705
SCOT W. McGILL C 21059

42194
BRADY K. NOTBOHM
2/20/15
EXPIRES 03-31-17

Copyright © 2014
AWBREY COOK MCGILL ARCHITECTS
All ideas, designs, and arrangements indicated on these drawings are the property of AWBREY COOK MCGILL ARCHITECTS and are intended to be used in connection with this specific project only and shall not otherwise be used for any purpose whatsoever without the written consent of the architects. There shall be no changes or deviations from these drawings or the accompanying specifications without the written consent of the architects.

CONSULTANTS:

CARUSO TURLEY SCOTT INC.
consulting structural engineers
1215 W. Rio Salado Pkwy
Suite 200
Tempe, Arizona 85281
(480) 774-1700
(480) 774-1701 FAX
www.ctsaz.com

ENGINEER: TRM/BKN – JOB NUMBER: 13-112

REVISIONS:

△A	ADDENDUM A	02/02/15
△1	INSTRUCTION BULLETIN 1	02/23/15

PROJECT:

MARRIOTT RESIDENCE INN
- COURTYARD @ LUHRS
A Development of - LUHRS CM, LLC
Phoenix, Arizona

DRAWN: SMV
CHECKED: BKN/TRM
DATE: 12/16/13
PROJECT NO.: 12-1601

SHEET TITLE:
GENERAL STRUCTURAL NOTES (CONTINUED)

SHEET NO.:
S0.2

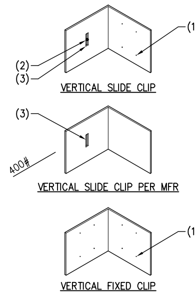

NOTES:

1. 4 #10 S.M. SCREWS.
2. 1/4" DIA THRU BOLT.
3. 1 1/2" LONG SLOTTED HOLE.

NOTE:
ALL CLIPS SHALL BE 14 GA MIN X 3"x3"x0'-3" LONG MIN.

25 TYPICAL STEEL STUD CLIP

407-25 NO SCALE

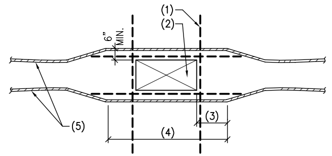

NOTES:

1. OPENING REINFORCING – SEE DETAIL 17 OR PLAN.
2. OPENING.
3. 12" MINIMUM – TYPICAL.
4. TENDONS SHALL BE STRAIGHT IN THIS AREA.
5. POST-TENSIONING.

20 POST-TENSIONING AT OPENING

246-11M NO SCALE

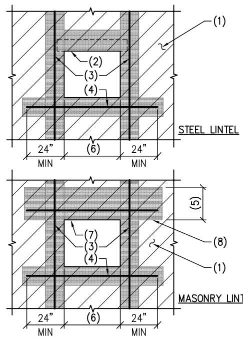

NOTES:

1. MASONRY WALL.
2. STEEL LINTEL PER PLAN OR G.S.N. – GROUT SOLID.
3. JAMB REINFORCING PER G.S.N. OR DETAILS CUT ON PLAN.
4. 2 #5 IN 8" DEEP SOLID GROUTED BOND BEAM – BEND BARS UP AT WALL CORNERS.
5. MASONRY LINTEL – SEE PLAN OR DETAILS FOR ADDITIONAL INFORMATION.
6. OPENING WIDTH.
7. LINTEL BLOCK AT OPENING.
8. OPEN ENDED BLOCK FULL DEPTH OF LINTEL. EXTEND 24" EACH SIDE.

15 TYPICAL OPENING IN MASONRY WALL WITH STEEL OR MASONRY LINTEL

505-76 NO SCALE

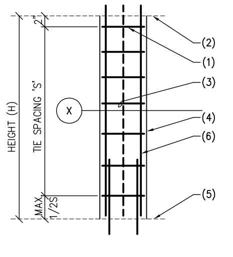

NOTES:

1. LIGHTNING PROTECTION WHERE INDICATED ON ELECTRICAL DWGS. CENTER IN COLUMN.
2. BOTTOM OF STRUCTURE OR TOP OF COLUMN.
3. TIES – FOR SIZE AND SPACING SEE PLAN AND SCHEDULE. ROTATE TIE SETS 90 DEGREES EACH COURSE.
4. CONCRETE COLUMN.
5. TOP OF FOUNDATION OR STRUCTURE.
6. VERTICAL REINFORCING.

NOTE:
FOR TIE ARRANGEMENT, SEE COLUMN SCHEDULE.

10 TYPICAL TIE SPACING FOR CONCRETE COLUMN

372-02.21M NO SCALE

REBAR SIZE (METRIC)	REBAR GRADE	MASONRY LAP SPLICE LENGTH				
		STEEL AT CENTER OF WALL			STEEL AT FACE OF WALL (& BOND BEAMS)	
		6" BLK	8" BLK	12" BLK	8" BLK	12" BLK
#4 (13)	40	20"	20"	20"	20"	20"
#4 (13)	60	20"	20"	20"	20"	20"
#5 (16)	60	25"	25"	25"	25"	25"
#6 (19)	60	N/A	30"	30"	30"	30"
#7 (22)	60	N/A	35"	35"	N/A	35"
#8 (25)	60	N/A	N/A	40"	N/A	40"

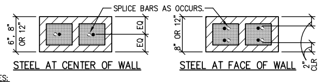

NOTES:

1. LAPS APPLY TO BOTH VERTICAL AND HORIZONTAL REINFORCING.
2. PROVIDE BENT BARS TO MATCH HORIZONTAL BOND BEAM REINFORCING, AT CORNERS AND WALL INTERSECTION TO MAINTAIN BOND BEAM CONTINUITY.
3. DO NOT SPLICE HORIZONTAL BARS WITHIN 8'-0" OF CONTROL JOINTS.
4. FOR LADDER TYPE HORIZONTAL REINFORCING, SEE G.S.N.
5. LAP LENGTHS ARE BASED ON A CALCULATED STEEL STRESS (fs) NOT EXCEEDING 80 PERCENT OF THE ALLOWABLE STEEL STRESS (Fs).

05 WORKING STRESS MASONRY LAP SPLICES FOR REINFORCING STEEL – 2006/2009 IBC

501-102 NO SCALE

	CLASS B TENSION SPLICE LENGTHS										COMP. BARS
CONC PSI	f'c=2,500/3,000 PSI		f'c = 4,000 PSI		f'c = 5,000 PSI		f'c = 6000 PSI		f'c = 7,000 PSI		f'c = ≧ 3,000
BAR LOCATION / SIZE (METRIC)	REGULAR	TOP	REGULAR	TOP	REGULAR	TOP	REGULAR	TOP	REGULAR	TOP	STD LAP
#3 (10)	30"	38"	24"	31"	21"	27"	19"	25"	18"	23"	17"
#4 (13)	39"	51"	31"	41"	28"	36"	26"	33"	24"	31"	22"
#5 (16)	49"	64"	39"	51"	35"	45"	32"	41"	30"	38"	28"
#6 (19)	59"	77"	47"	61"	42"	54"	38"	50"	35"	46"	33"
#7 (22)	86"	111"	68"	88"	61"	79"	56"	72"	51"	67"	39"
#8 (25)	98"	127"	78"	101"	69"	90"	63"	82"	59"	76"	44"
#9 (29)	110"	143"	87"	113"	78"	102"	71"	93"	66"	86"	50"
#10 (32)	124"	161"	98"	128"	88"	114"	80"	104"	74"	97"	56"
#11 (36)	138"	179"	109"	142"	98"	127"	89"	116"	83"	107"	62"

NOTES:

1. TOP BARS ARE ANY HORIZONTAL BARS PLACED SO THAT MORE THAN 12" OF FRESH CONCRETE IS CAST IN THE MEMBER BELOW THE REINFORCEMENT.
2. LAP SPLICES SHALL BE CLASS "B" TENSION LAP SPLICES PER LATEST EDITION OF ACI 318 UNLESS SPECIFICALLY NOTED OTHERWISE ON THE DRAWINGS OR SCHEDULES.
3. CONTACT STRUCTURAL ENGINEER IF CLEAR SPACING OF REINFORCEMENT IS LESS THAN OR EQUAL TO 2 BAR DIAMETERS (≦2db), OR IF CLEAR COVER IS LESS THAN THE BAR DIAMETER (db).
4. THIS TABLE IS BASED ON NORMAL WEIGHT CONCRETE.
5. FOR ADDITIONAL INFORMATION, SEE G.S.N., PLANS, SCHEDULES AND DETAILS.
6. SEE DETAIL 02 FOR VERTICAL COLUMN AND WALL SPLICES.

01 LAP SCHEDULE FOR REINFORCING STEEL IN CONCRETE (GRADE 75)

13-112 NO SCALE

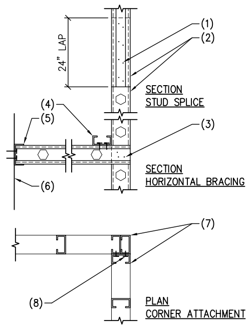

NOTES:

1. 8 #10 S.M. SCREWS.
2. STEEL STUDS.
3. CONNECTION PER TYPICAL DETAIL.
4. STUD BRACE WITH 2 #10 TEKS AT EACH STUD FULL LENGTH OF WALL.
5. STUD TRACK WITH 2 #10 S.M AT EACH STUD AT STUD WALLS, AND/OR 1 RAWL MUSH HEAD SPIKES 1/4" DIA x 2 1/2" AT 24" O.C. AT MASONRY WALLS. NOTE: THIS CONNECTION TYPICAL AT ALL FLOOR LINES AND AT ROOF PLATE LINE.
6. FACE OF BUILDING WALL.
7. INTERSECTING STEEL STUD WALLS.
8. #10 S.M. STUD TO STUD AT 48" O.C. VERTICALLY.

NOTE:

A. STUD SPLICE MAY ONLY OCCUR BELOW TOP FLOOR OF BUILDING.
B. 3 5/8" STEEL STUDS AND TRACKS MAY BE USED AT BRACING AT CONTRACTOR'S OPTION.
C. S.M. (SHEET METAL) SCREWS PER G.S.N.

26 TYPICAL "POPOUT" STUD WALL BRACE AND CORNER

407-61 NO SCALE

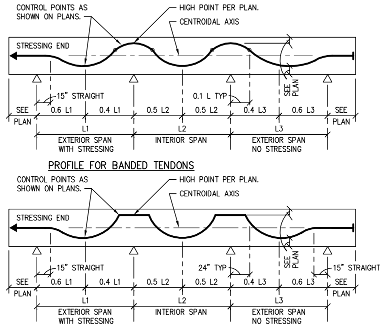

21 TYPICAL PROFILES FOR POST-TENSIONED TENDONS

13-112 NO SCALE

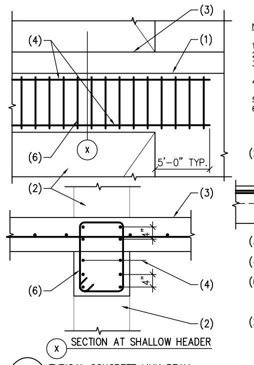

NOTES:

1. CONCRETE LINK BEAM.
2. OPENING PER PLAN.
3. POST-TENSIONED CONCRETE FLOOR SLAB.
4. HORIZONTAL WALL REINFORCING PER ELEVATIONS.
5. #4 X 48" X 48" AT 12" O.C.
6. #5 STIRRUP TIES AT 4" O.C.

16 TYPICAL CONCRETE LINK BEAM

13-112 NO SCALE

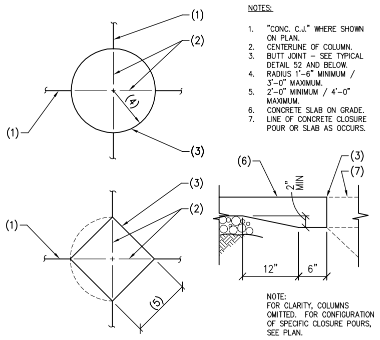

NOTES:

1. "CONC. C.J." WHERE SHOWN ON PLAN.
2. CENTERLINE OF COLUMN.
3. BUTT JOINT – SEE TYPICAL DETAIL 52 AND BELOW.
4. RADIUS 1'-6" MINIMUM / 3'-0" MAXIMUM.
5. 2'-0" MINIMUM / 4'-0" MAXIMUM.
6. CONCRETE SLAB ON GRADE.
7. LINE OF CONCRETE CLOSURE POUR OR SLAB AS OCCURS.

NOTE:
FOR CLARITY, COLUMNS OMITTED. FOR CONFIGURATION OF SPECIFIC CLOSURE POURS, SEE PLAN.

11 (H) TYPICAL COLUMN CLOSURE POUR AT CONCRETE SLAB ON GRADE

101-24.52 NO SCALE

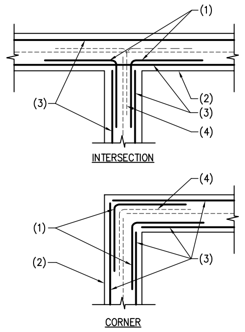

NOTES:

1. CORNER BARS SAME SIZE AND SPACING AS HORIZONTAL REINFORCING. LAP PER G.S.N. (24" MINIMUM).
2. CONCRETE STEM WALL OR FOOTING.
3. REINFORCING PER PLANS AND/OR DETAILS.
4. CORNER BARS AT SINGLE MAT REINFORCING. ALTERNATE BENDS AT INTERSECTION.

06 PLAN – CORNER REINFORCING IN CONCRETE WALL

105-07 NO SCALE

	CLASS B TENSION SPLICE LENGTHS								COMP. BARS
CONC PSI	f'c=5,000 PSI		f'c = 6,000 PSI		f'c = 7,000 PSI		f'c = 8,000 PSI		f'c = ≧ 3,000
BAR LOCATION / SIZE (METRIC)	COLUMN	SHEAR WALL	COLUMN	SHEAR WALL	COLUMN	SHEAR WALL	COLUMN	SHEAR WALL	STD LAP
#3 (10)	13"	13"	12"	12"	11"	11"	10"	10"	17"
#4 (13)	17"	17"	16"	16"	14"	14"	14"	14"	22"
#5 (16)	21"	21"	19"	19"	18"	18"	17"	17"	28"
#6 (19)	25"	25"	23"	23"	21"	21"	20"	20"	33"
#7 (22)	37"	41"	33"	38"	31"	35"	29"	33"	39"
#8 (25)	42"	52"	38"	48"	35"	44"	33"	41"	44"
#9 (29)	52"	64"	47"	59"	44"	54"	41"	51"	50"
#10 (32)	64	79"	58"	72"	54"	66"	50"	62"	56"
#11 (36)	76"	94"	70"	86"	65"	79"	61"	74"	62"
BUNDLED #11 (X2)	97"	---	89"	---	82"	---	77"	---	62"

NOTES:

1. LAPS FOR HORIZONTAL WALL REINFORCING, COLUMN TIES, ELEVATED SLABS, SLABS ON GRADE AND ALL WALL REINFORCING FOR WALLS OF f'c < 5,000 PSI SHALL BE PER DETAIL 01.
2. LAP SPLICES SHALL BE CLASS "B" TENSION LAP SPLICES PER LATEST EDITION OF ACI 318 UNLESS SPECIFICALLY NOTED OTHERWISE ON THE DRAWINGS OR SCHEDULES.
3. CONTACT STRUCTURAL ENGINEER IF CLEAR SPACING OF REINFORCEMENT IS LESS THAN OR EQUAL TO 2", OR IF CLEAR COVER IS LESS THAN 2" AT COLUMN, 1 1/2" AT WALLS.
4. THIS TABLE IS BASED ON NORMAL WEIGHT CONCRETE.
5. FOR ADDITIONAL INFORMATION, SEE G.S.N., PLANS, SCHEDULES AND DETAILS.
6. BUNDLED BARS SHALL BE SPLICED INDIVIDUALLY – STAGGER SPLICES ONE FULL LAP LENGTH.

02 LAP SCHEDULE FOR VERTICAL REINFORCING STEEL IN CONCRETE COLUMNS & SHEAR WALLS (ONLY) (GRADE 75)

13-112 NO SCALE

TYPICAL STEEL STUD CEILING JOIST SCHEDULE

NOTES:

1. CEILING JOISTS AT 24" O.C. MAXIMUM.
2. CONTINUOUS BRIDGING TOP AND BOTTOM OF JOIST WITH 1 #10 S.M. SCREW PER JOIST SHALL BE PROVIDED AT INTERVALS NOT TO EXCEED "S" (SPACING). BRIDGING MAY BE OMITTED ON SIDES WITH CONTINUOUS SHEATHING.
3. IF JOIST SPANS ARE ENCOUNTERED IN EXCESS OF THOSE TABULATED BELOW, NOTIFY THE STRUCTURAL ENGINEER.
4. JOISTS DESIGNED FOR 5 PSF DEAD LOAD AND 10 PSF LIVE LOAD. IF LOADS ENCOUNTERED ARE GREATER, NOTIFY THE STRUCTURAL ENGINEER.
5. FOR GENERAL NOTES REGARDING LEDGERS, SEE LEDGER SCHEDULE.
6. S.M. (SHEET METAL) SCREWS PER G.S.N.
7. FOR ADDITIONAL INFORMATION, SEE TYPICAL STEEL STUD DETAILS, G.S.N. AND ARCHITECTURAL DRAWINGS.

JOIST SIZE	MAXIMUM SPAN	MAXIMUM SPACING "S"	STEEL TRACK AT MASONRY WALL	STEEL TRACK AT STUD WALL
362S137-33	8'-0"	4'-0"	350T125-43 WITH 3/4" DIA ANCHOR BOLTS AT 32" O.C.	350T125-43 WITH 2-#10 S.M. SCREWS PER STUD
600S137-33	10'-0"	5'-0"	600T125-43 WITH 3/4" DIA ANCHOR BOLTS AT 32" O.C.	600T125-43 WITH 2-#10 S.M. SCREWS PER STUD
800S137-43	16'-0"	6'-0"	800T125-54 WITH 3/4" DIA ANCHOR BOLTS AT 32" O.C.	800T125-54 WITH 3-#10 S.M. SCREWS PER STUD

27 TYPICAL STEEL STUD CEILING JOIST SCHEDULE

407-91 NO SCALE

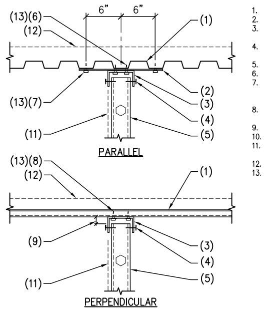

NOTES:

1. STEEL DECK WHERE OCCURS.
2. 18 GA x14"x6" PLATE AT 48" O.C.
3. CONT. DEEP LEG 16 GA SLIP TRACK BY STUD MANUFACTURER.
4. #10 SCREW CENTER IN SLOTTED HOLE.
5. STEEL STUD WALL.
6. 2 #10 S.M. SCREWS EACH PLATE.
7. 3 #10 S.M. SCREWS AT RIBS. OMIT CENTER SCREW WHERE TRACK OCCURS AT FLUTE.
8. #10 S.M. SCREWS AT 12" O.C. – STAGGER SIDES.
9. 1" CLEAR MIN – TYP.
10. NOT USED.
11. WALL COVERING WHERE OCCURS – DO NOT ATTACH TO SLIP TRACK.
12. CONCRETE SLAB WHERE OCCURS.
13. SUBSTITUTE HILTI DN 0.148" DIA POWDER DRIVEN SCREWS AT CONCRETE SLAB

NOTE:
S.M. (SHEET METAL) SCREWS PER G.S.N.

22 TYPICAL NON-BEARING STEEL STUD TOP TRACK CONNECTION

407-81M NO SCALE

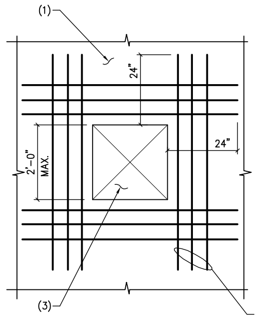

NOTES:

1. CONCRETE SLAB.
2. 3 #5 @ 3" O.C. CENTERED IN SLAB EACH SIDE OF OPENING.
3. OPENING IN CONCRETE SLAB SEE ARCH'L. AND MECH'L.

17 PLAN – TYPICAL OPENING IN CONCRETE SLAB

220-09 NO SCALE

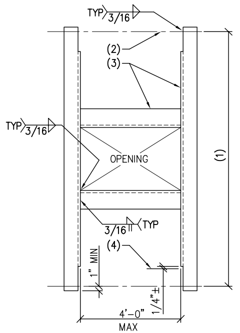

NOTES:

1. SEE PLAN FOR SPACING (8'-0" MAXIMUM).
2. CENTERLINE OF FRAMING MEMBER.
3. ANGLE 4"x4"x1/4".
4. FACE OF FRAMING MEMBER.

NOTE:

A. FOR CLARITY, ROOF DECK OMITTED.
B. VERIFY OPENING SIZE WITH APPROPRIATE TRADE.

12 PLAN – TYPICAL OPENING IN FRAMING

401-55.01 NO SCALE

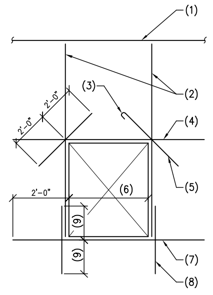

NOTES:

1. FLOOR OR ROOF LINE.
2. 2 #5 VERTS WHERE OPENING 36" WIDE OR LESS. 4 #5 VERTS WHERE OPENING GREATER THAT 36" WIDE.
3. WHERE 2'-0" CANNOT BE OBTAINED, EXTEND BAR AS FAR AS POSSIBLE AND HOOK OR BEND.
4. 2 #5 FOR OPENINGS 4'-0" WIDE OR LESS. 2 #6 FOR OPENINGS WIDER THAN 4'-0".
5. 2 #5 TYPICAL CORNER DIAGONAL BARS.
6. WHERE WIDTH OF OPENING EXCEEDS 2 TIMES WALL THICKNESS, JAMB BARS SHALL EXTEND FULL HEIGHT OF WALL.
7. 2 #5 UNLESS LARGER BARS ARE SHOWN ON PLANS PR DETAILS.
8. DOWELS SAME SIZE AS JAMB BARS.
9. EMBED AND LAP PER G.S.N.

07 TYPICAL OPENING IN CONCRETE WALL

294-01 NO SCALE

BOLT DIAMETER	VERT BOLT EMBEDMENT LENGTH	HORIZ BOLT EMBEDMENT LENGTH	ANCHOR FILLET WELD SIZE, "S".
1/2"	6"	4"	1/4"
5/8"	6"	4"	5/16"
3/4"	7"	5"	5/16"
7/8"	8"	6"	5/16"
1"	9"	7"	3/8"
1 1/8"	10"	8"	-----
1 1/4"	11"	9"	-----

NOTES:

1. PROVIDE ANCHORS, ANCHOR BOLTS AND EXPANSION BOLTS PER THIS SCHEDULE UNLESS NOTED ON PLANS OR DETAILS.
2. EXPANSION BOLTS IN CONCRETE ONLY AND EPOXY OR ADHESIVE BOLTS IN CONCRETE OR MASONRY SHALL HAVE I.C.C. APPROVAL. SPECIAL INSPECTION PER G.S.N.
3. AUTOMATIC WELDED TO DEVELOP FULL CAPACITY OF HIGH STRENGTH HEADED STUDS.
4. THICKNESS OF DRYPACK DOES NOT APPLY TOWARDS EMBEDMENT.
5. BOLT/PLATE EDGE CLEARANCES PER THE FOLLOWING – TYP U.N.O.:
   - 3/4" DIA OR LESS – 1 1/4"
   - 7/8" DIA ------- 1 1/2"
   - 1" DIA --------- 1 3/4"
   - 1 1/8" DIA ------ 2"
   - 1 1/4" DIA ------ 2 1/4"
   - OVER 1 1/4" DIA -- 1.75xDIA

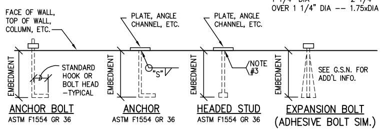
FACE OF WALL, TOP OF WALL, COLUMN, ETC.
EMBEDMENT
STANDARD HOOK OR BOLT HEAD –TYPICAL
PLATE, ANGLE CHANNEL, ETC.
"S"
PLATE, ANGLE CHANNEL, ETC.
NOTE #3
SEE G.S.N. FOR ADD'L INFO.
ANCHOR BOLT
ASTM F1554 GR 36
ANCHOR
ASTM F1554 GR 36
HEADED STUD
ASTM F1554 GR 36
EXPANSION BOLT
(ADHESIVE BOLT SIM.)

03 TYPICAL ANCHOR, ANCHOR BOLT, AND EXPANSION BOLT SCHEDULE AND BOLT/PLATE EDGE CLEARANCES

401-02M NO SCALE

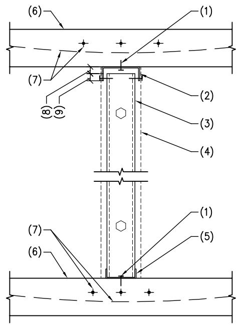

NOTES:

1. HILTI 'X-U' SHOT PINS WITH 3/4" EMBEDMENT SPACED AT 24" O.C.
2. CONTINUOUS 18 GA DEEP LEG SLIP TRACK.
3. STEEL STUD WALL.
4. WALL SHEATHING WHERE OCCURS. DO NOT ATTACH TO SLIP TRACK.
5. CONTINUOUS STEEL TRACK.
6. POST-TENSIONED CONCRETE SLAB.
7. POST-TENSIONED TENDONS PER PLAN.
8. 1" CLR MIN, TYP.
9. 1" MIN, TYP.

△2

28 TYPICAL NON-BEARING STEEL STUD TRACK CONNECTION

13-112 NO SCALE

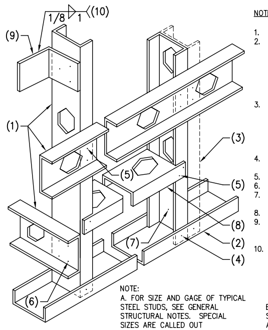

NOTES:

1. STEEL STUD.
2. UNPUNCHED STEEL STUD TRACK – ATTACHMENT REQUIRED 1/2" DIA. EXPANSION BOLTS AT 48" O.C. (2 MINIMUM) OR .148"x3/4" LONG POWDER DRIVEN PINS AT 12" O.C. FASTENER SHALL HAVE ICC REPORT FOR SAME INSTALLATION.
3. MULTIPLE OR INTERSECTING STUDS WHERE OCCUR. CONNECT WITH 2 ROWS #10 S.M. SCREWS AT 24" O.C. STAGGERED SPACING. AT INTERSECTING STUDS 1 ROW OF SCREWS.
4. #10 S.M. SCREWS EACH SIDE, EACH STUD.
5. 2 #10 S.M. SCREWS.
6. 4 #10 S.M. SCREWS.
7. #10 S.M. SCREWS AT 12" O.C. AT DOUBLE STUDS.
8. STUD BLOCKING.
9. 18 GA CLIP ANGLE BY STUD MFR WITH 3 #10 S.M. SCREWS AT EACH STUD WHERE SHOWN IN DETAILS.
10. TYP WELD CLIP TO FRAMING MEMBER OR AS NOTED IN DETAILS.

NOTE:
A. FOR SIZE AND GAGE OF TYPICAL STEEL STUDS, SEE GENERAL STRUCTURAL NOTES. SPECIAL SIZES ARE CALLED OUT ON PLAN AND/OR DETAIL.

B. INSTALL ALL SCREWS PER STEEL STUD MANUFACTURES ASSOC. SPECIFICATIONS.
C. S.M. (SHEET METAL) SCREWS PER G.S.N.

23 TYPICAL STEEL STUD WALL – SCREW CONNECTION

407-22 NO SCALE

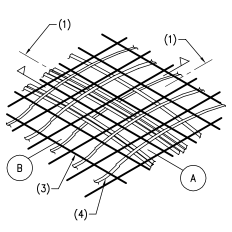

NOTES:

1. COLUMN CENTERLINE.
2. BANDED STRANDS.
3. COLUMN HEAD STEEL AT 6" O.C. EACH WAY.
4. UNIFORM STRANDS.

18 TYPICAL COLUMN HEAD STEEL

250-06 NO SCALE

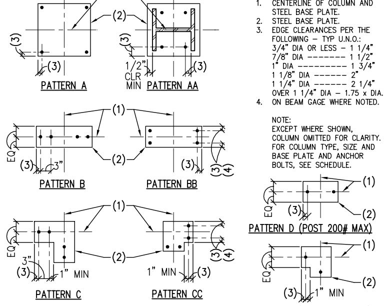

NOTES:

1. CENTERLINE OF COLUMN AND STEEL BASE PLATE.
2. STEEL BASE PLATE.
3. EDGE CLEARANCES PER THE FOLLOWING – TYP U.N.O.:
   - 3/4" DIA OR LESS – 1 1/4"
   - 7/8" DIA ------- 1 1/2"
   - 1" DIA --------- 1 3/4"
   - 1 1/8" DIA ------ 2"
   - 1 1/4" DIA ------ 2 1/4"
   - OVER 1 1/4" DIA – 1.75 x DIA.
4. ON BEAM GAGE WHERE NOTED.

NOTE:
EXCEPT WHERE SHOWN, COLUMN OMITTED FOR CLARITY. FOR COLUMN TYPE, SIZE AND BASE PLATE AND ANCHOR BOLTS, SEE SCHEDULE.

13 PLAN – TYPICAL STEEL COLUMN BASE PLATE PATTERNS

401-31 NO SCALE

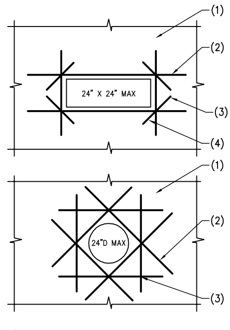

NOTES:

1. CONCRETE WALL
2. 2#5 EXTEND 2'-0" PAST ENDS OF OPENING.
3. 2#5 EXTEND 2'-0" PAST TOP AND BOTTOM OF OPENING.
4. 1#4 X 2'-0" LONG CORNER BAR.

08 TYPICAL REINFORCING AT SMALL OPENINGS

278-02.04M NO SCALE

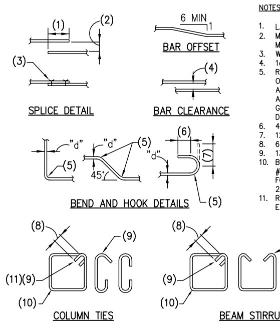

NOTES:

1. LAP – SEE G.S.N.
2. MAXIMUM 1/5 LAP BUT NOT MORE THAN 6".
3. WIRE TIES.
4. 1d (1" MINIMUM).
5. RADIUS=3d FOR BARS NOT OVER #8; 4d FOR #9, #10 AND #11 BARS; 5d FOR #14 AND #18 BARS. 5d FOR ALL GRADE 40 BARS WITH 180 DEGREE HOOK.
6. 4d (4" MINIMUM).
7. 12d (90 DEGREE HOOK).
8. 6d (4" MINIMUM).
9. 135 DEGREE BEND.
10. BEND AROUND 1 1/2" PIN FOR #3 BARS. BEND AROUND 2" PIN FOR #4 BARS. BEND AROUND 2 1/2" PIN FOR #5 BARS.
11. ROTATE TIE LOCATION 90 DEGREES EACH COURSE.

04 TYPICAL CONCRETE REINFORCING BAR DETAILS

201-32 NO SCALE

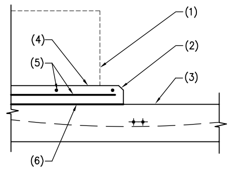

NOTES:

1. MECHANICAL UNIT PER PLAN.
2. CHAMFER EDGES.
3. POST TENSIONED CONCRETE SLAB.
4. 4" THICK CONCRETE EQUIPMENT PAD.
5. #3 AT 16" O.C. EACH WAY – CENTERED IN PAD.
6. SIKA ARMATEC 110 EPOCEM BONDING AGENT OR APPROVED EQUAL. INSTALL PER MANUFACTURER'S SPECIFICATIONS.

29 CONCRETE EQUIPMENT PAD ON POST-TENSIONED CONCRETE SLAB

101-51M NO SCALE

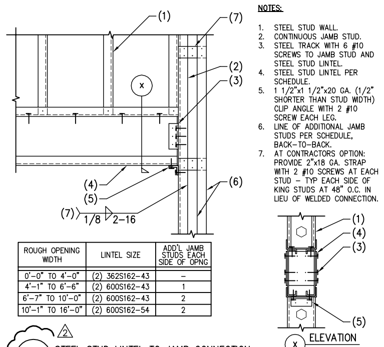

ROUGH OPENING WIDTH	LINTEL SIZE	ADD'L JAMB STUDS EACH SIDE OF OPNG
0'-0" TO 4'-0"	(2) 362S162-43	–
4'-1" TO 6'-6"	(2) 600S162-43	1
6'-7" TO 10'-0"	(2) 600S162-43	2
10'-1" TO 16'-0"	(2) 600S162-54	2

NOTES:

1. STEEL STUD WALL.
2. CONTINUOUS JAMB STUD.
3. STEEL TRACK WITH 6 #10 SCREWS TO JAMB STUD AND STEEL STUD LINTEL.
4. STEEL STUD LINTEL PER SCHEDULE.
5. 1 1/2"x1 1/2"x20 GA. (1/2" SHORTER THAN STUD WIDTH) CLIP ANGLE WITH 2 #10 SCREW EACH LEG.
6. LINE OF ADDITIONAL JAMB STUDS PER SCHEDULE, BACK-TO-BACK.
7. AT CONTRACTORS OPTION: PROVIDE 2"x18 GA. STRAP WITH 2 #10 SCREWS AT EACH STUD – TYP EACH SIDE OF KING STUDS AT 48" O.C. IN LIEU OF WELDED CONNECTION.

△2

24 STEEL STUD LINTEL TO JAMB CONNECTION

13-112 NO SCALE

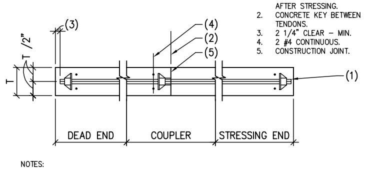

NOTES:

1. BURN OFF EXCESS STRAND BEHIND FACE OF CONC. AFTER STRESSING.
2. CONCRETE KEY BETWEEN TENDONS.
3. 2 1/4" CLEAR – MIN.
4. 2 #4 CONTINUOUS.
5. CONSTRUCTION JOINT.

NOTES:
STRESSING POCKET OR CONTINUOUS POURSTRIP AT STRESSING END TO BE DETERMINED BY CONTRACTOR.
AFTER STRESSING, STRAND HARDWARE SHALL BE COATED WITH RUST PREVENTIVE MASTIC BEFORE CONCRETING OR DRYPACKING.
TENDONS SHALL BE ADEQUATELY SUPPORTED TO MAINTAIN DESIGNED PROFILE. USE BOLSTERS IN LIEU OF CHARS AT LOW POINTS IN BEAMS.
ANCHORAGE HARDWARE MUST BE ICC APPROVED.
TENDONS SHALL BE UNBONDED 1/2" DIA X 7" STRAND WIRE WRAPPED AND COATED WITH RUST PREVENTIVE MASTIC.

19 TYPICAL TENDON STRESSING

246-06M NO SCALE

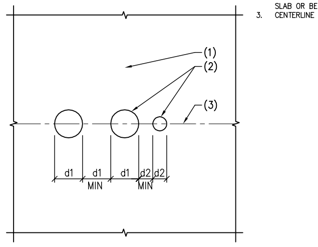

NOTES:

1. CONCRETE SLAB OR BEAM.
2. SLEEVES THRU CONCRETE SLAB OR BEAM.
3. CENTERLINE OF SLEEVES.

14 PLAN – SLEEVES IN CONCRETE SLABS OR BEAMS

13-112 NO SCALE

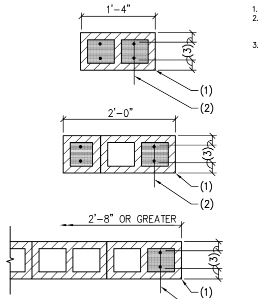

NOTES:

1. MASONRY WALL.
2. 2 #5 FULL WALL HEIGHT – SOLID GROUT ALL CELLS AS SHOWN.
3. FOR CLEARANCES, SEE TYPICAL LAP DETAIL.

NOTE:
THIS DETAIL TYPICAL AT ALL DOOR AND WINDOW OPENINGS – U.N.O.
CLEARANCES TYPICAL U.N.O.

09 PLANS – REINFORCING OF MASONRY WALL JAMBS

501-55 NO SCALE

THESE DRAWINGS/CALCULATIONS ARE CONSIDERED PRELIMINARY –NOT FOR CONSTRUCTION OR RECORDING UNLESS THE STRUCTURAL ENGINEER OF RECORD'S SEAL IS AFFIXED WITH WRITTEN SIGNATURE.

AWBREY
COOK
MCGILL
architects
1045 14th Street, Suite 100
San Diego, CA 92101-5701
Phone: 619 . 398 . 3480

ARCHITECTS:
THOMAS B. AWBREY C 17578
CLIFFORD W. COOK C 19705
SCOT W. McGILL C 21059

42194
BRADY K. NOTBOHM
8/22/14
EXPIRES 03-31-17

Copyright © 2014
AWBREY COOK MCGILL ARCHITECTS
All ideas, designs, and arrangements indicated on these drawings are the property of AWBREY COOK MCGILL ARCHITECTS and are intended to be used in connection with this specific project only and shall not otherwise be used for any purpose whatsoever without the written consent of the architects. There shall be no changes or deviations from these drawings or the accompanying specifications without the written consent of the architects.

CONSULTANTS:

CARUSO
TURLEY
SCOTT
INC.
consulting
structural
engineers
1215 W. Rio Salado Pkwy
Suite 200
Tempe, Arizona 85281
(480) 774-1700
(480) 774-1701 FAX
www.ctsaz.com

ENGINEER: TRM/BKN – JOB NUMBER: 13-112

REVISIONS:

△1 PLAN CHECK CORRECTIONS 2/28/14

PROJECT:

Residence Inn Marriott
COURTYARD Marriott

MARRIOTT RESIDENCE INN
- COURTYARD @ LUHRS
A Development of - LUHRS CM, LLC
Phoenix, Arizona

DRAWN: SMV
CHECKED: BKN/TRM
DATE: 12/16/13
PROJECT NO.: 12-1601
SHEET TITLE:
TYPICAL
DETAILS

SHEET NO.:
S0.3

FINAL FOR CONSTRUCTION - 05/18/15

AWBREY . COOK . McGILL . ARCHITECTS 1045 14th Street Suite 100, San Diego, California 92101.5701 Telephone 619.398.3480 Fax. 619.398.3488

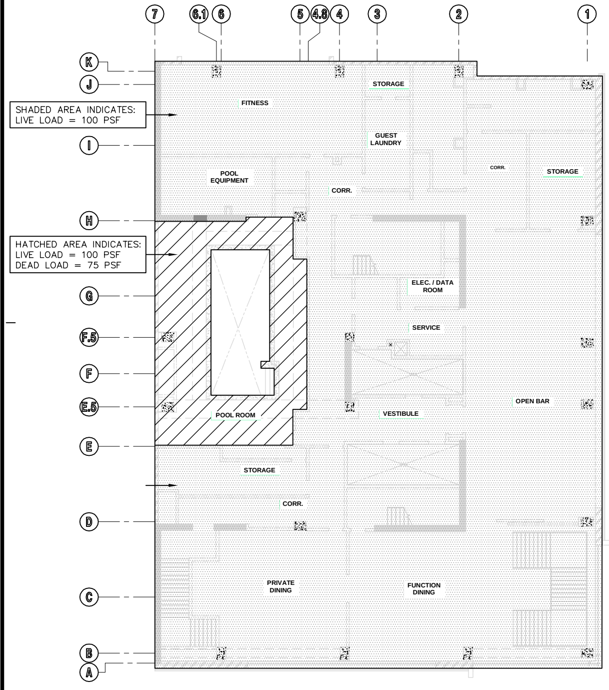
7
6.1
6
5
4.8
4
3
2
1
K
J
I
H
G
F.5
F
E.5
E
D
C
B
A
FITNESS
STORAGE
GUEST LAUNDRY
POOL EQUIPMENT
CORR.
STORAGE
ELEC. / DATA ROOM
SERVICE
POOL ROOM
VESTIBULE
OPEN BAR
STORAGE
CORR.
PRIVATE DINING
FUNCTION DINING

SHADED AREA INDICATES:
LIVE LOAD = 100 PSF

HATCHED AREA INDICATES:
LIVE LOAD = 100 PSF
DEAD LOAD = 75 PSF

4th FLOOR LEVEL
N.T.S.

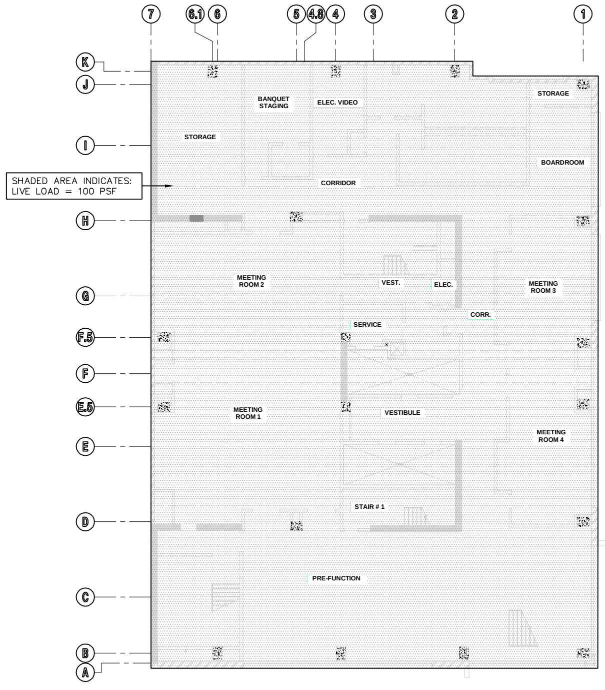
BANQUET STAGING
ELEC. VIDEO
STORAGE
BOARDROOM
STORAGE
CORRIDOR
MEETING ROOM 2
VEST.
ELEC.
MEETING ROOM 3
CORR.
SERVICE
MEETING ROOM 1
VESTIBULE
MEETING ROOM 4
STAIR # 1
PRE-FUNCTION

SHADED AREA INDICATES:
LIVE LOAD = 100 PSF

3rd FLOOR LEVEL
N.T.S.

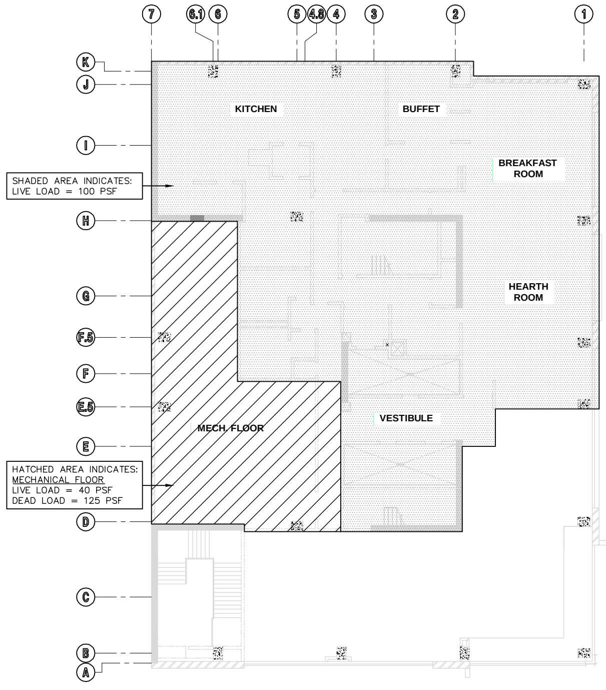
KITCHEN
BUFFET
BREAKFAST ROOM
HEARTH ROOM
MECH. FLOOR
VESTIBULE

SHADED AREA INDICATES:
LIVE LOAD = 100 PSF

HATCHED AREA INDICATES:
MECHANICAL FLOOR
LIVE LOAD = 40 PSF
DEAD LOAD = 125 PSF

2nd FLOOR LEVEL
N.T.S.

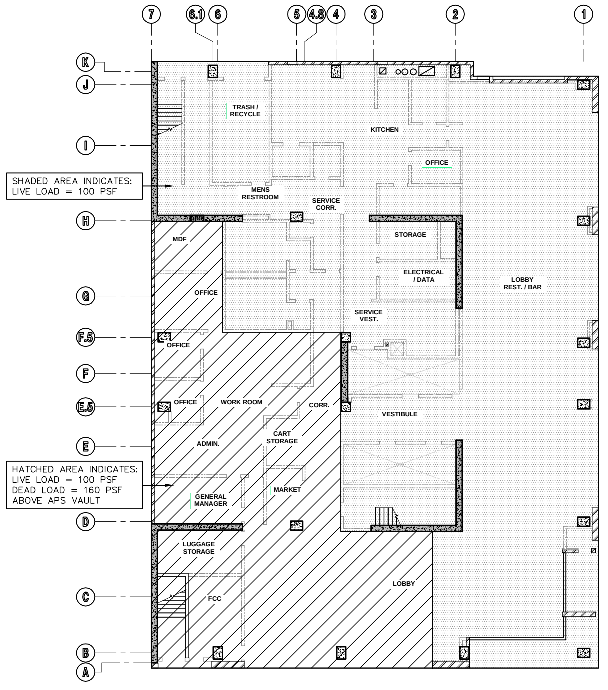
TRASH / RECYCLE
KITCHEN
OFFICE
MENS RESTROOM
SERVICE CORR.
MDF
STORAGE
OFFICE
ELECTRICAL / DATA
LOBBY REST. / BAR
SERVICE VEST.
OFFICE
OFFICE
WORK ROOM
CORR.
VESTIBULE
ADMIN.
CART STORAGE
GENERAL MANAGER
MARKET
LUGGAGE STORAGE
FCC
LOBBY

SHADED AREA INDICATES:
LIVE LOAD = 100 PSF

HATCHED AREA INDICATES:
LIVE LOAD = 100 PSF
DEAD LOAD = 160 PSF
ABOVE APS VAULT

GROUND FLOOR LEVEL
N.T.S.

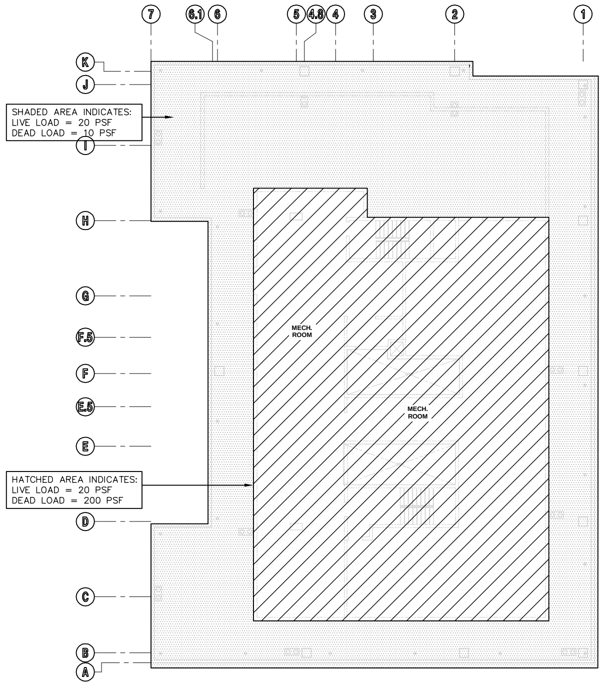
MECH. ROOM
MECH. ROOM

SHADED AREA INDICATES:
LIVE LOAD = 20 PSF
DEAD LOAD = 10 PSF

HATCHED AREA INDICATES:
LIVE LOAD = 20 PSF
DEAD LOAD = 200 PSF

ROOF PLAN
N.T.S.

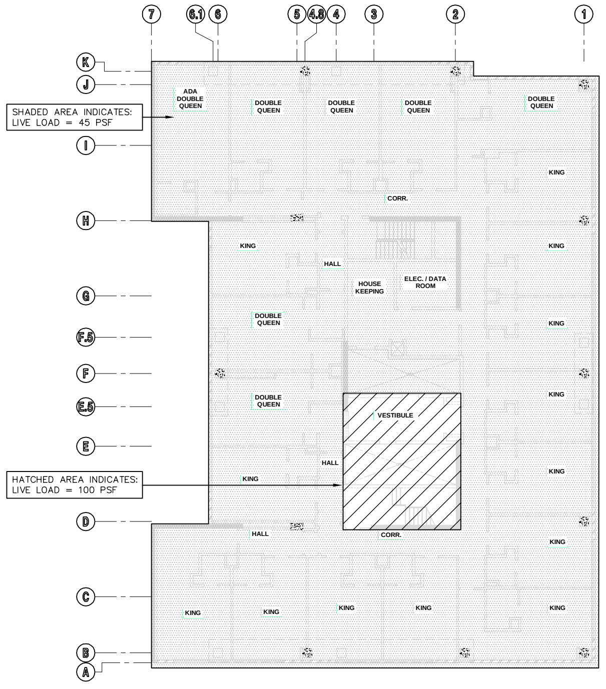
ADA DOUBLE QUEEN
DOUBLE QUEEN
DOUBLE QUEEN
DOUBLE QUEEN
DOUBLE QUEEN
KING
CORR.
KING
KING
HALL
HOUSE KEEPING
ELEC. / DATA ROOM
DOUBLE QUEEN
KING
DOUBLE QUEEN
KING
VESTIBULE
HALL
KING
KING
HALL
CORR.
KING
KING
KING
KING
KING

SHADED AREA INDICATES:
LIVE LOAD = 45 PSF

HATCHED AREA INDICATES:
LIVE LOAD = 100 PSF

10th FLOOR THRU 19th FLOOR LEVEL
N.T.S.

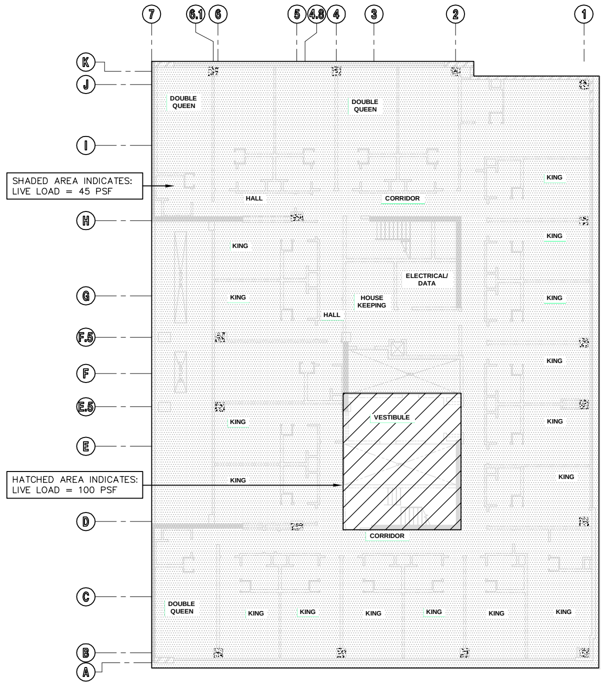
DOUBLE QUEEN
DOUBLE QUEEN
KING
HALL
CORRIDOR
KING
KING
ELECTRICAL/ DATA
KING
HOUSE KEEPING
HALL
KING
KING
KING
VESTIBULE
KING
KING
KING
CORRIDOR
DOUBLE QUEEN
KING
KING
KING
KING
KING
KING

SHADED AREA INDICATES:
LIVE LOAD = 45 PSF

HATCHED AREA INDICATES:
LIVE LOAD = 100 PSF

5th FLOOR THRU 9th FLOOR LEVEL
N.T.S.

THESE DRAWINGS/CALCULATIONS ARE CONSIDERED PRELIMINARY –NOT FOR CONSTRUCTION OR RECORDING UNLESS THE STRUCTURAL ENGINEER OF RECORD'S SEAL IS AFFIXED WITH WRITTEN SIGNATURE.

AWBREY
COOK
MCGILL
architects
1045 14th Street, Suite 100
San Diego, CA 92101-5701
Phone: 619 . 398 . 3480

ARCHITECTS:
THOMAS B. AWBREY C 17578
CLIFFORD W. COOK C 19705
SCOT W. McGILL C 21059

42194
BRADY K.
NOTBOHM
8/22/14
EXPIRES 03-31-17

Copyright © 2014
AWBREY COOK MCGILL ARCHITECTS
All ideas, designs, and arrangements indicated on these drawings are the property of AWBREY COOK MCGILL ARCHITECTS and are intended to be used in connection with this specific project only and shall not otherwise be used for any purpose whatsoever without the written consent of the architects. There shall be no changes or deviations from these drawings or the accompanying specifications without the written consent of the architects.

CONSULTANTS:

CARUSO
TURLEY
SCOTT
INC.
consulting
structural
engineers
1215 W. Rio Salado Pkwy
Suite 200
Tempe, Arizona 85281
(480) 774-1700
(480) 774-1701 FAX
www.ctsaz.com

ENGINEER: TRM/BKN – JOB NUMBER: 13–112

REVISIONS:

△1 PLAN CHECK CORRECTIONS 2/28/14

PROJECT:

MARRIOTT RESIDENCE INN
- COURTYARD @ LUHRS
A Development of - LUHRS CM, LLC
Phoenix, Arizona

DRAWN:	SMV
CHECKED:	BKN/TRM
DATE:	12/16/13
PROJECT NO.:	12–1601

SHEET TITLE:
DESIGN LOAD KEYPLAN

SHEET NO.:
△1 S0.4

AWBREY . COOK . McGILL . ARCHITECTS 1045 14th Street Suite 100, San Diego, California 92101.5701 Telephone 619.398.3480 Fax. 619.398.3488

FINAL FOR CONSTRUCTION - 05/18/15

CONCRETE COLUMN (C) SCHEDULE

CCS-2

910-32

NOTE: FOR ADDITIONAL INFORMATION, SEE G.S.N., TYPICAL DETAILS, PLANS AND OTHER DETAILS.

MARK	LEVEL	SIZE	STRENGTH (KSI)	REINFORCING		PATTERN
				VERTICAL	TIES AT 'S'	
C1	B1 – L5 L5 – L10 L10 – L19 L19 – LR	24" X 32" 24" X 24" 24" X 24" 24" X 24"	7 6 6 6	8 #11 8 #11 4 #11 8 #11	#4 AT 22" #4 AT 22" #4 AT 22" #4 AT 10"	'D' 'B' 'A' 'B'
C2	B1 – L5 L5 – L8 L8 – L9	24" X 32" 24" X 24" 24" X 24"	7 7 7	12 #11 8 #11 16 #11	#4 AT 22" #4 AT 22" #4 AT 10"	'D' 'B' 'C'
C3	B1 – L4 L4 – L5	24" X 32" 24" X 32"	7 7	12 #11 12 #11	#4 AT 22" #4 AT 12"	'E' 'E'
C4	L5 – L8 L8 – L10	24" X 24" 24" X 24"	6 6	8 #11 16 #11	#4 AT 22" #4 AT 10"	'B' 'C'
C5	L10 – L18 L19 – LR	24" X 24" 24" X 24"	6 6	4 #11 4 #11	#4 AT 22" #4 AT 10"	'A' 'A'
C6	B1 – L5 L5 – LR	24" X 32" 18" X 32"	7 6	12 #11 8 #11	#4 AT 22" #4 AT 18"	'E' 'D'
C7	B1 – L4	24" X 24"	6	8 #11	#4 AT 22"	'B'
C8	B1 – L4	16" X 36"	7	6 #9	#4 AT 16"	'F'
C9	B1 – L4 L4 – L8 L8 – L9	32" X 32" 24" X 24" 24" X 24"	7 7 7	8 #11 8 #11 16 #11	#4 AT 22" #4 AT 22" #4 AT 10"	'B' 'B' 'C'

NOTES:

1. ALL COLUMN REINFORCING SPLICES WITHIN 2 LEVELS OF TOP OF COLUMN SHALL BE TENSION LAPS OR ICC APPROVED TENSION SPLICES WITH 125% Fy CAPACITY. SUBMIT MECHANICAL SPLICES FOR APPROVAL BY ENGINEER OF RECORD.
   ALL OTHER COLUMN LAP SPLICES SHALL BE COMPRESSION SPLICES.
2. SEE DETAIL 10/S0.3 FOR ADDITIONAL TIE SPACING AND LAYOUT REQUIREMENTS.
3. COLUMN LAP SPLICES SHALL BE TENSION SPLICES FULL LENGTH OF COLUMN PER DETAIL 02/S0.2.

NOTES:

1. SLEEVED LIGHTNING PROTECTION PER G.S.N. LOCATIONS AS INDICATED ON ELECTRICAL DWGS. CENTER IN COLUMN.
2. TIES – FOR SIZE AND SPACING SEE PLAN AND SCHEDULE. ROTATE TIE SETS 90 DEGREES EACH COURSE.
3. CONCRETE COLUMN.
4. VERTICAL REINFORCING.
5. CONCRETE WALL PER PLAN.

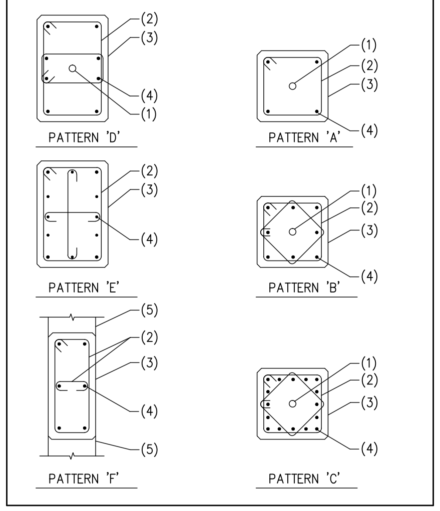
(2)
(3)
(4)
(1)
PATTERN 'D'
(1)
(2)
(3)
(4)
PATTERN 'A'
(2)
(3)
(4)
PATTERN 'E'
(1)
(2)
(3)
(4)
PATTERN 'B'
(5)
(2)
(3)
(4)
(5)
PATTERN 'F'
(1)
(2)
(3)
(4)
PATTERN 'C'

CONCRETE WALL REINFORCING (W) SCHEDULE

913-12

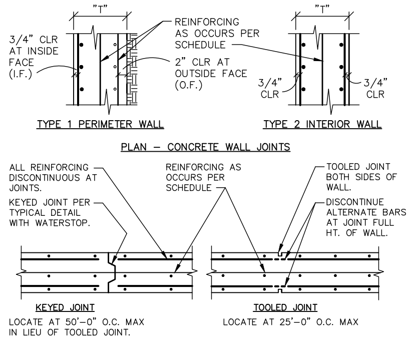
"T"
3/4" CLR AT INSIDE FACE (I.F.)
REINFORCING AS OCCURS PER SCHEDULE
2" CLR AT OUTSIDE FACE (O.F.)
TYPE 1 PERIMETER WALL
"T"
3/4" CLR
3/4" CLR
TYPE 2 INTERIOR WALL
PLAN – CONCRETE WALL JOINTS
ALL REINFORCING DISCONTINUOUS AT JOINTS.
KEYED JOINT PER TYPICAL DETAIL WITH WATERSTOP.
REINFORCING AS OCCURS PER SCHEDULE
TOOLED JOINT BOTH SIDES OF WALL.
DISCONTINUE ALTERNATE BARS AT JOINT FULL HT. OF WALL.
KEYED JOINT
TOOLED JOINT

KEYED JOINT: LOCATE AT 50'-0" O.C. MAX IN LIEU OF TOOLED JOINT.

TOOLED JOINT: LOCATE AT 25'-0" O.C. MAX

NOTE:
1. f'c = 6000 PSI (56 DAY) U.N.O.
2. FOR ADDITIONAL INFORMATION, SEE G.S.N., PLAN AND DETAILS.

MARK	"T"	REINFORCING	REMARKS
W1	8"	#5 AT 16" O.C. EACH WAY, CENTERED	---
W2	12"	#5 VERTS AT 12" O.C. EACH FACE #5 HORIZONTALS AT 18" O.C. EACH FACE	---
W3	12"	#6 VERTS AT 16" O.C. EACH FACE #6 HORIZONTALS AT 16" O.C. EACH FACE	---

STEEL COLUMN (SC) SCHEDULE

910-01

NOTE: FOR ANCHOR BOLT PATTERN, SEE TYPICAL DETAIL 13

MARK	SIZE	BASE CONNECTION	BOLT PATTERN AND/OR REMARKS
SC1	HSS 6x6x1/4"	3/4" X 12" X 12" STEEL PLATE WITH 4-3/4" DIA ANCHOR BOLTS	---
SC2	HSS 6x6x1/4"	3/4" X 12" X 18" STEEL PLATE WITH 6-3/4" DIA ANCHOR BOLTS	SEE DETAIL 311
SC3	HSS 6x6x3/8"	3/4" X 12" X 12" STEEL PLATE WITH 4-3/4" DIA ANCHOR BOLTS	ELEV. RAIL SUPPORT COLUMN
SC4	HSS 8x8x3/8"	3/4" X 12" X 12" STEEL PLATE WITH 4-3/4" DIA ANCHOR BOLTS	---

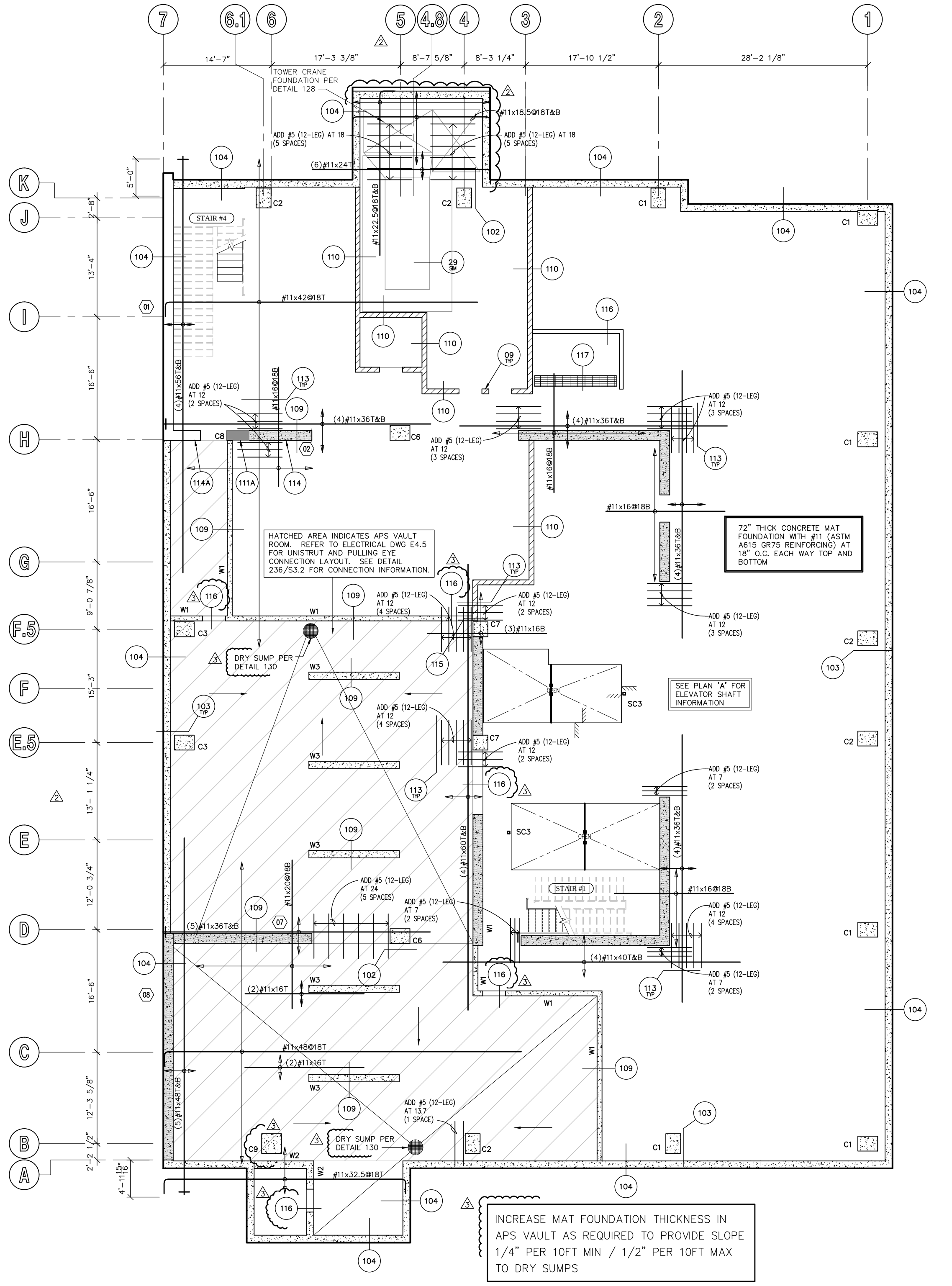
7
6.1
6
5
4.8
4
3
2
1
14'-7"
17'-3 3/8"
8'-7 5/8"
8'-3 1/4"
17'-10 1/2"
28'-2 1/8"
TOWER CRANE FOUNDATION PER DETAIL 128
ADD #5 (12-LEG) AT 18 (5 SPACES)
#11x18.5@18T&B
(6)#11x24T
#11x22.5@18T&B
#11x42@18T
K
J
I
H
G
F.5
F
E.5
E
D
C
B
A
5'-0"
13'-4"
16'-6"
16'-6"
9'-0 7/8"
15'-3"
13'-1 1/4"
12'-0 3/4"
16'-6"
12'-3 5/8"
2'-2 1/2"
STAIR #4
STAIR #3
(4)#11x36T&B
#11x16@18B
#11x16@18B
(4)#11x36T&B
(3)#11x16B
(4)#11x60T&B
#11x20@18B
(5)#11x36T&B
(2)#11x16T
(4)#11x40T&B
#11x48@18T
(2)#11x16T
(5)#11x48T&B
#11x32.5@18T
ADD #5 (12-LEG) AT 12 (3 SPACES)
ADD #5 (12-LEG) AT 12 (4 SPACES)
ADD #5 (12-LEG) AT 12 (2 SPACES)
ADD #5 (12-LEG) AT 7 (2 SPACES)
ADD #5 (12-LEG) AT 24 (5 SPACES)
ADD #5 (12-LEG) AT 13.7 (1 SPACE)
HATCHED AREA INDICATES APS VAULT ROOM. REFER TO ELECTRICAL DWG E4.5 FOR UNISTRUT AND PULLING EYE CONNECTION LAYOUT. SEE DETAIL 236/S3.2 FOR CONNECTION INFORMATION.
72" THICK CONCRETE MAT FOUNDATION WITH #11 (ASTM A615 GR75 REINFORCING) AT 18" O.C. EACH WAY TOP AND BOTTOM
DRY SUMP PER DETAIL 130
SEE PLAN 'A' FOR ELEVATOR SHAFT INFORMATION
OPEN
C1
C2
C3
C6
C7
C8
C9
SC3
W1
W2
W3
102
103
104
109
110
111A
113 TYP
114
114A
115
116
117
29 SIM

INCREASE MAT FOUNDATION THICKNESS IN APS VAULT AS REQUIRED TO PROVIDE SLOPE 1/4" PER 10FT MIN / 1/2" PER 10FT MAX TO DRY SUMPS

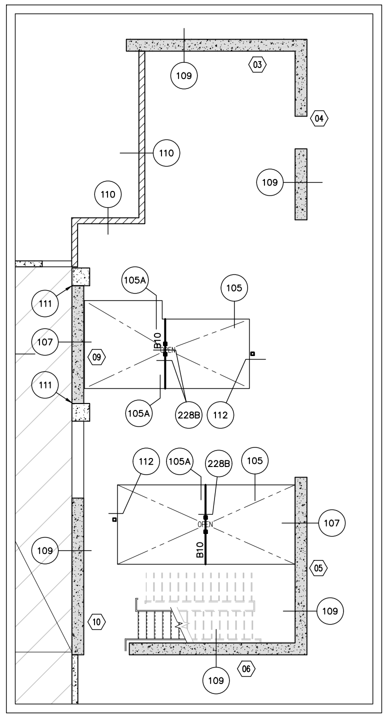
109
03
04
110
109
110
111
107
111
105A
B10
105
09
105A
228B
112
112
105A
228B
105
107
109
B10
05
109
10
109
06

A ELEVATOR SHAFT PLAN

CONCRETE SLAB NOTE

13-112

CONCRETE POST-TENSIONED SLAB THICKNESS BY LEVEL:

L1-L4 = 10" THICK (f'c=6 ksi AT 56 DAYS)
L5-L19 = 8" THICK (f'c=6 ksi AT 56 DAYS)
LR = 12" THICK (f'c=6 ksi AT 56 DAYS)

BASEMENT PLAN

SCALE: 1/8" = 1'-0"

PLAN NOTES – TYP U.N.O.:

1. **VERIFY ALL DIMENSIONS WITH ARCHITECTURAL DRAWINGS AND FIELD CONDITIONS. BUILDING DIMENSIONS, WHERE SHOWN, WERE PROVIDED BY THE ARCHITECT AND SHALL BE VERIFIED WITH SAME PRIOR TO PROCEEDING WITH THE WORK.**
2. SCHEDULED MARK DESIGNATIONS ARE TYPICAL TO THE PROJECT AND MAY NOT NECESSARILY BE FOUND ON THIS PLAN.
3. ▨ – AS SHOWN ON PLAN INDICATES 8" MASONRY WALL, SEE G.S.N., TYPICAL DETAILS, PLANS AND DETAILS FOR ADDITIONAL INFORMATION. ALL REINFORCING SHOWN AND/OR NOTED SHALL BE FULL HEIGHT OF WALL – TYP U.N.O.
4. ▨ – AS SHOWN ON PLAN INDICATES 600S162-54 STEEL STUD WALL. SEE PLAN FOR SIZES. STEEL STUDS SHALL BE SPACED AT 16" O.C. FOR LINTELS IN STEEL STUD WALLS, SEE DETAIL 24 – TYP U.N.O. SEE G.S.N., TYPICAL DETAILS, PLANS AND OTHER DETAILS FOR ADDITIONAL INFORMATION.
5. B1, B2, ETC – AS SHOWN ON PLAN INDICATES STEEL BEAM, SEE SCHEDULE THIS SHEET.
6. C1, C2, ETC – AS SHOWN ON PLAN INDICATES CONCRETE COLUMN, SEE SCHEDULE THIS THIS SHEET.
7. SC1, SC2, ETC – AS SHOWN ON PLAN INDICATES STEEL COLUMN, SEE SCHEDULE THIS SHEET.
8. ML1, ML2, ETC – AS SHOWN ON PLAN INDICATES MASONRY LINTEL, SEE SCHEDULE THIS SHEET, G.S.N. AND TYPICAL DETAILS.
9. W1, W2, ETC – AS SHOWN ON PLAN INDICATES CONCRETE WALL REINFORCING. SEE SCHEDULE THIS SHEET.
10. FOR MISCELLANEOUS LINTELS NOT SHOWN, SEE G.S.N. AND TYPICAL DETAILS. MASONRY CONTRACTOR SHALL COORDINATE WITH OTHER TRADES FOR EXACT SIZE AND LOCATION REQUIREMENTS.
11. MAS C.J. – AS SHOWN ON PLAN INDICATES MASONRY CONTROL JOINT IN MASONRY WALL AND/OR LINTEL, SEE G.S.N. AND TYPICAL DETAILS. JOINTS MAY BE SHOWN, BUT NOT NOTED ON THIS PLAN. SEE FOUNDATION PLAN FOR NOTED LOCATIONS.
12. CONCRETE TOPPING SHALL BE AS NOTED ON PLAN. VERIFY EXACT SIZE AND LOCATION OF DEPRESSED AND/OR RAISED SLABS WITH ARCH'L DRAWINGS. CONTROL JOINTS SHALL BE PER G.S.N. AND TYPICAL DETAILS. FOR ADDITIONAL INFORMATION, SEE G.S.N. AND DETAILS. CONTRACTOR TO VERIFY, AND BE RESPONSIBLE FOR VARIATIONS IN CONCRETE QUANTITY DUE TO CAMBER, CONSTRUCTION DEAD LOAD DEFLECTIONS, AND/OR TOLERANCES OF STRUCTURAL ELEMENTS (i.e. BEAMS, DECK, ETC.).
13. FOR CLARITY, DETAILS MAY SHOW ONLY ONE SIDE OF FRAMING CONDITIONS. ALL OPENINGS MAY NOT BE SHOWN ON THIS PLAN. FOR EXACT SIZE, NUMBER AND LOCATION OF OPENINGS, SEE ARCHITECTURAL, MECHANICAL, PLUMBING, ELECTRICAL, SPRINKLER AND THEIR RELATED DRAWINGS. FOR FRAMING AT OPENINGS, SEE TYPICAL DETAILS.
14. VERIFY EXACT SIZE, WEIGHT AND LOCATION OF EQUIPMENT AND SUPPORTS INDICATED ON PLAN WITH ARCHITECTURAL, MECHANICAL, PLUMBING, ELECTRICAL, SPRINKLER AND THEIR RELATED DRAWINGS. EQUIPMENT INDICATED ARE ONLY THOSE THAT EXCEED LOADS SPECIFIED IN THE G.S.N. FOR SUPPORT OF EQUIPMENT, SEE TYPICAL DETAILS AND OTHER TRADES.
15. CB1, CB2, ETC – AS SHOWN ON PLAN INDICATES CONCRETE BEAM, SEE SCHEDULE THIS SHEET.
16. SR1, SR2, ETC – AS SHOWN ON PLAN INDICATES STUD RAIL, SEE SCHEDULE THIS SHEET.

AWBREY
COOK
MCGILL
architects
1045 14th Street, Suite 100
San Diego, CA 92101-5701
Phone: 619 . 398 . 3480

ARCHITECTS:

THOMAS B. AWBREY	C 17578
CLIFFORD W. COOK	C 19705
SCOT W. McGILL	C 21059

42194
BRADY K.
NOTBOHM
8/22/14
EXPIRES 03-31-17

Copyright © 2014
AWBREY COOK MCGILL ARCHITECTS
All ideas, designs, and arrangements indicated on these drawings are the property of AWBREY COOK MCGILL ARCHITECTS and are intended to be used in connection with this specific project only and shall not otherwise be used for any purpose whatsoever without the written consent of the architects. There shall be no changes or deviations from these drawings or the accompanying specifications without the written consent of the architects.

CONSULTANTS:

CARUSO
TURLEY
SCOTT
INC.
consulting
structural
engineers
1215 W. Rio Salado Pkwy
Suite 200
Tempe, Arizona 85281
(480) 774-1700
(480) 774-1701 FAX
www.ctsaz.com

ENGINEER: TRM/BKN – JOB NUMBER: 13-112

REVISIONS:

CONSTRUCTION BID SET	03/09/2015
△2 INSTRUCTION BULLETIN 2	05/11/2015
△3 INSTRUCTION BULLETIN 3	06/16/2015

PROJECT:

MARRIOTT RESIDENCE INN
- COURTYARD @ LUHRS
A Development of - LUHRS CM, LLC
Phoenix, Arizona

DRAWN:	SMV
CHECKED:	BKN/TRM
DATE:	12/16/13
PROJECT NO.:	12-1601

SHEET TITLE:
BASEMENT
PLAN

SHEET NO.:
S1.0

THESE DRAWINGS/CALCULATIONS ARE CONSIDERED PRELIMINARY –NOT FOR CONSTRUCTION OR RECORDING UNLESS THE STRUCTURAL ENGINEER OF RECORD'S SEAL IS AFFIXED WITH WRITTEN SIGNATURE.

AWBREY . COOK . McGILL . ARCHITECTS 1045 14th Street Suite 100, San Diego, California 92101.5701 Telephone 619.398.3480 Fax. 619.398.3488

FINAL FOR CONSTRUCTION - 05/18/15

STUD RAIL (SR) SCHEDULE (L1 – L4)

13–112

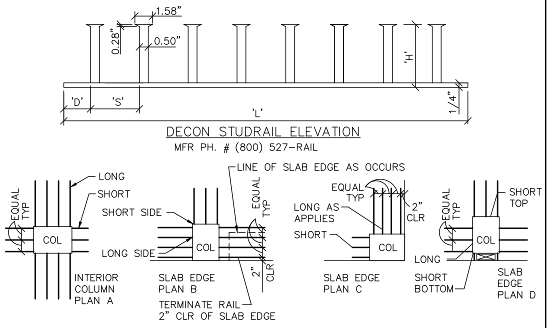

NOTE:
1. LOCATE END OF STUD RAILS AT FACE OF COLUMN.
2. INSTALL WITH TOP AND BOTTOM CLEARANCE TO SLAB PER G.S.N.
3. INSTALL TYPICAL RAIL PER SCHEDULE BELOW. TERMINATE RAIL AS REQUIRED AT SLAB EDGE.

STUD RAILS

MARK	# STUDS PER RAIL	LENGTH 'L'	HEIGHT 'H'	SPACING 'S'	DISTANCE 'D'	RAILS PER COLUMN
SR1	SHORT 3 LONG 6	SHORT 16 3/4" LONG 37 3/4"	8 1/2"	5 3/4"	3 1/8"	3 SHORT SIDE 3 LONG SIDE (12 TOTAL PER D)
SR2	EDGE 5 7	EDGE 20 5/8" 27 5/8"	8 1/2"	3 1/2"	3 1/8"	3 SHORT SIDE 3 LONG SIDE (9 TOTAL PER B)
SR3	8	37 3/4"	8 1/2"	4 1/2"	3 1/8"	3 SHORT SIDE–3 LONG SIDE (9 TOTAL PER B)
SR4	12	45"	8 1/2"	3 1/2"	3 1/8"	3 SHORT SIDE–3 LONG SIDE (9 TOTAL PER B)
SR5	SHORT 20 LONG 20	SHORT 47 1/4" LONG 47 1/4"	8 1/2"	2 1/4"	2 1/4"	3 SHORT SIDE 3 LONG SIDE (12 TOTAL PER D)
SR5A	21	124 1/2"	8 1/2"	5 7/8"	3 1/8"	3 SHORT SIDE 3 LONG SIDE (11 TOTAL – SIM TO D)
SR6	EDGE 3 5	EDGE 17 3/4" 29 1/4"	8 1/2"	5 3/4"	3 1/8"	3 SHORT SIDE 3 LONG SIDE (12 TOTAL PER D)
SR7	6	35"	8 1/2"	5 3/4"	3 1/8"	3 EACH SIDE (12 TOTAL PER A)
SR8	17	45"	6 1/2"	2 1/2"	2 1/4"	3 SHORT SIDE–4 LONG SIDE (14 TOTAL PER D)
SR9	23	54"	8 1/2"	2 1/4"	2 1/4"	3 EACH SIDE (12 TOTAL PER D)
SR9A	17	40 1/2	8 1/2"	2 1/4"	2 1/4"	4 SHORT SIDE 4 LONG SIDE (16 TOTAL SIM PER B)
SR10	9	39 1/8"	8 1/2"	4"	3 1/8"	3 EACH SIDE (9 TOTAL PER B)
SR11	SHORT 7 LONG 7	SHORT 32" LONG 32"	6 1/2"	4 1/4"	2 1/4"	3 SHORT SIDE 4 LONG SIDE (14 TOTAL SIM PER A)
SR12	7	27 1/4"	8 1/2"	3 1/2"	3 1/8"	3 SHORT SIDE 3 LONG SIDE (9 TOTAL SIM PER B)

SEE STEEL STUD RAIL SCHEDULES (L5 – L19) & (LR)

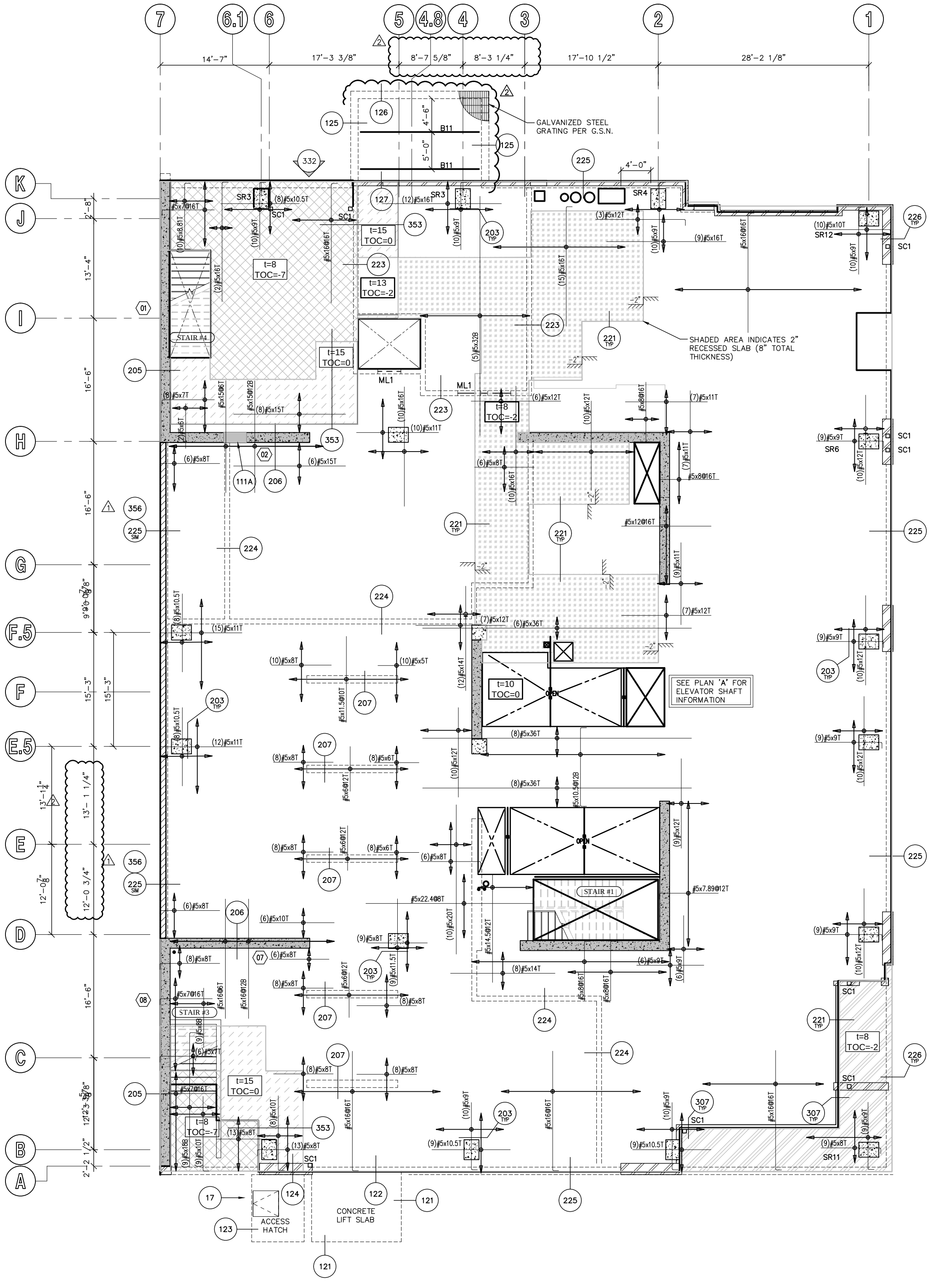

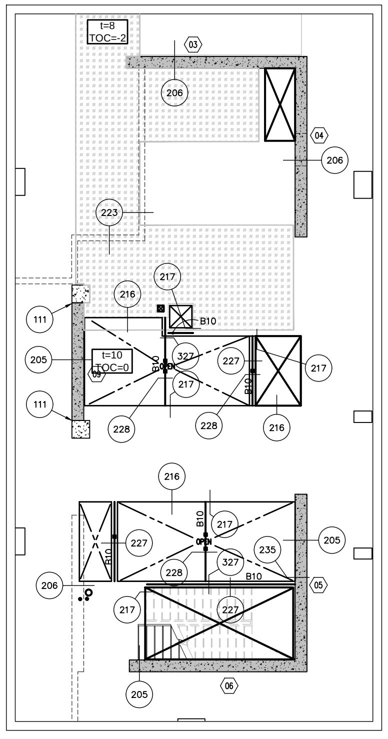

ELEVATOR SHAFT PLAN

A

CONCRETE SLAB NOTE

13–112

CONCRETE POST–TENSIONED SLAB THICKNESS BY LEVEL:
L1–L4 = 10" THICK (f'c=6 ksi AT 56 DAYS)
L5–L19 = 8" THICK (f'c=6 ksi AT 56 DAYS)
LR = 12" THICK (f'c=6 ksi AT 56 DAYS)

FIRST FLOOR FRAMING PLAN

SCALE: 1/8" = 1'-0"

STEEL BEAM (B) SCHEDULE

919–02

NOTE:
1. FOR SIZE AND QUANTITY OF BOLTS, SEE TYPICAL BOLT DETAIL – U.N.O.
2. INDICATES POSITIVE BEAM CAMBER. WHERE "N/A" (NOT APPLICABLE) IS SHOWN, PROVIDE AS ROLLED CAMBER. INSTALL CROWN UP PER AISC.
3. FOR ADDITIONAL INFORMATION, SEE G.S.N., PLAN(s) AND DETAILS.

MARK	SIZE	CAMBER (SEE NOTE 2)	REMARKS
B1	W14 X 22	---	---
B2	W16 X 31	---	---
B3	W18 X 40	---	---
B4	W24 X 55	---	---
B5	W30 X 124	---	---
B6	HSS 12x6x1/4"	---	---
B7	HSS 12x10x3/8"	---	---
B8	C15 X 33.9	---	RADIUS BEAM PER ARCHITECTURAL AT B8A
B9	W8 X 31	---	---
B10	HSS 6x4x1/4"	---	---
B11	W12 X 35	---	---
B12	HSS 8x4x3/8"	---	RADIUS BEAM PER ARCHITECTURAL AT B12A

STEEL COLUMN (SC) SCHEDULE

910–01

NOTE: FOR ANCHOR BOLT PATTERN, SEE TYPICAL DETAIL 13

MARK	SIZE	BASE CONNECTION	BOLT PATTERN AND/OR REMARKS
SC1	HSS 6x6x1/4"	3/4" X 12" X 12" STEEL PLATE WITH 4–3/4" DIA ANCHOR BOLTS	---
SC2	HSS 6x6x1/4"	3/4" X 12" X 18" STEEL PLATE WITH 6–3/4" DIA ANCHOR BOLTS	SEE DETAIL 311
SC3	HSS 6x6x3/8"	3/4" X 12" X 12" STEEL PLATE WITH 4–3/4" DIA ANCHOR BOLTS	ELEV. RAIL SUPPORT COLUMN
SC4	HSS 8x8x3/8"	3/4" X 12" X 12" STEEL PLATE WITH 4–3/4" DIA ANCHOR BOLTS	---

MASONRY LINTEL (ML) SCHEDULE

937–01

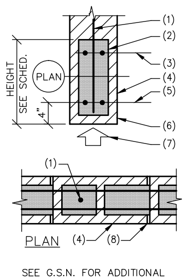

NOTES:
1. VERTICAL WALL REINFORCING.
2. TOP OF SOLID GROUT.
3. TOP REINFORCING WHERE INDICATED IN LINTEL SCHEDULE.
4. OPEN END BLOCKS – BLOCKS OPEN ONE SIDE.
5. REINFORCING – SEE SCHEDULE.
6. LINTEL "U" BLOCK.
7. SHORE LINTEL UNTIL GROUT REACHES DESIGN STRENGTH.
8. FULL MORTAR JOINTS ON VERTICAL AND HORIZONTAL FACE SHELLS.

NOTE:
A. VERTICAL REINFORCING TO MATCH AND LAP WALL REINFORCING PER G.S.N.
B. EXTEND GROUT, OPEN END MASONRY UNITS AND REINFORCING 24" PAST EACH JAMB. INSTALL CORNER BARS WHERE 24" CANNOT BE ACHIEVED.
C. DO NOT LAP SPLICE REINFORCING IN SINGLE SPAN LINTELS. WHERE SPLICES ARE REQUIRED IN MULTIPLE SPANS, LAP BOTTOM REINFORCING AT SUPPORTS AND TOP REINFORCING AT MIDSPAN.

SEE G.S.N. FOR ADDITIONAL INFORMATION.

MARK	HEIGHT	REINFORCING	REMARKS
ML1	16"	2 #5 BOTTOM	---

PLAN NOTES – TYP U.N.O.:

1. **VERIFY ALL DIMENSIONS WITH ARCHITECTURAL DRAWINGS AND FIELD CONDITIONS. BUILDING DIMENSIONS, WHERE SHOWN, WERE PROVIDED BY THE ARCHITECT AND SHALL BE VERIFIED WITH SAME PRIOR TO PROCEEDING WITH THE WORK.**
2. SCHEDULED MARK DESIGNATIONS ARE TYPICAL TO THE PROJECT AND MAY NOT NECESSARILY BE FOUND ON THIS PLAN.
3. ▨ – AS SHOWN ON PLAN INDICATES 8" MASONRY WALL, SEE G.S.N., TYPICAL DETAILS, PLANS AND DETAILS FOR ADDITIONAL INFORMATION. ALL REINFORCING SHOWN AND/OR NOTED SHALL BE FULL HEIGHT OF WALL – TYP U.N.O.
4. ▨ – AS SHOWN ON PLAN INDICATES 600S162–54 STEEL STUD WALL. SEE PLAN FOR SIZES. STEEL STUDS SHALL BE SPACED AT 16" O.C. FOR LINTELS IN STEEL STUD WALLS, SEE DETAIL 24 – TYP U.N.O. SEE G.S.N., TYPICAL DETAILS, PLANS AND OTHER DETAILS FOR ADDITIONAL INFORMATION.
5. B1, B2, ETC – AS SHOWN ON PLAN INDICATES STEEL BEAM, SEE SCHEDULE THIS SHEET.
6. C1, C2, ETC – AS SHOWN ON PLAN INDICATES CONCRETE COLUMN, SEE SCHEDULE THIS THIS SHEET.
7. SC1, SC2, ETC – AS SHOWN ON PLAN INDICATES STEEL COLUMN, SEE SCHEDULE THIS SHEET.
8. ML1, ML2, ETC – AS SHOWN ON PLAN INDICATES MASONRY LINTEL, SEE SCHEDULE THIS SHEET, G.S.N. AND TYPICAL DETAILS.
9. W1, W2, ETC – AS SHOWN ON PLAN INDICATES CONCRETE WALL REINFORCING. SEE SCHEDULE THIS SHEET.
10. FOR MISCELLANEOUS LINTELS NOT SHOWN, SEE G.S.N. AND TYPICAL DETAILS. MASONRY CONTRACTOR SHALL COORDINATE WITH OTHER TRADES FOR EXACT SIZE AND LOCATION REQUIREMENTS.
11. MAS C.J. – AS SHOWN ON PLAN INDICATES MASONRY CONTROL JOINT IN MASONRY WALL AND/OR LINTEL, SEE G.S.N. AND TYPICAL DETAILS. JOINTS MAY BE SHOWN, BUT NOT NOTED ON THIS PLAN. SEE FOUNDATION PLAN FOR NOTED LOCATIONS.
12. CONCRETE TOPPING SHALL BE AS NOTED ON PLAN. VERIFY EXACT SIZE AND LOCATION OF DEPRESSED AND/OR RAISED SLABS WITH ARCH'L DRAWINGS. CONTROL JOINTS SHALL BE PER G.S.N. AND TYPICAL DETAILS. FOR ADDITIONAL INFORMATION, SEE G.S.N. AND DETAILS. CONTRACTOR TO VERIFY, AND BE RESPONSIBLE FOR VARIATIONS IN CONCRETE QUANTITY DUE TO CAMBER, CONSTRUCTION DEAD LOAD DEFLECTIONS, AND/OR TOLERANCES OF STRUCTURAL ELEMENTS (i.e. BEAMS, DECK, ETC.).
13. FOR CLARITY, DETAILS MAY SHOW ONLY ONE SIDE OF FRAMING CONDITIONS. ALL OPENINGS MAY NOT BE SHOWN ON THIS PLAN. FOR EXACT SIZE, NUMBER AND LOCATION OF OPENINGS, SEE ARCHITECTURAL, MECHANICAL, PLUMBING, ELECTRICAL, SPRINKLER AND THEIR RELATED DRAWINGS. FOR FRAMING AT OPENINGS, SEE TYPICAL DETAILS.
14. VERIFY EXACT SIZE, WEIGHT AND LOCATION OF EQUIPMENT AND SUPPORTS INDICATED ON PLAN WITH ARCHITECTURAL, MECHANICAL, PLUMBING, ELECTRICAL, SPRINKLER AND THEIR RELATED DRAWINGS. EQUIPMENT INDICATED ARE ONLY THOSE THAT EXCEED LOADS SPECIFIED IN THE G.S.N. FOR SUPPORT OF EQUIPMENT, SEE TYPICAL DETAILS AND OTHER TRADES.
15. CB1, CB2, ETC – AS SHOWN ON PLAN INDICATES CONCRETE BEAM, SEE SCHEDULE THIS SHEET.
16. SR1, SR2, ETC – AS SHOWN ON PLAN INDICATES STUD RAIL, SEE SCHEDULE THIS SHEET.

THESE DRAWINGS/CALCULATIONS ARE CONSIDERED PRELIMINARY –NOT FOR CONSTRUCTION OR RECORDING UNLESS THE STRUCTURAL ENGINEER OF RECORD'S SEAL IS AFFIXED WITH WRITTEN SIGNATURE.

AWBREY
COOK
MCGILL
architects
1045 14th Street, Suite 100
San Diego, CA 92101-5701
Phone: 619 . 398 . 3480

ARCHITECTS:
THOMAS B. AWBREY C 17578
CLIFFORD W. COOK C 19705
SCOT W. McGILL C 21059

42194
BRADY K.
NOTBOHM
5/14/15
EXPIRES 03-31-17

Copyright © 2014
AWBREY COOK MCGILL ARCHITECTS
All ideas, designs, and arrangements indicated on these drawings are the property of AWBREY COOK MCGILL ARCHITECTS and are intended to be used in connection with this specific project only and shall not otherwise be used for any purpose whatsoever without the written consent of the architects. There shall be no changes or deviations from these drawings or the accompanying specifications without the written consent of the architects.

CONSULTANTS:

CARUSO
TURLEY
SCOTT
INC.
consulting
structural
engineers
1215 W. Rio Salado Pkwy
Suite 200
Tempe, Arizona 85281
(480) 774–1700
(480) 774–1701 FAX
www.ctsaz.com

ENGINEER: TRM/BKN – JOB NUMBER: 13–112

REVISIONS:

	CONSTRUCTION BID SET	03/09/2015
A	ADDENDUM A	02/02/2015
1	INSTRUCTION BULLETIN 1	02/23/2015
2	INSTRUCTION BULLETIN 2	05/11/2015

PROJECT:

MARRIOTT RESIDENCE INN
- COURTYARD @ LUHRS
A Development of - LUHRS CM, LLC
Phoenix, Arizona

DRAWN:	SMV
CHECKED:	BKN/TRM
DATE:	12/16/13
PROJECT NO.:	12–1601

SHEET TITLE:
FIRST FLOOR
FRAMING PLAN

SHEET NO.:
S1.1

AWBREY . COOK . McGILL . ARCHITECTS 1045 14th Street Suite 100, San Diego, California 92101.5701 Telephone 619.398.3480 Fax. 619.398.3488

FINAL FOR CONSTRUCTION - 05/18/15

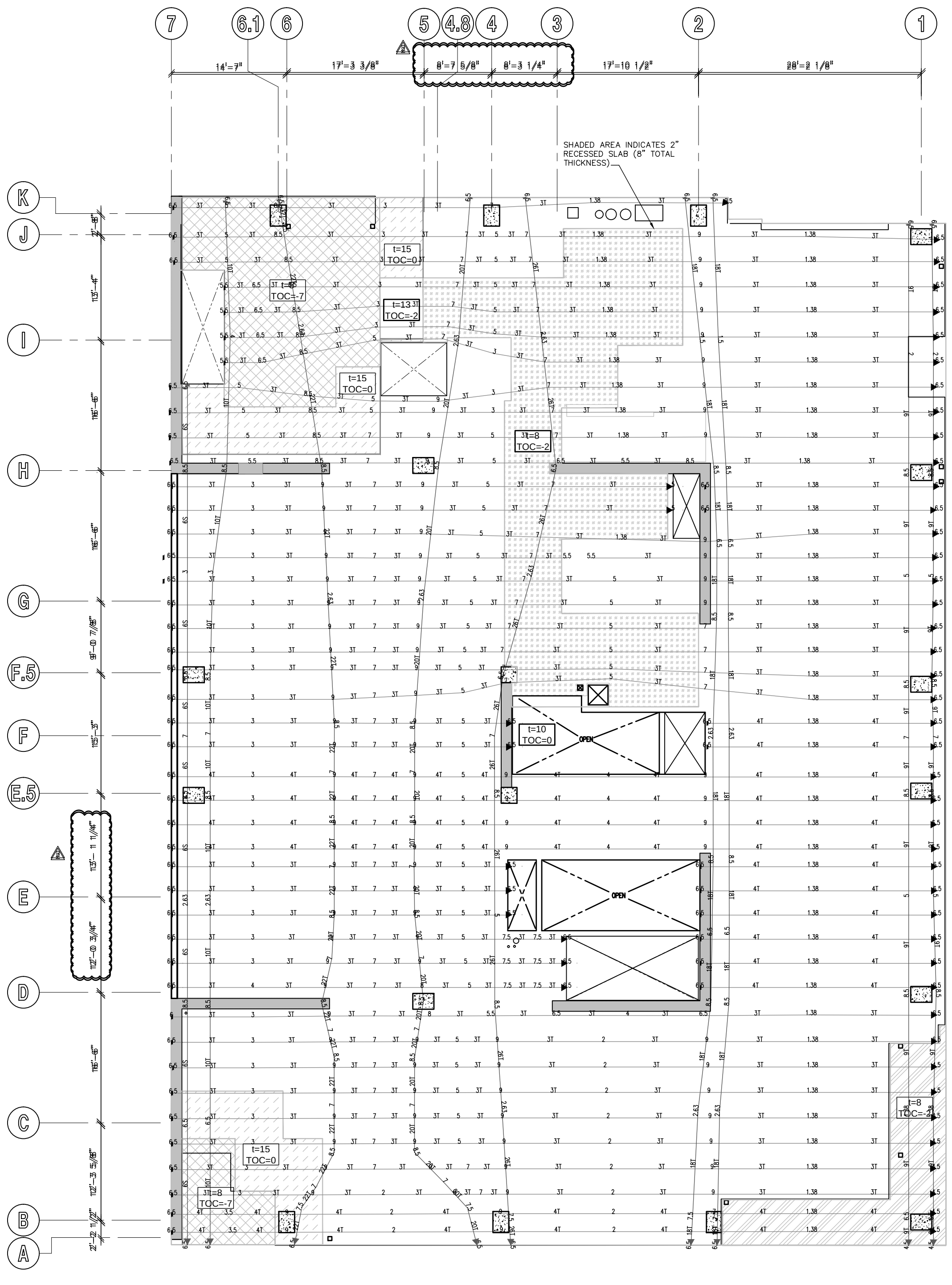

FIRST FLOOR POST-TENSION PLAN

SCALE: 1/8" = 1'-0"

POST TENSION AND SLAB REINFORCING DESIGNATION

931–31

POST TENSION LINE LEGEND

4T ◄━━━━┫ DENOTES SINGLE PULL BANDED TENDONS.

4T ◄━━━━► 4T DENOTES DOUBLE PULL BANDED TENDONS.

INDICATED NUMBER OF 1/2" DIA TENDONS FOR EFFECTIVE FORCE, SEE BELOW.

NOTE:
DIMENSIONS SHOWN ON PLAN INDICATE "DRAPE" OF TENDON FROM BOTTOM OF SLAB. INSTALL WITH 1" MIN CLEARANCE AT HIGH/LOW POSITIONING U.N.O.

EFFECTIVE FORCES:

1T = 26.8 kip,	2T = 53.5 kip,	3T = 80.3 kip,	4T = 107.0 kip
5T = 133.8 kip,	6T = 160.5 kip,	7T = 187.3 kip,	8T = 214.0 kip
9T = 245.8 kip,	10T = 267.5 kip,	11T = 294.3 kip,	12T = 321.0 kip
13T = 347.8 kip,	14T = 374.5 kip,	15T = 401.3 kip,	16T = 428.0 kip

MILD STEEL LINE LEGEND

12#5x16@6BM(EW)

- TOTAL NUMBER OF BARS. IF NUMBER IS NOT DESIGNATED, REINFORCING IS CONTINUOUS IN DIRECTION SHOWN.
- REINFORCING BAR SIZE.
- LENGTH (FEET). IF LENGTH IS NOT DESIGNATED REINFORCING IS CONTINUOUS AND LAPPED OVER LINE OF SUPPORT. LENGTH DOES NOT INCLUDE STANDARD HOOK AT END OF BAR.
- TYPICAL EACH WAY.
- TM=TOPMOST, T=TOP, C= CENTERED, B= BOTTOM BM = BOTTOMMOST.
  WHERE TWO LAYERS OF REINFORCING OCCUR IN SAME POSITION THE BOTTOMMOST OR TOPMOST LAYER SHALL BE FORMED WITH REINFORCING THAT HAS THE LARGEST AREA. REINFORCING SUPPORTING CANTILEVER CONDITION IS ALWAYS TOPMOST LAYER.
- REINFORCING SPACING (INCHES).

FOR ADDITIONAL INFORMATION, SEE G.S.N.. TYPICAL DETAILS, PLAN AND DETAILS.

EXTENT OF REINFORCING

12#5x16@6BM

SINGLE ARROW DENOTES EXTENT OF REINFORCING. DOUBLE ARROW DENOTES REINFORCING IS CONTINUOUS TO EDGE OR UNLESS NOTED OTHERWISE.

NOTE: SEE G.S.N., TYPICAL DETAILS AND PLAN FOR ADDITIONAL INFORMATION.

CONCRETE SLAB NOTE

13–112

CONCRETE POST–TENSIONED SLAB THICKNESS BY LEVEL:

L1–L4 = 10" THICK (f'c=6 ksi AT 56 DAYS)
L5–L19 = 8" THICK (f'c=6 ksi AT 56 DAYS)
LR = 12" THICK (f'c=6 ksi AT 56 DAYS)

AWBREY
COOK
MCGILL
architects
1045 14th Street, Suite 100
San Diego, CA 92101-5701
Phone: 619 . 398 . 3480

ARCHITECTS:
THOMAS B. AWBREY C 17578
CLIFFORD W. COOK C 19705
SCOT W. McGILL C 21059

42194
BRADY K.
NOTBOHM
5/14/15
EXPIRES 03-31-17

Copyright © 2014
AWBREY COOK MCGILL ARCHITECTS
All ideas, designs, and arrangements indicated on these drawings are the property of AWBREY COOK MCGILL ARCHITECTS and are intended to be used in connection with this specific project only and shall not otherwise be used for any purpose whatsoever without the written consent of the architects. There shall be no changes or deviations from these drawings or the accompanying specifications without the written consent of the architects.

CONSULTANTS:

CARUSO
TURLEY
SCOTT
INC.
consulting
structural
engineers
1215 W. Rio Salado Pkwy
Suite 200
Tempe, Arizona 85281
(480) 774-1700
(480) 774-1701 FAX
www.ctsaz.com

ENGINEER: TRM/BKN – JOB NUMBER: 13–112

REVISIONS:

CONSTRUCTION BID SET	03/09/2015
△2 INSTRUCTION BULLETIN 2	05/11/2015

THESE DRAWINGS/CALCULATIONS ARE CONSIDERED PRELIMINARY –NOT FOR CONSTRUCTION OR RECORDING UNLESS THE STRUCTURAL ENGINEER OF RECORD'S SEAL IS AFFIXED WITH WRITTEN SIGNATURE.

PROJECT:

MARRIOTT RESIDENCE INN
- COURTYARD @ LUHRS
A Development of - LUHRS CM, LLC
Phoenix, Arizona

DRAWN:	SMV
CHECKED:	BKN/TRM
DATE:	12/16/13
PROJECT NO.:	12–1601

SHEET TITLE:
FIRST FLOOR
POST-TENSION PLAN

SHEET NO.:
S1.1A

AWBREY . COOK . McGILL . ARCHITECTS 1045 14th Street Suite 100, San Diego, California 92101.5701 Telephone 619.398.3480 Fax. 619.398.3488

FINAL FOR CONSTRUCTION - 05/18/15

STUD RAIL (SR) SCHEDULE (L1 – L4)

13–112

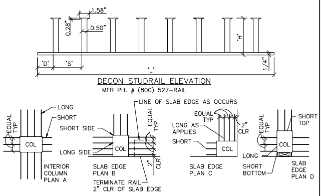
1.58"
0.28"
0.50"
'H'
'D'
'S'
'L'
1/4"
LONG
SHORT
SHORT SIDE
LONG SIDE
COL
EQUAL TYP
LINE OF SLAB EDGE AS OCCURS
2" CLR
LONG AS APPLIES
SHORT TOP
SHORT BOTTOM
INTERIOR COLUMN PLAN A
SLAB EDGE PLAN B
TERMINATE RAIL 2" CLR OF SLAB EDGE
SLAB EDGE PLAN C
SLAB EDGE PLAN D

DECON STUDRAIL ELEVATION
MFR PH. # (800) 527–RAIL

NOTE:
1. LOCATE END OF STUD RAILS AT FACE OF COLUMN.
2. INSTALL WITH TOP AND BOTTOM CLEARANCE TO SLAB PER G.S.N.
3. INSTALL TYPICAL RAIL PER SCHEDULE BELOW. TERMINATE RAIL AS REQUIRED AT SLAB EDGE.

STUD RAILS

MARK	# STUDS PER RAIL	LENGTH 'L'	HEIGHT 'H'	SPACING 'S'	DISTANCE 'D'	RAILS PER COLUMN
SR1	SHORT 3 LONG 6	SHORT 16 3/4" LONG 37 3/4"	8 1/2"	5 3/4"	3 1/8"	3 SHORT SIDE 3 LONG SIDE (12 TOTAL PER D)
SR2	EDGE 5 7	EDGE 20 5/8" 27 5/8"	8 1/2"	3 1/2"	3 1/8"	3 SHORT SIDE 3 LONG SIDE (9 TOTAL PER B)
SR3	8	37 3/4"	8 1/2"	4 1/2"	3 1/8"	3 SHORT SIDE–3 LONG SIDE (9 TOTAL PER B)
SR4	12	45"	8 1/2"	3 1/2"	3 1/8"	3 SHORT SIDE–3 LONG SIDE (9 TOTAL PER B)
SR5	SHORT 20 LONG 20	SHORT 47 1/4" LONG 47 1/4"	8 1/2"	2 1/4"	2 1/4"	3 SHORT SIDE 3 LONG SIDE (12 TOTAL PER D)
⚠1 SR5A	21	124 1/2"	8 1/2"	5 7/8"	3 1/8"	3 SHORT SIDE 3 LONG SIDE (11 TOTAL – SIM TO D)
SR6	EDGE 3 5	EDGE 17 3/4" 29 1/4"	8 1/2"	5 3/4"	3 1/8"	3 SHORT SIDE 3 LONG SIDE (12 TOTAL PER D)
SR7	6	35"	8 1/2"	5 3/4"	3 1/8"	3 EACH SIDE (12 TOTAL PER A)
SR8	17	45"	6 1/2"	2 1/2"	2 1/4"	3 SHORT SIDE–4 LONG SIDE (14 TOTAL PER D)
SR9	23	54"	8 1/2"	2 1/4"	2 1/4"	3 EACH SIDE (12 TOTAL PER D)
SR9A	17	40 1/2	8 1/2"	2 1/4"	2 1/4"	4 SHORT SIDE 4 LONG SIDE (16 TOTAL SIM PER B)
SR10	9	39 1/8"	8 1/2"	4"	3 1/8"	3 EACH SIDE (9 TOTAL PER B)
SR11	SHORT 7 LONG 7	SHORT 32" LONG 32"	6 1/2"	4 1/4"	2 1/4"	3 SHORT SIDE 4 LONG SIDE (14 TOTAL SIM PER A)
SR12	7	27 1/4"	8 1/2"	3 1/2"	3 1/8"	3 SHORT SIDE 3 LONG SIDE (9 TOTAL SIM PER B)

SEE STEEL STUD RAIL SCHEDULES (L5 – L19) & (LR)

STEEL BEAM (B) SCHEDULE

919–02

NOTE:
1. FOR SIZE AND QUANTITY OF BOLTS, SEE TYPICAL BOLT DETAIL – U.N.O.
2. INDICATES POSITIVE BEAM CAMBER. WHERE "N/A" (NOT APPLICABLE) IS SHOWN, PROVIDE AS ROLLED CAMBER. INSTALL CROWN UP PER AISC.
3. FOR ADDITIONAL INFORMATION, SEE G.S.N., PLAN(s) AND DETAILS.

MARK	SIZE	CAMBER (SEE NOTE 2)	REMARKS
B1	W14 X 22	---	---
B2	W16 X 31	---	---
B3	W18 X 40	---	---
B4	W24 X 55	---	---
B5	W30 X 124	---	---
B6	HSS 12x6x1/4"	---	---
B7	HSS 12x10x3/8"	---	---
B8	C15 X 33.9	---	RADIUS BEAM PER ARCHITECTURAL AT B8A
B9	W8 X 31	---	---
B10	HSS 6x4x1/4"	---	---
B11	W12 X 35	---	---
B12	HSS 8x4x3/8"	---	RADIUS BEAM PER ARCHITECTURAL AT B12A

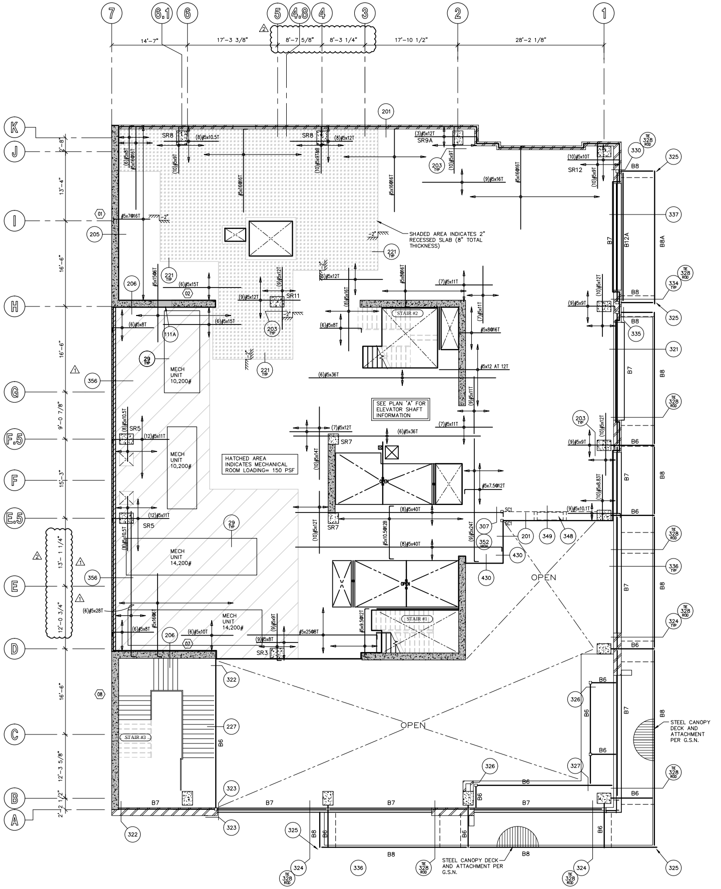
7
6.1
6
5
4.8
4
3
2
1
14'-7"
17'-3 3/8"
8'-7 5/8"
8'-3 1/4"
17'-10 1/2"
28'-2 1/8"
K
J
I
H
G
F.5
F
E.5
E
D
C
B
A
2'-8"
13'-4"
16'-6"
16'-6"
9'-0 7/8"
15'-3"
13'-1 1/4"
12'-0 3/4"
16'-6"
12'-3 5/8"
2'-2 1/2"
SHADED AREA INDICATES 2" RECESSED SLAB (8" TOTAL THICKNESS)
SEE PLAN "A" FOR ELEVATOR SHAFT INFORMATION
HATCHED AREA INDICATES MECHANICAL ROOM LOADING= 150 PSF
MECH UNIT 10,200#
MECH UNIT 10,200#
MECH UNIT 14,200#
MECH UNIT 14,200#
STAIR #1
STAIR #2
STAIR #3
OPEN
OPEN
STEEL CANOPY DECK AND ATTACHMENT PER G.S.N.
STEEL CANOPY DECK AND ATTACHMENT PER G.S.N.
SR1
SR3
SR5
SR7
SR8
SR9A
SR11
SR12
SC1
B6
B7
B8
B8A
B12A

STEEL COLUMN (SC) SCHEDULE

910–01

NOTE: FOR ANCHOR BOLT PATTERN, SEE TYPICAL DETAIL 13

MARK	SIZE	BASE CONNECTION	BOLT PATTERN AND/OR REMARKS
SC1	HSS 6x6x1/4"	3/4" X 12" X 12" STEEL PLATE WITH 4–3/4" DIA ANCHOR BOLTS	---
SC2	HSS 6x6x1/4"	3/4" X 12" X 18" STEEL PLATE WITH 6–3/4" DIA ANCHOR BOLTS	SEE DETAIL 311
SC3	HSS 6x6x3/8"	3/4" X 12" X 12" STEEL PLATE WITH 4–3/4" DIA ANCHOR BOLTS	ELEV. RAIL SUPPORT COLUMN
SC4	HSS 8x8x3/8"	3/4" X 12" X 12" STEEL PLATE WITH 4–3/4" DIA ANCHOR BOLTS	---

PLAN NOTES – TYP U.N.O.:

1. **VERIFY ALL DIMENSIONS WITH ARCHITECTURAL DRAWINGS AND FIELD CONDITIONS. BUILDING DIMENSIONS, WHERE SHOWN, WERE PROVIDED BY THE ARCHITECT AND SHALL BE VERIFIED WITH SAME PRIOR TO PROCEEDING WITH THE WORK.**
2. SCHEDULED MARK DESIGNATIONS ARE TYPICAL TO THE PROJECT AND MAY NOT NECESSARILY BE FOUND ON THIS PLAN.
3. ▨ – AS SHOWN ON PLAN INDICATES 8" MASONRY WALL, SEE G.S.N., TYPICAL DETAILS, PLANS AND DETAILS FOR ADDITIONAL INFORMATION. ALL REINFORCING SHOWN AND/OR NOTED SHALL BE FULL HEIGHT OF WALL – TYP U.N.O.
4. ▨ – AS SHOWN ON PLAN INDICATES 600S162–54 STEEL STUD WALL. SEE PLAN FOR SIZES. STEEL STUDS SHALL BE SPACED AT 16" O.C. FOR LINTELS IN STEEL STUD WALLS, SEE DETAIL 24 – TYP U.N.O. SEE G.S.N., TYPICAL DETAILS, PLANS AND OTHER DETAILS FOR ADDITIONAL INFORMATION.
5. B1, B2, ETC – AS SHOWN ON PLAN INDICATES STEEL BEAM, SEE SCHEDULE THIS SHEET.
6. C1, C2, ETC – AS SHOWN ON PLAN INDICATES CONCRETE COLUMN, SEE SCHEDULE THIS THIS SHEET.
7. SC1, SC2, ETC – AS SHOWN ON PLAN INDICATES STEEL COLUMN, SEE SCHEDULE THIS SHEET.
8. ML1, ML2, ETC – AS SHOWN ON PLAN INDICATES MASONRY LINTEL, SEE SCHEDULE THIS SHEET, G.S.N. AND TYPICAL DETAILS.
9. W1, W2, ETC – AS SHOWN ON PLAN INDICATES CONCRETE WALL REINFORCING. SEE SCHEDULE THIS SHEET.
10. FOR MISCELLANEOUS LINTELS NOT SHOWN, SEE G.S.N. AND TYPICAL DETAILS. MASONRY CONTRACTOR SHALL COORDINATE WITH OTHER TRADES FOR EXACT SIZE AND LOCATION REQUIREMENTS.
11. MAS C.J. – AS SHOWN ON PLAN INDICATES MASONRY CONTROL JOINT IN MASONRY WALL AND/OR LINTEL, SEE G.S.N. AND TYPICAL DETAILS. JOINTS MAY BE SHOWN, BUT NOT NOTED ON THIS PLAN. SEE FOUNDATION PLAN FOR NOTED LOCATIONS.
12. CONCRETE TOPPING SHALL BE AS NOTED ON PLAN. VERIFY EXACT SIZE AND LOCATION OF DEPRESSED AND/OR RAISED SLABS WITH ARCH'L DRAWINGS. CONTROL JOINTS SHALL BE PER G.S.N. AND TYPICAL DETAILS. FOR ADDITIONAL INFORMATION, SEE G.S.N. AND DETAILS. CONTRACTOR TO VERIFY, AND BE RESPONSIBLE FOR VARIATIONS IN CONCRETE QUANTITY DUE TO CAMBER, CONSTRUCTION DEAD LOAD DEFLECTIONS, AND/OR TOLERANCES OF STRUCTURAL ELEMENTS (i.e. BEAMS, DECK, ETC.).
13. FOR CLARITY, DETAILS MAY SHOW ONLY ONE SIDE OF FRAMING CONDITIONS. ALL OPENINGS MAY NOT BE SHOWN ON THIS PLAN. FOR EXACT SIZE, NUMBER AND LOCATION OF OPENINGS, SEE ARCHITECTURAL, MECHANICAL, PLUMBING, ELECTRICAL, SPRINKLER AND THEIR RELATED DRAWINGS. FOR FRAMING AT OPENINGS, SEE TYPICAL DETAILS.
14. VERIFY EXACT SIZE, WEIGHT AND LOCATION OF EQUIPMENT AND SUPPORTS INDICATED ON PLAN WITH ARCHITECTURAL, MECHANICAL, PLUMBING, ELECTRICAL, SPRINKLER AND THEIR RELATED DRAWINGS. EQUIPMENT INDICATED ARE ONLY THOSE THAT EXCEED LOADS SPECIFIED IN THE G.S.N. FOR SUPPORT OF EQUIPMENT, SEE TYPICAL DETAILS AND OTHER TRADES.
15. CB1, CB2, ETC – AS SHOWN ON PLAN INDICATES CONCRETE BEAM, SEE SCHEDULE THIS SHEET.
16. SR1, SR2, ETC – AS SHOWN ON PLAN INDICATES STUD RAIL, SEE SCHEDULE THIS SHEET.

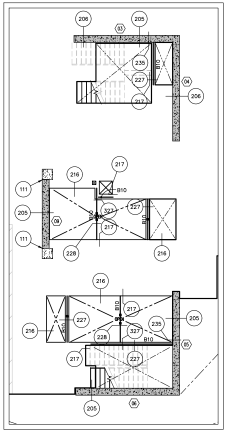
206
205
03
04
235
227
217
216
111
09
B10
327
228
OPEN
05
06

A ELEVATOR SHAFT PLAN

CONCRETE SLAB NOTE

13–112

CONCRETE POST–TENSIONED SLAB THICKNESS BY LEVEL:
L1–L4 = 10" THICK (f'c=6 ksi AT 56 DAYS)
L5–L19 = 8" THICK (f'c=6 ksi AT 56 DAYS)
LR = 12" THICK (f'c=6 ksi AT 56 DAYS)

SECOND FLOOR FRAMING PLAN

SCALE: 1/8" = 1'-0"

FINAL FOR CONSTRUCTION – 05/18/15

THESE DRAWINGS/CALCULATIONS ARE CONSIDERED PRELIMINARY –NOT FOR CONSTRUCTION OR RECORDING UNLESS THE STRUCTURAL ENGINEER OF RECORD'S SEAL IS AFFIXED WITH WRITTEN SIGNATURE.

AWBREY
COOK
MCGILL
architects
1045 14th Street, Suite 100
San Diego, CA 92101-5701
Phone: 619 . 398 . 3480

ARCHITECTS:
THOMAS B. AWBREY C 17578
CLIFFORD W. COOK C 19705
SCOT W. McGILL C 21059

42194
BRADY K.
NOTBOHM
5/14/15
EXPIRES 03-31-17

Copyright © 2014
AWBREY COOK MCGILL ARCHITECTS
All ideas, designs, and arrangements indicated on these drawings are the property of AWBREY COOK MCGILL ARCHITECTS and are intended to be used in connection with this specific project only and shall not otherwise be used for any purpose whatsoever without the written consent of the architects. There shall be no changes or deviations from these drawings or the accompanying specifications without the written consent of the architects.

CONSULTANTS:

CARUSO
TURLEY
SCOTT
INC.
consulting
structural
engineers
1215 W. Rio Salado Pkwy
Suite 200
Tempe, Arizona 85281
(480) 774–1700
(480) 774–1701 FAX
www.ctsaz.com

ENGINEER: TRM/BKN – JOB NUMBER: 13–112

REVISIONS:

CONSTRUCTION BID SET	03/09/2015
⚠A ADDENDUM A	02/02/2015
⚠1 INSTRUCTION BULLETIN 1	02/23/2015
⚠2 INSTRUCTION BULLETIN 2	05/11/2015

PROJECT:

MARRIOTT RESIDENCE INN
- COURTYARD @ LUHRS
A Development of - LUHRS CM, LLC
Phoenix, Arizona

DRAWN:	SMV
CHECKED:	BKN/TRM
DATE:	12/16/13
PROJECT NO.:	12–1601

SHEET TITLE:
SECOND FLOOR
FRAMING PLAN

SHEET NO.:
S1.2

AWBREY . COOK . McGILL . ARCHITECTS 1045 14th Street Suite 100, San Diego, California 92101.5701 Telephone 619.398.3480 Fax. 619.398.3488

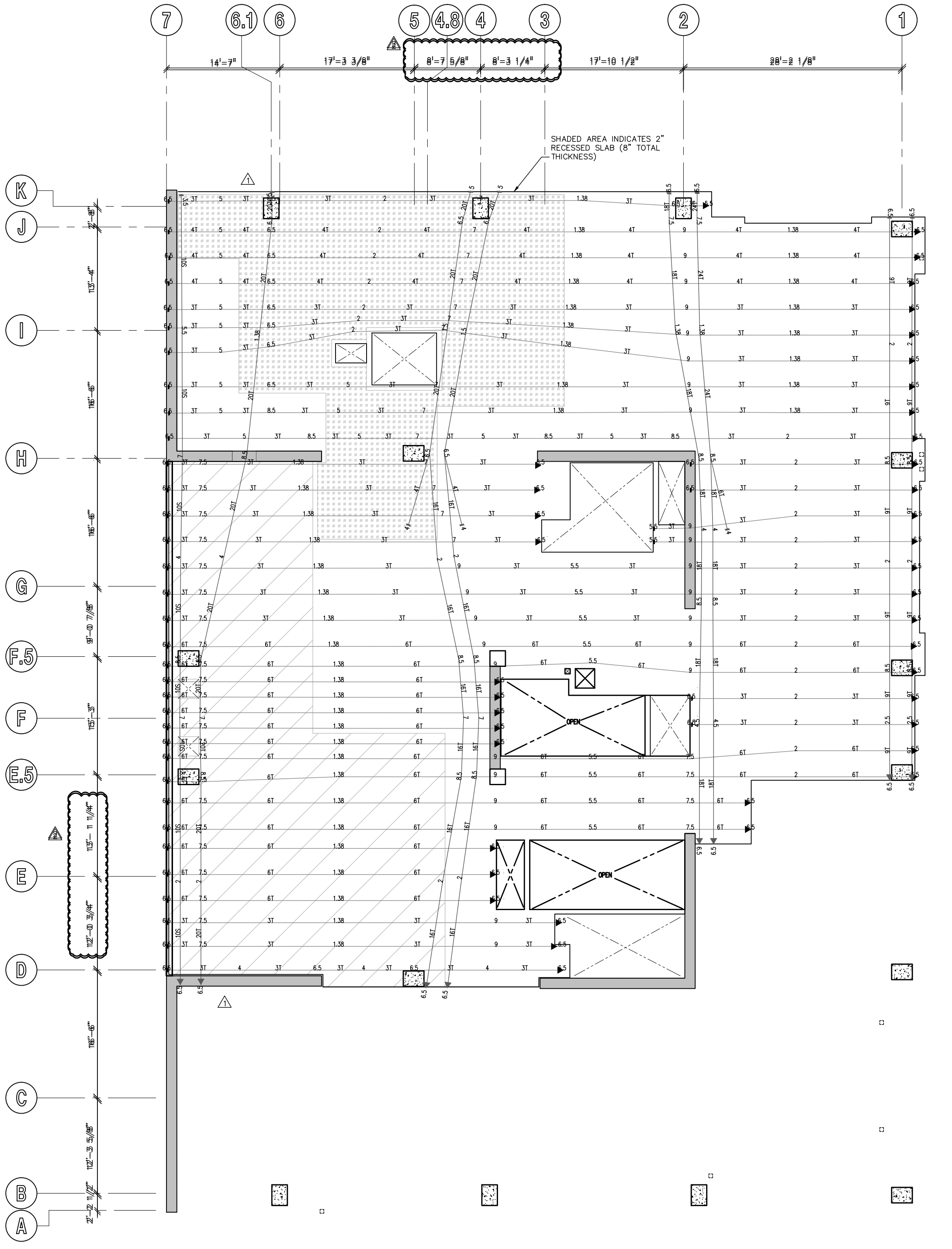

SECOND FLOOR POST-TENSION PLAN

SCALE: 1/8" = 1'-0"

POST TENSION AND SLAB REINFORCING DESIGNATION

931-31

POST TENSION LINE LEGEND

4T ◄────┤ DENOTES SINGLE PULL BANDED TENDONS.

4T ◄────► 4T DENOTES DOUBLE PULL BANDED TENDONS.

INDICATED NUMBER OF 1/2" DIA TENDONS FOR EFFECTIVE FORCE, SEE BELOW.

NOTE:
DIMENSIONS SHOWN ON PLAN INDICATE "DRAPE" OF TENDON FROM BOTTOM OF SLAB. INSTALL WITH 1" MIN CLEARANCE AT HIGH/LOW POSITIONING U.N.O.

EFFECTIVE FORCES:

1T = 26.8 kip, 2T = 53.5 kip, 3T = 80.3 kip, 4T = 107.0 kip
5T = 133.8 kip, 6T = 160.5 kip, 7T = 187.3 kip, 8T = 214.0 kip
9T = 245.8 kip, 10T = 267.5 kip, 11T = 294.3 kip, 12T = 321.0 kip
13T = 347.8 kip, 14T = 374.5 kip, 15T = 401.3 kip, 16T = 428.0 kip

MILD STEEL LINE LEGEND

12#5x16@6BM(EW)

- TOTAL NUMBER OF BARS. IF NUMBER IS NOT DESIGNATED, REINFORCING IS CONTINUOUS IN DIRECTION SHOWN.
- REINFORCING BAR SIZE.
- LENGTH (FEET). IF LENGTH IS NOT DESIGNATED REINFORCING IS CONTINUOUS AND LAPPED OVER LINE OF SUPPORT. LENGTH DOES NOT INCLUDE STANDARD HOOK AT END OF BAR.
- TYPICAL EACH WAY.
- TM=TOPMOST, T=TOP, C= CENTERED, B= BOTTOM BM = BOTTOMMOST. WHERE TWO LAYERS OF REINFORCING OCCUR IN SAME POSITION THE BOTTOMMOST OR TOPMOST LAYER SHALL BE FORMED WITH REINFORCING THAT HAS THE LARGEST AREA. REINFORCING SUPPORTING CANTILEVER CONDITION IS ALWAYS TOPMOST LAYER.
- REINFORCING SPACING (INCHES).

FOR ADDITIONAL INFORMATION, SEE G.S.N.. TYPICAL DETAILS, PLAN AND DETAILS.

EXTENT OF REINFORCING

12#5x16@6BM

SINGLE ARROW DENOTES EXTENT OF REINFORCING. DOUBLE ARROW DENOTES REINFORCING IS CONTINUOUS TO EDGE OR UNLESS NOTED OTHERWISE.

NOTE: SEE G.S.N., TYPICAL DETAILS AND PLAN FOR ADDITIONAL INFORMATION.

CONCRETE SLAB NOTE

13-112

CONCRETE POST-TENSIONED SLAB THICKNESS BY LEVEL:

L1-L4 = 10" THICK (f'c=6 ksi AT 56 DAYS)
L5-L19 = 8" THICK (f'c=6 ksi AT 56 DAYS)
LR = 12" THICK (f'c=6 ksi AT 56 DAYS)

FINAL FOR CONSTRUCTION - 05/18/15

THESE DRAWINGS/CALCULATIONS ARE CONSIDERED PRELIMINARY –NOT FOR CONSTRUCTION OR RECORDING UNLESS THE STRUCTURAL ENGINEER OF RECORD'S SEAL IS AFFIXED WITH WRITTEN SIGNATURE.

AWBREY
COOK
MCGILL
architects
1045 14th Street, Suite 100
San Diego, CA 92101-5701
Phone: 619 . 398 . 3480

ARCHITECTS:

THOMAS B. AWBREY	C 17578
CLIFFORD W. COOK	C 19705
SCOT W. McGILL	C 21059

42194
BRADY K.
NOTBOHM
5/14/15
EXPIRES 03-31-17

Copyright © 2014
AWBREY COOK MCGILL ARCHITECTS
All ideas, designs, and arrangements indicated on these drawings are the property of AWBREY COOK MCGILL ARCHITECTS and are intended to be used in connection with this specific project only and shall not otherwise be used for any purpose whatsoever without the written consent of the architects. There shall be no changes or deviations from these drawings or the accompanying specifications without the written consent of the architects.

CONSULTANTS:

CARUSO
TURLEY
SCOTT
INC.
consulting
structural
engineers
1215 W. Rio Salado Pkwy
Suite 200
Tempe, Arizona 85281
(480) 774-1700
(480) 774-1701 FAX
www.ctsaz.com

ENGINEER: TRM/BKN – JOB NUMBER: 13-112

REVISIONS:

CONSTRUCTION BID SET	03/09/2015
△A ADDENDUM A	02/02/2015
△1 INSTRUCTION BULLETIN 1	02/23/2015
△2 INSTRUCTION BULLETIN 2	05/11/2015

PROJECT:

COURTYARD
Residence Inn

MARRIOTT RESIDENCE INN
- COURTYARD @ LUHRS
A Development of - LUHRS CM, LLC
Phoenix, Arizona

DRAWN:	SMV
CHECKED:	BKN/TRM
DATE:	12/16/13
PROJECT NO.:	12-1601

SHEET TITLE:
SECOND FLOOR
POST-TENSION PLAN

SHEET NO.:
S1.2A

AWBREY . COOK . McGILL . ARCHITECTS 1045 14th Street Suite 100, San Diego, California 92101.5701 Telephone 619.398.3480 Fax. 619.398.3488

STUD RAIL (SR) SCHEDULE (L1 – L4)

13–112

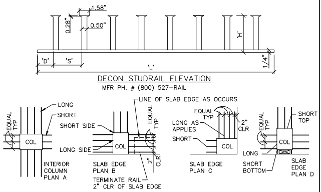

DECON STUDRAIL ELEVATION
MFR PH. # (800) 527–RAIL

NOTE:
1. LOCATE END OF STUD RAILS AT FACE OF COLUMN.
2. INSTALL WITH TOP AND BOTTOM CLEARANCE TO SLAB PER G.S.N.
3. INSTALL TYPICAL RAIL PER SCHEDULE BELOW. TERMINATE RAIL AS REQUIRED AT SLAB EDGE.

STUD RAILS

MARK	# STUDS PER RAIL	LENGTH 'L'	HEIGHT 'H'	SPACING 'S'	DISTANCE 'D'	RAILS PER COLUMN
SR1	SHORT 3 LONG 6	SHORT 16 3/4" LONG 37 3/4"	8 1/2"	5 3/4"	3 1/8"	3 SHORT SIDE 3 LONG SIDE (12 TOTAL PER D)
SR2	EDGE 5 7	EDGE 20 5/8" 27 5/8"	8 1/2"	3 1/2"	3 1/8"	3 SHORT SIDE 3 LONG SIDE (9 TOTAL PER B)
SR3	8	37 3/4"	8 1/2"	4 1/2"	3 1/8"	3 SHORT SIDE–3 LONG SIDE (9 TOTAL PER B)
SR4	12	45"	8 1/2"	3 1/2"	3 1/8"	3 SHORT SIDE–3 LONG SIDE (9 TOTAL PER B)
SR5	SHORT 20 LONG 20	SHORT 47 1/4" LONG 47 1/4"	8 1/2"	2 1/4"	2 1/4"	3 SHORT SIDE 3 LONG SIDE (12 TOTAL PER D)
SR5A	21	124 1/2"	8 1/2"	5 7/8"	3 1/8"	3 SHORT SIDE 3 LONG SIDE (11 TOTAL – SIM TO D)
SR6	EDGE 3 5	EDGE 17 3/4" 29 1/4"	8 1/2"	5 3/4"	3 1/8"	3 SHORT SIDE 3 LONG SIDE (12 TOTAL PER D)
SR7	6	35"	8 1/2"	5 3/4"	3 1/8"	3 EACH SIDE (12 TOTAL PER A)
SR8	17	45"	6 1/2"	2 1/2"	2 1/4"	3 SHORT SIDE–4 LONG SIDE (14 TOTAL PER D)
SR9	23	54"	8 1/2"	2 1/4"	2 1/4"	3 EACH SIDE (12 TOTAL PER D)
SR9A	17	40 1/2	8 1/2"	2 1/4"	2 1/4"	4 SHORT SIDE 4 LONG SIDE (16 TOTAL SIM PER B)
SR10	9	39 1/8"	8 1/2"	4"	3 1/8"	3 EACH SIDE (9 TOTAL PER B)
SR11	SHORT 7 LONG 7	SHORT 32" LONG 32"	6 1/2"	4 1/4"	2 1/4"	3 SHORT SIDE 4 LONG SIDE (14 TOTAL SIM PER A)
SR12	7	27 1/4"	8 1/2"	3 1/2"	3 1/8"	3 SHORT SIDE 3 LONG SIDE (9 TOTAL SIM PER B)

SEE STEEL STUD RAIL SCHEDULES (L5 – L19) & (LR)

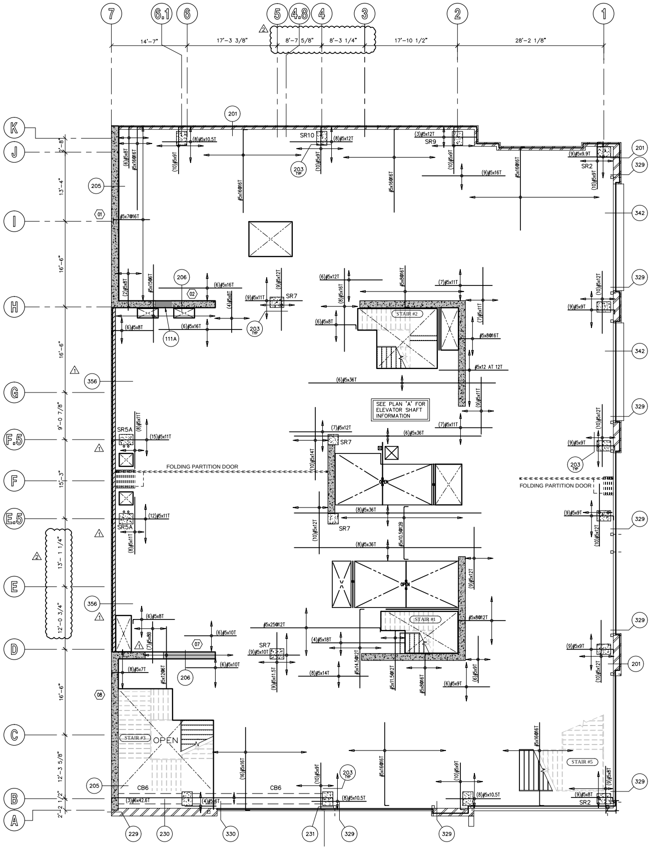

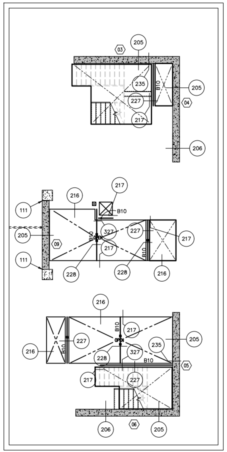

A ELEVATOR SHAFT PLAN

CONCRETE SLAB NOTE

13–112

CONCRETE POST–TENSIONED SLAB THICKNESS BY LEVEL:
L1–L4 = 10" THICK (f'c=6 ksi AT 56 DAYS)
L5–L19 = 8" THICK (f'c=6 ksi AT 56 DAYS)
LR = 12" THICK (f'c=6 ksi AT 56 DAYS)

THIRD FLOOR FRAMING PLAN

SCALE: 1/8" = 1'-0"

STEEL BEAM (B) SCHEDULE

919–02

NOTE:
1. FOR SIZE AND QUANTITY OF BOLTS, SEE TYPICAL BOLT DETAIL – U.N.O.
2. INDICATES POSITIVE BEAM CAMBER. WHERE "N/A" (NOT APPLICABLE) IS SHOWN, PROVIDE AS ROLLED CAMBER. INSTALL CROWN UP PER AISC.
3. FOR ADDITIONAL INFORMATION, SEE G.S.N., PLAN(s) AND DETAILS.

MARK	SIZE	CAMBER (SEE NOTE 2)	REMARKS
B1	W14 X 22	---	---
B2	W16 X 31	---	---
B3	W18 X 40	---	---
B4	W24 X 55	---	---
B5	W30 X 124	---	---
B6	HSS 12x6x1/4"	---	---
B7	HSS 12x10x3/8"	---	---
B8	C15 X 33.9	---	RADIUS BEAM PER ARCHITECTURAL AT B8A
B9	W8 X 31	---	---
B10	HSS 6x4x1/4"	---	---
B11	W12 X 35	---	---
B12	HSS 8x4x3/8"	---	RADIUS BEAM PER ARCHITECTURAL AT B12A

CONCRETE BEAM (CB) SCHEDULE

919–22

MARK	WIDTH	DEPTH	LONGITUDINAL REINFORCING	STIRRUPS	REMARKS
CB1	48"	38"	12 #11 TOP AND BOTTOM (2 LAYERS)	3 SETS OF #4 AT 4" O.C.	---
CB2	60"	50"	12 #11 TOP AND BOTTOM (2 LAYERS)	3 SETS OF #4 AT 16" O.C.	BALANCE OF SPAN
				3 SETS OF #4 AT 3 1/2" O.C.	0' – 9'–0" FROM GRIDS 4 to 5
CB3	64"	68"	16 #11 TOP AND BOTTOM (2 LAYERS)	3 SETS OF #4 AT 8" O.C.	0' – 14'–0" FROM GRID 7 to 6
				3 SETS OF #4 AT 16" O.C.	BALANCE OF SPAN
CB4	36"	66"	6 #9 TOP AND BOTTOM	2 SETS OF #4 AT 14" O.C.	---
CB5	48"	66"	8 #11 TOP AND BOTTOM	2 SETS OF #4 AT 14" O.C.	---
CB6	18"	24"	3 #6 TOP AND BOTTOM	#4 AT 10" O.C.	SEE DETAIL 230

PLAN NOTES – TYP U.N.O.:

1. **VERIFY ALL DIMENSIONS WITH ARCHITECTURAL DRAWINGS AND FIELD CONDITIONS. BUILDING DIMENSIONS, WHERE SHOWN, WERE PROVIDED BY THE ARCHITECT AND SHALL BE VERIFIED WITH SAME PRIOR TO PROCEEDING WITH THE WORK.**
2. SCHEDULED MARK DESIGNATIONS ARE TYPICAL TO THE PROJECT AND MAY NOT NECESSARILY BE FOUND ON THIS PLAN.
3. ▨ – AS SHOWN ON PLAN INDICATES 8" MASONRY WALL, SEE G.S.N., TYPICAL DETAILS, PLANS AND DETAILS FOR ADDITIONAL INFORMATION. ALL REINFORCING SHOWN AND/OR NOTED SHALL BE FULL HEIGHT OF WALL – TYP U.N.O.
4. ▨ – AS SHOWN ON PLAN INDICATES 600S162–54 STEEL STUD WALL. SEE PLAN FOR SIZES. STEEL STUDS SHALL BE SPACED AT 16" O.C. FOR LINTELS IN STEEL STUD WALLS, SEE DETAIL 24 – TYP U.N.O. SEE G.S.N., TYPICAL DETAILS, PLANS AND OTHER DETAILS FOR ADDITIONAL INFORMATION.
5. B1, B2, ETC – AS SHOWN ON PLAN INDICATES STEEL BEAM, SEE SCHEDULE THIS SHEET.
6. C1, C2, ETC – AS SHOWN ON PLAN INDICATES CONCRETE COLUMN, SEE SCHEDULE THIS THIS SHEET.
7. SC1, SC2, ETC – AS SHOWN ON PLAN INDICATES STEEL COLUMN, SEE SCHEDULE THIS SHEET.
8. ML1, ML2, ETC – AS SHOWN ON PLAN INDICATES MASONRY LINTEL, SEE SCHEDULE THIS SHEET, G.S.N. AND TYPICAL DETAILS.
9. W1, W2, ETC – AS SHOWN ON PLAN INDICATES CONCRETE WALL REINFORCING. SEE SCHEDULE THIS SHEET.
10. FOR MISCELLANEOUS LINTELS NOT SHOWN, SEE G.S.N. AND TYPICAL DETAILS. MASONRY CONTRACTOR SHALL COORDINATE WITH OTHER TRADES FOR EXACT SIZE AND LOCATION REQUIREMENTS.
11. MAS C.J. – AS SHOWN ON PLAN INDICATES MASONRY CONTROL JOINT IN MASONRY WALL AND/OR LINTEL, SEE G.S.N. AND TYPICAL DETAILS. JOINTS MAY BE SHOWN, BUT NOT NOTED ON THIS PLAN. SEE FOUNDATION PLAN FOR NOTED LOCATIONS.
12. CONCRETE TOPPING SHALL BE AS NOTED ON PLAN. VERIFY EXACT SIZE AND LOCATION OF DEPRESSED AND/OR RAISED SLABS WITH ARCH'L DRAWINGS. CONTROL JOINTS SHALL BE PER G.S.N. AND TYPICAL DETAILS. FOR ADDITIONAL INFORMATION, SEE G.S.N. AND DETAILS. CONTRACTOR TO VERIFY, AND BE RESPONSIBLE FOR VARIATIONS IN CONCRETE QUANTITY DUE TO CAMBER, CONSTRUCTION DEAD LOAD DEFLECTIONS, AND/OR TOLERANCES OF STRUCTURAL ELEMENTS (i.e. BEAMS, DECK, ETC.).
13. FOR CLARITY, DETAILS MAY SHOW ONLY ONE SIDE OF FRAMING CONDITIONS. ALL OPENINGS MAY NOT BE SHOWN ON THIS PLAN. FOR EXACT SIZE, NUMBER AND LOCATION OF OPENINGS, SEE ARCHITECTURAL, MECHANICAL, PLUMBING, ELECTRICAL, SPRINKLER AND THEIR RELATED DRAWINGS. FOR FRAMING AT OPENINGS, SEE TYPICAL DETAILS.
14. VERIFY EXACT SIZE, WEIGHT AND LOCATION OF EQUIPMENT AND SUPPORTS INDICATED ON PLAN WITH ARCHITECTURAL, MECHANICAL, PLUMBING, ELECTRICAL, SPRINKLER AND THEIR RELATED DRAWINGS. EQUIPMENT INDICATED ARE ONLY THOSE THAT EXCEED LOADS SPECIFIED IN THE G.S.N. FOR SUPPORT OF EQUIPMENT, SEE TYPICAL DETAILS AND OTHER TRADES.
15. CB1, CB2, ETC – AS SHOWN ON PLAN INDICATES CONCRETE BEAM, SEE SCHEDULE THIS SHEET.
16. SR1, SR2, ETC – AS SHOWN ON PLAN INDICATES STUD RAIL, SEE SCHEDULE THIS SHEET.

THESE DRAWINGS/CALCULATIONS ARE CONSIDERED PRELIMINARY –NOT FOR CONSTRUCTION OR RECORDING UNLESS THE STRUCTURAL ENGINEER OF RECORD'S SEAL IS AFFIXED WITH WRITTEN SIGNATURE.

AWBREY
COOK
MCGILL
architects
1045 14th Street, Suite 100
San Diego, CA 92101-5701
Phone: 619 . 398 . 3480

ARCHITECTS:
THOMAS B. AWBREY C 17578
CLIFFORD W. COOK C 19705
SCOT W. McGILL C 21059

42194
BRADY K.
NOTBOHM
5/14/15
EXPIRES 03-31-17

Copyright © 2014
AWBREY COOK MCGILL ARCHITECTS
All ideas, designs, and arrangements indicated on these drawings are the property of AWBREY COOK MCGILL ARCHITECTS and are intended to be used in connection with this specific project only and shall not otherwise be used for any purpose whatsoever without the written consent of the architects. There shall be no changes or deviations from these drawings or the accompanying specifications without the written consent of the architects.

CONSULTANTS:

CARUSO
TURLEY
SCOTT
INC.
consulting
structural
engineers
1215 W. Rio Salado Pkwy
Suite 200
Tempe, Arizona 85281
(480) 774–1700
(480) 774–1701 FAX
www.ctsaz.com

ENGINEER: TRM/BKN – JOB NUMBER: 13–112

REVISIONS:

CONSTRUCTION BID SET	03/09/2015
△A ADDENDUM A	02/02/2015
△1 INSTRUCTION BULLETIN 1	02/23/2015
△2 INSTRUCTION BULLETIN 2	05/11/2015

PROJECT:

MARRIOTT RESIDENCE INN
- COURTYARD @ LUHRS
A Development of - LUHRS CM, LLC
Phoenix, Arizona

DRAWN:	SMV
CHECKED:	BKN/TRM
DATE:	12/16/13
PROJECT NO.:	12–1601

SHEET TITLE:
THIRD FLOOR
FRAMING PLAN

SHEET NO.:
S1.3

AWBREY . COOK . McGILL . ARCHITECTS 1045 14th Street Suite 100, San Diego, California 92101.5701 Telephone 619.398.3480 Fax. 619.398.3488

FINAL FOR CONSTRUCTION - 05/18/15

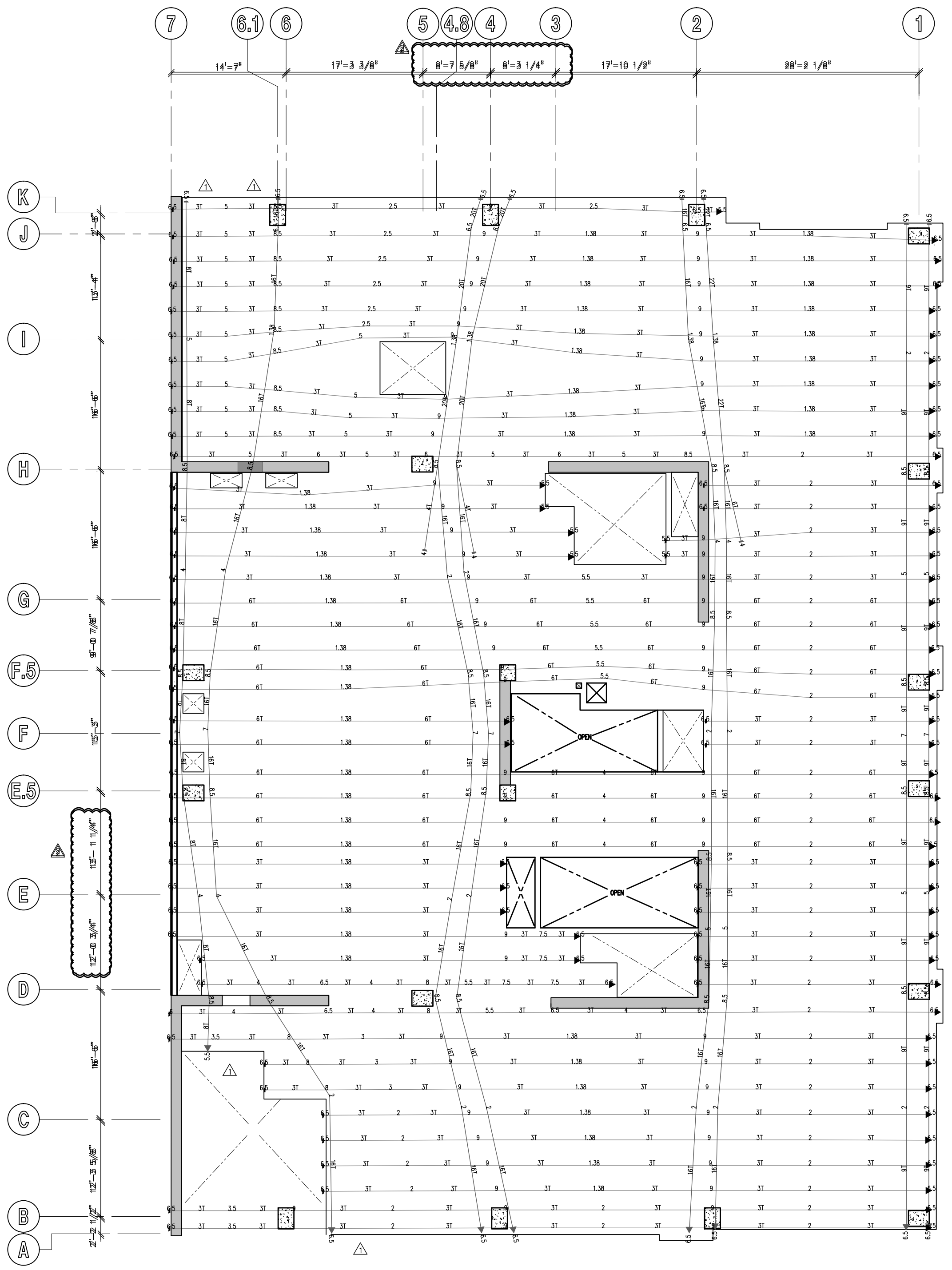

THIRD FLOOR POST-TENSION PLAN

SCALE: 1/8" = 1'-0"

POST TENSION AND SLAB REINFORCING DESIGNATION

931-31

POST TENSION LINE LEGEND

4T ◀——| DENOTES SINGLE PULL BANDED TENDONS.

4T ◀——▶ 4T DENOTES DOUBLE PULL BANDED TENDONS.

INDICATED NUMBER OF 1/2" DIA TENDONS FOR EFFECTIVE FORCE, SEE BELOW.

NOTE:
DIMENSIONS SHOWN ON PLAN INDICATE "DRAPE" OF TENDON FROM BOTTOM OF SLAB. INSTALL WITH 1" MIN CLEARANCE AT HIGH/LOW POSITIONING U.N.O.

EFFECTIVE FORCES:
1T = 26.8 kip, 2T = 53.5 kip, 3T = 80.3 kip, 4T = 107.0 kip
5T = 133.8 kip, 6T = 160.5 kip, 7T = 187.3 kip, 8T = 214.0 kip
9T = 245.8 kip, 10T = 267.5 kip, 11T = 294.3 kip, 12T = 321.0 kip
13T = 347.8 kip, 14T = 374.5 kip, 15T = 401.3 kip, 16T = 428.0 kip

MILD STEEL LINE LEGEND

12#5x16@6BM(EW)

- TOTAL NUMBER OF BARS. IF NUMBER IS NOT DESIGNATED, REINFORCING IS CONTINUOUS IN DIRECTION SHOWN.
- REINFORCING BAR SIZE.
- LENGTH (FEET). IF LENGTH IS NOT DESIGNATED REINFORCING IS CONTINUOUS AND LAPPED OVER LINE OF SUPPORT. LENGTH DOES NOT INCLUDE STANDARD HOOK AT END OF BAR.
- TYPICAL EACH WAY.
- TM=TOPMOST, T=TOP, C= CENTERED, B= BOTTOM BM = BOTTOMMOST. WHERE TWO LAYERS OF REINFORCING OCCUR IN SAME POSITION THE BOTTOMMOST OR TOPMOST LAYER SHALL BE FORMED WITH REINFORCING THAT HAS THE LARGEST AREA. REINFORCING SUPPORTING CANTILEVER CONDITION IS ALWAYS TOPMOST LAYER.
- REINFORCING SPACING (INCHES).

FOR ADDITIONAL INFORMATION, SEE G.S.N.. TYPICAL DETAILS, PLAN AND DETAILS.

EXTENT OF REINFORCING

12#5x16@6BM

SINGLE ARROW DENOTES EXTENT OF REINFORCING. DOUBLE ARROW DENOTES REINFORCING IS CONTINUOUS TO EDGE OR UNLESS NOTED OTHERWISE.

NOTE: SEE G.S.N., TYPICAL DETAILS AND PLAN FOR ADDITIONAL INFORMATION.

CONCRETE SLAB NOTE

13-112

CONCRETE POST-TENSIONED SLAB THICKNESS BY LEVEL:
L1-L4 = 10" THICK (f'c=6 ksi AT 56 DAYS)
L5-L19 = 8" THICK (f'c=6 ksi AT 56 DAYS)
LR = 12" THICK (f'c=6 ksi AT 56 DAYS)

FINAL FOR CONSTRUCTION - 05/18/15

THESE DRAWINGS/CALCULATIONS ARE CONSIDERED PRELIMINARY -NOT FOR CONSTRUCTION OR RECORDING UNLESS THE STRUCTURAL ENGINEER OF RECORD'S SEAL IS AFFIXED WITH WRITTEN SIGNATURE.

AWBREY
COOK
MCGILL
architects
1045 14th Street, Suite 100
San Diego, CA 92101-5701
Phone: 619 . 398 . 3480

ARCHITECTS:

THOMAS B. AWBREY	C 17578
CLIFFORD W. COOK	C 19705
SCOT W. McGILL	C 21059

42194
BRADY K.
NOTBOHM
5/14/15
EXPIRES 03-31-17

Copyright © 2014
AWBREY COOK MCGILL ARCHITECTS
All ideas, designs, and arrangements indicated on these drawings are the property of AWBREY COOK MCGILL ARCHITECTS and are intended to be used in connection with this specific project only and shall not otherwise be used for any purpose whatsoever without the written consent of the architects. There shall be no changes or deviations from these drawings or the accompanying specifications without the written consent of the architects.

CONSULTANTS:

CARUSO
TURLEY
SCOTT
INC.
consulting
structural
engineers
1215 W. Rio Salado Pkwy
Suite 200
Tempe, Arizona 85281
(480) 774-1700
(480) 774-1701 FAX
www.ctsaz.com

ENGINEER: TRM/BKN - JOB NUMBER: 13-112

REVISIONS:

CONSTRUCTION BID SET	03/09/2015
△A ADDENDUM A	02/02/2015
△1 INSTRUCTION BULLETIN 1	02/23/2015
△2 INSTRUCTION BULLETIN 2	05/11/2015

PROJECT:

MARRIOTT RESIDENCE INN
- COURTYARD @ LUHRS
A Development of - LUHRS CM, LLC
Phoenix, Arizona

DRAWN:	SMV
CHECKED:	BKN/TRM
DATE:	12/16/13
PROJECT NO.:	12-1601

SHEET TITLE:
THIRD FLOOR
POST-TENSION PLAN

SHEET NO.:
S1.3A

STUD RAIL (SR) SCHEDULE (L1 – L4)

13–112

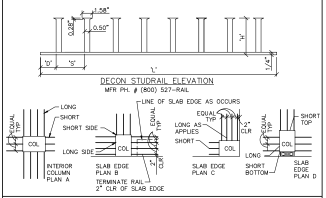
1.58"
0.28"
0.50"
'H'
'D'
'S'
'L'
1/4"
DECON STUDRAIL ELEVATION
MFR PH. # (800) 527–RAIL
LINE OF SLAB EDGE AS OCCURS
LONG
SHORT
SHORT SIDE
LONG SIDE
EQUAL TYP
COL
INTERIOR COLUMN PLAN A
SLAB EDGE PLAN B
TERMINATE RAIL 2" CLR OF SLAB EDGE
2" CLR
LONG AS APPLIES
SLAB EDGE PLAN C
SHORT TOP
SHORT BOTTOM
SLAB EDGE PLAN D

NOTE:
1. LOCATE END OF STUD RAILS AT FACE OF COLUMN.
2. INSTALL WITH TOP AND BOTTOM CLEARANCE TO SLAB PER G.S.N.
3. INSTALL TYPICAL RAIL PER SCHEDULE BELOW. TERMINATE RAIL AS REQUIRED AT SLAB EDGE.

STUD RAILS

MARK	# STUDS PER RAIL	LENGTH 'L'	HEIGHT 'H'	SPACING 'S'	DISTANCE 'D'	RAILS PER COLUMN
SR1	SHORT 3 LONG 6	SHORT 16 3/4" LONG 37 3/4"	8 1/2"	5 3/4"	3 1/8"	3 SHORT SIDE 3 LONG SIDE (12 TOTAL PER D)
SR2	EDGE 5 7	EDGE 20 5/8" 27 5/8"	8 1/2"	3 1/2"	3 1/8"	3 SHORT SIDE 3 LONG SIDE (9 TOTAL PER B)
SR3	8	37 3/4"	8 1/2"	4 1/2"	3 1/8"	3 SHORT SIDE–3 LONG SIDE (9 TOTAL PER B)
SR4	12	45"	8 1/2"	3 1/2"	3 1/8"	3 SHORT SIDE–3 LONG SIDE (9 TOTAL PER B)
SR5	SHORT 20 LONG 20	SHORT 47 1/4" LONG 47 1/4"	8 1/2"	2 1/4"	2 1/4"	3 SHORT SIDE 3 LONG SIDE (12 TOTAL PER D)
SR5A	21	124 1/2"	8 1/2"	5 7/8"	3 1/8"	3 SHORT SIDE 3 LONG SIDE (11 TOTAL – SIM TO D)
SR6	EDGE 3 5	EDGE 17 3/4" 29 1/4"	8 1/2"	5 3/4"	3 1/8"	3 SHORT SIDE 3 LONG SIDE (12 TOTAL PER D)
SR7	6	35"	8 1/2"	5 3/4"	3 1/8"	3 EACH SIDE (12 TOTAL PER A)
SR8	17	45"	6 1/2"	2 1/2"	2 1/4"	3 SHORT SIDE–4 LONG SIDE (14 TOTAL PER D)
SR9	23	54"	8 1/2"	2 1/4"	2 1/4"	3 EACH SIDE (12 TOTAL PER D)
SR9A	17	40 1/2	8 1/2"	2 1/4"	2 1/4"	4 SHORT SIDE 4 LONG SIDE (16 TOTAL SIM PER B)
SR10	9	39 1/8"	8 1/2"	4"	3 1/8"	3 EACH SIDE (9 TOTAL PER B)
SR11	SHORT 7 LONG 7	SHORT 32" LONG 32"	6 1/2"	4 1/4"	2 1/4"	3 SHORT SIDE 4 LONG SIDE (14 TOTAL SIM PER A)
SR12	7	27 1/4"	8 1/2"	3 1/2"	3 1/8"	3 SHORT SIDE 3 LONG SIDE (9 TOTAL SIM PER B)

SEE STEEL STUD RAIL SCHEDULES (L5 – L19) & (LR)

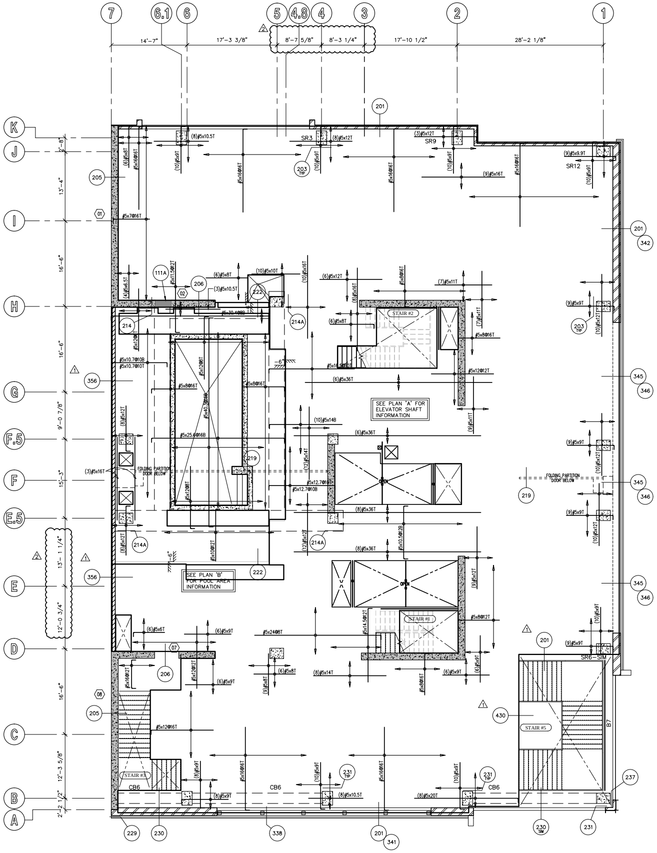
7
6.1
6
5
4.8
4
3
2
1
14'-7"
17'-3 3/8"
8'-7 5/8"
8'-3 1/4"
17'-10 1/2"
28'-2 1/8"
K
J
I
H
G
F.5
F
E.5
E
D
C
B
A
13'-4"
16'-6"
16'-6"
9'-0 7/8"
15'-3"
13'-1 1/4"
12'-0 3/4"
16'-6"
12'-3 5/8"
2'-2 1/2"
SR3
SR9
SR12
SR6—SIM
STAIR #2
STAIR #1
STAIR #3
STAIR #5
SEE PLAN "A" FOR ELEVATOR SHAFT INFORMATION
SEE PLAN "B" FOR POOL AREA INFORMATION
FOLDING PARTITION DOOR BELOW
CB6
B7
OPEN
201
205
206
214
214A
219
222
229
230
231
237
338
341
342
345
346
356
430

FOURTH FLOOR FRAMING PLAN

SCALE: 1/8" = 1'-0"

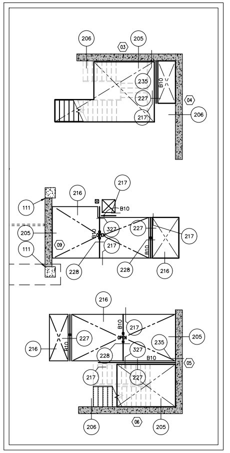
206
205
235
227
217
206
B10
111
216
217
205
327
228
208
B10
OPEN
216
216
205
217
227

A ELEVATOR SHAFT PLAN

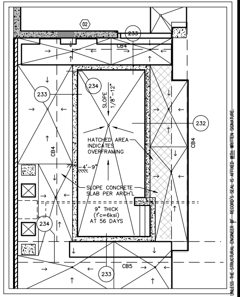
233
232
234
CB4
CB5
HATCHED AREA INDICATES OVERFRAMING
SLOPE 1/8"–12"
SLOPE CONCRETE SLAB PER ARCH'L
9" THICK (f'c=6ksi) AT 56 DAYS

B POOL FRAMING PLAN

CONCRETE SLAB NOTE

13–112

CONCRETE POST–TENSIONED SLAB THICKNESS BY LEVEL:

L1–L4 = 10" THICK (f'c=6 ksi AT 56 DAYS)
L5–L19 = 8" THICK (f'c=6 ksi AT 56 DAYS)
LR = 12" THICK (f'c=6 ksi AT 56 DAYS)

STEEL BEAM (B) SCHEDULE

919–02

NOTE:
1. FOR SIZE AND QUANTITY OF BOLTS, SEE TYPICAL BOLT DETAIL – U.N.O.
2. INDICATES POSITIVE BEAM CAMBER. WHERE "N/A" (NOT APPLICABLE) IS SHOWN, PROVIDE AS ROLLED CAMBER. INSTALL CROWN UP PER AISC.
3. FOR ADDITIONAL INFORMATION, SEE G.S.N., PLAN(s) AND DETAILS.

MARK	SIZE	CAMBER (SEE NOTE 2)	REMARKS
B1	W14 X 22	---	---
B2	W16 X 31	---	---
B3	W18 X 40	---	---
B4	W24 X 55	---	---
B5	W30 X 124	---	---
B6	HSS 12x6x1/4"	---	---
B7	HSS 12x10x3/8"	---	---
B8	C15 X 33.9	---	RADIUS BEAM PER ARCHITECTURAL AT B8A
B9	W8 X 31	---	---
B10	HSS 6x4x1/4"	---	---
B11	W12 X 35	---	---
B12	HSS 8x4x3/8"	---	RADIUS BEAM PER ARCHITECTURAL AT B12A

CONCRETE BEAM (CB) SCHEDULE

919–22

MARK	WIDTH	DEPTH	LONGITUDINAL REINFORCING	STIRRUPS	REMARKS
CB1	48"	38"	12 #11 TOP AND BOTTOM (2 LAYERS)	3 SETS OF #4 AT 4" O.C.	---
CB2	60"	50"	12 #11 TOP AND BOTTOM (2 LAYERS)	3 SETS OF #4 AT 16" O.C.	BALANCE OF SPAN
				3 SETS OF #4 AT 3 1/2" O.C.	0' – 9'–0" FROM GRIDS 4 to 5
CB3	64"	68"	16 #11 TOP AND BOTTOM (2 LAYERS)	3 SETS OF #4 AT 8" O.C.	0' – 14'–0" FROM GRID 7 to 6
				3 SETS OF #4 AT 16" O.C.	BALANCE OF SPAN
CB4	36"	66"	6 #9 TOP AND BOTTOM	2 SETS OF #4 AT 14" O.C.	---
CB5	48"	66"	8 #11 TOP AND BOTTOM	2 SETS OF #4 AT 14" O.C.	---
CB6	18"	24"	3 #6 TOP AND BOTTOM	#4 AT 10" O.C.	SEE DETAIL 230

PLAN NOTES – TYP U.N.O.:

1. **VERIFY ALL DIMENSIONS WITH ARCHITECTURAL DRAWINGS AND FIELD CONDITIONS. BUILDING DIMENSIONS, WHERE SHOWN, WERE PROVIDED BY THE ARCHITECT AND SHALL BE VERIFIED WITH SAME PRIOR TO PROCEEDING WITH THE WORK.**
2. SCHEDULED MARK DESIGNATIONS ARE TYPICAL TO THE PROJECT AND MAY NOT NECESSARILY BE FOUND ON THIS PLAN.
3. ▨ – AS SHOWN ON PLAN INDICATES 8" MASONRY WALL, SEE G.S.N., TYPICAL DETAILS, PLANS AND DETAILS FOR ADDITIONAL INFORMATION. ALL REINFORCING SHOWN AND/OR NOTED SHALL BE FULL HEIGHT OF WALL – TYP U.N.O.
4. ▨ – AS SHOWN ON PLAN INDICATES 600S162–54 STEEL STUD WALL. SEE PLAN FOR SIZES. STEEL STUDS SHALL BE SPACED AT 16" O.C. FOR LINTELS IN STEEL STUD WALLS, SEE DETAIL 24 – TYP U.N.O. SEE G.S.N., TYPICAL DETAILS, PLANS AND OTHER DETAILS FOR ADDITIONAL INFORMATION.
5. B1, B2, ETC – AS SHOWN ON PLAN INDICATES STEEL BEAM, SEE SCHEDULE THIS SHEET.
6. C1, C2, ETC – AS SHOWN ON PLAN INDICATES CONCRETE COLUMN, SEE SCHEDULE THIS THIS SHEET.
7. SC1, SC2, ETC – AS SHOWN ON PLAN INDICATES STEEL COLUMN, SEE SCHEDULE THIS SHEET.
8. ML1, ML2, ETC – AS SHOWN ON PLAN INDICATES MASONRY LINTEL, SEE SCHEDULE THIS SHEET, G.S.N. AND TYPICAL DETAILS.
9. W1, W2, ETC – AS SHOWN ON PLAN INDICATES CONCRETE WALL REINFORCING. SEE SCHEDULE THIS SHEET.
10. FOR MISCELLANEOUS LINTELS NOT SHOWN, SEE G.S.N. AND TYPICAL DETAILS. MASONRY CONTRACTOR SHALL COORDINATE WITH OTHER TRADES FOR EXACT SIZE AND LOCATION REQUIREMENTS.
11. MAS C.J. – AS SHOWN ON PLAN INDICATES MASONRY CONTROL JOINT IN MASONRY WALL AND/OR LINTEL, SEE G.S.N. AND TYPICAL DETAILS. JOINTS MAY BE SHOWN, BUT NOT NOTED ON THIS PLAN. SEE FOUNDATION PLAN FOR NOTED LOCATIONS.
12. CONCRETE TOPPING SHALL BE AS NOTED ON PLAN. VERIFY EXACT SIZE AND LOCATION OF DEPRESSED AND/OR RAISED SLABS WITH ARCH'L DRAWINGS. CONTROL JOINTS SHALL BE PER G.S.N. AND TYPICAL DETAILS. FOR ADDITIONAL INFORMATION, SEE G.S.N. AND DETAILS. CONTRACTOR TO VERIFY, AND BE RESPONSIBLE FOR VARIATIONS IN CONCRETE QUANTITY DUE TO CAMBER, CONSTRUCTION DEAD LOAD DEFLECTIONS, AND/OR TOLERANCES OF STRUCTURAL ELEMENTS (i.e. BEAMS, DECK, ETC.).
13. FOR CLARITY, DETAILS MAY SHOW ONLY ONE SIDE OF FRAMING CONDITIONS. ALL OPENINGS MAY NOT BE SHOWN ON THIS PLAN. FOR EXACT SIZE, NUMBER AND LOCATION OF OPENINGS, SEE ARCHITECTURAL, MECHANICAL, PLUMBING, ELECTRICAL, SPRINKLER AND THEIR RELATED DRAWINGS. FOR FRAMING AT OPENINGS, SEE TYPICAL DETAILS.
14. VERIFY EXACT SIZE, WEIGHT AND LOCATION OF EQUIPMENT AND SUPPORTS INDICATED ON PLAN WITH ARCHITECTURAL, MECHANICAL, PLUMBING, ELECTRICAL, SPRINKLER AND THEIR RELATED DRAWINGS. EQUIPMENT INDICATED ARE ONLY THOSE THAT EXCEED LOADS SPECIFIED IN THE G.S.N. FOR SUPPORT OF EQUIPMENT, SEE TYPICAL DETAILS AND OTHER TRADES.
15. CB1, CB2, ETC – AS SHOWN ON PLAN INDICATES CONCRETE BEAM, SEE SCHEDULE THIS SHEET.
16. SR1, SR2, ETC – AS SHOWN ON PLAN INDICATES STUD RAIL, SEE SCHEDULE THIS SHEET.

THESE DRAWINGS/CALCULATIONS ARE CONSIDERED PRELIMINARY –NOT FOR CONSTRUCTION OR RECORDING UNLESS THE STRUCTURAL ENGINEER OF RECORD'S SEAL IS AFFIXED WITH WRITTEN SIGNATURE.

AWBREY
COOK
MCGILL
architects
1045 14th Street, Suite 100
San Diego, CA 92101-5701
Phone: 619 . 398 . 3480

ARCHITECTS:

THOMAS B. AWBREY	C 17578
CLIFFORD W. COOK	C 19705
SCOT W. McGILL	C 21059

Registered Professional Engineer (Structural)
CERTIFICATE NO. 42194
BRADY K. NOTBOHM
Date Signed 5/14/15
ARIZONA, U.S.A.
EXPIRES 03-31-17

Copyright © 2014
AWBREY COOK MCGILL ARCHITECTS
All ideas, designs, and arrangements indicated on these drawings are the property of AWBREY COOK MCGILL ARCHITECTS and are intended to be used in connection with this specific project only and shall not otherwise be used for any purpose whatsoever without the written consent of the architects. There shall be no changes or deviations from these drawings or the accompanying specifications without the written consent of the architects.

CONSULTANTS:

CARUSO
TURLEY
SCOTT
INC.
consulting
structural
engineers
1215 W. Rio Salado Pkwy
Suite 200
Tempe, Arizona 85281
(480) 774–1700
(480) 774–1701 FAX
www.ctsaz.com

ENGINEER: TRM/BKN – JOB NUMBER: 13–112

REVISIONS:

CONSTRUCTION BID SET	03/09/2015
A ADDENDUM A	02/02/2015
1 INSTRUCTION BULLETIN 1	02/23/2015
2 INSTRUCTION BULLETIN 2	05/11/2015

PROJECT:

MARRIOTT RESIDENCE INN
- COURTYARD @ LUHRS
A Development of - LUHRS CM, LLC
Phoenix, Arizona

DRAWN:	SMV
CHECKED:	BKN/TRM
DATE:	12/16/13
PROJECT NO.:	12–1601

SHEET TITLE:
FOURTH FLOOR
FRAMING PLAN

SHEET NO.:
S1.4

AWBREY . COOK . McGILL . ARCHITECTS 1045 14th Street Suite 100, San Diego, California 92101.5701 Telephone 619.398.3480 Fax. 619.398.3488

FINAL FOR CONSTRUCTION - 05/18/15

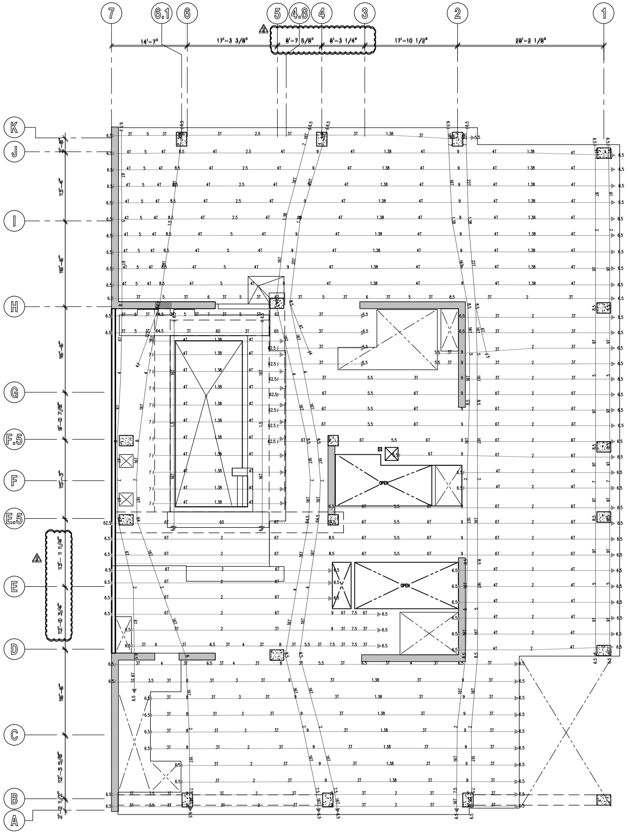

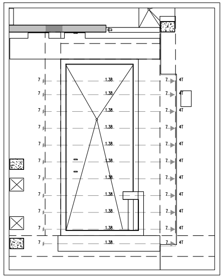

POOL POST TENSION PLAN

FOURTH FLOOR POST-TENSION PLAN

SCALE: 1/8" = 1'-0"

POST TENSION AND SLAB REINFORCING DESIGNATION

931-31

POST TENSION LINE LEGEND

4T ◄━━━━┫ DENOTES SINGLE PULL BANDED TENDONS.

4T ◄━━━━► 4T DENOTES DOUBLE PULL BANDED TENDONS.

INDICATED NUMBER OF 1/2" DIA TENDONS FOR EFFECTIVE FORCE, SEE BELOW.

NOTE:
DIMENSIONS SHOWN ON PLAN INDICATE "DRAPE" OF TENDON FROM BOTTOM OF SLAB. INSTALL WITH 1" MIN CLEARANCE AT HIGH/LOW POSITIONING U.N.O.

EFFECTIVE FORCES:

1T = 26.8 kip, 2T = 53.5 kip, 3T = 80.3 kip, 4T = 107.0 kip
5T = 133.8 kip, 6T = 160.5 kip, 7T = 187.3 kip, 8T = 214.0 kip
9T = 245.8 kip, 10T = 267.5 kip, 11T = 294.3 kip, 12T = 321.0 kip
13T = 347.8 kip, 14T = 374.5 kip, 15T = 401.3 kip, 16T = 428.0 kip

MILD STEEL LINE LEGEND

12#5x16@6BM(EW)

- TOTAL NUMBER OF BARS. IF NUMBER IS NOT DESIGNATED, REINFORCING IS CONTINUOUS IN DIRECTION SHOWN.
- REINFORCING BAR SIZE.
- LENGTH (FEET). IF LENGTH IS NOT DESIGNATED REINFORCING IS CONTINUOUS AND LAPPED OVER LINE OF SUPPORT. LENGTH DOES NOT INCLUDE STANDARD HOOK AT END OF BAR.
- TYPICAL EACH WAY.
- TM=TOPMOST, T=TOP, C= CENTERED, B= BOTTOM BM = BOTTOMMOST. WHERE TWO LAYERS OF REINFORCING OCCUR IN SAME POSITION THE BOTTOMMOST OR TOPMOST LAYER SHALL BE FORMED WITH REINFORCING THAT HAS THE LARGEST AREA. REINFORCING SUPPORTING CANTILEVER CONDITION IS ALWAYS TOPMOST LAYER.
- REINFORCING SPACING (INCHES).

FOR ADDITIONAL INFORMATION, SEE G.S.N.. TYPICAL DETAILS, PLAN AND DETAILS.

EXTENT OF REINFORCING

12#5x16@6BM

SINGLE ARROW DENOTES EXTENT OF REINFORCING. DOUBLE ARROW DENOTES REINFORCING IS CONTINUOUS TO EDGE OR UNLESS NOTED OTHERWISE.

NOTE: SEE G.S.N., TYPICAL DETAILS AND PLAN FOR ADDITIONAL INFORMATION.

CONCRETE SLAB NOTE

13-112

CONCRETE POST-TENSIONED SLAB THICKNESS BY LEVEL:

L1-L4 = 10" THICK (f'c=6 ksi AT 56 DAYS)
L5-L19 = 8" THICK (f'c=6 ksi AT 56 DAYS)
LR = 12" THICK (f'c=6 ksi AT 56 DAYS)

FINAL FOR CONSTRUCTION - 05/18/15

AWBREY
COOK
MCGILL
architects
1045 14th Street, Suite 100
San Diego, CA 92101-5701
Phone: 619 . 398 . 3480

ARCHITECTS:
THOMAS B. AWBREY C 17578
CLIFFORD W. COOK C 19705
SCOT W. McGILL C 21059

42194
BRADY K.
NOTBOHM
5/14/15
EXPIRES 03-31-17

Copyright © 2014
AWBREY COOK MCGILL ARCHITECTS
All ideas, designs, and arrangements indicated on these drawings are the property of AWBREY COOK MCGILL ARCHITECTS and are intended to be used in connection with this specific project only and shall not otherwise be used for any purpose whatsoever without the written consent of the architects. There shall be no changes or deviations from these drawings or the accompanying specifications without the written consent of the architects.

CONSULTANTS:

CARUSO
TURLEY
SCOTT
INC.
consulting
structural
engineers
1215 W. Rio Salado Pkwy
Suite 200
Tempe, Arizona 85281
(480) 774-1700
(480) 774-1701 FAX
www.ctsaz.com

ENGINEER: TRM/BKN - JOB NUMBER: 13-112

REVISIONS:

CONSTRUCTION BID SET	03/09/2015
△2 INSTRUCTION BULLETIN 2	05/11/2015

THESE DRAWINGS/CALCULATIONS ARE CONSIDERED PRELIMINARY -NOT FOR CONSTRUCTION OR RECORDING UNLESS THE STRUCTURAL ENGINEER OF RECORD'S SEAL IS AFFIXED WITH WRITTEN SIGNATURE.

PROJECT:

MARRIOTT RESIDENCE INN
- COURTYARD @ LUHRS
A Development of - LUHRS CM, LLC
Phoenix, Arizona

DRAWN:	SMV
CHECKED:	BKN/TRM
DATE:	12/16/13
PROJECT NO.:	12-1601

SHEET TITLE:
FOURTH FLOOR
POST-TENSION PLAN

SHEET NO.:
S1.4A

AWBREY . COOK . McGILL . ARCHITECTS 1045 14th Street Suite 100, San Diego, California 92101.5701 Telephone 619.398.3480 Fax. 619.398.3488

STUD RAIL (SR) SCHEDULE (L5 – L19)

13–112

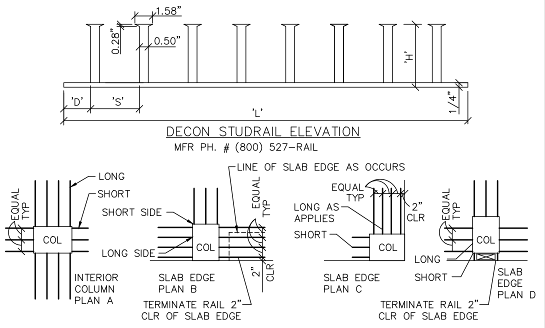

DECON STUDRAIL ELEVATION

MFR PH. # (800) 527–RAIL

NOTE:
1. LOCATE END OF STUD RAILS AT FACE OF COLUMN.
2. INSTALL WITH TOP AND BOTTOM CLEARANCE TO SLAB PER G.S.N.
3. INSTALL TYPICAL RAIL PER SCHEDULE BELOW. TERMINATE RAIL AS REQUIRED AT SLAB EDGE.

STUD RAILS

MARK	# STUDS PER RAIL	LENGTH 'L'	HEIGHT 'H'	SPACING 'S'	DISTANCE 'D'	RAILS PER COLUMN
SEE STEEL STUD RAIL SCHEDULE (L1 – L4)						
SR13	7	21 1/2"	6 1/2"	2 3/4"	2 1/4"	3 SHORT SIDE–3 LONG SIDE (9 TOTAL PER B)
SR14	7	30"	6 1/2"	4 1/4"	2 1/4"	4 SHORT SIDE–4 LONG SIDE (12 TOTAL PER B)
SR15	15	40"	6 1/2"	2 1/2"	2 1/4"	3 SHORT SIDE–4 LONG SIDE (11 TOTAL PER B)
SR16	6	25 3/4"	6 1/2"	4 1/4"	2 1/4"	3 SHORT SIDE–4 LONG SIDE (14 TOTAL PER A)
SR17	SHORT 3 LONG 5	SHORT 13" LONG 21 1/2"	6 1/2"	4 1/4"	2 1/4"	3 SHORT SIDE–4 LONG SIDE (14 TOTAL SIM PER D)
SR18	SHORT 3 LONG 7	SHORT 13" LONG 30"	6 1/2"	4 1/4"	2 1/4"	3 EACH SIDE (12 TOTAL SIM PER A)
SR19	7	30"	6 1/2"	4 1/4"	2 1/4"	3 SHORT SIDE–4 LONG SIDE (14 TOTAL PER A)
SR20	SHORT 8 LONG 20	SHORT 32 1/2" LONG 80 1/2"	6 1/2"	4"	2 1/4"	3 EACH SIDE (12 TOTAL PER D)
SR21	6	25 3/4"	6 1/2"	4 1/4"	2 1/4"	3 SHORT SIDE–4 LONG SIDE (14 TOTAL PER A)
SR22	SHORT 3 LONG 6	SHORT 13" LONG 25 3/4"	6 1/2"	4 1/4"	2 1/4"	3 EACH SIDE (12 TOTAL SIM PER A)
SR23	SHORT 2 LONG 6	SHORT 9" LONG 25 3/4"	6 1/2"	4 1/4"	2 1/4"	3 EACH SIDE (12 TOTAL SIM PER D)
SR24	SHORT 3 LONG 5	SHORT 13" LONG 21 1/2"	6 1/2"	4 1/4"	2 1/4"	3 EACH SIDE (9 TOTAL SIM PER B)
SR25	SHORT 3 LONG 4	SHORT 13" LONG 17 1/4"	6 1/2"	4 1/4"	2 1/4"	3 EACH SIDE (12 TOTAL SIM PER D)
SR26	SHORT 4 LONG 14	SHORT 12 3/4" LONG 40 1/4"	6 1/2"	2 3/4"	2 1/4"	3 EACH SIDE (12 TOTAL PER D)
SR27	SHORT 12 LONG 40	SHORT 32" LONG 102"	6 1/2"	2 1/2"	2 1/4"	4 EACH SIDE (16 TOTAL PER D)

CONCRETE COLUMN (C) SCHEDULE

CCS–1

910–32

NOTE: FOR ADDITIONAL INFORMATION, SEE G.S.N., TYPICAL DETAILS, PLANS AND OTHER DETAILS.

MARK	LEVEL	SIZE	STRENGTH (KSI)	REINFORCING		PATTERN
				VERTICAL	TIES AT 'S'	
C1	B1 – L4 L4 – L10 L10 – L19 L19 – LR	24" X 32" 24" X 24" 24" X 24" 24" X 24"	7 6 6 6	8 #11 8 #11 4 #11 8 #11	#4 AT 22" #4 AT 22" #4 AT 10"	'D' 'B' 'A' 'B'
C2	B1 – L4 L4 – L8 L8 – L9	24" X 32" 24" X 24" 24" X 24"	7 7 7	12 #11 8 #11 16 #11	#4 AT 22" #4 AT 10"	'D' 'B' 'C'
C3	B1 – L4 L4 – L5	24" X 32" 24" X 32"	7 7	12 #11 12 #11	#4 AT 22" #4 AT 12"	'E' 'E'
C4	L5 – L8 L8 – L10	24" X 24" 24" X 24"	6 6	8 #11 16 #11	#4 AT 22" #4 AT 10"	'B' 'C'
C5	L10 – L18 L19 – LR	24" X 24" 24" X 24"	6 6	4 #11 4 #11	#4 AT 22" #4 AT 10"	'A' 'A'
C6	B1 – L4 L4 – LR	24" X 32" 18" X 32"	7 6	12 #11 8 #11	#4 AT 22" #4 AT 18"	'E' 'D'
C7	B1 – L4	24" X 24"	6	8 #11	#4 AT 22"	'B'
C8	B1 – L4	16" X 36"	6	6 #9	#4 AT 18"	'F'

NOTES:

1. SLEEVED LIGHTNING PROTECTION PER G.S.N. LOCATIONS AS INDICATED ON ELECTRICAL DWGS. CENTER IN COLUMN.
2. TIES – FOR SIZE AND SPACING SEE PLAN AND SCHEDULE. ROTATE TIE SETS 90 DEGREES EACH COURSE.
3. CONCRETE COLUMN.
4. VERTICAL REINFORCING.
5. CONCRETE WALL PER PLAN.

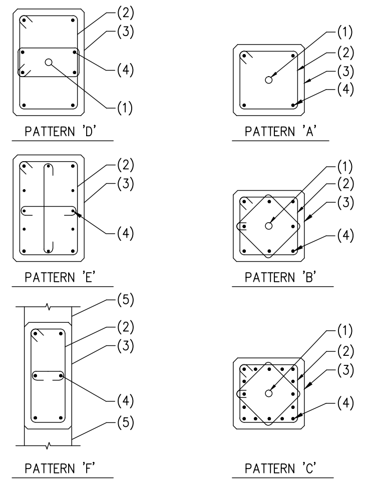

NOTES:

1. ALL COLUMN REINFORCING SPLICES WITHIN 2 LEVELS OF TOP OF COLUMN SHALL BE TENSION LAPS OR ICC APPROVED TENSION SPLICES WITH 125% Fy CAPACITY. SUBMIT MECHANICAL SPLICES FOR APPROVAL BY ENGINEER OF RECORD.
   ALL OTHER COLUMN LAP SPLICES SHALL BE COMPRESSION SPLICES.
2. SEE DETAIL 10/S0.3 FOR ADDITIONAL TIE SPACING AND LAYOUT REQUIREMENTS.
3. COLUMN LAP SPLICES SHALL BE TENSION SPLICES FULL LENGTH OF COLUMN PER DETAIL 02/S0.2.

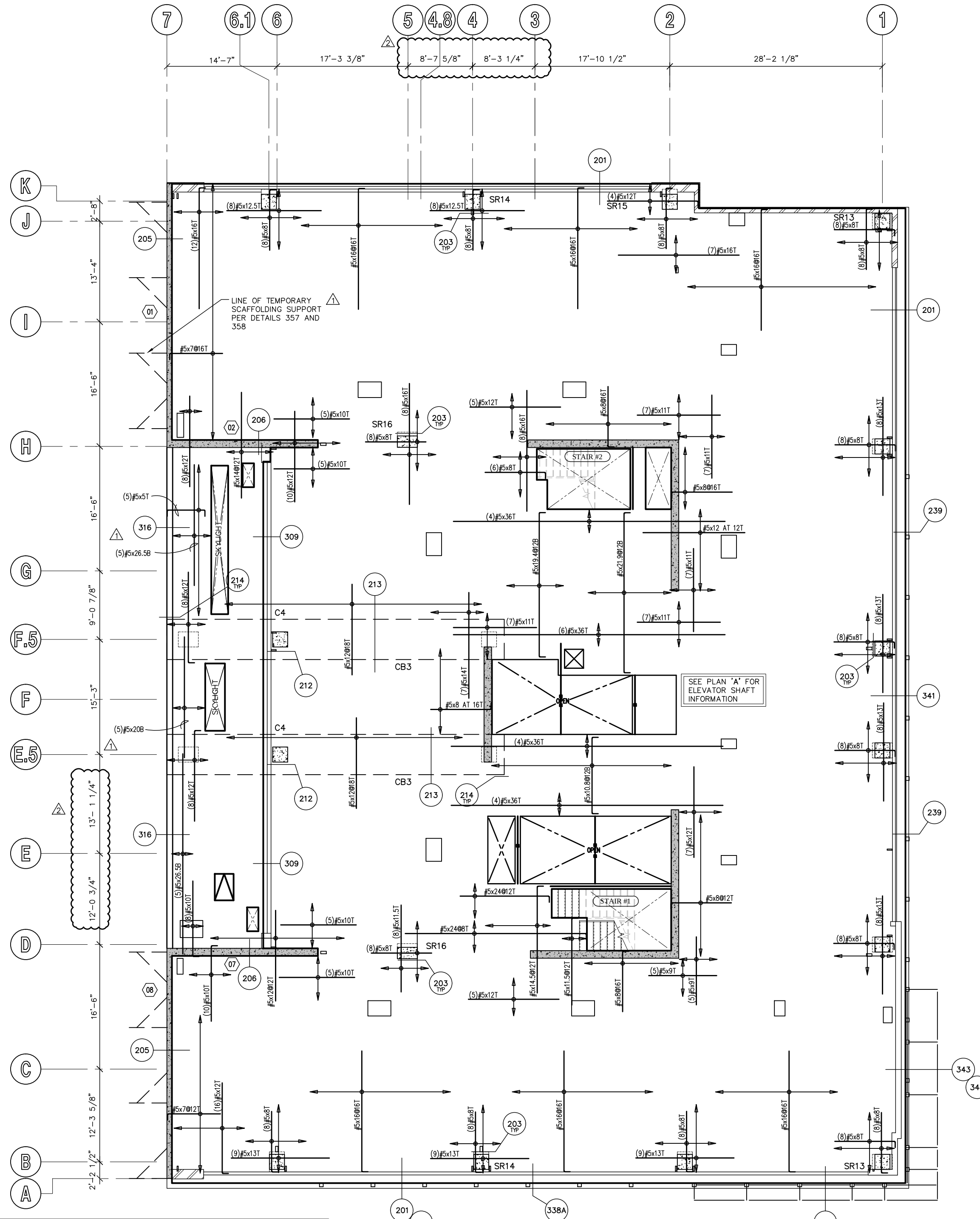

FIFTH FLOOR FRAMING PLAN

SCALE: 1/8" = 1'-0"

CONCRETE BEAM (CB) SCHEDULE

919–22

MARK	WIDTH	DEPTH	LONGITUDINAL REINFORCING	STIRRUPS	REMARKS
CB1	48"	38"	12 #11 TOP AND BOTTOM (2 LAYERS)	3 SETS OF #4 AT 4" O.C.	–––
CB2	60"	50"	12 #11 TOP AND BOTTOM (2 LAYERS)	3 SETS OF #4 AT 16" O.C. 3 SETS OF #4 AT 3 1/2" O.C.	BALANCE OF SPAN 0' – 9'–0" FROM GRIDS 4 to 5
CB3	64"	68"	16 #11 TOP AND BOTTOM (2 LAYERS)	3 SETS OF #4 AT 8" O.C. 3 SETS OF #4 AT 16" O.C.	0' – 14'–0" FROM GRID 7 to 6 BALANCE OF SPAN
CB4	36"	66"	6 #9 TOP AND BOTTOM	2 SETS OF #4 AT 14" O.C.	–––
CB5	48"	66"	8 #11 TOP AND BOTTOM	2 SETS OF #4 AT 14" O.C.	–––
CB6	18"	24"	3 #6 TOP AND BOTTOM	#4 AT 10" O.C.	SEE DETAIL 230

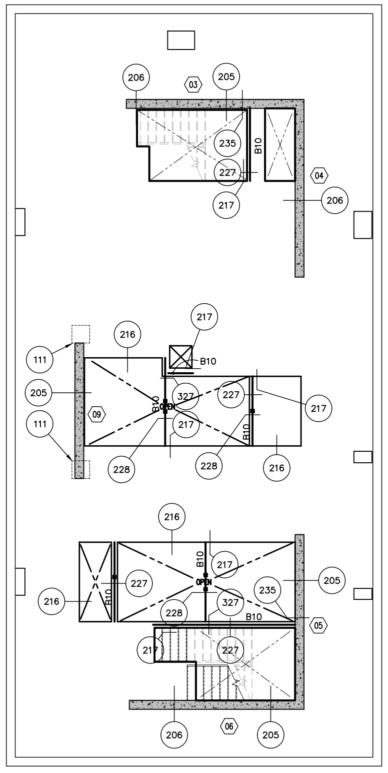

A ELEVATOR SHAFT PLAN

CONCRETE SLAB NOTE

13–112

CONCRETE POST–TENSIONED SLAB THICKNESS BY LEVEL:

L1–L4 = 10" THICK (f'c=6 ksi AT 56 DAYS)
L5–L19 = 8" THICK (f'c=6 ksi AT 56 DAYS)
LR = 12" THICK (f'c=6 ksi AT 56 DAYS)

STEEL BEAM (B) SCHEDULE

919–02

NOTE:
1. FOR SIZE AND QUANTITY OF BOLTS, SEE TYPICAL BOLT DETAIL – U.N.O.
2. INDICATES POSITIVE BEAM CAMBER. WHERE "N/A" (NOT APPLICABLE) IS SHOWN, PROVIDE AS ROLLED CAMBER. INSTALL CROWN UP PER AISC.
3. FOR ADDITIONAL INFORMATION, SEE G.S.N., PLAN(s) AND DETAILS.

MARK	SIZE	CAMBER (SEE NOTE 2)	REMARKS
B1	W14 X 22	–––	–––
B2	W16 X 31	–––	–––
B3	W18 X 40	–––	–––
B4	W24 X 55	–––	–––
B5	W30 X 124	–––	–––
B6	HSS 12x6x1/4"	–––	–––
B7	HSS 12x10x3/8"	–––	–––
B8	C15 X 33.9	–––	RADIUS BEAM PER ARCHITECTURAL AT B8A
B9	W8 X 31	–––	–––
B10	HSS 6x4x1/4"	–––	–––
B11	W12 X 35	–––	–––
B12	HSS 8x4x3/8"	–––	RADIUS BEAM PER ARCHITECTURAL AT B12A

PLAN NOTES – TYP U.N.O.:

1. **VERIFY ALL DIMENSIONS WITH ARCHITECTURAL DRAWINGS AND FIELD CONDITIONS. BUILDING DIMENSIONS, WHERE SHOWN, WERE PROVIDED BY THE ARCHITECT AND SHALL BE VERIFIED WITH SAME PRIOR TO PROCEEDING WITH THE WORK.**
2. SCHEDULED MARK DESIGNATIONS ARE TYPICAL TO THE PROJECT AND MAY NOT NECESSARILY BE FOUND ON THIS PLAN.
3. ▨ – AS SHOWN ON PLAN INDICATES 8" MASONRY WALL, SEE G.S.N., TYPICAL DETAILS, PLANS AND DETAILS FOR ADDITIONAL INFORMATION. ALL REINFORCING SHOWN AND/OR NOTED SHALL BE FULL HEIGHT OF WALL – TYP U.N.O.
4. ▨ – AS SHOWN ON PLAN INDICATES 600S162–54 STEEL STUD WALL. SEE PLAN FOR SIZES. STEEL STUDS SHALL BE SPACED AT 16" O.C. FOR LINTELS IN STEEL STUD WALLS, SEE DETAIL 24 – TYP U.N.O. SEE G.S.N., TYPICAL DETAILS, PLANS AND OTHER DETAILS FOR ADDITIONAL INFORMATION.
5. B1, B2, ETC – AS SHOWN ON PLAN INDICATES STEEL BEAM, SEE SCHEDULE THIS SHEET.
6. C1, C2, ETC – AS SHOWN ON PLAN INDICATES CONCRETE COLUMN, SEE SCHEDULE THIS THIS SHEET.
7. SC1, SC2, ETC – AS SHOWN ON PLAN INDICATES STEEL COLUMN, SEE SCHEDULE THIS SHEET.
8. ML1, ML2, ETC – AS SHOWN ON PLAN INDICATES MASONRY LINTEL, SEE SCHEDULE THIS SHEET, G.S.N. AND TYPICAL DETAILS.
9. W1, W2, ETC – AS SHOWN ON PLAN INDICATES CONCRETE WALL REINFORCING. SEE SCHEDULE THIS SHEET.
10. FOR MISCELLANEOUS LINTELS NOT SHOWN, SEE G.S.N. AND TYPICAL DETAILS. MASONRY CONTRACTOR SHALL COORDINATE WITH OTHER TRADES FOR EXACT SIZE AND LOCATION REQUIREMENTS.
11. MAS C.J. – AS SHOWN ON PLAN INDICATES MASONRY CONTROL JOINT IN MASONRY WALL AND/OR LINTEL, SEE G.S.N. AND TYPICAL DETAILS. JOINTS MAY BE SHOWN, BUT NOT NOTED ON THIS PLAN. SEE FOUNDATION PLAN FOR NOTED LOCATIONS.
12. CONCRETE TOPPING SHALL BE AS NOTED ON PLAN. VERIFY EXACT SIZE AND LOCATION OF DEPRESSED AND/OR RAISED SLABS WITH ARCH'L DRAWINGS. CONTROL JOINTS SHALL BE PER G.S.N. AND TYPICAL DETAILS. FOR ADDITIONAL INFORMATION, SEE G.S.N. AND DETAILS. CONTRACTOR TO VERIFY, AND BE RESPONSIBLE FOR VARIATIONS IN CONCRETE QUANTITY DUE TO CAMBER, CONSTRUCTION DEAD LOAD DEFLECTIONS, AND/OR TOLERANCES OF STRUCTURAL ELEMENTS (i.e. BEAMS, DECK, ETC.).
13. FOR CLARITY, DETAILS MAY SHOW ONLY ONE SIDE OF FRAMING CONDITIONS. ALL OPENINGS MAY NOT BE SHOWN ON THIS PLAN. FOR EXACT SIZE, NUMBER AND LOCATION OF OPENINGS, SEE ARCHITECTURAL, MECHANICAL, PLUMBING, ELECTRICAL, SPRINKLER AND THEIR RELATED DRAWINGS. FOR FRAMING AT OPENINGS, SEE TYPICAL DETAILS.
14. VERIFY EXACT SIZE, WEIGHT AND LOCATION OF EQUIPMENT AND SUPPORTS INDICATED ON PLAN WITH ARCHITECTURAL, MECHANICAL, PLUMBING, ELECTRICAL, SPRINKLER AND THEIR RELATED DRAWINGS. EQUIPMENT INDICATED ARE ONLY THOSE THAT EXCEED LOADS SPECIFIED IN THE G.S.N. FOR SUPPORT OF EQUIPMENT, SEE TYPICAL DETAILS AND OTHER TRADES.
15. CB1, CB2, ETC – AS SHOWN ON PLAN INDICATES CONCRETE BEAM, SEE SCHEDULE THIS SHEET.
16. SR1, SR2, ETC – AS SHOWN ON PLAN INDICATES STUD RAIL, SEE SCHEDULE THIS SHEET.

FINAL FOR CONSTRUCTION - 05/18/15

AWBREY
COOK
MCGILL
architects
1045 14th Street, Suite 100
San Diego, CA 92101-5701
Phone: 619 . 398 . 3480

ARCHITECTS:

THOMAS B. AWBREY	C 17578
CLIFFORD W. COOK	C 19705
SCOT W. McGILL	C 21059

42194
BRADY K. NOTBOHM
5/14/15
EXPIRES 03-31-17

Copyright © 2014
AWBREY COOK MCGILL ARCHITECTS
All ideas, designs, and arrangements indicated on these drawings are the property of AWBREY COOK MCGILL ARCHITECTS and are intended to be used in connection with this specific project only and shall not otherwise be used for any purpose whatsoever without the written consent of the architects. There shall be no changes or deviations from these drawings or the accompanying specifications without the written consent of the architects.

CONSULTANTS:

CARUSO
TURLEY
SCOTT
INC.
consulting
structural
engineers
1215 W. Rio Salado Pkwy
Suite 200
Tempe, Arizona 85281
(480) 774–1700
(480) 774–1701 FAX
www.ctsaz.com

ENGINEER: TRM/BKN – JOB NUMBER: 13–112

REVISIONS:

CONSTRUCTION BID SET	03/09/2015
A ADDENDUM A	02/02/2015
1 INSTRUCTION BULLETIN 1	02/23/2015
2 INSTRUCTION BULLETIN 2	05/11/2015

PROJECT:

MARRIOTT RESIDENCE INN
- COURTYARD @ LUHRS
A Development of - LUHRS CM, LLC
Phoenix, Arizona

DRAWN:	SMV
CHECKED:	BKN/TRM
DATE:	12/16/13
PROJECT NO.:	12–1601

SHEET TITLE:
FIFTH FLOOR
FRAMING PLAN

SHEET NO.:
S1.5

THESE DRAWINGS/CALCULATIONS ARE CONSIDERED PRELIMINARY –NOT FOR CONSTRUCTION OR RECORDING UNLESS THE STRUCTURAL ENGINEER OF RECORD'S SEAL IS AFFIXED WITH WRITTEN SIGNATURE.

AWBREY . COOK . McGILL . ARCHITECTS 1045 14th Street Suite 100, San Diego, California 92101.5701 Telephone 619.398.3480 Fax. 619.398.3488

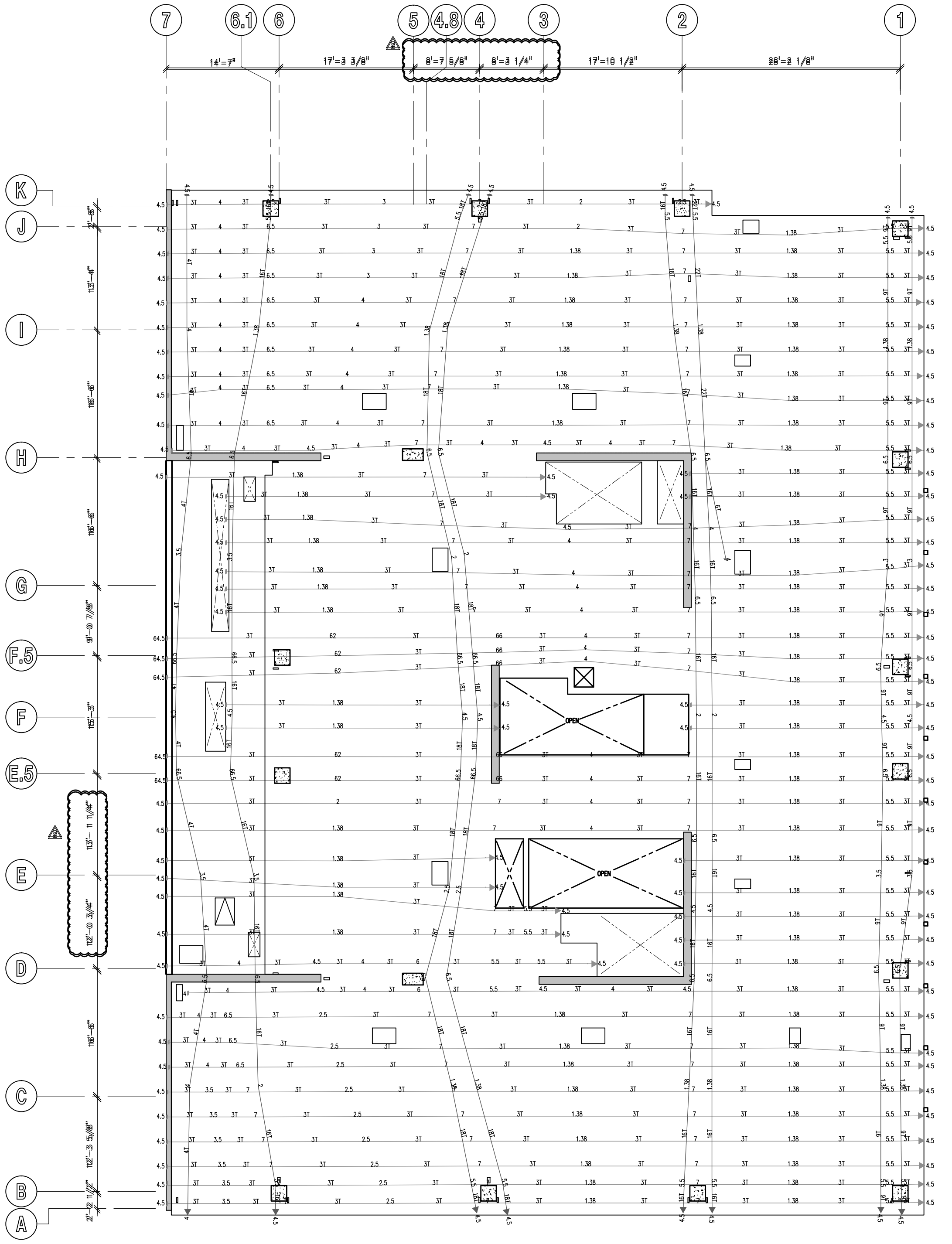

FIFTH FLOOR POST-TENSION PLAN

SCALE: 1/8" = 1'-0"

POST TENSION AND SLAB REINFORCING DESIGNATION

931-31

POST TENSION LINE LEGEND

4T ◄──────┤ DENOTES SINGLE PULL BANDED TENDONS.

4T ◄──────► 4T DENOTES DOUBLE PULL BANDED TENDONS.

INDICATED NUMBER OF 1/2" DIA TENDONS FOR EFFECTIVE FORCE, SEE BELOW.

NOTE:
DIMENSIONS SHOWN ON PLAN INDICATE "DRAPE" OF TENDON FROM BOTTOM OF SLAB. INSTALL WITH 1" MIN CLEARANCE AT HIGH/LOW POSITIONING U.N.O.

EFFECTIVE FORCES:
1T = 26.8 kip, 2T = 53.5 kip, 3T = 80.3 kip, 4T = 107.0 kip
5T = 133.8 kip, 6T = 160.5 kip, 7T = 187.3 kip, 8T = 214.0 kip
9T = 245.8 kip, 10T = 267.5 kip, 11T = 294.3 kip, 12T = 321.0 kip
13T = 347.8 kip, 14T = 374.5 kip, 15T = 401.3 kip, 16T = 428.0 kip

MILD STEEL LINE LEGEND

12#5x16@6BM(EW)

TOTAL NUMBER OF BARS. IF NUMBER IS NOT DESIGNATED, REINFORCING IS CONTINUOUS IN DIRECTION SHOWN.

REINFORCING BAR SIZE.

LENGTH (FEET). IF LENGTH IS NOT DESIGNATED REINFORCING IS CONTINUOUS AND LAPPED OVER LINE OF SUPPORT. LENGTH DOES NOT INCLUDE STANDARD HOOK AT END OF BAR.

TYPICAL EACH WAY.

TM=TOPMOST, T=TOP, C= CENTERED, B= BOTTOM BM = BOTTOMMOST.
WHERE TWO LAYERS OF REINFORCING OCCUR IN SAME POSITION THE BOTTOMMOST OR TOPMOST LAYER SHALL BE FORMED WITH REINFORCING THAT HAS THE LARGEST AREA. REINFORCING SUPPORTING CANTILEVER CONDITION IS ALWAYS TOPMOST LAYER.

REINFORCING SPACING (INCHES).

FOR ADDITIONAL INFORMATION, SEE G.S.N.. TYPICAL DETAILS, PLAN AND DETAILS.

EXTENT OF REINFORCING

12#5x16@6BM

SINGLE ARROW DENOTES EXTENT OF REINFORCING. DOUBLE ARROW DENOTES REINFORCING IS CONTINUOUS TO EDGE OR UNLESS NOTED OTHERWISE.

NOTE: SEE G.S.N., TYPICAL DETAILS AND PLAN FOR ADDITIONAL INFORMATION.

CONCRETE SLAB NOTE

13-112

CONCRETE POST-TENSIONED SLAB THICKNESS BY LEVEL:
L1-L4 = 10" THICK (f'c=6 ksi AT 56 DAYS)
L5-L19 = 8" THICK (f'c=6 ksi AT 56 DAYS)
LR = 12" THICK (f'c=6 ksi AT 56 DAYS)

AWBREY
COOK
MCGILL
a r c h i t e c t s
1045 14th Street, Suite 100
San Diego, CA 92101-5701
Phone: 619 . 398 . 3480

ARCHITECTS:

THOMAS B. AWBREY	C 17578
CLIFFORD W. COOK	C 19705
SCOT W. McGILL	C 21059

Registered Professional Engineer (Structural)
CERTIFICATE NO.
42194
BRADY K.
NOTBOHM
Date Signed 5/14/15
ARIZONA, U.S.A.
EXPIRES 03-31-17

Copyright © 2014
AWBREY COOK MCGILL ARCHITECTS
All ideas, designs, and arrangements indicated on these drawings are the property of AWBREY COOK MCGILL ARCHITECTS and are intended to be used in connection with this specific project only and shall not otherwise be used for any purpose whatsoever without the written consent of the architects. There shall be no changes or deviations from these drawings or the accompanying specifications without the written consent of the architects.

CONSULTANTS:

CARUSO
TURLEY
SCOTT
INC.
consulting
structural
engineers
1215 W. Rio Salado Pkwy
Suite 200
Tempe, Arizona 85281
(480) 774-1700
(480) 774-1701 FAX
www.ctsaz.com

ENGINEER: TRM/BKN – JOB NUMBER: 13-112

REVISIONS:

CONSTRUCTION BID SET	03/09/2015
△2 INSTRUCTION BULLETIN 2	05/11/2015

THESE DRAWINGS/CALCULATIONS ARE CONSIDERED PRELIMINARY –NOT FOR CONSTRUCTION OR RECORDING UNLESS THE STRUCTURAL ENGINEER OF RECORD'S SEAL IS AFFIXED WITH WRITTEN SIGNATURE.

PROJECT:

MARRIOTT RESIDENCE INN
- COURTYARD @ LUHRS
A Development of - LUHRS CM, LLC
Phoenix, Arizona

DRAWN:	SMV
CHECKED:	BKN/TRM
DATE:	12/16/13
PROJECT NO.:	12-1601

SHEET TITLE:
FIFTH FLOOR
POST-TENSION PLAN

SHEET NO.:
S1.5A

AWBREY . COOK . McGILL . ARCHITECTS 1045 14th Street Suite 100, San Diego, California 92101.5701 Telephone 619.398.3480 Fax. 619.398.3488

FINAL FOR CONSTRUCTION - 05/18/15

STUD RAIL (SR) SCHEDULE (L5 – L19)

13–112

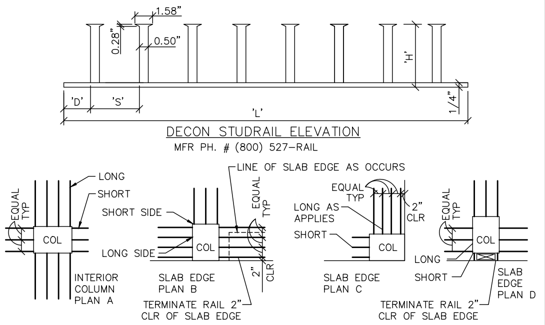

DECON STUDRAIL ELEVATION
MFR PH. # (800) 527–RAIL

NOTE:
1. LOCATE END OF STUD RAILS AT FACE OF COLUMN.
2. INSTALL WITH TOP AND BOTTOM CLEARANCE TO SLAB PER G.S.N.
3. INSTALL TYPICAL RAIL PER SCHEDULE BELOW. TERMINATE RAIL AS REQUIRED AT SLAB EDGE.

STUD RAILS

MARK	# STUDS PER RAIL	LENGTH 'L'	HEIGHT 'H'	SPACING 'S'	DISTANCE 'D'	RAILS PER COLUMN
SEE STEEL STUD RAIL SCHEDULE (L1 – L4)						
SR13	7	21 1/2"	6 1/2"	2 3/4"	2 1/4"	3 SHORT SIDE–3 LONG SIDE (9 TOTAL PER B)
SR14	7	30"	6 1/2"	4 1/4"	2 1/4"	4 SHORT SIDE–4 LONG SIDE (12 TOTAL PER B)
SR15	15	40"	6 1/2"	2 1/2"	2 1/4"	3 SHORT SIDE–4 LONG SIDE (11 TOTAL PER B)
SR16	6	25 3/4"	6 1/2"	4 1/4"	2 1/4"	3 SHORT SIDE–4 LONG SIDE (14 TOTAL PER A)
SR17	SHORT 3 LONG 5	SHORT 13" LONG 21 1/2"	6 1/2"	4 1/4"	2 1/4"	3 SHORT SIDE–4 LONG SIDE (14 TOTAL SIM PER D)
SR18	SHORT 3 LONG 7	SHORT 13" LONG 30"	6 1/2"	4 1/4"	2 1/4"	3 EACH SIDE (12 TOTAL SIM PER A)
SR19	7	30"	6 1/2"	4 1/4"	2 1/4"	3 SHORT SIDE–4 LONG SIDE (14 TOTAL PER A)
SR20	SHORT 8 LONG 20	SHORT 32 1/2" LONG 80 1/2"	6 1/2"	4"	2 1/4"	3 EACH SIDE (12 TOTAL PER D)
SR21	6	25 3/4"	6 1/2"	4 1/4"	2 1/4"	3 SHORT SIDE–4 LONG SIDE (14 TOTAL PER A)
SR22	SHORT 3 LONG 6	SHORT 13" LONG 25 3/4"	6 1/2"	4 1/4"	2 1/4"	3 EACH SIDE (12 TOTAL SIM PER A)
SR23	SHORT 2 LONG 6	SHORT 9" LONG 25 3/4"	6 1/2"	4 1/4"	2 1/4"	3 EACH SIDE (12 TOTAL SIM PER D)
SR24	SHORT 3 LONG 5	SHORT 13" LONG 21 1/2"	6 1/2"	4 1/4"	2 1/4"	3 EACH SIDE (9 TOTAL SIM PER B)
SR25	SHORT 3 LONG 4	SHORT 13" LONG 17 1/4"	6 1/2"	4 1/4"	2 1/4"	3 EACH SIDE (12 TOTAL SIM PER D)
SR26	SHORT 4 LONG 14	SHORT 12 3/4" LONG 40 1/4"	6 1/2"	2 3/4"	2 1/4"	3 EACH SIDE (12 TOTAL PER D)
SR27	SHORT 12 LONG 40	SHORT 32" LONG 102"	6 1/2"	2 1/2"	2 1/4"	4 EACH SIDE (16 TOTAL PER D)

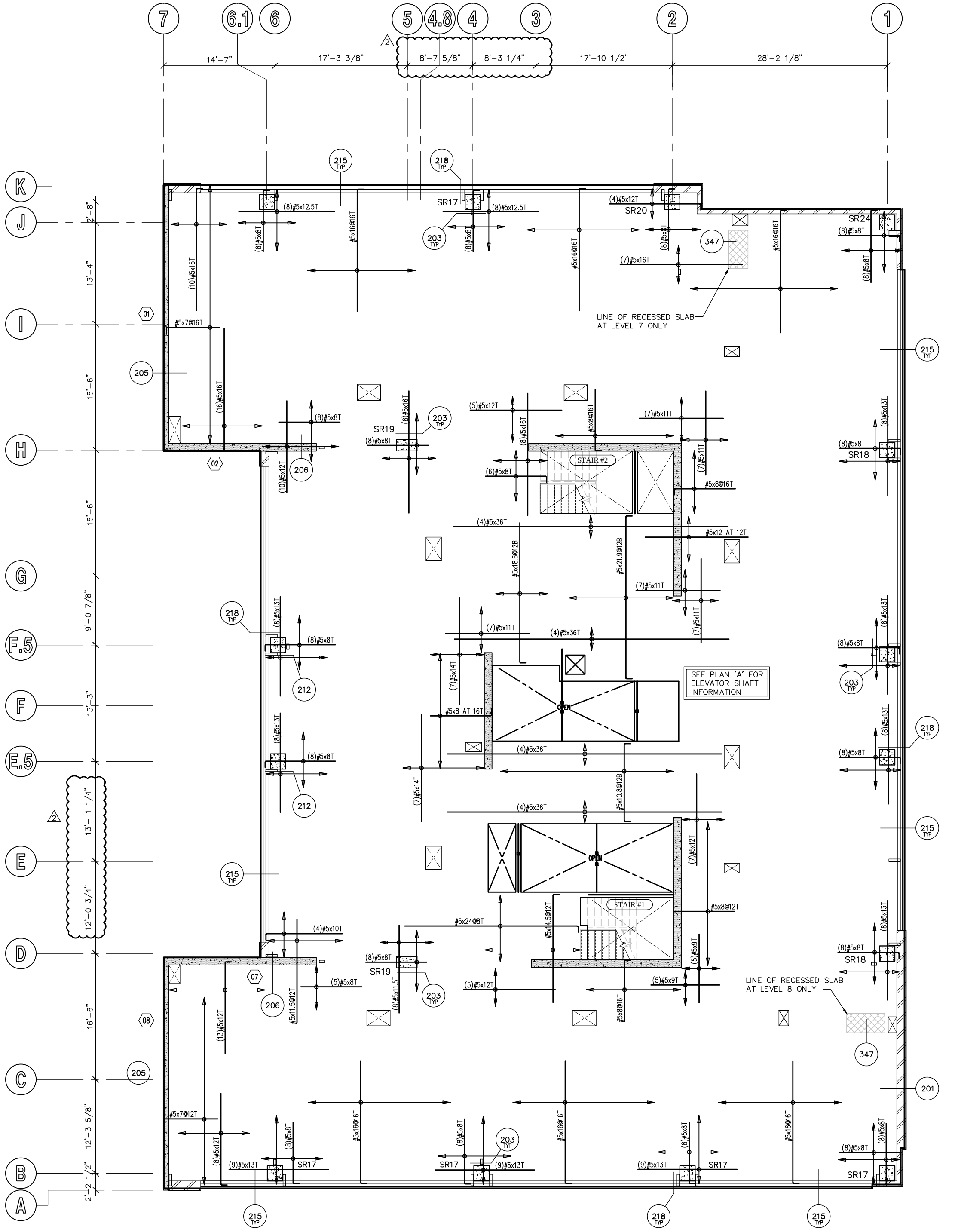

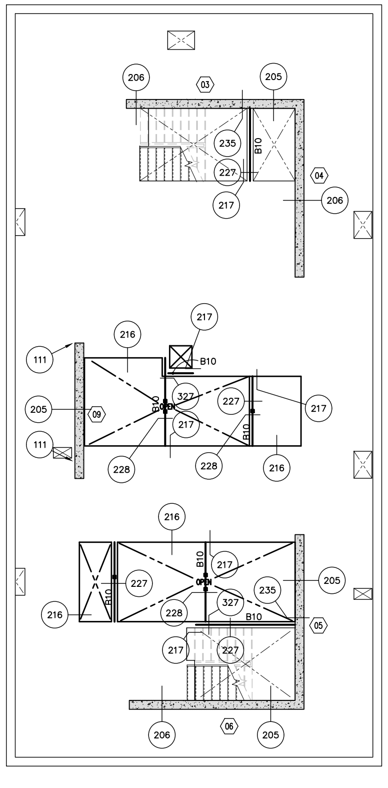

A ELEVATOR SHAFT PLAN

STEEL BEAM (B) SCHEDULE

919–02

NOTE:
1. FOR SIZE AND QUANTITY OF BOLTS, SEE TYPICAL BOLT DETAIL – U.N.O.
2. INDICATES POSITIVE BEAM CAMBER. WHERE "N/A" (NOT APPLICABLE) IS SHOWN, PROVIDE AS ROLLED CAMBER. INSTALL CROWN UP PER AISC.
3. FOR ADDITIONAL INFORMATION, SEE G.S.N., PLAN(s) AND DETAILS.

MARK	SIZE	CAMBER (SEE NOTE 2)	REMARKS
B1	W14 X 22	---	---
B2	W16 X 31	---	---
B3	W18 X 40	---	---
B4	W24 X 55	---	---
B5	W30 X 124	---	---
B6	HSS 12x6x1/4"	---	---
B7	HSS 12x10x3/8"	---	---
B8	C15 X 33.9	---	RADIUS BEAM PER ARCHITECTURAL AT B8A
B9	W8 X 31	---	---
B10	HSS 6x4x1/4"	---	---
B11	W12 X 35	---	---
B12	HSS 8x4x3/8"	---	RADIUS BEAM PER ARCHITECTURAL AT B12A

CONCRETE SLAB NOTE

13–112

CONCRETE POST–TENSIONED SLAB THICKNESS BY LEVEL:

L1–L4 = 10" THICK (f'c=6 ksi AT 56 DAYS)
L5–L19 = 8" THICK (f'c=6 ksi AT 56 DAYS)
LR = 12" THICK (f'c=6 ksi AT 56 DAYS)

SIXTH - NINTH FLOOR FRAMING PLAN

SCALE: 1/8" = 1'-0"

PLAN NOTES – TYP U.N.O.:

1. **VERIFY ALL DIMENSIONS WITH ARCHITECTURAL DRAWINGS AND FIELD CONDITIONS. BUILDING DIMENSIONS, WHERE SHOWN, WERE PROVIDED BY THE ARCHITECT AND SHALL BE VERIFIED WITH SAME PRIOR TO PROCEEDING WITH THE WORK.**
2. SCHEDULED MARK DESIGNATIONS ARE TYPICAL TO THE PROJECT AND MAY NOT NECESSARILY BE FOUND ON THIS PLAN.
3. ▨ – AS SHOWN ON PLAN INDICATES 8" MASONRY WALL, SEE G.S.N., TYPICAL DETAILS, PLANS AND DETAILS FOR ADDITIONAL INFORMATION. ALL REINFORCING SHOWN AND/OR NOTED SHALL BE FULL HEIGHT OF WALL – TYP U.N.O.
4. ▨ – AS SHOWN ON PLAN INDICATES 600S162–54 STEEL STUD WALL. SEE PLAN FOR SIZES. STEEL STUDS SHALL BE SPACED AT 16" O.C. FOR LINTELS IN STEEL STUD WALLS, SEE DETAIL 24 – TYP U.N.O. SEE G.S.N., TYPICAL DETAILS, PLANS AND OTHER DETAILS FOR ADDITIONAL INFORMATION.
5. B1, B2, ETC – AS SHOWN ON PLAN INDICATES STEEL BEAM, SEE SCHEDULE THIS SHEET.
6. C1, C2, ETC – AS SHOWN ON PLAN INDICATES CONCRETE COLUMN, SEE SCHEDULE THIS THIS SHEET.
7. SC1, SC2, ETC – AS SHOWN ON PLAN INDICATES STEEL COLUMN, SEE SCHEDULE THIS SHEET.
8. ML1, ML2, ETC – AS SHOWN ON PLAN INDICATES MASONRY LINTEL, SEE SCHEDULE THIS SHEET, G.S.N. AND TYPICAL DETAILS.
9. W1, W2, ETC – AS SHOWN ON PLAN INDICATES CONCRETE WALL REINFORCING. SEE SCHEDULE THIS SHEET.
10. FOR MISCELLANEOUS LINTELS NOT SHOWN, SEE G.S.N. AND TYPICAL DETAILS. MASONRY CONTRACTOR SHALL COORDINATE WITH OTHER TRADES FOR EXACT SIZE AND LOCATION REQUIREMENTS.
11. MAS C.J. – AS SHOWN ON PLAN INDICATES MASONRY CONTROL JOINT IN MASONRY WALL AND/OR LINTEL, SEE G.S.N. AND TYPICAL DETAILS. JOINTS MAY BE SHOWN, BUT NOT NOTED ON THIS PLAN. SEE FOUNDATION PLAN FOR NOTED LOCATIONS.
12. CONCRETE TOPPING SHALL BE AS NOTED ON PLAN. VERIFY EXACT SIZE AND LOCATION OF DEPRESSED AND/OR RAISED SLABS WITH ARCH'L DRAWINGS. CONTROL JOINTS SHALL BE PER G.S.N. AND TYPICAL DETAILS. FOR ADDITIONAL INFORMATION, SEE G.S.N. AND DETAILS. CONTRACTOR TO VERIFY, AND BE RESPONSIBLE FOR VARIATIONS IN CONCRETE QUANTITY DUE TO CAMBER, CONSTRUCTION DEAD LOAD DEFLECTIONS, AND/OR TOLERANCES OF STRUCTURAL ELEMENTS (i.e. BEAMS, DECK, ETC.).
13. FOR CLARITY, DETAILS MAY SHOW ONLY ONE SIDE OF FRAMING CONDITIONS. ALL OPENINGS MAY NOT BE SHOWN ON THIS PLAN. FOR EXACT SIZE, NUMBER AND LOCATION OF OPENINGS, SEE ARCHITECTURAL, MECHANICAL, PLUMBING, ELECTRICAL, SPRINKLER AND THEIR RELATED DRAWINGS. FOR FRAMING AT OPENINGS, SEE TYPICAL DETAILS.
14. VERIFY EXACT SIZE, WEIGHT AND LOCATION OF EQUIPMENT AND SUPPORTS INDICATED ON PLAN WITH ARCHITECTURAL, MECHANICAL, PLUMBING, ELECTRICAL, SPRINKLER AND THEIR RELATED DRAWINGS. EQUIPMENT INDICATED ARE ONLY THOSE THAT EXCEED LOADS SPECIFIED IN THE G.S.N. FOR SUPPORT OF EQUIPMENT, SEE TYPICAL DETAILS AND OTHER TRADES.
15. CB1, CB2, ETC – AS SHOWN ON PLAN INDICATES CONCRETE BEAM, SEE SCHEDULE THIS SHEET.
16. SR1, SR2, ETC – AS SHOWN ON PLAN INDICATES STUD RAIL, SEE SCHEDULE THIS SHEET.

THESE DRAWINGS/CALCULATIONS ARE CONSIDERED PRELIMINARY –NOT FOR CONSTRUCTION OR RECORDING UNLESS THE STRUCTURAL ENGINEER OF RECORD'S SEAL IS AFFIXED WITH WRITTEN SIGNATURE.

FINAL FOR CONSTRUCTION - 05/18/15

AWBREY
COOK
MCGILL
architects
1045 14th Street, Suite 100
San Diego, CA 92101-5701
Phone: 619 . 398 . 3480

ARCHITECTS:
THOMAS B. AWBREY C 17578
CLIFFORD W. COOK C 19705
SCOT W. McGILL C 21059

42194
BRADY K.
NOTBOHM
5/14/15
EXPIRES 03-31-17

Copyright © 2014
AWBREY COOK MCGILL ARCHITECTS
All ideas, designs, and arrangements indicated on these drawings are the property of AWBREY COOK MCGILL ARCHITECTS and are intended to be used in connection with this specific project only and shall not otherwise be used for any purpose whatsoever without the written consent of the architects. There shall be no changes or deviations from these drawings or the accompanying specifications without the written consent of the architects.

CONSULTANTS:

CARUSO
TURLEY
SCOTT
INC.
consulting
structural
engineers
1215 W. Rio Salado Pkwy
Suite 200
Tempe, Arizona 85281
(480) 774–1700
(480) 774–1701 FAX
www.ctsaz.com

ENGINEER: TRM/BKN – JOB NUMBER: 13–112

REVISIONS:

CONSTRUCTION BID SET	03/09/2015
⚠2 INSTRUCTION BULLETIN 2	05/11/2015

PROJECT:

MARRIOTT RESIDENCE INN
- COURTYARD @ LUHRS
A Development of - LUHRS CM, LLC
Phoenix, Arizona

DRAWN:	SMV
CHECKED:	BKN/TRM
DATE:	12/16/13
PROJECT NO.:	12–1601

SHEET TITLE:
SIXTH - NINTH FLOOR FRAMING PLAN

SHEET NO.:
S1.6

AWBREY . COOK . McGILL . ARCHITECTS 1045 14th Street Suite 100, San Diego, California 92101.5701 Telephone 619.398.3480 Fax. 619.398.3488

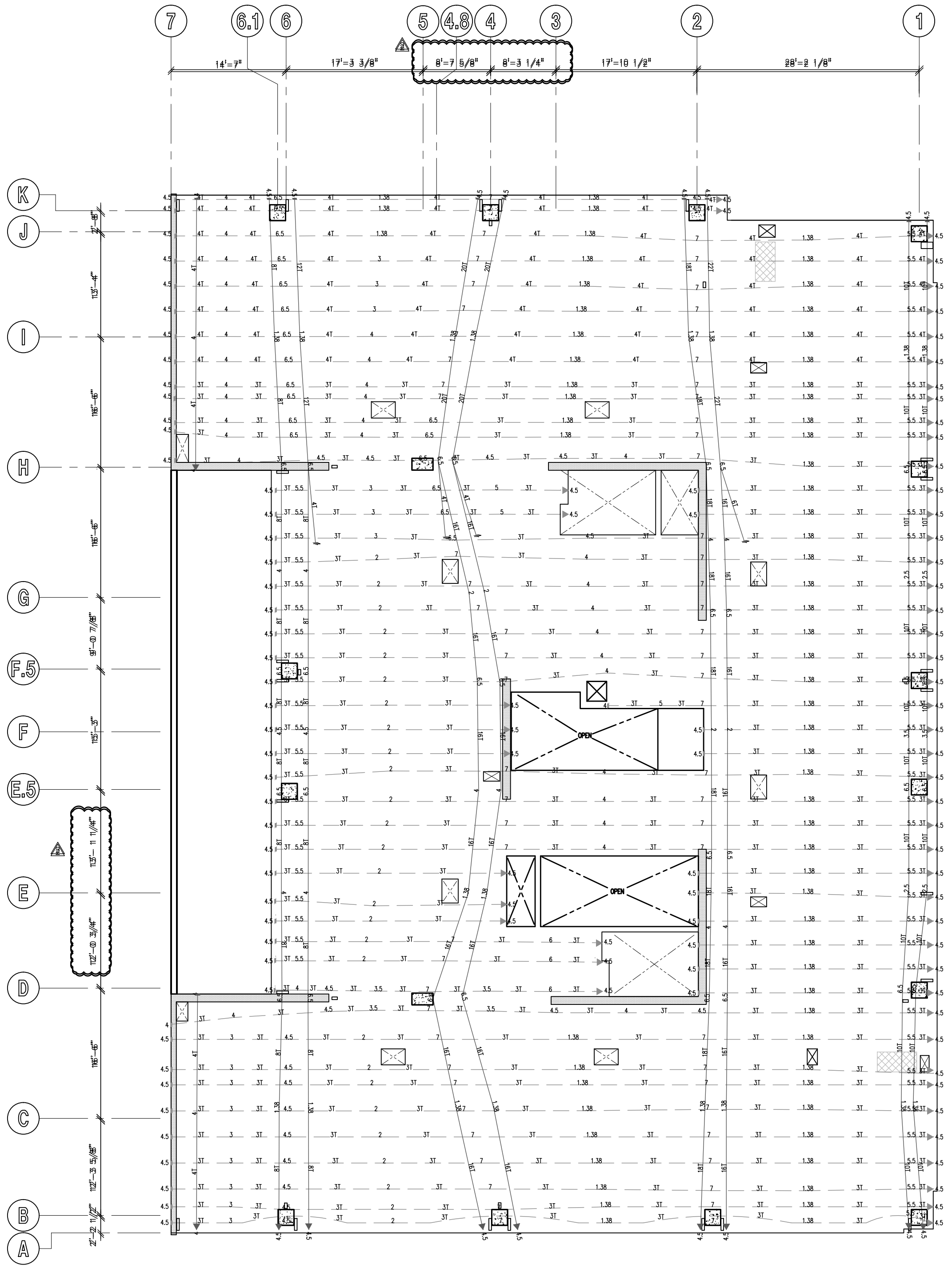

SIXTH - NINTH FLOOR POST-TENSION PLAN

SCALE: 1/8" = 1'-0"

POST TENSION AND SLAB REINFORCING DESIGNATION

931-31

POST TENSION LINE LEGEND

4T ◄──┤ DENOTES SINGLE PULL BANDED TENDONS.

4T ◄──► 4T DENOTES DOUBLE PULL BANDED TENDONS.

INDICATED NUMBER OF 1/2" DIA TENDONS FOR EFFECTIVE FORCE, SEE BELOW.

NOTE:
DIMENSIONS SHOWN ON PLAN INDICATE "DRAPE" OF TENDON FROM BOTTOM OF SLAB. INSTALL WITH 1" MIN CLEARANCE AT HIGH/LOW POSITIONING U.N.O.

EFFECTIVE FORCES:
1T = 26.8 kip, 2T = 53.5 kip, 3T = 80.3 kip, 4T = 107.0 kip
5T = 133.8 kip, 6T = 160.5 kip, 7T = 187.3 kip, 8T = 214.0 kip
9T = 245.8 kip, 10T = 267.5 kip, 11T = 294.3 kip, 12T = 321.0 kip
13T = 347.8 kip, 14T = 374.5 kip, 15T = 401.3 kip, 16T = 428.0 kip

MILD STEEL LINE LEGEND

12#5x16@6BM(EW)

12	TOTAL NUMBER OF BARS. IF NUMBER IS NOT DESIGNATED, REINFORCING IS CONTINUOUS IN DIRECTION SHOWN.
#5	REINFORCING BAR SIZE.
16	LENGTH (FEET). IF LENGTH IS NOT DESIGNATED REINFORCING IS CONTINUOUS AND LAPPED OVER LINE OF SUPPORT. LENGTH DOES NOT INCLUDE STANDARD HOOK AT END OF BAR.
(EW)	TYPICAL EACH WAY.
BM	TM=TOPMOST, T=TOP, C= CENTERED, B= BOTTOM BM = BOTTOMMOST. WHERE TWO LAYERS OF REINFORCING OCCUR IN SAME POSITION THE BOTTOMMOST OR TOPMOST LAYER SHALL BE FORMED WITH REINFORCING THAT HAS THE LARGEST AREA. REINFORCING SUPPORTING CANTILEVER CONDITION IS ALWAYS TOPMOST LAYER.
6	REINFORCING SPACING (INCHES).

FOR ADDITIONAL INFORMATION, SEE G.S.N.. TYPICAL DETAILS, PLAN AND DETAILS.

EXTENT OF REINFORCING

12#5x16@6BM

SINGLE ARROW DENOTES EXTENT OF REINFORCING. DOUBLE ARROW DENOTES REINFORCING IS CONTINUOUS TO EDGE OR UNLESS NOTED OTHERWISE.

NOTE: SEE G.S.N., TYPICAL DETAILS AND PLAN FOR ADDITIONAL INFORMATION.

CONCRETE SLAB NOTE

13-112

CONCRETE POST-TENSIONED SLAB THICKNESS BY LEVEL:

L1-L4 = 10" THICK (f'c=6 ksi AT 56 DAYS)
L5-L19 = 8" THICK (f'c=6 ksi AT 56 DAYS)
LR = 12" THICK (f'c=6 ksi AT 56 DAYS)

FINAL FOR CONSTRUCTION - 05/18/15

AWBREY
COOK
MCGILL
architects
1045 14th Street, Suite 100
San Diego, CA 92101-5701
Phone: 619 . 398 . 3480

ARCHITECTS:
THOMAS B. AWBREY C 17578
CLIFFORD W. COOK C 19705
SCOT W. McGILL C 21059

Registered Professional Engineer (Structural)
CERTIFICATE NO.
42194
BRADY K.
NOTBOHM
Date Signed 5/14/15
ARIZONA, U.S.A.
EXPIRES 03-31-17

Copyright © 2014
AWBREY COOK MCGILL ARCHITECTS
All ideas, designs, and arrangements indicated on these drawings are the property of AWBREY COOK MCGILL ARCHITECTS and are intended to be used in connection with this specific project only and shall not otherwise be used for any purpose whatsoever without the written consent of the architects. There shall be no changes or deviations from these drawings or the accompanying specifications without the written consent of the architects.

CONSULTANTS:

CARUSO
TURLEY
SCOTT
INC.
consulting
structural
engineers
1215 W. Rio Salado Pkwy
Suite 200
Tempe, Arizona 85281
(480) 774-1700
(480) 774-1701 FAX
www.ctsaz.com

ENGINEER: TRM/BKN – JOB NUMBER: 13-112

REVISIONS:

CONSTRUCTION BID SET	03/09/2015
2 INSTRUCTION BULLETIN 2	05/11/2015

THESE DRAWINGS/CALCULATIONS ARE CONSIDERED PRELIMINARY –NOT FOR CONSTRUCTION OR RECORDING UNLESS THE STRUCTURAL ENGINEER OF RECORD'S SEAL IS AFFIXED WITH WRITTEN SIGNATURE.

PROJECT:

Residence Inn Marriott
COURTYARD Marriott

MARRIOTT RESIDENCE INN
- COURTYARD @ LUHRS
A Development of - LUHRS CM, LLC
Phoenix, Arizona

DRAWN:	SMV
CHECKED:	BKN/TRM
DATE:	12/16/13
PROJECT NO.:	12-1601

SHEET TITLE:
SIXTH - NINTH FLOOR
POST-TENSION PLAN

SHEET NO.:
S1.6A

AWBREY . COOK . McGILL . ARCHITECTS 1045 14th Street Suite 100, San Diego, California 92101.5701 Telephone 619.398.3480 Fax. 619.398.3488

STUD RAIL (SR) SCHEDULE (L5 – L19)

13–112

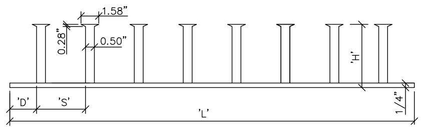

DECON STUDRAIL ELEVATION

MFR PH. # (800) 527–RAIL

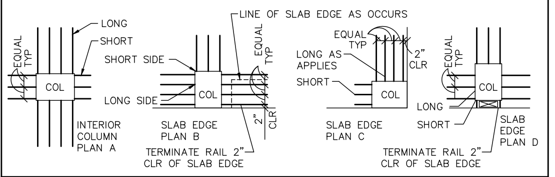

NOTE:
1. LOCATE END OF STUD RAILS AT FACE OF COLUMN.
2. INSTALL WITH TOP AND BOTTOM CLEARANCE TO SLAB PER G.S.N.
3. INSTALL TYPICAL RAIL PER SCHEDULE BELOW. TERMINATE RAIL AS REQUIRED AT SLAB EDGE.

STUD RAILS

MARK	# STUDS PER RAIL	LENGTH 'L'	HEIGHT 'H'	SPACING 'S'	DISTANCE 'D'	RAILS PER COLUMN
SEE STEEL STUD RAIL SCHEDULE (L1 – L4)						
SR13	7	21 1/2"	6 1/2"	2 3/4"	2 1/4"	3 SHORT SIDE–3 LONG SIDE (9 TOTAL PER B)
SR14	7	30"	6 1/2"	4 1/4"	2 1/4"	4 SHORT SIDE–4 LONG SIDE (12 TOTAL PER B)
SR15	15	40"	6 1/2"	2 1/2"	2 1/4"	3 SHORT SIDE–4 LONG SIDE (11 TOTAL PER B)
SR16	6	25 3/4"	6 1/2"	4 1/4"	2 1/4"	3 SHORT SIDE–4 LONG SIDE (14 TOTAL PER A)
SR17	SHORT 3 LONG 5	SHORT 13" LONG 21 1/2"	6 1/2"	4 1/4"	2 1/4"	3 SHORT SIDE–4 LONG SIDE (14 TOTAL SIM PER D)
SR18	SHORT 3 LONG 7	SHORT 13" LONG 30"	6 1/2"	4 1/4"	2 1/4"	3 EACH SIDE (12 TOTAL SIM PER A)
SR19	7	30"	6 1/2"	4 1/4"	2 1/4"	3 SHORT SIDE–4 LONG SIDE (14 TOTAL PER A)
SR20	SHORT 8 LONG 20	SHORT 32 1/2" LONG 80 1/2"	6 1/2"	4"	2 1/4"	3 EACH SIDE (12 TOTAL PER D)
SR21	6	25 3/4"	6 1/2"	4 1/4"	2 1/4"	3 SHORT SIDE–4 LONG SIDE (14 TOTAL PER A)
SR22	SHORT 3 LONG 6	SHORT 13" LONG 25 3/4"	6 1/2"	4 1/4"	2 1/4"	3 EACH SIDE (12 TOTAL SIM PER A)
SR23	SHORT 2 LONG 6	SHORT 9" LONG 25 3/4"	6 1/2"	4 1/4"	2 1/4"	3 EACH SIDE (12 TOTAL SIM PER D)
SR24	SHORT 3 LONG 5	SHORT 13" LONG 21 1/2"	6 1/2"	4 1/4"	2 1/4"	3 EACH SIDE (9 TOTAL SIM PER B)
SR25	SHORT 3 LONG 4	SHORT 13" LONG 17 1/4"	6 1/2"	4 1/4"	2 1/4"	3 EACH SIDE (12 TOTAL SIM PER D)
SR26	SHORT 4 LONG 14	SHORT 12 3/4" LONG 40 1/4"	6 1/2"	2 3/4"	2 1/4"	3 EACH SIDE (12 TOTAL PER D)
SR27	SHORT 12 LONG 40	SHORT 32" LONG 102"	6 1/2"	2 1/2"	2 1/4"	4 EACH SIDE (16 TOTAL PER D)

CONCRETE COLUMN (C) SCHEDULE

CCS–1

910–32

NOTE: FOR ADDITIONAL INFORMATION, SEE G.S.N., TYPICAL DETAILS, PLANS AND OTHER DETAILS.

MARK	LEVEL	SIZE	STRENGTH (KSI)	REINFORCING		PATTERN
				VERTICAL	TIES AT 'S'	
C1	B1 – L4 L4 – L10 L10 – L19 L19 – LR	24" X 32" 24" X 24" 24" X 24" 24" X 24"	7 6 6 6	8 #11 8 #11 4 #11 8 #11	 #4 AT 22" #4 AT 22" #4 AT 10"	'D' 'B' 'A' 'B'
C2	B1 – L4 L4 – L8 L8 – L9	24" X 32" 24" X 24" 24" X 24"	7 7 7	12 #11 8 #11 16 #11	 #4 AT 22" #4 AT 10"	'D' 'B' 'C'
C3	B1 – L4 L4 – L5	24" X 32" 24" X 32"	7 7	12 #11 12 #11	#4 AT 22" #4 AT 12"	'E' 'E'
C4	L5 – L8 L8 – L10	24" X 24" 24" X 24"	6 6	8 #11 16 #11	#4 AT 22" #4 AT 10"	'B' 'C'
C5	L10 – L18 L19 – LR	24" X 24" 24" X 24"	6 6	4 #11 4 #11	#4 AT 22" #4 AT 10"	'A' 'A'
C6	B1 – L4 L4 – LR	24" X 32" 18" X 32"	7 6	12 #11 8 #11	#4 AT 22" #4 AT 18"	'E' 'D'
C7	B1 – L4	24" X 24"	6	8 #11	#4 AT 22"	'B'
C8	B1 – L4	16" X 36"	6	6 #9	#4 AT 18"	'F'

NOTES:
1. ALL COLUMN REINFORCING SPLICES WITHIN 2 LEVELS OF TOP OF COLUMN SHALL BE TENSION LAPS OR ICC APPROVED TENSION SPLICES WITH 125% Fy CAPACITY. SUBMIT MECHANICAL SPLICES FOR APPROVAL BY ENGINEER OF RECORD.
ALL OTHER COLUMN LAP SPLICES SHALL BE COMPRESSION SPLICES.
2. SEE DETAIL 10/S0.3 FOR ADDITIONAL TIE SPACING AND LAYOUT REQUIREMENTS.
3. COLUMN LAP SPLICES SHALL BE TENSION SPLICES FULL LENGTH OF COLUMN PER DETAIL 02/S0.2.

NOTES:
1. SLEEVED LIGHTNING PROTECTION PER G.S.N. LOCATIONS AS INDICATED ON ELECTRICAL DWGS. CENTER IN COLUMN.
2. TIES – FOR SIZE AND SPACING SEE PLAN AND SCHEDULE. ROTATE TIE SETS 90 DEGREES EACH COURSE.
3. CONCRETE COLUMN.
4. VERTICAL REINFORCING.
5. CONCRETE WALL PER PLAN.

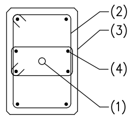

PATTERN 'D'

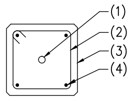

PATTERN 'A'

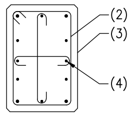

PATTERN 'E'

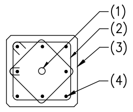

PATTERN 'B'

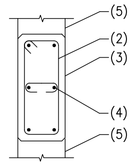

PATTERN 'F'

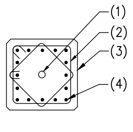

PATTERN 'C'

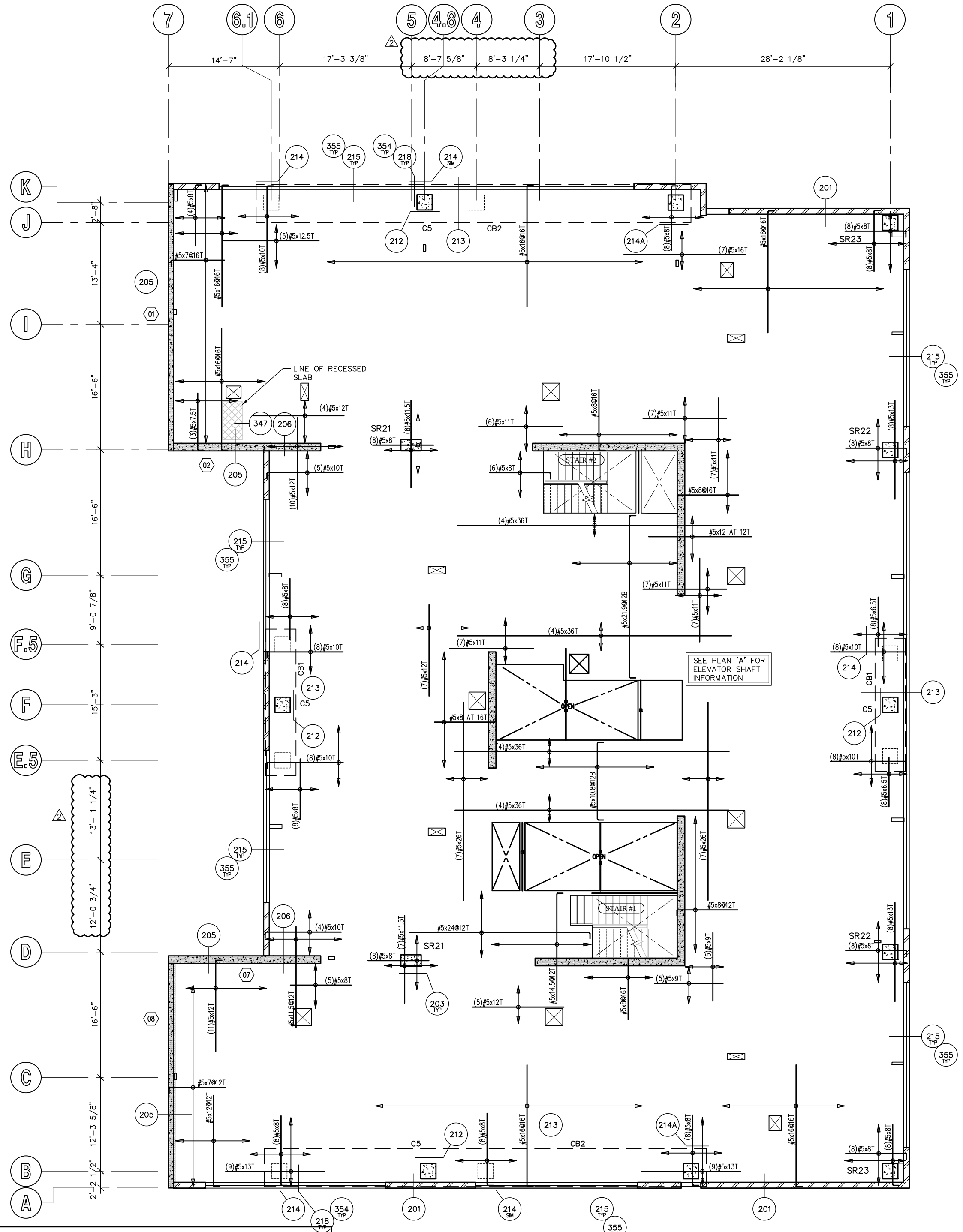

TENTH FLOOR FRAMING PLAN

SCALE: 1/8" = 1'-0"

STEEL BEAM (B) SCHEDULE

919–02

NOTE:
1. FOR SIZE AND QUANTITY OF BOLTS, SEE TYPICAL BOLT DETAIL – U.N.O.
2. INDICATES POSITIVE BEAM CAMBER. WHERE "N/A" (NOT APPLICABLE) IS SHOWN, PROVIDE AS ROLLED CAMBER. INSTALL CROWN UP PER AISC.
3. FOR ADDITIONAL INFORMATION, SEE G.S.N., PLAN(s) AND DETAILS.

MARK	SIZE	CAMBER (SEE NOTE 2)	REMARKS
B1	W14 X 22	---	---
B2	W16 X 31	---	---
B3	W18 X 40	---	---
B4	W24 X 55	---	---
B5	W30 X 124	---	---
B6	HSS 12x6x1/4"	---	---
B7	HSS 12x10x3/8"	---	---
B8	C15 X 33.9	---	RADIUS BEAM PER ARCHITECTURAL AT B8A
B9	W8 X 31	---	---
B10	HSS 6x4x1/4"	---	---
B11	W12 X 35	---	---
B12	HSS 8x4x3/8"	---	RADIUS BEAM PER ARCHITECTURAL AT B12A

PLAN NOTES – TYP U.N.O.:

1. **VERIFY ALL DIMENSIONS WITH ARCHITECTURAL DRAWINGS AND FIELD CONDITIONS. BUILDING DIMENSIONS, WHERE SHOWN, WERE PROVIDED BY THE ARCHITECT AND SHALL BE VERIFIED WITH SAME PRIOR TO PROCEEDING WITH THE WORK.**
2. SCHEDULED MARK DESIGNATIONS ARE TYPICAL TO THE PROJECT AND MAY NOT NECESSARILY BE FOUND ON THIS PLAN.
3. ▨ – AS SHOWN ON PLAN INDICATES 8" MASONRY WALL, SEE G.S.N., TYPICAL DETAILS, PLANS AND DETAILS FOR ADDITIONAL INFORMATION. ALL REINFORCING SHOWN AND/OR NOTED SHALL BE FULL HEIGHT OF WALL – TYP U.N.O.
4. ▨ – AS SHOWN ON PLAN INDICATES 600S162–54 STEEL STUD WALL. SEE PLAN FOR SIZES. STEEL STUDS SHALL BE SPACED AT 16" O.C. FOR LINTELS IN STEEL STUD WALLS, SEE DETAIL 24 – TYP U.N.O. SEE G.S.N., TYPICAL DETAILS, PLANS AND OTHER DETAILS FOR ADDITIONAL INFORMATION.
5. B1, B2, ETC – AS SHOWN ON PLAN INDICATES STEEL BEAM, SEE SCHEDULE THIS SHEET.
6. C1, C2, ETC – AS SHOWN ON PLAN INDICATES CONCRETE COLUMN, SEE SCHEDULE THIS THIS SHEET.
7. SC1, SC2, ETC – AS SHOWN ON PLAN INDICATES STEEL COLUMN, SEE SCHEDULE THIS SHEET.
8. ML1, ML2, ETC – AS SHOWN ON PLAN INDICATES MASONRY LINTEL, SEE SCHEDULE THIS SHEET, G.S.N. AND TYPICAL DETAILS.
9. W1, W2, ETC – AS SHOWN ON PLAN INDICATES CONCRETE WALL REINFORCING. SEE SCHEDULE THIS SHEET.
10. FOR MISCELLANEOUS LINTELS NOT SHOWN, SEE G.S.N. AND TYPICAL DETAILS. MASONRY CONTRACTOR SHALL COORDINATE WITH OTHER TRADES FOR EXACT SIZE AND LOCATION REQUIREMENTS.
11. MAS C.J. – AS SHOWN ON PLAN INDICATES MASONRY CONTROL JOINT IN MASONRY WALL AND/OR LINTEL, SEE G.S.N. AND TYPICAL DETAILS. JOINTS MAY BE SHOWN, BUT NOT NOTED ON THIS PLAN. SEE FOUNDATION PLAN FOR NOTED LOCATIONS.
12. CONCRETE TOPPING SHALL BE AS NOTED ON PLAN. VERIFY EXACT SIZE AND LOCATION OF DEPRESSED AND/OR RAISED SLABS WITH ARCH'L DRAWINGS. CONTROL JOINTS SHALL BE PER G.S.N. AND TYPICAL DETAILS. FOR ADDITIONAL INFORMATION, SEE G.S.N. AND DETAILS. CONTRACTOR TO VERIFY, AND BE RESPONSIBLE FOR VARIATIONS IN CONCRETE QUANTITY DUE TO CAMBER, CONSTRUCTION DEAD LOAD DEFLECTIONS, AND/OR TOLERANCES OF STRUCTURAL ELEMENTS (i.e. BEAMS, DECK, ETC.).
13. FOR CLARITY, DETAILS MAY SHOW ONLY ONE SIDE OF FRAMING CONDITIONS. ALL OPENINGS MAY NOT BE SHOWN ON THIS PLAN. FOR EXACT SIZE, NUMBER AND LOCATION OF OPENINGS, SEE ARCHITECTURAL, MECHANICAL, PLUMBING, ELECTRICAL, SPRINKLER AND THEIR RELATED DRAWINGS. FOR FRAMING AT OPENINGS, SEE TYPICAL DETAILS.
14. VERIFY EXACT SIZE, WEIGHT AND LOCATION OF EQUIPMENT AND SUPPORTS INDICATED ON PLAN WITH ARCHITECTURAL, MECHANICAL, PLUMBING, ELECTRICAL, SPRINKLER AND THEIR RELATED DRAWINGS. EQUIPMENT INDICATED ARE ONLY THOSE THAT EXCEED LOADS SPECIFIED IN THE G.S.N. FOR SUPPORT OF EQUIPMENT, SEE TYPICAL DETAILS AND OTHER TRADES.
15. CB1, CB2, ETC – AS SHOWN ON PLAN INDICATES CONCRETE BEAM, SEE SCHEDULE THIS SHEET.
16. SR1, SR2, ETC – AS SHOWN ON PLAN INDICATES STUD RAIL, SEE SCHEDULE THIS SHEET.

CONCRETE BEAM (CB) SCHEDULE

919–22

MARK	WIDTH	DEPTH	LONGITUDINAL REINFORCING	STIRRUPS	REMARKS
CB1	48"	38"	12 #11 TOP AND BOTTOM (2 LAYERS)	3 SETS OF #4 AT 4" O.C.	---
CB2	60"	50"	12 #11 TOP AND BOTTOM (2 LAYERS)	3 SETS OF #4 AT 16" O.C. 3 SETS OF #4 AT 3 1/2" O.C.	BALANCE OF SPAN 0' – 9'–0" FROM GRIDS 4 to 5
CB3	64"	68"	16 #11 TOP AND BOTTOM (2 LAYERS)	3 SETS OF #4 AT 8" O.C. 3 SETS OF #4 AT 16" O.C.	0' – 14'–0" FROM GRID 7 to 6 BALANCE OF SPAN
CB4	36"	66"	6 #9 TOP AND BOTTOM	2 SETS OF #4 AT 14" O.C.	---
CB5	48"	66"	8 #11 TOP AND BOTTOM	2 SETS OF #4 AT 14" O.C.	---
CB6	18"	24"	3 #6 TOP AND BOTTOM	#4 AT 10" O.C.	SEE DETAIL 230

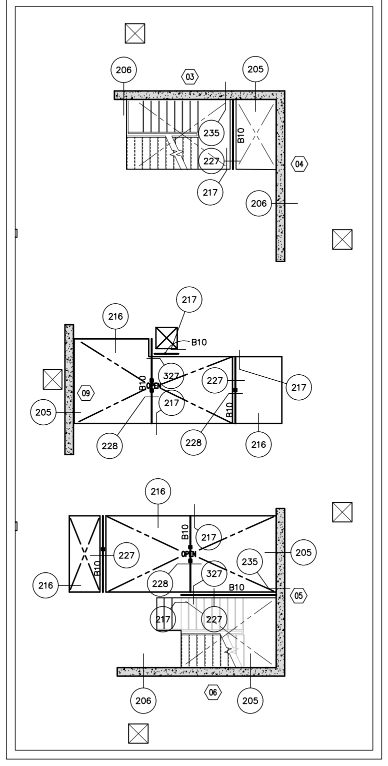

A ELEVATOR SHAFT PLAN

CONCRETE SLAB NOTE

13–112

CONCRETE POST–TENSIONED SLAB THICKNESS BY LEVEL:

L1–L4 = 10" THICK (f'c=6 ksi AT 56 DAYS)
L5–L19 = 8" THICK (f'c=6 ksi AT 56 DAYS)
LR = 12" THICK (f'c=6 ksi AT 56 DAYS)

THESE DRAWINGS/CALCULATIONS ARE CONSIDERED PRELIMINARY –NOT FOR CONSTRUCTION OR RECORDING UNLESS THE STRUCTURAL ENGINEER OF RECORD'S SEAL IS AFFIXED WITH WRITTEN SIGNATURE.

AWBREY
COOK
MCGILL
architects
1045 14th Street, Suite 100
San Diego, CA 92101-5701
Phone: 619 . 398 . 3480

ARCHITECTS:
THOMAS B. AWBREY C 17578
CLIFFORD W. COOK C 19705
SCOT W. McGILL C 21059

42194
BRADY K. NOTBOHM
5/14/15
EXPIRES 03-31-17

Copyright © 2014
AWBREY COOK MCGILL ARCHITECTS
All ideas, designs, and arrangements indicated on these drawings are the property of AWBREY COOK MCGILL ARCHITECTS and are intended to be used in connection with this specific project only and shall not otherwise be used for any purpose whatsoever without the written consent of the architects. There shall be no changes or deviations from these drawings or the accompanying specifications without the written consent of the architects.

CONSULTANTS:

CARUSO
TURLEY
SCOTT
INC.
consulting
structural
engineers
1215 W. Rio Salado Pkwy
Suite 200
Tempe, Arizona 85281
(480) 774–1700
(480) 774–1701 FAX
www.ctsaz.com

ENGINEER: TRM/BKN – JOB NUMBER: 13–112

REVISIONS:

CONSTRUCTION BID SET	03/09/2015
△2 INSTRUCTION BULLETIN 2	05/11/2015

PROJECT:

MARRIOTT RESIDENCE INN
- COURTYARD @ LUHRS
A Development of - LUHRS CM, LLC
Phoenix, Arizona

DRAWN:	SMV
CHECKED:	BKN/TRM
DATE:	12/16/13
PROJECT NO.:	12–1601

SHEET TITLE:
TENTH FLOOR
FRAMING PLAN

SHEET NO.:
S1.7

FINAL FOR CONSTRUCTION - 05/18/15

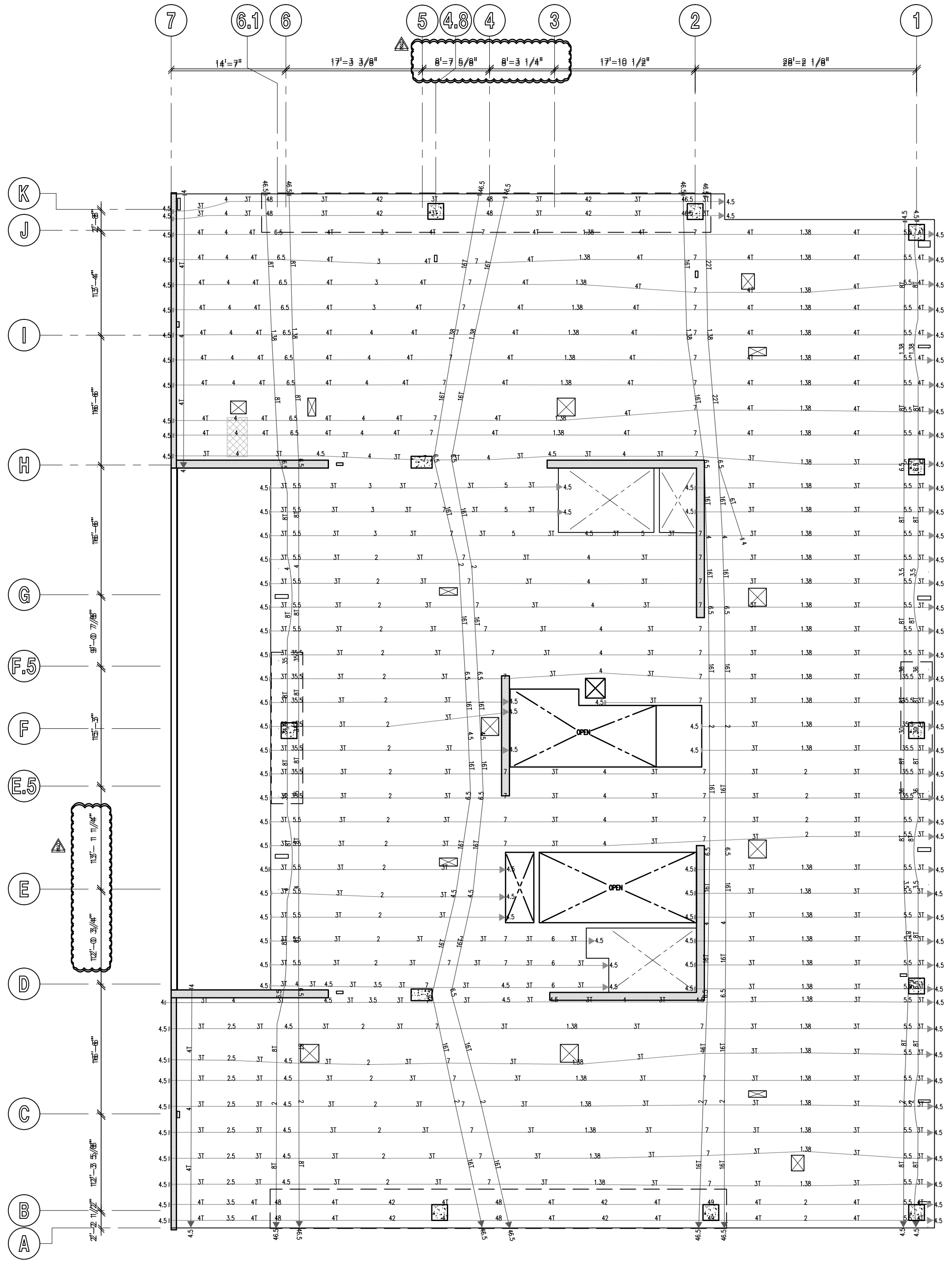

TENTH FLOOR POST-TENSION PLAN

SCALE: 1/8" = 1'-0"

POST TENSION AND SLAB REINFORCING DESIGNATION

931–31

POST TENSION LINE LEGEND

4T◄——┤ DENOTES SINGLE PULL BANDED TENDONS.

4T◄——►4T DENOTES DOUBLE PULL BANDED TENDONS.

INDICATED NUMBER OF 1/2" DIA TENDONS FOR EFFECTIVE FORCE, SEE BELOW.

NOTE:
DIMENSIONS SHOWN ON PLAN INDICATE "DRAPE" OF TENDON FROM BOTTOM OF SLAB. INSTALL WITH 1" MIN CLEARANCE AT HIGH/LOW POSITIONING U.N.O.

EFFECTIVE FORCES:

1T = 26.8 kip, 2T = 53.5 kip, 3T = 80.3 kip, 4T = 107.0 kip
5T = 133.8 kip, 6T = 160.5 kip, 7T = 187.3 kip, 8T = 214.0 kip
9T = 245.8 kip, 10T = 267.5 kip, 11T = 294.3 kip, 12T = 321.0 kip
13T = 347.8 kip, 14T = 374.5 kip, 15T = 401.3 kip, 16T = 428.0 kip

MILD STEEL LINE LEGEND

12#5x16@6BM(EW)

- TOTAL NUMBER OF BARS. IF NUMBER IS NOT DESIGNATED, REINFORCING IS CONTINUOUS IN DIRECTION SHOWN.
- REINFORCING BAR SIZE.
- LENGTH (FEET). IF LENGTH IS NOT DESIGNATED REINFORCING IS CONTINUOUS AND LAPPED OVER LINE OF SUPPORT. LENGTH DOES NOT INCLUDE STANDARD HOOK AT END OF BAR.
- TYPICAL EACH WAY.
- TM=TOPMOST, T=TOP, C= CENTERED, B= BOTTOM BM = BOTTOMMOST. WHERE TWO LAYERS OF REINFORCING OCCUR IN SAME POSITION THE BOTTOMMOST OR TOPMOST LAYER SHALL BE FORMED WITH REINFORCING THAT HAS THE LARGEST AREA. REINFORCING SUPPORTING CANTILEVER CONDITION IS ALWAYS TOPMOST LAYER.
- REINFORCING SPACING (INCHES).

FOR ADDITIONAL INFORMATION, SEE G.S.N.. TYPICAL DETAILS, PLAN AND DETAILS.

EXTENT OF REINFORCING

12#5x16@6BM

SINGLE ARROW DENOTES EXTENT OF REINFORCING. DOUBLE ARROW DENOTES REINFORCING IS CONTINUOUS TO EDGE OR UNLESS NOTED OTHERWISE.

NOTE: SEE G.S.N., TYPICAL DETAILS AND PLAN FOR ADDITIONAL INFORMATION.

CONCRETE SLAB NOTE

13–112

CONCRETE POST–TENSIONED SLAB THICKNESS BY LEVEL:
L1-L4 = 10" THICK (f'c=6 ksi AT 56 DAYS)
L5-L19 = 8" THICK (f'c=6 ksi AT 56 DAYS)
LR = 12" THICK (f'c=6 ksi AT 56 DAYS)

FINAL FOR CONSTRUCTION - 05/18/15

AWBREY
COOK
MCGILL
architects
1045 14th Street, Suite 100
San Diego, CA 92101-5701
Phone: 619 . 398 . 3480

ARCHITECTS:

THOMAS B. AWBREY	C 17578
CLIFFORD W. COOK	C 19705
SCOT W. McGILL	C 21059

42194
BRADY K.
NOTBOHM
5/14/15
EXPIRES 03-31-17

Copyright © 2014
AWBREY COOK MCGILL ARCHITECTS
All ideas, designs, and arrangements indicated on these drawings are the property of AWBREY COOK MCGILL ARCHITECTS and are intended to be used in connection with this specific project only and shall not otherwise be used for any purpose whatsoever without the written consent of the architects. There shall be no changes or deviations from these drawings or the accompanying specifications without the written consent of the architects.

CONSULTANTS:

CARUSO
TURLEY
SCOTT
INC.
consulting
structural
engineers
1215 W. Rio Salado Pkwy
Suite 200
Tempe, Arizona 85281
(480) 774-1700
(480) 774-1701 FAX
www.ctsaz.com

ENGINEER: TRM/BKN – JOB NUMBER: 13–112

REVISIONS:

CONSTRUCTION BID SET	03/09/2015
2 INSTRUCTION BULLETIN 2	05/11/2015

THESE DRAWINGS/CALCULATIONS ARE CONSIDERED PRELIMINARY –NOT FOR CONSTRUCTION OR RECORDING UNLESS THE STRUCTURAL ENGINEER OF RECORD'S SEAL IS AFFIXED WITH WRITTEN SIGNATURE.

PROJECT:

MARRIOTT RESIDENCE INN
- COURTYARD @ LUHRS
A Development of - LUHRS CM, LLC
Phoenix, Arizona

DRAWN:	SMV
CHECKED:	BKN/TRM
DATE:	12/16/13
PROJECT NO.:	12–1601

SHEET TITLE:
TENTH FLOOR
POST-TENSION PLAN

SHEET NO.:
S1.7A

AWBREY . COOK . McGILL . ARCHITECTS 1045 14th Street Suite 100, San Diego, California 92101.5701 Telephone 619.398.3480 Fax. 619.398.3488

STUD RAIL (SR) SCHEDULE (L5 – L19)

13–112

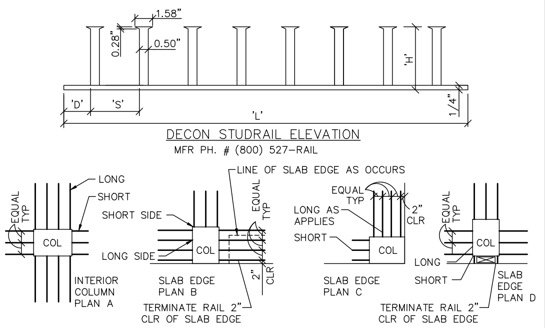

DECON STUDRAIL ELEVATION
MFR PH. # (800) 527–RAIL

NOTE:
1. LOCATE END OF STUD RAILS AT FACE OF COLUMN.
2. INSTALL WITH TOP AND BOTTOM CLEARANCE TO SLAB PER G.S.N.
3. INSTALL TYPICAL RAIL PER SCHEDULE BELOW. TERMINATE RAIL AS REQUIRED AT SLAB EDGE.

STUD RAILS

MARK	# STUDS PER RAIL	LENGTH 'L'	HEIGHT 'H'	SPACING 'S'	DISTANCE 'D'	RAILS PER COLUMN
SEE STEEL STUD RAIL SCHEDULE (L1 – L4)						
SR13	7	21 1/2"	6 1/2"	2 3/4"	2 1/4"	3 SHORT SIDE–3 LONG SIDE (9 TOTAL PER B)
SR14	7	30"	6 1/2"	4 1/4"	2 1/4"	4 SHORT SIDE–4 LONG SIDE (12 TOTAL PER B)
SR15	15	40"	6 1/2"	2 1/2"	2 1/4"	3 SHORT SIDE–4 LONG SIDE (11 TOTAL PER B)
SR16	6	25 3/4"	6 1/2"	4 1/4"	2 1/4"	3 SHORT SIDE–4 LONG SIDE (14 TOTAL PER A)
SR17	SHORT 3 LONG 5	SHORT 13" LONG 21 1/2"	6 1/2"	4 1/4"	2 1/4"	3 SHORT SIDE–4 LONG SIDE (14 TOTAL SIM PER D)
SR18	SHORT 3 LONG 7	SHORT 13" LONG 30"	6 1/2"	4 1/4"	2 1/4"	3 EACH SIDE (12 TOTAL SIM PER A)
SR19	7	30"	6 1/2"	4 1/4"	2 1/4"	3 SHORT SIDE–4 LONG SIDE (14 TOTAL PER A)
SR20	SHORT 8 LONG 20	SHORT 32 1/2" LONG 80 1/2"	6 1/2"	4"	2 1/4"	3 EACH SIDE (12 TOTAL PER D)
SR21	6	25 3/4"	6 1/2"	4 1/4"	2 1/4"	3 SHORT SIDE–4 LONG SIDE (14 TOTAL PER A)
SR22	SHORT 3 LONG 6	SHORT 13" LONG 25 3/4"	6 1/2"	4 1/4"	2 1/4"	3 EACH SIDE (12 TOTAL SIM PER A)
SR23	SHORT 2 LONG 6	SHORT 9" LONG 25 3/4"	6 1/2"	4 1/4"	2 1/4"	3 EACH SIDE (12 TOTAL SIM PER D)
SR24	SHORT 3 LONG 5	SHORT 13" LONG 21 1/2"	6 1/2"	4 1/4"	2 1/4"	3 EACH SIDE (9 TOTAL SIM PER B)
SR25	SHORT 3 LONG 4	SHORT 13" LONG 17 1/4"	6 1/2"	4 1/4"	2 1/4"	3 EACH SIDE (12 TOTAL SIM PER D)
SR26	SHORT 4 LONG 14	SHORT 12 3/4" LONG 40 1/4"	6 1/2"	2 3/4"	2 1/4"	3 EACH SIDE (12 TOTAL PER D)
SR27	SHORT 12 LONG 40	SHORT 32" LONG 102"	6 1/2"	2 1/2"	2 1/4"	4 EACH SIDE (16 TOTAL PER D)

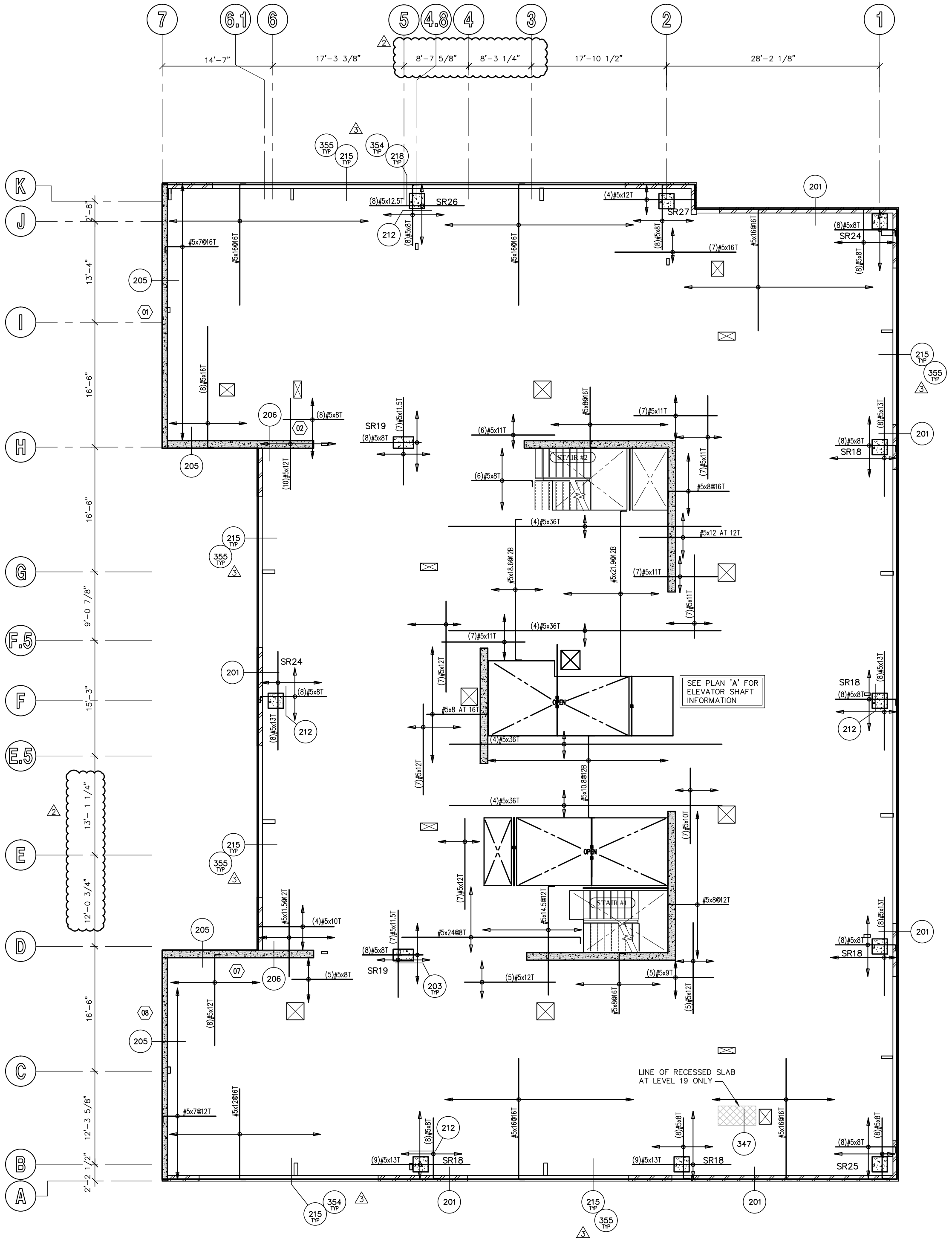

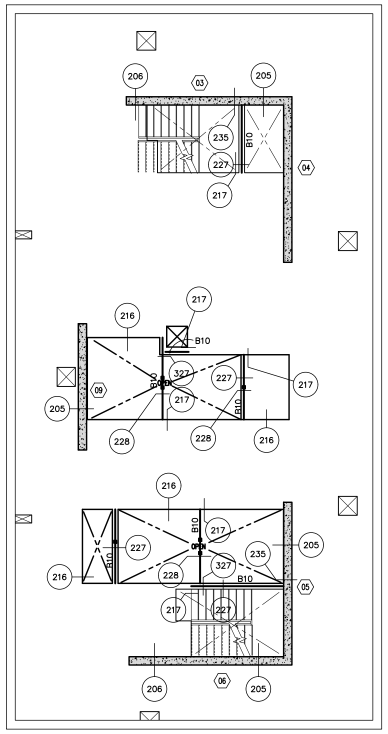

A ELEVATOR SHAFT PLAN

CONCRETE SLAB NOTE

13–112

CONCRETE POST–TENSIONED SLAB THICKNESS BY LEVEL:
L1–L4 = 10" THICK (f'c=6 ksi AT 56 DAYS)
L5–L19 = 8" THICK (f'c=6 ksi AT 56 DAYS)
LR = 12" THICK (f'c=6 ksi AT 56 DAYS)

ELEVENTH - NINETEENTH FLOOR FRAMING PLAN

SCALE: 1/8" = 1'-0"

STEEL BEAM (B) SCHEDULE

919–02

NOTE:
1. FOR SIZE AND QUANTITY OF BOLTS, SEE TYPICAL BOLT DETAIL – U.N.O.
2. INDICATES POSITIVE BEAM CAMBER. WHERE "N/A" (NOT APPLICABLE) IS SHOWN, PROVIDE AS ROLLED CAMBER. INSTALL CROWN UP PER AISC.
3. FOR ADDITIONAL INFORMATION, SEE G.S.N., PLAN(s) AND DETAILS.

MARK	SIZE	CAMBER (SEE NOTE 2)	REMARKS
B1	W14 X 22	---	---
B2	W16 X 31	---	---
B3	W18 X 40	---	---
B4	W24 X 55	---	---
B5	W30 X 124	---	---
B6	HSS 12x6x1/4"	---	---
B7	HSS 12x10x3/8"	---	---
B8	C15 X 33.9	---	RADIUS BEAM PER ARCHITECTURAL AT B8A
B9	W8 X 31	---	---
B10	HSS 6x4x1/4"	---	---
B11	W12 X 35	---	---
B12	HSS 8x4x3/8"	---	RADIUS BEAM PER ARCHITECTURAL AT B12A

PLAN NOTES – TYP U.N.O.:

1. **VERIFY ALL DIMENSIONS WITH ARCHITECTURAL DRAWINGS AND FIELD CONDITIONS. BUILDING DIMENSIONS, WHERE SHOWN, WERE PROVIDED BY THE ARCHITECT AND SHALL BE VERIFIED WITH SAME PRIOR TO PROCEEDING WITH THE WORK.**
2. SCHEDULED MARK DESIGNATIONS ARE TYPICAL TO THE PROJECT AND MAY NOT NECESSARILY BE FOUND ON THIS PLAN.
3. ▨ – AS SHOWN ON PLAN INDICATES 8" MASONRY WALL, SEE G.S.N., TYPICAL DETAILS, PLANS AND DETAILS FOR ADDITIONAL INFORMATION. ALL REINFORCING SHOWN AND/OR NOTED SHALL BE FULL HEIGHT OF WALL – TYP U.N.O.
4. ▨ – AS SHOWN ON PLAN INDICATES 600S162–54 STEEL STUD WALL. SEE PLAN FOR SIZES. STEEL STUDS SHALL BE SPACED AT 16" O.C. FOR LINTELS IN STEEL STUD WALLS, SEE DETAIL 24 – TYP U.N.O. SEE G.S.N., TYPICAL DETAILS, PLANS AND OTHER DETAILS FOR ADDITIONAL INFORMATION.
5. B1, B2, ETC – AS SHOWN ON PLAN INDICATES STEEL BEAM, SEE SCHEDULE THIS SHEET.
6. C1, C2, ETC – AS SHOWN ON PLAN INDICATES CONCRETE COLUMN, SEE SCHEDULE THIS THIS SHEET.
7. SC1, SC2, ETC – AS SHOWN ON PLAN INDICATES STEEL COLUMN, SEE SCHEDULE THIS SHEET.
8. ML1, ML2, ETC – AS SHOWN ON PLAN INDICATES MASONRY LINTEL, SEE SCHEDULE THIS SHEET, G.S.N. AND TYPICAL DETAILS.
9. W1, W2, ETC – AS SHOWN ON PLAN INDICATES CONCRETE WALL REINFORCING. SEE SCHEDULE THIS SHEET.
10. FOR MISCELLANEOUS LINTELS NOT SHOWN, SEE G.S.N. AND TYPICAL DETAILS. MASONRY CONTRACTOR SHALL COORDINATE WITH OTHER TRADES FOR EXACT SIZE AND LOCATION REQUIREMENTS.
11. MAS C.J. – AS SHOWN ON PLAN INDICATES MASONRY CONTROL JOINT IN MASONRY WALL AND/OR LINTEL, SEE G.S.N. AND TYPICAL DETAILS. JOINTS MAY BE SHOWN, BUT NOT NOTED ON THIS PLAN. SEE FOUNDATION PLAN FOR NOTED LOCATIONS.
12. CONCRETE TOPPING SHALL BE AS NOTED ON PLAN. VERIFY EXACT SIZE AND LOCATION OF DEPRESSED AND/OR RAISED SLABS WITH ARCH'L DRAWINGS. CONTROL JOINTS SHALL BE PER G.S.N. AND TYPICAL DETAILS. FOR ADDITIONAL INFORMATION, SEE G.S.N. AND DETAILS. CONTRACTOR TO VERIFY, AND BE RESPONSIBLE FOR VARIATIONS IN CONCRETE QUANTITY DUE TO CAMBER, CONSTRUCTION DEAD LOAD DEFLECTIONS, AND/OR TOLERANCES OF STRUCTURAL ELEMENTS (i.e. BEAMS, DECK, ETC.).
13. FOR CLARITY, DETAILS MAY SHOW ONLY ONE SIDE OF FRAMING CONDITIONS. ALL OPENINGS MAY NOT BE SHOWN ON THIS PLAN. FOR EXACT SIZE, NUMBER AND LOCATION OF OPENINGS, SEE ARCHITECTURAL, MECHANICAL, PLUMBING, ELECTRICAL, SPRINKLER AND THEIR RELATED DRAWINGS. FOR FRAMING AT OPENINGS, SEE TYPICAL DETAILS.
14. VERIFY EXACT SIZE, WEIGHT AND LOCATION OF EQUIPMENT AND SUPPORTS INDICATED ON PLAN WITH ARCHITECTURAL, MECHANICAL, PLUMBING, ELECTRICAL, SPRINKLER AND THEIR RELATED DRAWINGS. EQUIPMENT INDICATED ARE ONLY THOSE THAT EXCEED LOADS SPECIFIED IN THE G.S.N. FOR SUPPORT OF EQUIPMENT, SEE TYPICAL DETAILS AND OTHER TRADES.
15. CB1, CB2, ETC – AS SHOWN ON PLAN INDICATES CONCRETE BEAM, SEE SCHEDULE THIS SHEET.
16. SR1, SR2, ETC – AS SHOWN ON PLAN INDICATES STUD RAIL, SEE SCHEDULE THIS SHEET.

AWBREY
COOK
MCGILL
architects
1045 14th Street, Suite 100
San Diego, CA 92101-5701
Phone: 619 . 398 . 3480

ARCHITECTS:
THOMAS B. AWBREY C 17578
CLIFFORD W. COOK C 19705
SCOT W. McGILL C 21059

Registered Professional Engineer (Structural)
CERTIFICATE NO. 42194
BRADY K. NOTBOHM
Date Signed 5/14/15
ARIZONA, U.S.A.
EXPIRES 03-31-17

Copyright © 2014
AWBREY COOK MCGILL ARCHITECTS
All ideas, designs, and arrangements indicated on these drawings are the property of AWBREY COOK MCGILL ARCHITECTS and are intended to be used in connection with this specific project only and shall not otherwise be used for any purpose whatsoever without the written consent of the architects. There shall be no changes or deviations from these drawings or the accompanying specifications without the written consent of the architects.

CONSULTANTS:

CARUSO
TURLEY
SCOTT
INC.
consulting
structural
engineers
1215 W. Rio Salado Pkwy
Suite 200
Tempe, Arizona 85281
(480) 774–1700
(480) 774–1701 FAX
www.ctsaz.com

ENGINEER: TRM/BKN – JOB NUMBER: 13–112

REVISIONS:

CONSTRUCTION BID SET	03/09/2015
2 INSTRUCTION BULLETIN 2	05/11/2015

PROJECT:
MARRIOTT RESIDENCE INN
- COURTYARD @ LUHRS
A Development of - LUHRS CM, LLC
Phoenix, Arizona

DRAWN:	SMV
CHECKED:	BKN/TRM
DATE:	12/16/13
PROJECT NO.:	12–1601

SHEET TITLE:
ELEVENTH - NINETEENTH FLOOR FRAMING PLAN

SHEET NO.:
S1.8

THESE DRAWINGS/CALCULATIONS ARE CONSIDERED PRELIMINARY –NOT FOR CONSTRUCTION OR RECORDING UNLESS THE STRUCTURAL ENGINEER OF RECORD'S SEAL IS AFFIXED WITH WRITTEN SIGNATURE.

AWBREY . COOK . McGILL . ARCHITECTS 1045 14th Street Suite 100, San Diego, California 92101.5701 Telephone 619.398.3480 Fax. 619.398.3488

FINAL FOR CONSTRUCTION - 05/18/15

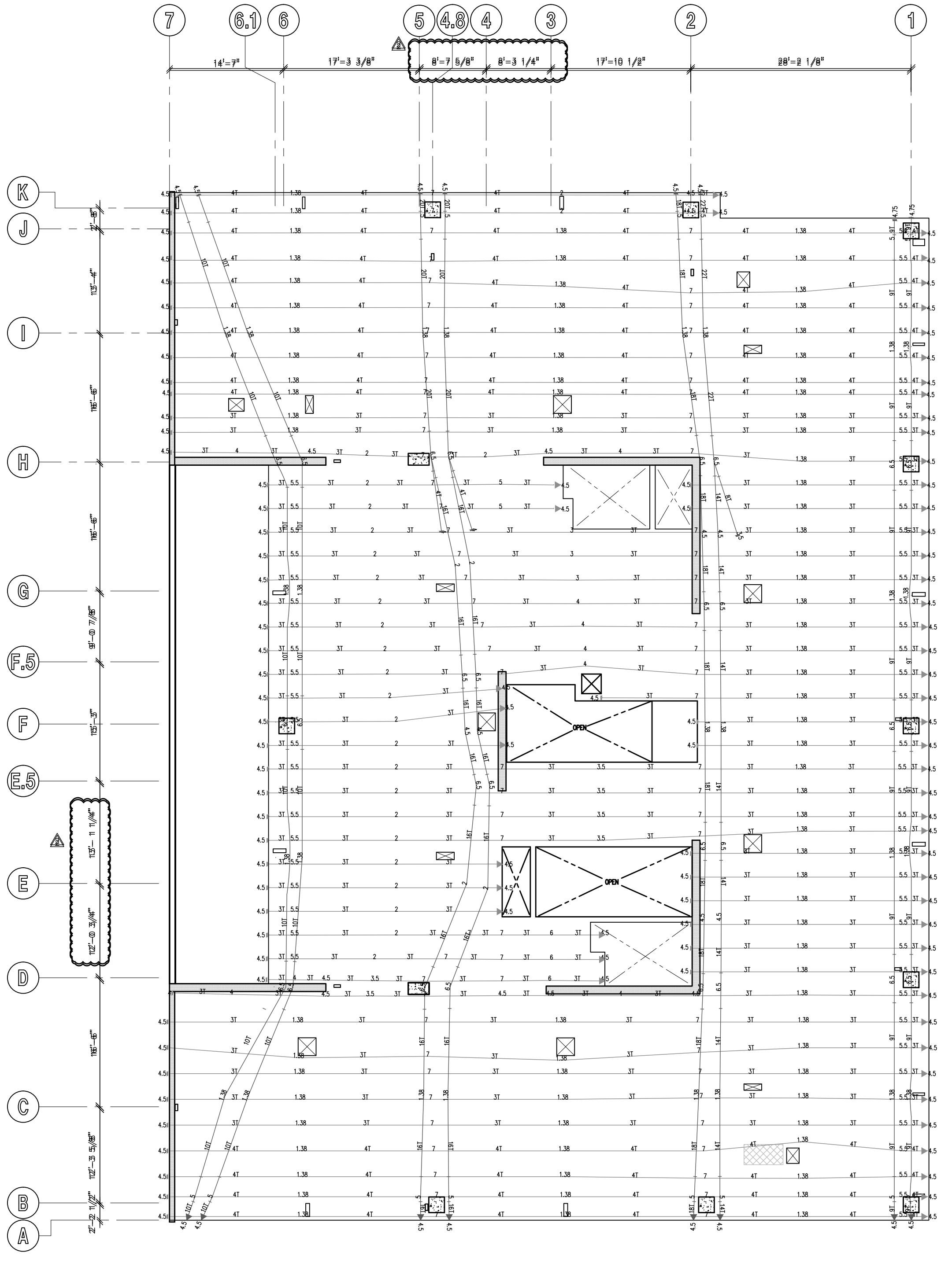

ELEVENTH - NINETEENTH FLOOR POST-TENSION PLAN

SCALE: 1/8" = 1'-0"

POST TENSION AND SLAB REINFORCING DESIGNATION

931-31

POST TENSION LINE LEGEND

4T◄——| DENOTES SINGLE PULL BANDED TENDONS.

4T◄——►4T DENOTES DOUBLE PULL BANDED TENDONS.

INDICATED NUMBER OF 1/2" DIA TENDONS
FOR EFFECTIVE FORCE, SEE BELOW.

NOTE:
DIMENSIONS SHOWN ON PLAN INDICATE "DRAPE" OF TENDON FROM BOTTOM OF SLAB. INSTALL WITH 1" MIN CLEARANCE AT HIGH/LOW POSITIONING U.N.O.

EFFECTIVE FORCES:
1T = 26.8 kip, 2T = 53.5 kip, 3T = 80.3 kip, 4T = 107.0 kip
5T = 133.8 kip, 6T = 160.5 kip, 7T = 187.3 kip, 8T = 214.0 kip
9T = 245.8 kip, 10T = 267.5 kip, 11T = 294.3 kip, 12T = 321.0 kip
13T = 347.8 kip, 14T = 374.5 kip, 15T = 401.3 kip, 16T = 428.0 kip

MILD STEEL LINE LEGEND

12#5x16@6BM(EW)

- TOTAL NUMBER OF BARS. IF NUMBER IS NOT DESIGNATED, REINFORCING IS CONTINUOUS IN DIRECTION SHOWN.
- REINFORCING BAR SIZE.
- LENGTH (FEET). IF LENGTH IS NOT DESIGNATED REINFORCING IS CONTINUOUS AND LAPPED OVER LINE OF SUPPORT. LENGTH DOES NOT INCLUDE STANDARD HOOK AT END OF BAR.
- TYPICAL EACH WAY.
- TM=TOPMOST, T=TOP, C= CENTERED, B= BOTTOM BM = BOTTOMMOST. WHERE TWO LAYERS OF REINFORCING OCCUR IN SAME POSITION THE BOTTOMMOST OR TOPMOST LAYER SHALL BE FORMED WITH REINFORCING THAT HAS THE LARGEST AREA. REINFORCING SUPPORTING CANTILEVER CONDITION IS ALWAYS TOPMOST LAYER.
- REINFORCING SPACING (INCHES).

FOR ADDITIONAL INFORMATION, SEE G.S.N.. TYPICAL DETAILS, PLAN AND DETAILS.

EXTENT OF REINFORCING

12#5x16@6BM

SINGLE ARROW DENOTES EXTENT OF REINFORCING. DOUBLE ARROW DENOTES REINFORCING IS CONTINUOUS TO EDGE OR UNLESS NOTED OTHERWISE.

NOTE: SEE G.S.N., TYPICAL DETAILS AND PLAN FOR ADDITIONAL INFORMATION.

CONCRETE SLAB NOTE

13-112

CONCRETE POST-TENSIONED SLAB THICKNESS BY LEVEL:
L1-L4 = 10" THICK (f'c=6 ksi AT 56 DAYS)
L5-L19 = 8" THICK (f'c=6 ksi AT 56 DAYS)
LR = 12" THICK (f'c=6 ksi AT 56 DAYS)

FINAL FOR CONSTRUCTION - 05/18/15

AWBREY
COOK
MCGILL
architects
1045 14th Street, Suite 100
San Diego, CA 92101-5701
Phone: 619 . 398 . 3480

ARCHITECTS:

THOMAS B. AWBREY	C 17578
CLIFFORD W. COOK	C 19705
SCOT W. McGILL	C 21059

42194
BRADY K.
NOTBOHM
5/14/15
EXPIRES 03-31-17

Copyright © 2014
AWBREY COOK MCGILL ARCHITECTS
All ideas, designs, and arrangements indicated on these drawings are the property of AWBREY COOK MCGILL ARCHITECTS and are intended to be used in connection with this specific project only and shall not otherwise be used for any purpose whatsoever without the written consent of the architects. There shall be no changes or deviations from these drawings or the accompanying specifications without the written consent of the architects.

CONSULTANTS:

CARUSO
TURLEY
SCOTT
INC.
consulting
structural
engineers
1215 W. Rio Salado Pkwy
Suite 200
Tempe, Arizona 85281
(480) 774-1700
(480) 774-1701 FAX
www.ctsaz.com

ENGINEER: TRM/BKN – JOB NUMBER: 13-112

REVISIONS:

CONSTRUCTION BID SET	03/09/2015
△2 INSTRUCTION BULLETIN 2	05/11/2015

PROJECT:

MARRIOTT RESIDENCE INN
- COURTYARD @ LUHRS
A Development of - LUHRS CM, LLC
Phoenix, Arizona

DRAWN:	SMV
CHECKED:	BKN/TRM
DATE:	12/16/13
PROJECT NO.:	12-1601

SHEET TITLE:
ELEVENTH - NINETEENTH FLOOR POST-TENSION PLAN

SHEET NO.:
S1.8A

THESE DRAWINGS/CALCULATIONS ARE CONSIDERED PRELIMINARY –NOT FOR CONSTRUCTION OR RECORDING UNLESS THE STRUCTURAL ENGINEER OF RECORD'S SEAL IS AFFIXED WITH WRITTEN SIGNATURE.

AWBREY . COOK . McGILL . ARCHITECTS 1045 14th Street Suite 100, San Diego, California 92101.5701 Telephone 619.398.3480 Fax. 619.398.3488

STUD RAIL (SR) SCHEDULE (LR)

13–112

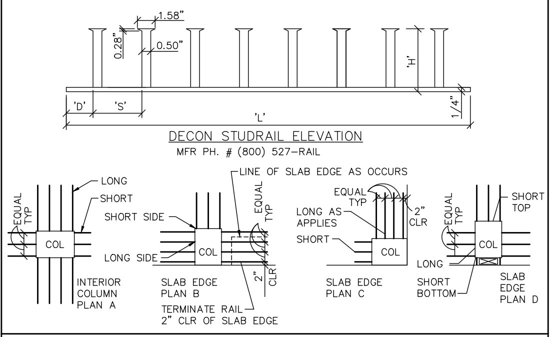

DECON STUDRAIL ELEVATION
MFR PH. # (800) 527–RAIL

NOTE:
1. LOCATE END OF STUD RAILS AT FACE OF COLUMN.
2. INSTALL WITH TOP AND BOTTOM CLEARANCE TO SLAB PER G.S.N.
3. INSTALL TYPICAL RAIL PER SCHEDULE BELOW. TERMINATE RAIL AS REQUIRED AT SLAB EDGE.

STUD RAILS

MARK	# STUDS PER RAIL	LENGTH 'L'	HEIGHT 'H'	SPACING 'S'	DISTANCE 'D'	RAILS PER COLUMN
SEE STEEL STUD RAIL SCHEDULES (L1 – L4) & (L5 – L19)						
SR28		---- NOT USED ----				
SR29	5	36 3/4"	10 1/2"	7 1/4"	3 7/8"	2 SHORT SIDE–3 LONG SIDE (10 TOTAL PER A)
SR30		---- NOT USED ----				

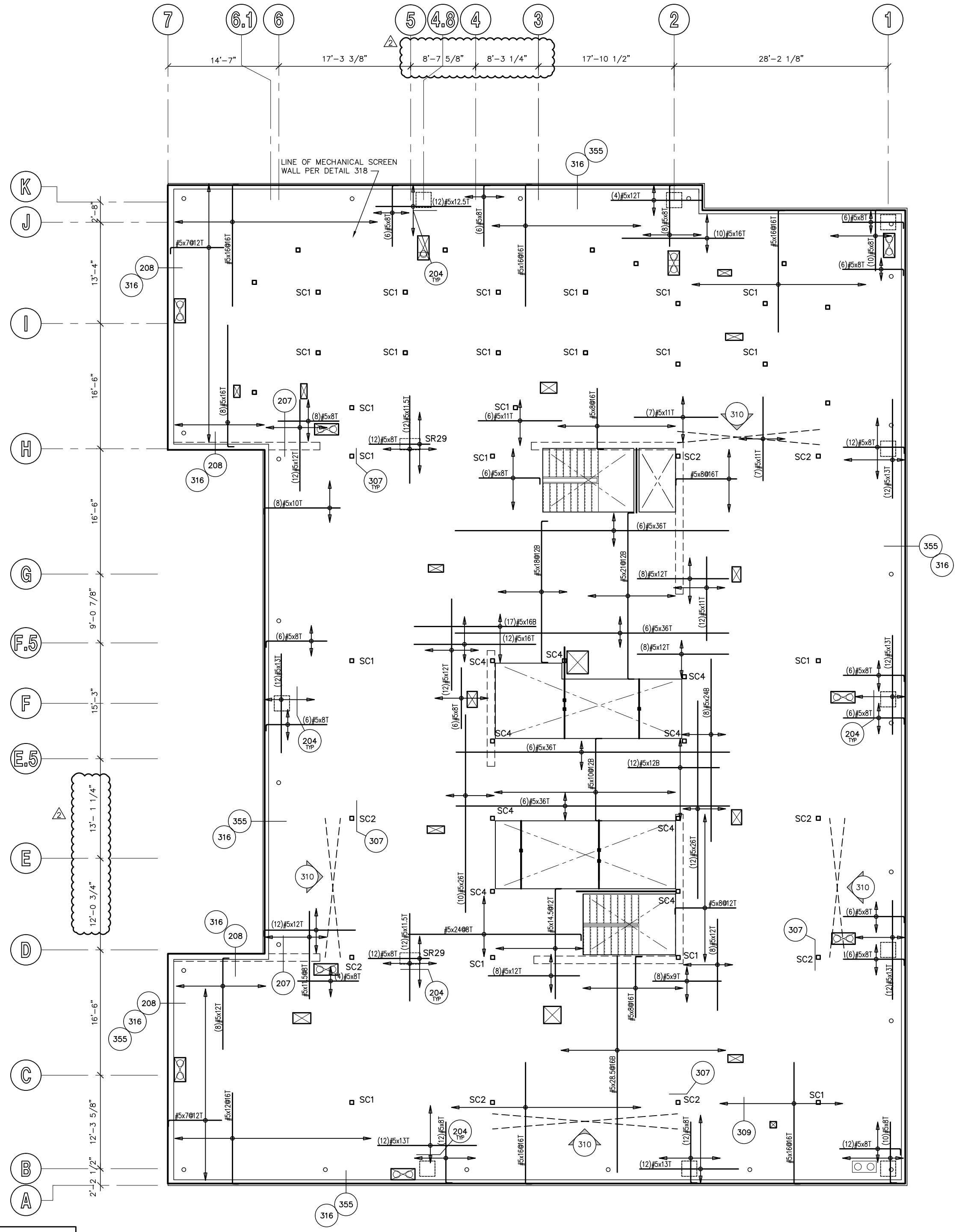

TOP OF PARAPET = 5'-0" ABOVE ROOF DECK
ROOF ELEVATION = 218'-4"

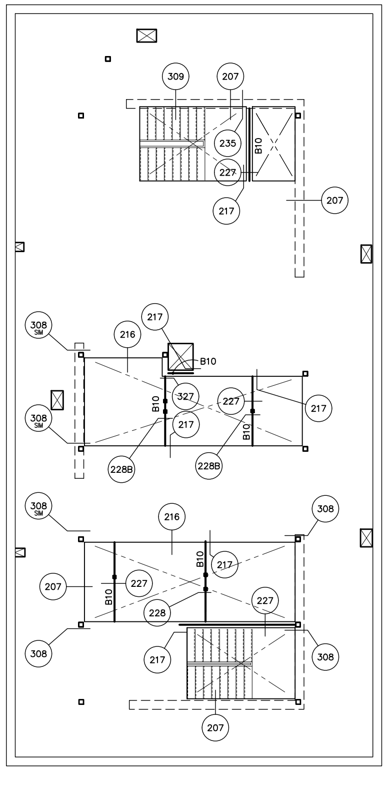

ELEVATOR SHAFT PLAN

A

CONCRETE SLAB NOTE

13–112

CONCRETE POST–TENSIONED SLAB THICKNESS BY LEVEL:
L1–L4 = 10" THICK (f'c=6 ksi AT 56 DAYS)
L5–L19 = 8" THICK (f'c=6 ksi AT 56 DAYS)
LR = 12" THICK (f'c=6 ksi AT 56 DAYS)

LOW ROOF FRAMING PLAN

SCALE: 1/8" = 1'-0"

STEEL BEAM (B) SCHEDULE

919–02

NOTE:
1. FOR SIZE AND QUANTITY OF BOLTS, SEE TYPICAL BOLT DETAIL – U.N.O.
2. INDICATES POSITIVE BEAM CAMBER. WHERE "N/A" (NOT APPLICABLE) IS SHOWN, PROVIDE AS ROLLED CAMBER. INSTALL CROWN UP PER AISC.
3. FOR ADDITIONAL INFORMATION, SEE G.S.N., PLAN(s) AND DETAILS.

MARK	SIZE	CAMBER (SEE NOTE 2)	REMARKS
B1	W14 X 22	---	---
B2	W16 X 31	---	---
B3	W18 X 40	---	---
B4	W24 X 55	---	---
B5	W30 X 124	---	---
B6	HSS 12x6x1/4"	---	---
B7	HSS 12x10x3/8"	---	---
B8	C15 X 33.9	---	RADIUS BEAM PER ARCHITECTURAL AT B8A
B9	W8 X 31	---	---
B10	HSS 6x4x1/4"	---	---
B11	W12 X 35	---	---
B12	HSS 8x4x3/8"	---	RADIUS BEAM PER ARCHITECTURAL AT B12A

STEEL COLUMN (SC) SCHEDULE

910–01

NOTE: FOR ANCHOR BOLT PATTERN, SEE TYPICAL DETAIL 13

MARK	SIZE	BASE CONNECTION	BOLT PATTERN AND/OR REMARKS
SC1	HSS 6x6x1/4"	3/4" X 12" X 12" STEEL PLATE WITH 4–3/4" DIA ANCHOR BOLTS	---
SC2	HSS 6x6x1/4"	3/4" X 12" X 18" STEEL PLATE WITH 6–3/4" DIA ANCHOR BOLTS	SEE DETAIL 311
SC3	HSS 6x6x3/8"	3/4" X 12" X 12" STEEL PLATE WITH 4–3/4" DIA ANCHOR BOLTS	ELEV. RAIL SUPPORT COLUMN
SC4	HSS 8x8x3/8"	3/4" X 12" X 12" STEEL PLATE WITH 4–3/4" DIA ANCHOR BOLTS	---

PLAN NOTES – TYP U.N.O.:

1. **VERIFY ALL DIMENSIONS WITH ARCHITECTURAL DRAWINGS AND FIELD CONDITIONS. BUILDING DIMENSIONS, WHERE SHOWN, WERE PROVIDED BY THE ARCHITECT AND SHALL BE VERIFIED WITH SAME PRIOR TO PROCEEDING WITH THE WORK.**
2. SCHEDULED MARK DESIGNATIONS ARE TYPICAL TO THE PROJECT AND MAY NOT NECESSARILY BE FOUND ON THIS PLAN.
3. ▨ – AS SHOWN ON PLAN INDICATES 8" MASONRY WALL, SEE G.S.N., TYPICAL DETAILS, PLANS AND DETAILS FOR ADDITIONAL INFORMATION. ALL REINFORCING SHOWN AND/OR NOTED SHALL BE FULL HEIGHT OF WALL – TYP U.N.O.
4. ▨ – AS SHOWN ON PLAN INDICATES 600S162–54 STEEL STUD WALL. SEE PLAN FOR SIZES. STEEL STUDS SHALL BE SPACED AT 16" O.C. FOR LINTELS IN STEEL STUD WALLS, SEE DETAIL 24 – TYP U.N.O. SEE G.S.N., TYPICAL DETAILS, PLANS AND OTHER DETAILS FOR ADDITIONAL INFORMATION.
5. B1, B2, ETC – AS SHOWN ON PLAN INDICATES STEEL BEAM, SEE SCHEDULE THIS SHEET.
6. C1, C2, ETC – AS SHOWN ON PLAN INDICATES CONCRETE COLUMN, SEE SCHEDULE THIS THIS SHEET.
7. SC1, SC2, ETC – AS SHOWN ON PLAN INDICATES STEEL COLUMN, SEE SCHEDULE THIS SHEET.
8. ML1, ML2, ETC – AS SHOWN ON PLAN INDICATES MASONRY LINTEL, SEE SCHEDULE THIS SHEET, G.S.N. AND TYPICAL DETAILS.
9. W1, W2, ETC – AS SHOWN ON PLAN INDICATES CONCRETE WALL REINFORCING. SEE SCHEDULE THIS SHEET.
10. FOR MISCELLANEOUS LINTELS NOT SHOWN, SEE G.S.N. AND TYPICAL DETAILS. MASONRY CONTRACTOR SHALL COORDINATE WITH OTHER TRADES FOR EXACT SIZE AND LOCATION REQUIREMENTS.
11. MAS C.J. – AS SHOWN ON PLAN INDICATES MASONRY CONTROL JOINT IN MASONRY WALL AND/OR LINTEL, SEE G.S.N. AND TYPICAL DETAILS. JOINTS MAY BE SHOWN, BUT NOT NOTED ON THIS PLAN. SEE FOUNDATION PLAN FOR NOTED LOCATIONS.
12. CONCRETE TOPPING SHALL BE AS NOTED ON PLAN. VERIFY EXACT SIZE AND LOCATION OF DEPRESSED AND/OR RAISED SLABS WITH ARCH'L DRAWINGS. CONTROL JOINTS SHALL BE PER G.S.N. AND TYPICAL DETAILS. FOR ADDITIONAL INFORMATION, SEE G.S.N. AND DETAILS. CONTRACTOR TO VERIFY, AND BE RESPONSIBLE FOR VARIATIONS IN CONCRETE QUANTITY DUE TO CAMBER, CONSTRUCTION DEAD LOAD DEFLECTIONS, AND/OR TOLERANCES OF STRUCTURAL ELEMENTS (i.e. BEAMS, DECK, ETC.).
13. FOR CLARITY, DETAILS MAY SHOW ONLY ONE SIDE OF FRAMING CONDITIONS. ALL OPENINGS MAY NOT BE SHOWN ON THIS PLAN. FOR EXACT SIZE, NUMBER AND LOCATION OF OPENINGS, SEE ARCHITECTURAL, MECHANICAL, PLUMBING, ELECTRICAL, SPRINKLER AND THEIR RELATED DRAWINGS. FOR FRAMING AT OPENINGS, SEE TYPICAL DETAILS.
14. VERIFY EXACT SIZE, WEIGHT AND LOCATION OF EQUIPMENT AND SUPPORTS INDICATED ON PLAN WITH ARCHITECTURAL, MECHANICAL, PLUMBING, ELECTRICAL, SPRINKLER AND THEIR RELATED DRAWINGS. EQUIPMENT INDICATED ARE ONLY THOSE THAT EXCEED LOADS SPECIFIED IN THE G.S.N. FOR SUPPORT OF EQUIPMENT, SEE TYPICAL DETAILS AND OTHER TRADES.
15. CB1, CB2, ETC – AS SHOWN ON PLAN INDICATES CONCRETE BEAM, SEE SCHEDULE THIS SHEET.
16. SR1, SR2, ETC – AS SHOWN ON PLAN INDICATES STUD RAIL, SEE SCHEDULE THIS SHEET.

FINAL FOR CONSTRUCTION - 05/18/15

AWBREY
COOK
MCGILL
architects
1045 14th Street, Suite 100
San Diego, CA 92101-5701
Phone: 619 . 398 . 3480

ARCHITECTS:

THOMAS B. AWBREY	C 17578
CLIFFORD W. COOK	C 19705
SCOT W. McGILL	C 21059

CERTIFICATE NO. 42194
BRADY K. NOTBOHM
Date Signed 5/14/15
EXPIRES 03-31-17

Copyright © 2014
AWBREY COOK MCGILL ARCHITECTS
All ideas, designs, and arrangements indicated on these drawings are the property of AWBREY COOK MCGILL ARCHITECTS and are intended to be used in connection with this specific project only and shall not otherwise be used for any purpose whatsoever without the written consent of the architects. There shall be no changes or deviations from these drawings or the accompanying specifications without the written consent of the architects.

CONSULTANTS:

CARUSO
TURLEY
SCOTT
INC.
consulting structural engineers
1215 W. Rio Salado Pkwy
Suite 200
Tempe, Arizona 85281
(480) 774–1700
(480) 774–1701 FAX
www.ctsaz.com

ENGINEER: TRM/BKN – JOB NUMBER: 13–112

REVISIONS:

CONSTRUCTION BID SET	03/09/2015
2 INSTRUCTION BULLETIN 2	05/11/2015

THESE DRAWINGS/CALCULATIONS ARE CONSIDERED PRELIMINARY –NOT FOR CONSTRUCTION OR RECORDING UNLESS THE STRUCTURAL ENGINEER OF RECORD'S SEAL IS AFFIXED WITH WRITTEN SIGNATURE.

PROJECT:

MARRIOTT RESIDENCE INN
- COURTYARD @ LUHRS
A Development of - LUHRS CM, LLC
Phoenix, Arizona

DRAWN:	SMV
CHECKED:	BKN/TRM
DATE:	12/16/13
PROJECT NO.:	12–1601

SHEET TITLE:
LOW ROOF
FRAMING PLAN

SHEET NO.:
S1.9

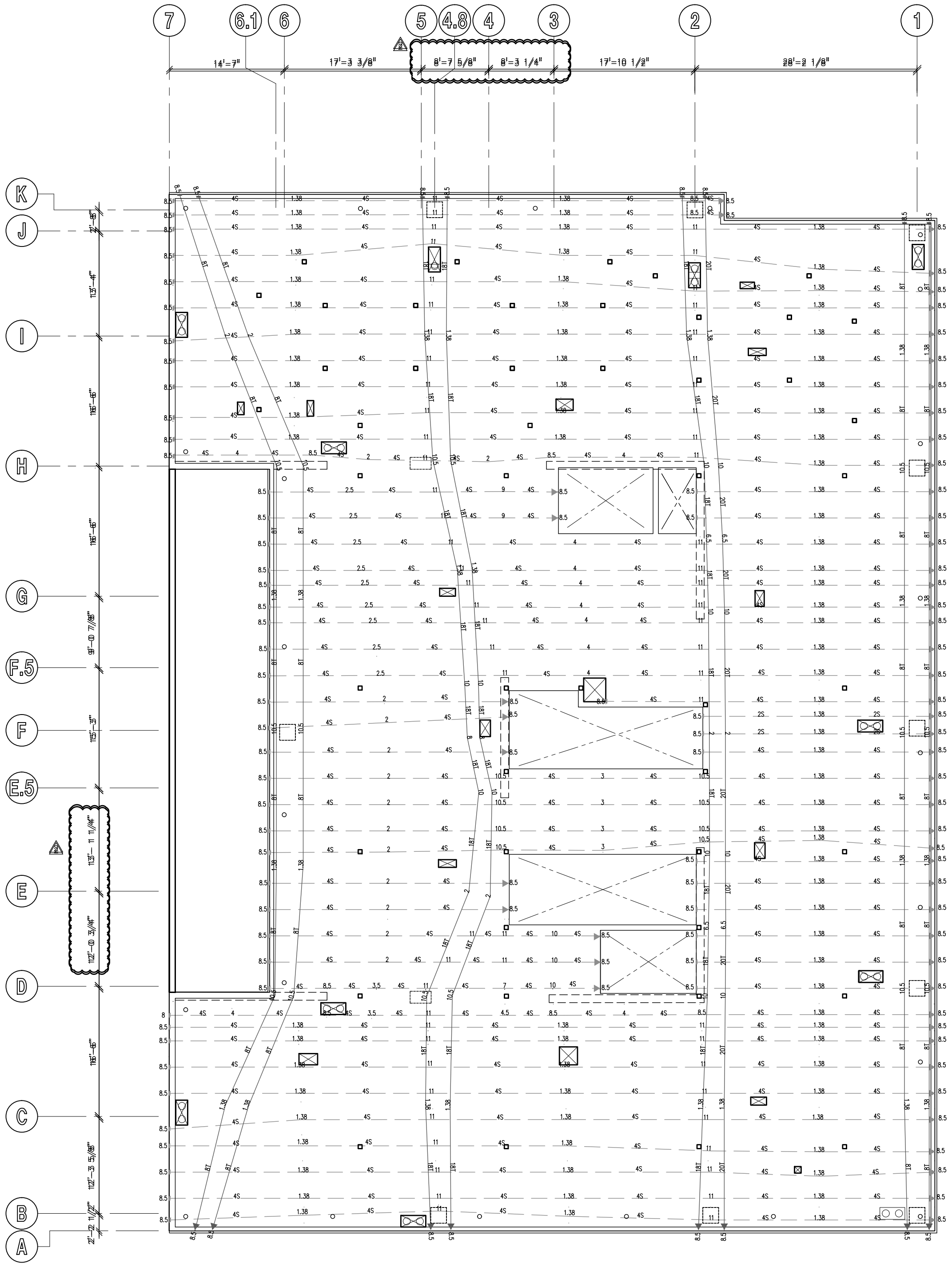

ROOF POST-TENSION PLAN

SCALE: 1/8" = 1'-0"

POST TENSION AND SLAB REINFORCING DESIGNATION

931-31

POST TENSION LINE LEGEND

4T◄———| DENOTES SINGLE PULL BANDED TENDONS.

4T◄———►4T DENOTES DOUBLE PULL BANDED TENDONS.

INDICATED NUMBER OF 1/2" DIA TENDONS FOR EFFECTIVE FORCE, SEE BELOW.

NOTE:
DIMENSIONS SHOWN ON PLAN INDICATE "DRAPE" OF TENDON FROM BOTTOM OF SLAB. INSTALL WITH 1" MIN CLEARANCE AT HIGH/LOW POSITIONING U.N.O.

EFFECTIVE FORCES:
1T = 26.8 kip, 2T = 53.5 kip, 3T = 80.3 kip, 4T = 107.0 kip
5T = 133.8 kip, 6T = 160.5 kip, 7T = 187.3 kip, 8T = 214.0 kip
9T = 245.8 kip, 10T = 267.5 kip, 11T = 294.3 kip, 12T = 321.0 kip
13T = 347.8 kip, 14T = 374.5 kip, 15T = 401.3 kip, 16T = 428.0 kip

MILD STEEL LINE LEGEND

12#5x16@6BM(EW)

TOTAL NUMBER OF BARS. IF NUMBER IS NOT DESIGNATED, REINFORCING IS CONTINUOUS IN DIRECTION SHOWN.

REINFORCING BAR SIZE.

LENGTH (FEET). IF LENGTH IS NOT DESIGNATED REINFORCING IS CONTINUOUS AND LAPPED OVER LINE OF SUPPORT. LENGTH DOES NOT INCLUDE STANDARD HOOK AT END OF BAR.

TYPICAL EACH WAY.

TM=TOPMOST, T=TOP, C= CENTERED, B= BOTTOM BM = BOTTOMMOST.
WHERE TWO LAYERS OF REINFORCING OCCUR IN SAME POSITION THE BOTTOMMOST OR TOPMOST LAYER SHALL BE FORMED WITH REINFORCING THAT HAS THE LARGEST AREA. REINFORCING SUPPORTING CANTILEVER CONDITION IS ALWAYS TOPMOST LAYER.

REINFORCING SPACING (INCHES).

FOR ADDITIONAL INFORMATION, SEE G.S.N.. TYPICAL DETAILS, PLAN AND DETAILS.

EXTENT OF REINFORCING

12#5x16@6BM

SINGLE ARROW DENOTES EXTENT OF REINFORCING. DOUBLE ARROW DENOTES REINFORCING IS CONTINUOUS TO EDGE OR UNLESS NOTED OTHERWISE.

NOTE: SEE G.S.N., TYPICAL DETAILS AND PLAN FOR ADDITIONAL INFORMATION.

CONCRETE SLAB NOTE

13-112

CONCRETE POST-TENSIONED SLAB THICKNESS BY LEVEL:
L1-L4 = 10" THICK (f'c=6 ksi AT 56 DAYS)
L5-L19 = 8" THICK (f'c=6 ksi AT 56 DAYS)
LR = 12" THICK (f'c=6 ksi AT 56 DAYS)

FINAL FOR CONSTRUCTION - 05/18/15

AWBREY
COOK
MCGILL
architects
1045 14th Street, Suite 100
San Diego, CA 92101-5701
Phone: 619 . 398 . 3480

ARCHITECTS:

THOMAS B. AWBREY	C 17578
CLIFFORD W. COOK	C 19705
SCOT W. McGILL	C 21059

Registered Professional Engineer (Structural)
CERTIFICATE NO.
42194
BRADY K.
NOTBOHM
Date Signed 5/14/15
ARIZONA, U.S.A.
EXPIRES 03-31-17

Copyright © 2014
AWBREY COOK MCGILL ARCHITECTS
All ideas, designs, and arrangements indicated on these drawings are the property of AWBREY COOK MCGILL ARCHITECTS and are intended to be used in connection with this specific project only and shall not otherwise be used for any purpose whatsoever without the written consent of the architects. There shall be no changes or deviations from these drawings or the accompanying specifications without the written consent of the architects.

CONSULTANTS:

CARUSO
TURLEY
SCOTT
INC.
consulting
structural
engineers
1215 W. Rio Salado Pkwy
Suite 200
Tempe, Arizona 85281
(480) 774-1700
(480) 774-1701 FAX
www.ctsaz.com

ENGINEER: TRM/BKN – JOB NUMBER: 13-112

REVISIONS:

CONSTRUCTION BID SET	03/09/2015
△2 INSTRUCTION BULLETIN 2	05/11/2015

PROJECT:

Residence Inn Marriott
COURTYARD Marriott
MARRIOTT RESIDENCE INN
- COURTYARD @ LUHRS
A Development of - LUHRS CM, LLC
Phoenix, Arizona

DRAWN:	SMV
CHECKED:	BKN/TRM
DATE:	12/16/13
PROJECT NO.:	12-1601

SHEET TITLE:
ROOF
POST-TENSION PLAN

SHEET NO.:
S1.9A

THESE DRAWINGS/CALCULATIONS ARE CONSIDERED PRELIMINARY –NOT FOR CONSTRUCTION OR RECORDING UNLESS THE STRUCTURAL ENGINEER OF RECORD'S SEAL IS AFFIXED WITH WRITTEN SIGNATURE.

AWBREY . COOK . McGILL . ARCHITECTS 1045 14th Street Suite 100, San Diego, California 92101.5701 Telephone 619.398.3480 Fax. 619.398.3488

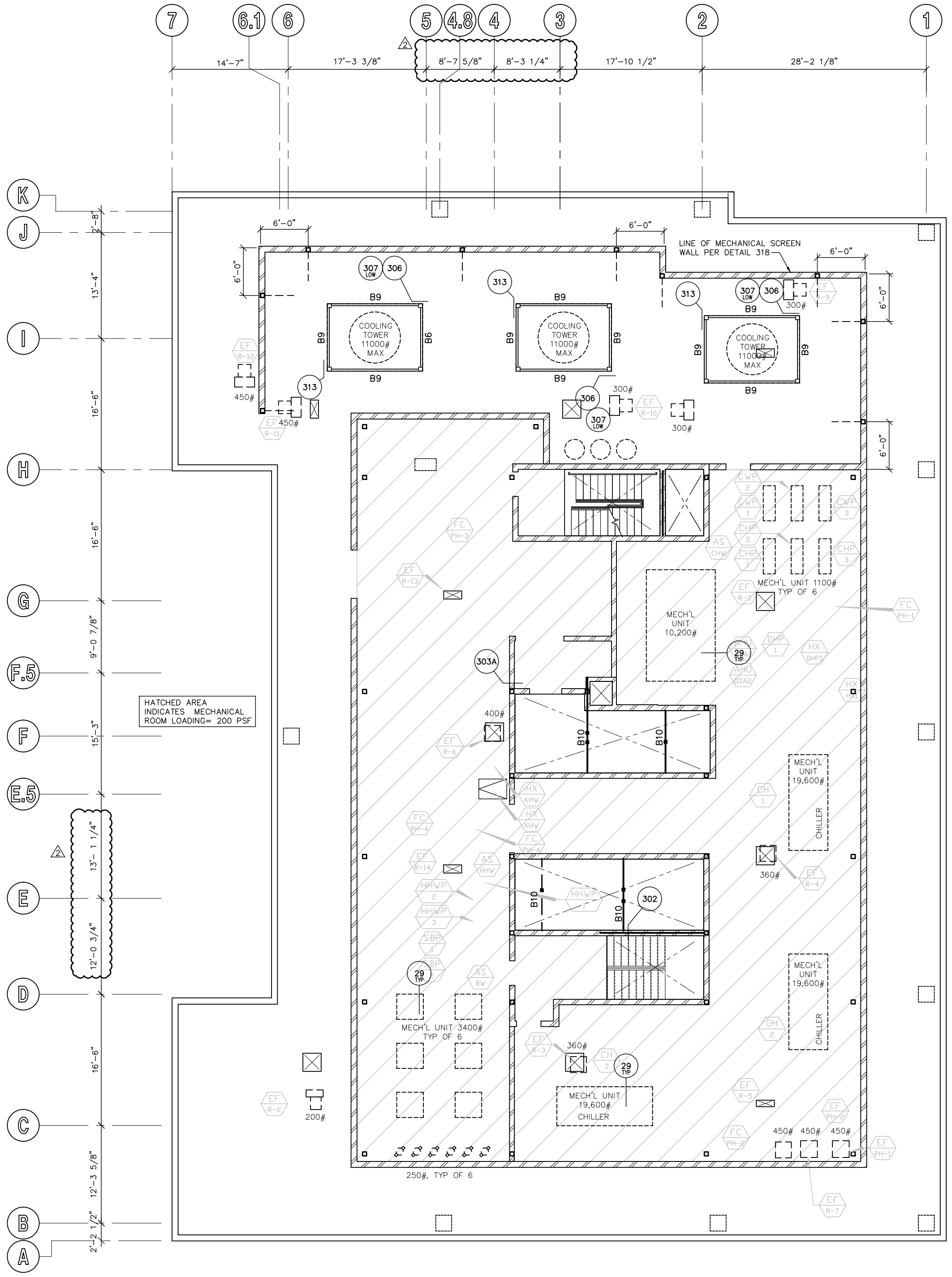
7
6.1
6
5
4.8
4
3
2
1
2
14'-7"
17'-3 3/8"
8'-7 5/8"
8'-3 1/4"
17'-10 1/2"
28'-2 1/8"
K
J
I
H
G
F.5
F
E.5
E
D
C
B
A
2'-8"
13'-4"
16'-6"
16'-6"
9'-0 7/8"
15'-3"
13'- 1 1/4"
12'-0 3/4"
16'-6"
12'-3 5/8"
2'-2 1/2"
6'-0"
LINE OF MECHANICAL SCREEN WALL PER DETAIL 318
307 LOW
306
313
303A
302
29 TYP
B6
B9
B10
COOLING TOWER 11000# MAX
300#
450#
400#
360#
200#
250#, TYP OF 6
MECH'L UNIT 10,200#
MECH'L UNIT 1100# TYP OF 6
MECH'L UNIT 19,600# CHILLER
MECH'L UNIT 3400# TYP OF 6
HATCHED AREA INDICATES MECHANICAL ROOM LOADING= 200 PSF
EF R-2
EF R-3
EF R-4
EF R-5
EF R-6
EF R-7
EF R-9
EF R-10
EF R-11
EF R-12
EF R-13
EF R-14
EF PH-1
EF PH-2
FC PH-1
FC PH-2
FC PH-3
FC PH-4
CWP 1
CWP 2
CWP 3
CHP 1
CHP 2
CHP 3
AS CHW
AS HHW
AS BW
AHU DSA2
DHP 1
HX DHP1
HX HX1
HX KHW
CH 1
CH 2
CH 3
HHWP 1
HHWP 2
HHWP 3
SBP 1

MECHANICAL PLATFORM FRAMING PLAN

SCALE: 1/8" = 1'-0"

CONCRETE SLAB NOTE

13-112

CONCRETE POST-TENSIONED SLAB THICKNESS BY LEVEL:

L1-L4 = 10" THICK (f'c=6 ksi AT 56 DAYS)
L5-L19 = 8" THICK (f'c=6 ksi AT 56 DAYS)
LR = 12" THICK (f'c=6 ksi AT 56 DAYS)

STEEL BEAM (B) SCHEDULE

919-02

NOTE:
1. FOR SIZE AND QUANTITY OF BOLTS, SEE TYPICAL BOLT DETAIL – U.N.O.
2. INDICATES POSITIVE BEAM CAMBER. WHERE "N/A" (NOT APPLICABLE) IS SHOWN, PROVIDE AS ROLLED CAMBER. INSTALL CROWN UP PER AISC.
3. FOR ADDITIONAL INFORMATION, SEE G.S.N., PLAN(s) AND DETAILS.

MARK	SIZE	CAMBER (SEE NOTE 2)	REMARKS
B1	W14 X 22	---	---
B2	W16 X 31	---	---
B3	W18 X 40	---	---
B4	W24 X 55	---	---
B5	W30 X 124	---	---
B6	HSS 12x6x1/4"	---	---
B7	HSS 12x10x3/8"	---	---
B8	C15 X 33.9	---	RADIUS BEAM PER ARCHITECTURAL AT B8A
B9	W8 X 31	---	---
B10	HSS 6x4x1/4"	---	---
B11	W12 X 35	---	---
B12	HSS 8x4x3/8"	---	RADIUS BEAM PER ARCHITECTURAL AT B12A

STEEL COLUMN (SC) SCHEDULE

910-01

NOTE: FOR ANCHOR BOLT PATTERN, SEE TYPICAL DETAIL 13

MARK	SIZE	BASE CONNECTION	BOLT PATTERN AND/OR REMARKS
SC1	HSS 6x6x1/4"	3/4" X 12" X 12" STEEL PLATE WITH 4-3/4" DIA ANCHOR BOLTS	---
SC2	HSS 6x6x1/4"	3/4" X 12" X 18" STEEL PLATE WITH 6-3/4" DIA ANCHOR BOLTS	SEE DETAIL 311
SC3	HSS 6x6x3/8"	3/4" X 12" X 12" STEEL PLATE WITH 4-3/4" DIA ANCHOR BOLTS	ELEV. RAIL SUPPORT COLUMN
SC4	HSS 8x8x3/8"	3/4" X 12" X 12" STEEL PLATE WITH 4-3/4" DIA ANCHOR BOLTS	---

PLAN NOTES – TYP U.N.O.:

1. **VERIFY ALL DIMENSIONS WITH ARCHITECTURAL DRAWINGS AND FIELD CONDITIONS. BUILDING DIMENSIONS, WHERE SHOWN, WERE PROVIDED BY THE ARCHITECT AND SHALL BE VERIFIED WITH SAME PRIOR TO PROCEEDING WITH THE WORK.**
2. SCHEDULED MARK DESIGNATIONS ARE TYPICAL TO THE PROJECT AND MAY NOT NECESSARILY BE FOUND ON THIS PLAN.
3. ▨ – AS SHOWN ON PLAN INDICATES 8" MASONRY WALL, SEE G.S.N., TYPICAL DETAILS, PLANS AND DETAILS FOR ADDITIONAL INFORMATION. ALL REINFORCING SHOWN AND/OR NOTED SHALL BE FULL HEIGHT OF WALL – TYP U.N.O.
4. ▨ – AS SHOWN ON PLAN INDICATES 600S162-54 STEEL STUD WALL. SEE PLAN FOR SIZES. STEEL STUDS SHALL BE SPACED AT 16" O.C. FOR LINTELS IN STEEL STUD WALLS, SEE DETAIL 24 – TYP U.N.O. SEE G.S.N., TYPICAL DETAILS, PLANS AND OTHER DETAILS FOR ADDITIONAL INFORMATION.
5. B1, B2, ETC – AS SHOWN ON PLAN INDICATES STEEL BEAM, SEE SCHEDULE THIS SHEET.
6. C1, C2, ETC – AS SHOWN ON PLAN INDICATES CONCRETE COLUMN, SEE SCHEDULE THIS THIS SHEET.
7. SC1, SC2, ETC – AS SHOWN ON PLAN INDICATES STEEL COLUMN, SEE SCHEDULE THIS SHEET.
8. ML1, ML2, ETC – AS SHOWN ON PLAN INDICATES MASONRY LINTEL, SEE SCHEDULE THIS SHEET, G.S.N. AND TYPICAL DETAILS.
9. W1, W2, ETC – AS SHOWN ON PLAN INDICATES CONCRETE WALL REINFORCING. SEE SCHEDULE THIS SHEET.
10. FOR MISCELLANEOUS LINTELS NOT SHOWN, SEE G.S.N. AND TYPICAL DETAILS. MASONRY CONTRACTOR SHALL COORDINATE WITH OTHER TRADES FOR EXACT SIZE AND LOCATION REQUIREMENTS.
11. MAS C.J. – AS SHOWN ON PLAN INDICATES MASONRY CONTROL JOINT IN MASONRY WALL AND/OR LINTEL, SEE G.S.N. AND TYPICAL DETAILS. JOINTS MAY BE SHOWN, BUT NOT NOTED ON THIS PLAN. SEE FOUNDATION PLAN FOR NOTED LOCATIONS.
12. CONCRETE TOPPING SHALL BE AS NOTED ON PLAN. VERIFY EXACT SIZE AND LOCATION OF DEPRESSED AND/OR RAISED SLABS WITH ARCH'L DRAWINGS. CONTROL JOINTS SHALL BE PER G.S.N. AND TYPICAL DETAILS. FOR ADDITIONAL INFORMATION, SEE G.S.N. AND DETAILS. CONTRACTOR TO VERIFY, AND BE RESPONSIBLE FOR VARIATIONS IN CONCRETE QUANTITY DUE TO CAMBER, CONSTRUCTION DEAD LOAD DEFLECTIONS, AND/OR TOLERANCES OF STRUCTURAL ELEMENTS (i.e. BEAMS, DECK, ETC.).
13. FOR CLARITY, DETAILS MAY SHOW ONLY ONE SIDE OF FRAMING CONDITIONS. ALL OPENINGS MAY NOT BE SHOWN ON THIS PLAN. FOR EXACT SIZE, NUMBER AND LOCATION OF OPENINGS, SEE ARCHITECTURAL, MECHANICAL, PLUMBING, ELECTRICAL, SPRINKLER AND THEIR RELATED DRAWINGS. FOR FRAMING AT OPENINGS, SEE TYPICAL DETAILS.
14. VERIFY EXACT SIZE, WEIGHT AND LOCATION OF EQUIPMENT AND SUPPORTS INDICATED ON PLAN WITH ARCHITECTURAL, MECHANICAL, PLUMBING, ELECTRICAL, SPRINKLER AND THEIR RELATED DRAWINGS. EQUIPMENT INDICATED ARE ONLY THOSE THAT EXCEED LOADS SPECIFIED IN THE G.S.N. FOR SUPPORT OF EQUIPMENT, SEE TYPICAL DETAILS AND OTHER TRADES.
15. CB1, CB2, ETC – AS SHOWN ON PLAN INDICATES CONCRETE BEAM, SEE SCHEDULE THIS SHEET.
16. SR1, SR2, ETC – AS SHOWN ON PLAN INDICATES STUD RAIL, SEE SCHEDULE THIS SHEET.

AWBREY
COOK
MCGILL
architects
1045 14th Street, Suite 100
San Diego, CA 92101-5701
Phone: 619 . 398 . 3480

ARCHITECTS:
THOMAS B. AWBREY C 17578
CLIFFORD W. COOK C 19705
SCOT W. McGILL C 21059

42194
BRADY K.
NOTBOHM
5/14/15
EXPIRES 03-31-17

Copyright © 2014
AWBREY COOK MCGILL ARCHITECTS
All ideas, designs, and arrangements indicated on these drawings are the property of AWBREY COOK MCGILL ARCHITECTS and are intended to be used in connection with this specific project only and shall not otherwise be used for any purpose whatsoever without the written consent of the architects. There shall be no changes or deviations from these drawings or the accompanying specifications without the written consent of the architects.

CONSULTANTS:

CARUSO
TURLEY
SCOTT
INC.
consulting
structural
engineers
1215 W. Rio Salado Pkwy
Suite 200
Tempe, Arizona 85281
(480) 774-1700
(480) 774-1701 FAX
www.ctsaz.com

ENGINEER: TRM/BKN – JOB NUMBER: 13-112

REVISIONS:

CONSTRUCTION BID SET	03/09/2015
2 INSTRUCTION BULLETIN 2	05/11/2015

PROJECT:

MARRIOTT RESIDENCE INN
- COURTYARD @ LUHRS
A Development of - LUHRS CM, LLC
Phoenix, Arizona

DRAWN:	SMV
CHECKED:	BKN/TRM
DATE:	12/16/13
PROJECT NO.:	12-1601

SHEET TITLE:
MECHANICAL PLATFORM FRAMING PLAN

SHEET NO.:
S1.10

THESE DRAWINGS/CALCULATIONS ARE CONSIDERED PRELIMINARY –NOT FOR CONSTRUCTION OR RECORDING UNLESS THE STRUCTURAL ENGINEER OF RECORD'S SEAL IS AFFIXED WITH WRITTEN SIGNATURE.

FINAL FOR CONSTRUCTION - 05/18/15

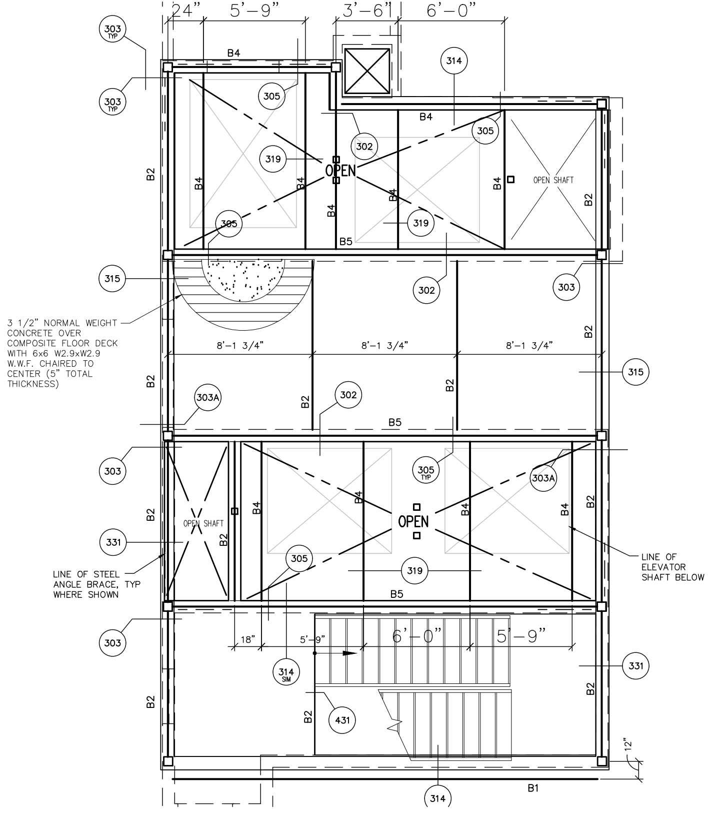
24"
5'-9"
3'-6"
6'-0"
B4
B2
B5
OPEN
OPEN SHAFT
3 1/2" NORMAL WEIGHT CONCRETE OVER COMPOSITE FLOOR DECK WITH 6x6 W2.9xW2.9 W.W.F. CHAIRED TO CENTER (5" TOTAL THICKNESS)
8'-1 3/4"
LINE OF STEEL ANGLE BRACE, TYP WHERE SHOWN
LINE OF ELEVATOR SHAFT BELOW
18"
5'-9"
6'-0"
B1
303
305
302
314
315
319
303A
331
431
TYP

ENLARGED PENTHOUSE FRAMING PLAN

SCALE: 1/4" = 1'-0"

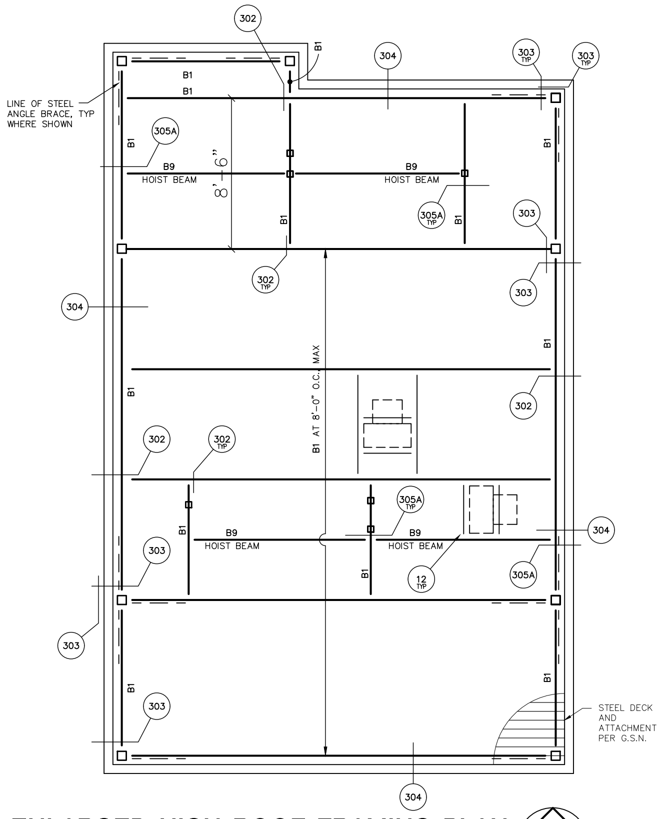
302
304
303
B1
B9
HOIST BEAM
LINE OF STEEL ANGLE BRACE, TYP WHERE SHOWN
305A
8'-6"
B1 AT 8'-0" O.C. MAX
STEEL DECK AND ATTACHMENT PER G.S.N.
12
TYP

ENLARGED HIGH ROOF FRAMING PLAN

SCALE: 1/4" = 1'-0"

TOP OF PARAPET = 3'-0" ABOVE ROOF DECK
ROOF ELEVATION = 241'-6"

STEEL COLUMN (SC) SCHEDULE

910-01

NOTE: FOR ANCHOR BOLT PATTERN, SEE TYPICAL DETAIL 13

MARK	SIZE	BASE CONNECTION	BOLT PATTERN AND/OR REMARKS
SC1	HSS 6x6x1/4"	3/4" X 12" X 12" STEEL PLATE WITH 4–3/4" DIA ANCHOR BOLTS	---
SC2	HSS 6x6x1/4"	3/4" X 12" X 18" STEEL PLATE WITH 6–3/4" DIA ANCHOR BOLTS	SEE DETAIL 311
SC3	HSS 6x6x3/8"	3/4" X 12" X 12" STEEL PLATE WITH 4–3/4" DIA ANCHOR BOLTS	ELEV. RAIL SUPPORT COLUMN
SC4	HSS 8x8x3/8"	3/4" X 12" X 12" STEEL PLATE WITH 4–3/4" DIA ANCHOR BOLTS	---

STEEL BEAM (B) SCHEDULE

919-02

NOTE:
1. FOR SIZE AND QUANTITY OF BOLTS, SEE TYPICAL BOLT DETAIL – U.N.O.
2. INDICATES POSITIVE BEAM CAMBER. WHERE "N/A" (NOT APPLICABLE) IS SHOWN, PROVIDE AS ROLLED CAMBER. INSTALL CROWN UP PER AISC.
3. FOR ADDITIONAL INFORMATION, SEE G.S.N., PLAN(s) AND DETAILS.

MARK	SIZE	CAMBER (SEE NOTE 2)	REMARKS
B1	W14 X 22	---	---
B2	W16 X 31	---	---
B3	W18 X 40	---	---
B4	W24 X 55	---	---
B5	W30 X 124	---	---
B6	HSS 12x6x1/4"	---	---
B7	HSS 12x10x3/8"	---	---
B8	C15 X 33.9	---	RADIUS BEAM PER ARCHITECTURAL AT B8A
B9	W8 X 31	---	---
B10	HSS 6x4x1/4"	---	---
B11	W12 X 35	---	---
B12	HSS 8x4x3/8"	---	RADIUS BEAM PER ARCHITECTURAL AT B12A

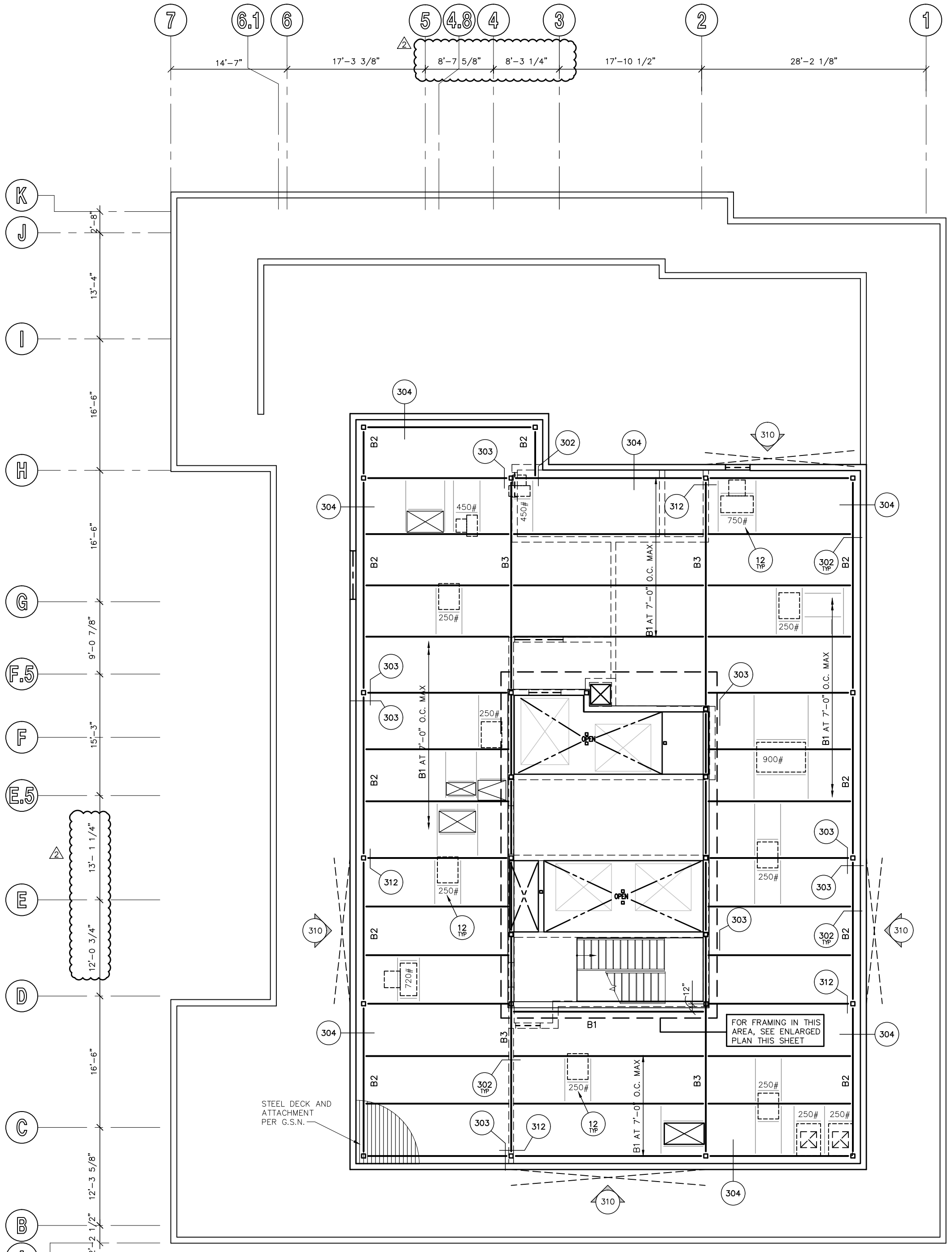
7
6.1
6
5
4.8
4
3
2
1
14'-7"
17'-3 3/8"
8'-7 5/8"
8'-3 1/4"
17'-10 1/2"
28'-2 1/8"
K
J
I
H
G
F.5
F
E.5
E
D
C
B
A
2'-8"
13'-4"
16'-6"
9'-0 7/8"
15'-3"
13'-1 1/4"
12'-0 3/4"
12'-3 5/8"
2'-2 1/2"
304
302
303
310
312
B1
B2
B3
450#
750#
250#
900#
720#
12
TYP
B1 AT 7'-0" O.C. MAX
OPEN
FOR FRAMING IN THIS AREA, SEE ENLARGED PLAN THIS SHEET
STEEL DECK AND ATTACHMENT PER G.S.N.
12"

TOP OF PARAPET = 3'-6" ABOVE ROOF DECK
ROOF ELEVATION = 233'-0"

PENTHOUSE FRAMING PLAN

SCALE: 1/8" = 1'-0"

PLAN NOTES – TYP U.N.O.:

1. **VERIFY ALL DIMENSIONS WITH ARCHITECTURAL DRAWINGS AND FIELD CONDITIONS. BUILDING DIMENSIONS, WHERE SHOWN, WERE PROVIDED BY THE ARCHITECT AND SHALL BE VERIFIED WITH SAME PRIOR TO PROCEEDING WITH THE WORK.**
2. SCHEDULED MARK DESIGNATIONS ARE TYPICAL TO THE PROJECT AND MAY NOT NECESSARILY BE FOUND ON THIS PLAN.
3. ▨ – AS SHOWN ON PLAN INDICATES 8" MASONRY WALL, SEE G.S.N., TYPICAL DETAILS, PLANS AND DETAILS FOR ADDITIONAL INFORMATION. ALL REINFORCING SHOWN AND/OR NOTED SHALL BE FULL HEIGHT OF WALL – TYP U.N.O.
4. ▨ – AS SHOWN ON PLAN INDICATES 600S162–54 STEEL STUD WALL. SEE PLAN FOR SIZES. STEEL STUDS SHALL BE SPACED AT 16" O.C. FOR LINTELS IN STEEL STUD WALLS, SEE DETAIL 24 – TYP U.N.O. SEE G.S.N., TYPICAL DETAILS, PLANS AND OTHER DETAILS FOR ADDITIONAL INFORMATION.
5. B1, B2, ETC – AS SHOWN ON PLAN INDICATES STEEL BEAM, SEE SCHEDULE THIS SHEET.
6. C1, C2, ETC – AS SHOWN ON PLAN INDICATES CONCRETE COLUMN, SEE SCHEDULE THIS THIS SHEET.
7. SC1, SC2, ETC – AS SHOWN ON PLAN INDICATES STEEL COLUMN, SEE SCHEDULE THIS SHEET.
8. ML1, ML2, ETC – AS SHOWN ON PLAN INDICATES MASONRY LINTEL, SEE SCHEDULE THIS SHEET, G.S.N. AND TYPICAL DETAILS.
9. W1, W2, ETC – AS SHOWN ON PLAN INDICATES CONCRETE WALL REINFORCING. SEE SCHEDULE THIS SHEET.
10. FOR MISCELLANEOUS LINTELS NOT SHOWN, SEE G.S.N. AND TYPICAL DETAILS. MASONRY CONTRACTOR SHALL COORDINATE WITH OTHER TRADES FOR EXACT SIZE AND LOCATION REQUIREMENTS.
11. MAS C.J. – AS SHOWN ON PLAN INDICATES MASONRY CONTROL JOINT IN MASONRY WALL AND/OR LINTEL, SEE G.S.N. AND TYPICAL DETAILS. JOINTS MAY BE SHOWN, BUT NOT NOTED ON THIS PLAN. SEE FOUNDATION PLAN FOR NOTED LOCATIONS.
12. CONCRETE TOPPING SHALL BE AS NOTED ON PLAN. VERIFY EXACT SIZE AND LOCATION OF DEPRESSED AND/OR RAISED SLABS WITH ARCH'L DRAWINGS. CONTROL JOINTS SHALL BE PER G.S.N. AND TYPICAL DETAILS. FOR ADDITIONAL INFORMATION, SEE G.S.N. AND DETAILS. CONTRACTOR TO VERIFY, AND BE RESPONSIBLE FOR VARIATIONS IN CONCRETE QUANTITY DUE TO CAMBER, CONSTRUCTION DEAD LOAD DEFLECTIONS, AND/OR TOLERANCES OF STRUCTURAL ELEMENTS (i.e. BEAMS, DECK, ETC.).
13. FOR CLARITY, DETAILS MAY SHOW ONLY ONE SIDE OF FRAMING CONDITIONS. ALL OPENINGS MAY NOT BE SHOWN ON THIS PLAN. FOR EXACT SIZE, NUMBER AND LOCATION OF OPENINGS, SEE ARCHITECTURAL, MECHANICAL, PLUMBING, ELECTRICAL, SPRINKLER AND THEIR RELATED DRAWINGS. FOR FRAMING AT OPENINGS, SEE TYPICAL DETAILS.
14. VERIFY EXACT SIZE, WEIGHT AND LOCATION OF EQUIPMENT AND SUPPORTS INDICATED ON PLAN WITH ARCHITECTURAL, MECHANICAL, PLUMBING, ELECTRICAL, SPRINKLER AND THEIR RELATED DRAWINGS. EQUIPMENT INDICATED ARE ONLY THOSE THAT EXCEED LOADS SPECIFIED IN THE G.S.N. FOR SUPPORT OF EQUIPMENT, SEE TYPICAL DETAILS AND OTHER TRADES.
15. CB1, CB2, ETC – AS SHOWN ON PLAN INDICATES CONCRETE BEAM, SEE SCHEDULE THIS SHEET.
16. SR1, SR2, ETC – AS SHOWN ON PLAN INDICATES STUD RAIL, SEE SCHEDULE THIS SHEET.

FINAL FOR CONSTRUCTION - 05/18/15

THESE DRAWINGS/CALCULATIONS ARE CONSIDERED PRELIMINARY –NOT FOR CONSTRUCTION OR RECORDING UNLESS THE STRUCTURAL ENGINEER OF RECORD'S SEAL IS AFFIXED WITH WRITTEN SIGNATURE.

AWBREY
COOK
MCGILL
architects
1045 14th Street, Suite 100
San Diego, CA 92101-5701
Phone: 619 . 398 . 3480

ARCHITECTS:

THOMAS B. AWBREY	C 17578
CLIFFORD W. COOK	C 19705
SCOT W. McGILL	C 21059

Registered Professional Engineer (Structural)
CERTIFICATE NO. 42194
BRADY K. NOTBOHM
Date Signed 5/14/15
ARIZONA, U.S.A.
EXPIRES 03-31-17

Copyright © 2014
AWBREY COOK MCGILL ARCHITECTS
All ideas, designs, and arrangements indicated on these drawings are the property of AWBREY COOK MCGILL ARCHITECTS and are intended to be used in connection with this specific project only and shall not otherwise be used for any purpose whatsoever without the written consent of the architects. There shall be no changes or deviations from these drawings or the accompanying specifications without the written consent of the architects.

CONSULTANTS:

CARUSO
TURLEY
SCOTT
INC.
consulting
structural
engineers
1215 W. Rio Salado Pkwy
Suite 200
Tempe, Arizona 85281
(480) 774-1700
(480) 774-1701 FAX
www.ctsaz.com

ENGINEER: TRM/BKN – JOB NUMBER: 13–112

REVISIONS:

CONSTRUCTION BID SET	03/09/2015
△2 INSTRUCTION BULLETIN 2	05/11/2015

PROJECT:

MARRIOTT RESIDENCE INN
- COURTYARD @ LUHRS
A Development of - LUHRS CM, LLC
Phoenix, Arizona

DRAWN:	SMV
CHECKED:	BKN/TRM
DATE:	12/16/13
PROJECT NO.:	12–1601

SHEET TITLE:
PENTHOUSE / HIGH ROOF FRAMING PLANS

SHEET NO.:
S1.11

AWBREY . COOK . McGILL . ARCHITECTS 1045 14th Street Suite 100, San Diego, California 92101.5701 Telephone 619.398.3480 Fax. 619.398.3488

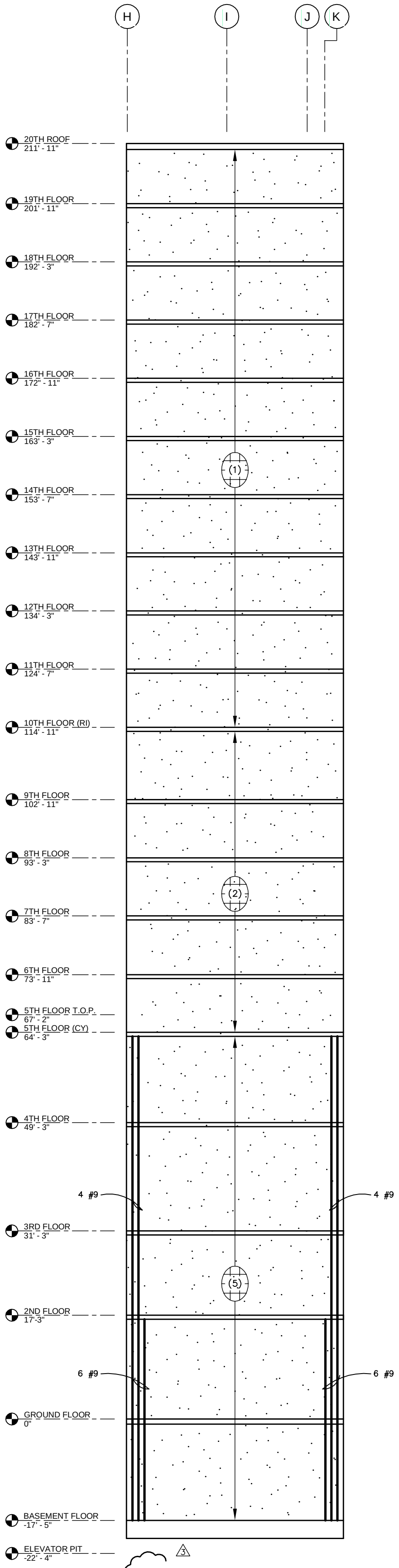
H
I
J
K
20TH ROOF 211' - 11"
19TH FLOOR 201' - 11"
18TH FLOOR 192' - 3"
17TH FLOOR 182' - 7"
16TH FLOOR 172" - 11"
15TH FLOOR 163' - 3"
14TH FLOOR 153' - 7"
13TH FLOOR 143' - 11"
12TH FLOOR 134' - 3"
11TH FLOOR 124' - 7"
10TH FLOOR (RI) 114' - 11"
9TH FLOOR 102' - 11"
8TH FLOOR 93' - 3"
7TH FLOOR 83' - 7"
6TH FLOOR 73' - 11"
5TH FLOOR T.O.P. 67' - 2"
5TH FLOOR (CY) 64' - 3"
4TH FLOOR 49' - 3"
3RD FLOOR 31' - 3"
2ND FLOOR 17'-3"
GROUND FLOOR 0"
BASEMENT FLOOR -17' - 5"
ELEVATOR PIT -22' - 4"
(1)
(2)
(5)
4 #9
4 #9
6 #9
6 #9
3

PANEL 1
3/32" = 1'-0"

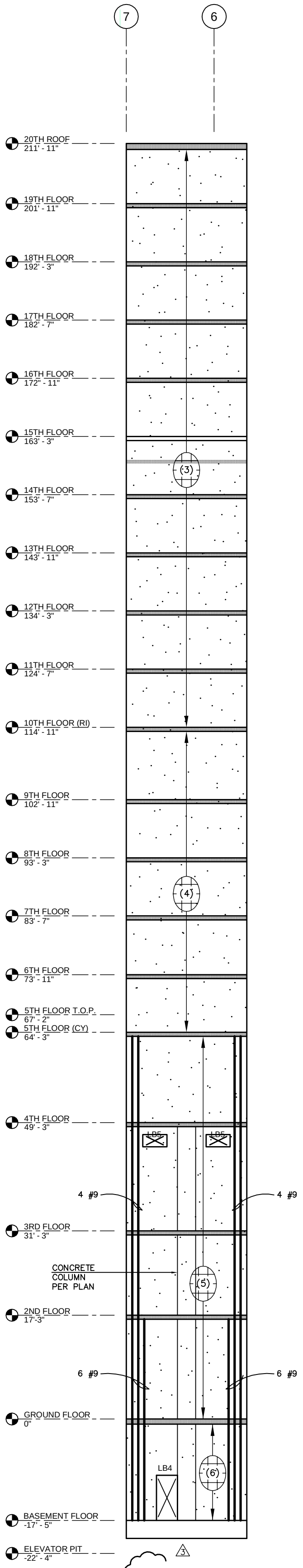
7
6
20TH ROOF 211' - 11"
19TH FLOOR 201' - 11"
18TH FLOOR 192' - 3"
17TH FLOOR 182' - 7"
16TH FLOOR 172' - 11"
15TH FLOOR 163' - 3"
14TH FLOOR 153' - 7"
13TH FLOOR 143' - 11"
12TH FLOOR 134' - 3"
11TH FLOOR 124' - 7"
10TH FLOOR (RI) 114' - 11"
9TH FLOOR 102' - 11"
8TH FLOOR 93' - 3"
7TH FLOOR 83' - 7"
6TH FLOOR 73' - 11"
5TH FLOOR T.O.P. 67' - 2"
5TH FLOOR (CY) 64' - 3"
4TH FLOOR 49' - 3"
3RD FLOOR 31' - 3"
2ND FLOOR 17'-3"
GROUND FLOOR 0"
BASEMENT FLOOR -17' - 5"
ELEVATOR PIT -22' - 4"
(3)
(4)
(5)
(6)
LB5
LB5
LB4
CONCRETE COLUMN PER PLAN
4 #9
4 #9
6 #9
6 #9
3

PANEL 2
3/32" = 1'-0"

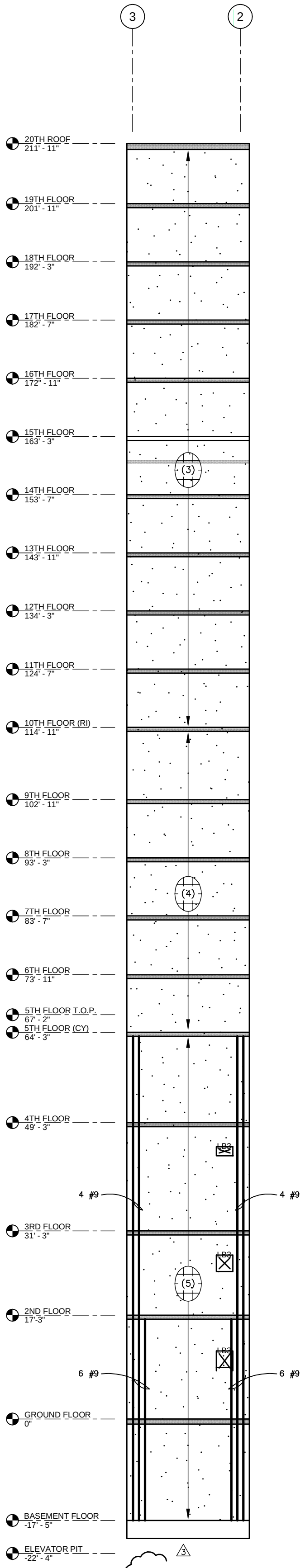
3
2
20TH ROOF 211' - 11"
19TH FLOOR 201' - 11"
18TH FLOOR 192' - 3"
17TH FLOOR 182' - 7"
16TH FLOOR 172' - 11"
15TH FLOOR 163' - 3"
14TH FLOOR 153' - 7"
13TH FLOOR 143' - 11"
12TH FLOOR 134' - 3"
11TH FLOOR 124' - 7"
10TH FLOOR (RI) 114' - 11"
9TH FLOOR 102' - 11"
8TH FLOOR 93' - 3"
7TH FLOOR 83' - 7"
6TH FLOOR 73' - 11"
5TH FLOOR T.O.P. 67' - 2"
5TH FLOOR (CY) 64' - 3"
4TH FLOOR 49' - 3"
3RD FLOOR 31' - 3"
2ND FLOOR 17'-3"
GROUND FLOOR 0"
BASEMENT FLOOR -17' - 5"
ELEVATOR PIT -22' - 4"
(3)
(4)
(5)
4 #9
4 #9
6 #9
6 #9
3

PANEL 3
3/32" = 1'-0"

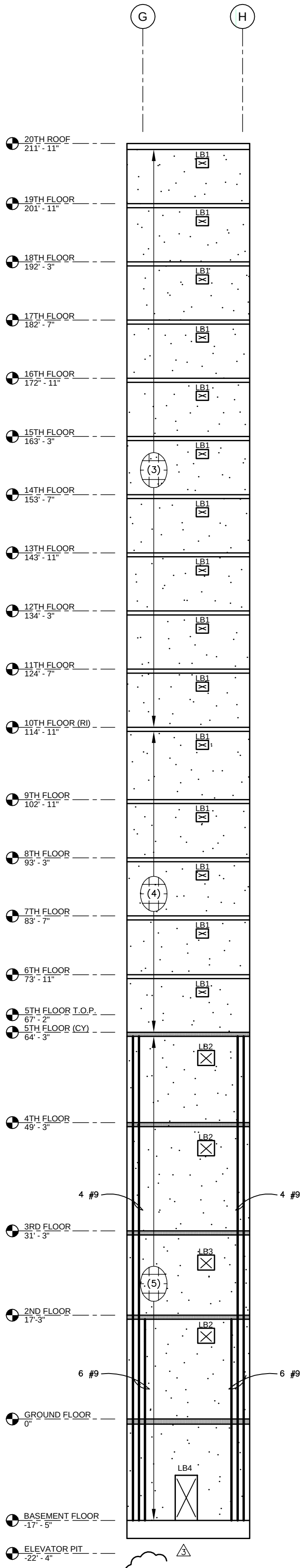
G
H
20TH ROOF 211' - 11"
19TH FLOOR 201' - 11"
18TH FLOOR 192' - 3"
17TH FLOOR 182' - 7"
16TH FLOOR 172' - 11"
15TH FLOOR 163' - 3"
14TH FLOOR 153' - 7"
13TH FLOOR 143' - 11"
12TH FLOOR 134' - 3"
11TH FLOOR 124' - 7"
10TH FLOOR (RI) 114' - 11"
9TH FLOOR 102' - 11"
8TH FLOOR 93' - 3"
7TH FLOOR 83' - 7"
6TH FLOOR 73' - 11"
5TH FLOOR T.O.P. 67' - 2"
5TH FLOOR (CY) 64' - 3"
4TH FLOOR 49' - 3"
3RD FLOOR 31' - 3"
2ND FLOOR 17'-3"
GROUND FLOOR 0"
BASEMENT FLOOR -17' - 5"
ELEVATOR PIT -22' - 4"
LB1
LB2
LB2
LB3
LB2
LB4
(3)
(4)
(5)
4 #9
4 #9
6 #9
6 #9
3

PANEL 4
3/32" = 1'-0"

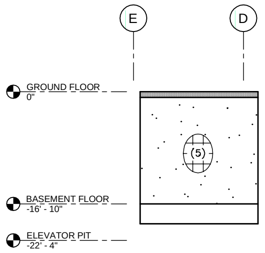
E
D
GROUND FLOOR 0"
BASEMENT FLOOR -16' - 10"
ELEVATOR PIT -22' - 4"
(5)

PANEL 10
3/32" = 1'-0"

CONCRETE SHEAR WALL SCHEDULE

13–112

MARK	WALL THICKNESS	CONCRETE STRENGTH	REINFORCING	REMARKS
(1)	8"	6 KSI	#5 VERT AT 16" O.C. CENTERED #5 HORIZ AT 16" O.C. CENTERED	---
(2)	8"	6 KSI	#5 VERT AT 12" O.C. CENTERED #5 HORIZ AT 16" O.C. CENTERED	---
(3)	12"	6 KSI	#5 VERT AT 16" O.C. EACH FACE #5 HORIZ AT 16" O.C. EACH FACE	---
(4)	12"	6 KSI	#5 VERT AT 12" O.C. EACH FACE #5 HORIZ AT 16" O.C. EACH FACE	---
(5)	16"	7 KSI	#6 VERT AT 12" O.C. EACH FACE #6 HORIZ AT 12" O.C. EACH FACE	---
(6)	16"	7 KSI	#9 VERT AT 12" O.C. EACH FACE #6 HORIZ AT 12" O.C. EACH FACE	---
(7)	12"	6 KSI	#5 VERT AT 8" O.C. EACH FACE #5 HORIZ AT 16" O.C. EACH FACE	---

CONCRETE SHEAR WALL NOTES:

1. WALL ELEVATIONS ARE FOR SHOWING REQUIRED REINFORCING ONLY. CONTRACTOR SHALL BE RESPONSIBLE FOR LAYING OUT WALLS TO PROPER DIMENSIONS WITH REQUIRED REINFORCING AND OPENINGS REQUIRED FOR EACH WALL.

2. ALL WALL ELEVATIONS ARE AS VIEWED FROM THE EXTERIOR SIDE OF THE BUILDING EXCEPT WHERE NOTED OTHERWISE. SEE ARCHITECTURAL ELEVATIONS FOR LOCATION AND TYPE OF FINISHES OR COVER.

3. DO NOT SCALE ANY WALL ELEVATIONS SHOWN HEREIN. REFER TO PLANS AND WALL ELEVATIONS FOR ALL DIMENSIONS. WHERE DIMENSIONS ARE SHOWN, IT IS INTENDED ONLY AS AN AID TO THE CONTRACTOR IN PROVIDING SHOP DRAWINGS. CONRACTOR SHALL BE RESPONSIBLE FOR VERIFICATION OF ALL DIMENSIONS WITH ARCHITECTURAL DRAWINGS PRIOR TO START OF CONSTRUCTION. RESOLVE ANY DISCREPANCY WITH THE ARCHITECT

4. DIMENSIONS FROM BUILDING FINISHED FLOORS TO BOTTOM OF WALL TO BE GOVERNED BY THE APPROPRIATELY FLAGGED FOUNDATION DETAIL FOR EACH PARTICULAR LOCATION, USED IN CONJUNCTION WITH FINISHED GRADES ADJACENT TO BUILDINGS SHOWN ON CIVIL ENGINEERING DRAWINGS. VERIFY WITH FLAGGED DETAILS ON ARCHITECTURAL DRAWINGS.

5. ALL WALL OPENINGS MAY NOT NECESSARILY BE SHOWN ON THE ELEVATIONS. FOR EXACT SIZE, NUMBER AND LOCATION OF OPENINGS, SEE ARCHITECTURAL, MECHANICAL, PLUMBING AND ELECTRICAL DRAWINGS. RESOLVE ANY DISCREPANCY THRU THE ARCHITECT.

6. SEE PLANS, ELEVATIONS, SECTIONS, NOTES AND/OR DETAILS FOR ALL HEIGHTS, OPENINGS, EMBEDDED ITEMS, ETC.

7. PROVIDE 3/4" X 3/4" CHAMFERS AT ALL EXPOSED WALL EDGES AND CORNERS, UNLESS NOTED OTHERWISE.

8. ALL "TYPICAL REINFORCING" OCCURS THROUGHOUT THE WALL EXCEPT WHERE "SPECIAL REINFORCING" IS SHOWN IN LIEU OF TYPICAL REINFORCING. SEE WALL ELEVATIONS AND NOTES.

9. VERTICAL REINFORCING TO BE CENTERED IN DESIGN WALL THICKNESS U.N.O. THE EDGE CLEARANCE OF ALL PERIMETER REINFORCING AT WALLS AND OPENINGS SHALL BE AS SHOWN IN DETAILS. ALL DOUBLE REINFORCING SHALL BE AS SHOWN IN DETAILS.

10. REINFORCING STEEL SHALL BE ASTM–A615 GRADE 60 U.N.O.

11. ALL REINFORCING SHOWN WELDED IN DETAILS SHALL BE ASTM A706 GRADE 60 USING E90 SERIES LOW HYDROGEN RODS FOR WELDING.

12. ALL HEADED STUDS SHALL BE PER GENERAL STRUCTURAL NOTES.

WALL ELEVATION LEGEND:

⊕ (1)	INDICATES TYPICAL WALL REINFORCING UNLESS SPECIFICALLY NOTED OTHERWISE.
↔ (2)	INDICATES SPECIAL WALL REINFORCING IN LIEU OF TYPICAL REINFORCING.
☒ OPEN	INDICATES OPENING IN WALL – SEE TYPICAL REINFORCING NOTES U.N.O.
(215)	INDICATES DETAIL CUT FOR OTHER THAN ABOVE.

LINK BEAM (LB) SCHEDULE

907–01

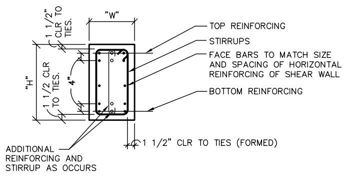
"W"
"H"
1 1/2" CLR TO TIES.
1 1/2 CLR TO TIES.
4"
TOP REINFORCING
STIRRUPS
FACE BARS TO MATCH SIZE AND SPACING OF HORIZONTAL REINFORCING OF SHEAR WALL
BOTTOM REINFORCING
1 1/2" CLR TO TIES (FORMED)
ADDITIONAL REINFORCING AND STIRRUP AS OCCURS

NOTE:
1. f'c OF LINK BEAM TO MATCH THE CONCRETE SHEAR WALL OF THE SAME FLOOR, TYP – U.N.O.
2. ALL STEEL REINFORCING fy = 75 KSI, TYP – U.N.O.
3. EXTEND HORIZONTAL REINFORCING 40" BEYOND EACH SIDE OF OPENING, TYP – U.N.O.

MARK	DIMENSIONS		REINFORCING			REMARKS
	"W"	"H"	TOP	BOTTOM	STIRRUPS	
LB1	12"	24"	4 #5 (2–LAYERS)	4 #5 (2–LAYERS)	#5 AT 6" O.C.	---
LB2	16"	36	4 #6 (2–LAYERS)	4 #6 (2–LAYERS)	#5 AT 4" O.C.	---
LB3	16"	48"	4 #6 (2–LAYERS)	4 #6 (2–LAYERS)	#5 AT 4" O.C.	---
LB4	16"	48"	4 #6 (2–LAYERS)	4 #6 (2–LAYERS)	#5 AT 4" O.C.	---
LB5	16"	24"	4 #6 (2–LAYERS)	4 #6 (2–LAYERS)	#5 AT 4" O.C.	---

SHEAR WALL KEY PLAN

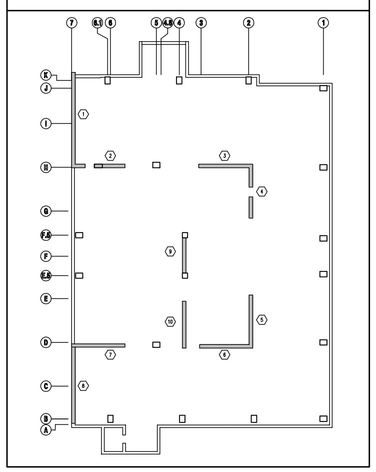
7
6.1
6
5
4.8
4
3
2
1
1
2
3
4
5
6
7
10

AWBREY
COOK
MCGILL
architects
1045 14th Street, Suite 100
San Diego, CA 92101-5701
Phone: 619 . 398 . 3480

ARCHITECTS:

THOMAS B. AWBREY	C 17578
CLIFFORD W. COOK	C 19705
SCOT W. McGILL	C 21059

Registered Professional Engineer (Structural)
CERTIFICATE NO.
42194
BRADY K.
NOTBOHM
Date Signed 8/22/14
ARIZONA, U.S.A.
EXPIRES 03-31-17

Copyright © 2014
AWBREY COOK MCGILL ARCHITECTS
All ideas, designs, and arrangements indicated on these drawings are the property of AWBREY COOK MCGILL ARCHITECTS and are intended to be used in connection with this specific project only and shall not otherwise be used for any purpose whatsoever without the written consent of the architects. There shall be no changes or deviations from these drawings or the accompanying specifications without the written consent of the architects.

CONSULTANTS:

CARUSO
TURLEY
SCOTT
INC.
consulting
structural
engineers
1215 W. Rio Salado Pkwy
Suite 200
Tempe, Arizona 85281
(480) 774-1700
(480) 774-1701 FAX
www.ctsaz.com

ENGINEER: TRM/BKN – JOB NUMBER: 13–112

REVISIONS:

3	MEP MAKEUP AIR & GUESTROOM FLR HGTS	8/22/14

THESE DRAWINGS/CALCULATIONS ARE CONSIDERED PRELIMINARY –NOT FOR CONSTRUCTION OR RECORDING UNLESS THE STRUCTURAL ENGINEER OF RECORD'S SEAL IS AFFIXED WITH WRITTEN SIGNATURE.

PROJECT:

Courtyard Marriott
Residence Inn Marriott

MARRIOTT RESIDENCE INN
- COURTYARD @ LUHRS
A Development of - LUHRS CM, LLC
Phoenix, Arizona

DRAWN:	SMV
CHECKED:	BKN/TRM
DATE:	12/16/13
PROJECT NO.:	12–1601

SHEET TITLE:
SHEAR WALL
ELEVATIONS

SHEET NO.:
S1.12

AWBREY . COOK . McGILL . ARCHITECTS 1045 14th Street Suite 100, San Diego, California 92101.5701 Telephone 619.398.3480 Fax. 619.398.3488

FINAL FOR CONSTRUCTION - 05/18/15

C:\Users\dft18\Documents\JOBS\13112\13-112ele.dwg, 8/20/2014 3:04:12 PM

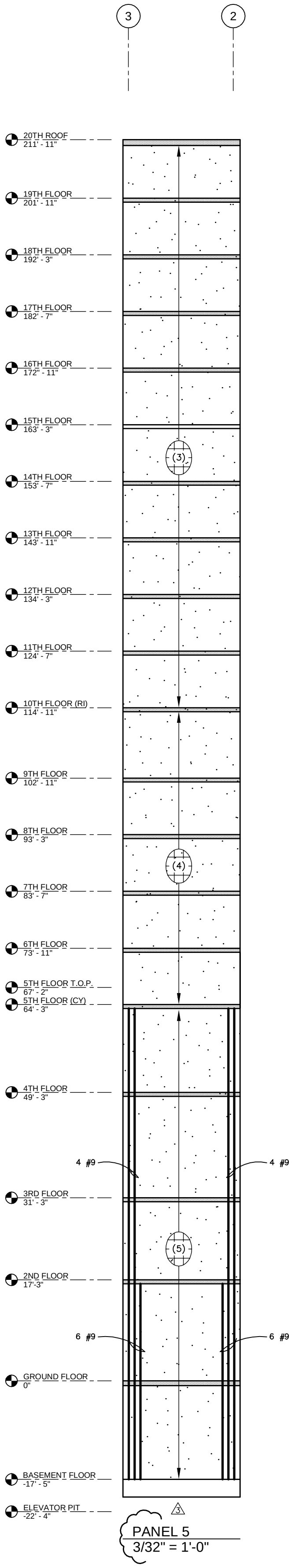
3
2
20TH ROOF 211' - 11"
19TH FLOOR 201' - 11"
18TH FLOOR 192' - 3"
17TH FLOOR 182' - 7"
16TH FLOOR 172" - 11"
15TH FLOOR 163' - 3"
14TH FLOOR 153' - 7"
13TH FLOOR 143' - 11"
12TH FLOOR 134' - 3"
11TH FLOOR 124' - 7"
10TH FLOOR (RI) 114' - 11"
9TH FLOOR 102' - 11"
8TH FLOOR 93' - 3"
7TH FLOOR 83' - 7"
6TH FLOOR 73' - 11"
5TH FLOOR T.O.P. 67' - 2"
5TH FLOOR (CY) 64' - 3"
4TH FLOOR 49' - 3"
3RD FLOOR 31' - 3"
2ND FLOOR 17'-3"
GROUND FLOOR 0"
BASEMENT FLOOR -17' - 5"
ELEVATOR PIT -22' - 4"
(3)
(4)
(5)
4 #9
4 #9
6 #9
6 #9
3

PANEL 5
3/32" = 1'-0"

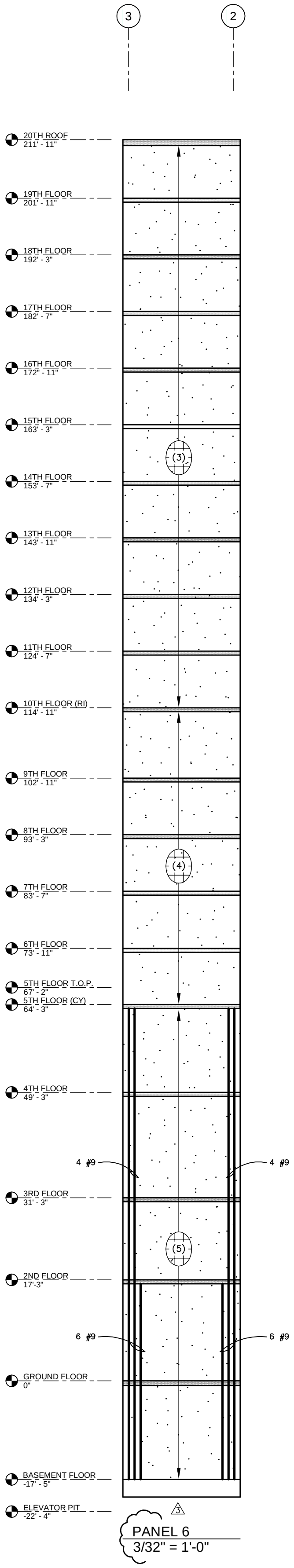
3
2
20TH ROOF 211' - 11"
19TH FLOOR 201' - 11"
18TH FLOOR 192' - 3"
17TH FLOOR 182' - 7"
16TH FLOOR 172" - 11"
15TH FLOOR 163' - 3"
14TH FLOOR 153' - 7"
13TH FLOOR 143' - 11"
12TH FLOOR 134' - 3"
11TH FLOOR 124' - 7"
10TH FLOOR (RI) 114' - 11"
9TH FLOOR 102' - 11"
8TH FLOOR 93' - 3"
7TH FLOOR 83' - 7"
6TH FLOOR 73' - 11"
5TH FLOOR T.O.P. 67' - 2"
5TH FLOOR (CY) 64' - 3"
4TH FLOOR 49' - 3"
3RD FLOOR 31' - 3"
2ND FLOOR 17'-3"
GROUND FLOOR 0"
BASEMENT FLOOR -17' - 5"
ELEVATOR PIT -22' - 4"
(3)
(4)
(5)
4 #9
4 #9
6 #9
6 #9
3

PANEL 6
3/32" = 1'-0"

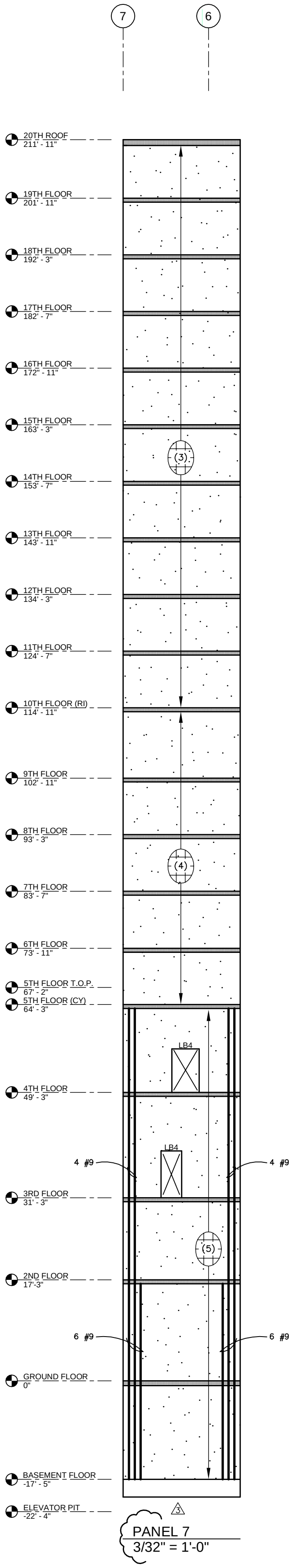
7
6
20TH ROOF 211' - 11"
19TH FLOOR 201' - 11"
18TH FLOOR 192' - 3"
17TH FLOOR 182' - 7"
16TH FLOOR 172" - 11"
15TH FLOOR 163' - 3"
14TH FLOOR 153' - 7"
13TH FLOOR 143' - 11"
12TH FLOOR 134' - 3"
11TH FLOOR 124' - 7"
10TH FLOOR (RI) 114' - 11"
9TH FLOOR 102' - 11"
8TH FLOOR 93' - 3"
7TH FLOOR 83' - 7"
6TH FLOOR 73' - 11"
5TH FLOOR T.O.P. 67' - 2"
5TH FLOOR (CY) 64' - 3"
4TH FLOOR 49' - 3"
3RD FLOOR 31' - 3"
2ND FLOOR 17'-3"
GROUND FLOOR 0"
BASEMENT FLOOR -17' - 5"
ELEVATOR PIT -22' - 4"
(3)
(4)
LB4
LB4
(5)
4 #9
4 #9
6 #9
6 #9
3

PANEL 7
3/32" = 1'-0"

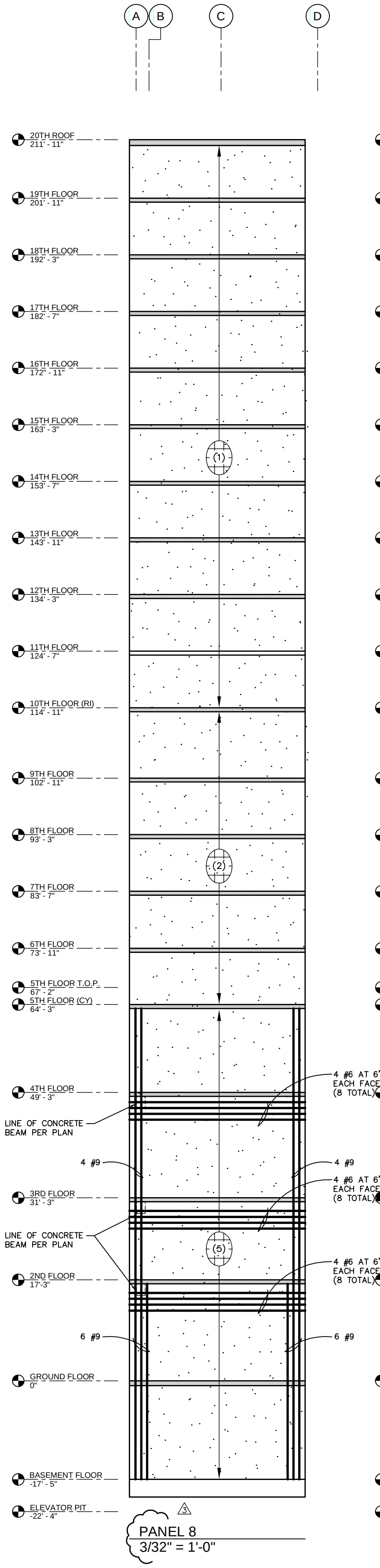
A
B
C
D
20TH ROOF 211' - 11"
19TH FLOOR 201' - 11"
18TH FLOOR 192' - 3"
17TH FLOOR 182' - 7"
16TH FLOOR 172" - 11"
15TH FLOOR 163' - 3"
14TH FLOOR 153' - 7"
13TH FLOOR 143' - 11"
12TH FLOOR 134' - 3"
11TH FLOOR 124' - 7"
10TH FLOOR (RI) 114' - 11"
9TH FLOOR 102' - 11"
8TH FLOOR 93' - 3"
7TH FLOOR 83' - 7"
6TH FLOOR 73' - 11"
5TH FLOOR T.O.P. 67' - 2"
5TH FLOOR (CY) 64' - 3"
4TH FLOOR 49' - 3"
3RD FLOOR 31' - 3"
2ND FLOOR 17'-3"
GROUND FLOOR 0"
BASEMENT FLOOR -17' - 5"
ELEVATOR PIT -22' - 4"
(1)
(2)
(5)
4 #6 AT 6" O.C. EACH FACE (8 TOTAL)
LINE OF CONCRETE BEAM PER PLAN
4 #9
4 #9
4 #6 AT 6" O.C. EACH FACE (8 TOTAL)
LINE OF CONCRETE BEAM PER PLAN
4 #6 AT 6" O.C. EACH FACE (8 TOTAL)
6 #9
6 #9
3

PANEL 8
3/32" = 1'-0"

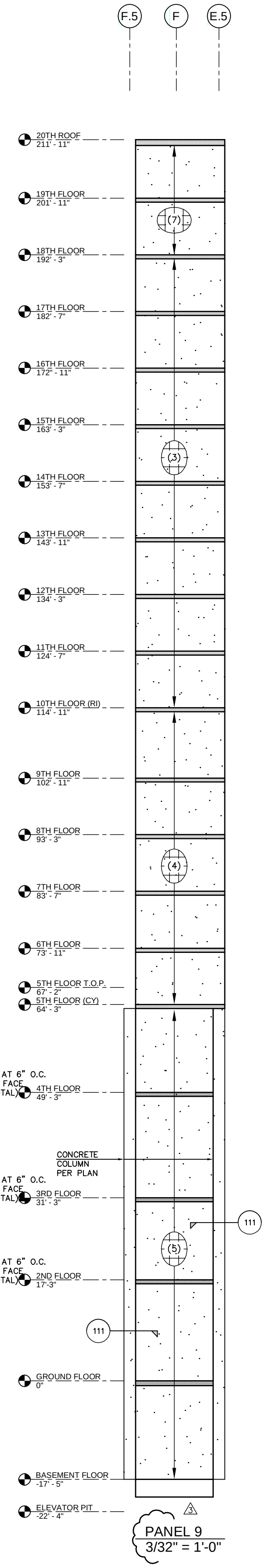
F.5
F
E.5
20TH ROOF 211' - 11"
19TH FLOOR 201' - 11"
18TH FLOOR 192' - 3"
17TH FLOOR 182' - 7"
16TH FLOOR 172" - 11"
15TH FLOOR 163' - 3"
14TH FLOOR 153' - 7"
13TH FLOOR 143' - 11"
12TH FLOOR 134' - 3"
11TH FLOOR 124' - 7"
10TH FLOOR (RI) 114' - 11"
9TH FLOOR 102' - 11"
8TH FLOOR 93' - 3"
7TH FLOOR 83' - 7"
6TH FLOOR 73' - 11"
5TH FLOOR T.O.P. 67' - 2"
5TH FLOOR (CY) 64' - 3"
4TH FLOOR 49' - 3"
3RD FLOOR 31' - 3"
2ND FLOOR 17'-3"
GROUND FLOOR 0"
BASEMENT FLOOR -17' - 5"
ELEVATOR PIT -22' - 4"
(7)
(3)
(4)
CONCRETE COLUMN PER PLAN
111
(5)
111
3

PANEL 9
3/32" = 1'-0"

CONCRETE SHEAR WALL SCHEDULE

13–112

MARK	WALL THICKNESS	CONCRETE STRENGTH	REINFORCING	REMARKS
(1)	8"	6 KSI	#5 VERT AT 16" O.C. CENTERED #5 HORIZ AT 16" O.C. CENTERED	---
(2)	8"	6 KSI	#5 VERT AT 12" O.C. CENTERED #5 HORIZ AT 16" O.C. CENTERED	---
(3)	12"	6 KSI	#5 VERT AT 16" O.C. EACH FACE #5 HORIZ AT 16" O.C. EACH FACE	---
(4)	12"	6 KSI	#5 VERT AT 12" O.C. EACH FACE #5 HORIZ AT 16" O.C. EACH FACE	---
(5)	16"	7 KSI	#6 VERT AT 12" O.C. EACH FACE #6 HORIZ AT 12" O.C. EACH FACE	---
(6)	16"	7 KSI	#9 VERT AT 12" O.C. EACH FACE #6 HORIZ AT 12" O.C. EACH FACE	---
(7)	12"	6 KSI	#5 VERT AT 8" O.C. EACH FACE #5 HORIZ AT 16" O.C. EACH FACE	---

CONCRETE SHEAR WALL NOTES:

1. WALL ELEVATIONS ARE FOR SHOWING REQUIRED REINFORCING ONLY. CONTRACTOR SHALL BE RESPONSIBLE FOR LAYING OUT WALLS TO PROPER DIMENSIONS WITH REQUIRED REINFORCING AND OPENINGS REQUIRED FOR EACH WALL.

2. ALL WALL ELEVATIONS ARE AS VIEWED FROM THE EXTERIOR SIDE OF THE BUILDING EXCEPT WHERE NOTED OTHERWISE. SEE ARCHITECTURAL ELEVATIONS FOR LOCATION AND TYPE OF FINISHES OR COVER.

3. DO NOT SCALE ANY WALL ELEVATIONS SHOWN HEREIN. REFER TO PLANS AND WALL ELEVATIONS FOR ALL DIMENSIONS. WHERE DIMENSIONS ARE SHOWN, IT IS INTENDED ONLY AS AN AID TO THE CONTRACTOR IN PROVIDING SHOP DRAWINGS. CONRACTOR SHALL BE RESPONSIBLE FOR VERIFICATION OF ALL DIMENSIONS WITH ARCHITECTURAL DRAWINGS PRIOR TO START OF CONSTRUCTION. RESOLVE ANY DISCREPANCY WITH THE ARCHITECT

4. DIMENSIONS FROM BUILDING FINISHED FLOORS TO BOTTOM OF WALL TO BE GOVERNED BY THE APPROPRIATELY FLAGGED FOUNDATION DETAIL FOR EACH PARTICULAR LOCATION, USED IN CONJUNCTION WITH FINISHED GRADES ADJACENT TO BUILDINGS SHOWN ON CIVIL ENGINEERING DRAWINGS. VERIFY WITH FLAGGED DETAILS ON ARCHITECTURAL DRAWINGS.

5. ALL WALL OPENINGS MAY NOT NECESSARILY BE SHOWN ON THE ELEVATIONS. FOR EXACT SIZE, NUMBER AND LOCATION OF OPENINGS, SEE ARCHITECTURAL, MECHANICAL, PLUMBING AND ELECTRICAL DRAWINGS. RESOLVE ANY DISCREPANCY THRU THE ARCHITECT.

6. SEE PLANS, ELEVATIONS, SECTIONS, NOTES AND/OR DETAILS FOR ALL HEIGHTS, OPENINGS, EMBEDDED ITEMS, ETC.

7. PROVIDE 3/4" X 3/4" CHAMFERS AT ALL EXPOSED WALL EDGES AND CORNERS, UNLESS NOTED OTHERWISE.

8. ALL "TYPICAL REINFORCING" OCCURS THROUGHOUT THE WALL EXCEPT WHERE "SPECIAL REINFORCING" IS SHOWN IN LIEU OF TYPICAL REINFORCING. SEE WALL ELEVATIONS AND NOTES.

9. VERTICAL REINFORCING TO BE CENTERED IN DESIGN WALL THICKNESS U.N.O. THE EDGE CLEARANCE OF ALL PERIMETER REINFORCING AT WALLS AND OPENINGS SHALL BE AS SHOWN IN DETAILS. ALL DOUBLE REINFORCING SHALL BE AS SHOWN IN DETAILS.

10. REINFORCING STEEL SHALL BE ASTM–A615 GRADE 60 U.N.O.

11. ALL REINFORCING SHOWN WELDED IN DETAILS SHALL BE ASTM A706 GRADE 60 USING E90 SERIES LOW HYDROGEN RODS FOR WELDING.

12. ALL HEADED STUDS SHALL BE PER GENERAL STRUCTURAL NOTES.

WALL ELEVATION LEGEND:

(1)	INDICATES TYPICAL WALL REINFORCING UNLESS SPECIFICALLY NOTED OTHERWISE.
⟷ (2)	INDICATES SPECIAL WALL REINFORCING IN LIEU OF TYPICAL REINFORCING.
☒ OPEN	INDICATES OPENING IN WALL – SEE TYPICAL REINFORCING NOTES U.N.O.
215	INDICATES DETAIL CUT FOR OTHER THAN ABOVE.

LINK BEAM (LB) SCHEDULE

907–01

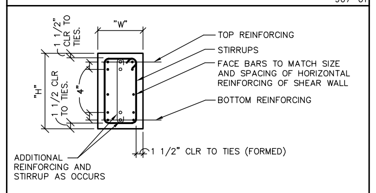
"W"
1 1/2" CLR TO TIES.
"H"
1 1/2 CLR TO TIES.
4"
TOP REINFORCING
STIRRUPS
FACE BARS TO MATCH SIZE AND SPACING OF HORIZONTAL REINFORCING OF SHEAR WALL
BOTTOM REINFORCING
1 1/2" CLR TO TIES (FORMED)
ADDITIONAL REINFORCING AND STIRRUP AS OCCURS

NOTE:
1. f'c OF LINK BEAM TO MATCH THE CONCRETE SHEAR WALL OF THE SAME FLOOR, TYP – U.N.O.
2. ALL STEEL REINFORCING fy = 75 KSI, TYP – U.N.O.
3. EXTEND HORIZONTAL REINFORCING 40" BEYOND EACH SIDE OF OPENING, TYP – U.N.O.

MARK	DIMENSIONS		REINFORCING			REMARKS
	"W"	"H"	TOP	BOTTOM	STIRRUPS	
LB1	12"	24"	4 #5 (2–LAYERS)	4 #5 (2–LAYERS)	#5 AT 6" O.C.	---
LB2	16"	36	4 #6 (2–LAYERS)	4 #6 (2–LAYERS)	#5 AT 4" O.C.	---
LB3	16"	48"	4 #6 (2–LAYERS)	4 #6 (2–LAYERS)	#5 AT 4" O.C.	---
LB4	16"	48"	4 #6 (2–LAYERS)	4 #6 (2–LAYERS)	#5 AT 4" O.C.	---
LB5	16"	24"	4 #6 (2–LAYERS)	4 #6 (2–LAYERS)	#5 AT 4" O.C.	---

SHEAR WALL KEY PLAN

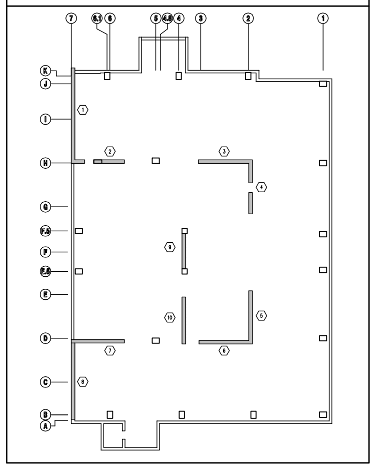
7
6.1
6
5
4.6
4
3
2
1

AWBREY
COOK
MCGILL
architects
1045 14th Street, Suite 100
San Diego, CA 92101-5701
Phone: 619 . 398 . 3480

ARCHITECTS:

THOMAS B. AWBREY	C 17578
CLIFFORD W. COOK	C 19705
SCOT W. McGILL	C 21059

Registered Professional Engineer (Structural)
CERTIFICATE NO.
42194
BRADY K.
NOTBOHM
8/22/14
Date Signed
ARIZONA, U.S.A.
EXPIRES 03-31-17

Copyright © 2014
AWBREY COOK MCGILL ARCHITECTS
All ideas, designs, and arrangements indicated on these drawings are the property of AWBREY COOK MCGILL ARCHITECTS and are intended to be used in connection with this specific project only and shall not otherwise be used for any purpose whatsoever without the written consent of the architects. There shall be no changes or deviations from these drawings or the accompanying specifications without the written consent of the architects.

CONSULTANTS:

CARUSO
TURLEY
SCOTT
INC.
consulting
structural
engineers
1215 W. Rio Salado Pkwy
Suite 200
Tempe, Arizona 85281
(480) 774-1700
(480) 774-1701 FAX
www.ctsaz.com

ENGINEER: TRM/BKN – JOB NUMBER: 13–112

REVISIONS:

3	MEP MAKEUP AIR & GUESTROOM FLR HGTS	8/22/14

THESE DRAWINGS/CALCULATIONS ARE CONSIDERED PRELIMINARY –NOT FOR CONSTRUCTION OR RECORDING UNLESS THE STRUCTURAL ENGINEER OF RECORD'S SEAL IS AFFIXED WITH WRITTEN SIGNATURE.

PROJECT:

MARRIOTT RESIDENCE INN
- COURTYARD @ LUHRS
A Development of - LUHRS CM, LLC
Phoenix, Arizona

DRAWN:	SMV
CHECKED:	BKN/TRM
DATE:	12/16/13
PROJECT NO.:	12–1601

SHEET TITLE:
SHEAR WALL
ELEVATIONS

SHEET NO.:
S1.13

AWBREY . COOK . McGILL . ARCHITECTS 1045 14th Street Suite 100, San Diego, California 92101.5701 Telephone 619.398.3480 Fax. 619.398.3488

FINAL FOR CONSTRUCTION - 05/18/15

C:\Users\dft18\Documents\JOBS\13112\13-112ele.dwg, 8/20/2014 3:04:45 PM

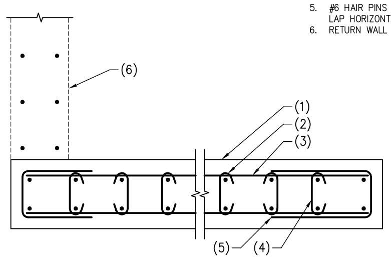

NOTES:

1. CONCRETE SHEAR WALL.
2. VERTICAL REINFORCING PER SHEAR WALL ELEVATIONS.
3. HORIZONTAL REINFORCING PER SHEAR WALL ELEVATIONS.
4. #4 TIES VERTICALLY SPACE AT 16" O.C.
5. #6 HAIR PINS TO MATCH AND LAP HORIZONTAL REINFORCING.
6. RETURN WALL AT DETAIL 114A.

114 PLAN VIEW – SPECIAL REINFORCING AT CONCRETE SHEARWALL
114A AS NOTED
13–112 NO SCALE

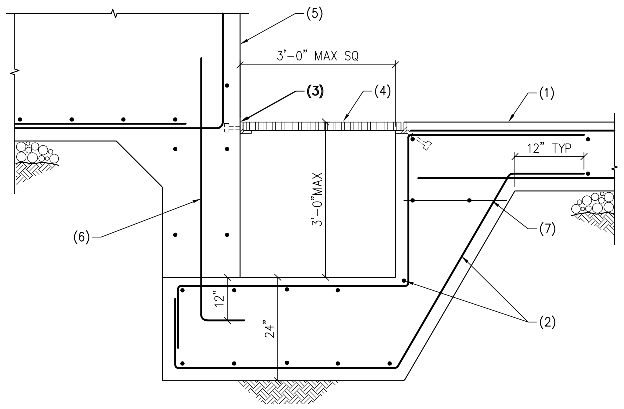

NOTES:

1. CONCRETE ELEVATOR PIT SLAB ON GRADE.
2. REINFORCING TO MATCH AND LAP FOOTING REINFORCING EACH WAY, TOP AND BOTTOM PER TYPICAL LAP DETAIL.
3. 2x2x1/4" STEEL ANGLE WITH 1/2" DIA. HEADED STUDS AT 16" O.C. – MIN. 2 PER SIDE.
4. STEEL GRATE PER G.S.N.
5. CONCRETE MAT FOUNDATION.
6. DOWELS PER DETAIL 107.
7. #5 AT 12" O.C.

108 SUMP AT ELEVATOR PIT
13–112 NO SCALE

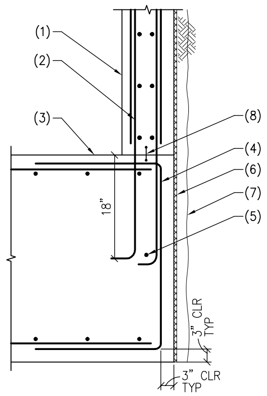

NOTES:

1. 12" CONCRETE WALL WITH #5 VERTICALS AT 6" O.C. AND #5 HORIZONTALS AT 18" O.C. – TYP EACH FACE OF WALL.
2. DOWELS TO MATCH AND LAP VERTICAL WALL REINFORCING PER G.S.N. WITH "STANDARD HOOK".
3. CONCRETE MAT FOUNDATION.
4. #6 BENT 'U' BARS TO MATCH AND LAP FOUNDATION REINFORCING.
5. #6 CONTINUOUS AT 12" O.C..
6. WATERPROOFING PER ARCH'L.
7. TEMPORARY SHORING SUPPORT WALL.
8. WATERSTOP PER ARCH'L.

104 CONCRETE WALL AT MAT FOUNDATION
13–112 NO SCALE

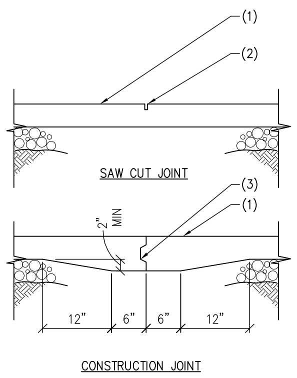

NOTES:

1. CONCRETE SLAB ON GRADE.
2. SAWCUT – 1/8" WIDE X 1/4 SLAB THICKNESS IN DEPTH – CUT SHALL BE MADE SOON ENOUGH TO PREVENT SHRINKAGE CRACKING, BUT NOT SO SOON AS TO CAUSE SPALLING OF THE CONCRETE WHILE SAWING. WORK MUST BE ACCOMPLISHED WITHIN 4 TO 12 HOURS OF CONCRETE FINISH.
3. CONTINUOUS KEY – SEE TYPICAL KEY IN CONCRETE SLAB ON GRADE.

NOTE:
KEYED JOINTS NEED ONLY OCCUR AT EXPOSED EDGES DURING PLACEMENT UNLESS SPECIFICALLY NOTED ON THE PLANS.

101 (L) CONTROL JOINTS IN CONCRETE SLAB ON GRADE (5" MAX SLAB)
101–01 NO SCALE

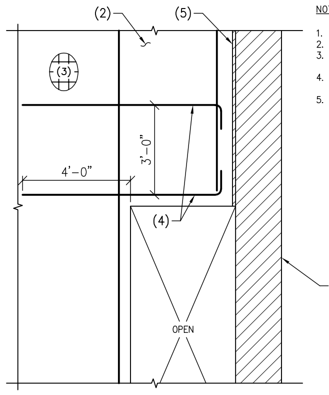

NOTES:

1. MASONRY WALL PER PLAN.
2. CONCRETE WALL PER PLAN.
3. WALL REINFORCING PER SCHEDULE.
4. HORIZONTAL REINFORCING WITH STANDARD HOOK.
5. JOINT FILLER PER ARCH'L.

115 OPENING IN CONCRETE WALL
13–112 NO SCALE

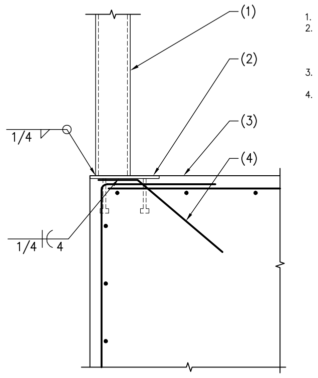

NOTES:

1. STEEL COLUMN.
2. 1/2"x12"x12" STEEL PLATE WITH 4–3/4" DIA x 0'–6" LONG HEADED STUDS AT 9" O.C. EACH WAY.
3. MAT FOUNDATION AND REINFORCING PER PLAN.
4. 2 #4x6"x12" BENT BARS AT 6" O.C.

112 STEEL COLUMN AT MAT FOUNDATION
13–112 NO SCALE

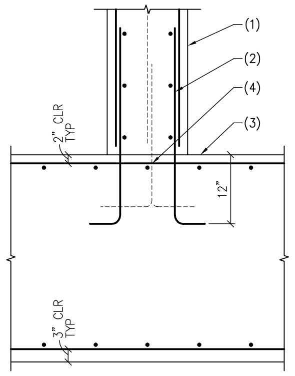

NOTES:

1. CONCRETE WALL.
2. DOWELS TO MATCH AND LAP VERTICAL COLUMN REINFORCING PER G.S.N. WITH "STANDARD HOOK".
3. CONCRETE MAT FOUNDATION.
4. DOWEL AT SINGLE MAT – ALTERNATE BENDS.

109 CONCRETE WALL AT MAT FOUNDATION
13–112 NO SCALE

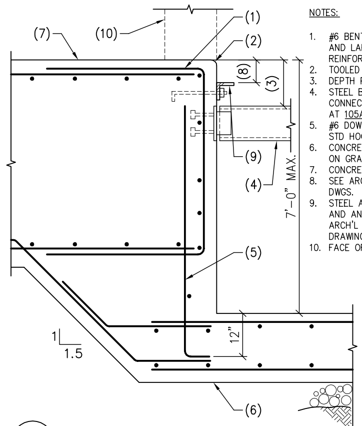

NOTES:

1. #6 BENT 'U' BARS TO MATCH AND LAP FOUNDATION REINFORCING.
2. TOOLED EDGE.
3. DEPTH PER ELEVATOR MFG.
4. STEEL BEAM WITH CONNECTION PER DETAIL 106 AT 105A.
5. #6 DOWELS AT 12" O.C. WITH STD HOOK.
6. CONCRETE ELEVATOR SLAB ON GRADE.
7. CONCRETE MAT FOUNDATION.
8. SEE ARCH'L AND ELEVATOR DWGS.
9. STEEL ANGLE – FOR SIZE AND ANCHOR BOLTS, SEE ARCH'L OR ELEVATOR MFR DRAWINGS.
10. FACE OF WALL BEYOND.

105 CONCRETE MAT FOUNDATION AT ELEVATOR PIT
105A AS NOTED
13–112 NO SCALE

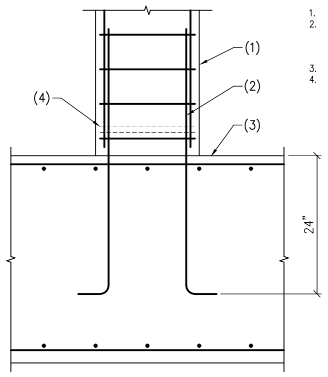

NOTES:

1. CONCRETE COLUMN.
2. DOWELS TO MATCH AND LAP VERTICAL COLUMN REINFORCING PER G.S.N. WITH "STANDARD HOOK".
3. CONCRETE MAT FOUNDATION.
4. ADDITIONAL TIES WHERE REQUIRED BY TYPICAL DETAIL.

102 CONCRETE COLUMN AT MAT FOUNDATION
13–112 NO SCALE

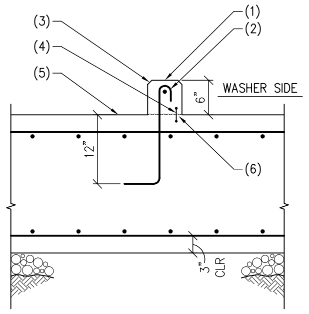

NOTES:

1. 6" CONCRETE CURB WITH 1 #4 CONTINUOUS.
2. #4 HOOKED DOWELS AT 18" O.C.
3. TOOLED EDGE.
4. WATERSTOP PER ARCH'L.
5. CONCRETE MAT FOUNDATION.
6. ROUGHEN SURFACE WITH 1/4" AMPLITUDE.

116 CONCRETE CURB AT MAT FOUNDATION
13–112 NO SCALE

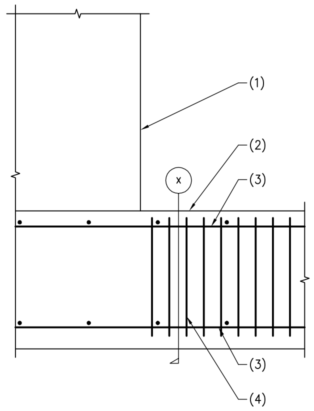

NOTES:

1. CONCRETE WALL OR COLUMN.
2. CONCRETE MAT FOUNDATION.
3. TOP AND BOTTOM REINFORCING. PER PLAN.
4. SHEAR REINFORCING PER PLAN.
5. INSTALL ADDITIONAL BARS AS REQUIRED.

NOTE:
WALL REINFORCING NOT SHOWN FOR CLARITY.

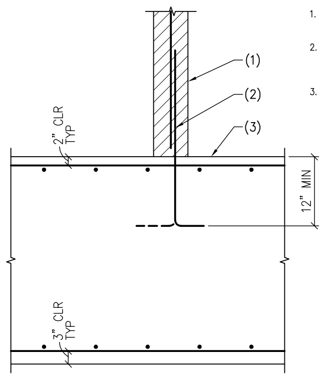

NOTES:

1. 8" MASONRY WALL WITH #5 AT 48" O.C. – GROUT SOLID FULL HEIGHT.
2. DOWELS TO MATCH AND LAP VERTICAL COLUMN REINFORCING PER G.S.N. WITH "STANDARD HOOK" – ALTERNATE BENDS.
3. CONCRETE MAT FOUNDATION.

110 MASONRY WALL AT MAT FOUNDATION
13–112 NO SCALE

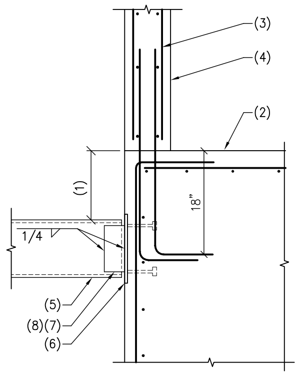

NOTES:

1. DEPTH PER ELEVATOR MFR.
2. CONCRETE MAT FOUNDATION.
3. VERTICAL WALL REINFORCING – PER PLAN.
4. CONCRETE SHEAR WALL.
5. STEEL BEAM.
6. 12x12x1/2" STEEL EMBED PLATE WITH 4–3/4" DIA. HEADED STUDS AT 9" O.C.
7. 2"x2"x1/4" X 6" LONG STEEL ANGLE TYP EACH SIDE OF BEAM.
8. OMIT ANGLE AT OPPOSITE END AND WELD BEAM DIRECTLY TO PLATE.

106 ELEVATOR SPREADER BEAM
13–112 NO SCALE

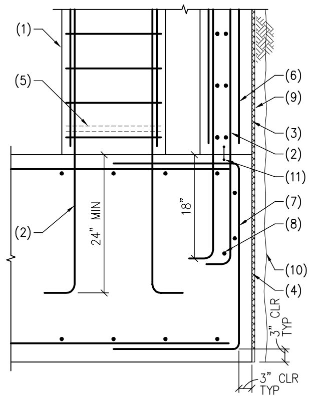

NOTES:

1. CONCRETE COLUMN.
2. DOWELS TO MATCH AND LAP VERTICAL COLUMN REINFORCING PER G.S.N. WITH "STANDARD HOOK".
3. CONCRETE WALL.
4. CONCRETE MAT FOUNDATION.
5. ADDITIONAL TIES WHERE REQUIRED BY TYPICAL DETAIL.
6. VERTICAL WALL REINFORCING PER DETAIL 104.
7. #6 BENT 'U' BARS TO MATCH AND LAP FOUNDATION REINFORCING.
8. #6 CONTINUOUS AT 12" O.C.
9. WATERPROOFING PER ARCH'L.
10. TEMPORARY SHORING SUPPORT WALL.
11. WATERSTOP PER ARCH'L.

103 CONCRETE COLUMN AT MAT FOUNDATION
13–112 NO SCALE

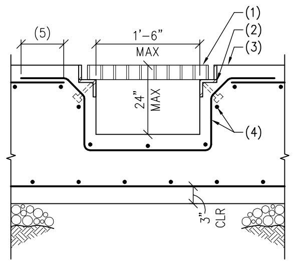

NOTES:

1. STAINLESS STEEL GRATING PER ARCHITECTURAL DRAWINGS.
2. 2"x2"x1/4" GALVANIZED STEEL ANGLE WITH 1/4"x1 1/2" STEEL BAR AND 1/2" DIA.x4" LONG HEADED ANCHORS AT 24" O.C. CENTER.
3. CONCRETE MAT FOUNDATION.
4. #6 REINFORCING AT 12" O.C. TYPICAL WHERE SHOWN AROUND TRENCH.
5. LAP REINFORCING PER SCHEDULE.

NOTE:
VERIFY TRENCH SIZE AND LOCATION WITH EQUIPMENT DRAWINGS.

117 TRENCH DRAIN AT MAT FOUNDATION
13–112 NO SCALE

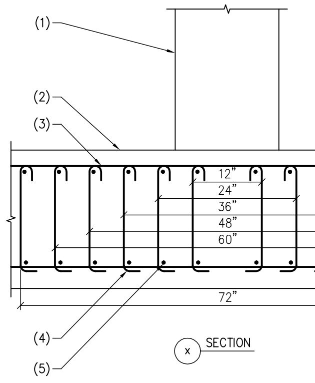

113 SHEAR REINFORCING AT MAT FOUNDATION
13–112 NO SCALE

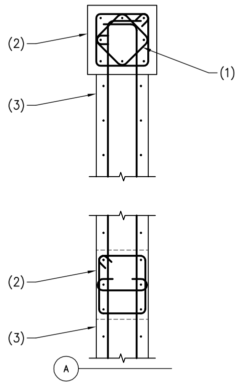

NOTES:

1. TERMINATE HORIZONTAL REINFORCING IN COLUMN WITH STANDARD HOOK.
2. CONCRETE COLUMN.
3. CONCRETE WALL.

111 PLAN – CONCRETE SHEAR WALL AT CONCRETE COLUMN
111A AS NOTED
13–112 NO SCALE

NOTES:

1. CONCRETE WALL.
2. CONCRETE MAT FOUNDATION.
3. VERTICAL DOWELS TO MATCH AND LAP WALL REINFORCING PER G.S.N.
4. #6 DOWELS AT 12" O.C. WITH STD HOOK.
5. 24" THICK CONCRETE ELEVATOR SLAB ON GRADE WITH #7 AT 12" O.C. EACH WAY TOP AND BOTTOM.

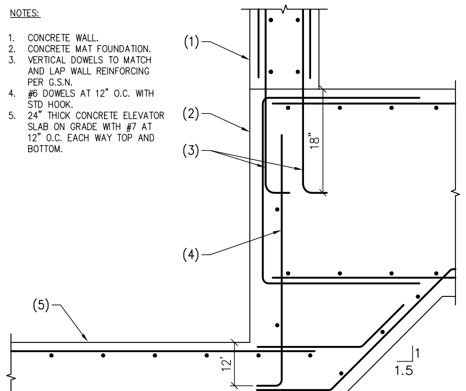

107 CONCRETE ELEVATOR SLAB AT CONCRETE MAT FOUNDATION
13–112 NO SCALE

AWBREY
COOK
MCGILL
architects
1045 14th Street, Suite 100
San Diego, CA 92101-5701
Phone: 619 . 398 . 3480

ARCHITECTS:

THOMAS B. AWBREY	C 17578
CLIFFORD W. COOK	C 19705
SCOT W. McGILL	C 21059

42194
BRADY K. NOTBOHM
8/22/14
EXPIRES 03-31-17

Copyright © 2014
AWBREY COOK MCGILL ARCHITECTS
All ideas, designs, and arrangements indicated on these drawings are the property of AWBREY COOK MCGILL ARCHITECTS and are intended to be used in connection with this specific project only and shall not otherwise be used for any purpose whatsoever without the written consent of the architects. There shall be no changes or deviations from these drawings or the accompanying specifications without the written consent of the architects.

CONSULTANTS:

CARUSO
TURLEY
SCOTT
INC.
consulting
structural
engineers
1215 W. Rio Salado Pkwy
Suite 200
Tempe, Arizona 85281
(480) 774–1700
(480) 774–1701 FAX
www.ctsaz.com

ENGINEER: TRM/BKN – JOB NUMBER: 13–112

REVISIONS:

THESE DRAWINGS/CALCULATIONS ARE CONSIDERED PRELIMINARY –NOT FOR CONSTRUCTION OR RECORDING UNLESS THE STRUCTURAL ENGINEER OF RECORD'S SEAL IS AFFIXED WITH WRITTEN SIGNATURE.

PROJECT:

MARRIOTT RESIDENCE INN
- COURTYARD @ LUHRS
A Development of - LUHRS CM, LLC
Phoenix, Arizona

DRAWN:	SMV
CHECKED:	BKN/TRM
DATE:	12/16/13
PROJECT NO.:	12–1601

SHEET TITLE:
FOUNDATION DETAILS

SHEET NO.:
S2.1

AWBREY . COOK . McGILL . ARCHITECTS 1045 14th Street Suite 100, San Diego, California 92101.5701 Telephone 619.398.3480 Fax. 619.398.3488

FINAL FOR CONSTRUCTION - 05/18/15

C:\Users\dft18\Documents\JOBS\13112\13-112S21.dwg, 8/20/2014 3:12:43 PM

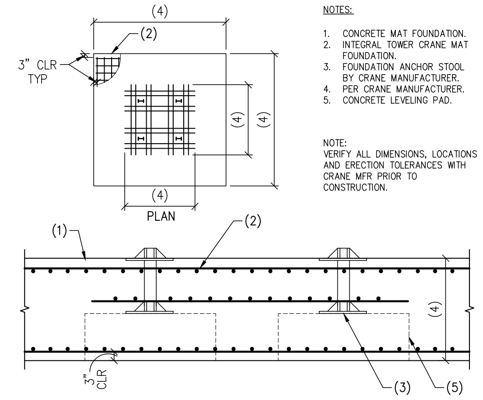

NOTES:

1. CONCRETE MAT FOUNDATION.
2. INTEGRAL TOWER CRANE MAT FOUNDATION.
3. FOUNDATION ANCHOR STOOL BY CRANE MANUFACTURER.
4. PER CRANE MANUFACTURER.
5. CONCRETE LEVELING PAD.

NOTE:
VERIFY ALL DIMENSIONS, LOCATIONS AND ERECTION TOLERANCES WITH CRANE MFR PRIOR TO CONSTRUCTION.

128 CONCRETE FOUNDATION FOR TOWER CRANE

13–112 NO SCALE

	CLASS B TENSION SPLICE LENGTHS										COMP. BARS	
CONC PSI	f'c=2,500/3,000 PSI		f'c = 4,000 PSI		f'c = 5,000 PSI		f'c = 6000 PSI		f'c = 7,000 PSI		f'c = ≧ 3,000	
BAR LOCATION / SIZE (METRIC)	REGULAR	TOP	REGULAR	TOP	REGULAR	TOP	REGULAR	TOP	REGULAR	TOP	STD LAP	ENCLOSED W/ SPIRAL TIES
#3 (10)	24"	31"	19"	24"	17"	22"	16"	20"	16"	18"	12"	12"
#4 (13)	32"	41"	25"	32"	22"	29"	20"	26"	19"	25"	15"	12"
#5 (16)	39"	51"	31"	40"	28"	36"	25"	33"	24"	31"	19"	14"
#6 (19)	47"	61"	37"	48"	33"	43"	31"	40"	28"	37"	23"	17"
#7 (22)	69"	89"	54"	70"	49"	63"	44"	58"	41"	53"	26"	20"
#8 (25)	78"	102"	62"	80"	55"	72"	51"	66"	47"	61"	30"	23"
#9 (29)	88"	115"	70"	91"	63"	81"	57"	74"	53"	69"	34"	25"
#10 (32)	99"	129"	79"	102"	70"	91"	64"	83"	59"	77"	38"	28"
#11 (36)	110"	143"	87"	113"	78"	101"	71"	93"	66"	86"	42"	31"

NOTES:
1. TOP BARS ARE ANY HORIZONTAL BARS PLACED SO THAT MORE THAN 12" OF FRESH CONCRETE IS CAST IN THE MEMBER BELOW THE REINFORCEMENT.
2. LAP SPLICES SHALL BE CLASS "B" TENSION LAP SPLICES PER LATEST EDITION OF ACI 318 UNLESS SPECIFICALLY NOTED OTHERWISE ON THE DRAWINGS OR SCHEDULES.
3. CONTACT STRUCTURAL ENGINEER IF CLEAR SPACING OF REINFORCEMENT IS LESS THAN OR ≦ EQUAL TO 2 BAR DIAMETERS (2db), OR IF CLEAR COVER IS LESS THAN THE BAR DIAMETER (db).
4. THIS TABLE IS BASED ON NORMAL WEIGHT CONCRETE.
5. FOR ADDITIONAL INFORMATION, SEE G.S.N., PLANS, SCHEDULES AND DETAILS.

129 LAP SCHEDULE FOR REINFORCING STEEL IN CONCRETE (GRADE 60)

ISSUED AS SSK1 4/20/15 201–31.06 NO SCALE

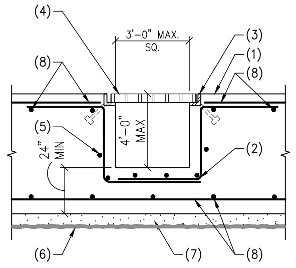

NOTES:

1. CONCRETE MAT SLAB ON GRADE.
2. #6 REINFORCING AT 8" O.C. LAP FOOTING REINFORCING EACH WAY PER TYPICAL LAP DETAIL.
3. 3"x3"X1/4" STEEL ANGLE WITH 1/2" DIA. HEADED STUDS AT 16" O.C. – MIN. 2 PER SIDE.
4. UNLESS NOTED OTHERWISE ON PLUMBING OR ARCHITECTURAL DRAWINGS USE STEEL GRATE PER G.S.N.
5. #6 AT 8" O.C. VERTICALLY.
6. WATERPROOFING PER ARCH'L.
7. WASTE SLAB AS OCCURS.
8. FOOTING REINFORCING PER PLAN.

NOTE:
REFER TO ARCH'L AND MEP DRAWINGS FOR ADDITIONAL INFORMATION.

130 SUMP AT THICK MAT SLAB

13–112 NO SCALE

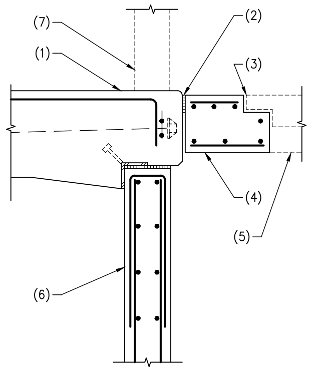

NOTES:

1. CONCRETE SLAB.
2. JOINT FILLER AND CAULKING TO PREVENT WATER INTRUSION.
3. WATERPROOF ACCESS HATCH ASSEMBLY BY VERSA STEEL OR EQUIVALENT.
4. CONCRETE SLAB PER DETAIL 123.
5. LINE OF SLAB BEYOND.
6. CONCRETE WALL.
7. LINE OF WALL ABOVE AS OCCURS.

NOTE:
SEE DETAIL 225 FOR ADDITIONAL INFORMATION.

124 ACCESS HATCH AT CONCRETE SLAB

13–112 NO SCALE

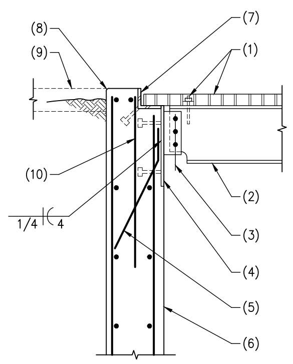

NOTES:

1. STEEL GRATING WITH CONNECTIONS AT 48" O.C. MAX.
2. GALVANIZED STEEL BEAM.
3. FOR SIZE, TYPE AND NUMBER OF BOLTS, SEE TYPICAL BOLT SCHEDULE.
4. 1/2"x14"x14" STEEL PLATE WITH 4–3/4" DIA x 6" LONG HEADED ANCHORS AT 10" O.C. EACH WAY.
5. 2 #4x8"x16" BENT AS SHOWN AT 6" O.C.
6. CONCRETE WALL.
7. CONTINUOUS 4"x4"x1/4" GALVANIZED STEEL ANGLE WITH 1/2" DIA x 4" LONG HEADED ANCHORS AT 16" O.C. CLIP ANGLE AS REQUIRED.
8. TOOLED EDGE.
9. FINISHED GRADE OR PAVING AS OCCURS.
10. #5x48" DOWEL TO MATCH AND LAP WALL REINFORCING.

125 STEEL BEAM AT CONCRETE WALL

13–112 NO SCALE

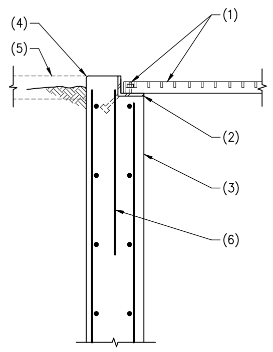

NOTES:

1. STEEL GRATING WITH CONNECTIONS AT 48" O.C. MAX.
2. CONTINUOUS 4"x4"x1/4" GALVANIZED STEEL ANGLE WITH 1/2" DIA x 4" LONG HEADED ANCHORS AT 16" O.C. CLIP ANGLE AS REQUIRED.
3. CONCRETE WALL.
4. TOOLED EDGE.
5. FINISHED GRADE OR PAVING AS OCCURS.
6. #5x48" DOWEL TO MATCH AND LAP WALL REINFORCING.

126 STEEL GRATING AT CONCRETE WALL

13–112 NO SCALE

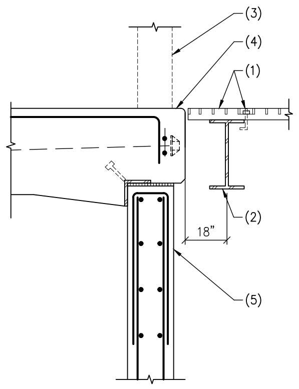

NOTES:

1. STEEL GRATING WITH CONNECTIONS AT 48" O.C.
2. GALVANIZED STEEL BEAM.
3. LINE OF WALL ABOVE AS OCCURS.
4. CONCRETE SLAB.
5. CONCRETE WALL.

NOTE:
SEE DETAIL 225 FOR ADDITIONAL INFORMATION.

127 STEEL GRATING AT CONCRETE SLAB

13–112 NO SCALE

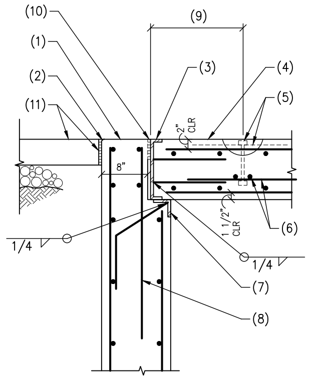

NOTES:

1. CONCRETE WALL.
2. TOOLED EDGE.
3. CONTINUOUS GALVANIZED C12x10.6 STEEL CHANNEL WITH 2 #4x32" A706 REBAR AT 10" O.C.
4. 12" THICK CONCRETE LIFT SLAB WITH #5 AT 10" O.C. EACH WAY TOP AND BOTTOM (F'c=5000 PSI).
5. 3/4" DIA x 9 1/2" LONG P52 SWIFT LIFT ANCHOR (4 TON CAPACITY) WITH P59 SHEAR BAR AND P54 RECESS PLUG ASSEMBLY.
6. #4x36" LONG BAR EACH SIDE OF ANCHOR (4 TOTAL).
7. CONTINUOUS 4"x4"x1/4" GALVANIZED STEEL ANGLE WITH #4x36" BENT BAR AT 16" O.C.
8. #5x48" DOWELS TO MATCH AND LAP VERTICAL REINFORCING.
9. LOCATE LIFT ANCHOR ASSEMBLY 24" IN FROM EACH CORNER (4 TOTAL).
10. JOINT FILLER AND CAULKING TO PREVENT WATER INTRUSION.
11. CONCRETE SIDEWALK WITH 1/2" EXPANSION JOINT MATERIAL AS OCCURS.

121 CONCRETE LIFT SLAB AT APS VAULT

13–112 NO SCALE

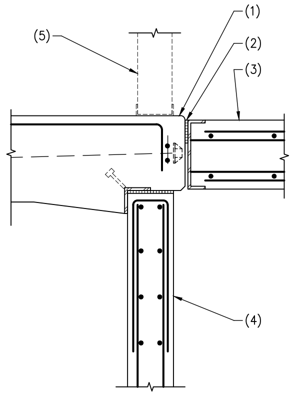

NOTES:

1. CONCRETE SLAB.
2. JOINT FILLER AND CAULKING TO PREVENT WATER INTRUSION.
3. CONCRETE LIFT SLAB PER DETAIL 121.
4. CONCRETE WALL.
5. LINE OF WALL ABOVE AS OCCURS.

NOTE:
SEE DETAIL 225 FOR ADDITIONAL INFORMATION.

122 CONCRETE LIFT SLAB AT CONCRETE SLAB

13–112 NO SCALE

NOTES:

1. CONCRETE WALL.
2. TOOLED EDGE.
3. JOINT FILLER AND CAULKING TO PREVENT WATER INTRUSION.
4. WATERPROOF ACCESS HATCH ASSEMBLY BY VERSA STEEL OR EQUIVALENT.
5. CONCRETE LIFT SLAB PER DETAIL 121.
6. CONCRETE SIDEWALK WITH 1/2" EXPANSION JOINT MATERIAL AS OCCURS.
7. 12" THICK CONCRETE SLAB WITH #5 AT 10" O.C. EACH WAY TOP AND BOTTOM. (f'c=5000 psi).
8. #5 HOOKED DOWEL TO MATCH AND LAP REINFORCING.
9. LINE OF SLAB BEYOND.

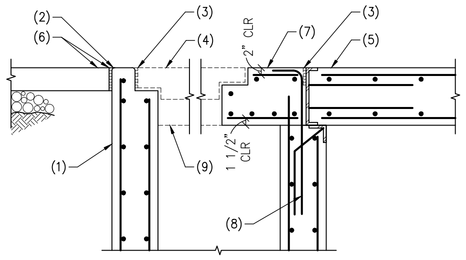

123 ACCESS HATCH AT APS VAULT

13–112 NO SCALE

THESE DRAWINGS/CALCULATIONS ARE CONSIDERED PRELIMINARY –NOT FOR CONSTRUCTION OR RECORDING UNLESS THE STRUCTURAL ENGINEER OF RECORD'S SEAL IS AFFIXED WITH WRITTEN SIGNATURE.

AWBREY
COOK
MCGILL
architects
1045 14th Street, Suite 100
San Diego, CA 92101-5701
Phone: 619 . 398 . 3480

ARCHITECTS:
THOMAS B. AWBREY C 17578
CLIFFORD W. COOK C 19705
SCOT W. McGILL C 21059

42194
BRADY K.
NOTBOHM
8/22/14
EXPIRES 03-31-17

Copyright © 2014
AWBREY COOK MCGILL ARCHITECTS
All ideas, designs, and arrangements indicated on these drawings are the property of AWBREY COOK MCGILL ARCHITECTS and are intended to be used in connection with this specific project only and shall not otherwise be used for any purpose whatsoever without the written consent of the architects. There shall be no changes or deviations from these drawings or the accompanying specifications without the written consent of the architects.

CONSULTANTS:
CARUSO
TURLEY
SCOTT
INC.
consulting
structural
engineers
1215 W. Rio Salado Pkwy
Suite 200
Tempe, Arizona 85281
(480) 774–1700
(480) 774–1701 FAX
www.ctsaz.com

ENGINEER: TRM/BKN – JOB NUMBER: 13–112

REVISIONS:
1 PLAN CHECK CORRECTIONS 2/28/14
2 INTERNAL COORD. REVISIONS 5/27/14
3 INSTRUCTION BULLETIN 3 06/16/2015

PROJECT:
MARRIOTT RESIDENCE INN
- COURTYARD @ LUHRS
A Development of - LUHRS CM, LLC
Phoenix, Arizona

DRAWN: SMV
CHECKED: BKN/TRM
DATE: 12/16/13
PROJECT NO.: 12–1601

SHEET TITLE:
FOUNDATION
DETAILS

SHEET NO.:
S2.2

AWBREY . COOK . McGILL . ARCHITECTS 1045 14th Street Suite 100, San Diego, California 92101.5701 Telephone 619.398.3480 Fax. 619.398.3488

FINAL FOR CONSTRUCTION - 05/18/15

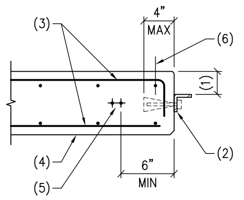

NOTES:

1. VERIFY WITH ELEVATOR MFR.
2. STEEL ANGLE AND EXPANSION ANCHORS PER ELEVATOR MFR.
3. SLAB REINFORCING PER PLAN.
4. CONCRETE SLAB.
5. POST-TENSIONED TENDONS.
6. #5 CONTINUOUS.

216 CONCRETE SLAB EDGE AT ELEVATOR DOORS
13-112 NO SCALE

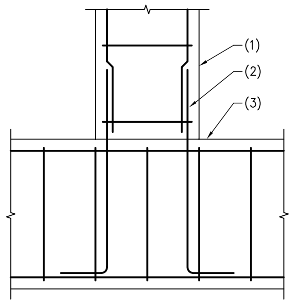

NOTES:

1. CONCRETE COLUMN.
2. DOWELS TO LAP AND MATCH COLUMN REINFORCEMENT.
3. CONCRETE TRANSFER BEAM.

212 CONCRETE COLUMN AT TRANSFER GIRDER
13-112 NO SCALE

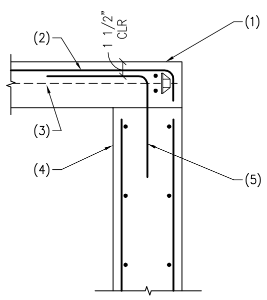

NOTES:

1. CONCRETE SLAB.
2. TOP STEEL PER PLAN.
3. POST-TENSIONED TENDONS.
4. CONCRETE WALL.
5. #4x48"x48" AT 12" O.C.

208 CONCRETE SLAB AT CONCRETE WALL
13-112 NO SCALE

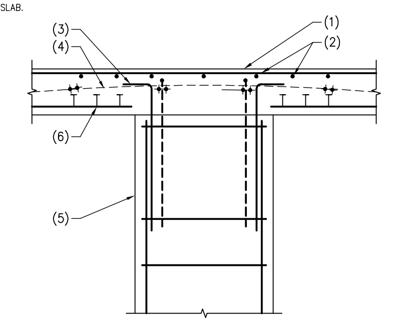

NOTES:

1. POST-TENSION CONCRETE SLAB.
2. TOP STEEL PER PLAN.
3. DOWELS TO MATCH AND LAP VERTICAL REINFORCING. TERMINATE WITH STD HOOK IN SLAB.
4. POST-TENSION TENDON PER PLAN.
5. CONCRETE COLUMN.
6. STUD RAILS WHERE SHOWN ON PLAN.

204 POST-TENSIONED CONCRETE SLAB AT CONCRETE COLUMN
13-112 NO SCALE

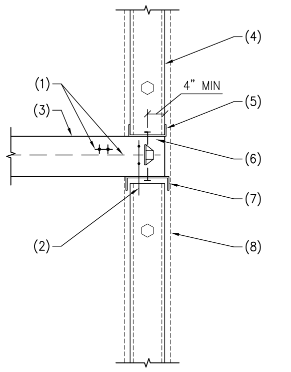

NOTES:

1. POST – TENSIONED TENDON.
2. 2 #4 CONTINUOUS.
3. POST-TENSIONED CONCRETE SLAB.
4. STEEL STUD WALL AS OCCURS.
5. CONTINUOUS STEEL TRACK.
6. SHOT PINS AT 16" O.C. WITH 1 1/4" DIA. MIN EMBEDMENT.
7. CONTINUOUS DEEP LEG SLIP TRACK.
8. SHEATHING MATERIAL AND ATTACHMENT AS OCCURS.

201 POST-TENSIONED CONCRETE SLAB EDGE
13-112 NO SCALE

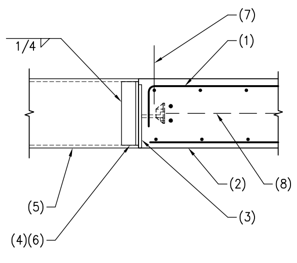

NOTES:

1. DOWELS PER DETAIL 216.
2. CONCRETE SLAB.
3. 1/2"x6x10 STEEL PLATE WITH (2) 1/2" DIA. x 6" LONG HEADED STUDS AT 6" O.C.
4. 2"x2"x1/4"x0'-6" LONG STEEL ANGLE – TYPICAL EACH SIDE OF BEAM.
5. STEEL BEAM.
6. OMIT ANGLES AT OPPOSITE END. WELD BEAM DIRECTLY TO PLATE.
7. #5 CONTINUOUS.
8. POST TENSIONED TENDON.

217 STEEL BEAM AT CONCRETE SLAB
13-112 NO SCALE

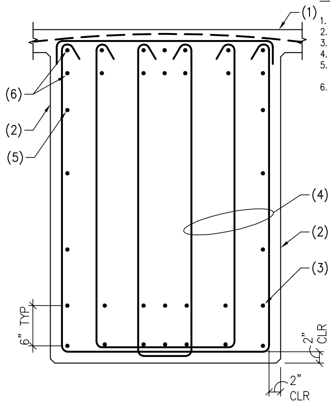

NOTES:

1. CONCRETE SLAB.
2. CONCRETE TRANSFER BEAM.
3. BOTTOM REINFORCING.
4. TIES PER BEAM SCHEDULE.
5. #5 HORIZONTAL EACH FACE AT 12" O.C. MAX.
6. TOP REINFORCING.

213 SECTION – TRANSFER GIRDER
13-112 NO SCALE

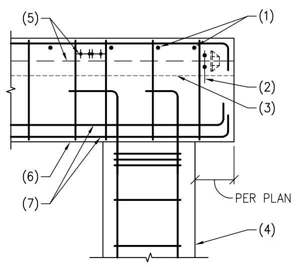

NOTES:

1. SLAB REINFORCING PER PLAN.
2. 2 #4 CONTINUOUS.
3. LINE OF POST-TENSIONED SLAB BEYOND.
4. CONCRETE COLUMN.
5. POST TENSIONED TENDONS PER PLAN.
6. CONCRETE TRANSFER BEAM PER SCHEDULE.
7. BOTTOM STEEL PER SCHEDULE WITH STD HOOK.

209 CONCRETE BEAM AT CONCRETE COLUMN
13-112 NO SCALE

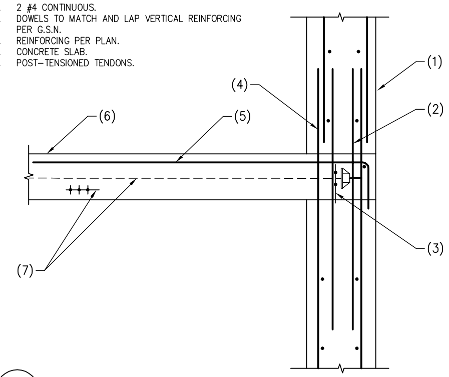

NOTES:

1. CONCRETE WALL.
2. REINFORCING PER DETAIL 206.
3. 2 #4 CONTINUOUS.
4. DOWELS TO MATCH AND LAP VERTICAL REINFORCING PER G.S.N.
5. REINFORCING PER PLAN.
6. CONCRETE SLAB.
7. POST-TENSIONED TENDONS.

205 CONCRETE SLAB AT CONCRETE WALL
13-112 NO SCALE

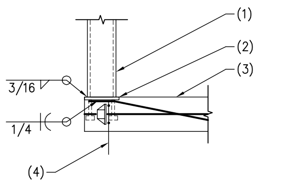

NOTES:

1. STEEL COLUMN.
2. STEEL EMBED PLATE 1/2"x 8"x8" WITH 4-1/2" DIA. x4" HEADED STUDS AT 5" O.C. EACH WAY.
3. POST-TENSIONED CONCRETE SLAB.
4. 2-#4 CONTINUOUS.

202 STEEL COLUMN AT POST – TENSIONED CONCRETE SLAB
13-112 NO SCALE

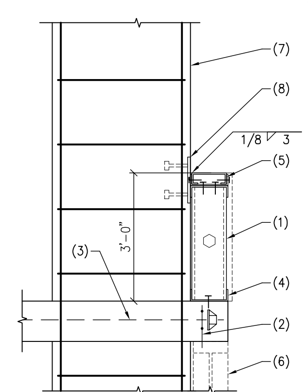

NOTES:

1. 600S162-54 STEEL STUD WALL AT 16" O.C.
2. 2 #4 CONTINUOUS.
3. POST-TENSIONED CONCRETE SLAB.
4. CONTINUOUS STEEL STUD TRACK WITH .145 DIA POWDER ACTUATED FASTENERS AT 16" O.C. MAX WITH 1 1/4" MIN. EMBEDMENT.
5. BUILT-UP STEEL STUD ASSEMBLY PER DETAIL 215. CENTER SPLICE ON CONCRETE COLUMN.
6. STORE FRONT AND CONNECTION BY OTHERS.
7. CONCRETE COLUMN PER PLAN.
8. 1/2"x8"x8" STEEL PLATE WITH (4) 1/2" DIA x 4" LONG HEADED ANCHORS AT 6" O.C. EACH WAY.

1

218 STEEL STUD WALL AT POST-TENSIONED CONCRETE SLAB EDGE
13-112 NO SCALE

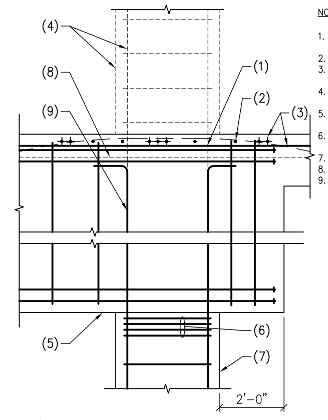

NOTES:

1. BEAM REINFORCING PER SCHEDULE WITH HEADED ENDS.
2. TOP STEEL PER PLAN.
3. POST-TENSIONED TENDONS PER PLAN.
4. COLUMN AND REINFORCING CONTINUOUS AT 214A.
5. CONCRETE TRANSFER BEAM PER SCHEDULE.
6. (4) TIES AT 3" O.C. AT TOP OF COLUMN.
7. CONCRETE COLUMN.
8. LINE OF SLAB BEYOND.
9. COLUMN REINFORCING WITH STANDARD HOOKS.

214 CONCRETE BEAM AT CONCRETE COLUMN
214A AS NOTED
13-112 NO SCALE

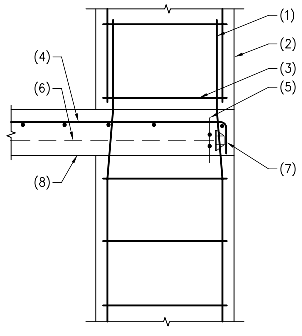

NOTES:

1. DOWELS TO MATCH AND LAP VERTICAL REINFORCING PER TYPICAL LAP DETAIL.
2. CONCRETE COLUMN.
3. TIES PER TYPICAL DETAIL.
4. REINFORCING PER PLAN.
5. 2 #4 CONTINUOUS.
6. POST-TENSIONED TENDON.
7. SKEW HOOKS AS REQUIRED.
8. POST-TENSIONED CONCRETE SLAB.

210 CONCRETE SLAB AT CONCRETE COLUMN
13-112 NO SCALE

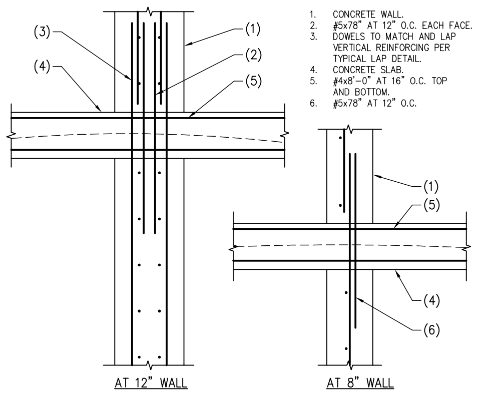

NOTES:

1. CONCRETE WALL.
2. #5x78" AT 12" O.C. EACH FACE.
3. DOWELS TO MATCH AND LAP VERTICAL REINFORCING PER TYPICAL LAP DETAIL.
4. CONCRETE SLAB.
5. #4x8'-0" AT 16" O.C. TOP AND BOTTOM.
6. #5x78" AT 12" O.C.

206 CONCRETE SLAB AT CONCRETE WALL
13-112 NO SCALE

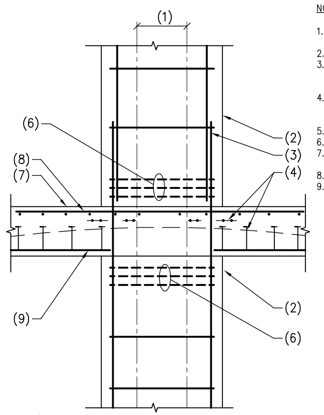

NOTES:

1. 12" WIDTH – NO TENDONS THRU THIS AREA OF COLUMN.
2. CONCRETE COLUMN.
3. DOWELS TO MATCH AND LAP VERTICAL COLUMN REINFORCING PER TYPICAL LAP DETAIL.
4. POST TENSION TENDON, 2 TENDONS MIN. SHALL PASS THRU COLUMN.
5. NOT USED.
6. ADDITIONAL TIES WHERE REQ'D.
7. POST TENSIONED CONCRETE SLAB.
8. TOP STEEL PER PLAN.
9. STUD RAILS WHERE SHOWN ON PLAN.

203 TYPICAL POST TENSIONED SLAB AT CONCRETE COLUMN
13-112 NO SCALE

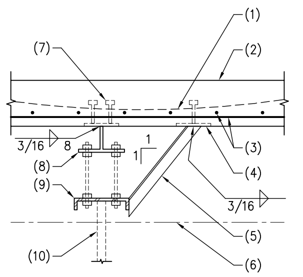

NOTES:

1. POST-TENSIONED TENDONS PER PLAN.
2. POST-TENSIONED CONCRETE SLAB.
3. #5 X 6'-0" LONG AT 12" O.C. TRANSVERSE AND 6 #5 CONTINUOUS.
4. 3/8"x4"x9" STEEL PLATE WITH 2 – 1/2" DIA. X 5" LONG HEADED ANCHORS AT 6" O.C. LOCATE PLATE AT EACH BRACE.
5. 2"x2"x3/16" STEEL ANGLE BRACE AT 8'-0" O.C.
6. LINE OF CEILING PER ARCH'L.
7. 3/8"x12"x12" STEEL PLATE WITH 4 – 1/2" DIA. X 5" LONG HEADED ANCHORS AT 9" O.C. EACH WAY. LOCATE PLATE AT 4'-0" O.C.
8. WT4x14 X 10" LONG SPACED AT 48" O.C.
9. CONTINUOUS C8x13.7 STEEL CHANNEL WITH 2 – 3/8" DIA. THREADED RODS WITH DOUBLE NUTS. SPACING PER MFR.
10. LINE OF FOLDING PARTITION AND CONNECTION PER MFR.

219 FOLDING PARTITION AT CONCRETE SALB
13-112 NO SCALE

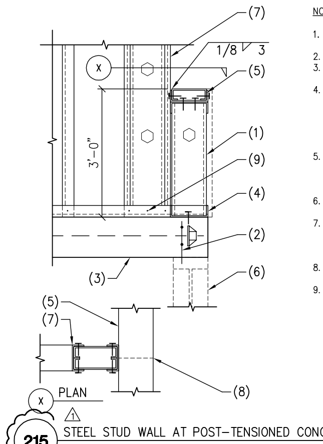

NOTES:

1. 600S162-54 STEEL STUD WALL AT 16" O.C.
2. 2 #4 CONTINUOUS.
3. POST-TENSIONED CONCRETE SLAB.
4. CONTINUOUS STEEL STUD TRACK WITH .145 DIA POWDER ACTUATED FASTENERS AT 16" O.C. MAX WITH 1 1/4" MIN. EMBEDMENT.
5. 600T150-54 BACK-TO-BACK TRACK WITH 2 #10 SCREWS AT 16" O.C. WITH NESTED 600S162-54 STEEL STUD.
6. STORE FRONT AND CONNECTION BY OTHERS.
7. 600S162-54 BOXED STEEL STUD COLUMN WITH 16 GA STEEL TRACK. LOCATE AT END OF EACH PARTY WALL.
8. LOCATE SPLICE ON CENTER OF BOXED STUD COLUMN.
9. 3 #10 SCREWS AT STEEL TRACK EACH SIDE OF BOXED COLUMN – TYP TOP AND BOTTOM.

1

215 STEEL STUD WALL AT POST-TENSIONED CONCRETE SLAB EDGE
13-112 NO SCALE

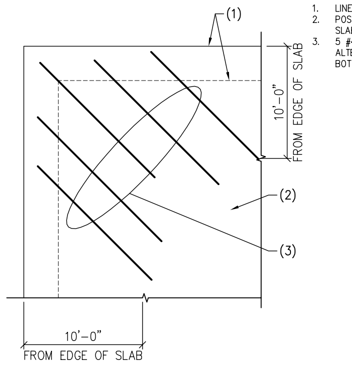

NOTES:

1. LINE OF WALL AS OCCURS.
2. POST-TENSIONED CONCRETE SLAB.
3. 5 #4 x 14'-0" AT 12" O.C. ALTERNATIVELY TOP AND BOTTOM.

211 REINFORCEMENT AT SLAB CORNERS
13-112 NO SCALE

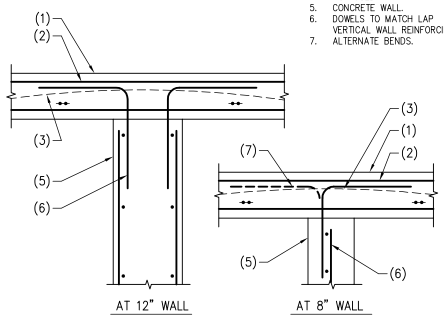

NOTES:

1. CONCRETE SLAB.
2. #4 x 8'-0" AT 16" O.C. TOP AND BOTTOM.
3. POST-TENSIONED TENDONS.
4. NOT USED.
5. CONCRETE WALL.
6. DOWELS TO MATCH LAP VERTICAL WALL REINFORCING.
7. ALTERNATE BENDS.

207 CONCRETE SLAB AT CONCRETE WALL
13-112 NO SCALE

THESE DRAWINGS/CALCULATIONS ARE CONSIDERED PRELIMINARY –NOT FOR CONSTRUCTION OR RECORDING UNLESS THE STRUCTURAL ENGINEER OF RECORD'S SEAL IS AFFIXED WITH WRITTEN SIGNATURE.

AWBREY
COOK
MCGILL
architects
1045 14th Street, Suite 100
San Diego, CA 92101-5701
Phone: 619 . 398 . 3480

ARCHITECTS:

THOMAS B. AWBREY	C 17578
CLIFFORD W. COOK	C 19705
SCOT W. McGILL	C 21059

Registered Professional Engineer (Structural)
CERTIFICATE NO.
42194
BRADY K.
NOTBOHM
8/22/14
Date Signed
ARIZONA, U.S.A.
EXPIRES 03-31-17

Copyright © 2014
AWBREY COOK MCGILL ARCHITECTS
All ideas, designs, and arrangements indicated on these drawings are the property of AWBREY COOK MCGILL ARCHITECTS and are intended to be used in connection with this specific project only and shall not otherwise be used for any purpose whatsoever without the written consent of the architects. There shall be no changes or deviations from these drawings or the accompanying specifications without the written consent of the architects.

CONSULTANTS:

CARUSO
TURLEY
SCOTT
INC.
consulting
structural
engineers
1215 W. Rio Salado Pkwy
Suite 200
Tempe, Arizona 85281
(480) 774-1700
(480) 774-1701 FAX
www.ctsaz.com

ENGINEER: TRM/BKN – JOB NUMBER: 13-112

REVISIONS:

1 PLAN CHECK CORRECTIONS 2/28/14

PROJECT:

MARRIOTT RESIDENCE INN
- COURTYARD @ LUHRS
A Development of - LUHRS CM, LLC
Phoenix, Arizona

DRAWN:	SMV
CHECKED:	BKN/TRM
DATE:	12/16/13
PROJECT NO.:	12-1601

SHEET TITLE:
FRAMING
DETAILS

SHEET NO.:
S3.1

AWBREY . COOK . McGILL . ARCHITECTS 1045 14th Street Suite 100, San Diego, California 92101.5701 Telephone 619.398.3480 Fax. 619.398.3488

FINAL FOR CONSTRUCTION - 05/18/15

C:\Users\dft18\Documents\JOBS\13112\13-112S31.dwg, 8/20/2014 3:24:17 PM

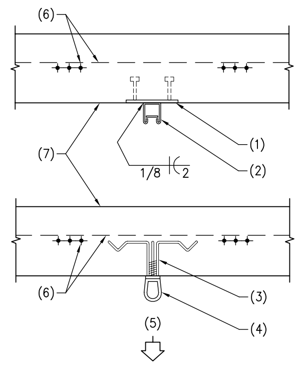

NOTES:

1. 3/8"x4"x9" STEEL EMBED PLATE WITH 2 – 3/4" DIA. X 6" LONG HEADED STUDS AT 6" O.C. LOCATE PLATES WITHIN 6" OF EACH END OF UNISTRUT AND AT 48" O.C. FULL LENGTH OF UNISTRUT, EACH ROW.
2. CONTINUOUS P1000 UNISTRUT.
3. T-1 1 1/4" DIA. COIL INSERT BY DAYTON/ RICHMOND.
4. F-49 1 1/4" EYE BOLT BY DAYTON/ RICHMOND (EYE BOLT SHALL BE TIGHTENED FIRMLY AGAINST FACE OF CONCRETE).
5. EYE BOLT IS INTENDED FOR STRAIGHT TENSILE LOADING ONLY; PULLING OR LIFTING AT AN ANGLE IS NOT ALLOWED.
6. POST-TENSIONED TENDONS.
7. CONCRETE SLAB.

NOTE:
SEE ELECTRICAL DRAWING E4.5 FOR ADDITIONAL INFORMATION.

236 COIL INSERT AND UNISTRUT AT CONCRETE SLAB AT APS VAULT
13–112 NO SCALE

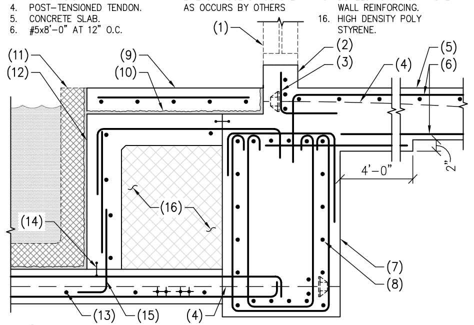

NOTES:

1. GLASS STOREFRONT PER ARCH'L.
2. 6" CONCRETE CURB WITH #5 CONTINUOUS.
3. #4x12"x24" HOOKED DOWELS AT 16" O.C.
4. POST-TENSIONED TENDON.
5. CONCRETE SLAB.
6. #5x8'–0" AT 12" O.C.
7. CONCRETE BEAM.
8. #5 AT 12" O.C.
9. CONCRETE TOPPING SLAB.
10. WATERPROOF MEMBRANE PER ARCH'L.
11. LINE OF POOL STRUCTURE AS OCCURS BY OTHERS
12. 8" CONCRETE WALL AND SLAB WITH #5 AT 16" O.C. EACH WAY.
13. REINFORCING PER PLAN.
14. WATER STOP PER ARCH'L.
15. DOWELS TO MATCH AND LAP WALL REINFORCING.
16. HIGH DENSITY POLY STYRENE.

232 CONCRETE BEAM AT POOL
13–112 NO SCALE

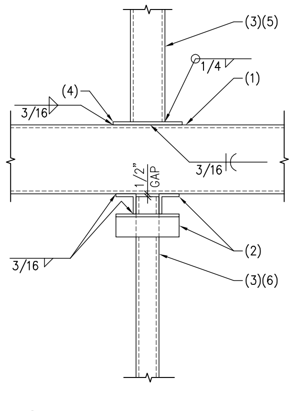

NOTES:

1. STEEL BEAM.
2. 3'x3"x1/4"x0'–4" STEEL ANGLE SNUG TO EACH SIDE OF COLUMN (4 TOTAL). DO NOT WELD TO COLUMN.
3. HSS 6x4x3/8" STEEL COLUMN.
4. 1/2"x5"x12" STEEL PLATE.
5. OMIT STEEL COLUMN AT DETAIL 228A.
6. OMIT STEEL COLUMN AT DETAIL 228B.

228 STEEL COLUMN AT STEEL BEAM
228A 228B AS NOTED
13–112 NO SCALE

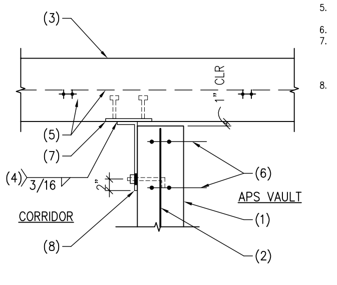

NOTES:

1. CONCRETE WALL.
2. VERTICAL WALL REINFORCING.
3. POST-TENSIONED CONCRETE SLAB.
4. WELD 3 SIDES.
5. POST-TENSIONED TENDONS AS OCCUR.
6. 2 #5 AT 8" O.C.
7. 3/8"x8"x8" STEEL PLATE WITH 2– 1/2" DIA. x 4" LONG HEADED STUDS AT 8" O.C. ON THE DIAGONAL.
8. STEEL BENT PLATE 12"x3 1/2"x5/16" (LLV)x0'–4" LONG WITH 3/4" DIA. ANCHOR BOLT CENTERED IN 2" LONG VERTICALLY SLOTTED HOLE. 5" EMBEDMENT OF BOLT.

NOTE:
LOCATE CONNECTION AT 8'–0" O.C. NOT LESS THAN 2 PLATES MINIMUM PER LENGTH OF WALL. FOR TYPICAL LINTEL AT OPENING, SEE ML SCHEDULE.

224 CONCRETE WALL AT CONCRETE SLAB
13–112 NO SCALE

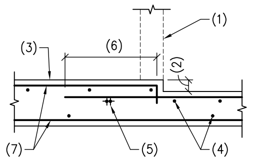

NOTES:

1. STORE FRONT OR STUD WALL AS SHOWN ON ARCH'L DRAWINGS.
2. STEP PER PLAN – 2" MAX.
3. CONCRETE SLAB.
4. REINFORCING PER PLAN.
5. POST – TENSIONED TENDONS.
6. LAP PER TYPICAL DETAIL.
7. SLAB REINFORCING PER PLAN.

221 1 STEP IN POST – TENSION CONCRETE SLAB
13–112 NO SCALE

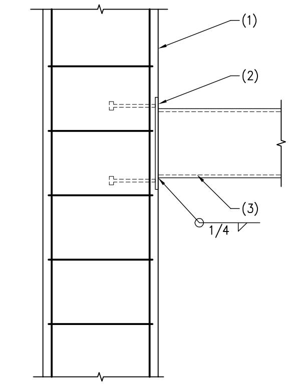

NOTES:

1. CONCRETE COLUMN.
2. 1/2"x16"x16" STEEL PLATE WITH 4 – 3/4" DIA. X 0'–8" LONG HEADED ANCHORS AT 12" O.C. EACH WAY.
3. STEEL BEAM.

237 STEEL BEAM AT CONCRETE COLUMN
13–112 NO SCALE

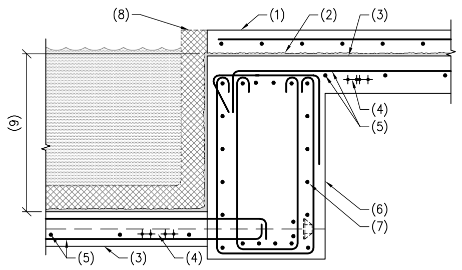

NOTES:

1. CONCRETE TOPPING SLAB WITH #3 AT 18" O.C. EACH WAY (6" THICK MAX).
2. WATER PROOF MEMBRANE PER ARCH'L.
3. CONCRETE SLAB.
4. POST-TENSIONED TENDONS.
5. REINFORCING PER PLAN.
6. CONCRETE BEAM.
7. #5 AT 12" O.C.
8. LINE OF POOL STRUCTURE BY OTHERS.
9. 4'–9" MIN (VERIFY WITH POOL DRAWINGS).

233 2 CONCRETE BEAM AT POOL
13–112 NO SCALE

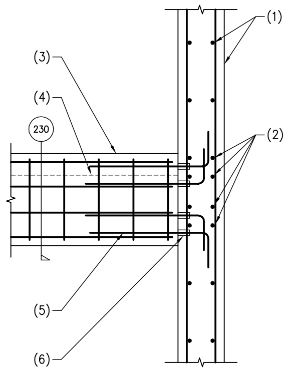

NOTES:

1. CONCRETE WALL AND REINFORCING PER SHEAR WALL ELEVATIONS.
2. SPECIAL REINFORCING PER SHEAR WALL ELEVATIONS.
3. CONCRETE BEAM PER PLAN.
4. LINE OF SLAB BEYOND AS OCCURS.
5. HORIZONTAL DOWELS TO MATCH AND LAP BEAM REINFORCING.
6. AT CONTRACTORS OPTION: DOWELS CAN BE INSTALLED USING ICC APPROVED THREADED INSERTS PER G.S.N.

229 CONCRETE BEAM AT CONCRETE WALL
13–112 NO SCALE

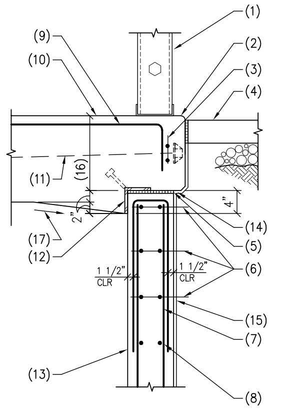

NOTES:

1. STEEL STUD WALL PER DETAIL 201 WHERE OCCURS.
2. TOOLED EDGE.
3. PT BACKUP BARS PER PLAN.
4. CONCRETE SLAB.
5. 1/8" TEMPERED WOOD PARTICLE BOARD (MASONITE OR APPROVED EQUAL) OVER TROWEL SMOOTHED WALL.
6. 6 #5 HORIZONTALS AT TOP OF WALL AT 12" O.C. TO REPLACE WALL HORIZONTAL REINFORCING.
7. #3 "U" BARS WITH 36" LONG LEGS AT 12" O.C.
8. WALL REINFORCING.
9. SLAB REINFORCING PER PLAN.
10. POST-TENSIONED CONCRETE SLAB.
11. POST-TENSION TENDONS AS OCCURS.
12. CONTINUOUS 4"x4"x1/4" GALVANIZED STEEL ANGLE WITH 1/2" DIA x 4" LONG HEADED ANCHORS SPACED AT 24" O.C.
13. CONCRETE WALL.
14. SEALANT PER ARCH'L.
15. CONTINUOUS WATERPROOFING PER ARCH'L.
16. 8" MIN.
17. 2" OVER 5 FT.

225 POST-TENSIONED CONCRETE SLAB AT CONCRETE WALL
13–112 NO SCALE

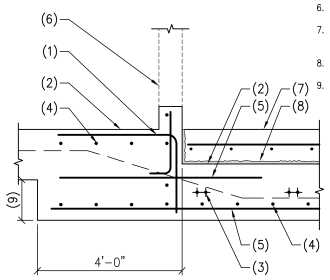

NOTES:

1. #5x10"x48" AT 18" O.C. (SLV).
2. POST-TENSIONED CONCRETE SLAB.
3. POST-TENSION TENDON.
4. #5 CONTINUOUS TYPICAL WHERE SHOWN.
5. #5x8'–0" AT 12" O.C.
6. STORE FRONT OR STUD WALL PER ARCHITECTURAL.
7. CONCRETE TOPPING SLAB (6" MAX) WITH #3 AT 18" O.C. EACH WAY.
8. WATERPROOF MEMBRANE PER ARCHITECTURAL.
9. DEPTH TO MATCH STEP IN SLAB.

222 SECTION AT STEP IN SLAB
13–112 NO SCALE

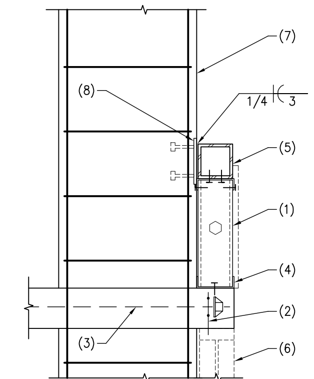

NOTES:

1. 600S162–54 STEEL STUD AT 16" O.C.
2. 2 #4 CONTINUOUS.
3. POST-TENSIONED CONCRETE SLAB.
4. CONTINUOUS STEEL STUD TRACK WITH .145 DIA POWDER ACTUATED FASTENERS AT 16" O.C. MAX WITH 1 1/4" MIN. EMBEDMENT.
5. HSS 6x6x3/8" STEEL BEAM. CENTER SPLICE ON CONCRETE COLUMN.
6. STORE FRONT AND CONNECTION BY OTHERS.
7. CONCRETE COLUMN PER PLAN.
8. 1/2"x8"x8" STEEL PLATE WITH (4) 1/2" DIA x 4" LONG HEADED ANCHORS AT 6" O.C. EACH WAY.

238 1 STEEL STUD WALL AT POST-TENSIONED CONCRETE SLAB EDGE
13–112 NO SCALE

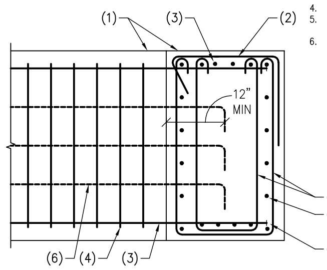

NOTES:

1. CONCRETE BEAM.
2. CAP BAR TO MATCH TIE REINFORCING.
3. REINFORCING PER BEAM SCHEDULE.
4. TIES PER BEAM SCHEDULE.
5. PROVIDE HEADED ENDS FOR BEAM REINFORCING TYPICAL.
6. #5 AT 12" O.C.

234 CONCRETE BEAM AT CONCRETE BEAM
13–112 NO SCALE

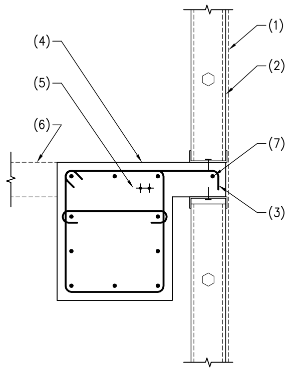

NOTES:

1. SHEATHING MATERIAL AND ATTACHMENT PER ARCH'L.
2. STEEL STUD FRAMING.
3. #5 HORIZONTAL REINFORCING WITH STANDARD HOOK AT 16" O.C.
4. CONCRETE BEAM PER PLAN.
5. POST-TENSIONED TENDONS AS OCCURS.
6. LINE OF CONCRETE SLAB AS OCCURS.
7. #5 CONTINUOUS.

230 STEEL STUD WALL AT CONCRETE BEAM
13–112 NO SCALE

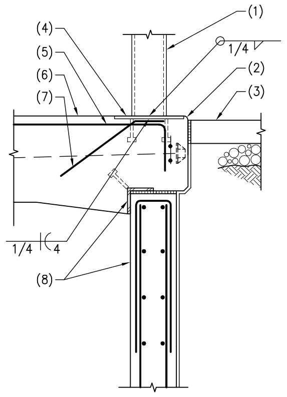

NOTES:

1. STEEL COLUMN.
2. TOOLED EDGE.
3. CONCRETE SLAB.
4. 1/2"x12"x12" STEEL PLATE WITH (4) 3/4" DIA X 6" LONG HEADED STUDS AT 9" O.C. EACH WAY.
5. SLAB REINFORCING PER PLAN.
6. POST-TENSIONED CONCRETE SLAB.
7. (2) #4 x 6" x 12" BENT BARS AT 6" O.C.
8. CONTINUOUS STEEL ANGLE AND CONCRETE WALL PER DETAIL 225.

226 STEEL COLUMN AT CONCRETE SLAB
13–112 NO SCALE

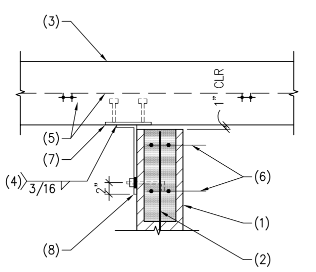

NOTES:

1. MASONRY WALL.
2. VERTICAL WALL REINFORCING.
3. POST-TENSIONED CONCRETE SLAB.
4. WELD 3 SIDES.
5. POST-TENSIONED TENDONS AS OCCUR.
6. 4 #5 IN 16" DEEP BOND BEAM.
7. 3/8"x8"x8" STEEL PLATE WITH 2– 1/2" DIA. x 4" LONG HEADED STUDS AT 8" O.C. ON THE DIAGONAL.
8. STEEL BENT PLATE 12"x3 1/2"x5/16" (LLV)x0'–4" LONG WITH 3/4" DIA. ANCHOR BOLT CENTERED IN 2" LONG VERTICALLY SLOTTED HOLE. 5" EMBEDMENT OF BOLT.

NOTE:
LOCATE CONNECTION AT 8'–0" O.C. NOT LESS THAN 2 PLATES MINIMUM PER LENGTH OF WALL. FOR TYPICAL LINTEL AT OPENING, SEE ML SCHEDULE.

223 MASONRY WALL AT CONCRETE SLAB
13–112 NO SCALE

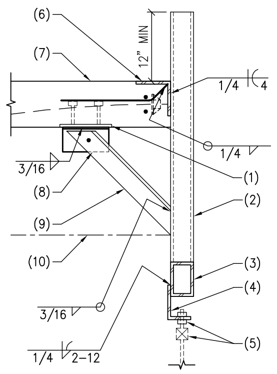

NOTES:

1. 3/8"x10"x10" STEEL PLATE WITH 4 – 1/2" DIA. X 4" LONG HEADED STUDS AT 6" O.C. EACH WAY.
2. HSS 4x4x1/4" STEEL POST \ AT 8'–0" O.C.
3. HSS 6x4x1/4" STEEL BEAM.
4. CONTINUOUS 6"x4"x5/16" STEEL ANGLE.
5. NANA WALL AND CONNECTION PER MFR.
6. 6"x6" X 10" LONG STEEL ANGLE WITH #4 X 4"x16" BENT BAR AT 8" O.C.
7. POST-TENSIONED CONCRETE SLAB.
8. 3/8"x6"x8" STEEL PLATE (SLV) WITH 3/4" DIA. THRU BOLT.
9. 3"x3"x1/4" STEEL ANGLE.
10. LINE OF CEILING PER ARCH'L.

239 NANA WALL CONNECTION AT CONCRETE SLAB
13–112 NO SCALE

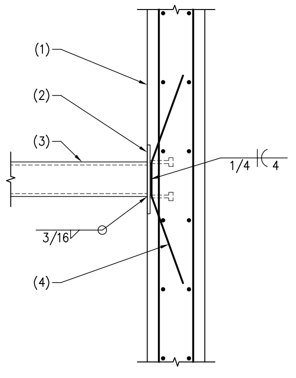

NOTES:

1. CONCRETE WALL.
2. 1/2"X12"x12" STEEL PLATE WITH (4) 1/2" DIA. X 6" LONG HEADED ANCHORS AT 9" O.C. EACH WAY.
3. STEEL BEAM.
4. (2) #4x16"x6"x16" BENT BARS AT 6" O.C.

235 STEEL BEAM AT CONCRETE WALL
13–112 NO SCALE

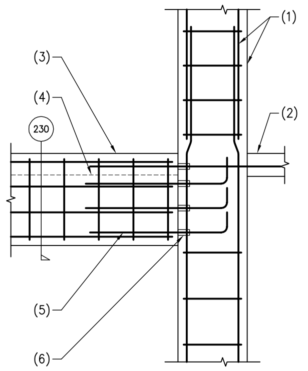

NOTES:

1. CONCRETE COLUMN AND REINFORCING PER PLAN.
2. POST-TENSIONED CONCRETE SLAB.
3. CONCRETE BEAM PER PLAN.
4. LINE OF SLAB BEYOND AS OCCURS.
5. HORIZONTAL DOWELS TO MATCH AND LAP BEAM REINFORCING.
6. AT CONTRACTORS OPTION: DOWELS CAN BE INSTALLED USING ICC APPROVED THREADED INSERTS PER G.S.N.

231 CONCRETE BEAM AT CONCRETE COLUMN
13–112 NO SCALE

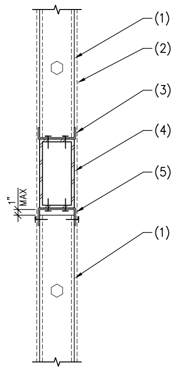

NOTES:

1. STEEL STUD FRAMING AT SHAFT WALL.
2. SHEATHING MATERIAL AND ATTACHMENT PER ARCH'L.
3. CONTINUOUS STEEL TRACK WITH HILTI "X-U" SHOT PINS AT 16" O.C. STAGGERED.
4. STEEL BEAM.
5. CONTINUOUS 18 GA. DEEP LEG SLIP TRACK WITH HILTI "X-U" SHOT PINS AT 16" O.C. STAGGERED. DO NOT ATTACH SHEATHING MATERIAL DIRECTLY TO SLIP TRACK.

227 STEEL STUD FRAMING AT STEEL BEAM
13–112 NO SCALE

AWBREY
COOK
MCGILL
architects
1045 14th Street, Suite 100
San Diego, CA 92101-5701
Phone: 619 . 398 . 3480

ARCHITECTS:
THOMAS B. AWBREY C 17578
CLIFFORD W. COOK C 19705
SCOT W. McGILL C 21059

Registered Professional Engineer (Structural)
CERTIFICATE NO. 42194
BRADY K. NOTBOHM
8/22/14
Date Signed
ARIZONA, U.S.A.
EXPIRES 03-31-17

Copyright © 2014
AWBREY COOK MCGILL ARCHITECTS
All ideas, designs, and arrangements indicated on these drawings are the property of AWBREY COOK MCGILL ARCHITECTS and are intended to be used in connection with this specific project only and shall not otherwise be used for any purpose whatsoever without the written consent of the architects. There shall be no changes or deviations from these drawings or the accompanying specifications without the written consent of the architects.

CONSULTANTS:

CARUSO
TURLEY
SCOTT
INC.
consulting
structural
engineers
1215 W. Rio Salado Pkwy
Suite 200
Tempe, Arizona 85281
(480) 774–1700
(480) 774–1701 FAX
www.ctsaz.com

ENGINEER: TRM/BKN – JOB NUMBER: 13–112

REVISIONS:

1 PLAN CHECK CORRECTIONS 2/28/14
2 INTERNAL COORD. REVISIONS 5/27/14

THESE DRAWINGS/CALCULATIONS ARE CONSIDERED PRELIMINARY –NOT FOR CONSTRUCTION OR RECORDING UNLESS THE STRUCTURAL ENGINEER OF RECORD'S SEAL IS AFFIXED WITH WRITTEN SIGNATURE.

PROJECT:

MARRIOTT RESIDENCE INN
- COURTYARD @ LUHRS
A Development of - LUHRS CM, LLC
Phoenix, Arizona

DRAWN: SMV
CHECKED: BKN/TRM
DATE: 12/16/13
PROJECT NO.: 12–1601
SHEET TITLE:
FRAMING DETAILS
SHEET NO.:
S3.2

FINAL FOR CONSTRUCTION - 05/18/15

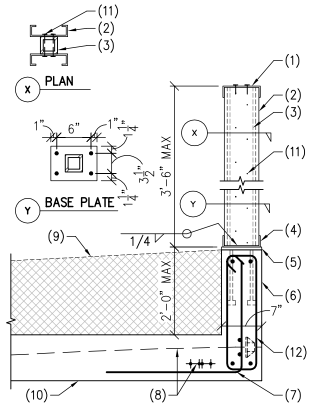

316 STEEL POST AT CONCRETE SLAB
13–112 NO SCALE

NOTES:

1. CONTINUOUS 600T150–54 STEEL TRACK. CENTER SPLICE ON COLUMN.
2. 600S162–54 STEEL STUDS AT 24" O.C. MAX.
3. HSS 4x4x1/4" STEEL POST WITH 1/4" THICK CAP PLATE AT 8'–0" O.C. MAX.
4. CONTINUOUS BOTTOM STEEL TRACK. WITH HILTI 'X–U' SHOT PINS AT 12" O.C. STAGGERED WITH 3/4" MIN EMBEDMENT.
5. 1/2"x6"x8" STEEL PLATE WITH (4) 1/2" DIA. X 6" LONG HEADED ANCHORS.
6. CONCRETE CURB WITH 2 #4 CONTINUOUS TOP AND BOTTOM.
7. #5 HOOKED DOWEL AT 16" O.C.
8. POST–TENSIONED TENDONS.
9. SLOPED INSULATION PER ARCH'L.
10. CONCRETE SLAB.
11. HILTI 'X–U' SHOT PINS AT 12" O.C. STAGGERED. INSTALL 2 PINS WITHIN 2" OF TOP OF POST.
12. 2 #3 TIES AT EACH COLUMN.

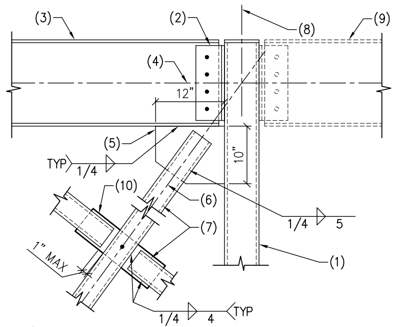

312 STEEL BEAM AND X–BRACING TO STEEL COLUMN CONNECTION
13–112 NO SCALE

NOTES:

1. STEEL COLUMN.
2. CONNECTION PER DETAIL 303.
3. STEEL BEAM.
4. C/L OF STEEL BEAM.
5. 1/2" STEEL GUSSET.
6. C/L OF STEEL BRACE.
7. HSS 4x4x1/4" STEEL BRACE.
8. C/L OF COLUMN.
9. LINE OF BEAM AS OCCURS.
10. 1/2"x5"x16" STEEL PLATE.

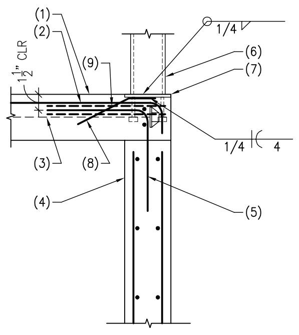

308 CONCRETE SLAB AT CONCRETE WALL
13–112 NO SCALE

NOTES:

1. CONCRETE SLAB.
2. TOP STEEL PER PLAN.
3. POST–TENSIONED TENDONS.
4. CONCRETE WALL.
5. #4x48"x48" AT 12" O.C.
6. STEEL COLUMN.
7. 1/2"x10"x10" STEEL PLATE W/ 4–3/4" DIA. x 6" LONG HEADED STUDS AT 8" O.C. EACH WAY.
8. 2 #4x4"x12" BENT AS SHOWN AT 6" O.C.
9. 2 #3x36" LONG HAIR PINS AT 3" O.C. AROUND ANCHORS.

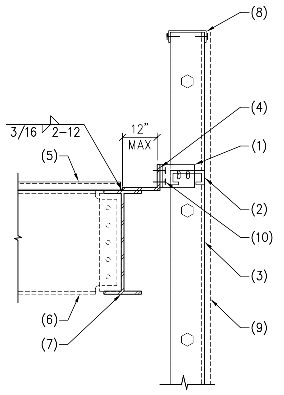

304 STEEL DECK TO STEEL BEAM
13–112 NO SCALE

NOTES:

1. 4"x6"x16 GA X 0'–4" LONG CLIP ANGLE WITH 2–#10 SCREWS THRU 1 1/2" LONG VERTICALLY SLOTTED HOLES.
2. STEEL STUD BLOCKING – SAME SIZE AND GAGE AS STUDS.
3. STEEL STUDS.
4. CONTINUOUS 1/4" BENT PLATE.
5. STEEL DECK – FOR DIRECTION OF DECK, SEE PLAN.
6. STEEL BEAM AS OCCURS.
7. STEEL BEAM.
8. CONT STEEL STUD TRACK.
9. SHEATHING MATERIAL AND ATTACHMENTS AS OCCURS.
10. 2 HILTI 'X–U' SHOT PINS.

NOMINAL BEAM DEPTH "D"	NUMBER OF 7/8" DIA ASTM A325N BOLTS
UP TO 7"	2
8" – 11"	2
12" – 14"	3
15" – 17"	4
18" – 20"	5
21" – 23"	6
24" – 29"	7
30" – 32"	8
33" – 35"	9
36"	10

301 BOLT SCHEDULE FOR TYPICAL STEEL CONNECTIONS
401–11.01M NO SCALE

FRAMING NOTES:

1. THE TYPICAL STEEL BEAM TO STEEL COLUMN OR STEEL BEAM TO STEEL BEAM CONNECTION CONSISTS OF 3/8" SINGLE SHEAR PLATES WITH BOLTS PER SCHEDULE. USE 5/8" SHEAR PLATES WHERE "D" = 27" OR GREATER.
2. ALL BOLTS SHALL BE INSTALLED THROUGH "SHORT" SLOTTED HOLES IN EITHER THE BEAM WEB OR SHEAR PLATE. INSTALL WASHERS AND TIGHTEN "SNUG TIGHT" U.N.O.
3. CONNECTIONS REQUIRING DOUBLE ANGLES OR BENT PLATES WILL BE MARKED ON THE PLANS WITH AN ASTERISK (*). ALL DOUBLE ANGLES SHALL BE 4"x4"x1/4" AND ALL BENT PLATES SHALL BE 1/4" THICK – DETAIL PER SECTION 10 OF THE AISC STEEL CONSTRUCTION MANUAL.

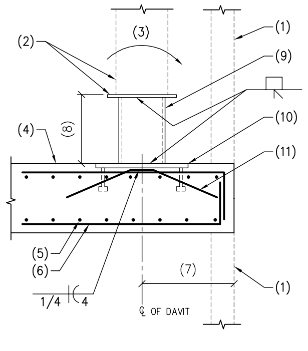

317 DAVIT BASE AT CONCRETE SLAB
13–112 NO SCALE

NOTES:

1. STUD OR CURTAIN WALL AS OCCURS – SEE OTHER DETAILS FOR CONNECTION TO SLAB.
2. DAVIT AND BASE PLATE PER MANUFACTURER.
3. DESIGN MOMENT=49,100 FT–LBS (FACTORED LOAD).
4. CONCRETE SLAB – TYPICAL REINFORCING NOT SHOWN FOR CLARITY.
5. 8 #5 x 8'–0" TOP AND BOTTOM.
6. 8 #5 x 6'–0"x10" (SLV) AT 6" O.C. SKEW HOOKS AS REQUIRED AT SLAB EDGE.
7. 16" MIN., 24" MAX. – VERIFY WITH WINDOW WASHING SYSTEM SUPPLIER.
8. 16" MAX. – VERIFY W/ WINDOW WASHING SYSTEM SUPPLIER.
9. 8" DIA. X–STRONG PIPE W/ 3/4" CAP PLATE. PROVIDE DAVIT CONNECTION PER MANUFACTURER.
10. 3/4"x16"x16" STEEL PLATE W/ (4) 3/4" DIA x 6" LONG HEADED ANCHORS AT 13 1/2" O.C. EACH WAY.
11. (2) #4 x 12"x4"x12" BENT BARS AT 6" O.C.

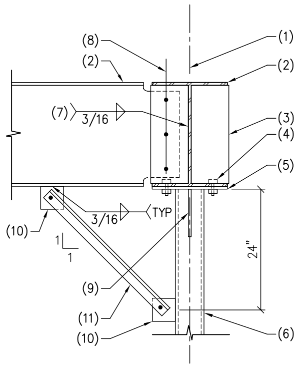

313 STEEL BEAM TO STEEL COLUMN CONNECTION
415–51.03M NO SCALE

NOTES:

1. CENTERLINE OF COLUMN.
2. STEEL BEAM.
3. 3/8" STIFFENER PLATE EACH SIDE OF BEAM. WHERE INTERSECTING STEEL BEAM OCCURS INSTALL SHEAR PLATE PER TYPICAL BEAM TO BEAM CONNECTION DETAIL.
4. 4–3/4" DIA BOLTS ON BEAM GAGE.
5. 1/2" CAP PLATE.
6. STEEL COLUMN.
7. WELD 3 SIDES – TYPICAL.
8. FOR SIZE, TYPE, AND NUMBER OF BOLTS, SEE TYPICAL BOLT SCHEDULE.
9. 3/8" STEEL GUSSET PLATE. CENTER ON BEAM.
10. 3/8"x4"x4" STEEL PLATE.
11. 2"x2"x3/16" STEEL ANGLE BRACE WITH (1) 3/4" DIA THRU BOLT EACH END.

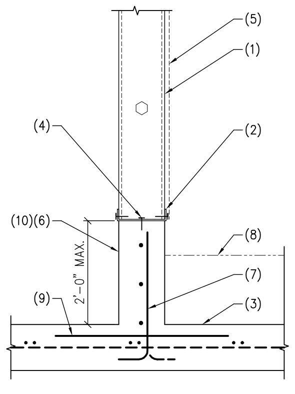

309 STEEL STUD WALL AT CONCRETE SLAB
309A AS NOTED
13–112 NO SCALE

NOTES:

1. STEEL STUD WALL.
2. CONTINUOUS BOTTOM TRACK.
3. CONCRETE SLAB.
4. HILTI 'X–U' SHOT PINS AT 16" O.C. MAX. – 1 1/4" MIN EMBEDMENT.
5. SHEATHING MATERIAL AND ATTACHMENT PER ARCH'L.
6. 6" WIDE CONCRETE CURB W/3 #4 CONTINUOUS.
7. #4 HOOKED DOWELS AT 16" O.C. – ALTERNATE BENDS.
8. LINE OF ROOFING MATERIAL PER ARCH'L DRAWINGS.
9. #4x3'–0" LONG AT 16"O.C. CENTER ON CONCRETE CURB.
10. OMIT CONCRETE CURB AND REINFORCING AT DETAIL 309A.

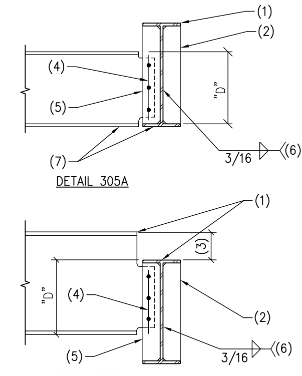

DETAIL 305A

DETAIL 305

305 STEEL BEAM TO STEEL BEAM CONNECTION
305A AS NOTED
413–37M NO SCALE

NOTES:

1. STEEL BEAM.
2. 3/8" STIFFENER PLATE.
3. DEPTH TO MATCH THICKNESS OF ADJACENT FLOOR SLAB.
4. FOR SIZE, TYPE AND NUMBER OF BOLTS, SEE TYPICAL BOLT SCHEDULE.
5. SHEAR PLATE, PER TYPICAL CONNECTION DETAIL.
6. WELD 3 SIDES – TYPICAL.
7. ALIGN BOTTOM OF BEAMS AT DETAIL 305A.

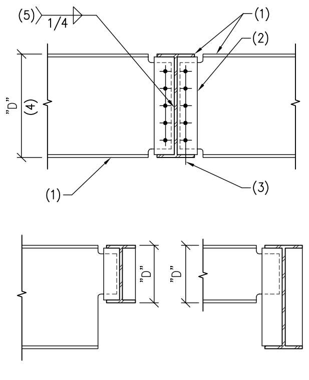

302 TYPICAL CONNECTION WIDE FLANGE BEAM TO BEAM
413–01 NO SCALE

NOTES:

1. STEEL BEAM.
2. 3/8" STEEL SHEAR PLATE – USE 5/8" STEEL SHEAR PLATE WHERE "D" = 27" OR GREATER.
3. FOR SIZE, TYPE AND NUMBER OF BOLTS, SEE TYPICAL BOLT SCHEDULE.
4. "D" = LESSER OF BEAM DEPTHS AS OCCURS.
5. WELD 3 SIDES TYPICAL – USE SAME CONNECTION AT STIFFENER PLATES WHEN REQUIRED.

NOTE:

A. AT ONE SIDED CONNECTIONS, INSTALL 3/8" STIFFENER PLATE OPPOSITE SHEAR PLATE.
B. EDGE CLEARANCES PER THE FOLLOWING – TYP U.N.O.:
   3/4" DIA OR LESS – 1 1/4"
   7/8" DIA ------- 1 1/2"
   1" DIA --------- 1 3/4"
   1 1/8" DIA ------ 2"
   1 1/4" DIA ------ 2 1/4"
   OVER 1 1/4" DIA -- 1.75xDIA

NOTES:

1. HSS 8x8x3/8" CONTINUOUS BEAMS SPACED AT 6'–0" O.C MAX. VERIFY WITH LOUVER MFR.
2. LOUVER AND CONNECTION PER MANUFACTURER.
3. HSS 10x10x5/16" MAIN COLUMNS AT 26'–0" O.C. MAX.
4. NOT USED.
5. HSS 10x10x5/16" BRACE AT EACH MAIN COLUMN.
6. 1/2"x16"x16" STEEL EMBED PLATE WITH 4 – 3/4" DIA. X 4" LONG HEADED STUDS AT 12" O.C. EACH WAY.
7. POST–TENSIONED CONCRETE ROOF STRUCTURE.
8. 4 #5 x 6'–0" AT 6" O.C. EACH WAY TOP AND BOTTOM.

NOTE:
LOUVERS SHALL BE DESIGNED FOR 29 PSF WIND LOADING.

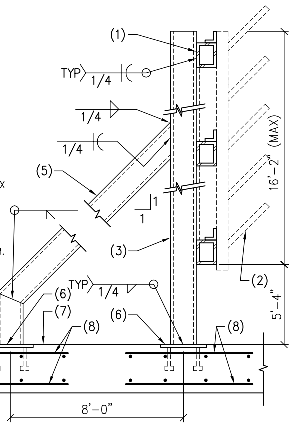

318 MECHANICAL SCREEN FRAME AT ROOF LEVEL
13–112 NO SCALE

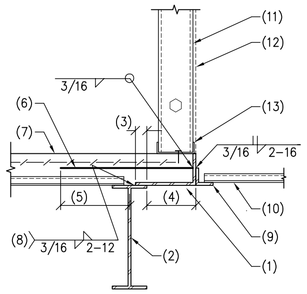

NOTE:
WHEN 1/4" BENT PLATE EXCEEDS 6" IN LENGTH, PLATE MUST BE SHORED UNTIL CONCRETE REACHES DESIGN STRENGTH.

314 STEEL DECK AT STEEL BEAM
466–01.02M NO SCALE

NOTES:

1. 1/4" CONTINUOUS BENT STEEL PLATE.
2. STEEL BEAM.
3. 2" TYPICAL.
4. 0" TO 6" NO REINFORCING REQUIRED.
   6" TO 12" ADD #4 REINFORCING. AT 12" O.C.
   12" TO 18" ADD #5 REINFORCING. AT 12" O.C.
5. 2'–0" MINIMUM.
6. REINFORCING WHERE REQUIRED.
7. CONCRETE OVER STEEL DECK – FOR DIRECTION OF DECK, SEE PLANS.
8. WELD ANGLE TO BEAM – TYP.
9. CONTINUOUS 3"x3"x1/4" STEEL LEDGER ANGLE.
10. STEEL DECK PER G.S.N.
11. STEEL STUD FRAMING AT 16" O.C.
12. SHEATHING MATERIAL AND ATTACHMENT AS OCCURS.
13. CONTINUOUS STEEL TRACK WITH SHOT PINS AT 16" O.C.

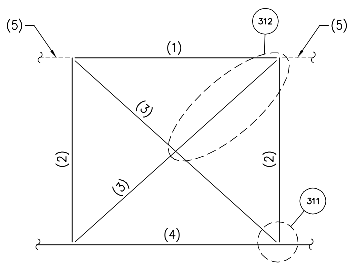

310 ELEVATION – X–BRACED FRAME
13–112 NO SCALE

NOTES:

1. STEEL BEAM.
2. STEEL COLUMN.
3. STEEL ANGLE BRACE.
4. LINE OF CONCRETE ROOF SLAB.
5. LINE OF BEAM AS OCCURS.

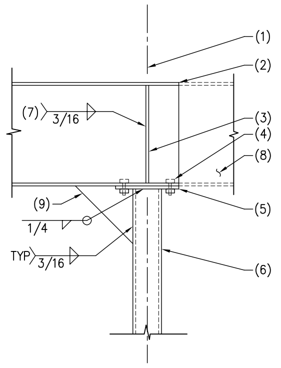

306 STEEL BEAM TO STEEL COLUMN CONNECTION
415–51.03M NO SCALE

NOTES:

1. CENTERLINE OF COLUMN.
2. STEEL BEAM.
3. 3/8" STIFFENER PLATE EACH SIDE OF BEAM. WHERE INTERSECTING STEEL BEAM OCCURS INSTALL SHEAR PLATE PER TYPICAL BEAM TO BEAM CONNECTION DETAIL.
4. 4–3/4" DIA BOLTS ON BEAM GAGE.
5. 1/2" CAP PLATE.
6. STEEL COLUMN.
7. WELD 3 SIDES – TYPICAL.
8. STEEL BEAM CONTINUOUS WHERE SHOWN ON PLAN.
9. 3/8" STEEL GUSSET PLATE. CENTER ON BEAM.

NOTE:
STUDS WELDED TO BOTTOM OF FLANGE MAY BE USED IN LIEU OF BOLTS.

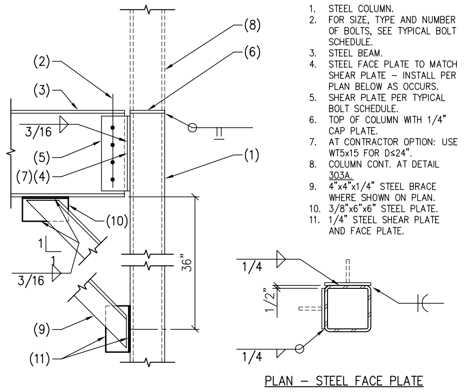

PLAN – STEEL FACE PLATE

303 STEEL BEAM TO STEEL COLUMN CONNECTION
303A AS NOTED
414–61M NO SCALE

NOTES:

1. STEEL COLUMN.
2. FOR SIZE, TYPE AND NUMBER OF BOLTS, SEE TYPICAL BOLT SCHEDULE.
3. STEEL BEAM.
4. STEEL FACE PLATE TO MATCH SHEAR PLATE – INSTALL PER PLAN BELOW AS OCCURS.
5. SHEAR PLATE PER TYPICAL BOLT SCHEDULE.
6. TOP OF COLUMN WITH 1/4" CAP PLATE.
7. AT CONTRACTOR OPTION: USE WT5x15 FOR D≤24".
8. COLUMN CONT. AT DETAIL 303A.
9. 4"x4"x1/4" STEEL BRACE WHERE SHOWN ON PLAN.
10. 3/8"x6"x6" STEEL PLATE.
11. 1/4" STEEL SHEAR PLATE AND FACE PLATE.

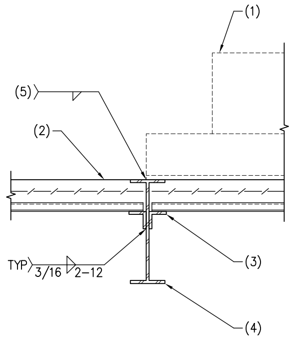

319 ELEVATOR MACHINE AT STEEL BEAM
13–112 NO SCALE

NOTES:

1. ELEVATOR MACHINE BY OTHERS.
2. CONCRETE OVER STEEL DECK.
3. CONTINUOUS 4"x4"x1/4" STEEL LEDGER ANGLE.
4. STEEL BEAM.
5. CONNECTION PER ELEVATOR MFR.

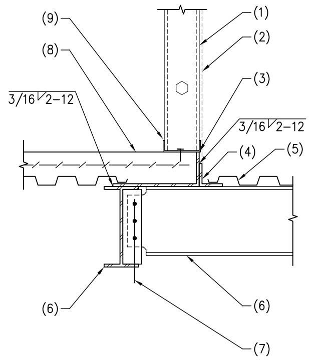

315 STEEL STUD WALL AT STEEL BEAM
13–112 NO SCALE

NOTES:

1. STEEL STUD FRAMING AT 16" O.C.
2. SHEATHING MATERIAL AND ATTACHMENT AS OCCURS.
3. CONTINUOUS 1/4" STEEL BENT PLATE.
4. CONTINUOUS 3"X3"x1/4" STEEL ANGLE.
5. STEEL ROOF DECK PER G.S.N.
6. STEEL BEAM.
7. FOR SIZE, TYPE AND NUMBER OF BOLTS, SEE TYPICAL BOLT SCHEDULE.
8. CONCRETE OVER STEEL DECK.
9. CONTINUOUS STEEL TRACK WITH HILTI 'X–U' SHOT PINS AT 16" O.C.

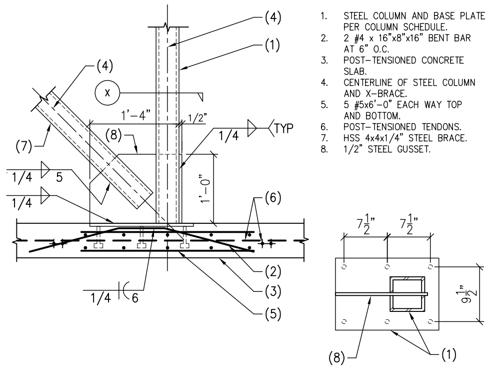

311 STEEL COLUMN AND X–BRACING
13–112 NO SCALE

NOTES:

1. STEEL COLUMN AND BASE PLATE PER COLUMN SCHEDULE.
2. 2 #4 x 16"x8"x16" BENT BAR AT 6" O.C.
3. POST–TENSIONED CONCRETE SLAB.
4. CENTERLINE OF STEEL COLUMN AND X–BRACE.
5. 5 #5x6'–0" EACH WAY TOP AND BOTTOM.
6. POST–TENSIONED TENDONS.
7. HSS 4x4x1/4" STEEL BRACE.
8. 1/2" STEEL GUSSET.

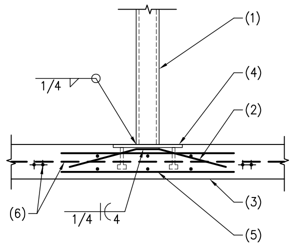

307 STEEL COLUMN AT CONCRETE SLAB
13–112 NO SCALE

NOTES:

1. STEEL COLUMN.
2. 2 #4 x 12"x4"x12" BENT BARS AT 6" O.C.
3. POST–TENSIONED CONCRETE SLAB.
4. 1/2"x12"x12" STEEL BASE PLATE WITH 4–3/4" DIA x 0'–6" LONG HEADED STUDS AT 9" O.C. EACH WAY.
5. 5 #5x6'–0" EACH WAY TOP AND BOTTOM.
6. POST–TENSIONED TENDONS.

THESE DRAWINGS/CALCULATIONS ARE CONSIDERED PRELIMINARY –NOT FOR CONSTRUCTION OR RECORDING UNLESS THE STRUCTURAL ENGINEER OF RECORD'S SEAL IS AFFIXED WITH WRITTEN SIGNATURE.

AWBREY COOK MCGILL
architects
1045 14th Street, Suite 100
San Diego, CA 92101-5701
Phone: 619 . 398 . 3480

ARCHITECTS:	
THOMAS B. AWBREY	C 17578
CLIFFORD W. COOK	C 19705
SCOT W. McGILL	C 21059

Registered Professional Engineer (Structural)
CERTIFICATE NO. 42194
BRADY K. NOTBOHM
8/22/14
Date Signed
ARIZONA, U.S.A.
EXPIRES 03-31-17

Copyright © 2014
AWBREY COOK MCGILL ARCHITECTS
All ideas, designs, and arrangements indicated on these drawings are the property of AWBREY COOK MCGILL ARCHITECTS and are intended to be used in connection with this specific project only and shall not otherwise be used for any purpose whatsoever without the written consent of the architects. There shall be no changes or deviations from these drawings or the accompanying specifications without the written consent of the architects.

CONSULTANTS:

CARUSO TURLEY SCOTT INC.
consulting structural engineers
1215 W. Rio Salado Pkwy
Suite 200
Tempe, Arizona 85281
(480) 774–1700
(480) 774–1701 FAX
www.ctsaz.com

ENGINEER: TRM/BKN – JOB NUMBER: 13–112

REVISIONS:

△1	PLAN CHECK CORRECTIONS	2/28/14
△2	INTERNAL COORD. REVISIONS	5/27/14

PROJECT:

MARRIOTT RESIDENCE INN
- COURTYARD @ LUHRS
A Development of - LUHRS CM, LLC
Phoenix, Arizona

DRAWN:	SMV
CHECKED:	BKN/TRM
DATE:	12/16/13
PROJECT NO.:	12–1601

SHEET TITLE:
FRAMING DETAILS

SHEET NO.:
S4.1

AWBREY . COOK . McGILL . ARCHITECTS 1045 14th Street Suite 100, San Diego, California 92101.5701 Telephone 619.398.3480 Fax. 619.398.3488

FINAL FOR CONSTRUCTION - 05/18/15

C:\Users\dff18\Documents\JOBS\13112\13-112S41.dwg, 8/20/2014 3:26:26 PM

335 STEEL COLUMN TO STEEL BEAM

13–112 NO SCALE

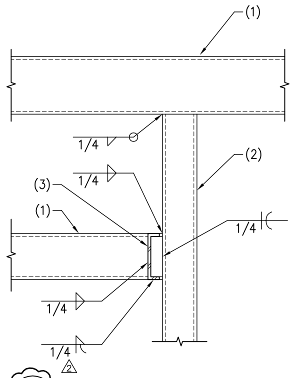

1. STEEL BEAM.
2. STEEL COLUMN.
3. STEEL CANOPY BEAM.

NOTE:
STEEL CANOPY DECK NOT SHOWN FOR CLARITY.

331 STEEL STUD WALL AT STEEL BEAM

13–112 NO SCALE

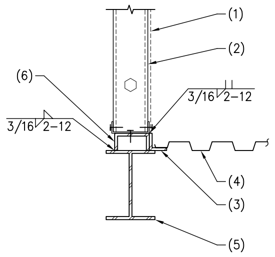

NOTES:

1. SHEATHING MATERIAL AND ATTACHMENT AS OCCURS.
2. STEEL STUD WALL.
3. CONT. STEEL LEDGER FROM BEYOND.
4. STEEL DECK PER G.S.N.
5. STEEL BEAM.
6. BENT 1/4" STEEL 'U' PLATE TO MATCH DEPTH OF ADJACENT FLOOR DECK.

324 STEEL BEAM AT CONCRETE COLUMN

13–112 NO SCALE

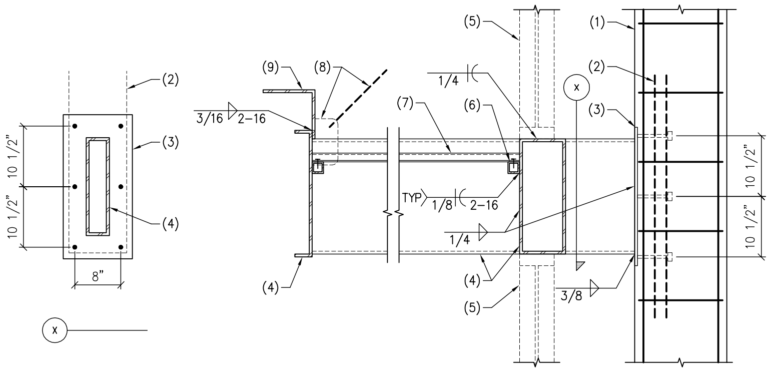

NOTES:

1. CONCRETE COLUMN.
2. 2 #4 X 72" LONG HAIRPINS AT 3" O.C.
3. 1/2"x12"x24" STEEL PLATE WITH 6 – 3/4" DIA. X 8" LONG HEADED ANCHORS AT 8" O.C.
4. STEEL BEAM PER PLAN.
5. STOREFRONT OR STUD WALL AS OCCURS.
6. CONTINUOUS HSS 2x2x1/8" STEEL LEDGER.
7. STEEL CANOPY DECK AND ATTACHMENT PER G.S.N.
8. LINE OF TIE ROD CONNECTION AS OCCURS.
9. CONTINUOUS 3/8"x9"x9" STEEL BENT PLATE.

321 STEEL STUD FRAMING AT STEEL BEAM

13–112 NO SCALE

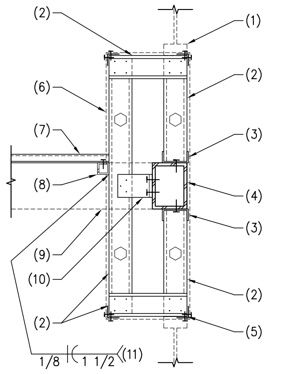

NOTES:

1. STOREFRONT AND CONNECTION BY OTHERS.
2. 362S162–43 STEEL STUD FRAMING AT 16" O.C.
3. CONTINUOUS STEEL TRACK WITH SHOT PINS AT 16" O.C.
4. STEEL BEAM.
5. CONTINUOUS 2"x2" X 18 GA STEEL ANGLE WITH #10 SCREWS AT EACH STUD.
6. SHEATHING MATERIAL AND ATTACHMENT PER ARCH'L.
7. STEEL CANOPY DECK AND ATTACHMENT PER G.S.N.
8. CONTINUOUS LEDGER FROM BEYOND.
9. LINE OF BEAM BEYOND.
10. 6"x6" X 18 GA X 6" LONG CLIP ANGLE WITH 3 #10 SCREWS AT STUD AND 2 SHOT PINS AT BEAM. TYP AT EACH STUD.
11. WELD AT EACH STUD.

336 STEEL CANOPY

13–112 NO SCALE

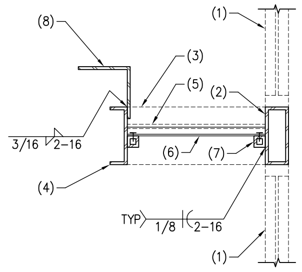

NOTES:

1. STOREFRONT AND CONNECTION BY OTHERS.
2. STEEL BEAM.
3. LINE OF STEEL CANOPY BEAM BEYOND.
4. STEEL CANOPY BEAM.
5. ROOFING MATERIAL PER ARCH'L. SLOPE AS REQ'D.
6. STEEL CANOPY DECK AND ATTACHMENT PER G.S.N.
7. HSS 2x2x1/8 TUBE STEEL LEDGER.
8. 3/8"x9"x9" BENT STEEL PLATE.

332 ELEVATION – COILING DOOR SUPPORT FRAME

13–112 NO SCALE

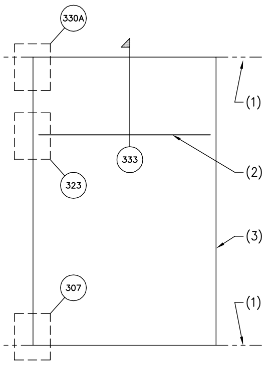

NOTES:

1. LINE OF CONCRETE SALB.
2. HSS 6x6x1/4" STEEL BEAM.
3. STEEL COLUMN.

328 TIE ROD CONNECTION AT STEEL CANOPY BEAM

13–112 NO SCALE

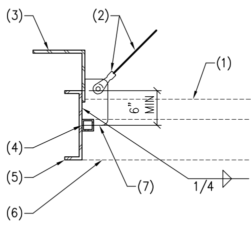

NOTES:

1. LINE OF ROOFING.
2. 3/4" DIA. TIE ROD WITH CLEVIS.
3. CONTINUOUS BENT PLATE.
4. CONTINUOUS LEDGER.
5. CONTINUOUS STEEL FASCIA BEAM.
6. LINE OF BEAM BEYOND.
7. 3/8" X 4" STEEL PLATE. SEE ARCH'L FOR DIMENSIONS AND LOCATION FOR TIE ROD CONNECTIONS.

325 PLAN – STEEL BEAM TO STEEL BEAM

13–112 NO SCALE

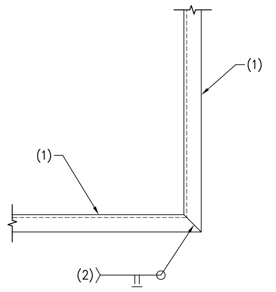

NOTES:

1. STEEL CANOPY BEAM.
2. GRIND EXPOSED WELDS SMOOTH.

322 STEEL BEAM AT CONCRETE WALL

13–112 NO SCALE

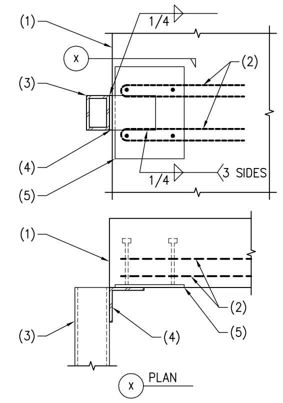

NOTES:

1. CONCRETE WALL.
2. 2–#3 HAIRPINS AT 3" O.C. – TYP WHERE SHOWN.
3. STEEL BEAM.
4. STEEL ANGLE 6x6x3/8 x8" LONG.
5. 1/2"x16"x12" STEEL PLATE W/ 4–3/4" DIA x 8" LONG HEADED ANCHORS AT 12" O.C. VERTICALLY AND 9" O.C. HORIZONTALLY.

NOTE: STEEL STUD FRAMING NOT SHOWN FOR CLARITY.

337 STEEL CANOPY

13–112 NO SCALE

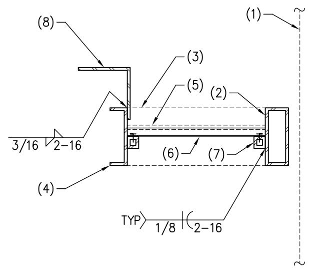

NOTES:

1. LINE OF STOREFRONT AS OCCURS.
2. STEEL BEAM. RADIUS PER ARCH'L.
3. LINE OF STEEL CANOPY BEAM BEYOND.
4. STEEL CANOPY BEAM.
5. ROOFING MATERIAL PER ARCH'L. SLOPE AS REQ'D.
6. STEEL CANOPY DECK AND ATTACHMENT PER G.S.N.
7. HSS 2x2x1/8 TUBE STEEL LEDGER.
8. 3/8"x9"x9" BENT STEEL PLATE.

333 COILING DOOR AT STEEL BEAM

13–112 NO SCALE

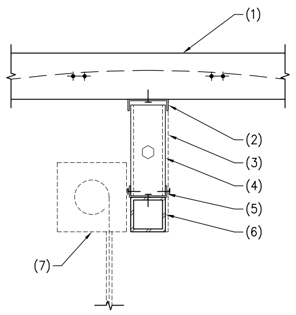

NOTES:

1. POST–TENSIONED CONCRETE SLAB.
2. CONT. DEEP LEG SLIP TRACK W/ SHOT PINS AT 16" O.C.
3. SHEATHING MATERIAL AND ATTACHMENT PER ARCH'L.
4. 600S162–54 STEEL STUD AT 16" O.C.
5. CONT. STEEL TRACK W/ SHOT PINS AT 16" O.C.
6. STEEL BEAM.
7. COILING DOOR AND ATTACHMENT BY OTHERS.

329 STEEL TIE ROD AT CONCRETE SLAB

13–112 NO SCALE

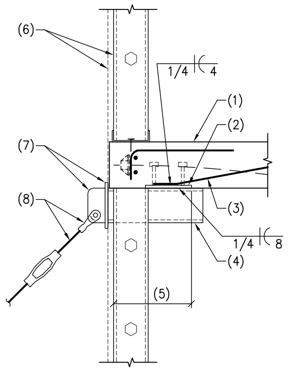

NOTES:

1. POST–TENSIONED CONCRETE SLAB.
2. 1/2"x10"x10" STEEL PLATE WITH 4 – 1/2" DIA. X 4" LONG HEADED ANCHORS AT 7" O.C. EACH WAY.
3. 2 #4 X 6" X 18" BENT BARS AT 4" O.C.
4. HSS 6x6x1/4".
5. 1'–6" FROM EDGE OF SLAB TO CENTERLINE OF EMBED PLATE.
6. STEEL STUD WALL AND EXTERIOR FINISH AS OCCURS.
7. 3/8" STEEL PLATE. SEE ARCH'L FOR DIMENSIONS.
8. 1" DIA. TIE ROD WITH CLEVIS.

326 STEEL BEAM AT STEEL COLUMN

13–112 NO SCALE

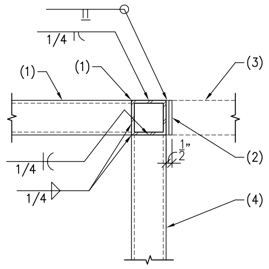

NOTES:

1. STEEL BEAM.
2. 1/4" STEEL CAP PLATE AT END OF BEAM.
3. STEEL BEAM CONTINUOUS WHERE SHOWN ON PLAN.
4. STEEL COLUMN.

323 STEEL COLUMN TO STEEL BEAM

13–112 NO SCALE

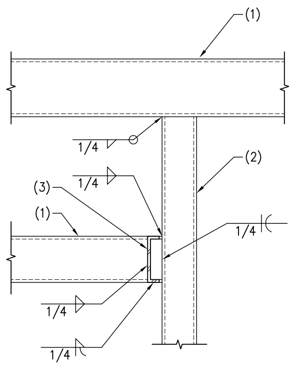

1. STEEL BEAM.
2. STEEL COLUMN.
3. STEEL CANOPY BEAM.

NOTE:
STEEL CANOPY DECK NOT SHOWN FOR CLARITY.

338 STUD WALL SUPPORT AT CONCRETE SLAB

338A AS NOTED

13–112 NO SCALE

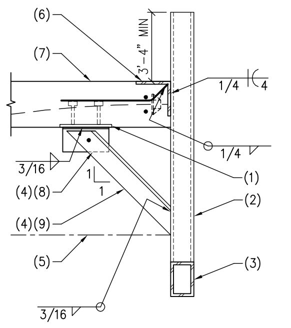

NOTES:

1. 3/8"x10"x10" STEEL PLATE WITH 4 – 1/2" DIA. X 4" LONG HEADED STUDS AT 6" O.C. EACH WAY.
2. HSS 4x4x1/4" STEEL POST AT 8'–0" O.C.
3. HSS 6x4x1/4" STEEL BEAM.
4. OMIT BRACE AND CONNECTION AT DETAIL 338A.
5. LINE OF CEILING PER ARCH'L.
6. 6"x6" X 10" LONG STEEL ANGLE WITH #4 X 4"x16" BENT BAR AT 8" O.C.
7. POST–TENSIONED CONCRETE SLAB.
8. 3/8"x6"x8" STEEL PLATE (SLV) WITH 3/4" DIA. THRU BOLT.
9. 3"x3"x1/4" STEEL ANGLE.

334 STEEL BEAM AT STEEL COLUMN

13–112 NO SCALE

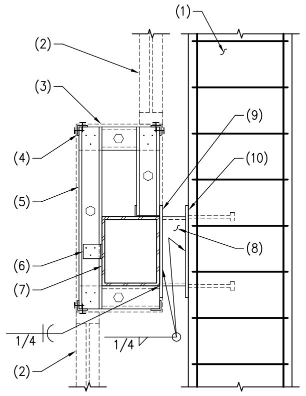

NOTES:

1. CONCRETE COLUMN.
2. STOREFRONT AND CONNECTIONS BY OTHERS.
3. SHEATHING MATERIAL AND ATTACHMENT PER ARCH'L.
4. CONTINUOUS 2"x2"x18 GA STEEL ANGLE W/ #10 SCREWS AT EACH STUD. TYP WHERE SHOWN.
5. 362S162–33 STEEL STUD FRAMING AT 16" O.C. (MIN).
6. CLIP ANGLE 4"x4"x18 GA x4" LONG W/ 3–#10 SCREWS AT EACH STUD AND 2 HILTI 'X-U' SHOT PIN AT BEAM.
7. STEEL BEAM.
8. 1/2"x16"x16" STEEL PLATE.
9. HSS 12x10x3/8 BEAM SPACER.
10. 1/2"x16"x16" STEEL PLATE W/ 4–3/4" DIA x 8" LONG HEADED STUDS AT 12" O.C EACH WAY.

NOTE: SPLICE STEEL BEAM AT CENTER LINE OF STEEL PLATE.

330 STEEL COLUMN AT CONCRETE SLAB

330A AS NOTED

13–112 NO SCALE

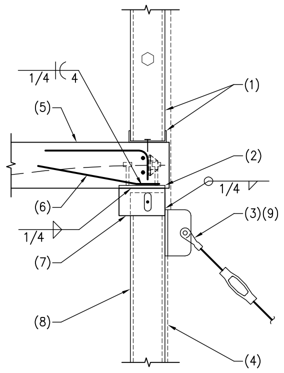

NOTES:

1. STEEL STUD FRAMING AND CONNECTION PER DETAIL 201.
2. 1/2"x10"x10" STEEL PLATE WITH 4 – 1/2" DIA. X 4" LONG HEADED ANCHORS AT 6" O.C. EACH WAY.
3. TIE ROD AND CONNECTION PER ARCH'L.
4. SHEATHING MATERIAL AND ATTACHMENT PER ARCH'L.
5. POST–TENSIONED CONCRETE SLAB.
6. #4 X 6" X 12" BENT BARS AT 4" O.C.
7. 3/8"x6"x8" STEEL PLATE (SLV) EACH SIDE OF COLUMN WITH 3/4" DIA. THRU BOLT. CENTER IN 2" VERTICALLY SLOTTED HOLE.
8. STEEL COLUMN.
9. OMIT TIE ROD AT DETAIL 330A.

327 STEEL BEAM AT STEEL BEAM

13–112 NO SCALE

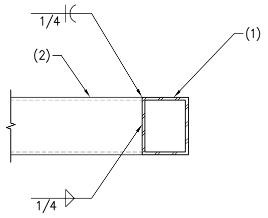

NOTES:

1. CONTINUOUS STEEL BEAM.
2. STEEL BEAM.

AWBREY
COOK
MCGILL
architects
1045 14th Street, Suite 100
San Diego, CA 92101-5701
Phone: 619 . 398 . 3480

ARCHITECTS:

THOMAS B. AWBREY	C 17578
CLIFFORD W. COOK	C 19705
SCOT W. McGILL	C 21059

Registered Professional Engineer (Structural)
CERTIFICATE NO.
42194
BRADY K.
NOTBOHM
8/22/14
Date Signed
ARIZONA, U.S.A.
EXPIRES 03-31-17

Copyright © 2014
AWBREY COOK MCGILL ARCHITECTS
All ideas, designs, and arrangements indicated on these drawings are the property of AWBREY COOK MCGILL ARCHITECTS and are intended to be used in connection with this specific project only and shall not otherwise be used for any purpose whatsoever without the written consent of the architects. There shall be no changes or deviations from these drawings or the accompanying specifications without the written consent of the architects.

CONSULTANTS:

CARUSO
TURLEY
SCOTT
INC.
consulting
structural
engineers
1215 W. Rio Salado Pkwy
Suite 200
Tempe, Arizona 85281
(480) 774–1700
(480) 774–1701 FAX
www.ctsaz.com

ENGINEER: TRM/BKN – JOB NUMBER: 13–112

REVISIONS:

2 INTERNAL COORD. REVISIONS 5/27/14

PROJECT:

MARRIOTT RESIDENCE INN
- COURTYARD @ LUHRS
A Development of - LUHRS CM, LLC
Phoenix, Arizona

DRAWN:	SMV
CHECKED:	BKN/TRM
DATE:	12/16/13
PROJECT NO.:	12–1601

SHEET TITLE:
FRAMING
DETAILS

SHEET NO.:
S4.2

THESE DRAWINGS/CALCULATIONS ARE CONSIDERED PRELIMINARY –NOT FOR CONSTRUCTION OR RECORDING UNLESS THE STRUCTURAL ENGINEER OF RECORD'S SEAL IS AFFIXED WITH WRITTEN SIGNATURE.

AWBREY . COOK . McGILL . ARCHITECTS 1045 14th Street Suite 100, San Diego, California 92101.5701 Telephone 619.398.3480 Fax. 619.398.3488

FINAL FOR CONSTRUCTION - 05/18/15

C:\Users\dfl18\Documents\JOBS\13112\13-112S42.dwg, 8/20/2014 3:27:43 PM

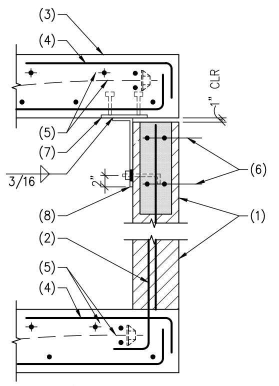

NOTES:

1. 8" MASONRY WALL WITH #5 VERTICALS AT 24" O.C.
2. DOWELS TO MATCH AND LAP VERTICAL WALL REINFORCING PER G.S.N. PROVIDE STANDARD HOOK IN SLAB.
3. CONCRETE SLAB.
4. #5x3'–0"x1'–0" (SLV) AT 12" O.C. SKEW VERTICAL LEG AS REQUIRED AT SLAB EDGE U.N.O. ON PLANS.
5. POST–TENSION TENDONS AS OCCUR.
6. 4 #5 CONTINUOUS IN 16" DEEP BOND BEAM.
7. 3/8"x10"x10" STEEL PLATE WITH 4– 1/2" DIA. X 4" LONG HEADED STUDS AT 7" O.C. EACH WAY.
8. STEEL BENT PLATE 12"x 3 1/2"x5/16" (LLV) X 0'–6" LONG WITH 3/4" DIA. ANCHOR BOLT CENTERED IN 1 1/2" LONG VERTICALLY SLOTTED HOLE. 5" EMBEDMENT OF BOLT.

NOTE:
LOCATE CONNECTION AT 2'–0" FROM END OF WALL AND 8'–0" O.C. MAX. MINIMUM 2 PLATES PER LENGTH OF WALL.

△1 **356** MASONRY WALL AT CONCRETE SLAB
13–112 NO SCALE

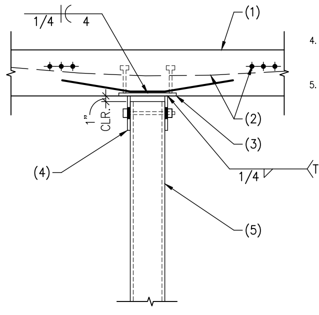

NOTES:

1. POST–TENSIONED SLAB.
2. POST–TENSIONED CABLES AS OCCUR.
3. 1/2"x10"x10" STEEL PLATE WITH 4– 1/2" DIA. x 5" LONG HEADED STUDS AT 8" O.C EACH WAY AND 2– #4x12x6x12 BENT BARS AT 4" O.C.
4. 3/8"x6"x6" STEEL PLATE EACH SIDE WITH 1– 3/4" DIA. THRU BOLT CENTERED IN 2" VERTICALLY SLOTTED HOLE.
5. STEEL COLUMN.

352 STEEL COLUMN AT CONCRETE SLAB
13–112 NO SCALE

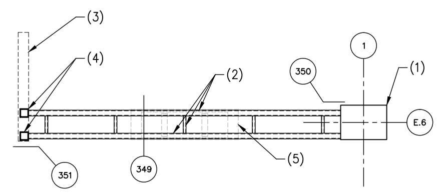

NOTES:

1. CONCRETE COLUMN.
2. STEEL BEAM.
3. STUD WALL PER ARCH'L.
4. STEEL COLUMN PER PLAN.
5. OUTLINE OF FIREPLACE ABOVE.

348 PLAN – FIREPLACE SUPPORT FRAMING
13–112 NO SCALE

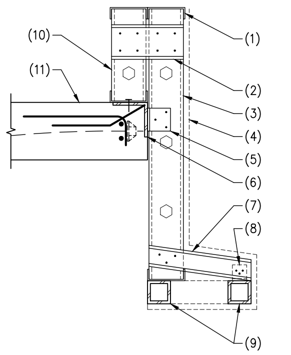

NOTES:

1. CONT. STEEL TRACK.
2. 362S162–43 STEEL STUD BRACE W/ (4) #10 SCREWS WHERE SHOWN.
3. 600S162–54 STEEL STUDS AT 16" O.C.
4. SHEATHING MATERIAL AND ATTACHMENT PER ARCH'L.
5. STEEL CLIP PER DETAIL 342.
6. CONT. ANGLE PER DETAIL 343.
7. 362S162–43 STEEL STUDS AT 16" O.C. W/ (3) #10 SCREWS EACH END.
8. STEEL CLIP ANGLE 4"x4"x18 GA x 4" LONG W/ 3 #10 SCREWS AT STUD AND (2) SHOT PINS AT BEAM.
9. STEEL FRAME PER DETAIL 343.
10. 362S162–43 STEEL STUDS AT 16" O.C.
11. POST–TENSIONED CONCRETE SLAB.

344 STEEL STUDS AT CONCRETE SLAB
13–112 NO SCALE

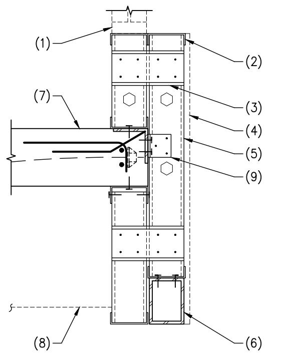

NOTES:

1. STOREFRONT AND CONNECTION BY OTHERS.
2. CONT. STEEL TOP TRACK.
3. 362S162–43 STEEL STUD BRACE W/ 4 #10 SCREWS – TYP WHERE SHOWN.
4. SHEATHING MATERIAL AND ATTACHMENT PER ARCH'L.
5. 600S162–54 STEEL STUDS AT 16" O.C.
6. STEEL BEAM PER DETAIL 338.
7. POST–TENSIONED CONCRETE SLAB.
8. LINE OF CEILING PER ARCH'L AS OCCURS.
9. STEEL CLIP ANGLE 4"x4" X 18 GA X 6" LONG WITH 3 #10 SCREWS AT STUD AND (2) SHOT PINS AT STEEL ANGLE.

341 STEEL STUDS AT CONCRETE SLAB
13–112 NO SCALE

NOTES:

1. CONCRETE WALL.
2. 3/4"x16"x16" STEEL PLATE WITH 6 – 3/4" DIA. X 6 1/4" LONG HILTI 'KWIK HUS–EZ' CONCRETE SCREW ANCHORS
3. W6X15 STEEL BEAM AT 10'–0" O.C. COORDINATE LAYOUT WITH SCAFFOLDING PROVIDER.
4. HSS 5x5x1/4" STEEL BRACE.
5. LINE OF SCAFFOLDING BY OTHERS.
6. LINE OF LEVEL 5 FLOOR SLAB AS OCCURS.
7. 3/8" STEEL STIFFENER PLATE AT EACH SCAFFOLDING LEG AND AT BRACE AS SHOWN.
8. WELD 3 SIDES TYP.

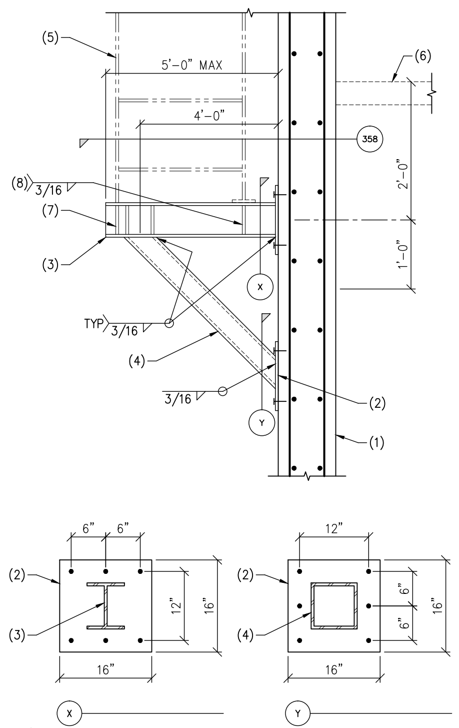

△1 **357** STEEL BEAM SCAFFOLDING HAUNCH AT CONCRETE WALL
13–112 NO SCALE

NOTES:

1. POST–TENSIONED CONCRETE SLAB PER PLAN.
2. DEPTH PER PLAN.
3. THICKENED SLAB PER PLAN.
4. REINFORCING AS OCCURS PER PLAN.
5. 7" STEP PER PLAN.

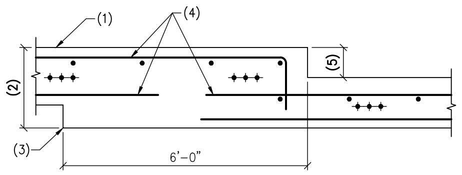

353 POST–TENSIONED THICKENED SLAB
13–112 NO SCALE

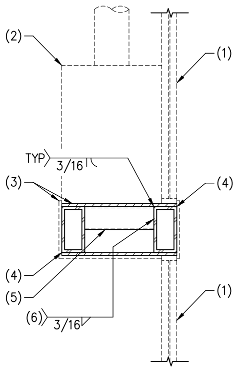

NOTES:

1. STOREFRONT AND CONNECTION BY OTHERS.
2. FIREPLACE – 350# MAX.
3. SHEATHING MATERIAL AND ATTACHMENT PER ARCH'L.
4. HSS 8x4x1/4" STEEL BEAM.
5. HSS 4x2x1/4" STEEL BEAMS AT 48" O.C. MAX.
6. 3 SIDES – TYP.

349 STEEL BEAM AT STOREFRONT
13–112 NO SCALE

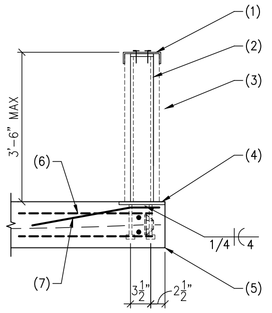

NOTES:

1. CONT. 600T150–54 STEEL TRACK W/ (4) SHOT PINS AT EACH STEEL POST.
2. HSS 4x4x1/4 STEEL POST AT 8'–0" O.C. MAX W/ 1/4" THICK CAP PLATE.
3. LINE OF STEEL STUD WALL.
4. STEEL PLATE 1/2"x6x8 W/ (4) 1/2" DIA x 6" LONG HEADED ANCHORS AT 6" O.C.
5. POST–TENSIONED CONCRETE SLAB.
6. (2) #3x48" HAIRPINS AROUND ANCHORS AT 3" O.C.
7. (2) #4x4"x16" BENT BAR AT 4" O.C.

345 STEEL POST AT CONCRETE SLAB
13–112 NO SCALE

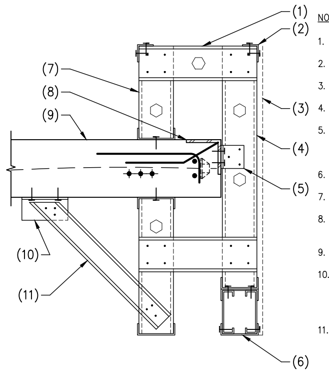

NOTES:

1. 362S162–43 STEEL STUD BRACE AT 16" O.C.
2. CONT. 2x2x18 GA STEEL ANGLE W/ #10 SCREW AT EACH STUD.
3. SHEATHING MATERIAL AND ATTACHMENT PER ARCH'L.
4. 600S162–54 STEEL STUD AT 16" O.C.
5. STEEL CLIP ANGLE 4"x4" X 18 GA X 4" LONG WITH 3 #10 SCREWS AT STUD AND (2) SHOT PINS AT ANGLE.
6. STEEL STUD LINTEL PER DETAIL 24.
7. 362S162–43 STEEL STUDS AT 16" O.C.
8. CONT. 2x2x1/4" STEEL ANGLE W/ #4x18" BENT BAR AT 16" O.C.
9. POST–TENSIONED CONCRETE SLAB.
10. CLIP ANGLE 4"x4" X 18 GA X 6" LONG WITH 3 #10 SCREWS AT STUD AND (2) SHOT PINS AT SLAB W/ 1 1/4" MIN EMBEDMENT.
11. 362S162–43 STEEL STUD BRACE AT 48" O.C. WITH 3 #10 SCREWS EACH END.

342 STEEL STUDS AT CONCRETE SLAB
13–112 NO SCALE

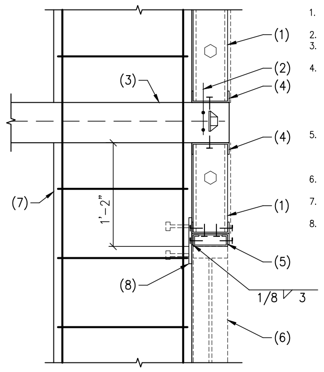

NOTES:

1. 600S162–54 STEEL STUD WALL AT 16" O.C.
2. 2 #4 CONTINUOUS.
3. POST–TENSIONED CONCRETE SLAB.
4. CONTINUOUS STEEL STUD TRACK WITH .145 DIA POWDER ACTUATED FASTENERS AT 16" O.C. MAX WITH 1 1/4" MIN. EMBEDMENT.
5. BUILT–UP STEEL STUD ASSEMBLY PER DETAIL 215. CENTER SPLICE ON CONCRETE COLUMN.
6. STORE FRONT AND CONNECTION BY OTHERS.
7. CONCRETE COLUMN PER PLAN.
8. 1/2"x8"x8" STEEL PLATE WITH (4) 1/2" DIA x 4" LONG HEADED ANCHORS AT 6" O.C. EACH WAY.

NOTE:
SOFFIT FRAMING NOT SHOWN FOR CLARITY.

354 STEEL STUD SOFFIT AT POST–TENSIONED CONCRETE SLAB EDGE
13–112 NO SCALE

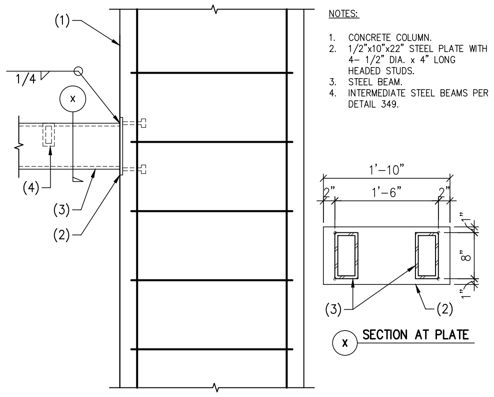

NOTES:

1. CONCRETE COLUMN.
2. 1/2"x10"x22" STEEL PLATE WITH 4– 1/2" DIA. x 4" LONG HEADED STUDS.
3. STEEL BEAM.
4. INTERMEDIATE STEEL BEAMS PER DETAIL 349.

350 STEEL BEAM AT CONCRETE COLUMN
13–112 NO SCALE

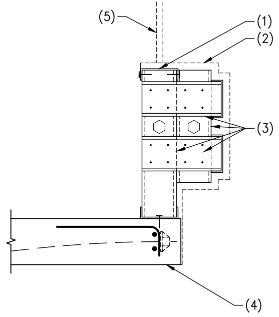

NOTES:

1. CONT. 600T150–54 STEEL TRACK AND CONNECTION PER DETAIL 345.
2. SHEATHING MATERIAL AND ATTACHMENT PER ARCH'L.
3. 600S162–54 STEEL STUD FRAMING AT 16" O.C.
4. POST–TENSIONED CONCRETE SLAB.
5. LINE NANA WALL AS OCCURS.

NOTE:
SEE ARCH'L FOR PROFILE OF STUD WALL.

346 STEEL STUD WALL AT CONCRETE SLAB
13–112 NO SCALE

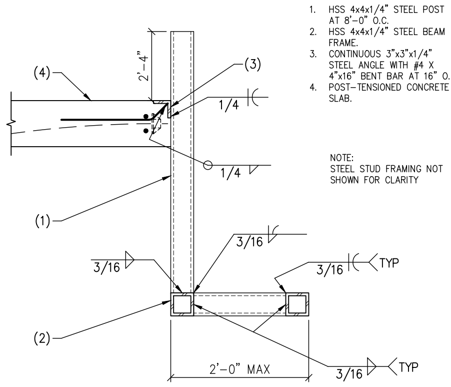

NOTES:

1. HSS 4x4x1/4" STEEL POST AT 8'–0" O.C.
2. HSS 4x4x1/4" STEEL BEAM FRAME.
3. CONTINUOUS 3"x3"x1/4" STEEL ANGLE WITH #4 X 4"x16" BENT BAR AT 16" O.C.
4. POST–TENSIONED CONCRETE SLAB.

NOTE:
STEEL STUD FRAMING NOT SHOWN FOR CLARITY

343 NANA WALL CONNECTION AT CONCRETE SLAB
13–112 NO SCALE

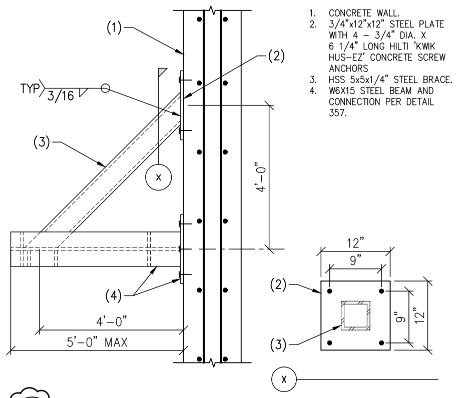

NOTES:

1. CONCRETE WALL.
2. 3/4"x12"x12" STEEL PLATE WITH 4 – 3/4" DIA. X 6 1/4" LONG HILTI 'KWIK HUS–EZ' CONCRETE SCREW ANCHORS
3. HSS 5x5x1/4" STEEL BRACE.
4. W6X15 STEEL BEAM AND CONNECTION PER DETAIL 357.

358 PLAN VIEW–STEEL BEAM SCAFFOLDING HAUNCH AT CONCRETE WALL
13–112 NO SCALE

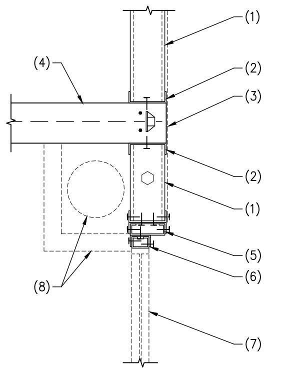

NOTES:

1. 600S162–54 STEEL STUD WALL AT 16" O.C.
2. CONTINUOUS 600T150–54 STEEL TRACK WITH SHOT PINS AT 16" O.C. WITH 1 1/4" MIN EMBEDMENT.
3. SHEATHING AND ATTACHMENT PER ARCH'L.
4. POST–TENSIONED CONCRETE SLAB.
5. 600T150–54 BACK–TO–BACK WITH 2 #10 SCREWS AT 16" O.C. WITH NESTED 600S162–54 STUD.
6. CONTINUOUS 362T150–33 TRACK WITH NESTED 362S162–33 STUD.
7. STOREFRONT AND CONNECTION BY OTHERS.
8. LINE OF SOFFIT FRAMING AND MECHANICAL DUCT AS OCCURS.

NOTE:
SEE DETAIL 215 FOR BACK–TO–BACK TRACK CONNECTION TO INTERIOR PARTY WALLS.

355 STEEL STUD AT CONCRETE SLAB
13–112 NO SCALE

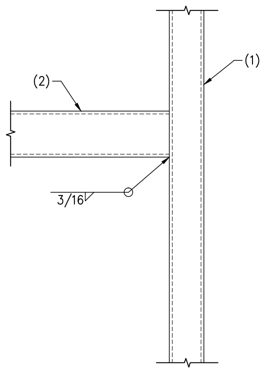

NOTES:

1. STEEL COLUMN.
2. STEEL BEAM.

351 STEEL BEAM AT STEEL COLUMN
13–112 NO SCALE

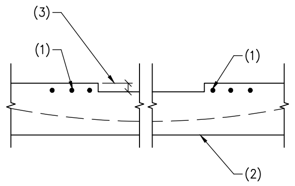

NOTES:

1. 3– #5 EACH SIDE OF DEPRESSION. INSTALL PER DETAIL 17.
2. POST–TENSIONED CONCRETE SLAB.
3. SLAB DEPRESSION 1 1/2" MAX.

347 SHOWER DEPRESSION IN CONCRETE SLAB
13–112 NO SCALE

THESE DRAWINGS/CALCULATIONS ARE CONSIDERED PRELIMINARY –NOT FOR CONSTRUCTION OR RECORDING UNLESS THE STRUCTURAL ENGINEER OF RECORD'S SEAL IS AFFIXED WITH WRITTEN SIGNATURE.

AWBREY
COOK
MCGILL
architects
1045 14th Street, Suite 100
San Diego, CA 92101-5701
Phone: 619 . 398 . 3480

ARCHITECTS:

THOMAS B. AWBREY	C 17578
CLIFFORD W. COOK	C 19705
SCOT W. McGILL	C 21059

42194
BRADY K. NOTBOHM
2/27/15
EXPIRES 03-31-17

Copyright © 2014
AWBREY COOK MCGILL ARCHITECTS
All ideas, designs, and arrangements indicated on these drawings are the property of AWBREY COOK MCGILL ARCHITECTS and are intended to be used in connection with this specific project only and shall not otherwise be used for any purpose whatsoever without the written consent of the architects. There shall be no changes or deviations from these drawings or the accompanying specifications without the written consent of the architects.

CONSULTANTS:

CARUSO TURLEY SCOTT INC.
consulting structural engineers
1215 W. Rio Salado Pkwy
Suite 200
Tempe, Arizona 85281
(480) 774-1700
(480) 774-1701 FAX
www.ctsaz.com

ENGINEER: TRM/BKN – JOB NUMBER: 13–112

REVISIONS:

△A	ADDENDUM A	02/02/15
△1	INSTRUCTION BULLETIN 1	02/23/15

PROJECT:

MARRIOTT RESIDENCE INN
- COURTYARD @ LUHRS
A Development of - LUHRS CM, LLC
Phoenix, Arizona

DRAWN:	SMV
CHECKED:	BKN/TRM
DATE:	12/16/13
PROJECT NO.:	12–1601

SHEET TITLE:
FRAMING DETAILS

SHEET NO.:
S4.3

AWBREY . COOK . McGILL . ARCHITECTS 1045 14th Street Suite 100, San Diego, California 92101.5701 Telephone 619.398.3480 Fax. 619.398.3488

FINAL FOR CONSTRUCTION - 05/18/15

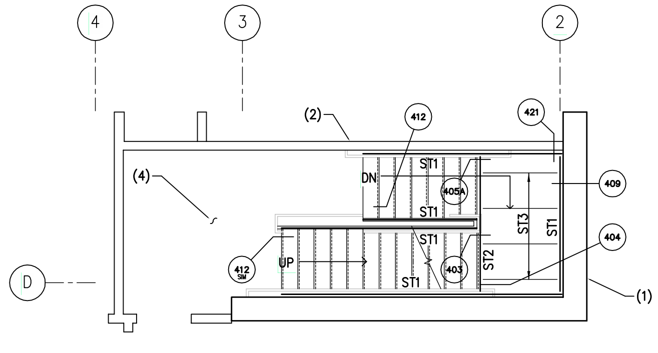
4
3
2
D
(2)
412
421
(4)
ST1
DN
405A
409
ST3
ST1
412
UP
ST1
403
ST2
404
ST1
(1)

5 STAIR #1 PLAN – FOURTH LEVEL

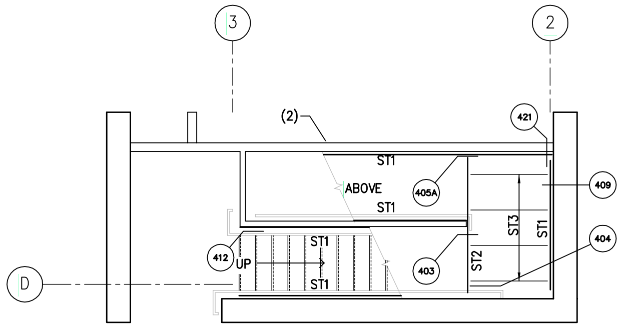
3
2
D
(2)
421
ST1
ABOVE
405A
409
ST3
ST1
412
UP
ST1
403
ST2
404
ST1
(1)

1 STAIR #1 PLAN – BASEMENT LEVEL

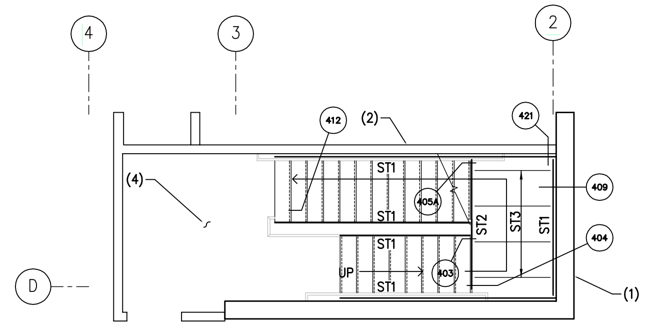
4
3
2
D
412
(2)
421
(4)
ST1
405A
409
ST2
ST3
ST1
ST1
404
UP
403
ST1
(1)

6 STAIR #1 PLAN – LEVELS 5–8 AND 10–19

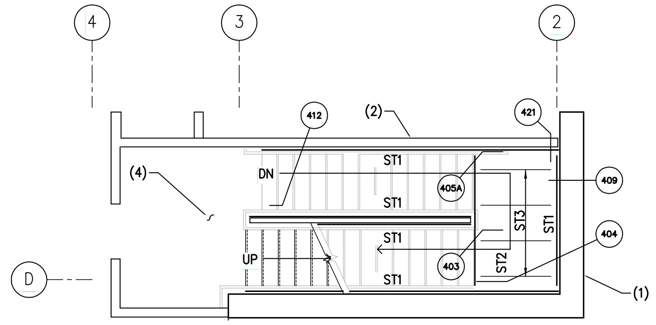
4
3
2
D
412
(2)
421
(4)
DN
ST1
405A
409
ST1
ST3
ST1
ST1
404
UP
403
ST2
ST1
(1)

2 STAIR #1 PLAN – GROUND LEVEL

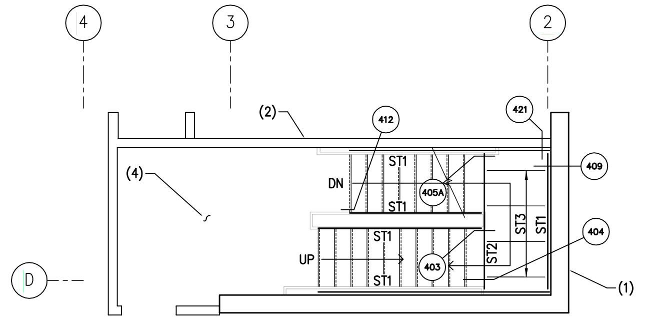
4
3
2
D
(2)
412
421
(4)
ST1
409
DN
405A
ST1
ST3
ST1
ST1
404
UP
403
ST2
ST1
(1)

7 STAIR #1 PLAN – NINTH LEVEL

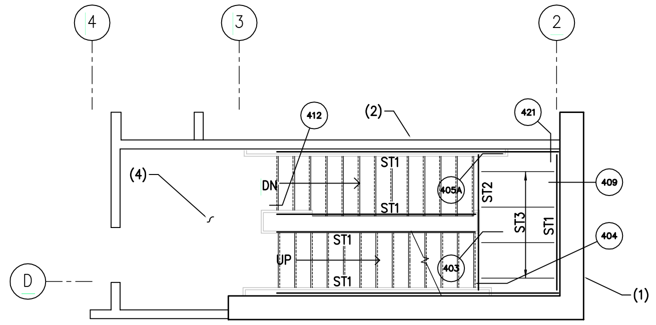
4
3
2
D
412
(2)
421
(4)
ST1
405A
ST2
409
DN
ST1
ST3
ST1
ST1
404
UP
403
ST1
(1)

3 STAIR #1 PLAN – SECOND LEVEL

NOTES:

1. CONCRETE WALL.
2. STEEL STUD WALL.
3. HSS 4x4x1/4" STEEL COLUMN.
4. POST–TENSIONED CONCRETE FLOOR SLAB.
5. INTERMEDIATE LANDING LOCATED BETWEEN FLOOR SLABS.
6. LINE OF SUSPENDED STEEL COLUMN.
7. SEE DETAIL 401 FOR STAIR BEAM SIZES.

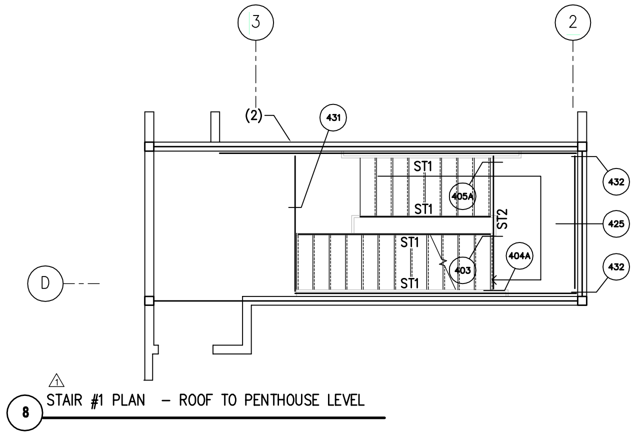
3
2
D
(2)
431
ST1
405A
ST2
432
ST1
425
ST1
403
404A
ST1
432

3 8 STAIR #1 PLAN – ROOF TO PENTHOUSE LEVEL

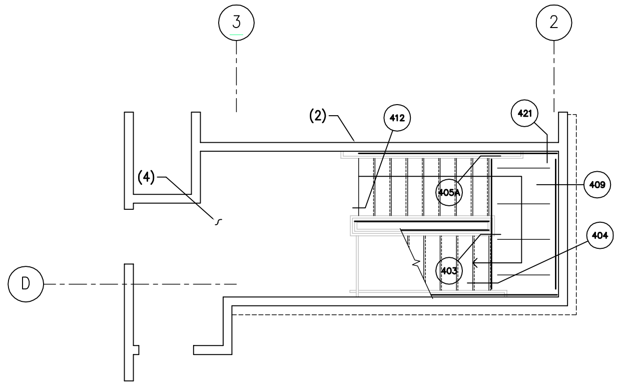
3
2
D
(2)
412
421
(4)
405A
409
404
403

8 STAIR #1 PLAN – 19th LEVEL TO ROOF

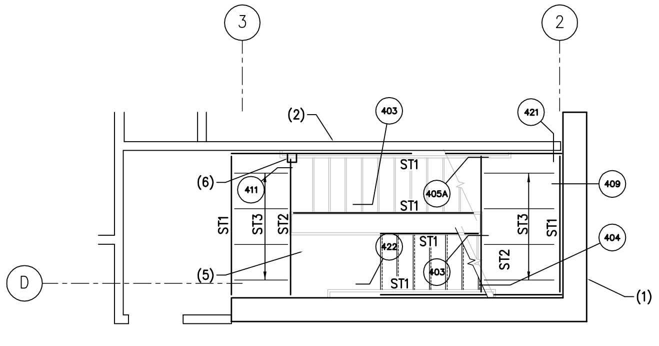
3
2
D
(2)
403
421
(6)
411
ST1
405A
409
ST1
ST3
ST1
ST1
422
403
ST2
ST3
ST1
404
(5)
ST1
(1)

4 STAIR #1 PLAN – THIRD LEVEL AND THIRD INTERMEDIATE LEVEL

AWBREY
COOK
MCGILL
architects
1045 14th Street, Suite 100
San Diego, CA 92101-5701
Phone: 619 . 398 . 3480

ARCHITECTS:

THOMAS B. AWBREY	C 17578
CLIFFORD W. COOK	C 19705
SCOT W. McGILL	C 21059

42194
BRADY K.
NOTBOHM
8/22/14
EXPIRES 03-31-17

Copyright © 2014
AWBREY COOK MCGILL ARCHITECTS
All ideas, designs, and arrangements indicated on these drawings are the property of AWBREY COOK MCGILL ARCHITECTS and are intended to be used in connection with this specific project only and shall not otherwise be used for any purpose whatsoever without the written consent of the architects. There shall be no changes or deviations from these drawings or the accompanying specifications without the written consent of the architects.

CONSULTANTS:

CARUSO
TURLEY
SCOTT
INC.
consulting
structural
engineers
1215 W. Rio Salado Pkwy
Suite 200
Tempe, Arizona 85281
(480) 774-1700
(480) 774-1701 FAX
www.ctsaz.com

ENGINEER: TRM/BKN – JOB NUMBER: 13–112

REVISIONS:

1	PLAN CHECK CORRECTIONS	2/28/14
3	MEP MAKEUP AIR & GUESTROOM FLR HGTS	8/22/14

THESE DRAWINGS/CALCULATIONS ARE CONSIDERED PRELIMINARY –NOT FOR CONSTRUCTION OR RECORDING UNLESS THE STRUCTURAL ENGINEER OF RECORD'S SEAL IS AFFIXED WITH WRITTEN SIGNATURE.

PROJECT:

MARRIOTT RESIDENCE INN
- COURTYARD @ LUHRS
A Development of - LUHRS CM, LLC
Phoenix, Arizona

DRAWN:	SMV
CHECKED:	BKN/TRM
DATE:	12/16/13
PROJECT NO.:	12–1601

SHEET TITLE:
STAIR #1
PLANS

SHEET NO.: 3
S5.1.0

AWBREY . COOK . McGILL . ARCHITECTS 1045 14th Street Suite 100, San Diego, California 92101.5701 Telephone 619.398.3480 Fax. 619.398.3488

FINAL FOR CONSTRUCTION - 05/18/15

C:\Users\dft18\Documents\JOBS\131112\13-112S510.dwg, 8/20/2014 3:29:59 PM

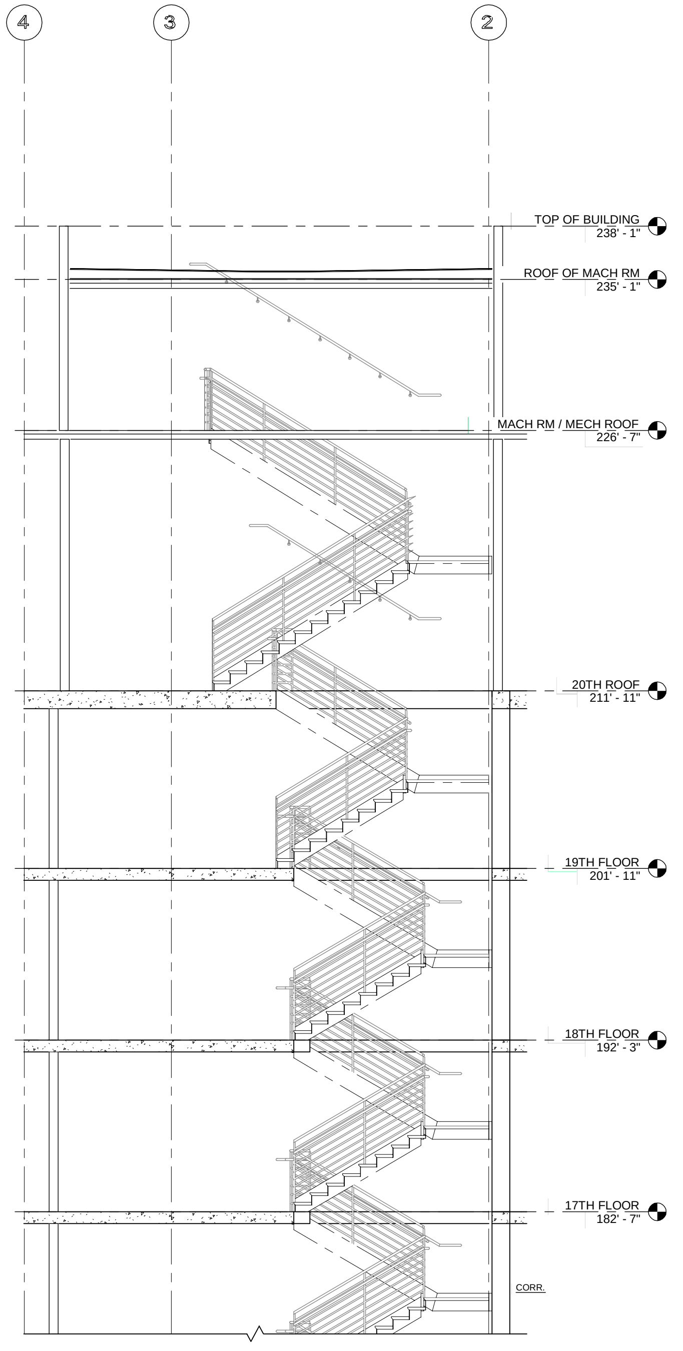
4
3
2
TOP OF BUILDING
238' - 1"
ROOF OF MACH RM
235' - 1"
MACH RM / MECH ROOF
226' - 7"
20TH ROOF
211' - 11"
19TH FLOOR
201' - 11"
18TH FLOOR
192' - 3"
17TH FLOOR
182' - 7"
CORR.

3 STAIR #1 – SECTION

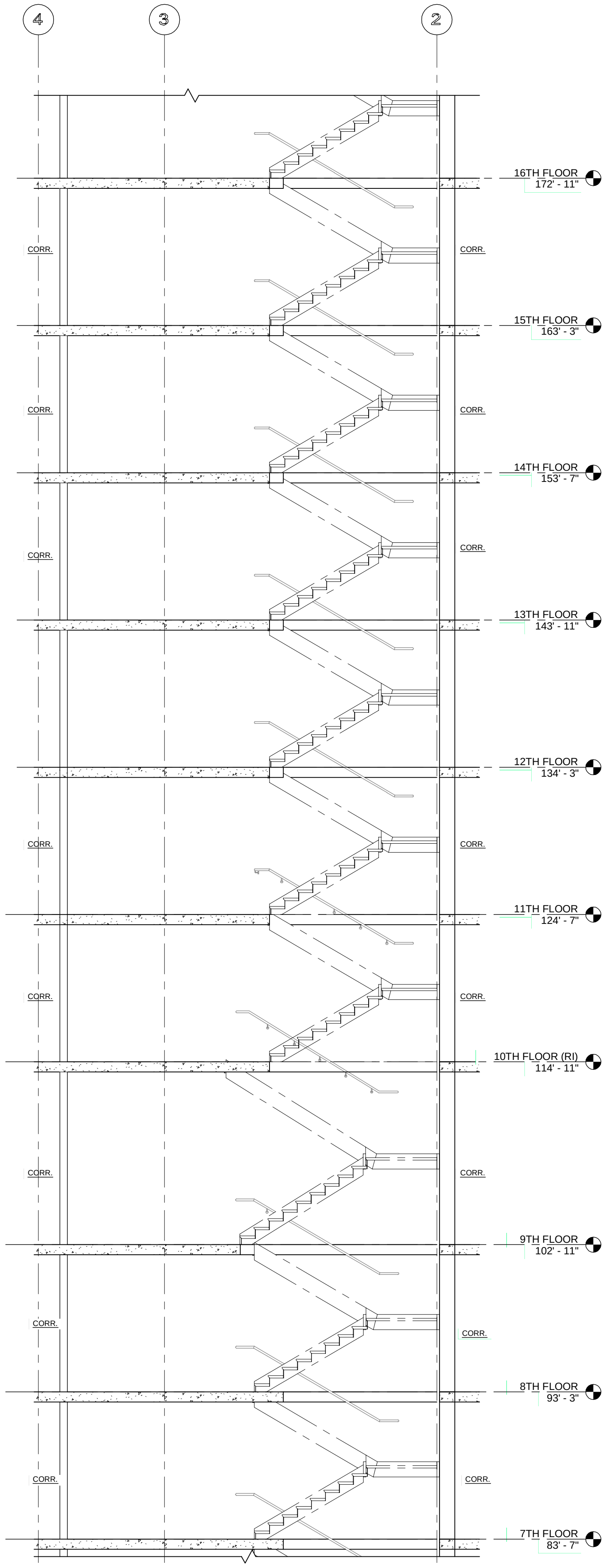
4
3
2
16TH FLOOR
172' - 11"
15TH FLOOR
163' - 3"
14TH FLOOR
153' - 7"
13TH FLOOR
143' - 11"
12TH FLOOR
134' - 3"
11TH FLOOR
124' - 7"
10TH FLOOR (RI)
114' - 11"
9TH FLOOR
102' - 11"
8TH FLOOR
93' - 3"
7TH FLOOR
83' - 7"
CORR.

2 STAIR #1 – SECTION

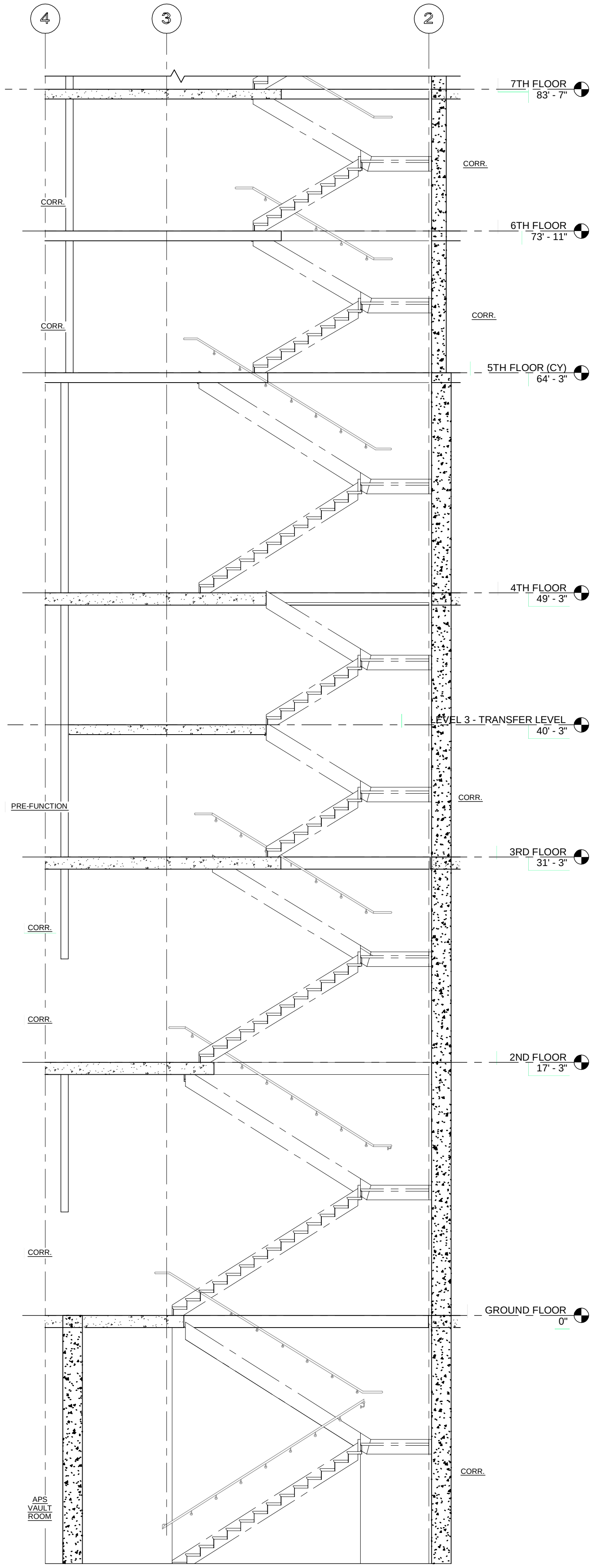
4
3
2
7TH FLOOR
83' - 7"
6TH FLOOR
73' - 11"
5TH FLOOR (CY)
64' - 3"
4TH FLOOR
49' - 3"
LEVEL 3 - TRANSFER LEVEL
40' - 3"
3RD FLOOR
31' - 3"
2ND FLOOR
17' - 3"
GROUND FLOOR
0"
CORR.
PRE-FUNCTION
APS
VAULT
ROOM

1 STAIR #1 – SECTION

**AWBREY
COOK
MCGILL**
architects
1045 14th Street, Suite 100
San Diego, CA 92101-5701
Phone: 619 . 398 . 3480

ARCHITECTS:

THOMAS B. AWBREY	C 17578
CLIFFORD W. COOK	C 19705
SCOT W. McGILL	C 21059

Registered Professional Engineer (Structural)
CERTIFICATE NO.
42194
BRADY K.
NOTBOHM
Date Signed 8/22/14
ARIZONA, U.S.A.
EXPIRES 03-31-17

Copyright © 2014
AWBREY COOK MCGILL ARCHITECTS
All ideas, designs, and arrangements indicated on these drawings are the property of AWBREY COOK MCGILL ARCHITECTS and are intended to be used in connection with this specific project only and shall not otherwise be used for any purpose whatsoever without the written consent of the architects. There shall be no changes or deviations from these drawings or the accompanying specifications without the written consent of the architects.

CONSULTANTS:

CARUSO
TURLEY
SCOTT
INC.
consulting
structural
engineers
1215 W. Rio Salado Pkwy
Suite 200
Tempe, Arizona 85281
(480) 774-1700
(480) 774-1701 FAX
www.ctsaz.com

ENGINEER: TRM/BKN – JOB NUMBER: 13-112

REVISIONS:

1	PLAN CHECK CORRECTIONS	2/28/14
3	MEP MAKEUP AIR & GUESTROOM FLR HGTS	8/22/14

THESE DRAWINGS/CALCULATIONS ARE CONSIDERED PRELIMINARY –NOT FOR CONSTRUCTION OR RECORDING UNLESS THE STRUCTURAL ENGINEER OF RECORD'S SEAL IS AFFIXED WITH WRITTEN SIGNATURE.

PROJECT:

COURTYARD Marriott
Residence Inn Marriott

MARRIOTT RESIDENCE INN
- COURTYARD @ LUHRS
A Development of - LUHRS CM, LLC
Phoenix, Arizona

DRAWN:	SMV
CHECKED:	BKN/TRM
DATE:	12/16/13
PROJECT NO.:	12-1601

SHEET TITLE:

STAIR #1
SECTIONS

SHEET NO.: 3

S5.1.1

AWBREY . COOK . McGILL . ARCHITECTS 1045 14th Street Suite 100, San Diego, California 92101.5701 Telephone 619.398.3480 Fax. 619.398.3488

FINAL FOR CONSTRUCTION - 05/18/15

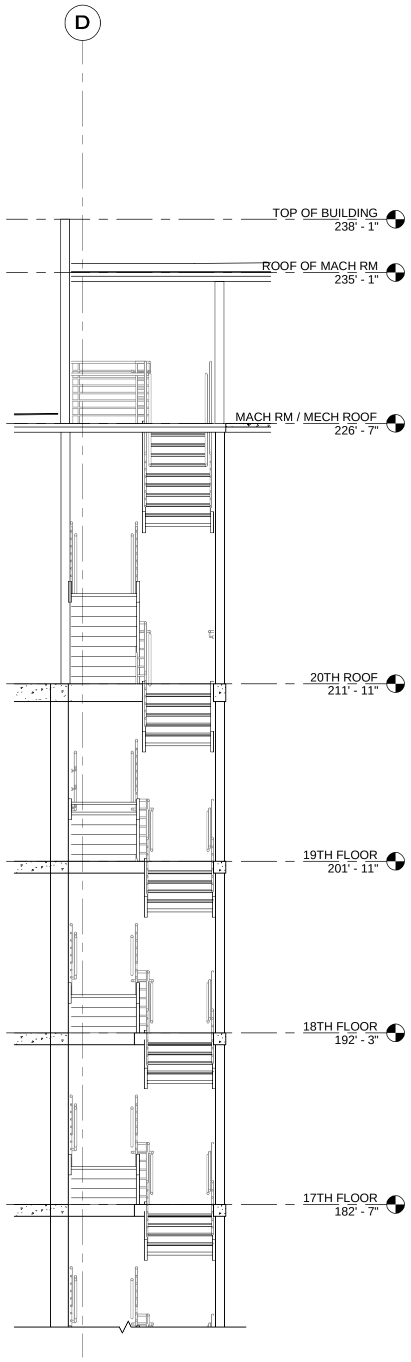
D
TOP OF BUILDING
238' - 1"
ROOF OF MACH RM
235' - 1"
MACH RM / MECH ROOF
226' - 7"
20TH ROOF
211' - 11"
19TH FLOOR
201' - 11"
18TH FLOOR
192' - 3"
17TH FLOOR
182' - 7"

③ STAIR #1 – SECTION

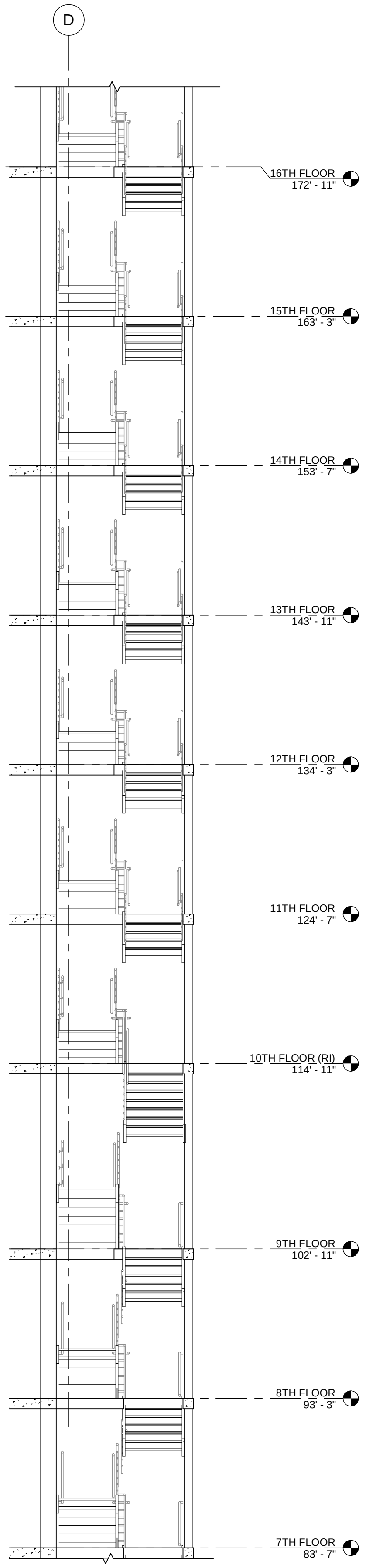
D
16TH FLOOR
172' - 11"
15TH FLOOR
163' - 3"
14TH FLOOR
153' - 7"
13TH FLOOR
143' - 11"
12TH FLOOR
134' - 3"
11TH FLOOR
124' - 7"
10TH FLOOR (RI)
114' - 11"
9TH FLOOR
102' - 11"
8TH FLOOR
93' - 3"
7TH FLOOR
83' - 7"

② STAIR #1 – SECTION

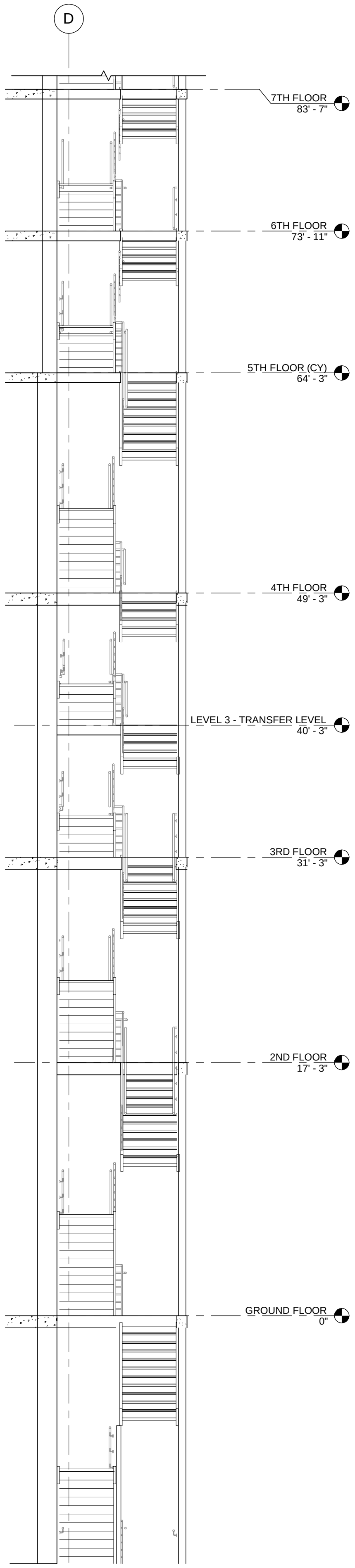
D
7TH FLOOR
83' - 7"
6TH FLOOR
73' - 11"
5TH FLOOR (CY)
64' - 3"
4TH FLOOR
49' - 3"
LEVEL 3 - TRANSFER LEVEL
40' - 3"
3RD FLOOR
31' - 3"
2ND FLOOR
17' - 3"
GROUND FLOOR
0"

① STAIR #1 – SECTION

AWBREY
COOK
MCGILL
architects
1045 14th Street, Suite 100
San Diego, CA 92101-5701
Phone: 619 . 398 . 3480

ARCHITECTS:

THOMAS B. AWBREY	C 17578
CLIFFORD W. COOK	C 19705
SCOT W. McGILL	C 21059

Registered Professional Engineer (Structural)
CERTIFICATE NO.
42194
BRADY K.
NOTBOHM
8/22/14
Date Signed
ARIZONA, U.S.A.
EXPIRES 03-31-17

Copyright © 2014
AWBREY COOK MCGILL ARCHITECTS
All ideas, designs, and arrangements indicated on these drawings are the property of AWBREY COOK MCGILL ARCHITECTS and are intended to be used in connection with this specific project only and shall not otherwise be used for any purpose whatsoever without the written consent of the architects. There shall be no changes or deviations from these drawings or the accompanying specifications without the written consent of the architects.

CONSULTANTS:

CARUSO
TURLEY
SCOTT
INC.
consulting
structural
engineers
1215 W. Rio Salado Pkwy
Suite 200
Tempe, Arizona 85281
(480) 774-1700
(480) 774-1701 FAX
www.ctsaz.com

ENGINEER: TRM/BKN – JOB NUMBER: 13-112

REVISIONS:

3	MEP MAKEUP AIR & GUESTROOM FLR HGTS	8/22/14

THESE DRAWINGS/CALCULATIONS ARE CONSIDERED PRELIMINARY –NOT FOR CONSTRUCTION OR RECORDING UNLESS THE STRUCTURAL ENGINEER OF RECORD'S SEAL IS AFFIXED WITH WRITTEN SIGNATURE.

PROJECT:

Residence Inn Marriott
COURTYARD Marriott

MARRIOTT RESIDENCE INN
- COURTYARD @ LUHRS
A Development of - LUHRS CM, LLC
Phoenix, Arizona

DRAWN:	SMV
CHECKED:	BKN/TRM
DATE:	12/16/13
PROJECT NO.:	12–1601

SHEET TITLE:
STAIR #1
SECTIONS

SHEET NO.: 3
S5.1.2

AWBREY . COOK . McGILL . ARCHITECTS 1045 14th Street Suite 100, San Diego, California 92101.5701 Telephone 619.398.3480 Fax. 619.398.3488

FINAL FOR CONSTRUCTION - 05/18/15

C:\Users\dft18\Documents\JOBS\13112\13-112S512.dwg, 8/20/2014 3:31:08 PM

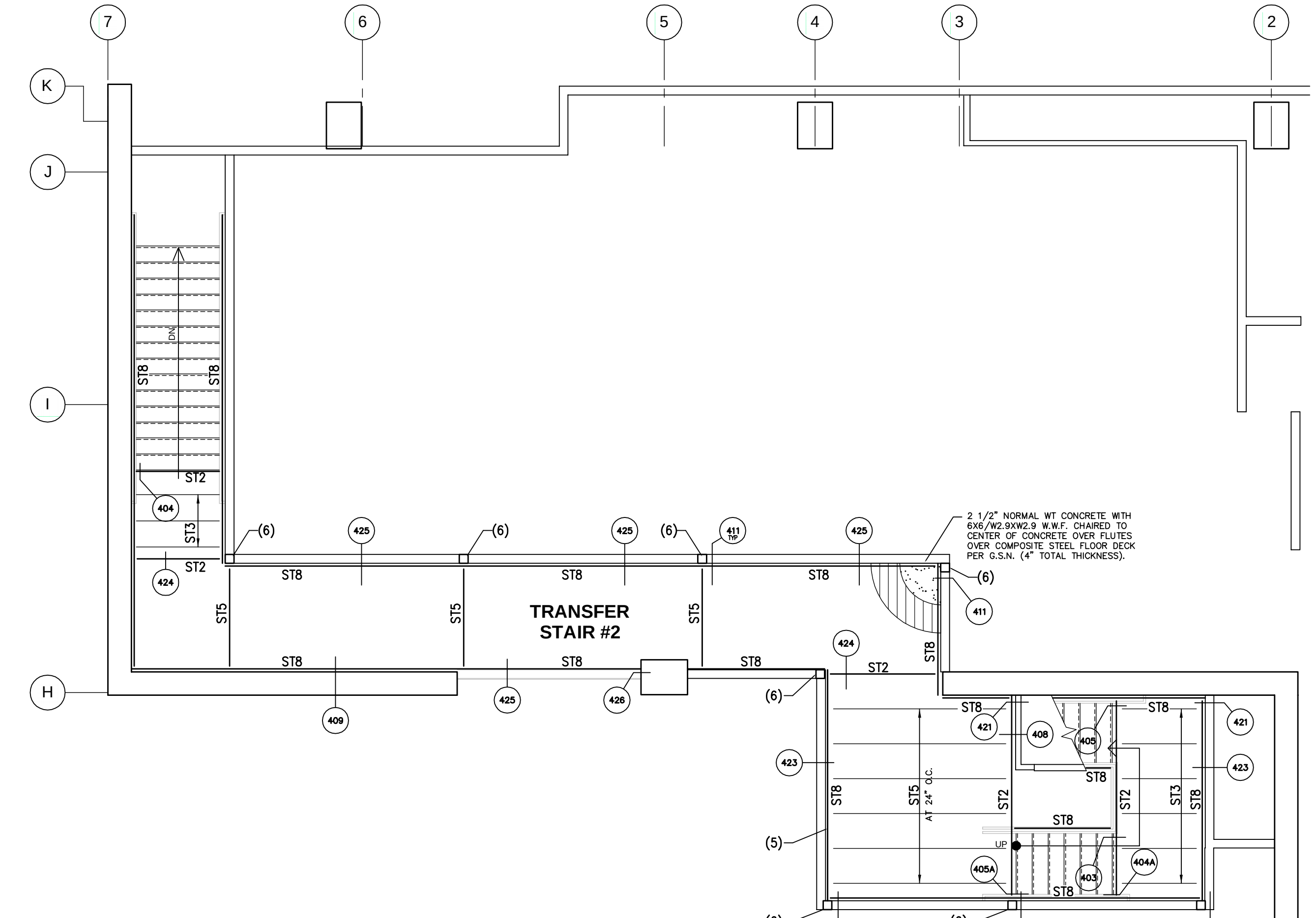
7
6
5
4
3
2
K
J
I
H
TRANSFER
STAIR #2
ST8
ST5
ST2
ST3
DN
(6)
(5)
404
424
425
411 TYP
409
426
421
423
408
405
405A
403
404A
418
411
UP
AT 24" o.c.

2 1/2" NORMAL WT CONCRETE WITH 6X6/W2.9XW2.9 W.W.F. CHAIRED TO CENTER OF CONCRETE OVER FLUTES OVER COMPOSITE STEEL FLOOR DECK PER G.S.N. (4" TOTAL THICKNESS).

5 STAIR #2 PLAN – TRANSFER LEVEL

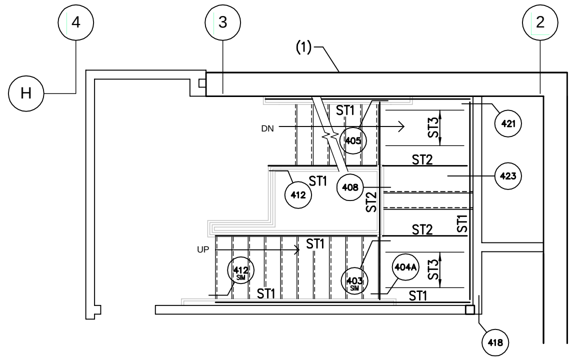
4
3
2
H
(1)
ST1
ST2
ST3
DN
UP
405
412
408
403
404A
421
423
418

1 STAIR #2 PLAN – SECOND LEVEL

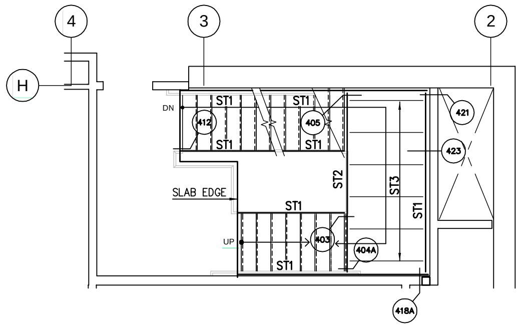
4
3
2
H
ST1
ST2
ST3
DN
UP
SLAB EDGE
412
405
421
423
403
404A
418A

2 STAIR #2 PLAN – 3rd FLOOR TO INTERMEDIATE LEVEL

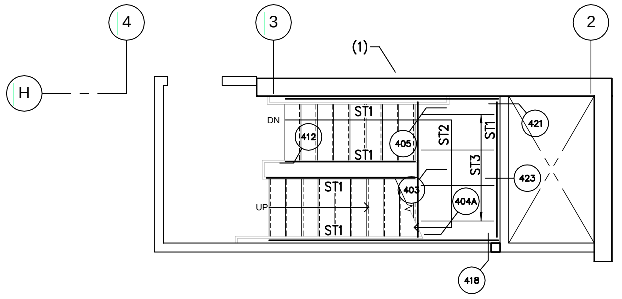
4
3
2
H
(1)
ST1
ST2
ST3
DN
UP
412
405
403
404A
421
423
418

7 STAIR #2 PLAN – NINTH LEVEL

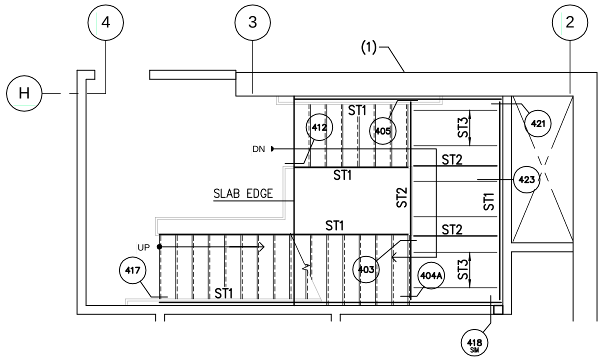
4
3
2
H
(1)
ST1
ST2
ST3
DN
UP
SLAB EDGE
412
405
421
423
403
404A
417
418 SIM

4 STAIR #2 PLAN – FOURTH LEVEL TO INTERMEDIATE LANDING

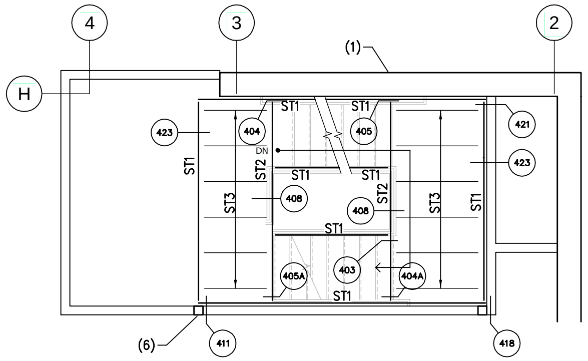
4
3
2
H
(1)
ST1
ST2
ST3
423
404
405
408
421
405A
403
404A
(6)
411
418

3 STAIR #2 PLAN – THIRD INTERMEDIATE LEVELS

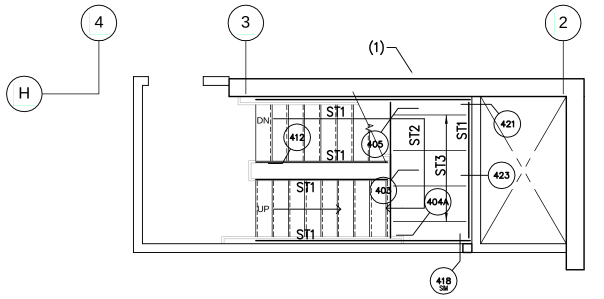
4
3
2
H
(1)
ST1
ST2
ST3
DN
UP
412
405
403
404A
421
423
418 SIM

8 STAIR #2 PLAN – NINETEENTH LEVEL

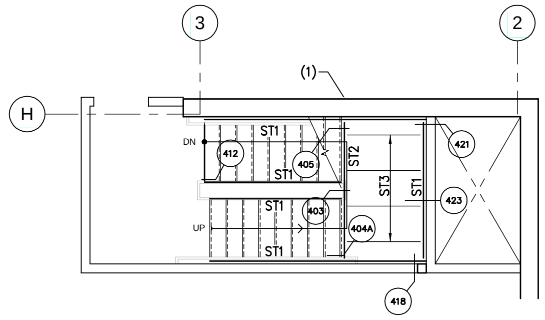
3
2
H
(1)
ST1
ST2
ST3
DN
UP
412
405
403
404A
421
423
418

6 STAIR #2 PLAN – LEVELS 5-8 AND 10-18

△2

NOTES:

1. CONCRETE WALL.
2. STEEL STUD WALL.
3. HSS 4x4x1/4" STEEL COLUMN.
4. POST-TENSIONED CONCRETE FLOOR SLAB.
5. INTERMEDIATE LANDING LOCATED BETWEEN FLOOR SLABS.
6. LINE OF SUSPENDED STEEL COLUMN.
7. SEE DETAIL 401 FOR STAIR BEAM SIZES.

AWBREY COOK MCGILL
architects
1045 14th Street, Suite 100
San Diego, CA 92101-5701
Phone: 619 . 398 . 3480

ARCHITECTS:

THOMAS B. AWBREY	C 17578
CLIFFORD W. COOK	C 19705
SCOT W. McGILL	C 21059

42194
BRADY K.
NOTBOHM
8/22/14
EXPIRES 03-31-17

Copyright © 2014
AWBREY COOK MCGILL ARCHITECTS
All ideas, designs, and arrangements indicated on these drawings are the property of AWBREY COOK MCGILL ARCHITECTS and are intended to be used in connection with this specific project only and shall not otherwise be used for any purpose whatsoever without the written consent of the architects. There shall be no changes or deviations from these drawings or the accompanying specifications without the written consent of the architects.

CONSULTANTS:

CARUSO
TURLEY
SCOTT
INC.
consulting
structural
engineers
1215 W. Rio Salado Pkwy
Suite 200
Tempe, Arizona 85281
(480) 774-1700
(480) 774-1701 FAX
www.ctsaz.com

ENGINEER: TRM/BKN – JOB NUMBER: 13-112

REVISIONS:

△1	PLAN CHECK CORRECTIONS	2/28/14
△2	INTERNAL COORD. REVISIONS	5/27/14
△3	MEP MAKEUP AIR & GUESTROOM FLR HGTS	8/22/14

THESE DRAWINGS/CALCULATIONS ARE CONSIDERED PRELIMINARY –NOT FOR CONSTRUCTION OR RECORDING UNLESS THE STRUCTURAL ENGINEER OF RECORD'S SEAL IS AFFIXED WITH WRITTEN SIGNATURE.

PROJECT:

MARRIOTT RESIDENCE INN
- COURTYARD @ LUHRS
A Development of - LUHRS CM, LLC
Phoenix, Arizona

DRAWN:	SMV
CHECKED:	BKN/TRM
DATE:	12/16/13
PROJECT NO.:	12-1601

SHEET TITLE:
STAIR #2
PLANS

SHEET NO.: △3
S5.2.0

AWBREY . COOK . McGILL . ARCHITECTS 1045 14th Street Suite 100, San Diego, California 92101.5701 Telephone 619.398.3480 Fax. 619.398.3488

FINAL FOR CONSTRUCTION - 05/18/15

C:\Users\dft18\Documents\JOBS\131112\13-112S520.dwg, 8/20/2014 3:32:02 PM

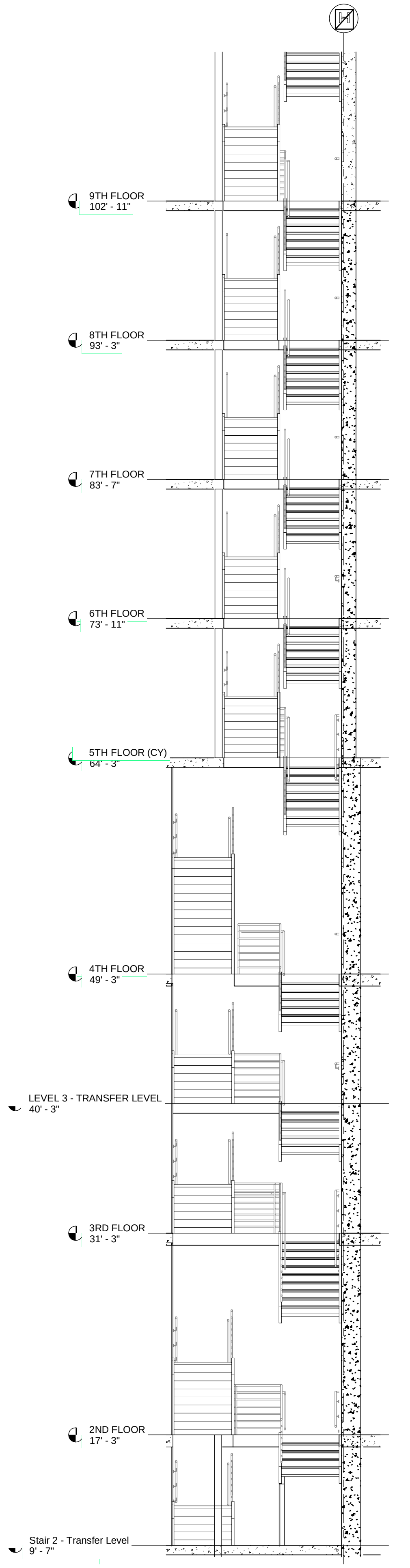
9TH FLOOR
102' - 11"
8TH FLOOR
93' - 3"
7TH FLOOR
83' - 7"
6TH FLOOR
73' - 11"
5TH FLOOR (CY)
64' - 3"
4TH FLOOR
49' - 3"
LEVEL 3 - TRANSFER LEVEL
40' - 3"
3RD FLOOR
31' - 3"
2ND FLOOR
17' - 3"
Stair 2 - Transfer Level
9' - 7"

3 STAIR #2 – SECTION

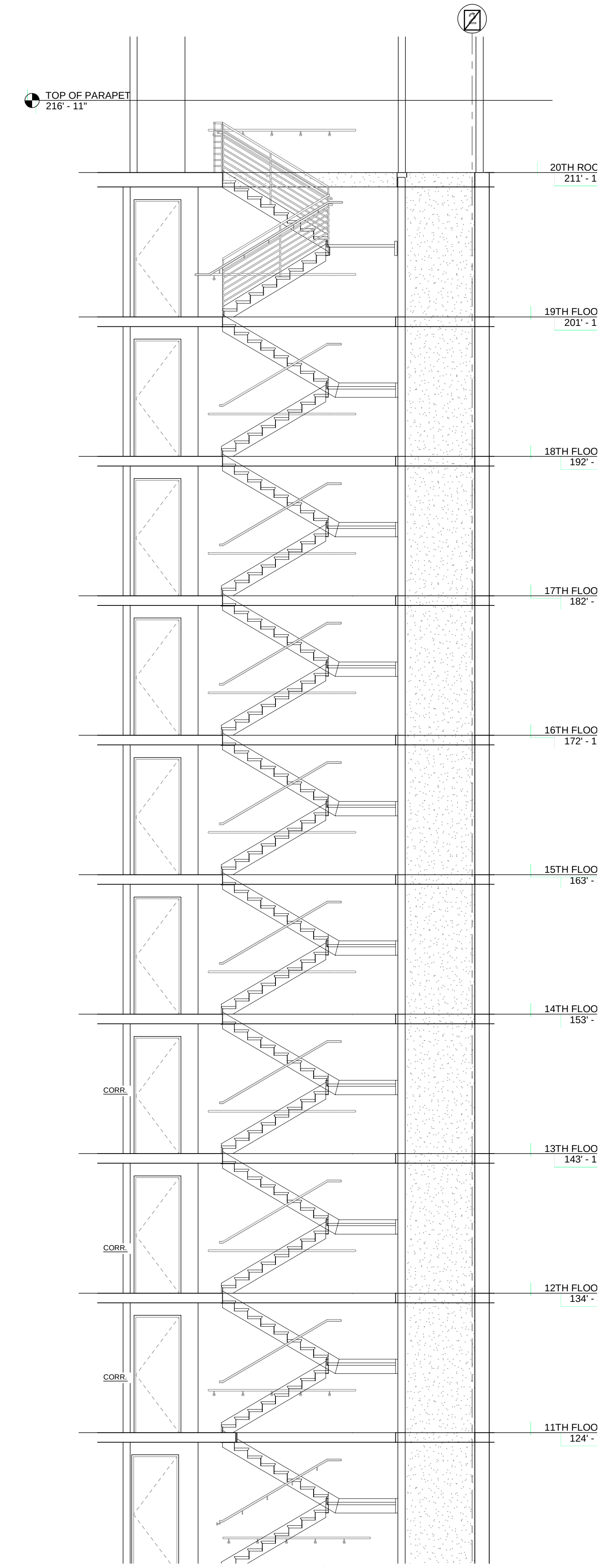
TOP OF PARAPET
216' - 11"
20TH ROC
211' - 1
19TH FLOO
201' - 1
18TH FLOO
192' -
17TH FLOO
182' -
16TH FLOO
172' - 1
15TH FLOO
163' -
14TH FLOO
153' -
CORR.
13TH FLOO
143' - 1
CORR.
12TH FLOO
134' -
CORR.
11TH FLOO
124' -

1 STAIR #2 – SECTION con't

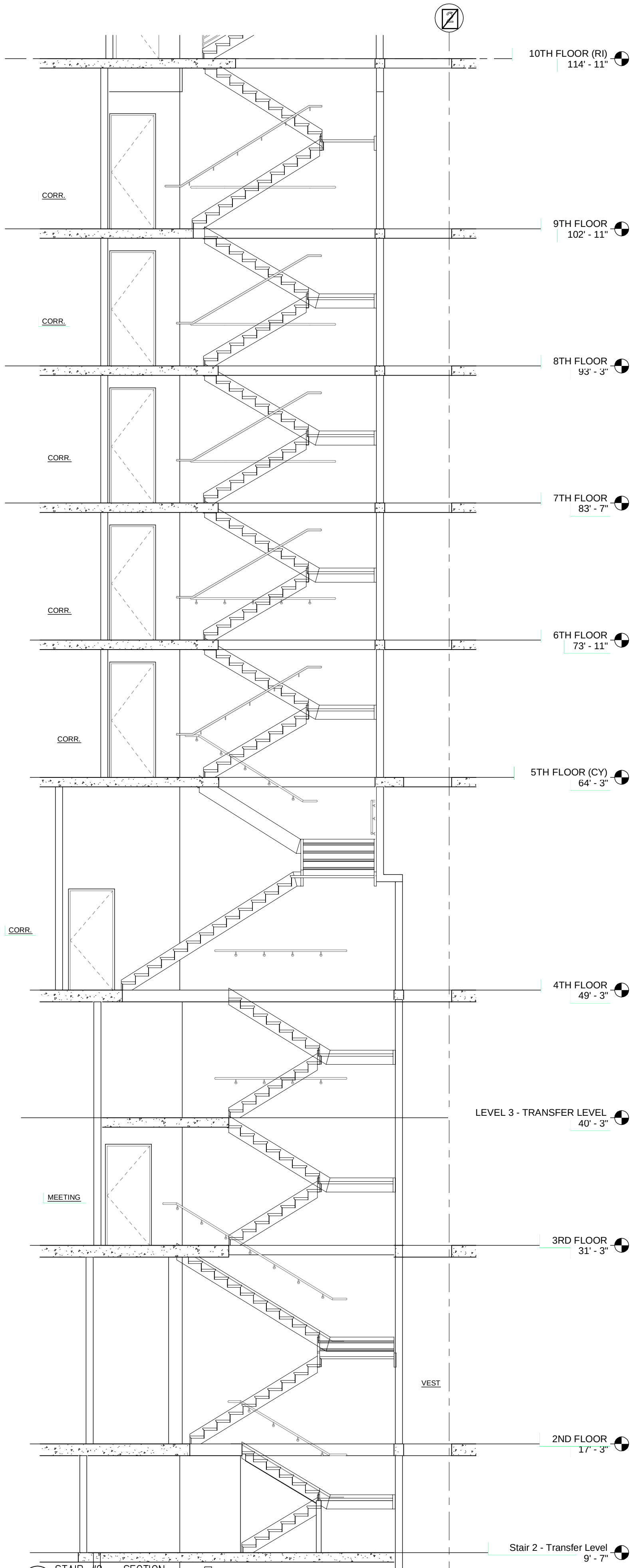
10TH FLOOR (RI)
114' - 11"
CORR.
9TH FLOOR
102' - 11"
CORR.
8TH FLOOR
93' - 3"
CORR.
7TH FLOOR
83' - 7"
CORR.
6TH FLOOR
73' - 11"
CORR.
5TH FLOOR (CY)
64' - 3"
CORR.
4TH FLOOR
49' - 3"
LEVEL 3 - TRANSFER LEVEL
40' - 3"
MEETING
3RD FLOOR
31' - 3"
VEST
2ND FLOOR
17' - 3"
Stair 2 - Transfer Level
9' - 7"

1 STAIR #2 – SECTION

AWBREY
COOK
MCGILL
architects
1045 14th Street, Suite 100
San Diego, CA 92101-5701
Phone: 619 . 398 . 3480

ARCHITECTS:

THOMAS B. AWBREY	C 17578
CLIFFORD W. COOK	C 19705
SCOT W. McGILL	C 21059

Registered Professional Engineer (Structural)
CERTIFICATE NO.
42194
BRADY K.
NOTBOHM
8/22/14
Date Signed
ARIZONA, U.S.A.
EXPIRES 03-31-17

Copyright © 2014
AWBREY COOK MCGILL ARCHITECTS
All ideas, designs, and arrangements indicated on these drawings are the property of AWBREY COOK MCGILL ARCHITECTS and are intended to be used in connection with this specific project only and shall not otherwise be used for any purpose whatsoever without the written consent of the architects. There shall be no changes or deviations from these drawings or the accompanying specifications without the written consent of the architects.

CONSULTANTS:

CARUSO
TURLEY
SCOTT
INC.
consulting
structural
engineers
1215 W. Rio Salado Pkwy
Suite 200
Tempe, Arizona 85281
(480) 774-1700
(480) 774-1701 FAX
www.ctsaz.com

ENGINEER: TRM/BKN – JOB NUMBER: 13-112

REVISIONS:

3	MEP MAKEUP AIR & GUESTROOM FLR HGTS	8/22/14

THESE DRAWINGS/CALCULATIONS ARE CONSIDERED PRELIMINARY –NOT FOR CONSTRUCTION OR RECORDING UNLESS THE STRUCTURAL ENGINEER OF RECORD'S SEAL IS AFFIXED WITH WRITTEN SIGNATURE.

PROJECT:

MARRIOTT RESIDENCE INN
- COURTYARD @ LUHRS
A Development of - LUHRS CM, LLC
Phoenix, Arizona

DRAWN:	SMV
CHECKED:	BKN/TRM
DATE:	12/16/13
PROJECT NO.:	12–1601

SHEET TITLE:
STAIR #2
SECTIONS

SHEET NO.: 3
S5.2.1

AWBREY . COOK . McGILL . ARCHITECTS 1045 14th Street Suite 100, San Diego, California 92101.5701 Telephone 619.398.3480 Fax. 619.398.3488

FINAL FOR CONSTRUCTION - 05/18/15

C:\Users\dft18\Documents\JOBS\13112\13-112S521.dwg, 8/20/2014 3:32:31 PM

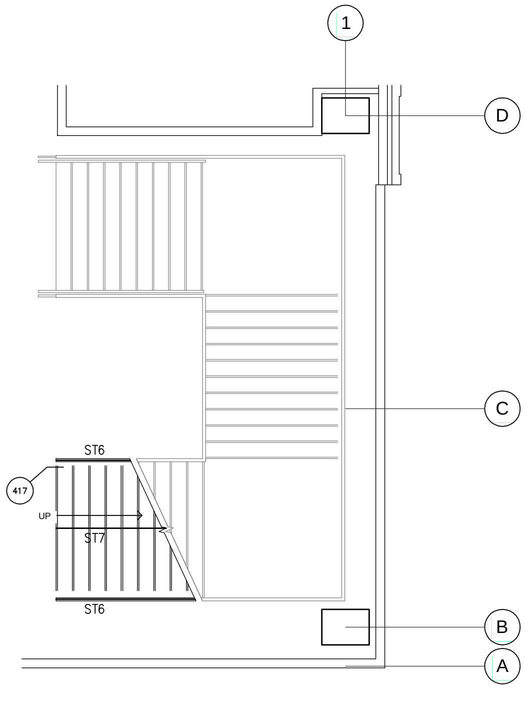
1
D
C
B
A
ST6
ST7
ST6
417
UP

1 STAIR #5 PLAN – THIRD LEVEL

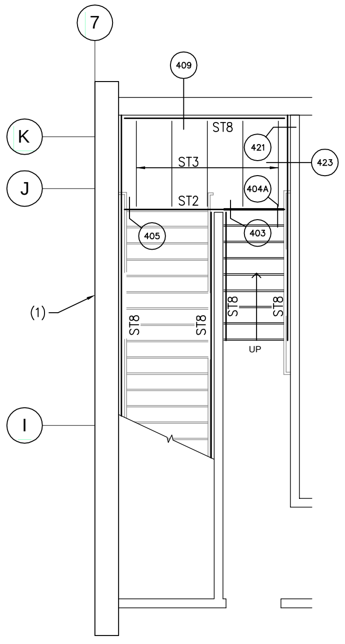
7
K
J
I
(1)
409
ST8
ST3
ST2
421
423
404A
403
405
ST8
ST8
ST8
ST8
UP

1 STAIR #4 PLAN – BASEMENT LEVEL

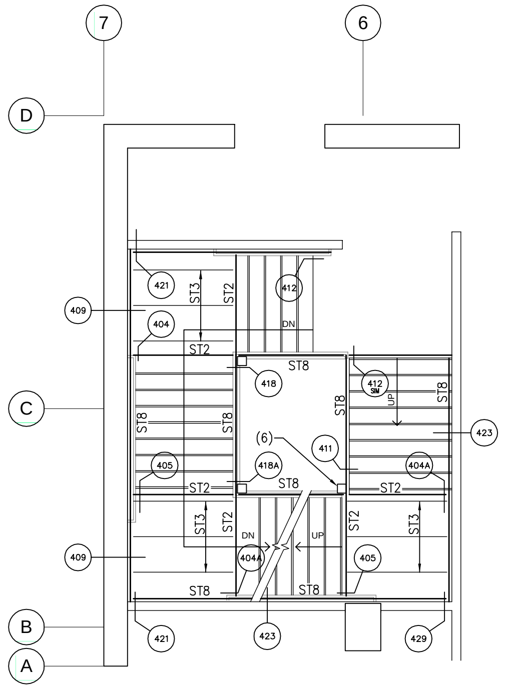
7
6
D
C
B
A
409
421
404
ST3
ST2
412
DN
ST2
ST8
418
412
UP
ST8
ST8
ST8
ST8
423
(6)
411
405
418A
404A
ST2
ST8
ST2
409
ST3
ST2
DN
404A
UP
ST2
ST3
405
ST8
ST8
421
423
429

1 STAIR #3 PLAN – THIRD LEVEL

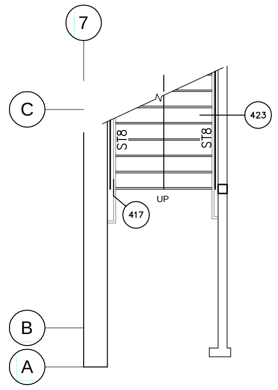
7
C
B
A
423
ST8
ST8
UP
417

1 STAIR #3 PLAN – GROUND LEVEL

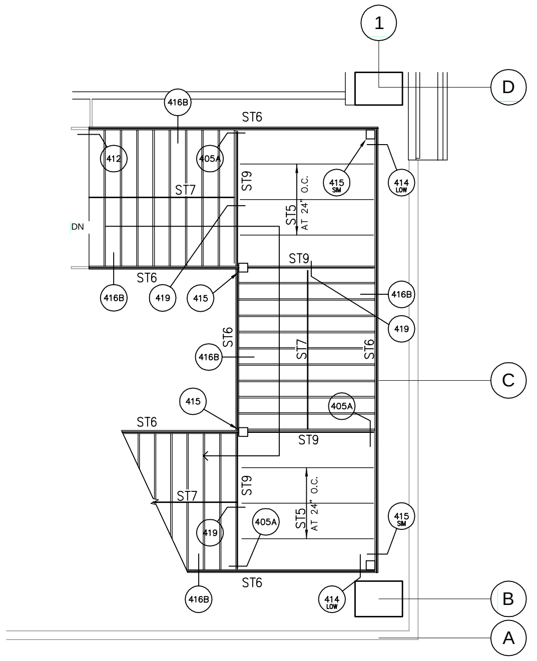
1
D
C
B
A
416B
ST6
412
405A
ST7
415 SIM
414 LOW
ST9
ST5 AT 24" O.C.
DN
ST6
416B
419
415
ST9
416B
419
416B
ST6
ST7
ST6
415
405A
ST6
ST9
ST7
ST9
ST5 AT 24" O.C.
419
405A
415 SIM
ST6
416B
414 LOW

1 STAIR #5 PLAN – FOURTH LEVEL

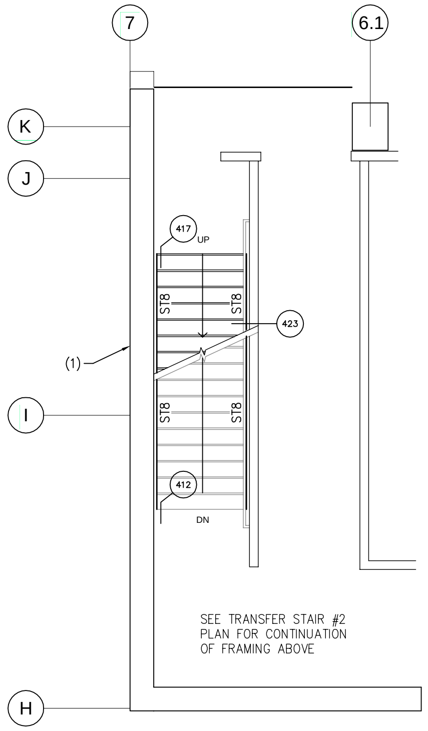
7
6.1
K
J
I
H
(1)
417
UP
ST8
ST8
423
ST8
ST8
412
DN
SEE TRANSFER STAIR #2 PLAN FOR CONTINUATION OF FRAMING ABOVE

1 STAIR #4 PLAN – GROUND LEVEL

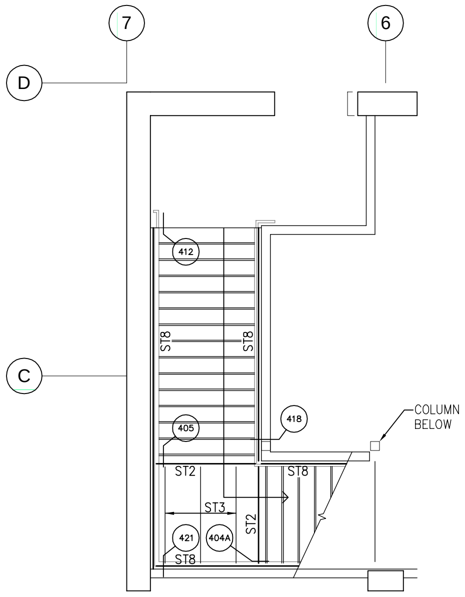
7
6
D
C
412
ST8
ST8
405
418
COLUMN BELOW
ST2
ST8
ST3
421
404A
ST2
ST8

1 STAIR #3 PLAN – FOURTH LEVEL

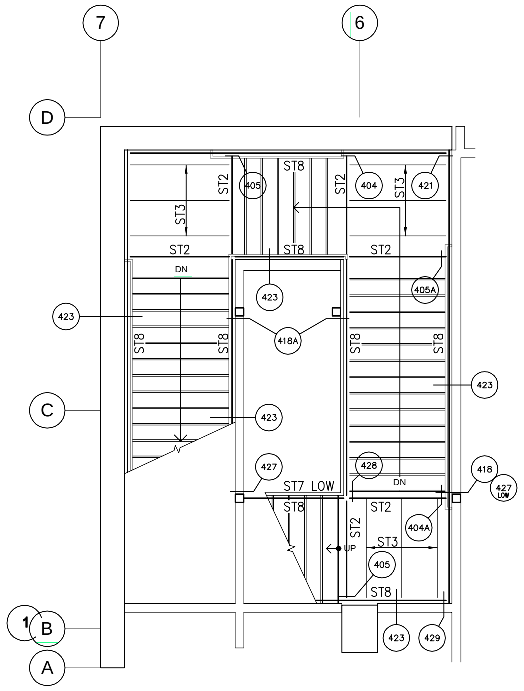
7
6
D
C
B
A
1
ST8
ST3
ST2
405
ST2
404
ST3
421
ST2
ST8
ST2
DN
405A
423
423
ST8
ST8
418A
ST8
ST8
423
423
427
428
DN
418
427 LOW
ST7 LOW
ST8
ST2
UP
ST2
ST3
404A
405
ST8
423
429

1 STAIR #3 PLAN – SECOND LEVEL

NOTES:

1. CONCRETE WALL.
2. STEEL STUD WALL.
3. HSS 4x4x1/4" STEEL COLUMN.
4. POST–TENSIONED CONCRETE FLOOR SLAB.
5. INTERMEDIATE LANDING LOCATED BETWEEN FLOOR SLABS.
6. LINE OF SUSPENDED STEEL COLUMN.
7. SEE DETAIL 401 FOR STAIR BEAM SIZES.

△2

AWBREY
COOK
MCGILL
architects
1045 14th Street, Suite 100
San Diego, CA 92101-5701
Phone: 619 . 398 . 3480

ARCHITECTS:

THOMAS B. AWBREY	C 17578
CLIFFORD W. COOK	C 19705
SCOT W. McGILL	C 21059

42194
BRADY K. NOTBOHM
8/22/14
EXPIRES 03-31-17

Copyright © 2014
AWBREY COOK MCGILL ARCHITECTS
All ideas, designs, and arrangements indicated on these drawings are the property of AWBREY COOK MCGILL ARCHITECTS and are intended to be used in connection with this specific project only and shall not otherwise be used for any purpose whatsoever without the written consent of the architects. There shall be no changes or deviations from these drawings or the accompanying specifications without the written consent of the architects.

CONSULTANTS:

CARUSO
TURLEY
SCOTT
INC.
consulting
structural
engineers
1215 W. Rio Salado Pkwy
Suite 200
Tempe, Arizona 85281
(480) 774–1700
(480) 774–1701 FAX
www.ctsaz.com

ENGINEER: TRM/BKN – JOB NUMBER: 13–112

REVISIONS:

△1	PLAN CHECK CORRECTIONS	2/28/14
△2	INTERNAL COORD. REVISIONS	5/27/14

THESE DRAWINGS/CALCULATIONS ARE CONSIDERED PRELIMINARY –NOT FOR CONSTRUCTION OR RECORDING UNLESS THE STRUCTURAL ENGINEER OF RECORD'S SEAL IS AFFIXED WITH WRITTEN SIGNATURE.

PROJECT:

MARRIOTT RESIDENCE INN
- COURTYARD @ LUHRS
A Development of - LUHRS CM, LLC
Phoenix, Arizona

DRAWN:	SMV
CHECKED:	BKN / TRM
DATE:	12 / 16 / 13
PROJECT NO.:	12 - 1601

SHEET TITLE:

STAIR #3, #4 & #5
PLANS

SHEET NO.:

S5.3.0

AWBREY . COOK . McGILL . ARCHITECTS 1045 14th Street Suite 100, San Diego, California 92101.5701 Telephone 619.398.3480 Fax. 619.398.3488

FINAL FOR CONSTRUCTION - 05/18/15

C:\Users\dft18\Documents\JOBS\13112\13-112S530.dwg, 8/20/2014 3:33:20 PM

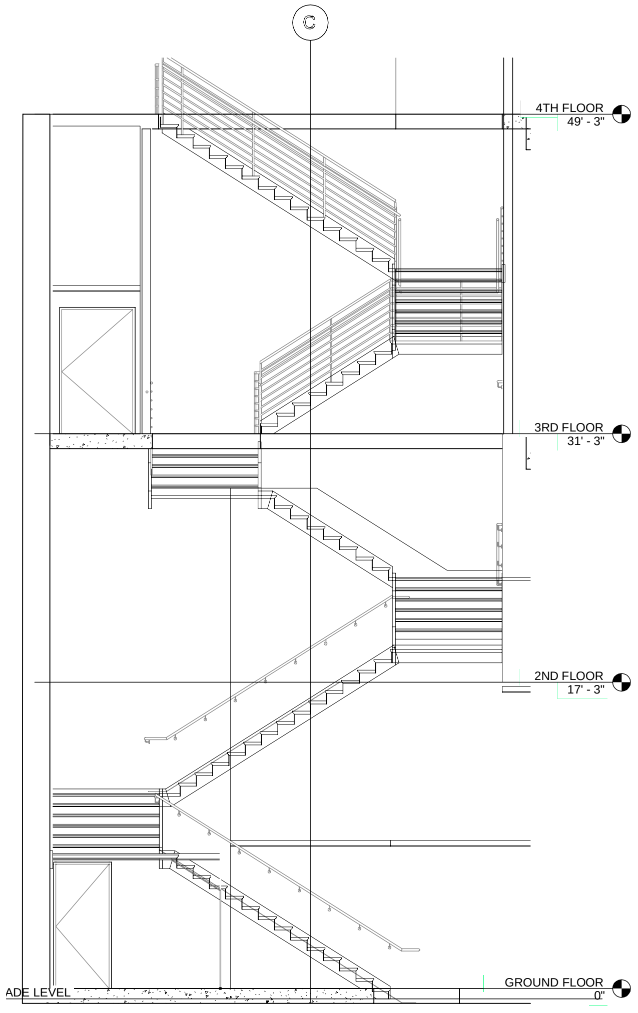

4 STAIR #3 – SECTION

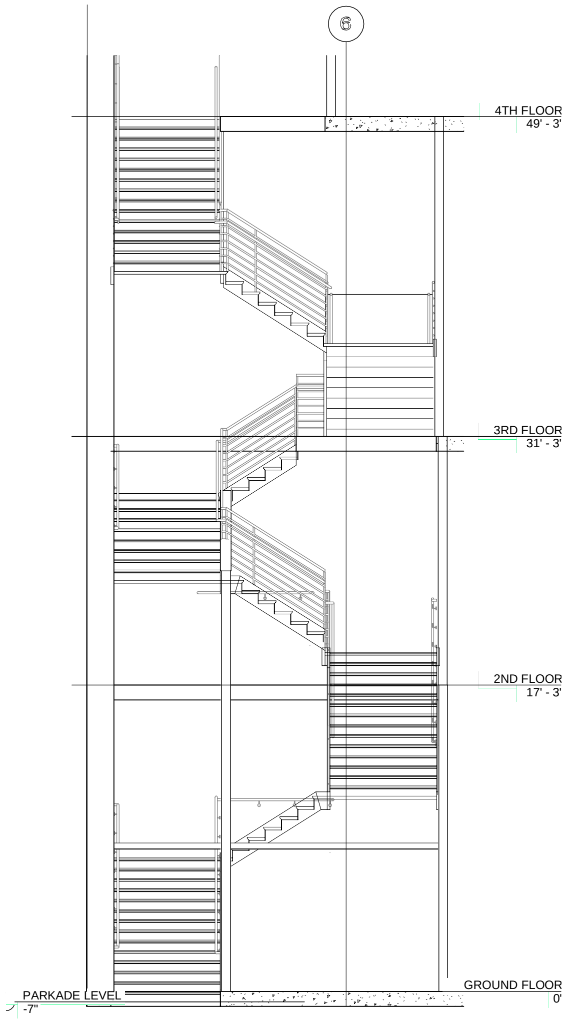

3 STAIR #3 – SECTION

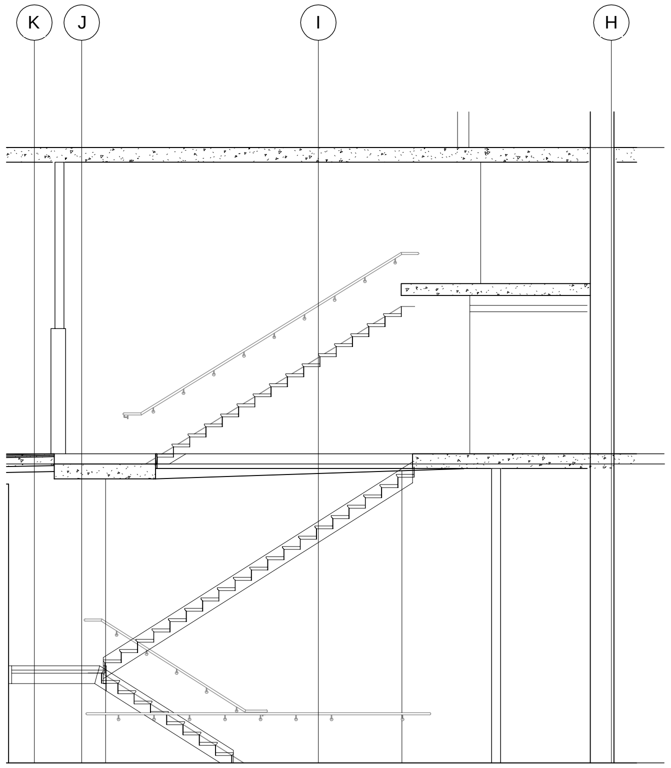

2 STAIR #4 – SECTION

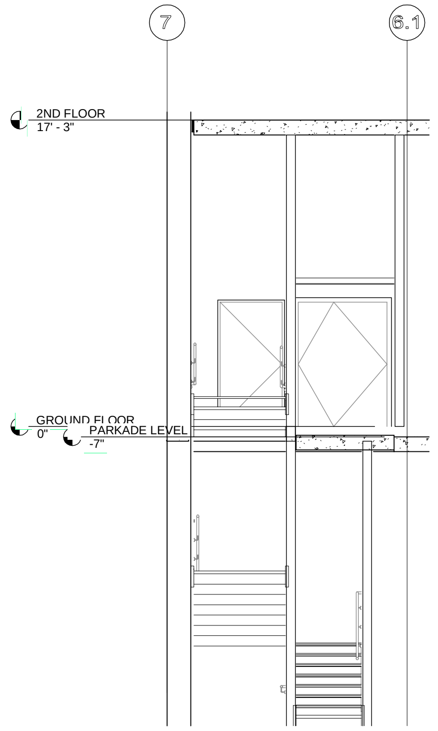

1 STAIR #4 – SECTION

AWBREY
COOK
MCGILL
architects
1045 14th Street, Suite 100
San Diego, CA 92101-5701
Phone: 619 . 398 . 3480

ARCHITECTS:

THOMAS B. AWBREY	C 17578
CLIFFORD W. COOK	C 19705
SCOT W. McGILL	C 21059

42194
BRADY K.
NOTBOHM
8/22/14
EXPIRES 03-31-17

Copyright © 2014
AWBREY COOK MCGILL ARCHITECTS
All ideas, designs, and arrangements indicated on these drawings are the property of AWBREY COOK MCGILL ARCHITECTS and are intended to be used in connection with this specific project only and shall not otherwise be used for any purpose whatsoever without the written consent of the architects. There shall be no changes or deviations from these drawings or the accompanying specifications without the written consent of the architects.

CONSULTANTS:

CARUSO
TURLEY
SCOTT
INC.
consulting
structural
engineers
1215 W. Rio Salado Pkwy
Suite 200
Tempe, Arizona 85281
(480) 774-1700
(480) 774-1701 FAX
www.ctsaz.com

ENGINEER: TRM/BKN – JOB NUMBER: 13–112

REVISIONS:

1	PLAN CHECK CORRECTIONS	2/28/14
3	MEP MAKEUP AIR & GUESTROOM FLR HGTS	8/22/14

THESE DRAWINGS/CALCULATIONS ARE CONSIDERED PRELIMINARY –NOT FOR CONSTRUCTION OR RECORDING UNLESS THE STRUCTURAL ENGINEER OF RECORD'S SEAL IS AFFIXED WITH WRITTEN SIGNATURE.

PROJECT:

COURTYARD Marriott
Residence Inn Marriott

MARRIOTT RESIDENCE INN
- COURTYARD @ LUHRS
A Development of - LUHRS CM, LLC
Phoenix, Arizona

DRAWN:	SMV
CHECKED:	BKN / TRM
DATE:	12 / 16 / 13
PROJECT NO.:	12 - 1601

SHEET TITLE:

STAIRS #3 & 4
SECTIONS

SHEET NO.: 3

S5.3.1

AWBREY . COOK . McGILL . ARCHITECTS 1045 14th Street Suite 100, San Diego, California 92101.5701 Telephone 619.398.3480 Fax. 619.398.3488

FINAL FOR CONSTRUCTION - 05/18/15

C:\Users\dft18\Documents\JOBS\13112\13-112S531.dwg, 8/20/2014 3:33:50 PM

NOTES:

1. 1/2" THICK X 48" WIDE FULLY TEMPERED GLASS PANELS.
2. 1 1/2" DIA. X-STRONG PIPE AT 6'-0" MAX.
3. STEEL STRINGER BEAM.
4. STAIR TREADS AND RISER PER ARCH'L.
5. CONTINUOUS 1/4" STEEL ANGLE LEDGER.
6. 2" DIA. STAINLESS STEEL CONNECTOR BY GLASS RAILING MFR. (2 MIN PER PANEL).
7. 1 1/4" DIA. STD PIPE INTERMEDIATE RAILS AT 4" O.C., MAX.
8. 3/8" STEEL STIFFENER AT EACH VERTICAL PIPE.
9. 3/8" STAINLESS STEEL PLATE. SHAPED PER ARCH'L. DWG.

NOTE:
GLASS RAIL MANUFACTURER SHALL DESIGN FOR 200 PLF OR 800 LB POINT LOAD ALONG TO OF RAIL (LOADS INCLUE A SAFETY FACTOR OF 4) PER CODE SECTION 2407.1.1.

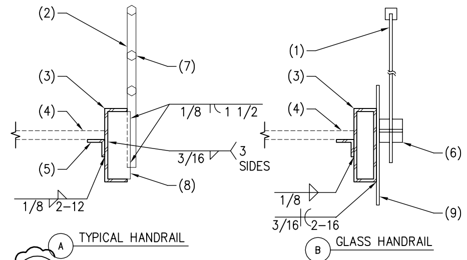

A TYPICAL HANDRAIL

B GLASS HANDRAIL

416 STAIR HANDRAIL SECTION 1 13-112 NO SCALE

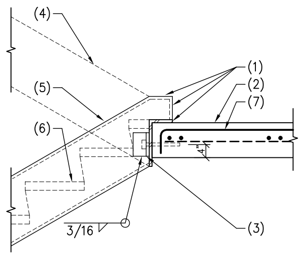

NOTES:

1. 3/16" CLOSURE PLATES AT EXPOSED ENDS AND BETWEEN BEAMS AS OCCURS.
2. CONCRETE SLAB OR BEAM.
3. 1/4"x3"x3"x4" LONG STEEL ANGLE WITH 5/8" DIA SIMPSON TITAN HD CONCRETE ANCHOR WITH 4" MIN EMBEDMENT TYP AT EACH STRINGER.
4. STEEL STAIR BEAM UP AS OCCURS.
5. STEEL STAIR BEAM.
6. FOR TREADS & RISERS SEE ARCH'L DWGS.
7. HOOKED #4 BAR x 4'-0" LONG AT 16" O.C. ALTERNATE TOP AND BOTTOM.

412 STEEL STAIR BEAM AT CONCRETE SLAB 13-112 NO SCALE

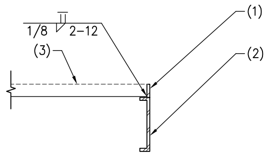

NOTES:

1. 3/16" CONTINUOUS STEEL PLATE.
2. STEEL STAIR BEAM.
3. FOR LANDING, SEE ARCH'L DRAWINGS.

408 STEEL STAIR BEAM AT LANDING 736-16 NO SCALE

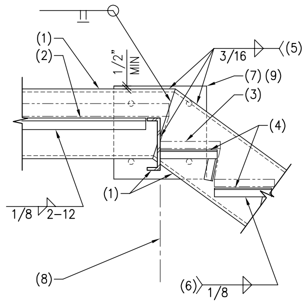

NOTES:

1. STEEL STAIR BEAM.
2. STEEL ANGLE.
3. FOR TREADS, RISERS AND LANDING, SEE ARCHITECTURAL DRAWINGS.
4. ANGLE 1 1/4" X 1 1/4" X 3/16" - TYPICAL.
5. WELD BEAM TO BEAM AND BEAM TO PLATE.
6. WELD EACH END OF EACH ANGLE - TYPICAL.
7. STEEL PLATE 3/8"x14"x14" WITH 3/4" DIA ANCHORS AT 10" O.C. EACH WAY (4 TOTAL).
8. CENTERLINE OF PLATE.
9. OMIT PLATE AT DETAIL 404A.

404 STEEL BEAM AT STEEL LANDING PAN 730-23M NO SCALE
404A AS NOTED

STEEL STAIR BEAM (ST) SCHEDULE	
MARK	BEAM SIZE
ST1	MC12 x 10.6
ST2	C8 x 18.75
ST3	ANGLE 3 1/2"x3 1/2"x1/4" AT 24" O.C. MIN
ST4	HSS 16x4x3/8"
ST5	HSS 4x4x1/4"
ST6	HSS 12x4x3/8"
ST7	HSS 6x6x1/4"
ST8	C12 x 20.7
ST9	HSS 8x2x3/8

PERFORMANCE SPECIFICATIONS FOR ALTERNATIVE STAIR DESIGNS:

1. STAIRS SHALL BE DESIGNED FOR SELF WEIGHT PLUS A LIVE LOAD EQUAL TO 100 PSF. CONTRACTOR SHALL SUBMIT SHOP DRAWINGS WITH DESIGN CALCULATIONS SEALED BY A REGISTERED ENGINEER FOR REVIEW PRIOR TO MFR.
2. LANDING PANS SHALL BE 12 GAGE MINIMUM. TREAD PANS SHALL BE 14 GAGE MINIMUM. CONCRETE FILL SHALL BE 2" MIN THICK WITH 6x6 - W1.4xW1.4 W.W.F. CENTERED.
3. FOR ACTUAL LANDING AND STAIR PAN CONFIGURATIONS, SEE ARCH'L DRAWINGS.

2 401 TYPICAL STEEL STAIR BEAM SCHEDULE AND NOTES 730-01M NO SCALE

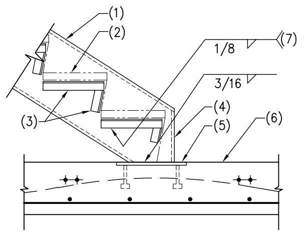

NOTES:

1. STEEL STAIR BEAM.
2. FOR TREADS AND RISERS, SEE ARCH'L DRAWINGS.
3. STEEL ANGLE 1 1/4" X 1 1/4" X 3/16" - TYPICAL.
4. 3/16" CLOSURE PLATE - BUTT WELD ALL AROUND.
5. 1/2"x14"x14" STEEL EMBED PLATE WITH 4 - 3/4" DIA X 4" LONG HEADED STUDS AT 10" O.C. EACH WAY.
6. POST TENSIONED CONCRETE SLAB.
7. EACH END OF EACH ANGLE -TYP.

417 STEEL PAN STAIRS AT POST-TENSIONED CONCRETE SLAB 731-01M NO SCALE

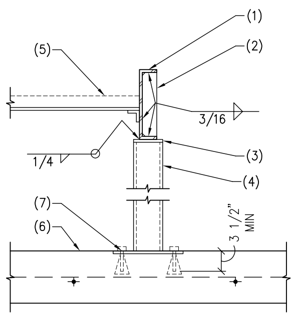

NOTES:

1. STEEL STAIR BEAM.
2. 1/4" STEEL STIFFENER PLATE.
3. 1/4" CAP PLATE (BUTT WELD).
4. HSS 4x4x1/4" STEEL COLUMN.
5. STAIR LANDING.
6. POST TENSIONED CONCRETE SLAB.
7. 1/2"x12"x12" STEEL EMBED PLATE WITH 4 - 3/4" DIA x 4" LONG HEADED STUDS AT 9" O.C. EACH WAY.

413 STEEL STAIR BEAM AND AT STEEL COLUMN AT CONCRETE SLAB 739-02M NO SCALE

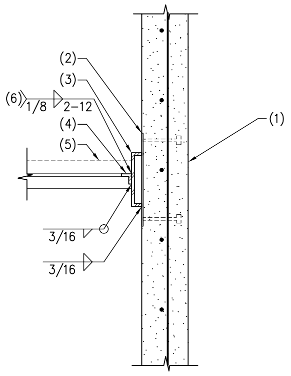

NOTES:

1. CONCRETE WALL.
2. 3/8"x14"x4" (LLV) STEEL PLATE WITH 2 - 3/4" DIA ANCHORS AT 12" O.C. LOCATE PLATES WITHIN 6" OF END OF STAIR BEAM AND AT 48" O.C. MAX (2 MIN PER BEAM).
3. STEEL STAIR BEAM.
4. ANGLE 1 1/4" X 1 1/4" X 3/16" TYPICAL AT LANDING.
5. FOR LANDING SEE ARCHITECTURAL DWGS.
6. WELD ANGLE TO BEAM.

409 STEEL STAIR BEAM AT CONCRETE WALL 734-01M NO SCALE

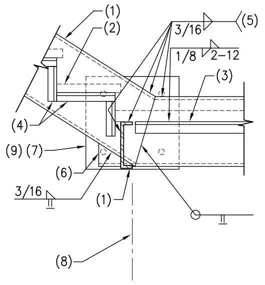

NOTES:

1. STEEL STAIR BEAM.
2. FOR TREADS, RISERS AND LANDING, SEE ARCH'L DWGS.
3. STEEL ANGLE.
4. STEEL ANGLE 1 1/4" X 1 1/4" X 3/16" - TYPICAL.
5. WELD BEAM TO BEAM AND BEAM TO PLATE.
6. PIECE OF STEEL BEAM TO MATCH.
7. STEEL PLATE 3/8"x14"x14" WITH 3/4" DIA ANCHORS AT 10" O.C. EACH WAY (4 TOTAL).
8. CENTERLINE OF PLATE.
9. OMIT PLATE AT DETAIL 405A.

405 STEEL STAIR BEAM CONNECTION AT LANDING PAN 730-20M NO SCALE
405A AS NOTED

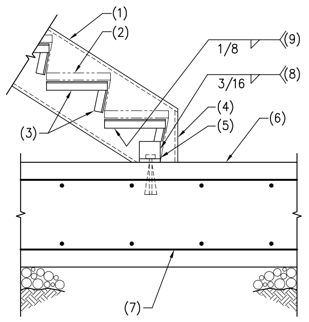

NOTES:

1. STEEL STAIR BEAM.
2. FOR TREADS AND RISERS, SEE ARCH'L DRAWINGS.
3. STEEL ANGLE 1 1/4"x1 1/4"x 3/16" - TYPICAL.
4. 3/16" CLOSURE PLATE - BUTT WELD ALL AROUND.
5. STEEL ANGLE 4"x3"x1/4" (SLV) x 3" LONG WITH 1-3/4" DIA. EXPANSION BOLT.
6. CONCRETE MAT FOUNDATION.
7. REINFORCING PER PLAN.
8. 3 SIDES.
9. EACH END OF EACH ANGLE -TYP.

402 STEEL PAN STAIRS AT SLAB ON GRADE 731-01M NO SCALE

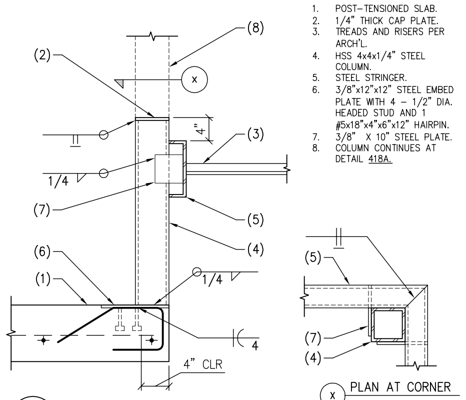

NOTES:

1. POST-TENSIONED SLAB.
2. 1/4" THICK CAP PLATE.
3. TREADS AND RISERS PER ARCH'L.
4. HSS 4x4x1/4" STEEL COLUMN.
5. STEEL STRINGER.
6. 3/8"x12"x12" STEEL EMBED PLATE WITH 4 - 1/2" DIA. HEADED STUD AND 1 #5x18"x4"x6"x12" HAIRPIN.
7. 3/8" X 10" STEEL PLATE.
8. COLUMN CONTINUES AT DETAIL 418A.

X PLAN AT CORNER

418 STAIR COLUMN AT POST-TENSIONED SLAB 13-112 NO SCALE
418A AS NOTED

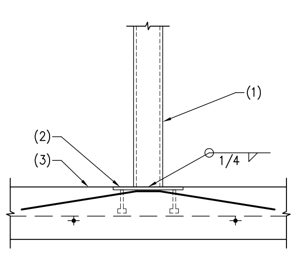

NOTES:

1. STEEL COLUMN.
2. 3/8"x12"x12" STEEL EMBED PLATE WITH 4 - 3/4" DIA. HEADED STUDS AND 2 #4 X 18" X 4" X 18" HAIRPINS AT 6" O.C.
3. POST-TENSION SLAB.

414 STEEL COLUMN AT POST TENSION SLAB 13-112 NO SCALE

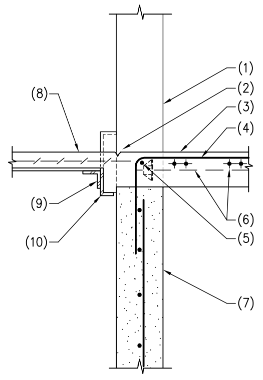

NOTES:

1. WALL BEYOND.
2. TOOLED JOINT.
3. POST-TENSIONED CONCRETE SLAB.
4. HOOKED #4 BAR X 20'-0" LONG AT 16" O.C. - ALTERNATE TOP AND BOTTOM.
5. 1 #4 X WIDTH OF OPENING.
6. POST-TENSIONED TENDONS.
7. CONCRETE WALL.
8. FOR LANDING, SEE ARCH'L.
9. STEEL ANGLE CONT. FROM BEYOND.
10. STEEL STAIR BEAM CONTINUOUS FROM BEYOND. NOTCH TOP FLANGE AS SHOWN.

410 STEEL STAIR BEAM AT CONCRETE WALL OPENING 13-112 NO SCALE

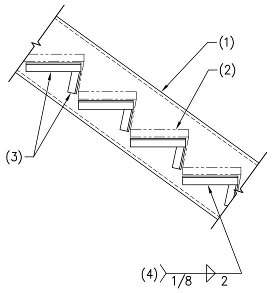

NOTES:

1. STEEL STAIR BEAM.
2. FOR TREADS AND RISERS, SEE ARCHITECTURAL DRAWINGS.
3. ANGLE 1 1/4"x1 1/4"x3/16" - TYPICAL.
4. WELD EACH END OF EACH ANGLE - TYPICAL.

406 TYPICAL STEEL PANS TO STEEL BEAM 730-31 NO SCALE

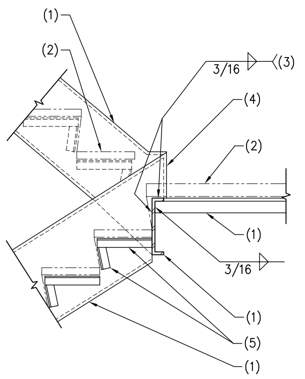

NOTES:

1. STEEL STAIR BEAM.
2. FOR TREADS, RISERS AND LANDING, SEE ARCH'L.
3. AT UP BEAM ALSO.
4. 3/16" CLOSURE PLATES BETWEEN BEAMS AND AT EXPOSED ENDS.
5. ANGLE 1 1/4"x1 1/4"x3/16" - TYP.

403 STEEL STAIR BEAM CONNECTIONS AT LANDING PAN 736-02 NO SCALE

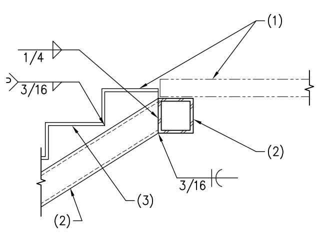

NOTES:

1. LINE OF PRECAST TREADS AND RISERS PER ARCH'L.
2. STEEL STAIR BEAM.
3. 2" WIDE x 3/8" THICK STEEL BENT PLATE.

2 419 STEEL STAIR BEAM AT STEEL STAIR BEAM 13-112 NO SCALE

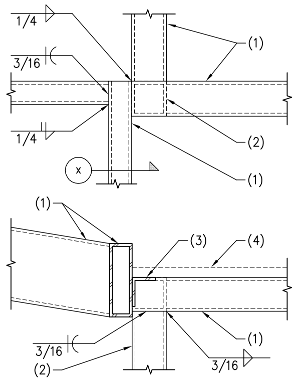

NOTES:

1. STEEL STAIR BEAM.
2. HSS 6x6x1/4" STEEL COLUMN.
3. CONTINUOUS 1/4" STEEL ANGLE.
4. SEE ARCH'L FOR LANDING.

415 PLAN VIEW - STEEL STAIR BEAM AT STEEL COLUMN 13-112 NO SCALE

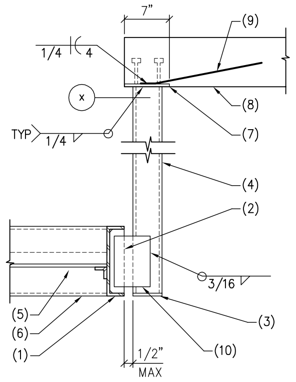

NOTES:

1. STEEL STAIR BEAM.
2. 1/4" STEEL STIFFENER PLATE.
3. 1/4" THICK STEEL CAP PLATE (BUTT WELD).
4. HSS 4x4x1/4" POST.
5. STAIR LANDING.
6. INTERSECTING STAIR BEAM AS OCCURS.
7. 1/2" X 7" X 9" STEEL BEARING PLATE WITH 4 - 3/4" DIA X 4" LONG HEADED STUDS.
8. CONCRETE SLAB.
9. 2 #4 4" 20" BENT AS SHOWN.
10. 3/8" SHEAR PLATE 6"X8" MIN.

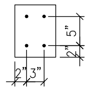

X REFLECTED PLAN VIEW

NOTE:
FOR ADDITIONAL INFORMATION, SEE FLOOR FRAMING PLANS.

411 STEEL STAIR BEAM AT STEEL COLUMN 13-112 NO SCALE

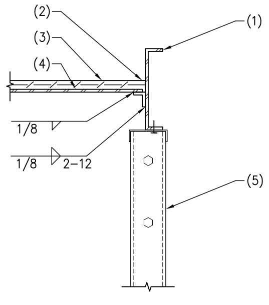

NOTES:

1. STEEL STAIR BEAM.
2. 1 1/4"x1 1/4"x1/4" STEEL ANGLE.
3. CONCRETE TOPPING.
4. STEEL PAN.
5. STEEL STUD WALL AT 407A.

407 STEEL PAN TO STEEL BEAM 730-36M NO SCALE
407A AS NOTED

AWBREY
COOK
MCGILL
architects
1045 14th Street, Suite 100
San Diego, CA 92101-5701
Phone: 619 . 398 . 3480

ARCHITECTS:
THOMAS B. AWBREY C 17578
CLIFFORD W. COOK C 19705
SCOT W. McGILL C 21059

42194
BRADY K. NOTBOHM
8/22/14
EXPIRES 03-31-17

Copyright © 2014
AWBREY COOK MCGILL ARCHITECTS
All ideas, designs, and arrangements indicated on these drawings are the property of AWBREY COOK MCGILL ARCHITECTS and are intended to be used in connection with this specific project only and shall not otherwise be used for any purpose whatsoever without the written consent of the architects. There shall be no changes or deviations from these drawings or the accompanying specifications without the written consent of the architects.

CONSULTANTS:
CARUSO TURLEY SCOTT INC.
consulting structural engineers
1215 W. Rio Salado Pkwy
Suite 200
Tempe, Arizona 85281
(480) 774-1700
(480) 774-1701 FAX
www.ctsaz.com

ENGINEER: TRM/BKN - JOB NUMBER: 13-112

REVISIONS:
1 PLAN CHECK CORRECTIONS 2/28/14
2 INTERNAL COORD. REVISIONS 5/27/14

THESE DRAWINGS/CALCULATIONS ARE CONSIDERED PRELIMINARY -NOT FOR CONSTRUCTION OR RECORDING UNLESS THE STRUCTURAL ENGINEER OF RECORD'S SEAL IS AFFIXED WITH WRITTEN SIGNATURE.

PROJECT:
MARRIOTT RESIDENCE INN
- COURTYARD @ LUHRS
A Development of - LUHRS CM, LLC
Phoenix, Arizona

DRAWN:	SMV
CHECKED:	BKN/TRM
DATE:	12/16/13
PROJECT NO.:	12-1601

SHEET TITLE:
STAIR
DETAILS

SHEET NO.:
S5.4

AWBREY . COOK . McGILL . ARCHITECTS 1045 14th Street Suite 100, San Diego, California 92101.5701 Telephone 619.398.3480 Fax. 619.398.3488

FINAL FOR CONSTRUCTION - 05/18/15

C:\Users\dfl18\Documents\JOBS\13112\13-112S54.dwg, 8/20/2014 3:34:43 PM

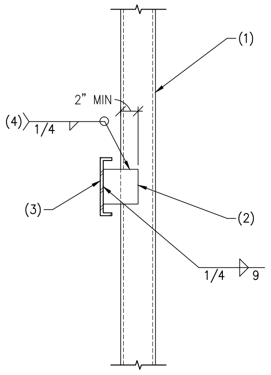

NOTES:

1. STEEL TUBE COLUMN.
2. 3/8" x 10" STEEL PLATE.
3. STEEL STAIR BEAM.
4. USE FLARE BEVEL WELD AS REQUIRED.

432 STEEL STAIR BEAM TO STEEL COLUMN CONNECTION
739–01 NO SCALE

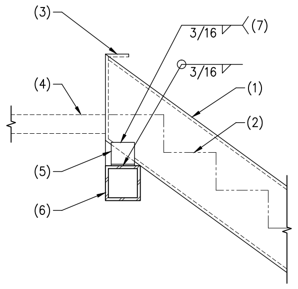

NOTES:

1. STEEL STAIR BEAM.
2. FOR TREADS AND RISERS, SEE ARCHITECTURAL DRAWINGS.
3. LINE OF STAIR BEAM BEYOND.
4. SEE ARCH'L FOR LANDING.
5. 4"x4"x1/4" X 0'–4" LONG STEEL ANGLE.
6. STEEL BEAM.
7. WELD 3 SIDES.

428 STEEL BEAM AT STEEL BEAM
13–112 NO SCALE

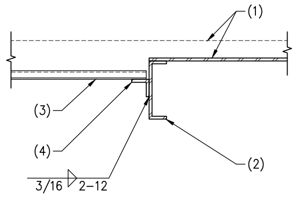

NOTES:

1. CONCRETE LANDING OVER METAL PAN.
2. STEEL STAIR BEAM.
3. 1 1/2" DEEP X 20 GA COMPOSITE FLOOR DECK PER G.S.N.
4. CONTINUOUS 3"x3"x1/4" STEEL LEDGER.

424 STEEL DECK AT STEEL BEAM
13–112 NO SCALE

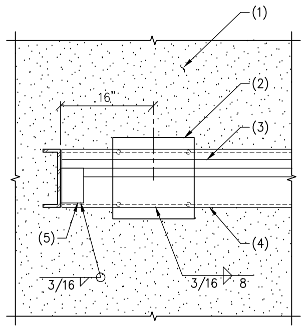

NOTES:

1. CONCRETE WALL.
2. 3/8"x14"x14" STEEL PLATE WITH 3/4"DIA. ANCHORS AT 10" O.C. EACH WAY (4 TOTAL).
3. FOR TREADS, RISERS AND LANDING, SEE ARCH'L.
4. STEEL STAIR BEAM.
5. 4"x4"x1/4" X 0'–6" LONG STEEL ANGLE.

421 STEEL STAIR BEAM AT CONCRETE WALL
13–112 NO SCALE

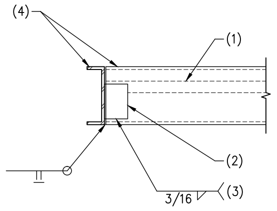

NOTES:

1. SEE ARCH'L FOR LANDING.
2. 4"x4"x1/4" X 0'–6" LONG STEEL ANGLE.
3. WELD THREE SIDES.
4. STEEL STAIR BEAM.

429 STEEL BEAM AT STEEL BEAM
13–112 NO SCALE

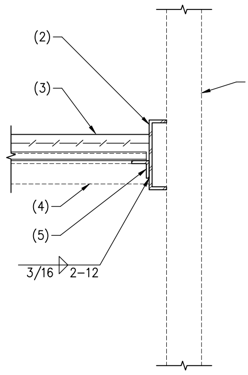

NOTES:

1. STUD WALL FRAMING AS OCCURS.
2. STEEL STAIR BEAM.
3. CONCRETE OVER STEEL DECK PER PLAN.
4. LINE OF BEAM AS OCCURS.
5. CONTINUOUS 3"x3"x1/4" STEEL ANGLE.

425 STEEL DECK AT STEEL BEAM
13–112 NO SCALE

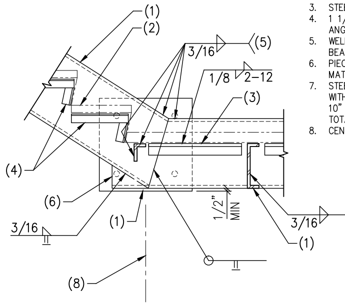

NOTES:

1. STEEL STAIR BEAM.
2. FOR TREADS, RISERS AND LANDING, SEE ARCH'L DRAWINGS.
3. STEEL ANGLE.
4. 1 1/4"x1 1/4"x3/16" STEEL ANGLE – TYPICAL.
5. WELD BEAM TO BEAM AND BEAM TO PLATE.
6. PIECE OF STEEL BEAM TO MATCH.
7. STEEL PLATE 3/8"x14"x14" WITH 3/4" DIA ANCHORS AT 10" O.C. EACH WAY (4 TOTAL).
8. CENTERLINE OF PLATE.

422 STEEL STAIR BEAM CONNECTION AT LANDING PAN
730–22M NO SCALE

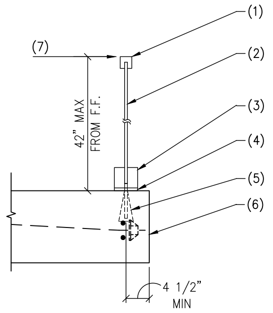

NOTES:

1. BLUMCRAFT 324 TOP RAIL CONT OVER 3 PANELS MIN.
2. 1/2"x48" LONG TEMPERED GLASS.
3. CRL B55 STANDARD BASE SHOE WITH (4) 3 1/2" WIDE CRL GLASS WEDGES PER PANEL (WET SET SYSTEM).
4. CRL ALUMINUM DRAIN BLOCK AT 8" O.C.
5. HILTI 'KWIK BOLT TZ' 1/2" DIA. WITH 3 1/2" MIN EMBEDMENT AT 8" O.C.
6. POST TENSIONED CONCRETE SLAB.
7. GLASS RAIL MANUFACTURER SHALL DESIGN FOR A 200 PLF OR 800 LB POINT LOAD ALONG TOP OF RAIL (LOADS. INCLUDE A SAFETY FACTOR OF 4).

430 GLASS RAILING AT CONCRETE SLAB
13–112 NO SCALE

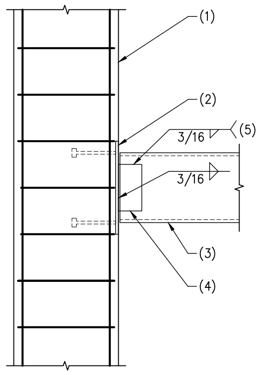

NOTES:

1. CONCRETE COLUMN.
2. 1/2"x16"x16" STEEL PLATE WITH 4 – 3/4" DIA. X 8" LONG HEADED STUDS AT 12" O.C. EACH WAY.
3. STEEL BEAM.
4. 4"x4"x1/4" X 0'–8" LONG STEEL ANGLE.
5. WELD THREE SIDES.

426 STEEL BEAM AT CONCRETE COLUMN
13–112 NO SCALE

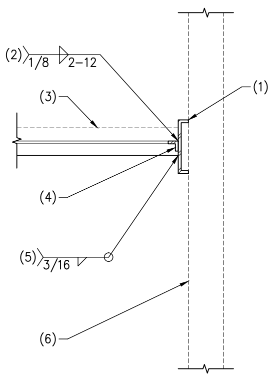

NOTES:

1. STEEL STAIR BEAM.
2. WELD ANGLE TO BEAM.
3. FOR LANDING, SEE ARCH'L DRAWINGS.
4. STEEL ANGLE 1 1/4"x1 1/4"x3/16" TYPICAL BETWEEN BEAMS.
5. WELD BEAM TO BEAM.
6. LINE OF STEEL STUD WALL AS OCCURS.

423 STAIR LANDING AT STEEL STAIR BEAM
736–11M NO SCALE

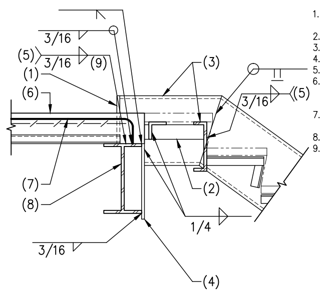

NOTES:

1. 3/16" END PLATES – BUTT WELD ALL AROUND.
2. LANDING EDGE ANGLE.
3. STEEL STAIR BEAM.
4. PLATE 3/8" x 6".
5. STAIR BEAM TO BEAM.
6. CONCRETE OVER STEEL DECK FOR DIRECTION OF DECK – SEE PLAN.
7. #4 x 24" x AS REQUIRED AT 24" O.C. – 2 MIN.
8. STEEL BEAM.
9. EXTEND STAIR BEAM 1" BEYOND CENTERLINE OF STEEL BEAM – WELD FULL. LENGTH.

431 STEEL STAIR BEAM TO STEEL BEAM CONNECTION AT LANDING
736–51.06 NO SCALE

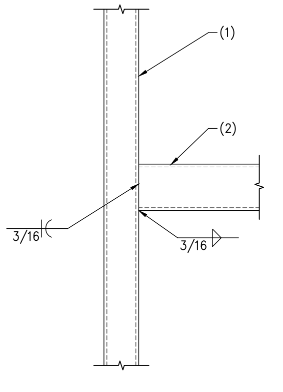

1. STEEL COLUMN
2. STEEL BEAM.

427 STEEL BEAM AT STEEL COLUMN
13–112 NO SCALE

THESE DRAWINGS/CALCULATIONS ARE CONSIDERED PRELIMINARY –NOT FOR CONSTRUCTION OR RECORDING UNLESS THE STRUCTURAL ENGINEER OF RECORD'S SEAL IS AFFIXED WITH WRITTEN SIGNATURE.

AWBREY
COOK
MCGILL
architects
1045 14th Street, Suite 100
San Diego, CA 92101-5701
Phone: 619 . 398 . 3480

ARCHITECTS:

THOMAS B. AWBREY	C 17578
CLIFFORD W. COOK	C 19705
SCOT W. McGILL	C 21059

42194
BRADY K. NOTBOHM
02/20/15
EXPIRES 03-31-17

Copyright © 2014
AWBREY COOK MCGILL ARCHITECTS
All ideas, designs, and arrangements indicated on these drawings are the property of AWBREY COOK MCGILL ARCHITECTS and are intended to be used in connection with this specific project only and shall not otherwise be used for any purpose whatsoever without the written consent of the architects. There shall be no changes or deviations from these drawings or the accompanying specifications without the written consent of the architects.

CONSULTANTS:

CARUSO
TURLEY
SCOTT
INC.
consulting
structural
engineers
1215 W. Rio Salado Pkwy
Suite 200
Tempe, Arizona 85281
(480) 774–1700
(480) 774–1701 FAX
www.ctsaz.com

ENGINEER: TRM/BKN – JOB NUMBER: 13–112

REVISIONS:

A	ADDENDUM A	02/02/15
1	INSTRUCTION BULLETIN 1	02/23/15

PROJECT:

MARRIOTT RESIDENCE INN
- COURTYARD @ LUHRS
A Development of - LUHRS CM, LLC
Phoenix, Arizona

DRAWN:	SMV
CHECKED:	BKN/TRM
DATE:	12/16/13
PROJECT NO.:	12–1601

SHEET TITLE:
STAIR DETAILS

SHEET NO.:
S5.5

AWBREY . COOK . McGILL . ARCHITECTS 1045 14th Street Suite 100, San Diego, California 92101.5701 Telephone 619.398.3480 Fax. 619.398.3488

FINAL FOR CONSTRUCTION - 05/18/15