CITY OF PHOENIX, ARIZONA

SKY HARBOR INTERNATIONAL AIRPORT

PHOENIX SKY TRAIN

STAGE 2

PACKAGE B03

ISSUED FOR CONSTRUCTION

APRIL 13, 2018

AIP NO. AV10000011

VICINITY MAP

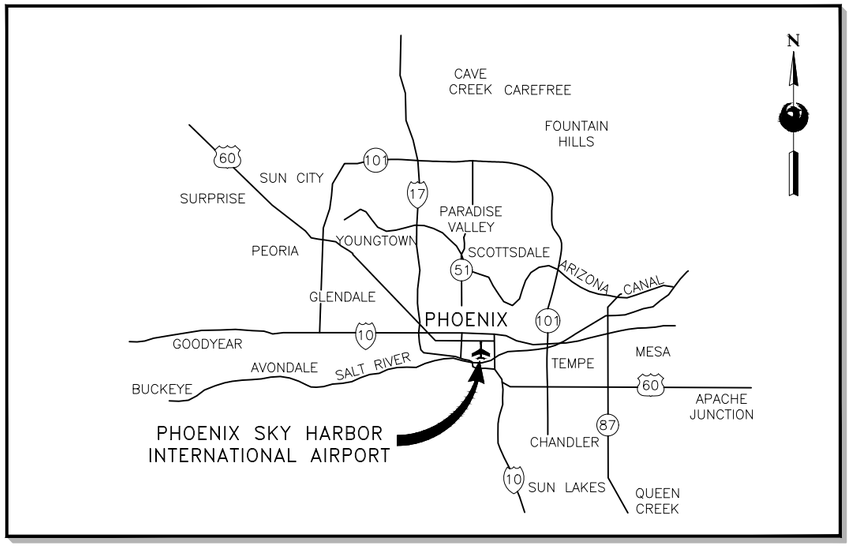

PHOENIX SKY HARBOR
INTERNATIONAL AIRPORT

PER CITY OF PHOENIX ORDINANCE G-4396, THESE PLANS ARE FOR OFFICIAL USE ONLY AND MAY NOT BE SHARED WITH OTHERS EXCEPT AS REQUIRED TO FULFILL THE OBLIGATIONS OF YOUR CONTRACT WITH THE CITY OF PHOENIX.

PROJECT MAP

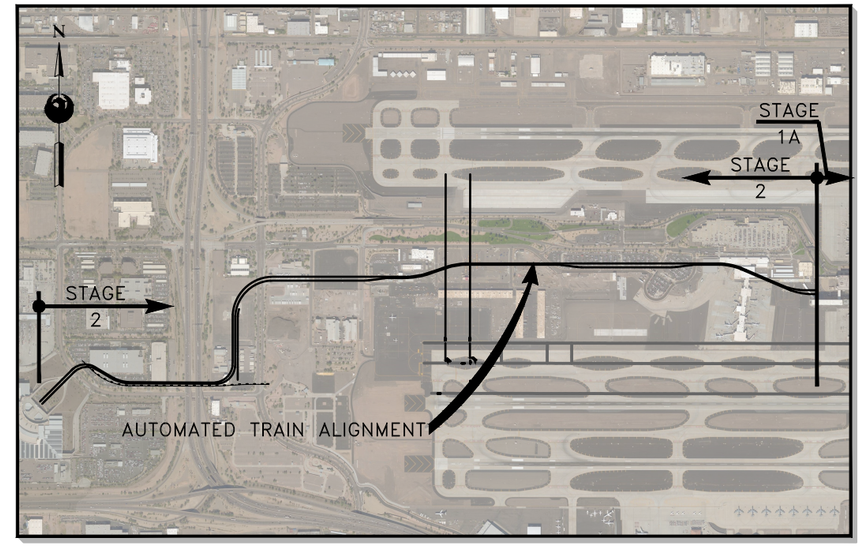

PHOENIX CITY COUNCIL

DISTRICT 1	THELDA WILLIAMS
DISTRICT 2	JIM WARING
DISTRICT 3	DEBRA STARK
DISTRICT 4	LAURA PASTOR, VICE MAYOR
DISTRICT 5	DANIEL VALENZUELA
DISTRICT 6	SAL DICICCIO
DISTRICT 7	MICHAEL NOWAKOWSKI
DISTRICT 8	KATE GALLEGO

MAYOR

GREG STANTON

AVIATION ADVISORY BOARD

STEPHANIE FLEISCHMAN CHERNY – CHAIRPERSON
ED MALDONADO – VICE CHAIRPERSON

VERMA PASTOR	ALAN POWELL
BYRON JONES	LEEZIE KIM
PETE GORRAIZ	ART HAMILTON
KARLENE KEOGH PARKS	

Registered Professional Engineer (Civil) CERTIFICATE NO. 28174 MARK PILWALLIS Date Signed 4-13-18 ARIZONA, U.S.A. EXPIRES 09/30/2018

CITY OF PHOENIX

200 WEST WASHINGTON ST.
PHOENIX, AZ 85003

APPROVAL

JAMES BENNETT
AVIATION DIRECTOR

DATE

GENERAL PLANS

V1–001	MSGN0001	COVER SHEET
V1–002	MSGN0002	INDEX OF DRAWINGS –1
V1–003	MSGN0003	INDEX OF DRAWINGS –2
V1–004	MSGN0004	HORIZONTAL AND VERTICAL, CONTROL PLAN
V1–005	MSGN0005	HORIZONTAL AND VERTICAL, CONTROL PLAN

GUIDEWAY - PLAN AND PROFILE

V1–006	MSCV0000	GUIDEWAY, OVERALL PLAN LAYOUT
V1–007	MSCV0201	GUIDEWAY, ALIGNMENT DEFINITIONS
V1–008	MSCV1101	GUIDEWAY, PLAN & PROFILE, WB ALIGNMENT, STA. 11+83.39 TO STA. 19+00
V1–009	MSCV1102	GUIDEWAY, PLAN & PROFILE, WB ALIGNMENT, STA. 19+00 TO STA. 27+00
V1–010	MSCV1103	GUIDEWAY, PLAN & PROFILE, WB ALIGNMENT, STA. 27+00 TO STA. 35+00
V1–011	MSCV1104	GUIDEWAY, PLAN & PROFILE,WB ALIGNMENT, STA. 35+00 STA. 41+50
V1–012	MSCV1105	GUIDEWAY, PLAN & PROFILE,WB ALIGNMENT, STA. 41+50 TO STA. 49+50
V1–013	MSCV1106	GUIDEWAY, PLAN & PROFILE,WB ALIGNMENT, STA. 49+50 TO STA. 57+50
V1–014	MSCV1107	GUIDEWAY, PLAN & PROFILE,WB ALIGNMENT, STA. 57+50 TO STA. 65+50
V1–015	MSCV1108	GUIDEWAY, PLAN & PROFILE, WB ALIGNMENT, STA. 65+50 TO STA. 73+50
V1–016	MSCV1109	GUIDEWAY, PLAN & PROFILE, WB ALIGNMENT, STA. 73+50 TO STA. 81+50
V1–017	MSCV1110	GUIDEWAY, PLAN & PROFILE, WB ALIGNMENT, STA. 81+50 TO STA. 89+50
V1–018	MSCV1111	GUIDEWAY, PLAN & PROFILE, WB ALIGNMENT, STA. 89+50 TO STA. 97+50
V1–019	MSCV1112	GUIDEWAY, PLAN & PROFILE, WB ALIGNMENT, STA. 97+50 TO STA. 105+50
V1–020	MSCV1113	GUIDEWAY, PLAN & PROFILE, WB ALIGNMENT, STA. 105+50 TO STA. 113+50
V1–021	MSCV1114	GUIDEWAY, PLAN & PROFILE, WB ALIGNMENT, STA. 113+50 TO STA. 121+50
V1–022	MSCV1115	GUIDEWAY, PLAN & PROFILE, WB ALIGNMENT, STA. 121+50 TO STA. 128+64.67
V1–023	MSCV1116	GUIDEWAY, PLAN & PROFILE, EB ALIGNMENT, STA. 412+27.00 TO STA. 419+50
V1–024	MSCV1117	GUIDEWAY, PLAN & PROFILE, EB ALIGNMENT, STA. 419+50 TO STA. 427+50
V1–025	MSCV1118	GUIDEWAY, PLAN & PROFILE, EB ALIGNMENT, STA. 427+50 TO STA. 435+50
V1–026	MSCV1119	GUIDEWAY, PLAN & PROFILE, EB ALIGNMENT, STA. 435+50 TO STA. 442+00
V1–027	MSCV1120	GUIDEWAY, PLAN & PROFILE, EB ALIGNMENT, STA. 442+00 TO STA. 450+00
V1–028	MSCV1121	GUIDEWAY, PLAN & PROFILE, EB ALIGNMENT, STA. 450+00 TO STA. 457+50
V1–029	MSCV1122	GUIDEWAY, PLAN & PROFILE, EB ALIGNMENT, STA. 457+50 TO STA. 465+50
V1–030	MSCV1123	GUIDEWAY, PLAN & PROFILE, EB ALIGNMENT, STA. 465+50 TO STA. 473+50
V1–031	MSCV1124	GUIDEWAY, PLAN & PROFILE, EB ALIGNMENT, STA. 473+50 TO STA. 481+50
V1–032	MSCV1125	GUIDEWAY, PLAN & PROFILE, EB ALIGNMENT, STA. 481+50 TO STA. 489+50
V1–033	MSCV1126	GUIDEWAY, PLAN & PROFILE, EB ALIGNMENT, STA. 489–50 TO STA. 497+50
V1–034	MSCV1127	GUIDEWAY, PLAN & PROFILE, EB ALIGNMENT, STA. 497+50 TO STA. 505+50
V1–035	MSCV1128	GUIDEWAY, PLAN & PROFILE, EB ALIGNMENT, STA. 505+500 TO STA. 513+50
V1–036	MSCV1129	GUIDEWAY, PLAN & PROFILE, EB ALIGNMENT, STA. 513+50 TO STA. 521+50
V1–037	MSCV1130	GUIDEWAY, PLAN & PROFILE, EB ALIGNMENT, STA. 521+50 TO STA. 528+64.30
V1–038	MSCV1131	GUIDEWAY, PLAN & PROFILE, EB ALIGNMENT, STA. 0+00 TO STA. 9+35.55

ELEVATED GUIDEWAY - ABUTMENTS, COLUMNS AND PIER CAPS

V1–039	GWSG0601	GUIDEWAY, ELEVATED ALIGNMENT, ABUTMENT 1, PLAN AND ELEVATION
V1–040	GWSG0602	GUIDEWAY, ELEVATED ALIGNMENT, ABUTMENT 2, PLAN AND ELEVATION
V1–041	GWSG0603	GUIDEWAY, ELEVATED ALIGNMENT, ABUTMENT 3, PLAN AND ELEVATION
V1–042	GWSG0604	GUIDEWAY, ELEVATED ALIGNMENT, ABUTMENT 4, PLAN AND ELEVATION
V1–043	GWSG0610	GUIDEWAY, ELEVATED ALIGNMENT, ABUTMENT 1, 3 & 4, REINFORCEMENT DETAILS 1
V1–044	GWSG0611	GUIDEWAY, ELEVATED ALIGNMENT, ABUTMENT 2, REINFORCEMENT & DETAILS 1
V1–045	GWSG0612	GUIDEWAY, ELEVATED ALIGNMENT, ABUTMENT 1,2,3,& 4, REINFORCEMENT DETAILS 2
V1–046	GWSG0801	GUIDEWAY, ELEVATED ALIGNMENT, COLUMN DETAILS
V1–047	GWSG0802	GUIDEWAY, ELEVATED ALIGNMENT, PIER CAP GEOMETRY, PLAN AND ELEVATION, PIER 1
V1–048	GWSG0803	GUIDEWAY, ELEVATED ALIGNMENT, PIER CAP GEOMETRY, PLAN AND ELEVATION, PIER 2
V1–049	GWSG0804	GUIDEWAY, ELEVATED ALIGNMENT, PIER CAP GEOMETRY, PLAN AND ELEVATION, PIER 3
V1–050	GWSG0805	GUIDEWAY, ELEVATED ALIGNMENT, PIER CAP GEOMETRY, PLAN AND ELEVATION, PIER 4
V1–051	GWSG0806	GUIDEWAY, ELEVATED ALIGNMENT, PIER CAP GEOMETRY, PLAN AND ELEVATION, PIER 5
V1–052	GWSG0807	GUIDEWAY, ELEVATED ALIGNMENT, PIER CAP GEOMETRY, PLAN AND ELEVATION, PIER 6
V1–053	GWSG0808	GUIDEWAY, ELEVATED ALIGNMENT, PIER CAP GEOMETRY, PLAN AND ELEVATION, PIER 7
V1–054	GWSG0809	GUIDEWAY, ELEVATED ALIGNMENT, PIER CAP GEOMETRY, PLAN AND ELEVATION, PIER 8
V1–055	GWSG0810	GUIDEWAY, ELEVATED ALIGNMENT, PIER CAP GEOMETRY, PLAN AND ELEVATION, PIER 9
V1–056	GWSG0811	GUIDEWAY, ELEVATED ALIGNMENT, PIER CAP GEOMETRY, PLAN AND ELEVATION, PIER 10
V1–057	GWSG0812	GUIDEWAY, ELEVATED ALIGNMENT, PIER CAP GEOMETRY, PLAN AND ELEVATION, PIER 11
V1–058	GWSG0813	GUIDEWAY, ELEVATED ALIGNMENT, PIER CAP GEOMETRY, PLAN AND ELEVATION, PIER 12
V1–059	GWSG0814	GUIDEWAY, ELEVATED ALIGNMENT, PIER CAP GEOMETRY, PLAN AND ELEVATION, PIER 13
V1–060	GWSG0815	GUIDEWAY, ELEVATED ALIGNMENT, PIER CAP GEOMETRY, PLAN AND ELEVATION, PIER 14
V1–061	GWSG0816	GUIDEWAY, ELEVATED ALIGNMENT, PIER CAP GEOMETRY, PLAN AND ELEVATION, PIER 15
V1–062	GWSG0817	GUIDEWAY, ELEVATED ALIGNMENT, PIER CAP GEOMETRY, PLAN AND ELEVATION, PIER 16
V1–063	GWSG0818	GUIDEWAY, ELEVATED ALIGNMENT, PIER CAP GEOMETRY, PLAN AND ELEVATION, PIER 17
V1–064	GWSG0819	GUIDEWAY, ELEVATED ALIGNMENT, PIER CAP GEOMETRY, PLAN AND ELEVATION, PIER 18
V1–065	GWSG0820	GUIDEWAY, ELEVATED ALIGNMENT, PIER CAP GEOMETRY, PLAN AND ELEVATION, PIER 19
V1–066	GWSG0821	GUIDEWAY, ELEVATED ALIGNMENT, PIER CAP GEOMETRY, PLAN AND ELEVATION, PIER 20
V1–067	GWSG0822	GUIDEWAY, ELEVATED ALIGNMENT, PIER CAP GEOMETRY, PLAN AND ELEVATION, PIER 21
V1–068	GWSG0823	GUIDEWAY, ELEVATED ALIGNMENT, PIER CAP GEOMETRY, PLAN AND ELEVATION, PIER 22
V1–069	GWSG0824	GUIDEWAY, ELEVATED ALIGNMENT, PIER CAP GEOMETRY, PLAN AND ELEVATION, PIER 23
V1–070	GWSG0825	GUIDEWAY, ELEVATED ALIGNMENT, PIER CAP GEOMETRY, PLAN AND ELEVATION, PIER 24
V1–071	GWSG0826	GUIDEWAY, ELEVATED ALIGNMENT, PIER CAP GEOMETRY, PLAN AND ELEVATION, PIER 25
V1–072	GWSG0827	GUIDEWAY, ELEVATED ALIGNMENT, PIER CAP GEOMETRY, PLAN AND ELEVATION, PIER 26
V1–073	GWSG0828	GUIDEWAY, ELEVATED ALIGNMENT, PIER CAP GEOMETRY, PLAN AND ELEVATION, PIER 27
V1–074	GWSG0829	GUIDEWAY, ELEVATED ALIGNMENT, PIER CAP GEOMETRY, PLAN AND ELEVATION, PIER 28
V1–075	GWSG0830	GUIDEWAY, ELEVATED ALIGNMENT, PIER CAP GEOMETRY, PLAN AND ELEVATION, PIER 29
V1–076	GWSG0831	GUIDEWAY, ELEVATED ALIGNMENT, PIER CAP GEOMETRY, PLAN AND ELEVATION, PIER 30
V1–077	GWSG0832	GUIDEWAY, ELEVATED ALIGNMENT, PIER CAP GEOMETRY, PLAN AND ELEVATION, PIER 31
V1–078	GWSG0833	GUIDEWAY, ELEVATED ALIGNMENT, PIER CAP GEOMETRY, PLAN AND ELEVATION, PIER 32
V1–079	GWSG0834	GUIDEWAY, ELEVATED ALIGNMENT, PIER CAP GEOMETRY, PLAN AND ELEVATION, PIER 33
V1–080	GWSG0835	GUIDEWAY, ELEVATED ALIGNMENT, PIER CAP GEOMETRY, PLAN AND ELEVATION, PIER 34
V1–081	GWSG0836	GUIDEWAY, ELEVATED ALIGNMENT, PIER CAP GEOMETRY, PLAN AND ELEVATION, PIER 35
V1–082	GWSG0837	GUIDEWAY, ELEVATED ALIGNMENT, PIER CAP GEOMETRY, PLAN AND ELEVATION, PIER 36
V1–083	GWSG0838	GUIDEWAY, ELEVATED ALIGNMENT, PIER CAP GEOMETRY, PLAN AND ELEVATION, PIER 37
V1–084	GWSG0839	GUIDEWAY, ELEVATED ALIGNMENT, PIER CAP GEOMETRY, PLAN AND ELEVATION, PIER 38
V1–085	GWSG0840	GUIDEWAY, ELEVATED ALIGNMENT, PIER CAP GEOMETRY, PLAN AND ELEVATION, PIER 39
V1–086	GWSG0841	GUIDEWAY, ELEVATED ALIGNMENT, PIER CAP GEOMETRY, PLAN AND ELEVATION, PIER 40
V1–087	GWSG0842	GUIDEWAY, ELEVATED ALIGNMENT, PIER CAP GEOMETRY, PLAN AND ELEVATION, PIER 41
V1–088	GWSG0843	GUIDEWAY, ELEVATED ALIGNMENT, PIER CAP GEOMETRY, PLAN AND ELEVATION, PIER 42
V1–089	GWSG0844	GUIDEWAY, ELEVATED ALIGNMENT, PIER CAP GEOMETRY, PLAN AND ELEVATION, PIER 43
V1–090	GWSG0845	GUIDEWAY, ELEVATED ALIGNMENT, PIER CAP GEOMETRY, PLAN AND ELEVATION, PIER 44
V1–091	GWSG0846	GUIDEWAY, ELEVATED ALIGNMENT, PIER CAP GEOMETRY, PLAN AND ELEVATION, PIER 45
V1–092	GWSG0847	GUIDEWAY, ELEVATED ALIGNMENT, PIER CAP GEOMETRY, PLAN AND ELEVATION, PIER 46
V1–093	GWSG0848	GUIDEWAY, ELEVATED ALIGNMENT, PIER CAP GEOMETRY, PLAN AND ELEVATION, PIER 47
V1–094	GWSG0849	GUIDEWAY, ELEVATED ALIGNMENT, PIER CAP GEOMETRY, PLAN AND ELEVATION, PIER 48
V1–095	GWSG0850	GUIDEWAY, ELEVATED ALIGNMENT, PIER CAP GEOMETRY, PLAN AND ELEVATION, PIER 49
V1–096	GWSG0851	GUIDEWAY, ELEVATED ALIGNMENT, PIER CAP GEOMETRY, PLAN AND ELEVATION, PIER 50
V1–097	GWSG0852	GUIDEWAY, ELEVATED ALIGNMENT, PIER CAP GEOMETRY, PLAN AND ELEVATION, PIER 51
V1–098	GWSG0853	GUIDEWAY, ELEVATED ALIGNMENT, PIER CAP GEOMETRY, PLAN AND ELEVATION, PIER 52
V1–099	GWSG0854	GUIDEWAY, ELEVATED ALIGNMENT, PIER CAP GEOMETRY, PLAN AND ELEVATION, PIER 53
V1–100	GWSG0855	GUIDEWAY, ELEVATED ALIGNMENT, PIER CAP GEOMETRY, PLAN AND ELEVATION, PIER 54
V1–101	GWSG0856	GUIDEWAY, ELEVATED ALIGNMENT, PIER CAP GEOMETRY, PLAN AND ELEVATION, PIER 55
V1–102	GWSG0857	GUIDEWAY, ELEVATED ALIGNMENT, PIER CAP GEOMETRY, PLAN AND ELEVATION, PIER 56
V1–103	GWSG0858	GUIDEWAY, ELEVATED ALIGNMENT, PIER CAP GEOMETRY, PLAN AND ELEVATION, PIER 57
V1–104	GWSG0859	GUIDEWAY, ELEVATED ALIGNMENT, PIER CAP GEOMETRY, PLAN AND ELEVATION, PIER 58
V1–105	GWSG0860	GUIDEWAY, ELEVATED ALIGNMENT, PIER CAP GEOMETRY, PLAN AND ELEVATION, PIER 59
V1–106	GWSG0861	GUIDEWAY, ELEVATED ALIGNMENT, PIER CAP GEOMETRY, PLAN AND ELEVATION, PIER 60
V1–107	GWSG0862	GUIDEWAY, ELEVATED ALIGNMENT, PIER CAP GEOMETRY, PLAN AND ELEVATION, PIER 61
V1–108	GWSG0863	GUIDEWAY, ELEVATED ALIGNMENT, PIER CAP GEOMETRY, PLAN AND ELEVATION, PIER 62
V1–109	GWSG0864	GUIDEWAY, ELEVATED ALIGNMENT, PIER CAP GEOMETRY, PLAN AND ELEVATION, PIER 63
V1–110	GWSG0865	GUIDEWAY, ELEVATED ALIGNMENT, PIER CAP GEOMETRY, PLAN AND ELEVATION, PIER 64
V1–111	GWSG0866	GUIDEWAY, ELEVATED ALIGNMENT, PIER CAP GEOMETRY, PLAN AND ELEVATION, PIER 65
V1–112	GWSG0867	GUIDEWAY, ELEVATED ALIGNMENT, PIER CAP GEOMETRY, PLAN AND ELEVATION, PIER 66
V1–113	GWSG0868	GUIDEWAY, ELEVATED ALIGNMENT, PIER CAP GEOMETRY, PLAN AND ELEVATION, PIER 67
V1–114	GWSG0869	GUIDEWAY, ELEVATED ALIGNMENT, PIER CAP GEOMETRY, PLAN AND ELEVATION, PIER 68
V1–115	GWSG0870	GUIDEWAY, ELEVATED ALIGNMENT, PIER CAP GEOMETRY, PLAN AND ELEVATION, PIER 69
V1–116	GWSG0871	GUIDEWAY, ELEVATED ALIGNMENT, PIER CAP GEOMETRY, PLAN AND ELEVATION, PIER 70
V1–117	GWSG0872	GUIDEWAY, ELEVATED ALIGNMENT, PIER CAP GEOMETRY, PLAN AND ELEVATION, PIER 71
V1–118	GWSG0873	GUIDEWAY, ELEVATED ALIGNMENT, PIER CAP GEOMETRY, PLAN AND ELEVATION, PIER 72
V1–119	GWSG0874	GUIDEWAY, ELEVATED ALIGNMENT, PIER CAP GEOMETRY, PLAN AND ELEVATION, PIER 73
V1–120	GWSG0875	GUIDEWAY, ELEVATED ALIGNMENT, PIER CAP GEOMETRY, PLAN AND ELEVATION, PIER 74
V1–121	GWSG0876	GUIDEWAY, ELEVATED ALIGNMENT, PIER CAP GEOMETRY, PLAN AND ELEVATION, PIER 75
V1–122	GWSG0877	GUIDEWAY, ELEVATED ALIGNMENT, PIER CAP REINFORCEMENT DETAILS, STRADDLE PIER CAPS
V1–123	GWSG0878	GUIDEWAY, ELEVATED ALIGNMENT, PIER CAP REINFORCEMENT DETAILS, SMALL HAMMERHEAD PIER CAPS
V1–124	GWSG0879	GUIDEWAY, ELEVATED ALIGNMENT, PIER CAP REINFORCEMENT DETAILS, LARGE HAMMERHEAD PIER CAPS
V1–125	GWSG0880	GUIDEWAY, ELEVATED ALIGNMENT, PIER CAP REINFORCEMENT DETAILS, XL HAMMERHEAD PIER CAPS
V1–126	GWSG0891	GUIDEWAY, ELEVATED ALIGNMENT, FIXED AND EXPANSION, RESTRAINER DETAILS

ELEVATED GUIDEWAY - DRAINAGE

V1–127	MSCV0901	GUIDEWAY, GUIDEWAY DRAINAGE PLAN, TRENCH DRAIN DOWNSPOUT PLAN, RENTAL CAR CENTER
V1–128	MSCV0902	GUIDEWAY, GUIDEWAY DRAINAGE PLAN, TRENCH DRAIN DOWNSPOUT PLAN, SKY HARBOR CIRCLE
V1–129	MSCV0903	GUIDEWAY, GUIDEWAY DRAINAGE PLAN, TRENCH DRAIN DOWNSPOUT PLAN, SKY HARBOR CIRCLE
V1–130	MSCV0904	GUIDEWAY, GUIDEWAY DRAINAGE PLAN, TRENCH DRAIN DOWNSPOUT PLAN, 24TH STREET
V1–131	MSCV0905	GUIDEWAY, GUIDEWAY DRAINAGE PLAN, TRENCH DRAIN DOWNSPOUT PLAN, 24TH STREET STATION
V1–132	MSCV0906	GUIDEWAY, GUIDEWAY DRAINAGE PLAN, TRENCH DRAIN DOWNSPOUT PLAN, AIRSIDE SERVICE ROAD
V1–133	MSCV0907	GUIDEWAY, ELEVATED GUIDEWAY, TRENCH DRAIN DOWNSPOUT PLAN, BUCKEYE ROAD
V1–134	MSCV0908	GUIDEWAY, ELEVATED GUIDEWAY, TRENCH DRAIN DOWNSPOUT PLAN, WEST TERMINAL STATION
V1–135	MSCV0909	GUIDEWAY, ELEVATED GUIDEWAY, TRENCH DRAIN DOWNSPOUT PLAN, WEST ECONOMY LOT
V1–136	MSCV0910	GUIDEWAY, ELEVATED GUIDEWAY, TRENCH DRAIN DOWNSPOUT PLAN, AIRSIDE T2 TO T3
V1–137	MSCV0911	GUIDEWAY, ELEVATED GUIDEWAY, TRENCH DRAIN DOWNSPOUT PLAN, AIRSIDE T2 TO T3
V1–138	MSCV1201	GUIDEWAY, GUIDEWAY DRAINAGE PLAN, TRENCH DRAIN DETAILS
V1–139	MSCV1202	GUIDEWAY, GUIDEWAY DRAINAGE PLAN, TRENCH DRAIN DETAILS
V1–140	MSCV1203	GUIDEWAY, GUIDEWAY DRAINAGE PLAN, TRENCH DRAIN DETAILS

ON GRADE GUIDEWAY - STORM DRAIN, DEMO AND CIVIL IMPROVEMENTS

V1–141	MSCV0912	GUIDEWAY, ON GRADE GUIDEWAY, STORM DRAIN, DEMOLITION AND, IMPROVEMENT PLAN
V1–142	MSCV0913	GUIDEWAY, ON GRADE GUIDEWAY, STORM DRAIN, DEMOLITION AND, IMPROVEMENT PLAN
V1–143	MSCV0914	GUIDEWAY, ON GRADE GUIDEWAY, STORM DRAIN, DEMOLITION AND, IMPROVEMENT PLAN
V1–144	MSCV0915	GUIDEWAY, ON GRADE GUIDEWAY, STORM DRAIN DEMOLITION, AND IMPROVEMENT PLAN, FACILITIES AND SERVICES LOT
V1–145	MSCV0916	GUIDEWAY, ON GRADE GUIDEWAY, STORM DRAIN DEMOLITION, AND IMPROVEMENT PLAN, FACILITIES AND SERVICES LOT
V1–146	MSCV0917	GUIDEWAY, ON GRADE GUIDEWAY, STORM DRAIN DEMOLITION, AND IMPROVEMENT PLAN, FACILITIES AND SERVICES LOT

ON GRADE GUIDEWAY - I-10 CROSSING

V1–147	MSCV0001	GUIDEWAY, I–10 CROSSING, ON GRADE GUIDEWAY, GENERAL STRUCTURAL NOTES
V1–148	MSCV0401	GUIDEWAY, I–10 CROSSING, ON GRADE GUIDEWAY, SECTIONS
V1–149	MSCV0402	GUIDEWAY, I–10 CROSSING, ON GRADE GUIDEWAY, SECTIONS
V1–150	MSCV0403	GUIDEWAY, I–10 CROSSING, ON GRADE GUIDEWAY, SECTIONS
V1–151	MSCV0301	GUIDEWAY, I–10 CROSSING, ON GRADE GUIDEWAY, PLAN
V1–152	MSCV0302	GUIDEWAY, I–10 CROSSING, ON GRADE GUIDEWAY, PLAN
V1–153	MSCV0303	GUIDEWAY, I–10 CROSSING, ON GRADE GUIDEWAY, PLAN
V1–154	MSCV0304	GUIDEWAY, I–10 CROSSING, ON GRADE GUIDEWAY, PLAN
V1–155	MSCV0305	GUIDEWAY, I–10 CROSSING, ON GRADE GUIDEWAY, PLAN
V1–156	MSCV0306	GUIDEWAY, I–10 CROSSING, ON GRADE GUIDEWAY, ENLARGED PLAN – ABUTMENTS
V1–157	MSCV0307	GUIDEWAY, I–10 CROSSING, ON GRADE GUIDEWAY, ENLARGED PLAN – ABUTMENTS
V1–158	MSCV1301	GUIDEWAY, I–10 CROSSING, ON GRADE GUIDEWAY, PROTECTIVE COVER FRAMING PLAN
V1–159	MSCV1302	GUIDEWAY, I–10 CROSSING, ON GRADE GUIDEWAY, PROTECTIVE COVER FRAMING PLAN
V1–160	MSCV1303	GUIDEWAY, I–10 CROSSING, ON GRADE GUIDEWAY, PROTECTIVE COVER DETAILS
V1–161	MSCV1304	GUIDEWAY, I–10 CROSSING, ON GRADE GUIDEWAY, PROTECTIVE COVER DETAILS
V1–162	MSCV1201	GUIDEWAY, I–10 CROSSING, ON GRADE GUIDEWAY, STRUCTURE DETAILS
V1–163	MSCV1202	GUIDEWAY, I–10 CROSSING, ON GRADE GUIDEWAY, STRUCTURE DETAILS
V1–164	MSCV1203	GUIDEWAY, I–10 CROSSING, ON GRADE GUIDEWAY, STRUCTURE DETAILS
V1–165	MSCV1204	GUIDEWAY, I–10 CROSSING, ON GRADE GUIDEWAY, APPROACH SLAB DETAILS
V1–166	MSCV1205	GUIDEWAY, I–10 CROSSING, ON GRADE GUIDEWAY, ANCHOR SLAB DETAILS

TAXIWAYS "U" AND "V" UNDERCROSSING - GUIDEWAY AND SERVICE ROAD

V1–167	WSCV0001	GUIDEWAY, U & V CROSSING, ON GRADE GUIDEWAY, GENERAL STRUCTURAL NOTES
V1–168	WSCV0401	GUIDEWAY, U & V CROSSING, ON GRADE GUIDEWAY, SECTIONS
V1–169	WSCV0402	GUIDEWAY, U & V CROSSING, ON GRADE GUIDEWAY, SECTIONS
V1–170	WSCV0403	GUIDEWAY, U & V CROSSING, ON GRADE GUIDEWAY, SECTIONS
V1–171	WSCV0301	GUIDEWAY, U & V CROSSING, ON GRADE GUIDEWAY, PLAN
V1–172	WSCV0302	GUIDEWAY, U & V CROSSING, ON GRADE GUIDEWAY, PLAN
V1–173	WSCV0303	GUIDEWAY, U & V CROSSING, ON GRADE GUIDEWAY, PLAN
V1–174	WSCV0304	GUIDEWAY, U & V CROSSING, ON GRADE GUIDEWAY, ENLARGED PLAN – ABUTMENTS
V1–175	WSCV0305	GUIDEWAY, U & V CROSSING, ON GRADE GUIDEWAY, ENLARGED PLAN – ABUTMENT
V1–176	WSCV1201	GUIDEWAY, U & V CROSSING, ON GRADE GUIDEWAY, STRUCTURE DETAILS
V1–177	WSCV1202	GUIDEWAY, U & V CROSSING, ON GRADE GUIDEWAY, STRUCTURE DETAILS
V1–178	WSCV1203	GUIDEWAY, U & V CROSSING, ON GRADE GUIDEWAY, APPROACH SLAB DETAILS
V1–179	WSCV1204	GUIDEWAY, U & V CROSSING, ON GRADE GUIDEWAY, ANCHOR SLAB DETAILS

PER CITY OF PHOENIX ORDINANCE G-4390, THESE PLANS ARE FOR YOUR USE ONLY AND MAY NOT BE SHARED WITH OTHERS EXCEPT AS REQUIRED TO FULFILL THE OBLIGATIONS OF YOUR CONTRACT WITH THE CITY OF PHOENIX.

NO.	REVISIONS / SUBMISSIONS	DATE
	ISSUED FOR CONSTRUCTION	04/13/18
	SUBMITTED FOR REVIEW	02/02/18

Registered Professional Engineer (Civil) CERTIFICATE NO. 25174 MARK PILWALLIS Date Signed 04/13/18 ARIZONA U.S.A. EXPIRES 06/30/18

Design Sub-Consultant

Design Consultant
Gannett Fleming

PHX SKY TRAIN
CITY OF PHOENIX AVIATION DEPARTMENT

PHX SKY TRAIN
STAGE 2 DESIGN
500 S. 24TH STREET
PHOENIX, AZ 85034

Designed by: MB
Drawn by: JV
Checked by: MD
Date: 04/13/2018
Dwg scale: NTS
CIP No.: AV10000011
KIVA No.: 07–5204

STAGE 2 – B03 DESIGN SUBMISSION

GENERAL PLANS
INDEX OF DRAWINGS - 1

Package: B03
Sheet Reference No: MSGN0002
V1 - 002 of 339

PLOT DATE: Apr 13, 2018 FILE PATH: C:\pwworking\gfpw01\mbiggs\d0667700\AV10000011-S-2-MSGNB031.dwg mbiggs

TAXIWAYS "U" AND "V" UNDERCROSSING - SUPERSTRUCTURE

V1–180	MSSU0403	GUIDEWAY, TAXIWAY "U" & "V" UNDERCROSSING, FACILITIES ACCESS ROAD BRIDGE, TYPICAL SECTION
V1–181	MSSU0503	GUIDEWAY, TAXIWAY "U" & "V" UNDERCROSSING, FACILITIES ACCESS ROAD BRIDGE, FOUNDATION PLAN
V1–182	MSSU0606	GUIDEWAY, FACILITIES ACCESS BRIDGE, ABUTMENT 1 PLAN AND ELEVATION
V1–183	MSSU0607	GUIDEWAY, TAXIWAY "U" & "V" UNDERCROSSING, FACILITIES ACCESS BRIDGE, ABUTMENT DETAILS
V1–184	MSSU0608	GUIDEWAY, TAXIWAY "U" & "V" UNDERCROSSING, FACILITIES ACCESS BRIDGE, PIER 1 PEDESTAL DETAIL AND SECTION
V1–185	MSSU0901	GUIDEWAY, TAXIWAYS 'U' & 'V' UNDERCROSSING, TAXIWAY "V", FRAMING PLAN
V1–186	MSSU0902	GUIDEWAY, TAXIWAYS 'U' & 'V' UNDERCROSSING, TAXIWAY "U", FRAMING PLAN
V1–187	MSSU0903	GUIDEWAY, TAXIWAYS 'U' & 'V' UNDERCROSSING, TAXIWAY "V", BOX BEAM SCHEDULE
V1–188	MSSU0904	GUIDEWAY, TAXIWAYS 'U' & 'V' UNDERCROSSING, TAXIWAY "U", BOX BEAM SCHEDULE
V1–189	MSSU0905	GUIDEWAY, TAXIWAYS 'U' & 'V' UNDERCROSSING, BEAM DETAILS
V1–190	MSSU0906	GUIDEWAY, TAXIWAYS 'U' & 'V' UNDERCROSSING, DECK DETAILS
V1–191	MSSU0908	GUIDEWAY, TAXIWAYS 'U' & 'V' UNDERCROSSING, TAXIWAY "V", TYPICAL DECK SECTION
V1–192	MSSU0909	GUIDEWAY, TAXIWAYS 'U' & 'V' UNDERCROSSING, TAXIWAY "U", TYPICAL DECK SECTION
V1–193	MSSU0910	GUIDEWAY, TAXIWAYS 'U' & 'V' UNDERCROSSING, FACILITIES ACCESS RD BRIDGE, TYPICAL SECTION
V1–194	MSSU0911	GUIDEWAY, TAXIWAYS 'U' & 'V' UNDERCROSSING, FACILITIES ACCESS ROAD BRIDGE, FRAMING PLAN &, SUPERSTRUCTURE DETAILS
V1–195	MSSU0912	GUIDEWAY, TAXIWAYS 'U' & 'V' UNDERCROSSING, FACILITIES ACCESS ROAD BRIDGE, BEAM DETAILS
V1–196	MSSU0913	GUIDEWAY, TAXIWAYS 'U' & 'V' UNDERCROSSING, TAXIWAY 'V' & FACILITIES ACCESS BRIDGE, DECK PLAN
V1–197	MSSU0914	GUIDEWAY, TAXIWAYS 'U' & 'V' UNDERCROSSING, TAXIWAY 'U', DECK PLAN
V1–198	MSSU0920	GUIDEWAY, TAXIWAYS 'U' & 'V' UNDERCROSSING, ADOT STANDARD DETAIL SD1.01, 32" CONCRETE BARRIER
V1–199	MSSU0921	GUIDEWAY, TAXIWAYS 'U' & 'V' UNDERCROSSING, ADOT STANDARD DETAIL SD2.01, APPROACH SLABS

RETAINING WALLS - STRUCTURAL

V1–200	MSSW0700	GUIDEWAY, RETAINING WALLS, GENERAL STRUCTURAL NOTES
V1–201	MSSW0701	GUIDEWAY, RETAINING WALL W1, PLAN AND ELEVATION 1, STA 31+64.84 TO 33+30.00
V1–202	MSSW0702	GUIDEWAY, RETAINING WALL W1, PLAN AND ELEVATION 2, STA 33+00.00 TO 34+64.89
V1–203	MSSW0703	GUIDEWAY, ELEVATED ALIGNMENT, RETAINING WALL W2, PLAN AND ELEVATION 1, STA 31+64.84 TO 33+30.00
V1–204	MSSW0704	GUIDEWAY, ELEVATED ALIGNMENT, RETAINING WALL W2, PLAN AND ELEVATION 2, STA 33+30.00 TO 34+64.89
V1–205	MSSW0705	GUIDEWAY, RETAINING WALL W3, PLAN AND ELEVATION 1, STA 48+00.00 TO STA 49+78.20
V1–206	MSSW0706	GUIDEWAY, RETAINING WALL W3, PLAN AND ELEVATION 2, STA 46 + 18.20 TO STA 48+00.00
V1–207	MSSW0707	GUIDEWAY, RETAINING WALL W4, PLAN AND ELEVATION 1, STA 48+00.000 TO STA 49+78.20
V1–208	MSSW0708	GUIDEWAY, RETAINING WALL W4, PLAN AND ELEVATION 2, STA 46+18.20 TO STA 48+00.00
V1–209	MSSW0709	GUIDEWAY, RETAINING WALL W5, PLAN AND ELEVATION 1, STA 72+61.35 TO STA 74+25.00
V1–210	MSSW0710	GUIDEWAY, RETAINING WALL W5, PLAN AND ELEVATION 2, STA 74+25.00 TO STA75+01.36
V1–211	MSSW0711	GUIDEWAY, RETAINING WALL W6, PLAN AND ELEVATION 1, STA 72+61.36 TO STA 74+25.00
V1–212	MSSW0712	GUIDEWAY, RETAINING WALL W6, PLAN AND ELEVATION 2, STA 74+25.00 TO STA 75+01.36
V1–213	MSSW0713	GUIDEWAY, RETAINING WALL W7, PLAN AND ELEVATION 1, STA 88+00.44 TO STA 86+50.00
V1–214	MSSW0714	GUIDEWAY, RETAINING WALL W7, PLAN AND ELEVATION 2, STA 86+50.00 TO STA 86+08.46
V1–215	MSSW0715	GUIDEWAY, RETAINING WALL W8, PLAN AND ELEVATION 1, STA 88+00.46 TO STA 86+50.00
V1–216	MSSW0716	GUIDEWAY, RETAINING WALL W8, PLAN AND ELEVATION 2, STA 86+08.46 TO STA 86+50.00
V1–217	MSSW0729	GUIDEWAY, ELEVATED GUIDEWAY, RETAINING WALL TYPICAL SECTION, WALL W1, W2, W3, W4, W5, W6, W7, W8
V1–218	MSSW0750	GUIDEWAY, RETAINING WALL W17, PLAN AND ELEVATION, STA. 2+68 TO STA 4+50
V1–219	MSSW0751	GUIDEWAY, RETAINING WALL W17, PLAN AND ELEVATION, STA. 4+50 TO STA. 6+20
V1–220	MSSW0752	GUIDEWAY, RETAINING WALL W17, PLAN AND ELEVATION, STA. 6+20 TO STA. 7+50
V1–221	MSSW0753	GUIDEWAY, RETAINING WALL W17, PLAN AND ELEVATION, STA. 7+50 TO STA. 9+00
V1–222	MSSW0754	GUIDEWAY, RETAINING WALL W17, PLAN AND ELEVATION, STA. 9+00 TO STA. 10+50
V1–223	MSSW0755	GUIDEWAY, RETAINING WALL W17, PLAN AND ELEVATION, STA. 10+50 TO STA. 12+00
V1–224	MSSW0756	GUIDEWAY, RETAINING WALL W17, PLAN AND ELEVATION, STA. 12+00 TO STA. 13+50
V1–225	MSSW0757	GUIDEWAY, RETAINING WALL W17, PLAN AND ELEVATION, STA. 13+50 TO STA. 14+80
V1–226	MSSW0758	GUIDEWAY, RETAINING WALL W17, RETAINING WALL DETAILS
V1–227	MSSW0759	GUIDEWAY, RETAINING WALL W17, RETAINING WALL DETAILS

RCC STATION - STRUCTURAL DEMO

V1–228	RBSB0101	RCC STATION, STRUCTURAL, VISITOR PARKING LEVEL DEMO PLAN
V1–229	RBSB0102	RCC STATION, STRUCTURAL, GUIDEWAY DEMO PLAN
V1–230	RBSB0103	RCC STATION, STRUCTURAL, PLATFORM DEMO PLAN
V1–231	RBSB0121	RCC STATION, STRUCTURAL, FULL SECTIONS
V1–232	RBSB0122	RCC STATION, STRUCTURAL, FULL SECTIONS
V1–233	RBSB0132	RCC STATION, STRUCTURAL, DEMO SECTIONS AND DETAILS
V1–234	RBSB0133	RCC STATION, STRUCTURAL, DEMO SECTIONS AND DETAILS

SKY HARBOR CIRCLE

V1–235	SHCV1201	CIVIL, SKY HARBOR CIRCLE, TYPICAL SECTIONS
V1–236	SHCV1202	CIVIL, SKY HARBOR CIRCLE, TYPICAL SECTIONS
V1–237	SHCV1301	CIVIL, SKY HARBOR CIRCLE, PAVING PLAN AND PROFILE
V1–238	SHCV1302	CIVIL, SKY HARBOR CIRCLE, PAVING PLAN AND PROFILE
V1–239	SHCV1303	CIVIL, SKY HARBOR CIRCLE, PAVING PLAN AND PROFILE
V1–240	SHCV1304	CIVIL, SKY HARBOR CIRCLE, PAVING PLAN AND PROFILE
V1–241	SHCV1305	CIVIL, SKY HARBOR CIRCLE, DRIVEWAY PLAN AND PROFILE
V1–242	SHCV1306	CIVIL, SKY HARBOR CIRCLE, DRIVEWAY PLAN AND PROFILE
V1–243	SHCV1307	CIVIL, SKY HARBOR CIRCLE, DRIVEWAY PLAN AND PROFILE
V1–244	SHCV0801	CIVIL, SKY HARBOR CIRCLE, MARKING AND SIGNAGE PLAN
V1–245	SHCV0802	CIVIL, SKY HARBOR CIRCLE, MARKING AND SIGNAGE PLAN
V1–246	SHCV0803	CIVIL, SKY HARBOR CIRCLE, MARKING AND SIGNAGE PLAN
V1–247	SHCV0804	CIVIL, SKY HARBOR CIRCLE, MARKING AND SIGNAGE PLAN

SKY HARBOR CIRCLE - TRAFFIC SIGNAL

V1–248	MSCV1207	CIVIL, SKY HARBOR CIRCLE, TRAFFIC SIGNAL PLANS, RENTAL CAR EXIT AND, SKY HARBOR CIRCLE SOUTH
V1–249	MSCV1208	CIVIL, SKY HARBOR CIRCLE, TRAFFIC SIGNAL PLANS, RENTAL CAR EXIT AND, SKY HARBOR CIRCLE SOUTH
V1–250	MSCV1209	CIVIL, SKY HARBOR CIRCLE, TRAFFIC SIGNAL PLANS, RENTAL CAR EXIT AND, SKY HARBOR CIRCLE SOUTH

SKY HARBOR CIRCLE - LIGHTING PLANS

V1–251	SHEL0201	CIVIL, SKY HARBOR CIRCLE, OVERALL ROADWAY, LIGHTING PLAN
V1–252	SHEL0202	CIVIL, SKY HARBOR CIRCLE, ROADWAY LIGHTING PLAN, STA 13+00 TO STA 17+00
V1–253	SHEL0203	CIVIL, SKY HARBOR CIRCLE, ROADWAY LIGHTING PLAN, STA 17+00 TO STA 22+00
V1–254	SHEL0204	CIVIL, SKY HARBOR CIRCLE, ROADWAY LIGHTING PLAN, STA 22+00 TO STA 27+00
V1–255	SHEL0205	CIVIL, SKY HARBOR CIRCLE, ROADWAY LIGHTING PLAN, STA 27+00 TO STA 31+00
V1–256	SHEL0206	CIVIL, SKY HARBOR CIRCLE, ROADWAY LIGHTING PLAN, STA 31+00 TO STA 34+96
V1–257	SHEL1001	CIVIL, SKY HARBOR CIRCLE, ROADWAY LIGHTING DETAILS
V1–258	SHEL1002	CIVIL, SKY HARBOR CIRCLE, ROADWAY LIGHTING DETAILS

24TH STREET AREA - SUBSTATION ACCESS ROADWAYS

V1–259	TSCV0201	CIVIL, 24TH STREET ACCESS ROAD, SUBSTATION ACCESS ROADWAYS, IMPROVEMENT PLAN
V1–260	TSCV0202	CIVIL, 24TH STREET ACCESS ROAD, SUBSTATION ACCESS ROADWAYS, IMPROVEMENT PLAN
V1–261	TSCV0203	CIVIL, 24TH STREET ACCESS ROAD, SUBSTATION ACCESS ROADWAYS, IMPROVEMENT PLAN
V1–262	TSCV0204	CIVIL, 24TH STREET ACCESS ROAD, SUBSTATION ACCESS ROADWAYS, IMPROVEMENT PLAN
V1–263	TSCV1201	CIVIL, 24TH STREET ACCESS ROAD, SUBSTATION ACCESS ROADWAYS, TYPICAL SECTIONS AND DETAILS
V1–264	TSCV0601	CIVIL, 24TH STREET ACCESS ROAD, SUBSTATION ACCESS ROADWAYS, SIDEWALK LAYOUT PLAN
V1–265	TSCV0501	CIVIL, 24TH STREET ACCESS ROAD, SUBSTATION ACCESS ROADWAYS, GRADING & DRAINAGE
V1–266	TSCV0502	CIVIL, 24TH STREET ACCESS ROAD, SUBSTATION ACCESS ROADWAYS, DEMOLITION AND, GRADING AND DRAINAGE PLAN
V1–267	TSCV0503	CIVIL, 24TH STREET ACCESS ROAD, SUBSTATION ACCESS ROADWAYS, DEMOLITION AND, GRADING AND DRAINAGE PLAN
V1–268	TSCV0504	CIVIL, 24TH STREET ACCESS ROAD, SUBSTATION ACCESS ROADWAYS, DEMOLITION AND, GRADING AND DRAINAGE PLAN
V1–269	TSCV0505	CIVIL, 24TH STREET ACCESS ROAD, SUBSTATION ACCESS ROADWAYS, DEMOLITION AND, GRADING AND DRAINAGE PLAN
V1–270	TSCV0506	CIVIL, 24TH STREET ACCESS ROAD, SUBSTATION ACCESS ROADWAYS, DEMOLITION AND, GRADING AND DRAINAGE PLAN
V1–271	TSCV0507	CIVIL, 24TH STREET ACCESS ROAD, SUBSTATION ACCESS ROADWAYS, DEMOLITION AND, GRADING AND DRAINAGE PLAN
V1–272	TSCV0508	CIVIL, 24TH STREET ACCESS ROAD, SUBSTATION ACCESS ROADWAYS, STAKING TABLE
V1–273	TSCV0509	CIVIL, 24TH STREET ACCESS ROAD, SUBSTATION ACCESS ROADWAYS, STAKING TABLE
V1–274	TSCV0510	CIVIL, 24TH STREET ACCESS ROAD, SUBSTATION ACCESS ROADWAYS, STAKING TABLE
V1–275	TSCV0801	CIVIL, 24TH STREET ACCESS ROAD, SUBSTATION ACCESS ROADWAYS, PAVEMENT MARKING AND, SIGNAGE PLAN
V1–276	TSCV0802	CIVIL, 24TH STREET ACCESS ROAD, SUBSTATION ACCESS ROADWAYS, PAVEMENT MARKING AND, SIGNAGE PLAN
V1–277	TSCV0803	CIVIL, 24TH STREET ACCESS ROAD, SUBSTATION ACCESS ROADWAYS, PAVEMENT MARKING AND, SIGNAGE PLAN
V1–278	SHCV1308	CIVIL, 24TH STREET ACCESS ROAD, SUBSTATION ACCESS ROADWAYS, FENCING PLAN
V1–279	SHCV1309	CIVIL, 24TH STREET ACCESS ROAD, SUBSTATION ACCESS ROADWAYS, FENCING PLAN
V1–280	SHCV1310	CIVIL, 24TH STREET ACCESS ROAD, SUBSTATION ACCESS ROADWAYS, FENCING PLAN
V1–281	SHCV1207	CIVIL, 24TH STREET ACCESS ROAD, SUBSTATION ACCESS ROADWAYS
V1–282	SHCV1208	CIVIL, 24TH STREET ACCESS ROAD, SUBSTATION ACCESS ROADWAYS

24TH STREET STATION - SITE - FACILITIES PARKING LOT

V1–283	TSEL0201	CIVIL, 24TH STREET STATION–SITE, FACILITIES PARKING LOT, OVERALL LIGHTING DEMOLITION
V1–284	TSEL0202	CIVIL, 24TH STREET STATION–SITE, FACILITIES PARKING LOT, LIGHTING DEMOLITION PLAN
V1–285	TSEL0203	CIVIL, 24TH STREET STATION–SITE, FACILITIES PARKING LOT, LIGHTING DEMOLITION PLAN
V1–286	TSEL0204	CIVIL, 24TH STREET STATION–SITE, FACILITIES PARKING LOT, OVERALL LIGHTING PLAN
V1–287	TSEL0205	CIVIL, 24TH STREET STATION–SITE, FACILITIES PARKING LOT, LIGHTING LAYOUT
V1–288	TSEL0206	CIVIL, 24TH STREET STATION–SITE, FACILITIES PARKING LOT, LIGHTING LAYOUT
V1–289	TSEL1001	CIVIL, 24TH STREET STATION–SITE, FACILITIES PARKING LOT, LIGHTING DETAILS
V1–290	TSEL1002	CIVIL, 24TH STREET STATION–SITE, FACILITIES PARKING LOT, SINGLE LINE DIAGRAM

WEST TERMINAL AREA - CIVIL IMPROVEMENTS

V1–291	WSCV0101	CIVIL, WEST TERMINAL – SITE, DEMOLITION PLAN, AIR CARGO SITE
V1–292	WSCV0102	CIVIL, WEST TERMINAL – SITE, DEMOLITION PLAN, AIR CARGO SITE
V1–293	WSCV1301	CIVIL, WEST TERMINAL – SITE, CIVIL IMPROVEMENT PLAN, U&V CROSSING ROAD
V1–294	WSCV1302	CIVIL, WEST TERMINAL – SITE, CIVIL IMPROVEMENT PLAN, U&V CROSSING ROAD
V1–295	WSCV1303	CIVIL, WEST TERMINAL – SITE, CIVIL IMPROVEMENT PLAN, U&V CROSSING ROAD
V1–296	WSCV1304	CIVIL, WEST TERMINAL – SITE, CIVIL IMPROVEMENT PLAN, AIR CARGO SITE
V1–297	WSCV1305	CIVIL, WEST TERMINAL – SITE, CIVIL IMPROVEMENT PLAN, AIR CARGO SITE
V1–298	WSCV1306	CIVIL, WEST TERMINAL – SITE, CIVIL IMPROVEMENT PLAN, AIR CARGO SITE
V1–299	WSCV1307	CIVIL, WEST TERMINAL – SITE, CIVIL IMPROVEMENT PLAN, BUCKEYE ROAD/WEST ECONOMY LOT
V1–300	WSCV0201	CIVIL, WEST TERMINAL – SITE, GEOMETRIC LAYOUT PLAN, BUCKEYE ROAD/ WEST ECONOMY LOT
V1–301	WSCV1101	CIVIL, WEST TERMINAL – SITE, PLAN AND PROFILE, U&V CROSSING ROAD
V1–302	WSCV1102	CIVIL, WEST TERMINAL – SITE, PLAN AND PROFILE, U&V CROSSING ROAD
V1–303	WSCV1103	CIVIL, WEST TERMINAL – SITE, PLAN AND PROFILE, AIR CARGO SITE
V1–304	WSCV0501	CIVIL, WEST TERMINAL – SITE, GRADING AND DRAINAGE PLAN, U&V CROSSING ROAD
V1–305	WSCV0502	CIVIL, WEST TERMINAL – SITE, GRADING AND DRAINAGE PLAN, U&V CROSSING ROAD
V1–306	WSCV0503	CIVIL, WEST TERMINAL – SITE, GRADING AND DRAINAGE PLAN, AIR CARGO SITE
V1–307	WSCV0504	CIVIL, WEST TERMINAL – SITE, GRADING AND DRAINAGE PLAN, AIR CARGO SITE
V1–308	WSCV0505	CIVIL, WEST TERMINAL – SITE, GRADING AND DRAINAGE PLAN, AIR CARGO SITE
V1–309	WSCV0506	CIVIL, WEST TERMINAL – SITE, GRADING AND DRAINAGE PLAN, AIR CARGO SITE
V1–310	WSCV0507	CIVIL, WEST TERMINAL – SITE, GRADING AND DRAINAGE PLAN, AIR CARGO SITE
V1–311	WSCV0508	CIVIL, WEST TERMINAL – SITE, GRADING AND DRAINAGE PLAN, AIR CARGO SITE
V1–312	WSCV0509	CIVIL, WEST TERMINAL – SITE, GRADING AND DRAINAGE PLAN, AIR CARGO SITE
V1–313	WSCV0510	CIVIL, WEST TERMINAL – SITE, GRADING AND DRAINAGE PLAN, AIR CARGO SITE
V1–314	WSCV0511	CIVIL, WEST TERMINAL – SITE, GRADING AND DRAINAGE PLAN, BUCKEYE ROAD/ WEST ECONOMY LOT
V1–315	WSCV0512	CIVIL, WEST TERMINAL – SITE, GRADING AND DRAINAGE PLAN, BUCKEYE ROAD/WEST ECONOMY LOT
V1–316	WSCV0513	CIVIL, WEST TERMINAL – SITE, GRADING AND DRAINAGE DETAIL PLAN, BUCKEYE ROAD / WEST ECONOMY LOT
V1–317	WSCV0901	CIVIL, WEST TERMINAL – SITE, STORM DRAIN PLAN AND PROFILE, LIFT STATION
V1–318	WSCV0902	CIVIL, WEST TERMINAL – SITE, STORM DRAIN PLAN AND PROFILE, LIFT STATION
V1–319	WSCV0903	CIVIL, WEST TERMINAL – SITE, STORM DRAIN, PLAN AND PROFILE
V1–320	WSCV0904	CIVIL, WEST TERMINAL – SITE, STORM DRAIN, PLAN AND PROFILE, WEST ECONOMY LOT
V1–321	WSCV0801	CIVIL, WEST TERMINAL – SITE, PAVEMENT MARKING AND SIGNAGE PLAN, AIR CARGO SITE
V1–322	WSCV0802	CIVIL, WEST TERMINAL – SITE, PAVEMENT MARKING AND SIGNAGE PLAN, AIR CARGO SITE
V1–323	WSCV0803	CIVIL, WEST TERMINAL – SITE, PAVEMENT MARKING, AND SIGNAGE PLAN, BUCKEYE ROAD /WEST ECONOMY LOT
V1–324	WSCV1205	CIVIL, WEST TERMINAL – SITE, PAVEMENT MARKING, AND SIGNAGE, DETAILS
V1–325	WSCV1206	CIVIL, WEST TERMINAL – SITE, TYPICAL SECTIONS
V1–326	WSCV1207	CIVIL, WEST TERMINAL – SITE, PROJECT DETAILS
V1–327	WSCV1208	CIVIL, WEST TERMINAL – SITE, PROJECT DETAILS
V1–328	WSCV1209	CIVIL, WEST TERMINAL – SITE, PROJECT DETAILS, STORM DRAIN LIFT STATION
V1–329	WSCV1210	CIVIL, WEST TERMINAL – SITE, PROJECT DETAILS, STORM DRAIN LIFT STATION
V1–330	WSCV1211	CIVIL, WEST TERMINAL – SITE, PROJECT DETAILS, STORM DRAIN LIFT STATION
V1–331	WSCV1212	CIVIL, WEST TERMINAL – SITE, PROJECT DETAILS, STORM DRAIN LIFT STATION
V1–332	WSCV1213	CIVIL, WEST TERMINAL – SITE, PROJECT DETAILS, STORM DRAIN LIFT STATION
V1–333	WSCV1214	CIVIL, WEST TERMINAL – SITE, PROJECT DETAILS, STORM DRAIN LIFT STATION
V1–334	WSCV1215	CIVIL, WEST TERMINAL – SITE, PROJECT DETAILS, STORM DRAIN LIFT STATION
V1–335	WSCV1216	CIVIL, WEST TERMINAL – SITE, PROJECT DETAILS, STORM DRAIN LIFT STATION

WEST TERMINAL AREA - ELECTRICAL AND COMM

V1–336	WSEL0001	WEST TERMINAL STATION, ELECTRICAL, GENERAL NOTES, LIFT STATION PLAN
V1–337	WSEL0002	WEST TERMINAL STATION, ELECTRICAL AND COMMUNICATIONS, SYMBOLS LIST, LIFT STATION PLAN
V1–338	WSEL0204	WEST TERMINAL STATION, ELECTRICAL AND COMMUNICATIONS, SITE PLAN, LIFT STATION PLAN
V1–339	WSEL0901	WEST TERMINAL STATION, ELECTRICAL, PANEL SCHEDULE, LIFT STATION DETAILS

PER CITY OF PHOENIX ORDINANCE G-4390, THESE PLANS ARE FOR OFFICIAL USE ONLY AND MAY NOT BE SHARED WITH OTHERS EXCEPT AS REQUIRED TO FULFILL THE OBLIGATIONS OF YOUR CONTRACT WITH THE CITY OF PHOENIX.

NO.	REVISIONS / SUBMISSIONS	DATE
	ISSUED FOR CONSTRUCTION	04/13/18
	SUBMITTED FOR REVIEW	02/02/18

Design Sub-Consultant

Design Consultant
Gannett Fleming

PHX SKY TRAIN
STAGE 2 DESIGN
500 S. 24TH STREET
PHOENIX, AZ 85034

PHX SKY TRAIN
CITY OF PHOENIX AVIATION DEPARTMENT

STAGE 2 – B03 DESIGN SUBMISSION

GENERAL PLANS
INDEX OF DRAWINGS - 2

Designed by: MB
Drawn by: JV
Checked by: MD
Date: 04/13/2018
Dwg scale: NTS
CIP No.: AV10000011
KIVA No.: 07–5204

Package: B03
Sheet Reference No: MSGN0002
V1 - 003 of 339

PLOT DATE: Apr 13, 2018 FILE PATH: C:\pwworking\gfpw01\mbiggs\d0667700\AV10000011-S-2-MSGNB031.dwg mbiggs

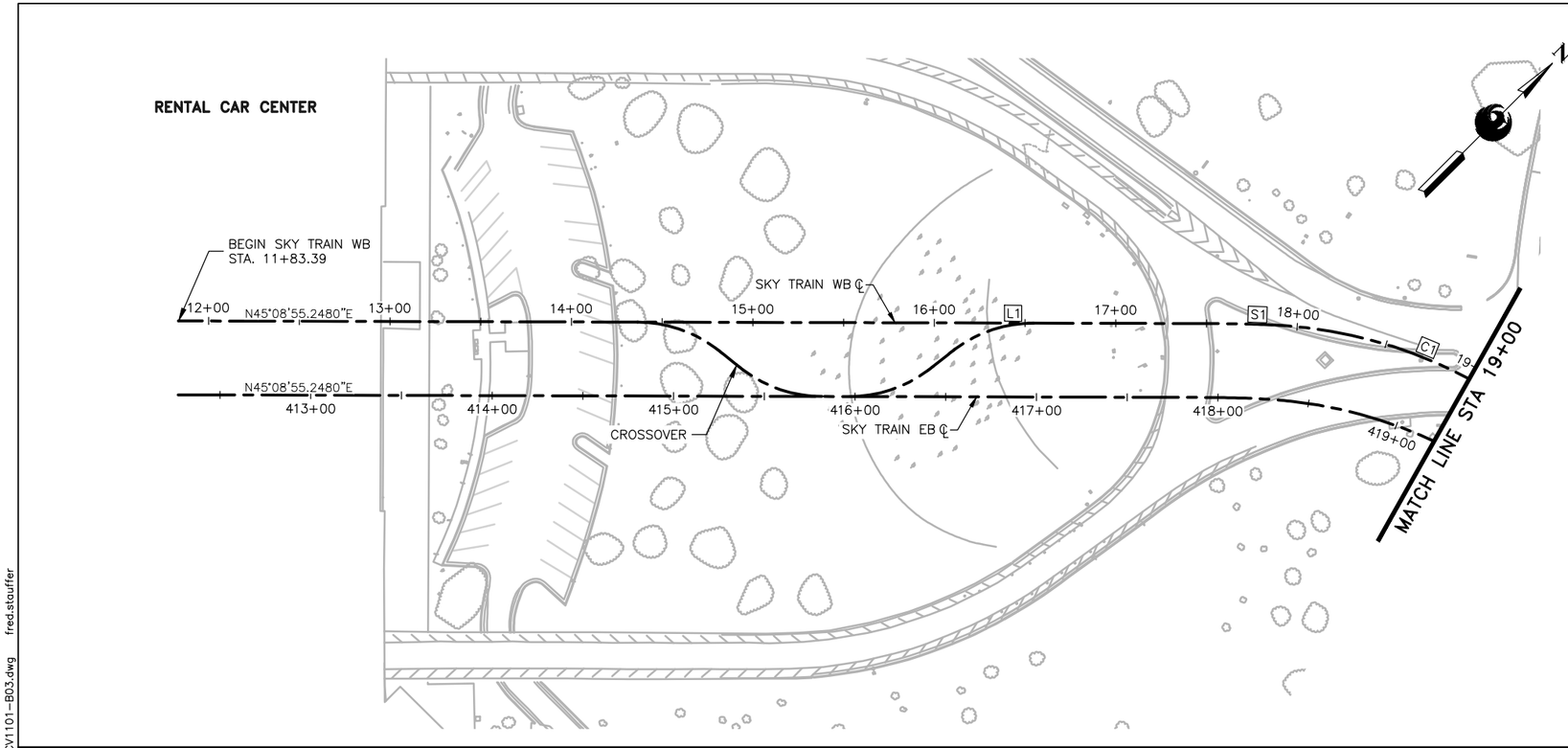

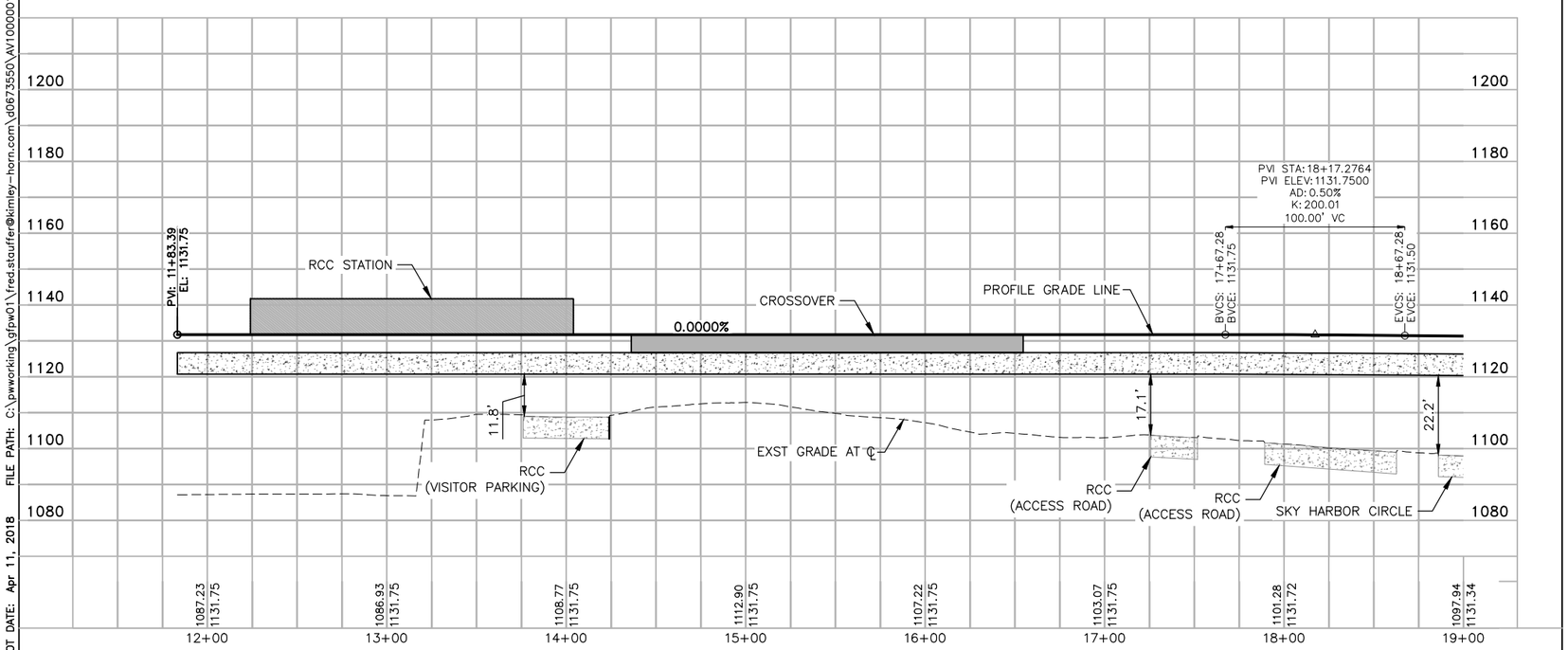

GENERAL NOTES

1. EXISTING UTILITIES ARE SHOWN IN APPROXIMATE LOCATIONS ONLY. CONTRACTOR SHALL VERIFY EXACT LOCATIONS OF ALL UNDERGROUND UTILITIES PRIOR TO COMMENCING WORK IN ANY AREA.
2. PROFILE GRADE LINE (PGL) ELEVATIONS CORRESPOND TO THE STATION PLATFORM FINISH FLOOR ELEVATION, OR 5' ABOVE GUIDEWAY STRUCTURE OUTSIDE OF THE STATION AREAS. REFER TO SHEETS MSCV1101 OR MSCV1116 FOR DETAIL.

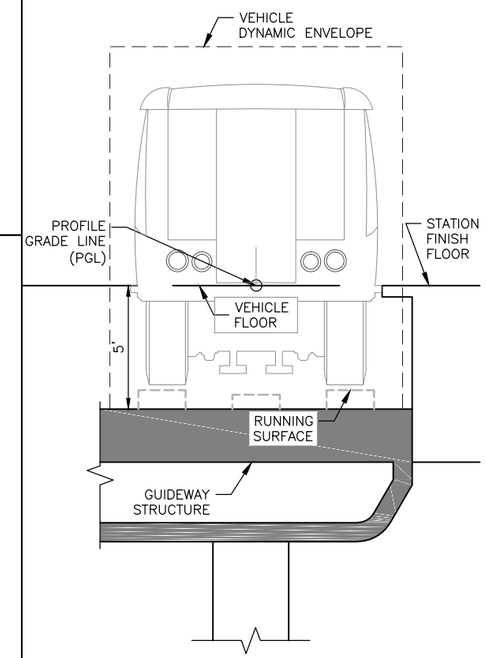

PROFILE GRADE LINE DETAIL
N.T.S

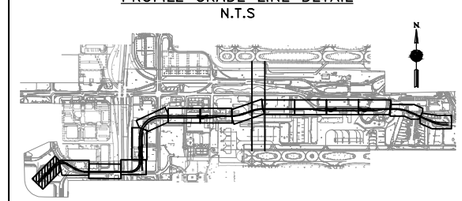

KEYMAP
N.T.S

HORIZONTAL SCALE IN FEET
0 40 80
VERTICAL SCALE IN FEET
0 20 40

Registered Professional Engineer (Civil)
CERTIFICATE NO. 37721
NATHAN C. WALNUM
Date Signed 04/13/18
ARIZONA U.S.A.
Expires 6/30/20

Design Sub-Consultant
Kimley»Horn

Design Consultant
Gannett Fleming

PER CITY OF PHOENIX ORDINANCE G-4398, THESE PLANS ARE FOR OFFICIAL USE ONLY AND MAY NOT BE SHARED WITH OTHERS EXCEPT AS REQUIRED TO FULFILL THE OBLIGATIONS OF YOUR CONTRACT WITH THE CITY OF PHOENIX.

NO.	REVISIONS / SUBMISSIONS	DATE
	ISSUED FOR CONSTRUCTION	04/13/18
	SUBMITTED FOR REVIEW	02/02/18

PHX SKY TRAIN
CITY OF PHOENIX AVIATION DEPARTMENT

PHX SKY TRAIN
STAGE 2 DESIGN
500 S. 24TH STREET
PHOENIX, AZ 85034

Designed by: FAS
Drawn by: FAS
Checked by: NCW
Date: 04/13/2018
Dwg scale: 1"=40'
CIP No.: AV10000011
KIVA No.: 07-5204

STAGE 2 – B03 DESIGN SUBMISSION

GUIDEWAY
PLAN & PROFILE
WB ALIGNMENT
STA. 11+83.39 TO STA. 19+00

Package: Sheet Reference No:
B03 - MSCV1101
V1 - 008 of 339

PLOT DATE: Apr 11, 2018 FILE PATH: C:\pwworking\gfpw01\fred.stauffer@kimley-horn.com\d0673550\AV10000011-S-2-MSCV1101-B03.dwg fred.stauffer

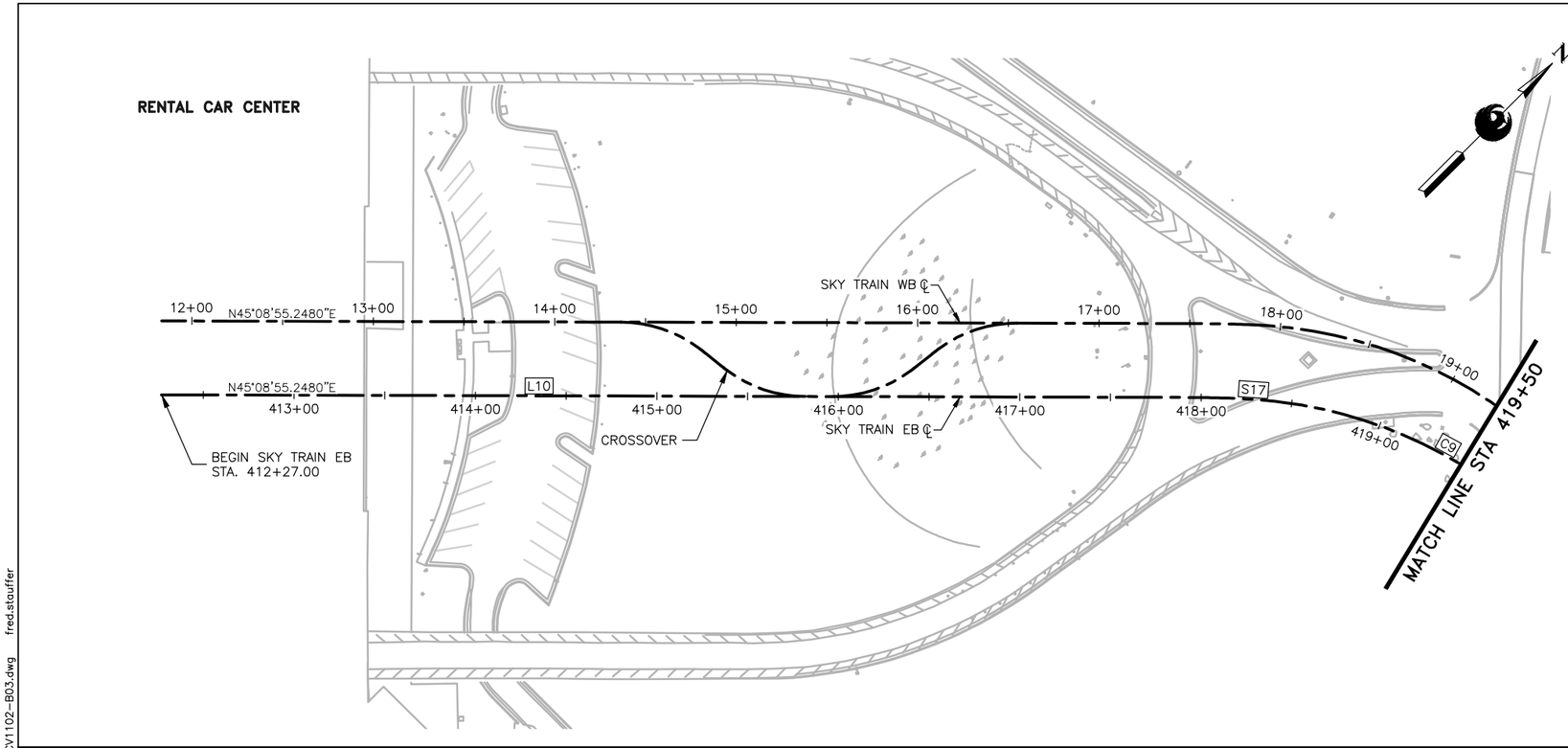

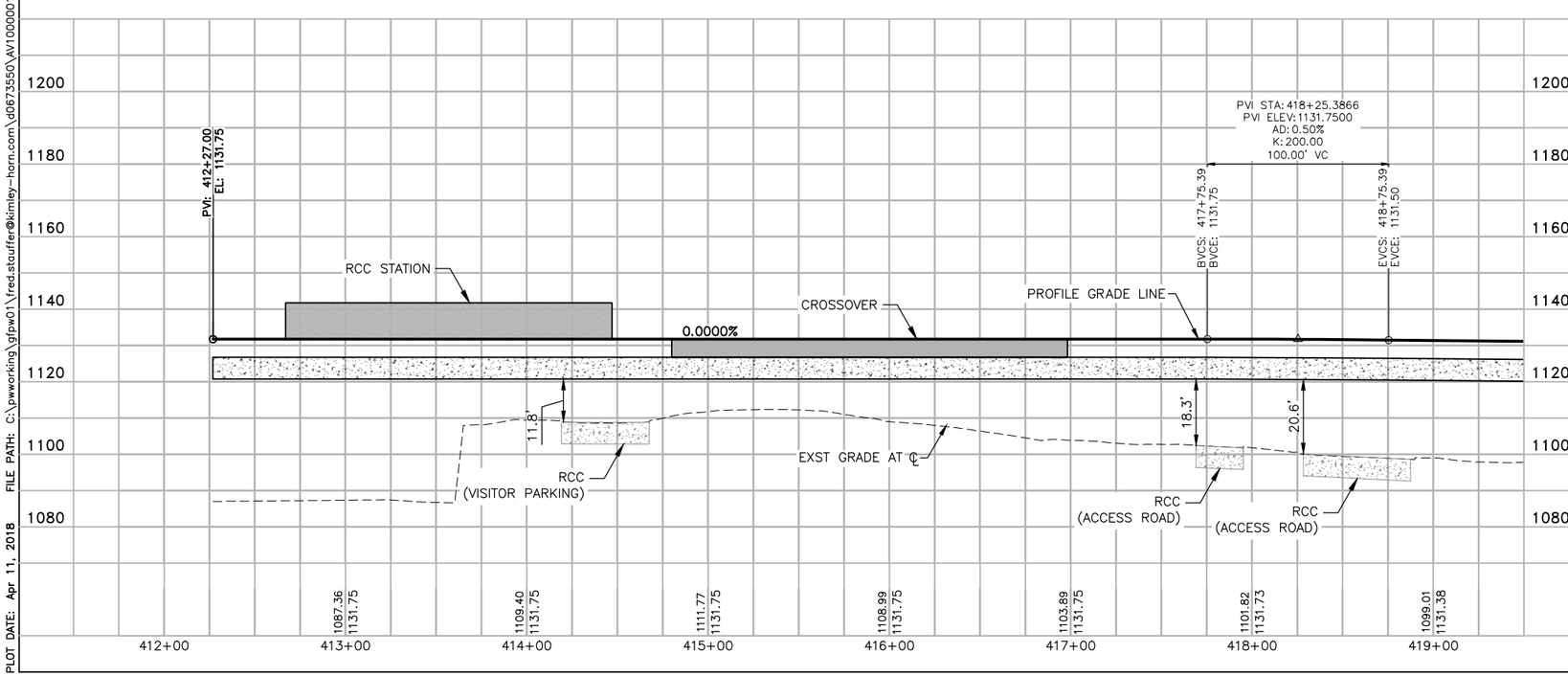

GENERAL NOTES

1. EXISTING UTILITIES ARE SHOWN IN APPROXIMATE LOCATIONS ONLY. CONTRACTOR SHALL VERIFY EXACT LOCATIONS OF ALL UNDERGROUND UTILITIES PRIOR TO COMMENCING WORK IN ANY AREA.
2. PROFILE GRADE LINE (PGL) ELEVATIONS CORRESPOND TO THE STATION PLATFORM FINISH FLOOR ELEVATION, OR 5' ABOVE GUIDEWAY STRUCTURE OUTSIDE OF THE STATION AREAS. REFER TO SHEETS MSCV1101 OR MSCV1116 FOR DETAIL.

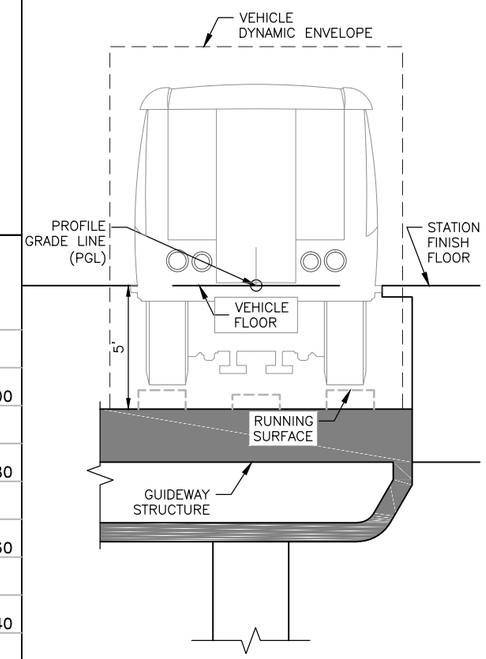

PROFILE GRADE LINE DETAIL
N.T.S

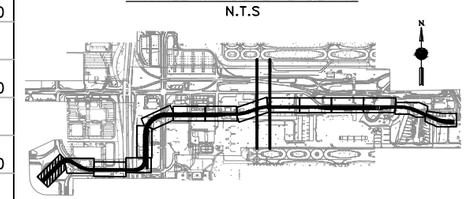

KEYMAP
N.T.S

HORIZONTAL SCALE IN FEET
0 40 80
VERTICAL SCALE IN FEET
0 40 80

Registered Professional Engineer (Civil)
CERTIFICATE NO. 37721
NATHANIEL C. WALNUM
Date Signed 04/13/18
ARIZONA, U.S.A.
Expires 6/30/20

Design Sub-Consultant
Kimley»Horn

Design Consultant
Gannett Fleming

PER CITY OF PHOENIX ORDINANCE G-4398, THESE PLANS ARE FOR OFFICIAL USE ONLY AND MAY NOT BE SHARED WITH OTHERS EXCEPT AS REQUIRED TO FULFILL THE OBLIGATIONS OF YOUR CONTRACT WITH THE CITY OF PHOENIX.

NO.	REVISIONS / SUBMISSIONS	DATE
	ISSUED FOR CONSTRUCTION	04/13/18
	SUBMITTED FOR REVIEW	02/02/18

PHX SKY TRAIN
CITY OF PHOENIX AVIATION DEPARTMENT

PHX SKY TRAIN
STAGE 2 DESIGN
500 S. 24TH STREET
PHOENIX, AZ 85034

Designed by: FAS
Drawn by: FAS
Checked by: NCW
Date: 04/13/2018
Dwg scale: 1"=40'
CIP No.: AV10000011
KIVA No.: 07-5204

STAGE 2 – B03 DESIGN SUBMISSION

GUIDEWAY
PLAN & PROFILE
EB ALIGNMENT
STA. 412+27.00 TO STA. 419+50

Package: B03
Sheet Reference No: MSCV1116
V1 - 023 of 339

PLOT DATE: Apr 11, 2018 FILE PATH: C:\pwworking\gfpw01\fred.stauffer@kimley-horn.com\d0673550\AV10000011-S-2-MSCV1102-B03.dwg fred.stauffer

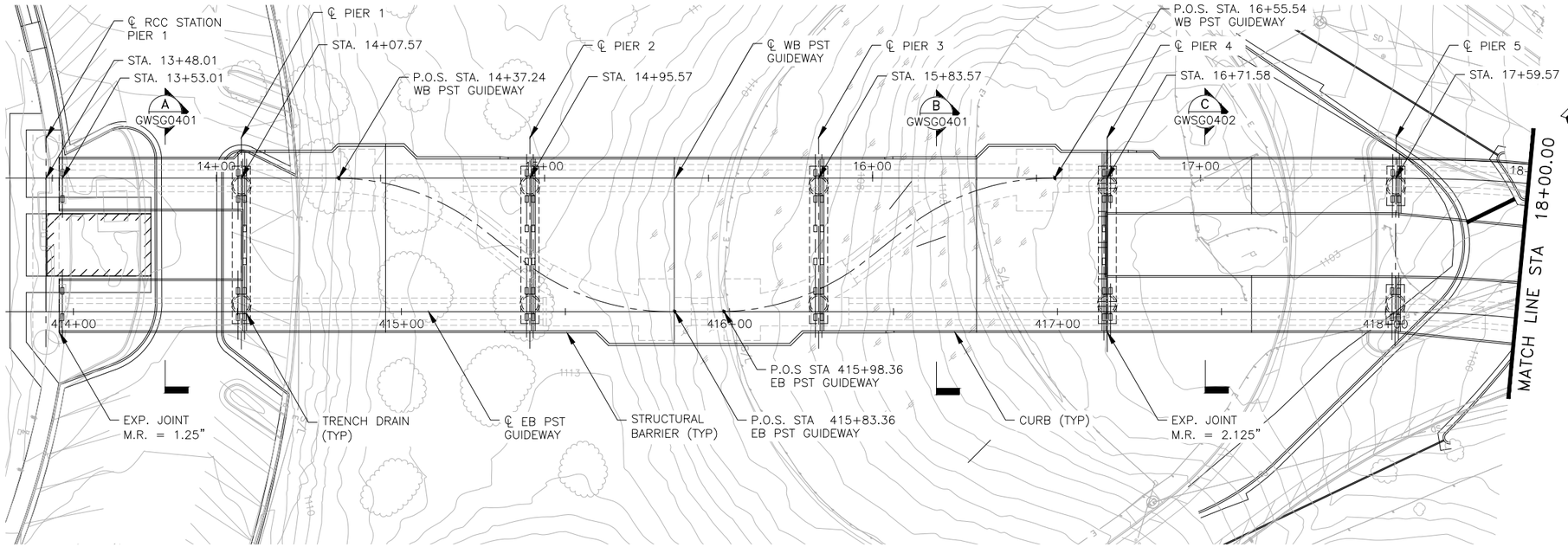

1 PLAN
SCALE: 1"=20'-0"

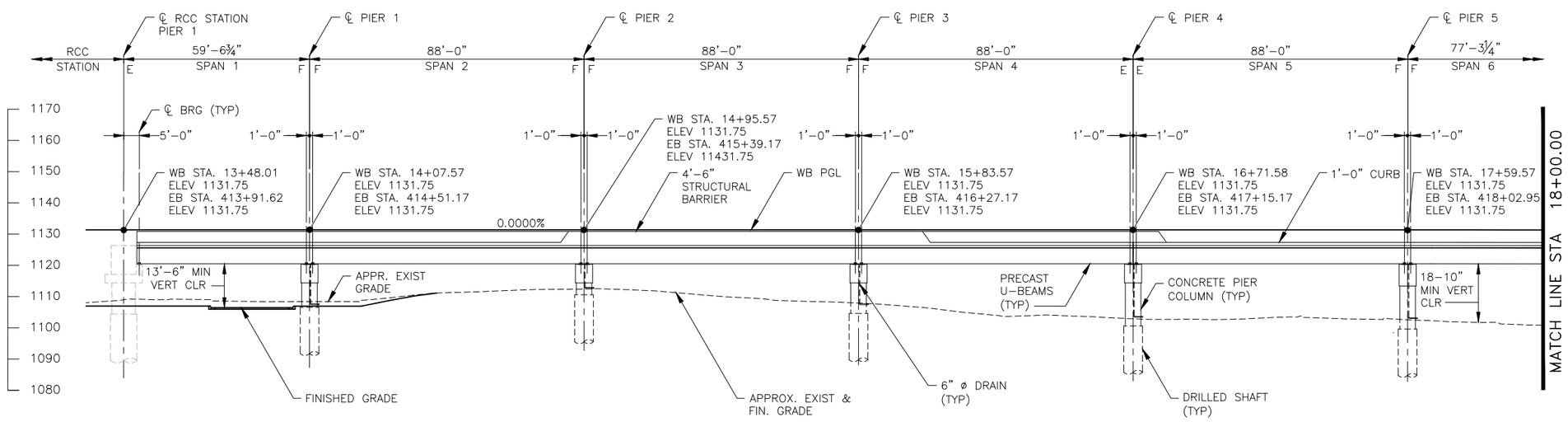

2 ELEVATION
SCALE: 1"=20'-0"

NOTES:
1. SPAN LENGTHS AND PGL ELEVATIONS ARE REPORTED AT THE INTERSECTION OF ℄ OF WB PST GUIDEWAY AND ℄ OF PIER STRUCTURE.
2. FOR ALIGNMENT DATA, SEE CIVIL PLANS.

SHEET LOCATION

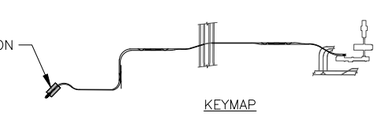

KEYMAP

HORIZONTAL SCALE IN FEET
0 20 40

Registered Professional Engineer (Civil) CERTIFICATE NO. 28174 MARK PILMALLIS Date Signed 7-13-18 ARIZONA U.S.A. EXPIRES 03/31/19

Design Consultant
Gannett Fleming

Design Sub-Consultant

PER CITY OF PHOENIX ORDINANCE G-4390, THESE PLANS ARE PROPRIETARY AND MAY NOT BE SHARED WITH OTHERS EXCEPT AS REQUIRED TO FULFILL THE OBLIGATIONS OF YOUR CONTRACT WITH THE CITY OF PHOENIX.

NO.	REVISIONS / SUBMISSIONS	DATE
	ISSUED FOR CONSTRUCTION	07/13/18
	SUBMITTED FOR REVIEW	04/06/18

PHX SKY TRAIN
CITY OF PHOENIX AVIATION DEPARTMENT

PHX SKY TRAIN STAGE 2 DESIGN
500 S. 24TH STREET PHOENIX, AZ 85034

Designed by: MH/MM
Drawn by: BAM
Checked by: SWS
Date: 07/13/2018
Dwg scale: 1"=20'
CIP No.: AV10000011
KIVA No.: 07-5204

STAGE 2 – B04 DESIGN SUBMISSION

GUIDEWAY ELEVATED ALIGNMENT PLAN AND ELEVATION STA 13+48.01 TO STA 18+00.00

Package: Sheet Reference No:
B04 - GWSG0202
V1 - 048 of 286

PLOT DATE: Jul 11, 2018 FILE PATH: C:\pwworking\gfpw01\jrojas\d0673541\AV10000011-S-2-GWSG0202.dwg jrojas

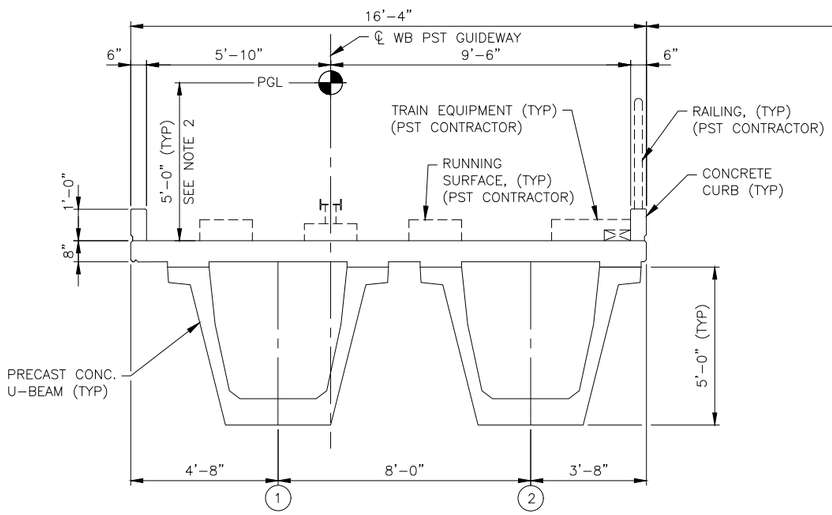

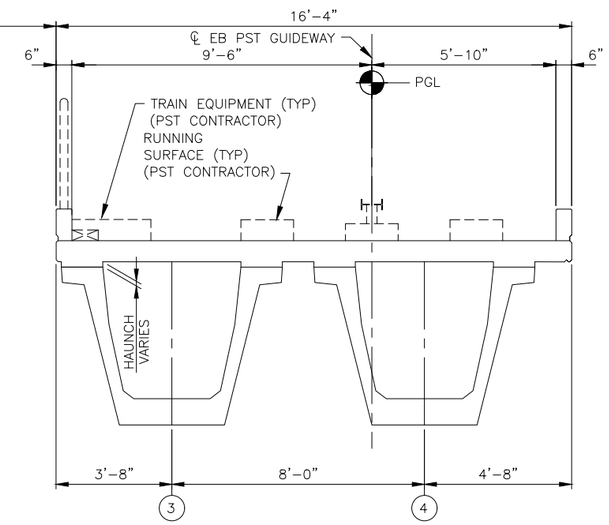

A TYPICAL SINGLE TRACK SECTION AT RCC
SCALE: 3/8"=1'-0"

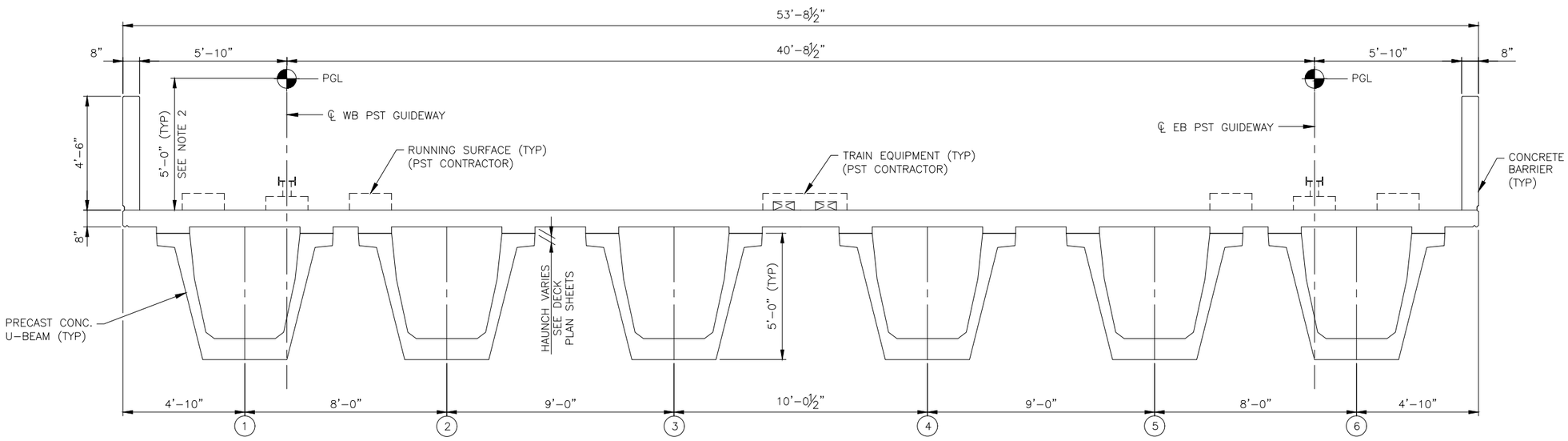

B TYPICAL CROSSOVER SECTION AT RCC
SCALE: 3/8"=1'-0"

NOTES:

1. FOR PGL ELEVATIONS AND ALIGNMENT GEOMETRY SEE CIVIL SHEETS. SEE DECK PLANS FOR DECK WIDTH.
2. PGL RELATION TO STRUCTURAL DECK IS FOR FACILITY CONSTRUCTION PURPOSES ONLY.
3. RUNNING SURFACE AND WALKWAY SHOWN ARE INDICATIVE, TO BE PROVIDED BY PST SYSTEM CONTRACTOR.
4. FOR BEAM SPACINGS, SEE FRAMING PLANS.

PER CITY OF PHOENIX ORDINANCE G-4390, THESE PLANS ARE FOR OFFICIAL USE ONLY AND MAY NOT BE SHARED WITH OTHERS EXCEPT AS REQUIRED TO FULFILL THE OBLIGATIONS OF YOUR CONTRACT WITH THE CITY OF PHOENIX.

NO.	REVISIONS / SUBMISSIONS	DATE
	ISSUED FOR CONSTRUCTION	07/13/18
	SUBMITTED FOR REVIEW	04/06/18

Design Sub-Consultant

Design Consultant
Gannett Fleming

PHX SKY TRAIN
CITY OF PHOENIX AVIATION DEPARTMENT

PHX SKY TRAIN STAGE 2 DESIGN 500 S. 24TH STREET PHOENIX, AZ 85034

Designed by: MH/NM
Drawn by: BAM
Checked by: SWS
Date: 07/13/2018
Dwg scale: 3/8"=1'-0"
CIP No.: AV10000011
KIVA No.: 07-5204

STAGE 2 – B04 DESIGN SUBMISSION

GUIDEWAY ELEVATED ALIGNMENT PRECAST U-BEAM SPANS TYPICAL SECTIONS A AND B

Package: Sheet Reference No:
B04 - GWSG0401
V1 - 065 of 286

PLOT DATE: Jul 06, 2018 FILE PATH: C:\pwworking\gfpw01\bmoore\d0673541\AV10000011-S-2-GWSG0401.dwg bmoore

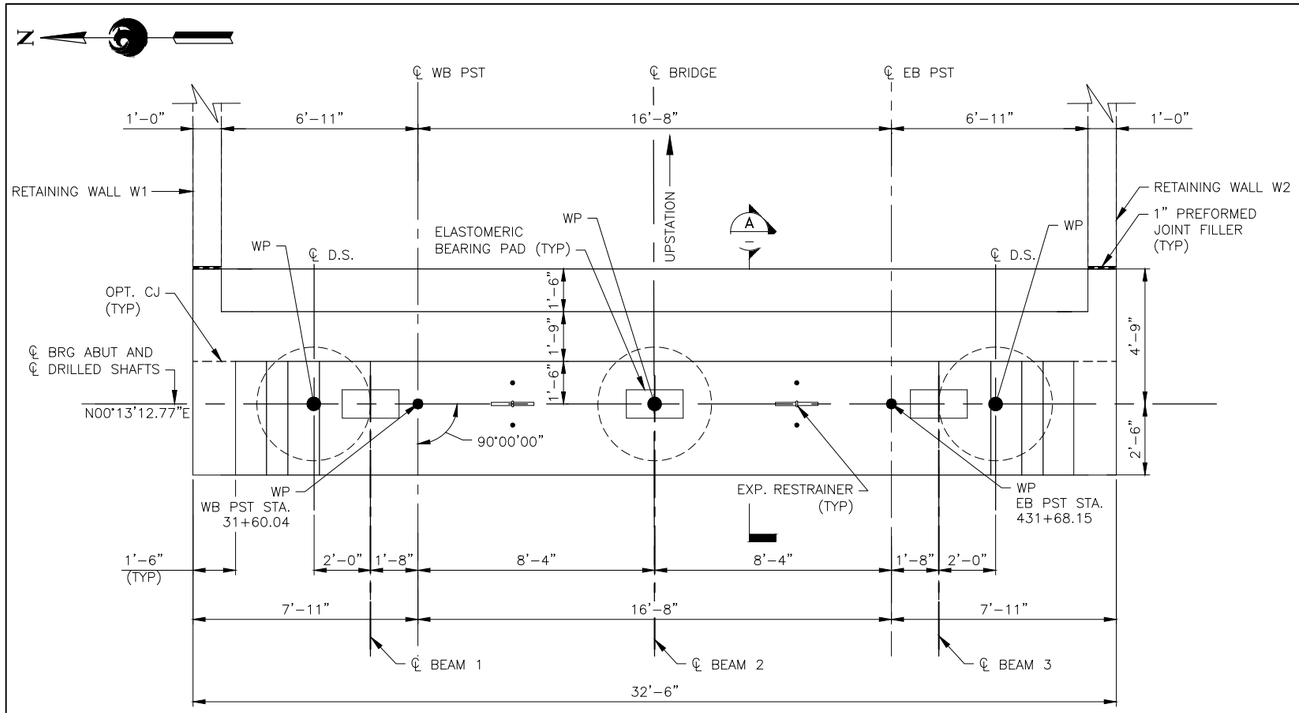

1 ABUTMENT PLAN
SCALE: 3/8" = 1'-0"

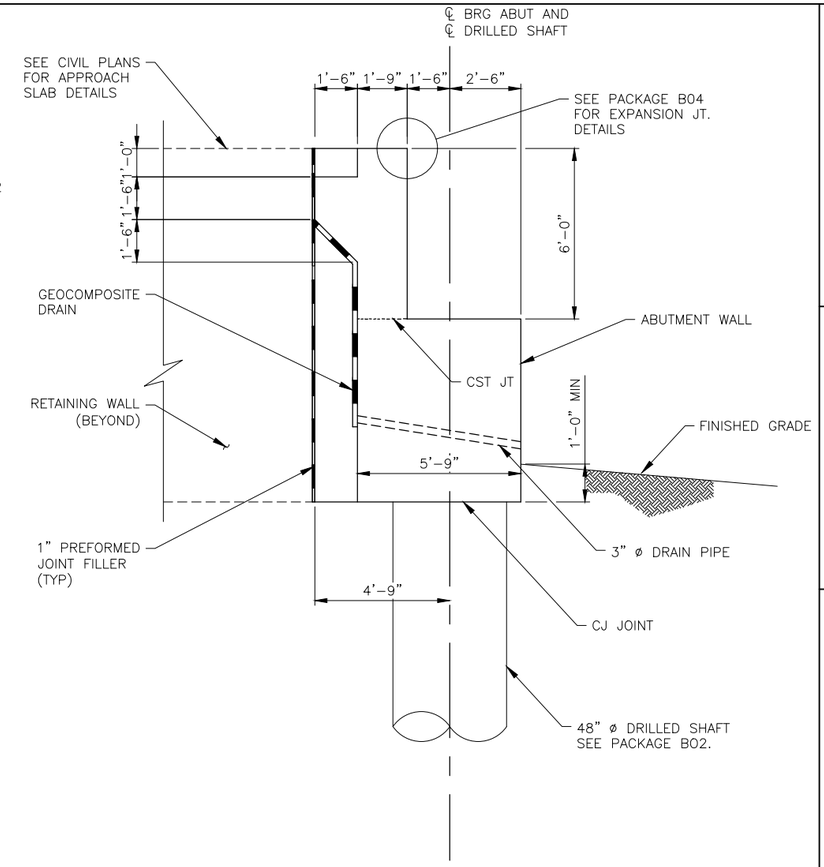

A TYPICAL ABUTMENT SECTION
SCALE: 3/8" = 1'-0"

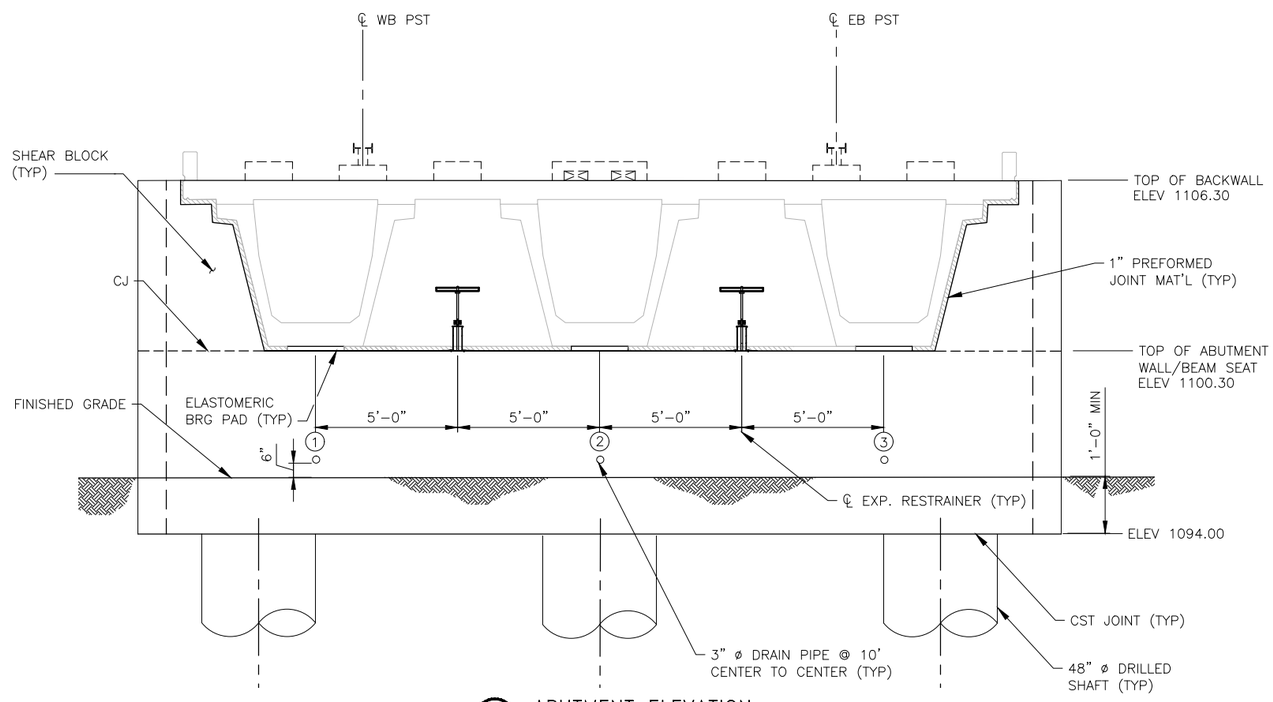

2 ABUTMENT ELEVATION
SCALE: 3/8" = 1'-0"

NOTES:

1. CONTRACTOR TO VERIFY ALL GROUND ELEVATIONS, UTILITY LOCATIONS AND EXISTING STRUCTURES BEFORE CONSTRUCTION.
2. SEE CIVIL PLANS FOR ALIGNMENT & UTILITY RELOCATION INFORMATION.
3. SEE SHEETS GWSG0610 AND GWSG0612 FOR ABUTMENT REINFORCING DETAILS.
4. SEE FRAMING PLANS IN PACKAGE B04 FOR BEAM ORIENTATIONS. SEE PACKAGE B04 FOR DETAILS OF BEARING PADS.
5. EXPANSION VERTICAL RESTRAINERS SHALL BE PROVIDED AS SHOWN. SEE SHEET GWSG0891 FOR DETAILS OF RESTRAINERS.
6. SEE SHEET GWSG0612 FOR SHEAR BLOCK DETAILS.

Registered Professional Engineer (Civil) CERTIFICATE NO. 28174 MARK PILMALLIS Date Signed 4/13/18 EXPIRES 6/30/2018

Design Consultant
Gannett Fleming

Design Sub-Consultant

PER CITY OF PHOENIX ORDINANCE G-4396, THESE PLANS ARE FOR VISUAL USE ONLY AND MAY NOT BE SHARED WITH OTHERS EXCEPT AS REQUIRED TO FULFILL THE OBLIGATIONS OF YOUR CONTRACT WITH THE CITY OF PHOENIX.

NO.	REVISIONS / SUBMISSIONS	DATE
	ISSUED FOR CONSTRUCTION	04/13/18
	SUBMITTED FOR REVIEW	02/02/18

PHX SKY TRAIN
CITY OF PHOENIX AVIATION DEPARTMENT

PHX SKY TRAIN STAGE 2 DESIGN
500 S. 24TH STREET PHOENIX, AZ 85034

Designed by: MH/NM
Drawn by: BAM
Checked by: SWS
Date: 04/13/2018
Dwg scale: As Shown
CIP No.: AV10000011
KIVA No.: 07-5204

STAGE 2 – B03 DESIGN SUBMISSION

GUIDEWAY ELEVATED ALIGNMENT ABUTMENT 1 PLAN AND ELEVATION

Package: B03
Sheet Reference No: GWSG0601
V1 - 039 of 339

PLOT DATE: Apr 12, 2018 FILE PATH: C:\pwworking\gfpw01\bmoore\d0673541\AV10000011-S-2-GWSG0601.dwg bmoore

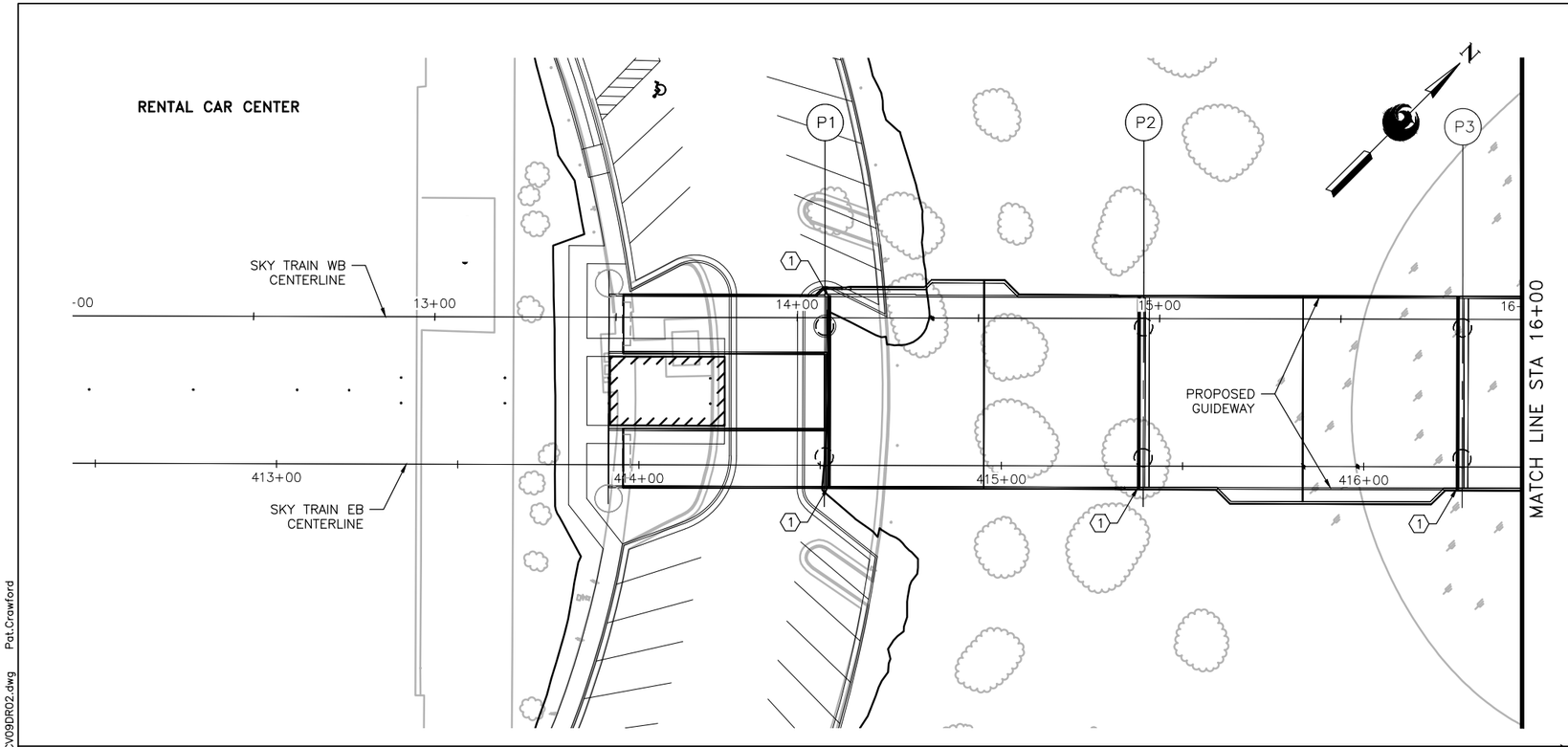

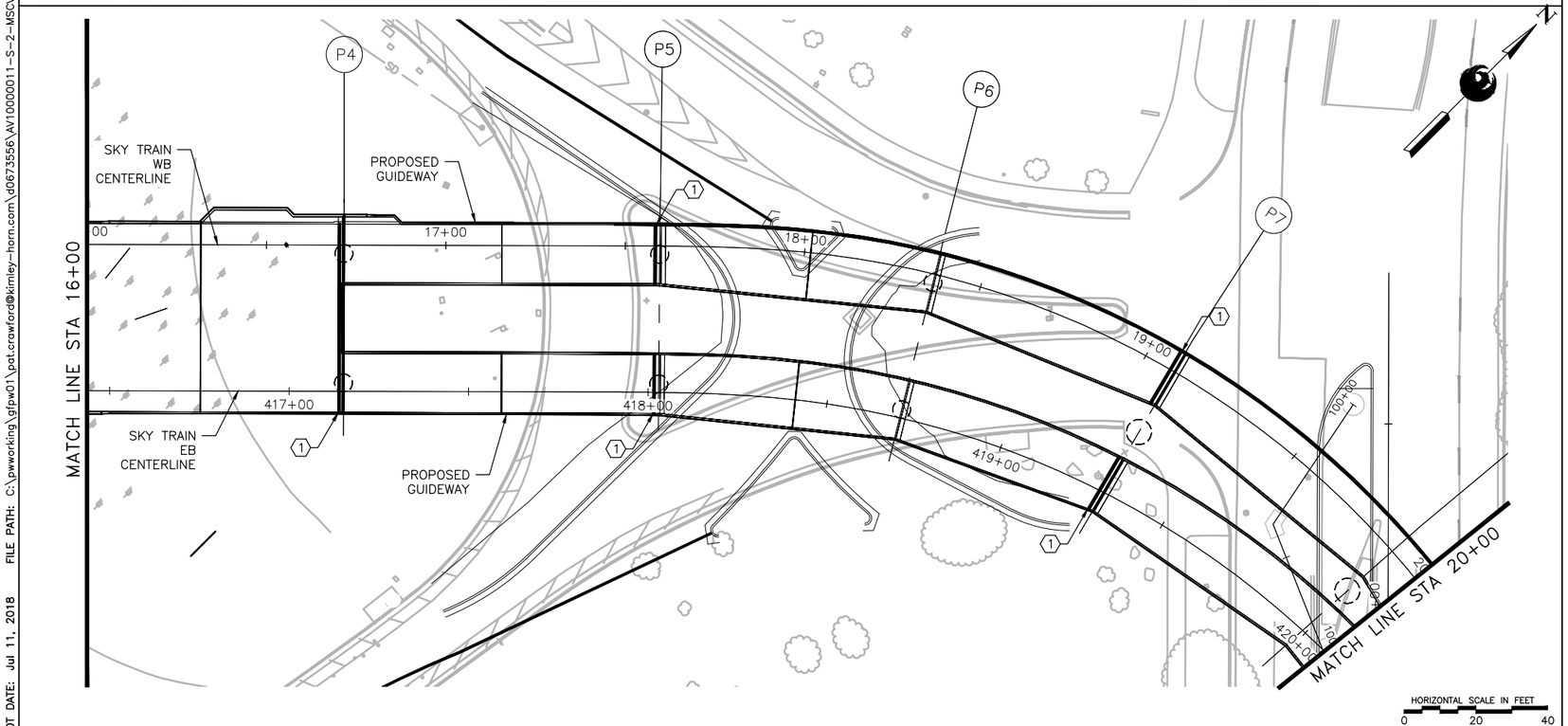

LEGEND

- PROPOSED TRENCH DRAIN
- PROPOSED COLUMN
- P1 PIER DESIGNATION

GENERAL NOTES

1. SEE STRUCTURAL SHEETS FOR STRUCTURAL COMPONENTS OF TRENCH DRAINS.

CONSTRUCTION NOTES

(1) INSTALL ZURN Z806 TRENCH DRAIN AND ZURN P6-GG GRATE PER DETAIL A, SHEET MSCV0910.

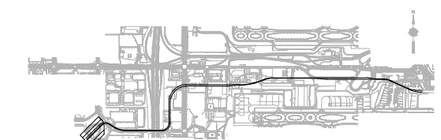

KEYMAP
N.T.S.

Call at least two full working days before you begin excavation ARIZONA 811 Blue Stake, Inc. Maricopa County (602) 263-1100 In Pinal County (520) 886-1998

Registered Professional Engineer (Civil) CERTIFICATE NO. 37721 NATHAN C. WALNUM Date Signed 07/13/18 ARIZONA U.S.A. Expires 6/30/20

Design Sub-Consultant
Kimley»Horn

Design Consultant
Gannett Fleming

PER CITY OF PHOENIX ORDINANCE G-4398, THESE PLANS ARE FOR OFFICIAL USE ONLY AND MAY NOT BE SHARED WITH OTHERS EXCEPT AS REQUIRED TO FULFILL THE OBLIGATIONS OF YOUR CONTRACT WITH THE CITY OF PHOENIX.

NO.	REVISIONS / SUBMISSIONS	DATE
	ISSUED FOR CONSTRUCTION	07/13/18
	SUBMITTED FOR REVIEW	04/06/18

PHX SKY TRAIN
CITY OF PHOENIX AVIATION DEPARTMENT

PHX SKY TRAIN STAGE 2 DESIGN
500 S. 24TH STREET
PHOENIX, AZ 85034

Designed by: JRT
Drawn by: PAC
Checked by: NCW
Date: 07/13/2018
Dwg scale: 1"=20'
CIP No.: AV10000011
KIVA No.: 07-5204

STAGE 2 – B04 DESIGN SUBMISSION

GUIDEWAY
GUIDEWAY DRAINAGE PLAN
TRENCH DRAIN PLAN

Package: B04
Sheet Reference No: MSCV0901

PLOT DATE: Jul 11, 2018 FILE PATH: C:\pwworking\gfpw01\pat.crawford@kimley-horn.com\d0673556\AV10000011-S-2-MSCV09DR02.dwg Pat.Crawford

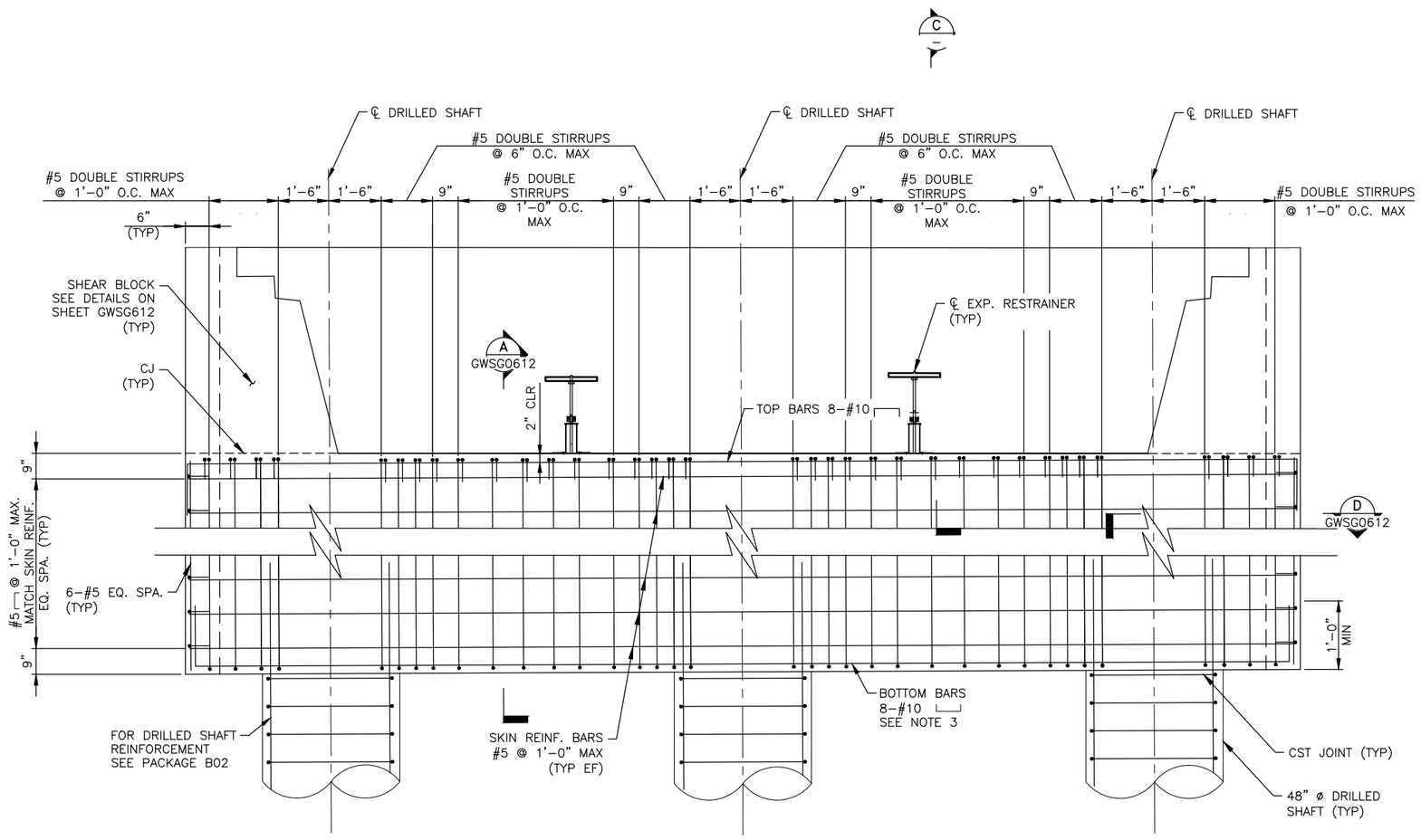

1 ABUTMENT REINFORCEMENT
SCALE: 1/2" = 1'-0"

NOTES:

1. DEV. LENGTH AND/OR LAP SPLICE LENGTH OF BARS SHALL BE AS PER BAR SPLICE TABLE ON GENERAL NOTES SHEET GWSG005.
2. FOR DIMENSIONS AND DETAILS NOT SHOWN, SEE ABUTMENT GEOMETRY PLANS.
3. ADJUST SPACING OF BOTTOM BARS TO AVOID COLUMN BARS.
4. FOR ADDITIONAL REINFORCING DETAILS, SEE SEET GWSG0612.

PER CITY OF PHOENIX ORDINANCE G-4396, THESE PLANS ARE FOR OFFICIAL USE ONLY AND MAY NOT BE SHARED WITH OTHERS EXCEPT AS REQUIRED TO FULFILL THE OBLIGATIONS OF YOUR CONTRACT WITH THE CITY OF PHOENIX.

NO.	REVISIONS / SUBMISSIONS	DATE
	ISSUED FOR CONSTRUCTION	04/13/18
	SUBMITTED FOR REVIEW	02/02/18

Design Sub-Consultant

Design Consultant
Gannett Fleming

PHX SKY TRAIN
CITY OF PHOENIX AVIATION DEPARTMENT

PHX SKY TRAIN
STAGE 2 DESIGN
500 S. 24TH STREET
PHOENIX, AZ 85034

Designed by: MH/NM
Drawn by: JRR
Checked by: SWS
Date: 04/13/2018
Dwg scale: As Shown
CIP No.: AV10000011
KIVA No.: 07-5204

STAGE 2 – B03 DESIGN SUBMISSION

GUIDEWAY
ELEVATED ALIGNMENT
ABUTMENT 1, 3 & 4
REINFORCEMENT DETAILS 1

Package: B03
Sheet Reference No: GWSG0610
V1 - 043 of 339

PLOT DATE: Apr 12, 2018 FILE PATH: C:\pwworking\gfpw01\bmoore\d0673541\AV10000011-S-2-GWSG0610.dwg bmoore

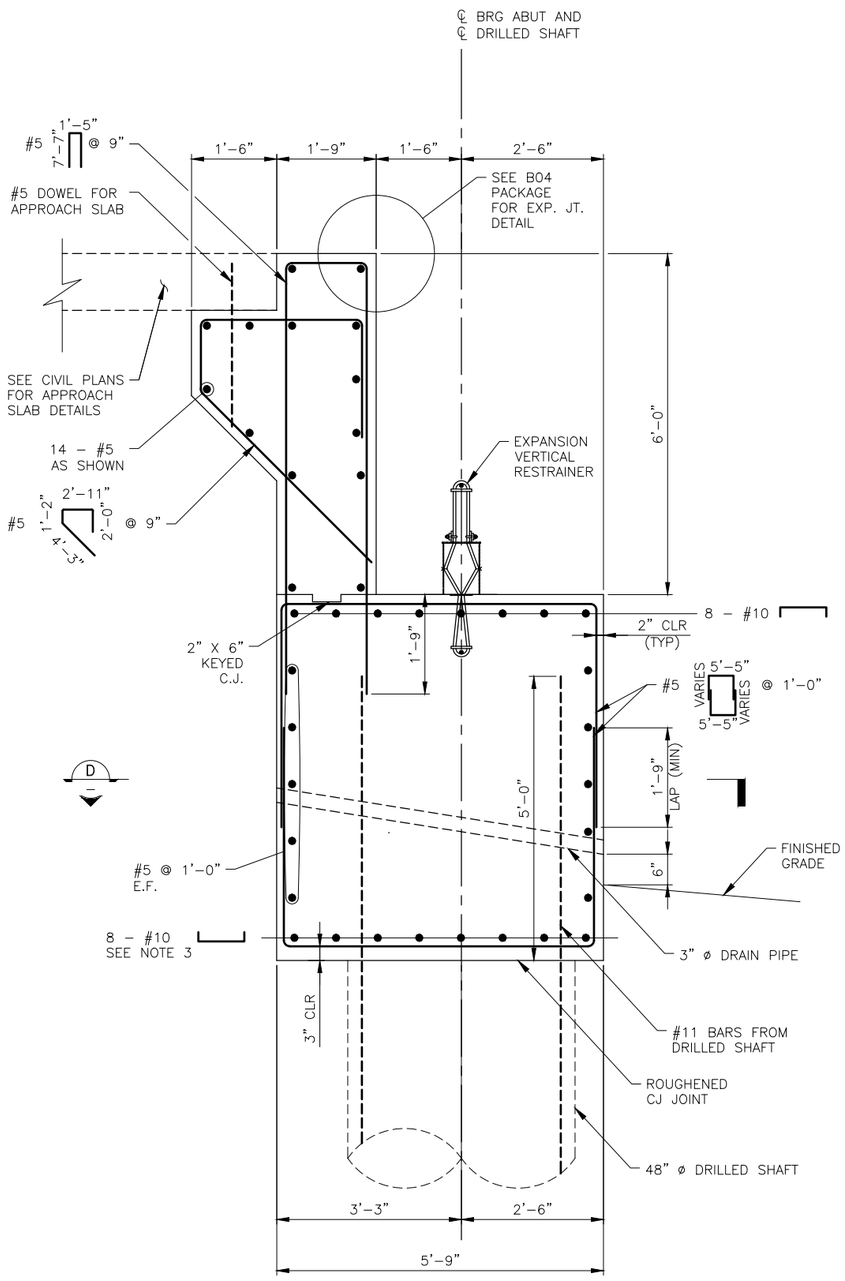

A TYPICAL ABUTMENT SECTION
SCALE: 3/4" = 1'-0"

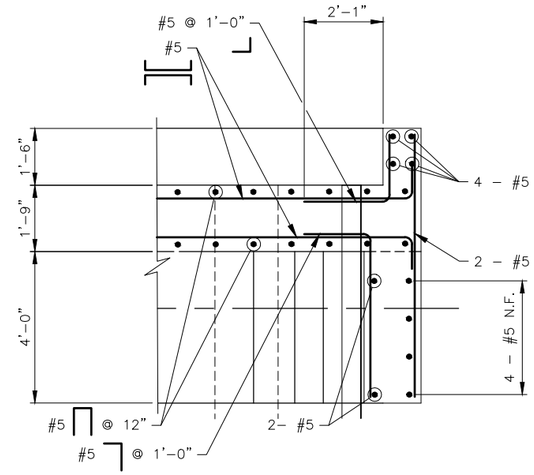

B SECTION
SCALE: 1/2" = 1'-0"

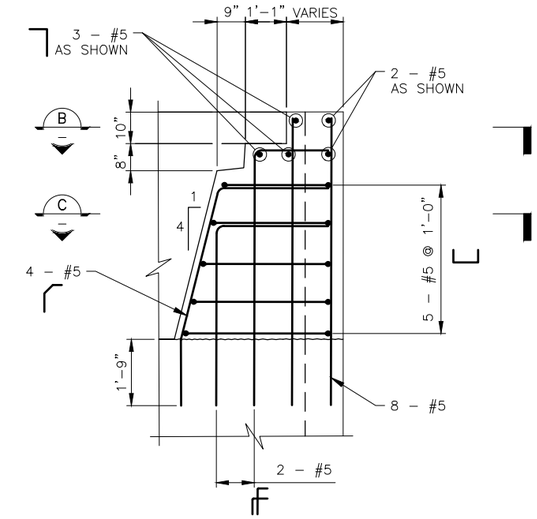

E SHEAR BLOCK
SCALE: 1/2" = 1'-0"

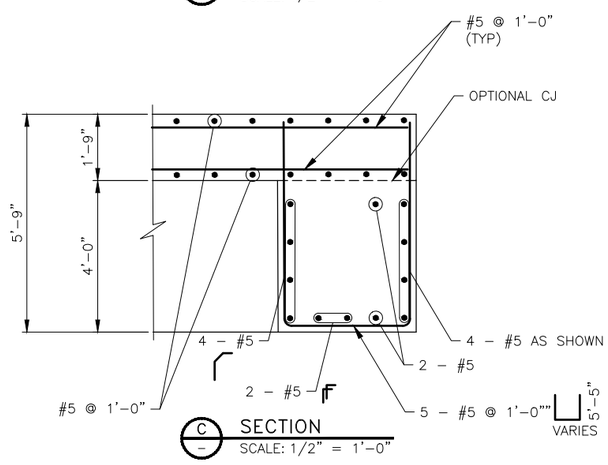

C SECTION
SCALE: 1/2" = 1'-0"

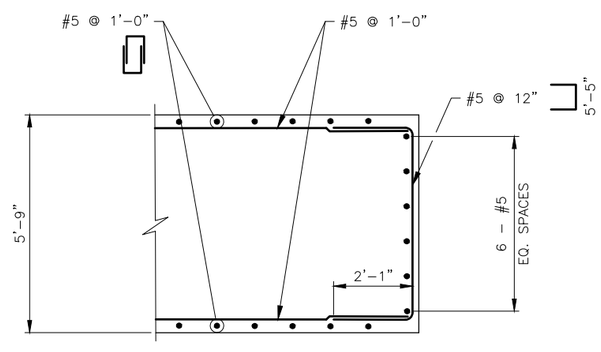

D SECTION
SCALE: 1/2" = 1'-0"

NOTES:

1. FOR DIMENSIONS NOT SHOWN, SEE ABUTMENT PLAN AND ELEVATIOB SHEETS.
2. SEE SHEET GWSG0891 FOR DETAILS OF EXPANSION VERTICAL RESTRAINERS.
3. POSITION BAR TO AVOID BARS FROM DRILLED SHAFTS.

PER CITY OF PHOENIX ORDINANCE G-4396, THESE PLANS ARE OFFICIAL USE ONLY AND MAY NOT BE SHARED WITH OTHERS EXCEPT AS REQUIRED TO FULFILL THE OBLIGATIONS OF YOUR CONTRACT WITH THE CITY OF PHOENIX.

NO.	REVISIONS / SUBMISSIONS	DATE
	ISSUED FOR CONSTRUCTION	04/13/18
	SUBMITTED FOR REVIEW	02/02/18

Design Consultant
Gannett Fleming

Design Sub-Consultant

PHX SKY TRAIN
CITY OF PHOENIX AVIATION DEPARTMENT

PHX SKY TRAIN STAGE 2 DESIGN 500 S. 24TH STREET PHOENIX, AZ 85034

Designed by: MH/NM
Drawn by: BAM
Checked by: SWS
Date: 04/13/2018
Dwg scale: As Shown
CIP No.: AV10000011
KIVA No.: 07-5204

STAGE 2 – B03 DESIGN SUBMISSION

GUIDEWAY ELEVATED ALIGNMENT ABUTMENT 1, 2, 3 & 4 REINFORCEMENT DETAILS 2

Package: B03
Sheet Reference No: GWSG0612
V1 - 045 of 339

PLOT DATE: Apr 12, 2018 FILE PATH: C:\pwworking\gfpw01\bmoore\d0673541\AV10000011-S-2-GWSG0612.dwg bmoore

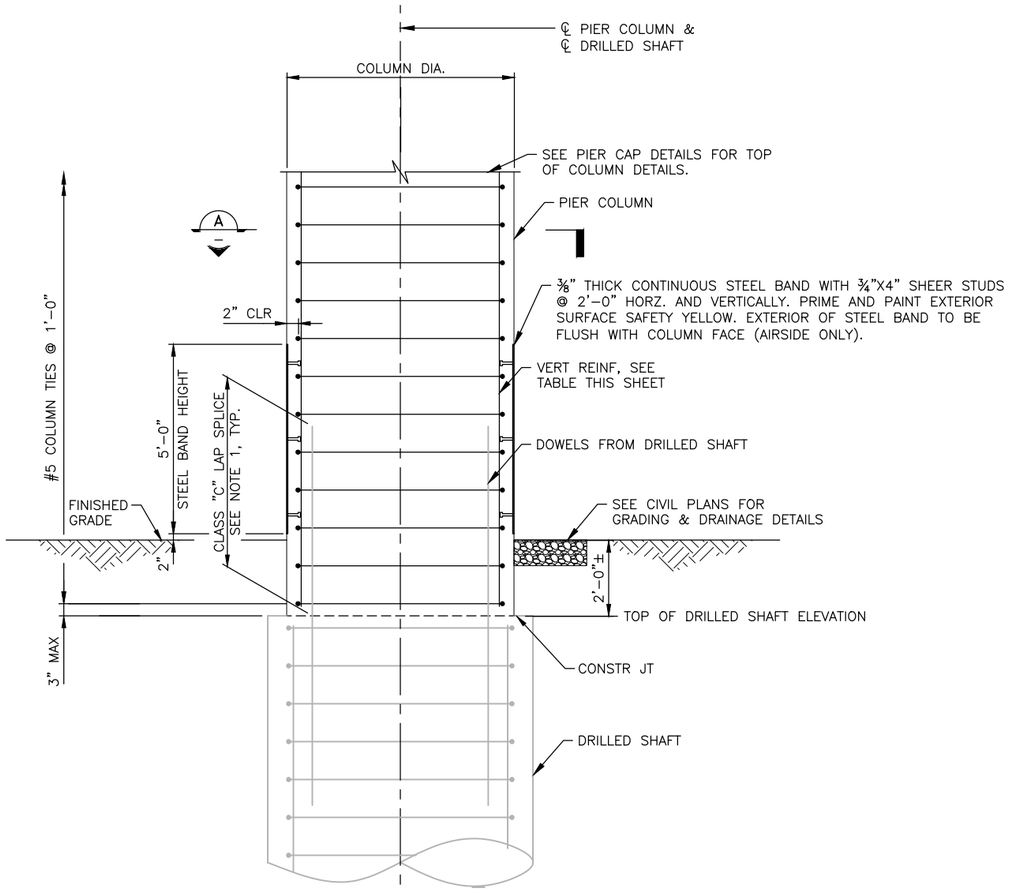

1 COLUMN REINFORCEMENT– UNEQUAL DIAMETERS
SCALE: 1/2" = 1'-0"

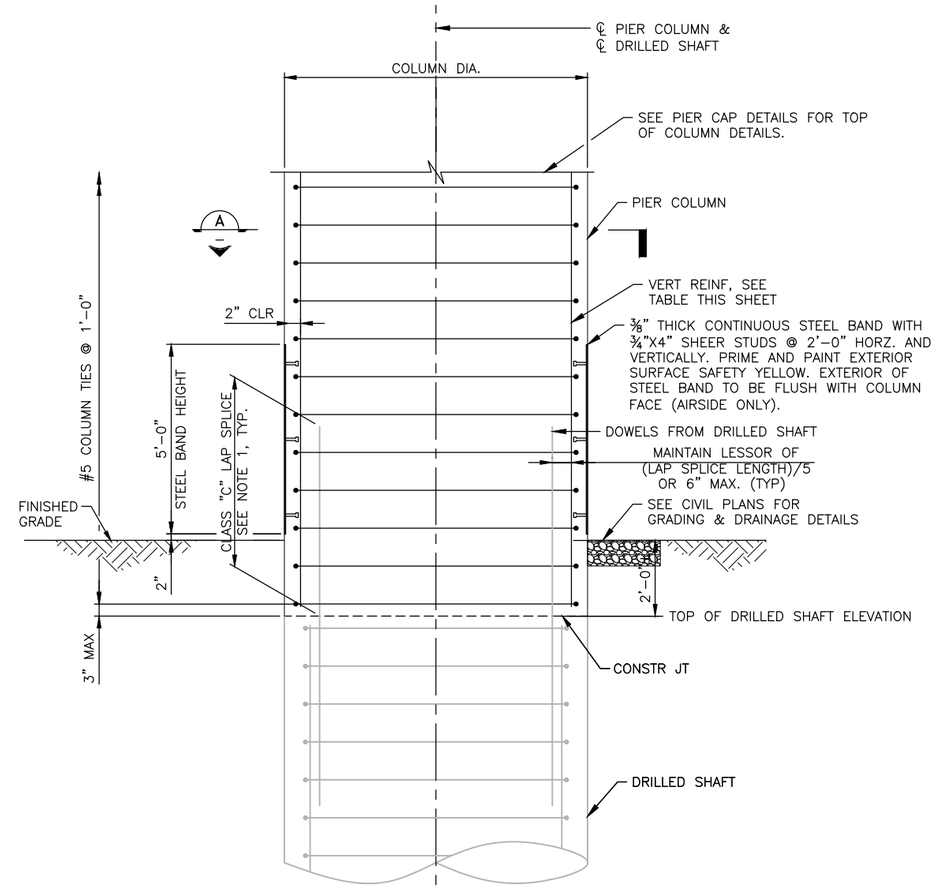

2 COLUMN REINFORCEMENT– EQUAL DIAMETERS
SCALE: 1/2" = 1'-0"

SUBSTRUCTURE REINFORCING TABLE		
PIER NUMBER	COLUMN DIA. (IN)	COLUMN VERTICAL REBAR
1–6, 24–38, 74, 75	60	20–#11
7	84	56–#11
8	84	48–#11
9, 68–72	84	42–#11
10	84	36–#11
11, 12 14–21, 40–44	72	27–#11
13, 39	72	36–#11
22	60	24–#11
23	60	32–#11
45, 46, 49–58, 60–62, 64, 65	84	36–#11
47, 48, 59, 63, 66, 67,73	96	48–#11

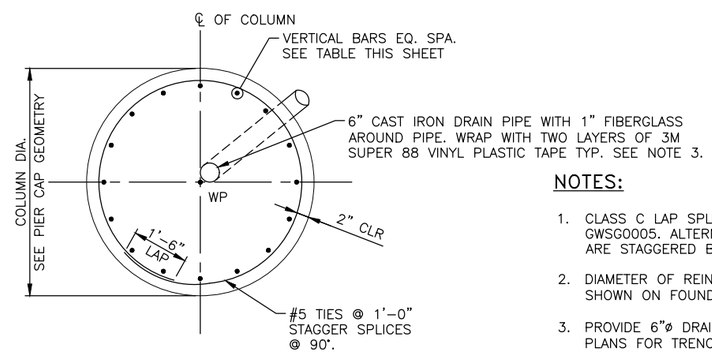

A TYPICAL COLUMN SECTION
SCALE: 1/2" = 1'-0"

NOTES:

1. CLASS C LAP SPLICE LENGTH SHALL BE PER BAR SPLICE TABLE ON SHEET GWSG0005. ALTERNATELY, CLASS B LAP SPLICE MAY BE USED IF ALTERNATE BARS ARE STAGGERED BY FULL LAP SPLICE LENGTH.
2. DIAMETER OF REINFORCED CONCRETE DRILLED SHAFTS AND COLUMNS SHALL BE AS SHOWN ON FOUNDATION PLANS, "FOUNDATION AND SUBSTRUCTURE SCHEDULE".
3. PROVIDE 6"ø DRAIN PIPES AS INDICATED ON PIER CAP GEOMETRY SHEETS. SEE CIVIL PLANS FOR TRENCH DRAIN AND DRAIN PIPE OUTFALL DETAILS. CONTRACTOR SHALL COORDINATE LOCATION OF DRAIN PIPE INSIDE THE COLUMN TO ACCEPT DRAIN PIPES FROM SUPERSTRUCTURE. VERTICAL PORTION OF DRAIN PIPE IN COLUMN SHALL BE 6" MIN CLEAR OF COLUMN LONGITUDINAL REINFORCEMENT.

Design Consultant
Gannett Fleming

Design Sub-Consultant

PER CITY OF PHOENIX ORDINANCE G-4396, THESE PLANS ARE FOR OFFICIAL USE ONLY AND MAY NOT BE SHARED WITH OTHERS EXCEPT AS REQUIRED TO FULFILL THE OBLIGATIONS OF YOUR CONTRACT WITH THE CITY OF PHOENIX.

NO.	REVISIONS / SUBMISSIONS	DATE
	ISSUED FOR CONSTRUCTION	04/13/18
	SUBMITTED FOR REVIEW	02/02/18

PHX SKY TRAIN
CITY OF PHOENIX AVIATION DEPARTMENT

PHX SKY TRAIN
STAGE 2 DESIGN
500 S. 24TH STREET
PHOENIX, AZ 85034

Designed by: MH/MM
Drawn by: BAM
Checked by: SWS
Date: 04/13/2018
Dwg scale: ½"=1'-0"
CIP No.: AV10000011
KIVA No.: 07-5204

STAGE 2 – B03 DESIGN SUBMISSION

GUIDEWAY ELEVATED ALIGNMENT COLUMN DETAILS

Package: Sheet Reference No:
B03 - GWSG0801
V1 - 046 of 339

PLOT DATE: Apr 12, 2018 FILE PATH: C:\pwworking\gfpw01\bmoore\d0673541\AV10000011-S-2-GWSG0801.dwg bmoore

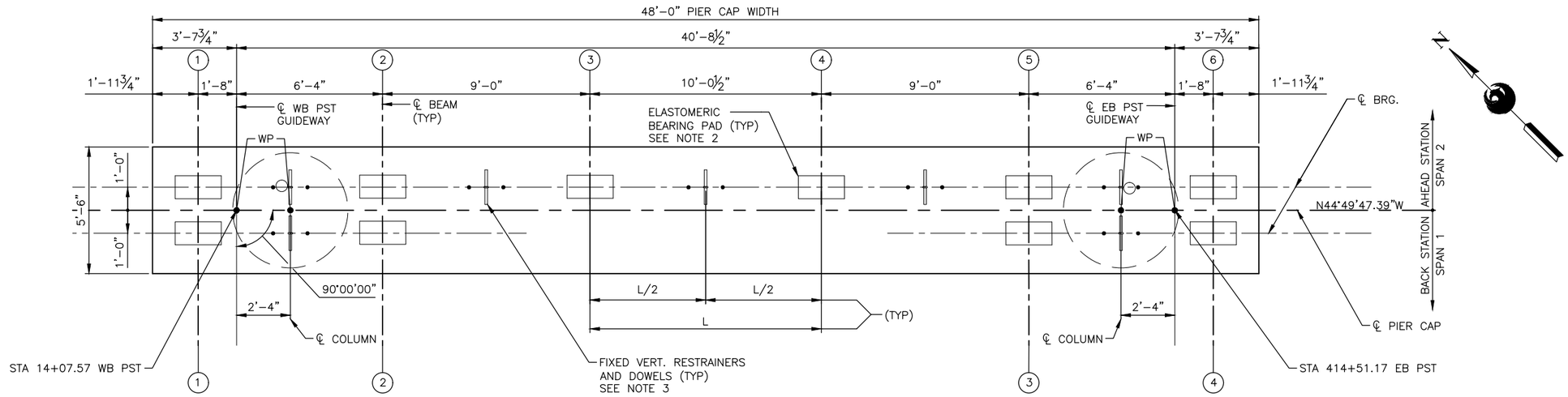

1 PIER CAP PLAN AT PIER 1

SCALE: 3/8" = 1'-0"

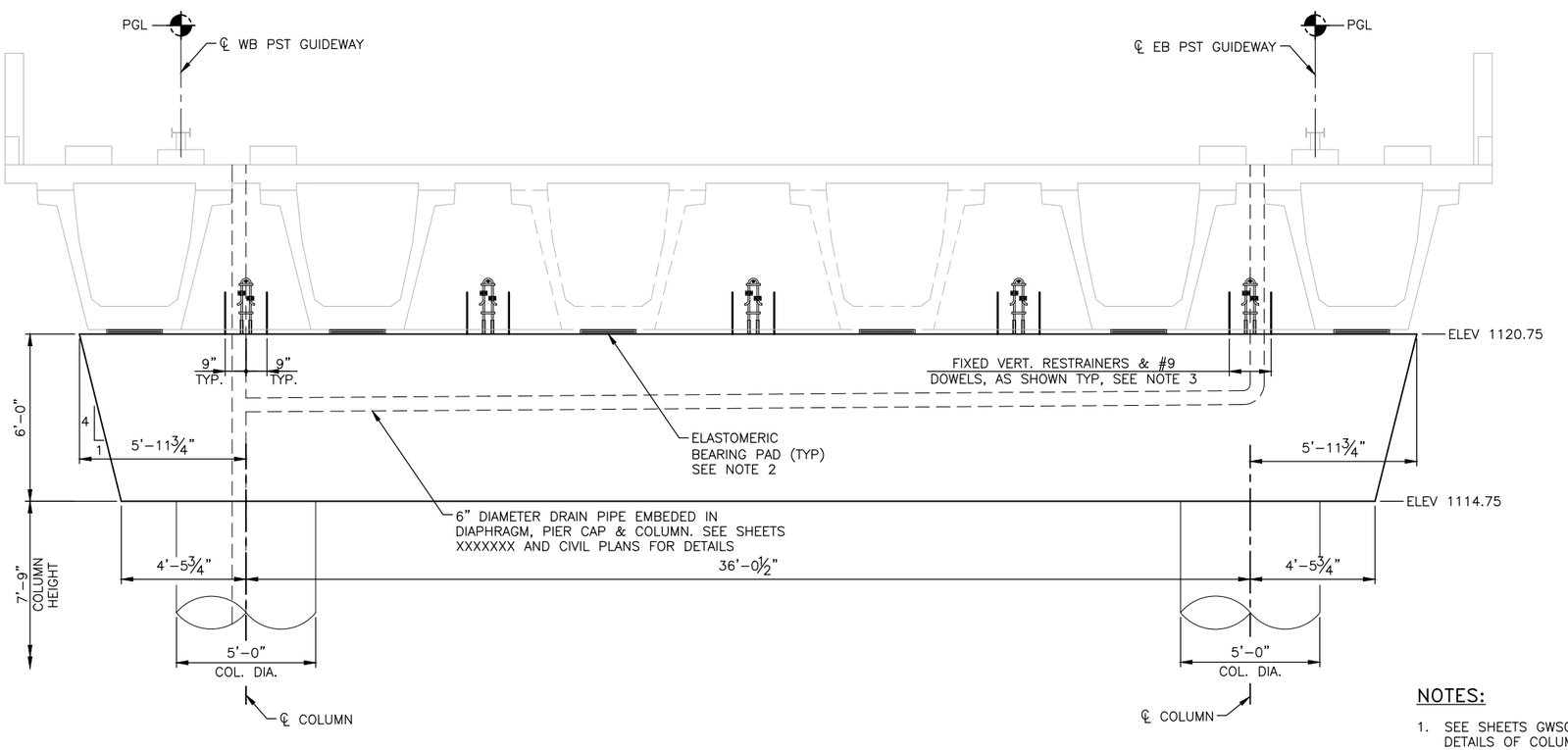

2 PIER CAP ELEVATION AT PIER 1

SCALE: 3/8" = 1'-0"
(LOOKING AHEAD STATION)

NOTES:

1. SEE SHEETS GWSG0801 AND GWSG0877 FOR REINFORCING DETAILS OF COLUMNS AND CAP, RESPECTIVELY.
2. SEE FRAMING PLANS IN PACKAGE B04 FOR BEAM ORIENTATION. SEE PACKAGE B04 FOR DETAILS OF BEARING PADS.
3. VERTICAL RESTRAINERS AND #9 DOWELS SHALL BE PROVIDED AS SHOWN. SEE SHEET GWSG0891 FOR DETAILS OF RESTRAINERS AND DOWELS.

3/8"=1'-0"
0 2' 4'

PER CITY OF PHOENIX ORDINANCE G-4396, THESE PLANS ARE FOR OFFICIAL USE ONLY AND MAY NOT BE SHARED WITH OTHERS EXCEPT AS REQUIRED TO FULFILL THE OBLIGATIONS OF YOUR CONTRACT WITH THE CITY OF PHOENIX.

NO.	REVISIONS / SUBMISSIONS	DATE
	ISSUED FOR CONSTRUCTION	04/13/18
	SUBMITTED FOR REVIEW	02/02/18

Design Consultant
Gannett Fleming

Design Sub-Consultant

PHX SKY TRAIN
CITY OF PHOENIX AVIATION DEPARTMENT

PHX SKY TRAIN STAGE 2 DESIGN 500 S. 24TH STREET PHOENIX, AZ 85034

Designed by: MH/NM
Drawn by: BAM
Checked by: SWS
Date: 04/13/2018
Dwg scale: 3/8"=1'-0"
CIP No.: AV10000011
KIVA No.: 07-5204

STAGE 2 – B03 DESIGN SUBMISSION

GUIDEWAY ELEVATED ALIGNMENT PIER CAP GEOMETRY PLAN AND ELEVATION PIER 1

Package: Sheet Reference No:
B03 - GWSG0802
V1 - 047 of 339

PLOT DATE: Apr 10, 2018 FILE PATH: C:\pwworking\gfpw01\bmoore\d0673541\AV10000011-S-2-GWSG0802.dwg bmoore

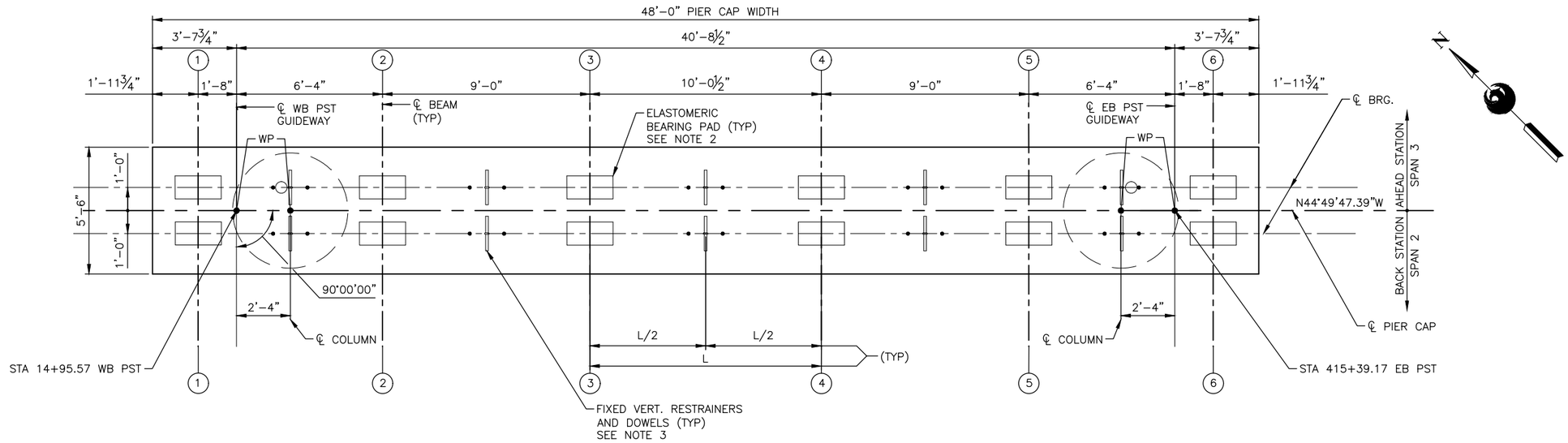

1 PIER CAP PLAN AT PIER 2

SCALE: 3/8" = 1'-0"

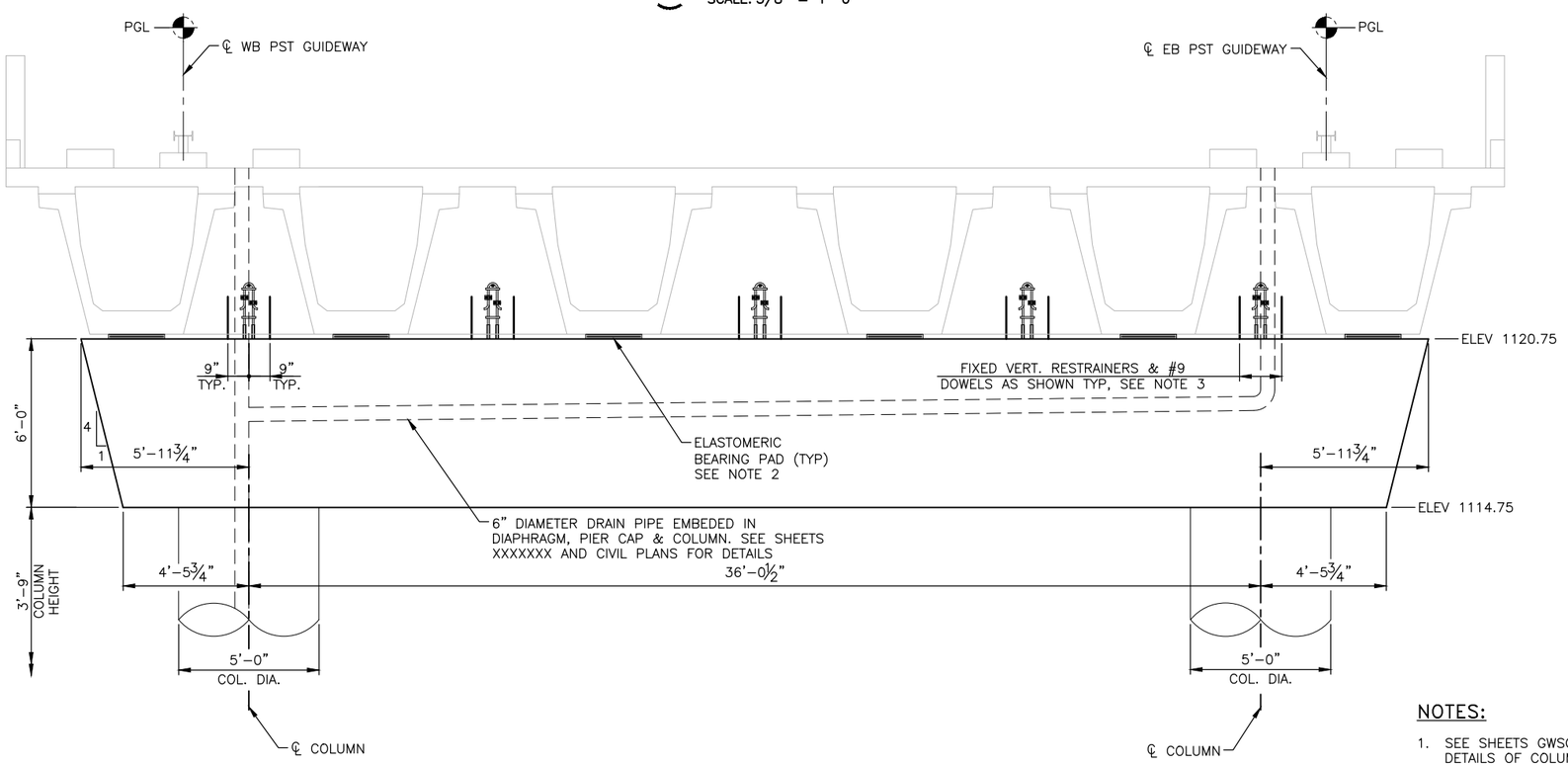

2 PIER CAP ELEVATION AT PIER 2

SCALE: 3/8" = 1'-0"
(LOOKING AHEAD STATION)

NOTES:

1. SEE SHEETS GWSG0801 AND GWSG0877 FOR REINFORCING DETAILS OF COLUMNS AND CAP, RESPECTIVELY.
2. SEE FRAMING PLANS IN PACKAGE B04 FOR BEAM ORIENTATION. SEE PACKAGE B04 FOR DETAILS OF BEARING PADS.
3. VERTICAL RESTRAINERS AND #9 DOWELS SHALL BE PROVIDED AS SHOWN. SEE SHEET GWSG0891 FOR DETAILS OF RESTRAINERS AND DOWELS.'

3/8"=1'-0"
0 2' 4'

PER CITY OF PHOENIX ORDINANCE G-4396, THESE PLANS ARE FOR OFFICIAL USE ONLY AND MAY NOT BE SHARED WITH OTHERS EXCEPT AS REQUIRED TO FULFILL THE OBLIGATIONS OF YOUR CONTRACT WITH THE CITY OF PHOENIX.

REGISTERED PROFESSIONAL ENGINEER (CIVIL) CERTIFICATE NO. 28174 MARK PILMALLIS Date Signed 4/13/18 EXPIRES 6/30/2018

Design Sub-Consultant

Design Consultant
Gannett Fleming

NO.	REVISIONS / SUBMISSIONS	DATE
	ISSUED FOR CONSTRUCTION	04/13/18
	SUBMITTED FOR REVIEW	02/02/18

PHX SKY TRAIN
CITY OF PHOENIX AVIATION DEPARTMENT

PHX SKY TRAIN
STAGE 2 DESIGN
500 S. 24TH STREET
PHOENIX, AZ 85034

Designed by: MH/NM
Drawn by: BAM
Checked by: SWS
Date: 04/13/2018
Dwg scale: 3/8" = 1'-0"
CIP No.: AV10000011
KIVA No.: 07-5204

STAGE 2 – B03 DESIGN SUBMISSION

GUIDEWAY ELEVATED ALIGNMENT PIER CAP GEOMETRY PLAN AND ELEVATION PIER 2

Package: Sheet Reference No:
B03 - GWSG0803

PLOT DATE: Apr 10, 2018 FILE PATH: C:\pwworking\gfpw01\bmoore\d0673541\AV10000011-S-2-GWSG0803.dwg bmoore

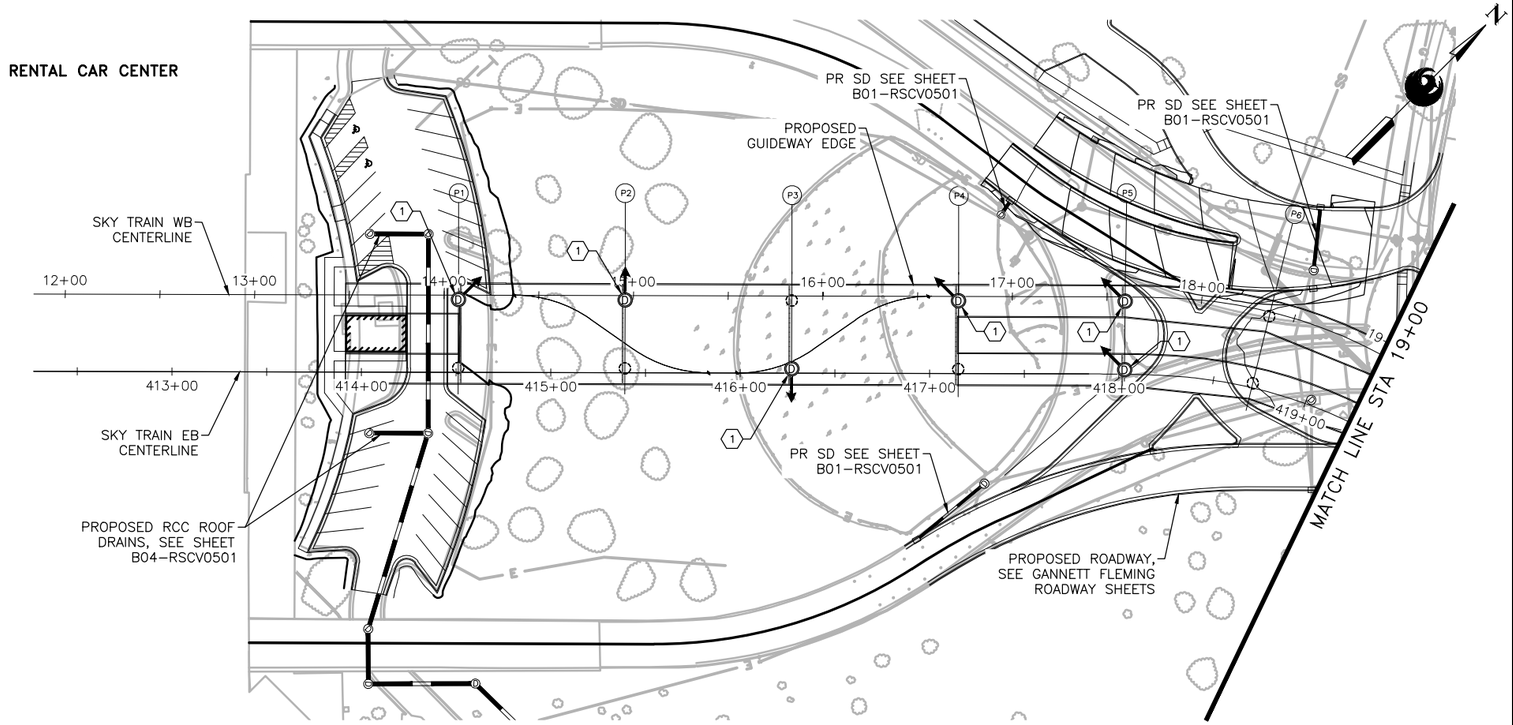

HORIZONTAL SCALE IN FEET
0 40 80

LEGEND

- (P1) PIER DESIGNATION
- PROPOSED PIER LOCATION
- DOWNSPOUT
- PROPOSED TRENCH DRAIN
- DIRECTION OF TRENCH DRAIN OUTFALL FROM GUIDEWAY
- SWALE FLOWLINE

GENERAL NOTES

1. SEE STRUCTURE SHEETS FOR DOWNSPOUT ROUTING WITHIN GUIDEWAY COLUMNS.
2. SEE ARCHITECTURE SHEETS FOR STATION DRAINAGE
3. ALL STATIONS AND OFFSETS ARE FROM THE WB GUIDEWAY CENTERLINE UNLESS OTHERWISE NOTED. ALL NORTHINGS AND EASTINGS ARE REFERENCED TO THE BACK OF CURB, FACE OF WALL, OR CENTER OF STRUCTURE UNLESS OTHERWISE NOTED.
4. EXISTING UTILITIES ARE SHOWN IN APPROXIMATE LOCATIONS ONLY. CM@RISK SHALL VERIFY EXACT LOCATIONS OF ALL UNDERGROUND UTILITIES PRIOR TO COMMENCING WORK IN ANY AREA.
5. SEE HORIZONTAL AND VERTICAL CONTROL PLAN, SHEET B03-MSGN0004 FOR BENCH MARK, BASIS OF BEARING AND BASIS OF COORDINATES.
6. SEE WATER RELOCATION PLANS B01-MSUT0303 THROUGH B01-MSUT0398.
7. SEE SEWER RELOCATION PLANS B01-MSUT0403 THROUGH B01-MSUT0484.
8. SEE PLUMBING PLANS FOR STATION DOWNSPOUTS.

CONSTRUCTION NOTES

1. CONSTRUCT 6 INCH DIP TRENCH DRAIN DOWNSPOUT PIPE WITH SPLASH BLOCK AND LAMB'S TONGUE PER DETAIL A, B, D AND E ON SHEET B03-MSCV1201
2. CONSTRUCT 6 INCH DIP TRENCH DRAIN DOWNSPOUT PIPE PER DETAIL C ON SHEET B03-MSCV1201
3. CONSTRUCT SPLASH BLOCK PER DETAIL B ON SHEET B03-MSCV1201. SEE GANNETT FLEMING STRUCTURES SHEETS FOR DOWNSPOUT PLANS.

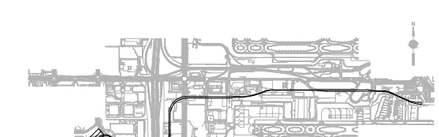

KEYMAP
N.T.S.

Call at least two full working days before you begin excavation. ARIZONA 811 Blue Stake, Inc. Blue Stake Group (602) 263-1069

Registered Professional Engineer (Civil) CERTIFICATE NO. 37721 NATHAN C. WALNUM Date Signed 6/30/20 ARIZONA U.S.A. Expires 6/30/20

Design Sub-Consultant
Kimley»Horn

Design Consultant
Gannett Fleming

PER CITY OF PHOENIX ORDINANCE G-4398, THESE PLANS ARE FOR OFFICIAL USE ONLY AND MAY NOT BE SHARED WITH OTHERS EXCEPT AS REQUIRED TO FULFILL THE OBLIGATIONS OF YOUR CONTRACT WITH THE CITY OF PHOENIX.

NO.	REVISIONS / SUBMISSIONS	DATE
	ISSUED FOR CONSTRUCTION	04/13/18
	SUBMITTED FOR REVIEW	02/02/18

PHX DVT DYR
CITY OF PHOENIX AVIATION DEPARTMENT

PHX SKY TRAIN STAGE 2 DESIGN
500 S. 24TH STREET
PHOENIX, AZ 85034

Designed by: JRT
Drawn by: PAC
Checked by: NCW
Date: 04/13/2018
Dwg scale: 1"=40'
CIP No.: AV10000011
KIVA No.: 07-5204

STAGE 2 – B03 DESIGN SUBMISSION

GUIDEWAY
GUIDEWAY DRAINAGE PLAN
TRENCH DRAIN DOWNSPOUT PLAN
RENTAL CAR CENTER

Package: Sheet Reference No:
B03-MSCV0901
V1 - 127 of 339

PLOT DATE: Apr 04, 2018 FILE PATH: C:\pwworking\gfpw01\pat.crawford@kimley-horn.com\d0673556\AV10000011-S-2-MSCV09DR01.dwg Pat.Crawford

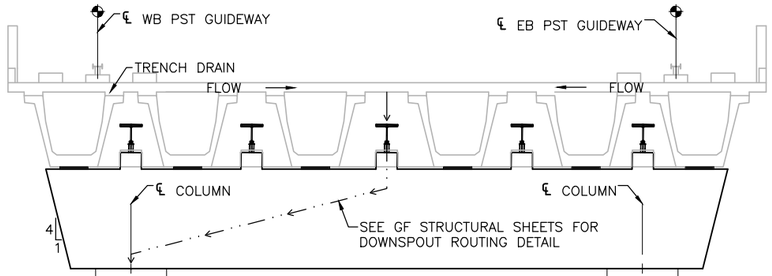

TYPE 1 PIER CAP ELEVATION
SCALE: N.T.S.

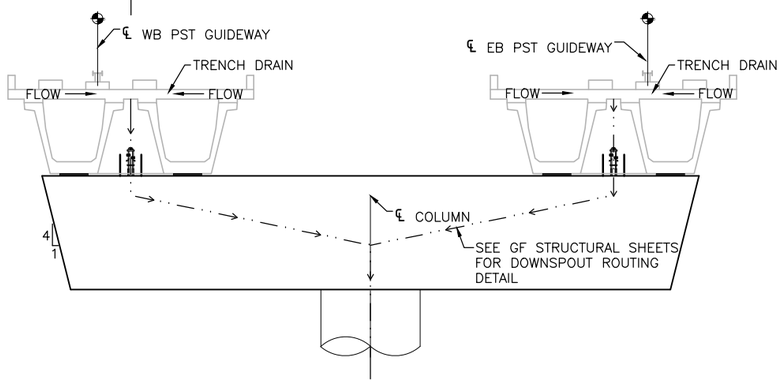

TYPE 2 PIER CAP ELEVATION
SCALE: N.T.S.

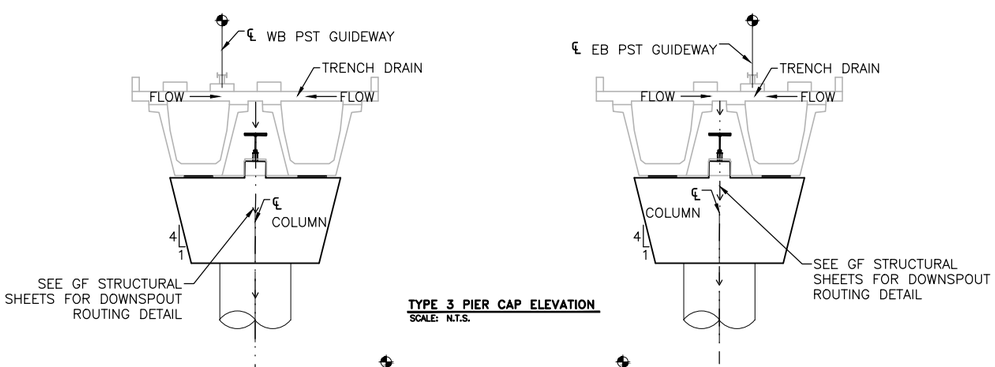

TYPE 3 PIER CAP ELEVATION
SCALE: N.T.S.

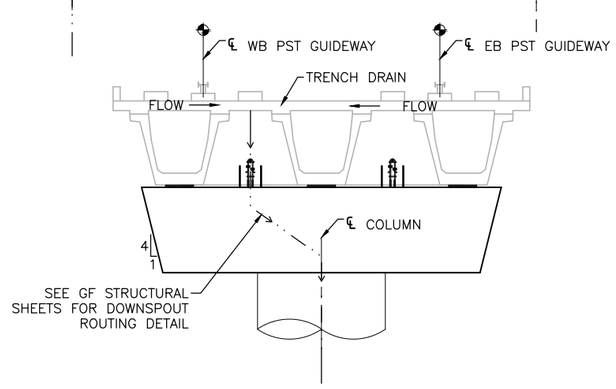

TYPE 4 PIER CAP ELEVATION
SCALE: N.T.S.

PIER #	COLUMN STATION	DETAIL ID	ELEV A	ELEV B	DEGREES FROM NORTH ARROW	GUIDEWAY SECTION TYPE
P1	WB 14+07.47	A	1109.8	1108.8	0	1
P2	WB 14+95.46	A	1113.8	1112.8	315	1
P3	WB 15+83.46	A	1108.9	1107.9	135	1
P4	WB 16+71.46	A	1104.3	1103.3	270	1
P5	WB 17+59.45	A	1104.0	1103.0	270	3
P5	EB 418+02.97	A	1102.5	1101.5	270	3
P7	WB 19+08.95	A	1098.9	1097.9	135	2
P9	WB 20+78.49	C	1094.8	1080.0	90	4
P15	WB 25+60.85	C	1094.3	1089.5	210	4
P19	WB 29+12.80	C	1094.1	1093.7	270	4
A2	WB 49+86.70	A	1100.8	1099.8	45	4
A2	EB 450+25.56	A	1102.3	1101.3	45	4
P24	WB 52+04.77	A	1100.6	1099.6	135	3
P24	EB 452+27.76	A	1100.3	1099.3	135	3
P27	WB 54+35.09	A	1100.6	1099.6	270	3
P27	EB 454+36.52	A	1100.4	1099.4	270	3
P30	WB 57+03.99	A	1102.1	1101.1	0	3
P30	EB 456+91.96	A	1102.8	1101.8	180	3
P31	WB 58+02.66	C	1104.1	1094.0	0	3
P31	EB 457+90.63	C	1103.8	1096.0	180	3
P34	EB 465+65.40	C	1104.3	1099.3	180	1
P35	EB 466+40.27	C	1103.9	1099.7	180	1
P36	EB 467+12.81	A	1105.6	1104.6	180	1
P37	WB 67+96.49	A	1105.8	1104.8	0	3
P37	EB 467+97.03	A	1105.7	1104.7	180	3
P38	WB 68+93.49	A	1106.0	1105.0	0	3
P38	EB 468+81.63	A	1106.0	1105.0	180	3
P39	WB 69+81.17	A	1106.8	1105.8	180	4
P40	WB 70+66.17	A	1105.5	1104.5	180	4
P44	WB 88+10.00	A	1110.1	1109.1	0	4
P47	WB 93+84.82	A	1112.3	1111.3	315	4
P48	WB 94+84.82	A	1111.2	1110.2	225	4
P49	WB 95+85.26	A	1112.6	1111.6	180	3
P49	EB 495+76.45	A	1112.6	1111.6	180	3
P50	WB 96+84.90	A	1113.2	1112.2	180	1
P51	WB 97+73.67	A	1113.4	1112.4	180	1
P52	EB 498+54.65	A	1113.1	1112.1	180	1
P53	EB 499+42.00	A	1113.4	1112.4	180	1
P54	EB 506+02.90	A	1115.5	1114.5	180	1
P55	WB 107+07.17	A	1115.7	1114.7	315	1
P56	EB 507+86.96	A	1116.2	1115.2	180	1
P57	EB 508+79.01	A	1115.7	1114.7	135	1
P58	WB 109+87.65	A	1115.5	1114.5	135	3
P58	EB 509+79.73	A	1115.6	1114.6	135	3
P61	WB 113+02.21	A	1117.3	1116.3	135	4
P64	WB 115+87.51	A	1115.7	1114.7	45	4
P66	WB 117+73.71	A	1116.4	1115.4	210	4
P72	WB 124+35.70	A	1118.6	1117.6	30	4
P75	WB 126+89.92	A	1119.4	1118.4	0	3
P75	EB 527+86.68	A	1119.1	1118.1	0	3

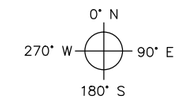

Registered Professional Engineer (Civil)
CERTIFICATE NO. 37721
NATHAN C. WALNUM
Date Signed 04/20/18
ARIZONA, U.S.A.
Expires 6/30/20

Design Sub-Consultant
Kimley»Horn

Design Consultant
Gannett Fleming

PER CITY OF PHOENIX ORDINANCE G-4396, THESE PLANS ARE FOR OFFICIAL USE ONLY AND MAY NOT BE SHARED WITH OTHERS EXCEPT AS REQUIRED TO FULFILL THE OBLIGATIONS OF YOUR CONTRACT WITH THE CITY OF PHOENIX.

NO.	REVISIONS / SUBMISSIONS	DATE
	ISSUED FOR CONSTRUCTION	04/13/18
	SUBMITTED FOR REVIEW	02/02/18

PHX SKY TRAIN
CITY OF PHOENIX AVIATION DEPARTMENT

PHX SKY TRAIN STAGE 2 DESIGN
500 S. 24TH STREET PHOENIX, AZ 85034

Designed by: JRT
Drawn by: PAC
Checked by: NCW
Date: 04/13/2018
Dwg scale: N/A
CIP No.: AV10000011
KIVA No.: 07-5204

STAGE 2 – B03 DESIGN SUBMISSION

GUIDEWAY
GUIDEWAY DRAINAGE PLAN
TRENCH DRAIN DETAILS

Package: Sheet Reference No:
B03 - MSCV1202
V1 - 139 of 339

PLOT DATE: Apr 11, 2018 FILE PATH: C:\pwworking\gfpw01\pat.crawford@kimley-horn.com\d0673556\AV10000011-S-2-MSCV12DZ01.dwg Pat.Crawford

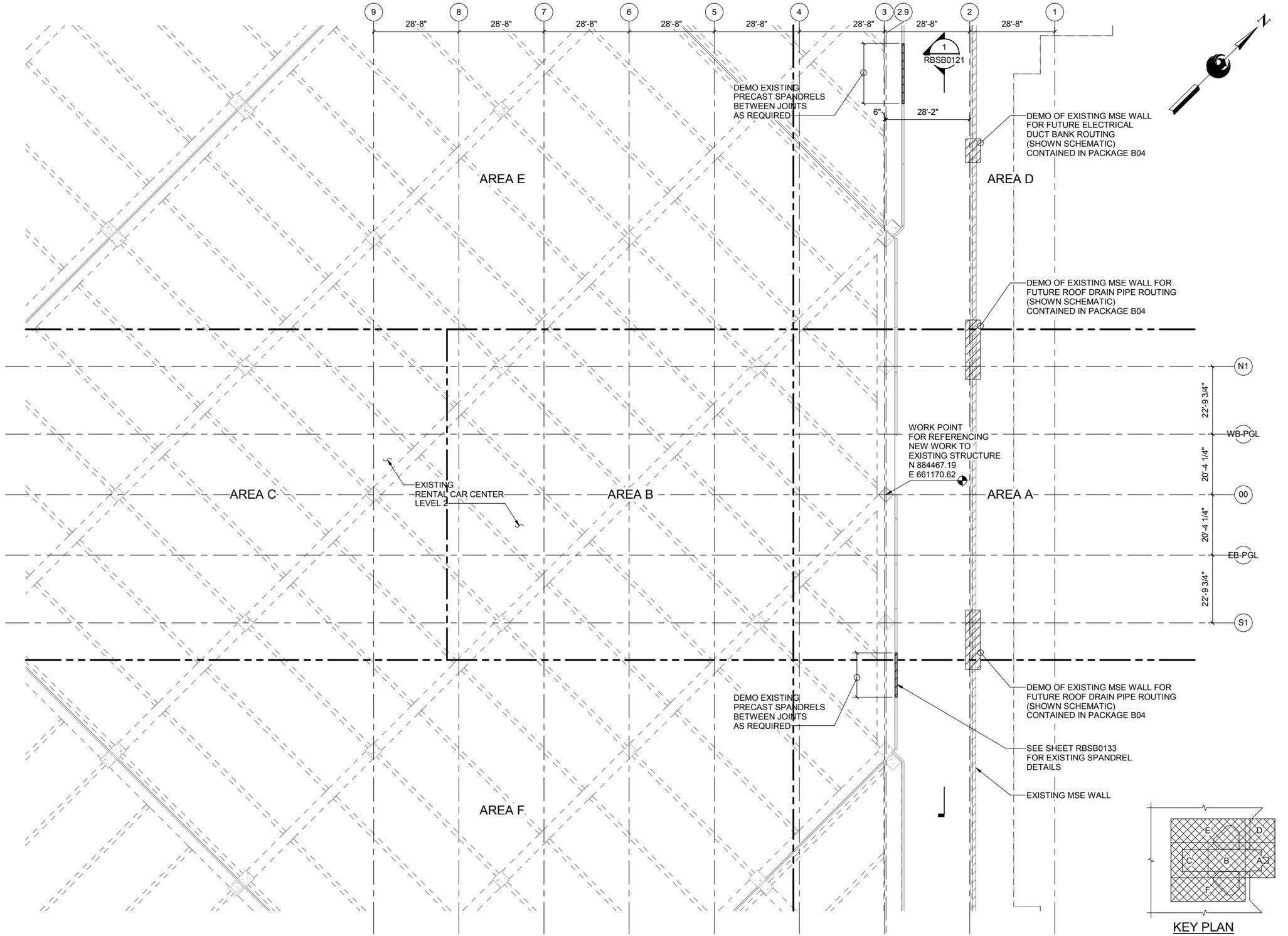

VISITOR PARKING LEVEL DEMO PLAN

SCALE: 1/16" = 1'-0"

Local File:AV10000011-S-2-RCSBXX01_R17_A360_detached.rvt
Central File: BIM 360//62421 - Phoenix Sky Train Project - Stage 2062421_FR01_S_central_R17_A360.rvt

Project Number: 62421
4/11/2018 9:22:15 PM

Design Consultant

Gannett Fleming

Design Sub-Consultant

PER CITY OF PHOENIX ORDINANCE G-4396, THESE PLANS ARE FOR OFFICIAL USE ONLY AND MAY NOT BE SHARED WITH OTHRES EXCEPT AS REQUIRED TO FULFILL THE OBLIGATION OF YOUR CONTRACT WITH THE CITY OF PHOENIX

NO.	REVISIONS / SUBMISSIONS	DATE
	ISSUED FOR CONSTRUCTION	04/13/18
	SUBMITTED FOR REVIEW	02/02/18

PHX SKY TRAIN
CITY OF PHOENIX AVIATION DEPARTMENT

PHX SKY TRAIN
STAGE 2 DESIGN
500 S 24TH STREET
PHOENIX, AZ 85034

Designed by:	ACK
Drawn by:	MWK
Checked by:	SES
Date:	04/13/2018
Dwg scale:	1/16" = 1'-0"
CIP No.:	AV10000011
KIVA No.:	07-5204

STAGE 2 - B03 DESIGN SUBMISSION

RCC STATION
STRUCTURAL
VISITOR PARKING LEVEL DEMO PLAN

Package: B03

Sheet Reference No: **RBSB0101**

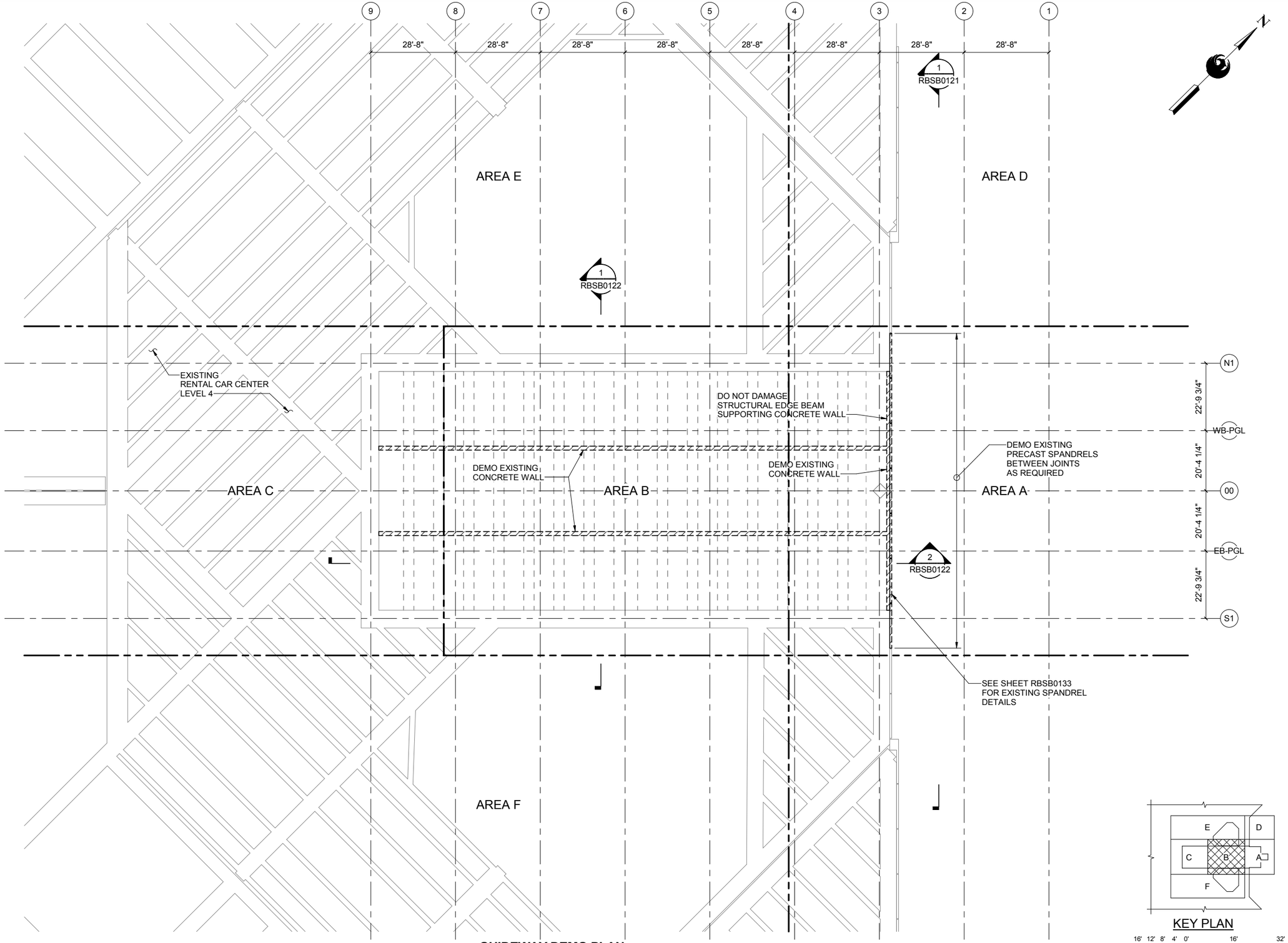

GUIDEWAY DEMO PLAN

SCALE: 1/16" = 1'-0"

Design Sub-Consultant

Design Consultant

Gannett Fleming

PER CITY OF PHOENIX ORDINANCE G-4396, THESE PLANS ARE FOR OFFICIAL USE ONLY AND MAY NOT BE SHARED WITH OTHRES EXCEPT AS REQUIRED TO FULFILL THE OBLIGATION OF YOUR CONTRACT WITH THE CITY OF PHOENIX

NO.	REVISIONS / SUBMISSIONS	DATE
	ISSUED FOR CONSTRUCTION	04/13/18
	SUBMITTED FOR REVIEW	02/02/18

PHX WT EYR
CITY OF PHOENIX AVIATION DEPARTMENT

PHX SKY TRAIN STAGE 2 DESIGN
500 S 24TH STREET
PHOENIX, AZ 85034

Designed by:	ACK
Drawn by:	MWK
Checked by:	SES
Date:	04/13/2018
Dwg scale:	1/16" = 1'-0"
CIP No.:	AV10000011
KIVA No.:	07-5204

STAGE 2 - B03 DESIGN SUBMISSION

RCC STATION STRUCTURAL GUIDEWAY DEMO PLAN

Package:

Sheet Reference No:

B03 - RBSB0102

V1 - 229 of 339

Project Number: 62421
4/11/2018 9:22:19 PM

Local File: AV10000011-S-2-RCSBXX01_R17_A360_detached.rvt
Central File: BIM 360//62421 - Phoenix Sky Train Project - Stage 2/062421_FR01_S_central_R17_A360.rvt

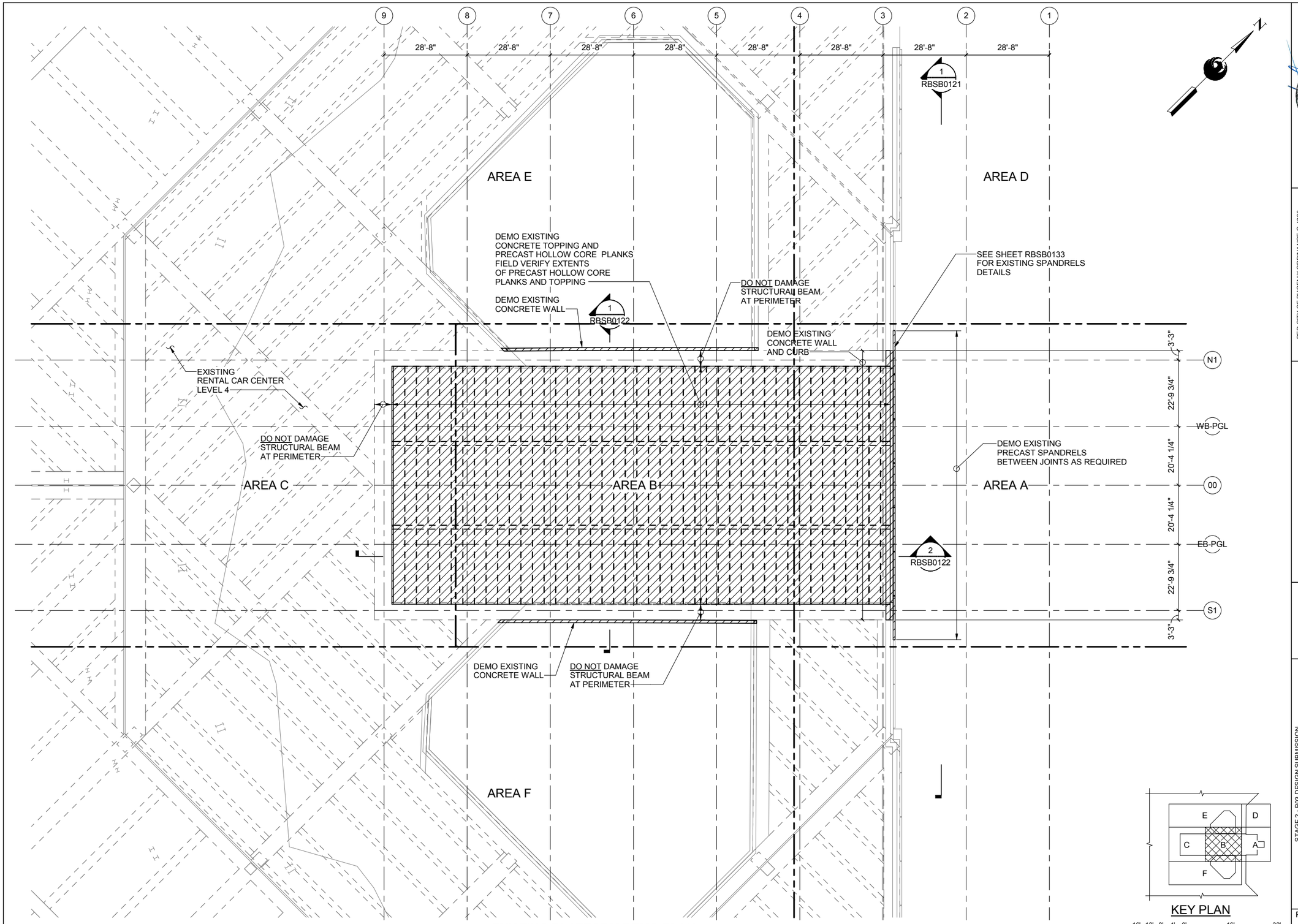

EXISTING PLATFORM DEMO PLAN

SCALE: 1/16" = 1'-0"

Project Number: 62421
4/11/2018 9:22:21 PM

Local File: AV10000011-S-2-RCSBXX01_R17_A360_detached.rvt
Central File: BIM 360/62421 - Phoenix Sky Train Project - Stage 2/062421_FR01_S_central_R17_A360.rvt

Design Consultant

Design Sub-Consultant

Gannett Fleming

PER CITY OF PHOENIX ORDINANCE G-4336, THESE PLANS ARE FOR OFFICIAL USE ONLY AND MAY NOT BE SHARED WITH OTHRES EXCEPT AS REQUIRED TO FULFILL THE OBLIGATION OF YOUR CONTRACT WITH THE CITY OF PHOENIX

NO.	REVISIONS / SUBMISSIONS	DATE
	ISSUED FOR CONSTRUCTION	04/13/18
	SUBMITTED FOR REVIEW	02/02/18

PHX SKY TRAIN
CITY OF PHOENIX AVIATION DEPARTMENT

PHX SKY TRAIN
STAGE 2 DESIGN
500 S 24TH STREET
PHOENIX, AZ 85034

Designed by:	ACK
Drawn by:	MWK
Checked by:	SES
Date:	04/13/2018
Dwg scale:	1/16" = 1'-0"
CIP No.:	AV10000011
KIVA No.:	07-5204

STAGE 2 - B03 DESIGN SUBMISSION

RCC STATION
STRUCTURAL
PLATFORM DEMO PLAN

Package: B03

Sheet Reference No: RBSB0103

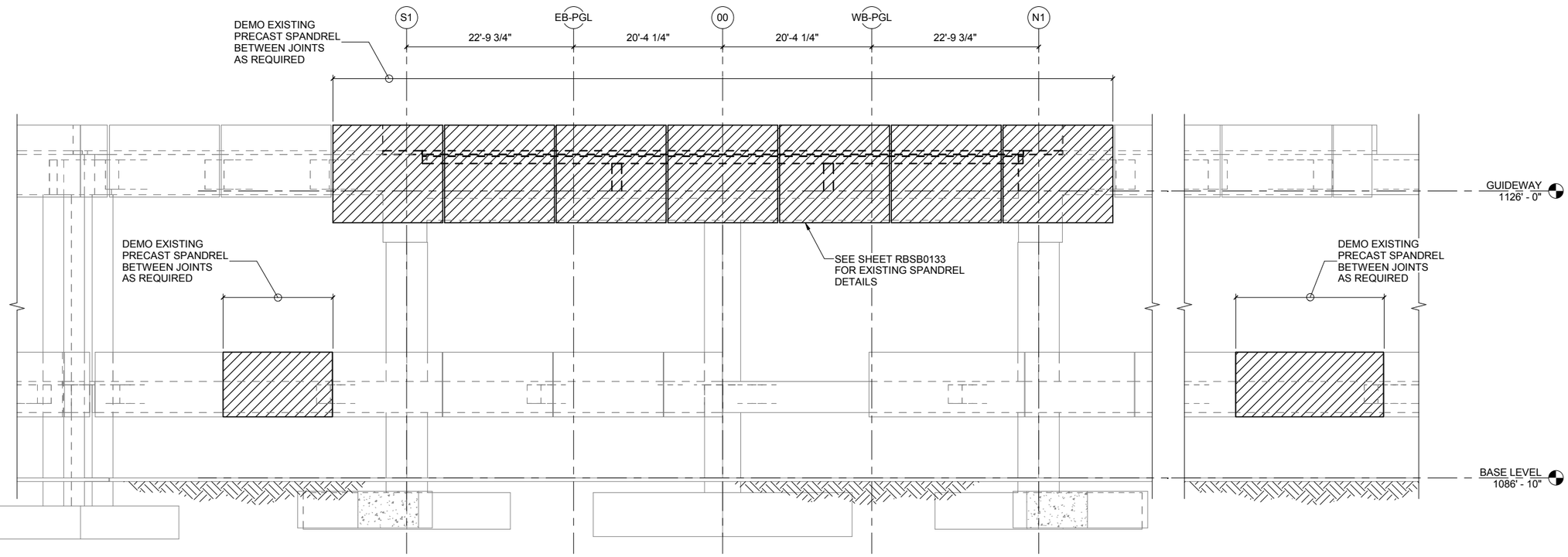

1 RBSB0121 **SECTION**
SCALE: 1/8" = 1'-0"

Project Number: 62421
4/11/2018 9:22:23 PM

Local File: AV10000011-S-2-RCSBXX01_R17_A360_detached.rvt
Central File: BIM 360/62421 - Phoenix Sky Train Project - Stage 2/062421_FR01_S_central_R17_A360.rvt

Design Consultant
Gannett Fleming

Design Sub-Consultant

PER CITY OF PHOENIX ORDINANCE G-4396, THESE PLANS ARE FOR ORIGINAL USE ONLY AND MAY NOT BE SHARED WITH OTHRES EXCEPT AS REQUIRED TO FULFILL THE OBLIGATION OF YOUR CONTRACT WITH THE CITY OF PHOENIX

NO.	REVISIONS / SUBMISSIONS	DATE
	ISSUED FOR CONSTRUCTION	04/13/18
	SUBMITTED FOR REVIEW	02/02/18

PHX SKY HARBOR
CITY OF PHOENIX AVIATION DEPARTMENT

PHX SKY TRAIN
STAGE 2 DESIGN
500 S 24TH STREET
PHOENIX, AZ 85034

Designed by:	ACK
Drawn by:	MWK
Checked by:	SES
Date:	04/13/2018
Dwg scale:	1/8" = 1'-0"
CIP No.:	AV10000011
KIVA No.:	07-5204

STAGE 2 - B03 DESIGN SUBMISSION

RCC STATION
STRUCTURAL
FULL SECTIONS

Package: **B03 -** Sheet Reference No: **RBSB0121**

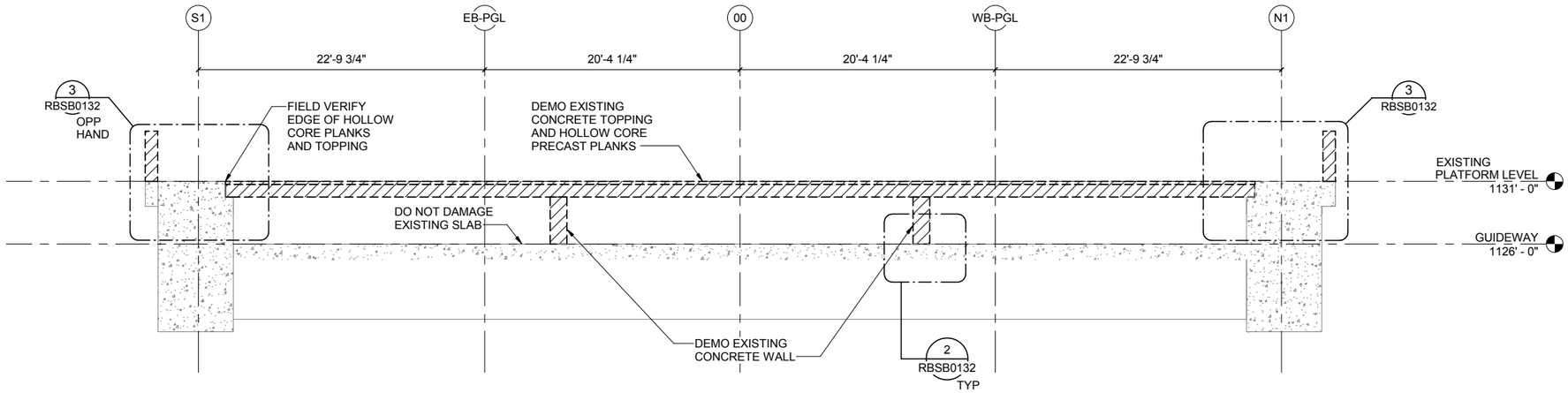

1 RBSB0122 **SECTION** SCALE: 3/16" = 1'-0"

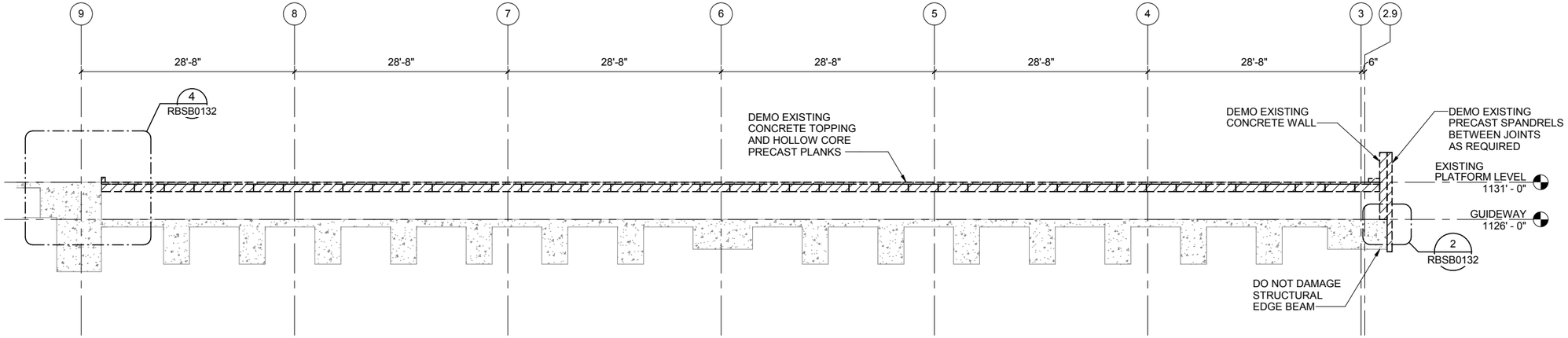

2 RBSB0122 **SECTION** SCALE: 1/8" = 1'-0"

Local File: AV10000011-S-2-RCSBXX01_R17_A360_detached.rvt
Central File: BIM 360/62421 - Phoenix Sky Train Project - Stage 2/062421_FR01_S_central_R17_A360.rvt

Project Number: 62421
4/11/2018 9:22:27 PM

Design Consultant

Design Sub-Consultant

Gannett Fleming

PER CITY OF PHOENIX ORDINANCE G-4396, THESE PLANS ARE FOR OFFICIAL USE ONLY AND MAY NOT BE SHARED WITH OTHRES EXCEPT AS REQUIRED TO FULFILL THE OBLIGATION OF YOUR CONTRACT WITH THE CITY OF PHOENIX

NO.	REVISIONS / SUBMISSIONS	DATE
	ISSUED FOR CONSTRUCTION	04/13/18
	SUBMITTED FOR REVIEW	02/02/18

PHX SKY TRAIN
CITY OF PHOENIX AVIATION DEPARTMENT

PHX SKY TRAIN
STAGE 2 DESIGN
500 S 24TH STREET
PHOENIX, AZ 85034

Designed by:	ACK
Drawn by:	MWK
Checked by:	SES
Date:	04/13/2018
Dwg scale:	As indicated
CIP No.:	AV10000011
KIVA No.:	07-5204

STAGE 2 - B03 DESIGN SUBMISSION

RCC STATION
STRUCTURAL
FULL SECTIONS

Package: **B03**
Sheet Reference No: **RBSB0122**

EXPOSED REINFORCEMENT REPAIR PROCEDURES USE THIS DETAIL WITH LONG TERM EXPOSURE TO WATER/MOISTURE FOR ALL OTHER AREAS SEE DETAIL 2 THIS SHEET

1. REMOVE EXISTING CONCRETE (DIMPLE) AROUND REINFORCEMENT TO A DIAMETER OF 2.5 TIMES THE REBAR DIAMETER (1-1/2 -INCH DIAMETER MINIMUM) AND A MINIMUM DEPTH OF 1-INCH. DIMPLE SIDES SHALL BE NEAR PERPENDICULAR TO EXPOSED SURFACE FACE.

2. REMOVE/ TORCH CUT THE EXPOSED REINFORCING END TO THE BOTTOM OF DIMPLE.

3. ROUGHEN AND CLEAN DIMPLE SURFACE TO A MINIMUM SURFACE PROFILE OF +/- 1/16 INCH.

4. COAT END OF EXPOSED REINFORCEMENT WITH SIKA ARMATEC 110 EPOCEM. SIKA ARMATEC REQUIRES TWO COATS WITH A DRYING PERIOD IN-BETWEEN COATS. SEE PRODUCT LITERATURE FOR ADDITIONAL INFORMATION.

5. AFTER SECOND COAT OF SIKA ARMATEC HAS DRIED, FILL DIMPLE USING A REPAIR MORTAR SUCH AS SIKATOP 122 PLUS.

SURFACE PROTECTION PROCEDURES:

6. SEE OVERALL SECTION FOR EXTENT OF COATING. CONCRETE SURFACES SHALL BE CLEAN AND FREE FROM ANY DUST, LAITANCE, GREASE, AND ALL BOND-INHIBITING MATERIALS.

7. APPLY TWO COATS OF SIKAGARD 62 TO THE SURFACE OF THE CONCRETE. SEE PRODUCT LITERATURE FOR ADDITIONAL INFORMATION.

NOTE:
REFERENCE PRODUCT LITERATURE FOR SURFACE PREPARATIONS, MIXING PROCEDURE, POT LIFE, APPLICATION PROCEDURES, AND ANY ADDITIONAL INFORMATION. ANY PRODUCT SUBSTITUTIONS SHALL BE SUBMITTED TO THE ENGINEER FOR APPROVAL. PRODUCTS SHALL BE APPROVED FOR CONTACT WITH POTABLE WATER.

EXPOSED FACE

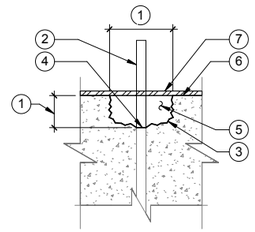

DIMPLE SECTION

SEE EXPOSED REINFORCEMENT
REPAIR PROCEDURES FOR KEYNOTES

EXPOSED REINF REPAIR PROCEDURE DETAIL FOR REINF EXPOSED TO SOIL/WATER

1 RBSB0132 SCALE: N.T.S.

EXPOSED REINFORCEMENT REPAIR PROCEDURES

1. CUT REINFORCING TO FACE OF CONCRETE.

2. GRIND SMOOTH CONCRETE FACE - REMOVE ALL REINFORCING SLAG.

3. APPLY TWO COATS OF SIKAGARD 62 WITH DRY TIME BETWEEN COATS. EXTEND SIKAGARD 62 6" BEYOND REINFORCING.

NOTE:
REFERENCE PRODUCT LITERATURE FOR SURFACE PREPARATIONS, MIXING PROCEDURE, POT LIFE, APPLICATION PROCEDURES, AND ANY ADDITIONAL INFORMATION. ANY PRODUCT SUBSTITUTIONS SHALL BE SUBMITTED TO THE ENGINEER FOR APPROVAL. PRODUCTS SHALL BE APPROVED FOR CONTACT WITH POTABLE WATER.

EXPOSED FACE

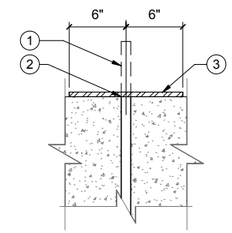

SEE EXPOSED REINFORCEMENT
REPAIR PROCEDURES FOR KEYNOTES

EXPOSED REINF REPAIR PROCEDURE DETAIL

2 RBSB0132 SCALE: N.T.S.

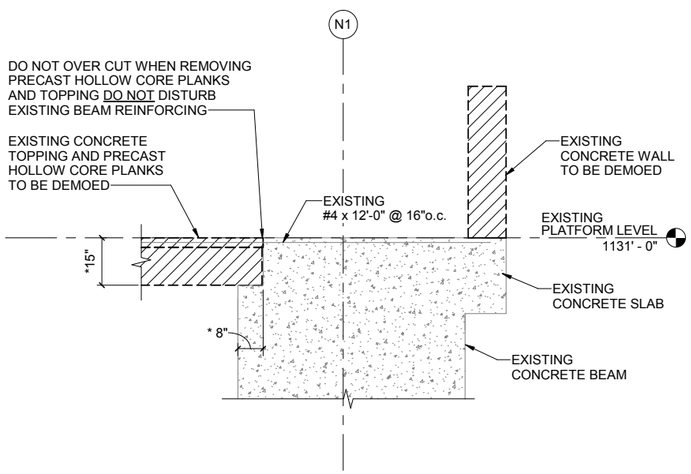

NOTE:
CONTRACTOR TO VERIFY EXISTING DIMENSIONS

ALL CONNECTIONS TO BE FIELD VERIFIED

EXISTING PRECAST HOLLOW CORE PLANKS END CONNECTION

3 RBSB0132 SCALE: 1/2" = 1'-0"

CONTRACTOR PROVIDE
ACCESS HOLE IN PRECAST
TO LOCATE FACE OF CONCRETE BEAM

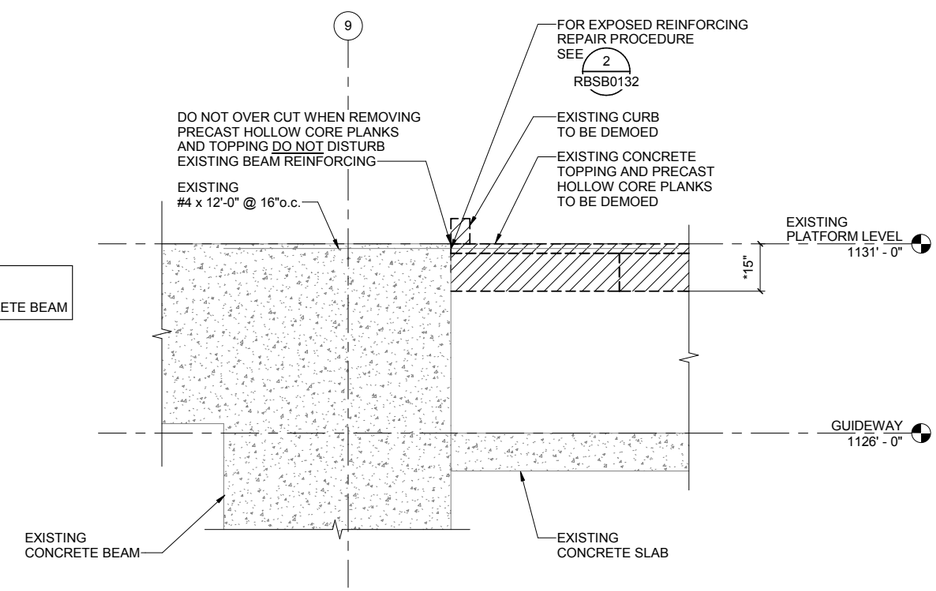

NOTE:
CONTRACTOR TO VERIFY EXISTING DIMENSIONS

ALL CONNECTIONS TO BE FIELD VERIFIED

EXISTING PRECAST HOLLOW CORE PLANKS END CONNECTION

4 RBSB0132 SCALE: 1/2" = 1'-0"

Design Consultant

Gannett Fleming

Design Sub-Consultant

PER CITY OF PHOENIX ORDINANCE G-4396, THESE PLANS ARE FOR OFFICIAL USE ONLY AND MAY NOT BE SHARED WITH OTHRES EXCEPT AS REQUIRED TO FULFILL THE OBLIGATION OF YOUR CONTRACT WITH THE CITY OF PHOENIX

NO.	REVISIONS / SUBMISSIONS	DATE
	ISSUED FOR CONSTRUCTION	04/13/18
	SUBMITTED FOR REVIEW	02/02/18

PHX SKY TRAIN
CITY OF PHOENIX AVIATION DEPARTMENT

PHX SKY TRAIN
STAGE 2 DESIGN
500 S 24TH STREET
PHOENIX, AZ 85034

Designed by:	ACK
Drawn by:	MWK
Checked by:	SES
Date:	04/13/2018
Dwg scale:	As indicated
CIP No.:	AV10000011
KIVA No.:	07-5204

STAGE 2 - B03 DESIGN SUBMISSION

RCC STATION
STRUCTURAL
DEMO SECTIONS AND DETAILS

Package: B03 - RBSB0132
Sheet Reference No: V1 - 233 of 339

Project Number: 62421
4/11/2018 9:22:30 PM

Local File: AV10000011-S-2-RCSBXX01_R17_A360_detached.rvt
Central File: BIM 360/62421 - Phoenix Sky Train Project - Stage 2/062421_FR01_S_central_R17_A360.rvt

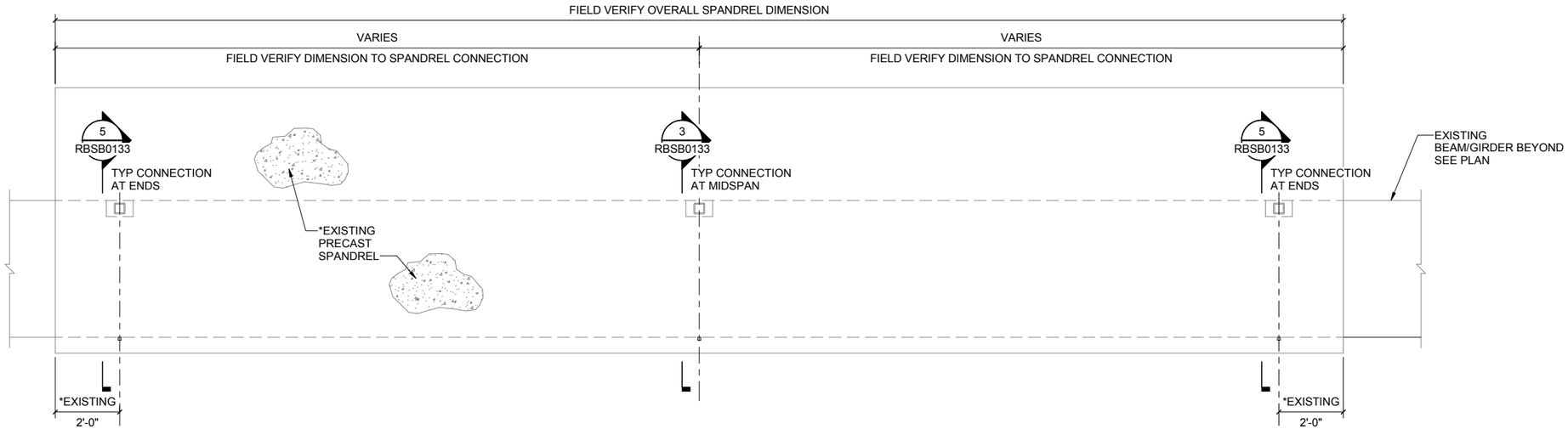

1 RBSB0133 **TYPICAL EXISTING SPANDREL ELEVATION**
SCALE: 1/2" = 1'-0"

NOTE:
* FIELD VERIFY EXISTING SLOPES, ELEVATIONS, DIMENSIONS AND CONFIGURATIONS.

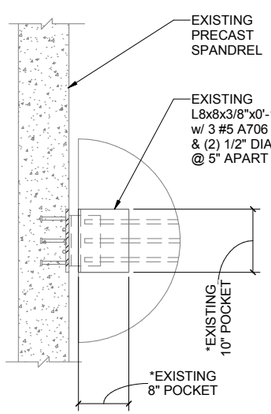

2 RBSB0133 **PLAN VIEW DETAIL**
SCALE: 1" = 1'-0"

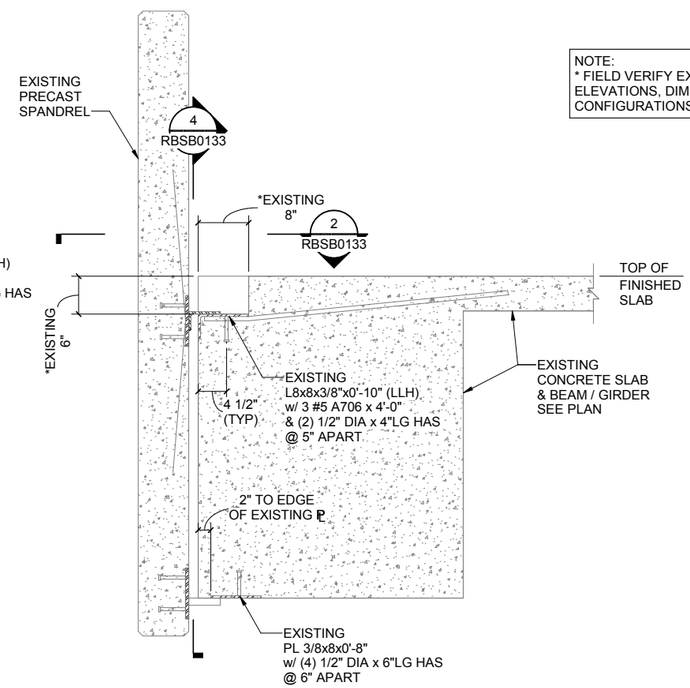

ALL CONNECTIONS TO BE FIELD VERIFIED

3 RBSB0133 **EXISTING PRECAST SPANDREL MIDSPAN CONNECTION**
SCALE: 1" = 1'-0"

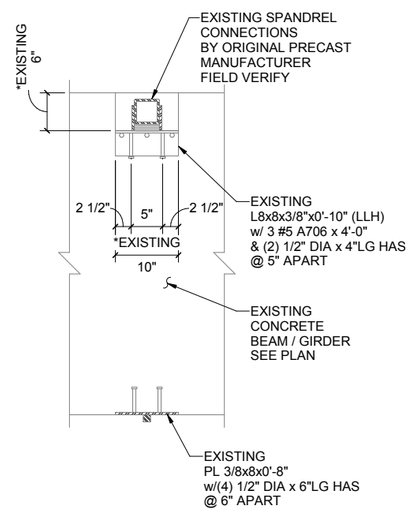

4 RBSB0133 **ELEVATION**
SCALE: 1" = 1'-0"

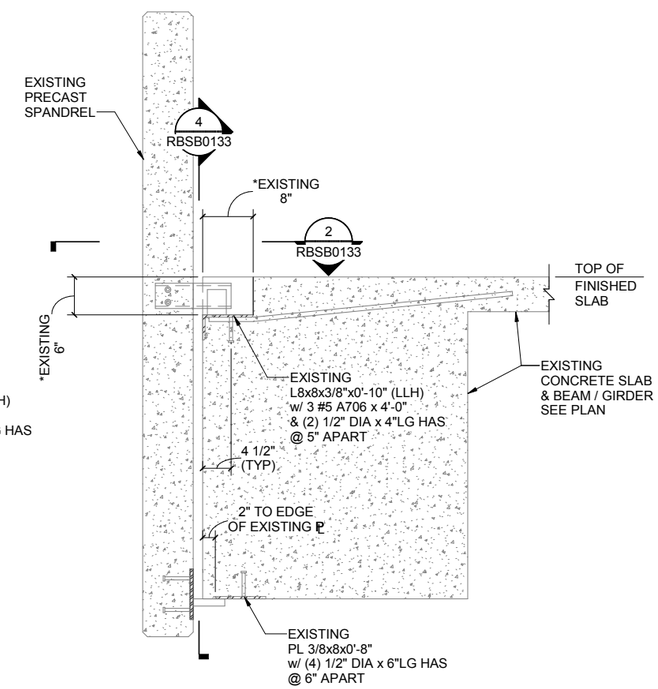

ALL CONNECTIONS TO BE FIELD VERIFIED

5 RBSB0133 **EXISTING PRECAST SPANDREL END CONNECTION**
SCALE: 1" = 1'-0"

Local File: AV10000011-S-2-RCSBXX01_R17_A360_detached.rvt
Central File: BIM 360/62421 - Phoenix Sky Train Project - Stage 2/062421_FR01_S_central_R17_A360.rvt

Project Number: 62421
4/11/2018 9:22:34 PM

Design Consultant

Design Sub-Consultant

Gannett Fleming

PER CITY OF PHOENIX ORDINANCE G-4336, THESE PLANS ARE FOR OFFICIAL USE ONLY AND MAY NOT BE SHARED WITH OTHERS EXCEPT AS REQUIRED TO FULFILL THE OBLIGATION OF YOUR CONTRACT WITH THE CITY OF PHOENIX

NO.	REVISIONS / SUBMISSIONS	DATE
	ISSUED FOR CONSTRUCTION	04/13/18
	SUBMITTED FOR REVIEW	02/02/18

PHX SKY TRAIN
CITY OF PHOENIX AVIATION DEPARTMENT

PHX SKY TRAIN
STAGE 2 DESIGN
500 S 24TH STREET
PHOENIX, AZ 85034

Designed by:	ACK
Drawn by:	MWK
Checked by:	SES
Date:	04/13/2018
Dwg scale:	As indicated
CIP No.:	AV10000011
KIVA No.:	07-5204

STAGE 2 - B03 DESIGN SUBMISSION

RCC STATION
STRUCTURAL
DEMO SECTIONS AND DETAILS

Package:
B03 - RBSB0133
V1 - 234 of 339

Sheet Reference No:

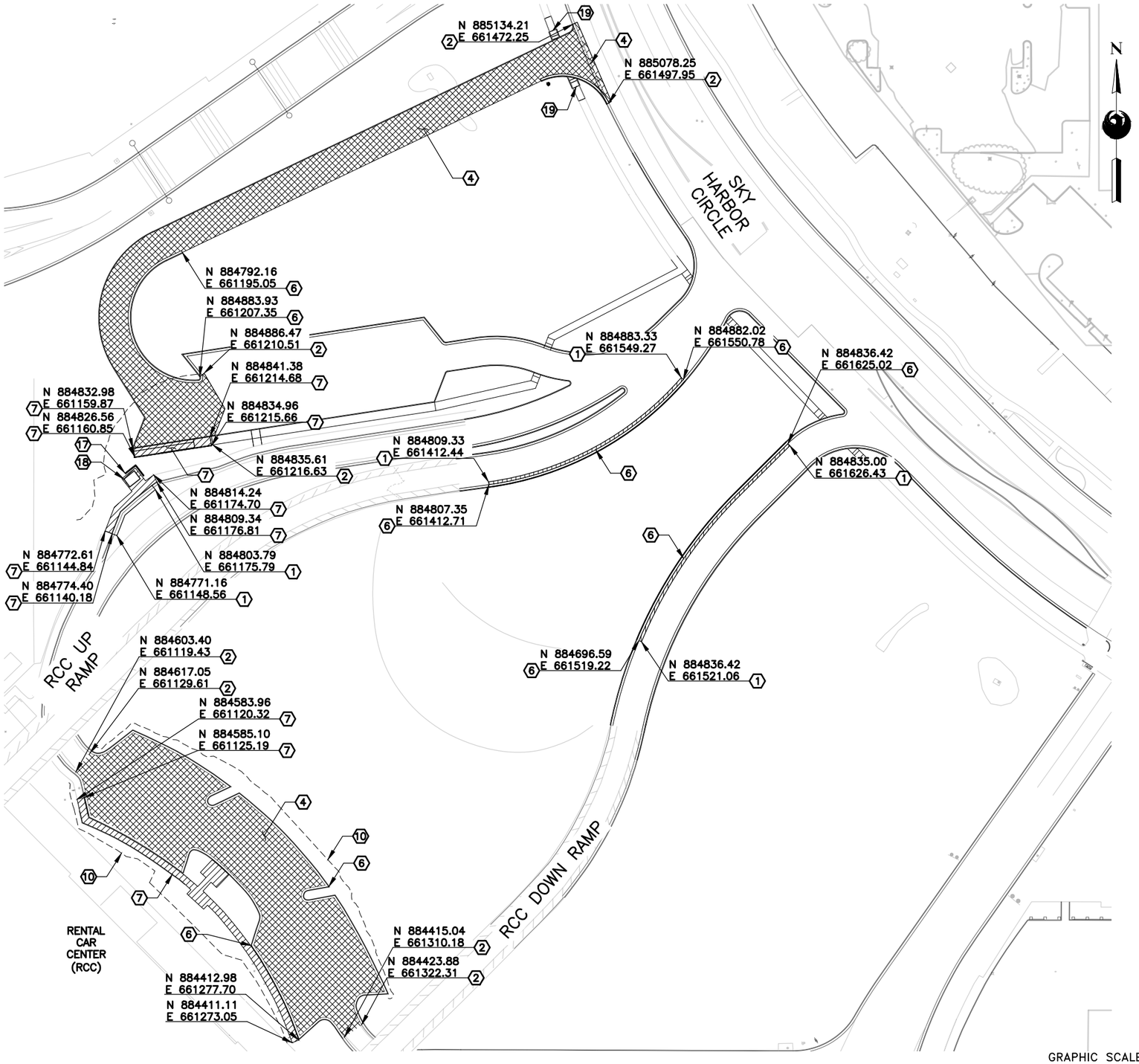

DEMOLITION NOTES

NO	DESCRIPTION	UNIT	QTY
1	SAW CUT EXISTING PCC PAVEMENT (FULL DEPTH)	LF	335
2	SAW CUT EXISTING AC PAVEMENT (FULL DEPTH)	LF	215
3	REMOVE EXISTING PCC PAVEMENT (DEPTH VARIES)	SF	670
4	REMOVE EXISTING AC PAVEMENT (DEPTH VARIES)	SF	27532
6	REMOVE EXISTING CONCRETE CURB AND GUTTER	LF	1137
7	REMOVE CONCRETE SIDEWALK	SF	2190
10	CLEAR, GRUB & REMOVE LANDSCAPING	NPI	
17	REMOVE RETAINING WALL	LF	20
18	REMOVE BUS SHELTER	EA	1
19	REMOVE EXISTING SIDEWALK RAMP	EA	2

NOTES:

1. EXISTING UTILITIES ARE SHOWN IN APPROXIMATE LOCATIONS ONLY. CONTRACTOR SHALL VERIFY EXACT LOCATIONS OF ALL UNDERGROUND UTILITIES PRIOR TO COMMENCING ANY WORK IN ANY AREA. FOR UTILITY REMOVAL AND RELOCATIONS, SEE UTILITY PLANS.
2. NORTHINGS AND EASTINGS WITHIN THIS PLAN SHEET ARE APPROXIMATE, SEE CONSTRUCTION PLANS FOR EXACT LIMITS OF NEW CONSTRUCTION.
3. SIDEWALK SHALL BE REMOVED TO THE NEAREST CONSTRUCTION JOINT.

LEGEND

REMOVE AND DISPOSE EXISTING PCC SIDEWALK PAVEMENT (FULL DEPTH) (VARIES)

REMOVE AND DISPOSE EXISTING AC PAVEMENT (FULL DEPTH) (VARIES)

Call at least two full working days before you begin excavating
ARIZONA 811
Dial 8-1-1 or 1-800-STAKE-IT (782-5348)
In Maricopa County: (602) 263-1100

KEY PLAN

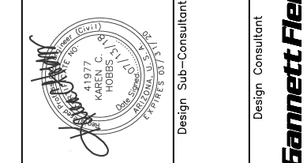

Design Sub-Consultant

Design Consultant
Gannett Fleming

PER CITY OF PHOENIX ORDINANCE G-4390, THESE PLANS ARE FOR OFFICIAL USE ONLY AND MAY NOT BE SHARED WITH OTHERS EXCEPT AS REQUIRED TO FULFILL THE OBLIGATIONS OF YOUR CONTRACT WITH THE CITY OF PHOENIX.

NO.	REVISIONS / SUBMISSIONS	DATE
	ISSUED FOR CONSTRUCTION	07/13/18
	SUBMITTED FOR REVIEW	04/06/18

PHX SKY HARBOR
CITY OF PHOENIX AVIATION DEPARTMENT

PHX SKY TRAIN STAGE 2 DESIGN
500 S. 24TH STREET
PHOENIX, AZ 85034

Designed by: RG
Drawn by: RG
Checked by: KH
Date: 07/13/2018
Dwg scale: 1"=40'
CIP No.: AV100000011
KIVA No.: 07-5204

STAGE 2 – B04 DESIGN SUBMISSION

CIVIL
RCC SITE
DEMOLITION PLAN

Package: Sheet Reference No:
B04 - RSCV0101
V1 - 171 of 286

PLOT DATE: Jul 12, 2018 FILE PATH: C:\pwworking\gfpw01\rgrimes\d0667763\AV100000011-S-2-RSCV0101-B04.dwg rgrimes

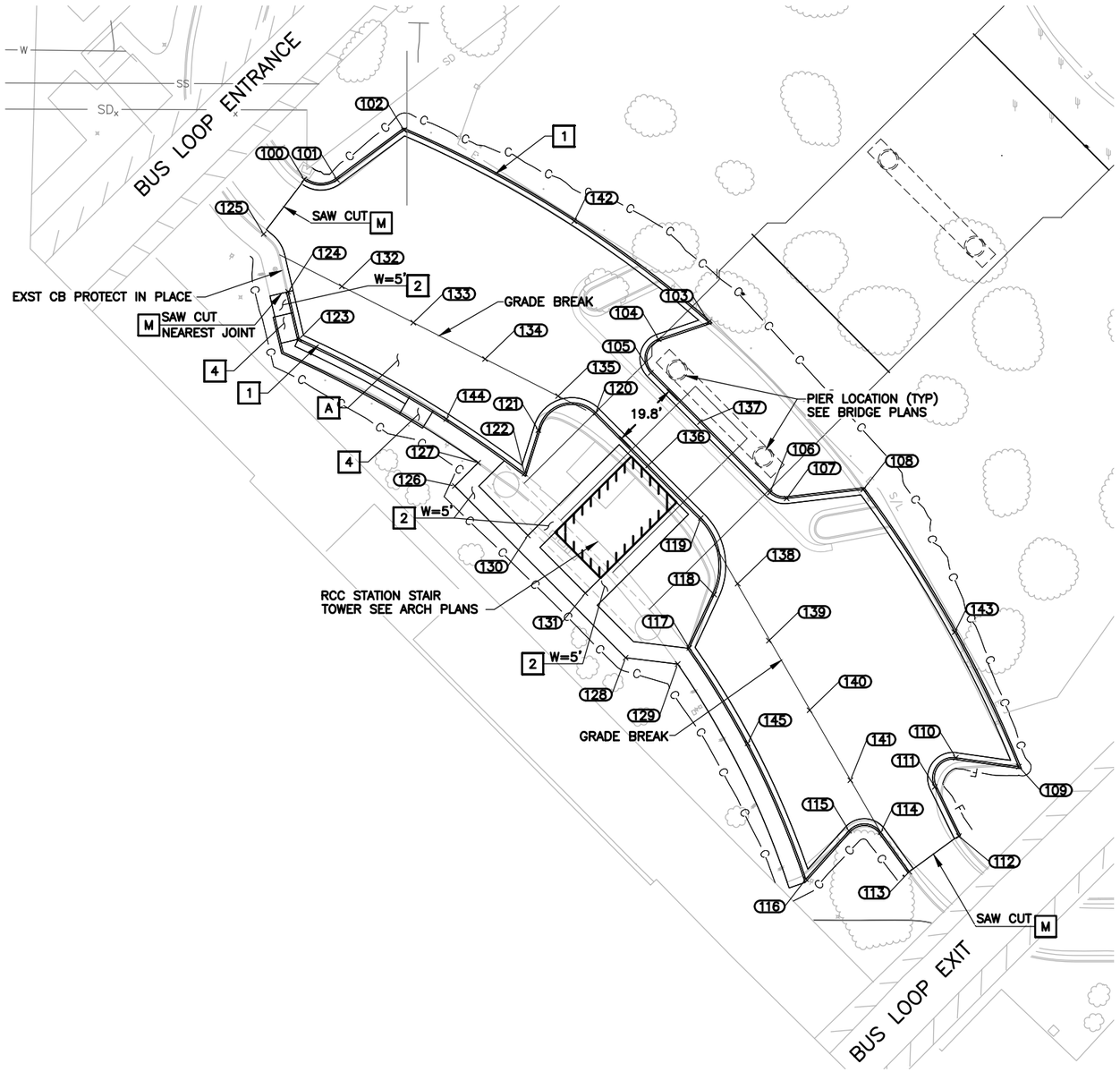

CONSTRUCTION NOTES

NO	DESCRIPTION	UNIT	QTY
A	SUBGRADE PREPARATION	SY	1501
	AGGREGATE BASE COURSE (PSS NO. 2)	SY	1501
	ASPHALTIC CONC SURFACE COURSE (PSS NO. 2)	SY	1501
M	MATCH EXISTING		
1	CURB & GUTTER, MAG DET 220-1 TYPE A, H=6"	LF	721
2	CONCRETE SIDEWALK, COP DET P1230	SF	1675
4	CONCRETE SIDEWALK RAMP, DETAIL A SEE SHEET RSCV0510	EA	1

POINT TABLE

POINT #	DESCRIPTION	NORTHING	EASTING
100	PC	884618.31	661130.43
101	PT	884618.25	661140.09
102	PC	884632.91	661159.85
103	PT	884576.23	661249.78
104	PC	884571.24	661235.03
105	PT	884561.32	661232.70
106	PC	884525.98	661267.83
107	PT	884524.25	661272.78
108	PC	884526.88	661295.39
109	PT	884445.14	661341.27
110	PC	884447.75	661322.71
111	PT	884439.17	661316.49
112	F/C	884424.65	661323.59
113	F/C	884414.15	661308.96
114	PC	884425.78	661300.50
115	PT	884426.24	661291.17
116	PC	884411.96	661278.44
117	PT	884480.15	661244.03
118	PC	884495.88	661251.40
119	PT	884518.49	661247.43
120	PC	884549.51	661216.45
121	PT	884544.39	661199.50
122	PC	884531.58	661195.46
123	PT	884571.27	661128.94
124	POT	884585.22	661125.67

POINT TABLE

POINT #	DESCRIPTION	NORTHING	EASTING
125	PC	884602.24	661118.48
126	SIDEWALK	884527.92	661174.86
127	SIDEWALK	884534.77	661181.75
128	SIDEWALK	884477.25	661225.26
129	SIDEWALK	884475.40	661240.64
130	SIDEWALK	884513.32	661196.43
131	SIDEWALK	884496.30	661213.36
132	GB	884586.79	661141.53
133	GB	884576.10	661162.62
134	GB	884565.37	661183.79
135	GB	884554.46	661205.34
136	GB	884534.00	661231.94
137	GB	884546.77	661247.17
138	GB	884499.13	661258.35
139	GB	884482.31	661267.55
140	GB	884461.77	661279.52
141	GB	884441.11	661291.57
142	POC	884606.05	661210.07
143	POC	884484.78	661322.34
144	POC	884547.71	661172.32
145	POC	884452.01	661261.27

GRAPHIC SCALE

20 0 10 20 40

(IN FEET)

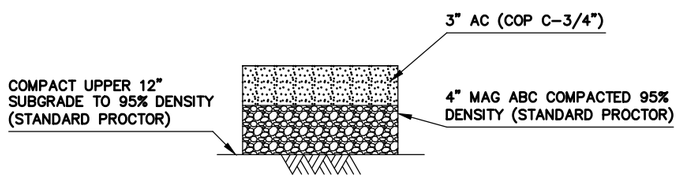

PAVEMENT STRUCTURAL SECTION NO. 2

NOTE: PAVEMENT SECTION TO MATCH EXISTING

NOTES:

1. ALL STATIONS, OFFSETS & RADII ARE REFERENCED TO THE FACE OF CURB UNLESS NOTED OTHERWISE.
2. SEE B04-RSCV0507 FOR CORRESPONDING ELEVATION DATA AND CURVE DATA.

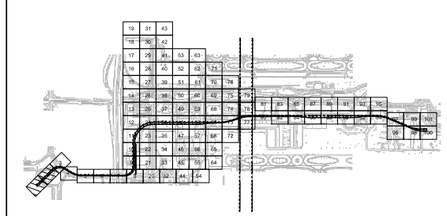

KEY PLAN

Design Consultant

Gannett Fleming

Design Sub-Consultant

PER CITY OF PHOENIX ORDINANCE G-4390, THESE PLANS ARE FOR OFFICIAL USE ONLY AND MAY NOT BE SHARED WITH OTHERS EXCEPT AS REQUIRED TO FULFILL THE OBLIGATIONS OF YOUR CONTRACT WITH THE CITY OF PHOENIX.

NO.	REVISIONS / SUBMISSIONS	DATE
	ISSUED FOR CONSTRUCTION	07/13/18
	SUBMITTED FOR REVIEW	04/06/18

PHX SKY TRAIN
CITY OF PHOENIX AVIATION DEPARTMENT

PHX SKY TRAIN STAGE 2 DESIGN 500 S. 24TH STREET PHOENIX, AZ 85034

Designed by: DS
Drawn by: DS
Checked by: KCH
Date: 07/13/2018
Dwg scale: 1"=20'
CIP No.: AV10000011
KIVA No.: 07-5204

STAGE 2 – B04 DESIGN SUBMISSION

CIVIL RCC SITE PARKING LOT PLAN

Package: Sheet Reference No:

B04 - RSCV0303

PLOT DATE: Jul 11, 2018 FILE PATH: C:\pwworking\gfpw01\rgrimes\d0667763\AV10000011-S-2-RSCV0303.dwg rgrimes

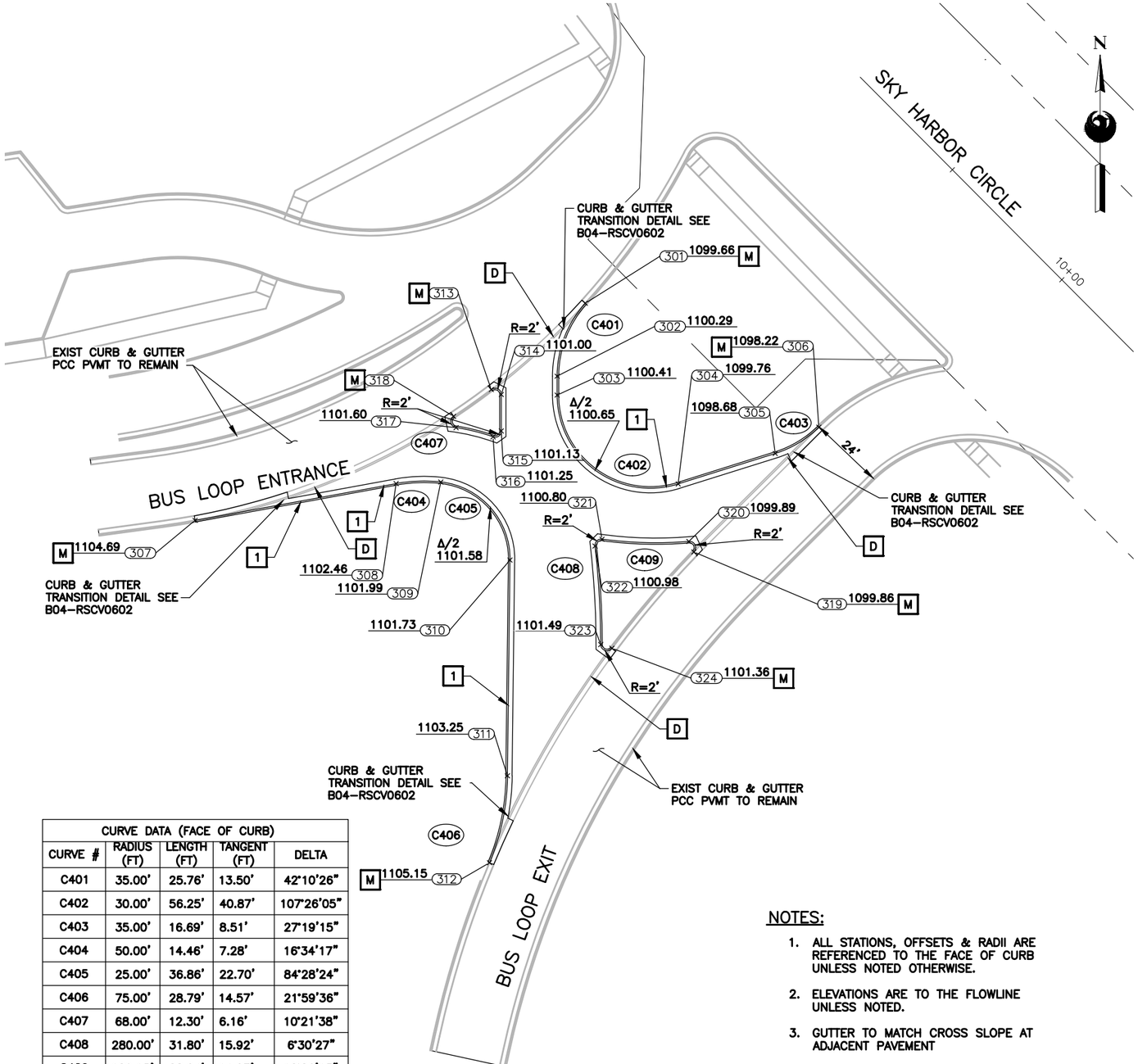

CONSTRUCTION NOTES

NO	DESCRIPTION	UNIT	QTY
B	SUBGRADE PREPARATION	SY	491
	AGGREGATE BASE COURSE	SY	491
	PORTLAND CEMENT CONCRETE PAVEMENT, CLASS A, 8" THICK	SY	491
M	MATCH EXISTING		
D	FOR CURB & GUTTER REMOVAL SEE DEMOLITION PLAN		
1	CURB & GUTTER, MAG DET 220–1 TYPE A, H=6"	LF	466

POINT TABLE			
POINT #	DESCRIPTION	NORTHING	EASTING
301	PC	884877.43	661548.71
302	PT	884853.93	661539.65
303	PC	884847.85	661539.65
304	PT	884819.22	661578.64
305	PC	884829.04	661609.90
306	POC	884837.48	661623.96
307	POT	884807.47	661423.00
308	PC	884819.31	661487.75
309	PCC	884819.84	661502.16
310	PT	884794.69	661524.45
311	PC	884725.17	661523.63
312	PT	884697.17	661517.83
313	PC	884849.63	661518.44
314	PT	884848.04	661521.65
315	PC	884836.28	661521.65
316	PRC	884834.39	661518.99
317	PRC	884837.34	661507.08
318	PRC	884840.99	661506.28
319	PRC	884797.30	661583.69
320	PRC	884800.68	661582.08
321	PRC	884801.40	661554.11
322	PRC	884799.19	661551.86
323	PRC	884767.46	661553.69
324	PRC	884766.27	661557.29

CURVE DATA (FACE OF CURB)				
CURVE #	RADIUS (FT)	LENGTH (FT)	TANGENT (FT)	DELTA
C401	35.00'	25.76'	13.50'	42°10'26"
C402	30.00'	56.25'	40.87'	107°26'05"
C403	35.00'	16.69'	8.51'	27°19'15"
C404	50.00'	14.46'	7.28'	16°34'17"
C405	25.00'	36.86'	22.70'	84°28'24"
C406	75.00'	28.79'	14.57'	21°59'36"
C407	68.00'	12.30'	6.16'	10°21'38"
C408	280.00'	31.80'	15.92'	6°30'27"
C409	129.15'	28.04'	14.07'	12°26'13"

NOTES:

1. ALL STATIONS, OFFSETS & RADII ARE REFERENCED TO THE FACE OF CURB UNLESS NOTED OTHERWISE.
2. ELEVATIONS ARE TO THE FLOWLINE UNLESS NOTED.
3. GUTTER TO MATCH CROSS SLOPE AT ADJACENT PAVEMENT

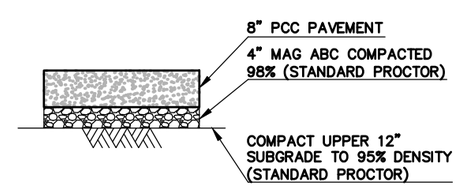

PAVEMENT STRUCTURAL SECTION NO. 1

GRAPHIC SCALE
20 0 10 20 40
(IN FEET)

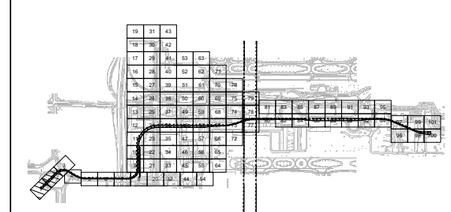

KEY PLAN

NO.	REVISIONS / SUBMISSIONS	DATE
	ISSUED FOR CONSTRUCTION	07/13/18
	SUBMITTED FOR REVIEW	04/06/18

Design Sub-Consultant

Design Consultant
Gannett Fleming

PHX DVT BYR
CITY OF PHOENIX AVIATION DEPARTMENT

PHX SKY TRAIN STAGE 2 DESIGN
500 S. 24TH STREET PHOENIX, AZ 85034

Designed by: DS
Drawn by: DS
Checked by: KCH
Date: 07/13/2018
Dwg scale: 1"=20'
CIP No.: AV10000011
KIVA No.: 07-5204

STAGE 2 – B04 DESIGN SUBMISSION

CIVIL
RCC SITE
ENTRANCE CROSSOVER PLAN

Package: B04
Sheet Reference No: RSCV0506

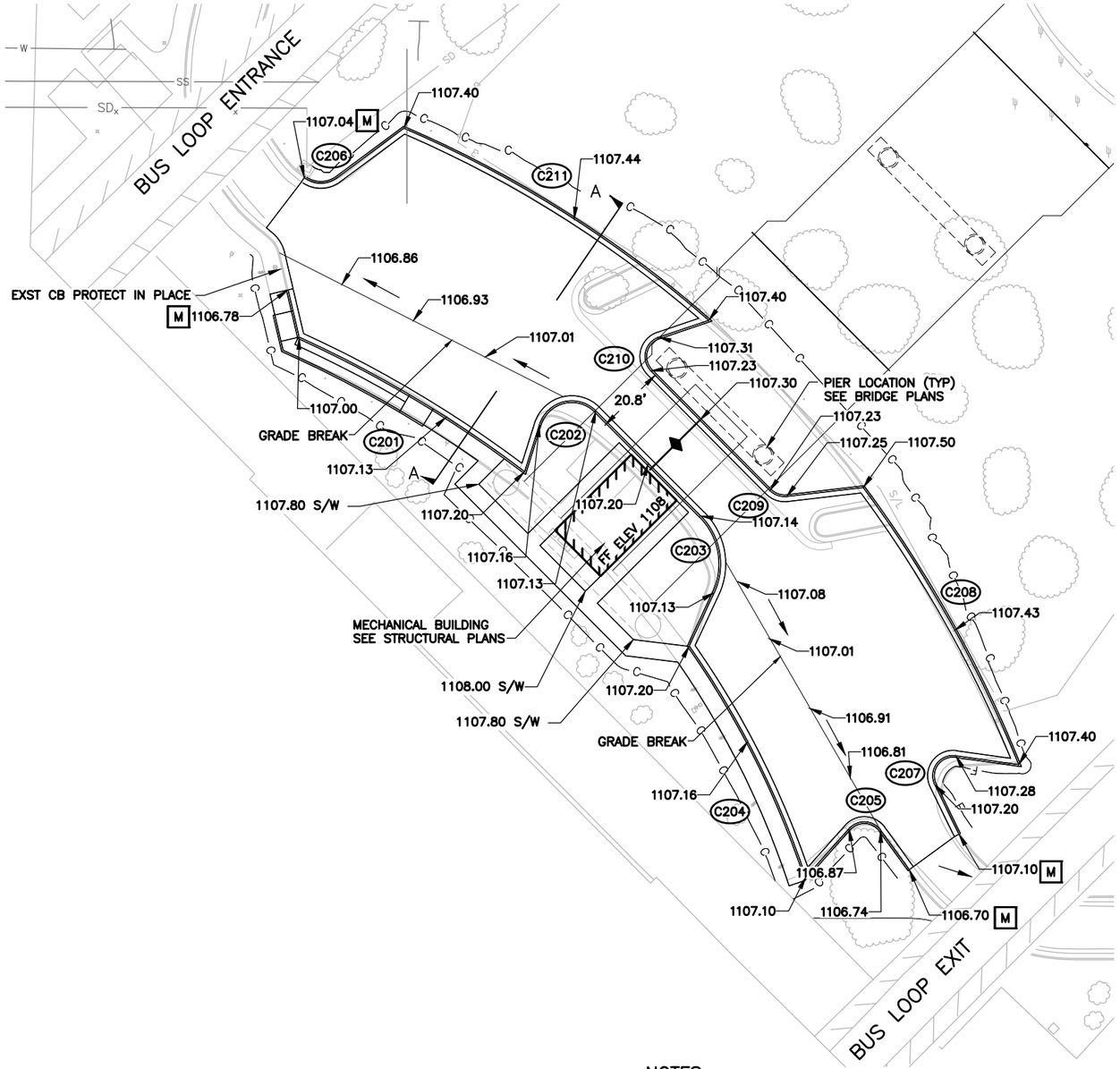

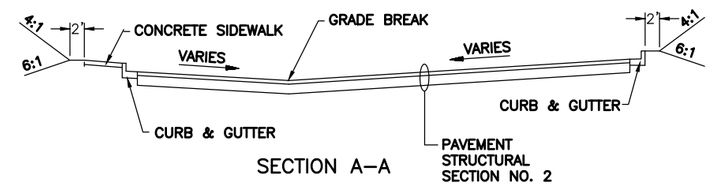

SECTION A–A

CURVE DATA (FACE OF CURB)				
CURVE #	LENGTH (FT)	RADIUS (FT)	TANGENT (FT)	DELTA
C201	77.62	350.87	38.97	12°40'31"
C202	20.51	10.00	16.48	117°30'50"
C203	24.45	20.00	14.01	70°01'23"
C204	76.65	264.35	38.60	16°36'47"
C205	10.71	6.00	7.45	102°16'42"
C206	9.75	8.00	5.58	69°48'55"
C207	13.00	6.00	11.31	129°05'36"
C208	94.00	367.28	47.26	14°39'51"
C209	5.43	6.00	2.91	51°48'32"
C210	12.16	6.00	9.63	116°09'05"
C211	106.74	341.66	53.81	17°54'01"

GRAPHIC SCALE

20 0 10 20 40

(IN FEET)

NOTES:

1. ALL STATIONS, OFFSETS & RADII ARE REFERENCED TO THE FACE OF CURB UNLESS NOTED OTHERWISE.
2. ELEVATIONS ARE TO THE FLOWLINE/PAVEMENT UNLESS NOTED.
3. GUTTER TO MATCH CROSS SLOPE AT ADJACENT PAVEMENT
4. SEE B04–RSCV0303 FOR HORIZONTAL CONTROL.
5. ELEVATIONS SHOWN CORRESPOND TO POINTS SHOWN ON B04–RSCV0303.

M MATCH EXISTING

HIGH POINT

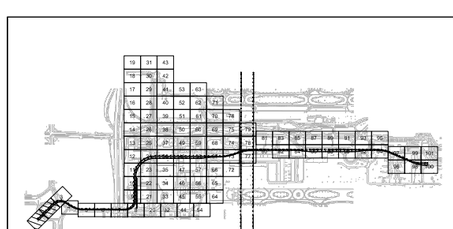

KEY PLAN

PER CITY OF PHOENIX ORDINANCE G-4390, THESE PLANS ARE FOR OFFICIAL USE ONLY AND MAY NOT BE SHARED WITH OTHERS EXCEPT AS REQUIRED TO FULFILL THE OBLIGATIONS OF YOUR CONTRACT WITH THE CITY OF PHOENIX.

NO.	REVISIONS / SUBMISSIONS	DATE
	ISSUED FOR CONSTRUCTION	07/13/18
	SUBMITTED FOR REVIEW	04/06/18

Design Consultant

Gannett Fleming

Design Sub-Consultant

PHX DVT FYR

CITY OF PHOENIX AVIATION DEPARTMENT

PHX SKY TRAIN STAGE 2 DESIGN

500 S. 24TH STREET
PHOENIX, AZ 85034

Designed by: DS
Drawn by: DS
Checked by: KCH
Date: 07/13/2018
Dwg scale: 1"=20'
CIP No.: AV10000011
KIVA No.: 07-5204

STAGE 2 – B04 DESIGN SUBMISSION

CIVIL
RCC SITE
PARKING LOT STAKING PLAN

Package: Sheet Reference No:

B04-RSCV0507

PLOT DATE: Jul 13, 2018 FILE PATH: C:\pwworking\gfpw01\rgrimes\d0667763\AV10000011-S-2-RSCV0507.dwg rgrimes

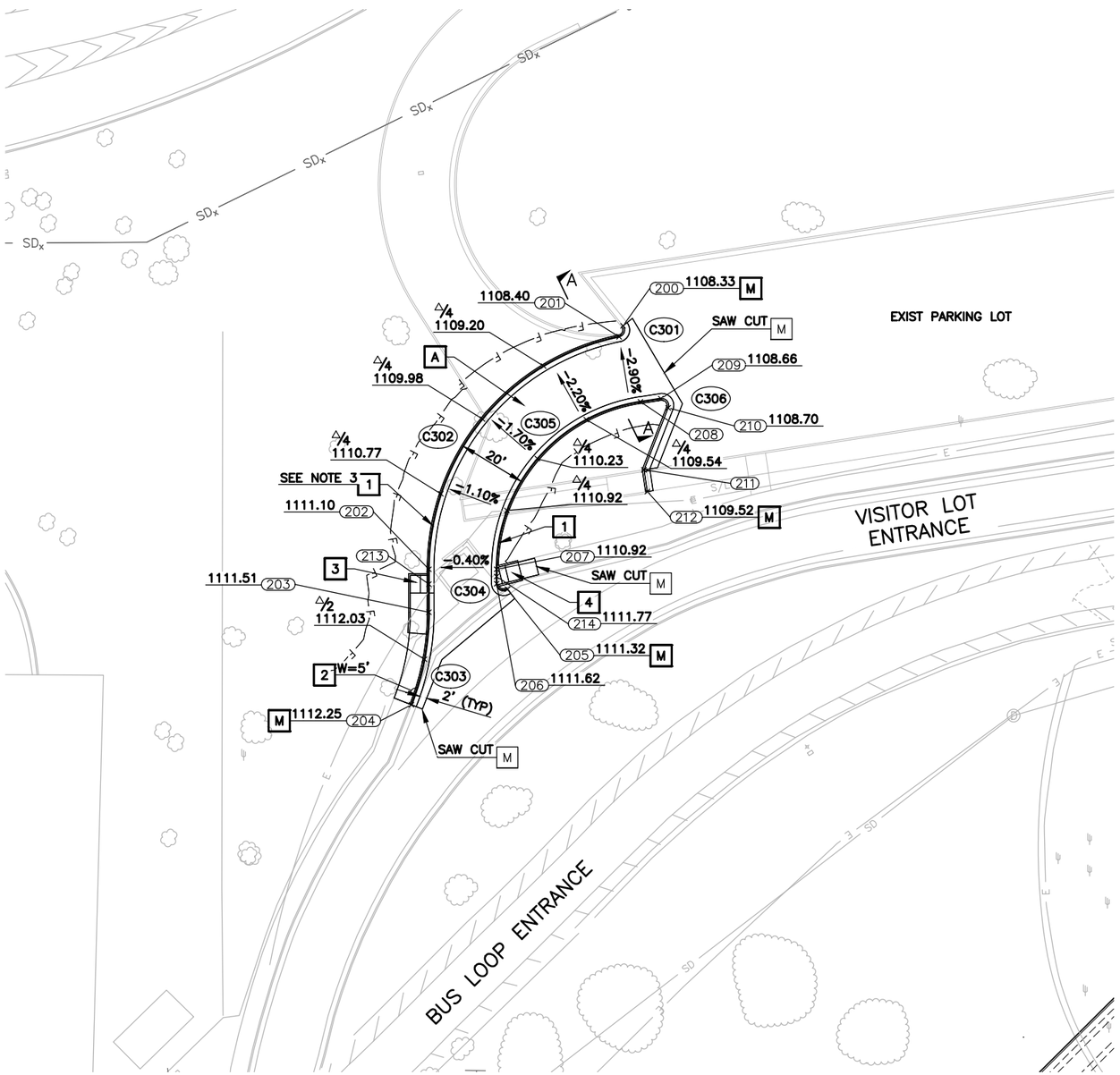

CONSTRUCTION NOTES

NO	DESCRIPTION	UNIT	QTY
A	SUBGRADE PREPARATION	SY	231
	AGGREGATE BASE COURSE (PSS NO. 2)	SY	231
	ASPHALTIC CONC SURFACE COURSE (PSS NO. 2)	SY	231
M	MATCH EXISTING		
1	CURB & GUTTER, MAG DET 220-1 TYPE A, H=6"	LF	259
2	CONCRETE SIDEWALK, COP DET P1230	SF	103
3	CONCRETE SIDEWALK RAMP ADOT DET C-10.05, TYPE C	EA	1
4	CONCRETE SIDEWALK RAMP DET A, SEE SHEET B04-TSCV 1203	EA	1

POINT TABLE

POINT #	DESCRIPTION	NORTHING	EASTING
200	PC	884884.25	661207.74
201	PRC	884881.03	661206.57
202	PT	884812.42	661150.45
203	PC	884799.74	661150.45
204	PT	884772.43	661145.30
205	PC	884806.53	661173.63
206	PT	884808.15	661170.45
207	PC	884812.42	661170.45
208	PT	884861.85	661212.88
209	PC	884862.77	661218.89
210	PT	884860.06	661221.06
211	EXST S/W	884841.77	661213.93
212	EXST S/W	884835.35	661214.91
213	RAMP ℄	884808.03	661150.45
214	RAMP ℄	884810.28	661170.45

CURVE DATA (FACE OF CURB)

CURVE #	RADIUS	LENGTH	TANGENT	DELTA
C301	2.00'	4.09'	3.28'	117°16'47"
C302	70.00'	95.99'	57.26'	078°33'57"
C303	75.00'	27.95'	14.14'	021°21'10"
C304	2.00'	4.40'	3.92'	125°58'32"
C305	50.00'	70.94'	42.92'	081°17'11"
C306	2.00'	4.19'	3.46'	120°00'00"

GRAPHIC SCALE
20 0 10 20 40
(IN FEET)

Call at least two full working days before you begin excavation. ARIZONA 811 Blue Stake, Inc. Dial 8-1-1 or 1-800-STAKE-IT (782-5348) In Maricopa County: (602) 263-1100

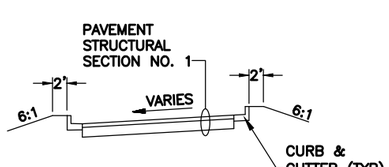

SECTION A–A

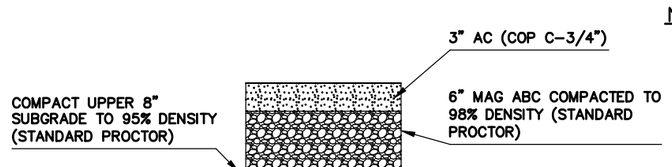

PAVEMENT STRUCTURAL SECTION NO. 2

NOTES:

1. ALL STATIONS, OFFSETS & RADII ARE REFERENCED TO THE FACE OF CURB UNLESS NOTED OTHERWISE.
2. ELEVATIONS ARE TO THE FLOWLINE/PAVEMENT UNLESS NOTED.
3. GUTTER TO MATCH CROSS SLOPE AT ADJACENT PAVEMENT

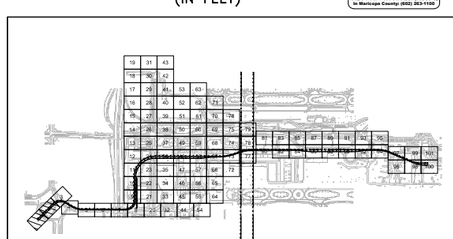

KEY PLAN

PER CITY OF PHOENIX ORDINANCE G-4390, THESE PLANS ARE FOR OFFICIAL USE ONLY AND MAY NOT BE SHARED WITH OTHERS EXCEPT AS REQUIRED TO FULFILL THE OBLIGATIONS OF YOUR CONTRACT WITH THE CITY OF PHOENIX.

NO.	REVISIONS / SUBMISSIONS	DATE
	ISSUED FOR CONSTRUCTION	07/13/18
	SUBMITTED FOR REVIEW	04/06/18

Design Sub-Consultant

Design Consultant
Gannett Fleming

PHX DVT BYR
CITY OF PHOENIX AVIATION DEPARTMENT

PHX SKY TRAIN STAGE 2 DESIGN
500 S. 24TH STREET
PHOENIX, AZ 85034

Designed by: DS
Drawn by: DS
Checked by: KCH
Date: 07/13/2018
Dwg scale: 1"=20'
CIP No.: AV10000011
KIVA No.: 07-5204

STAGE 2 – B04 DESIGN SUBMISSION

CIVIL
RCC SITE
TEMPORARY PARKING LOT
DRIVEWAY PLAN

Package: Sheet Reference No:
B04 - RSCV0508

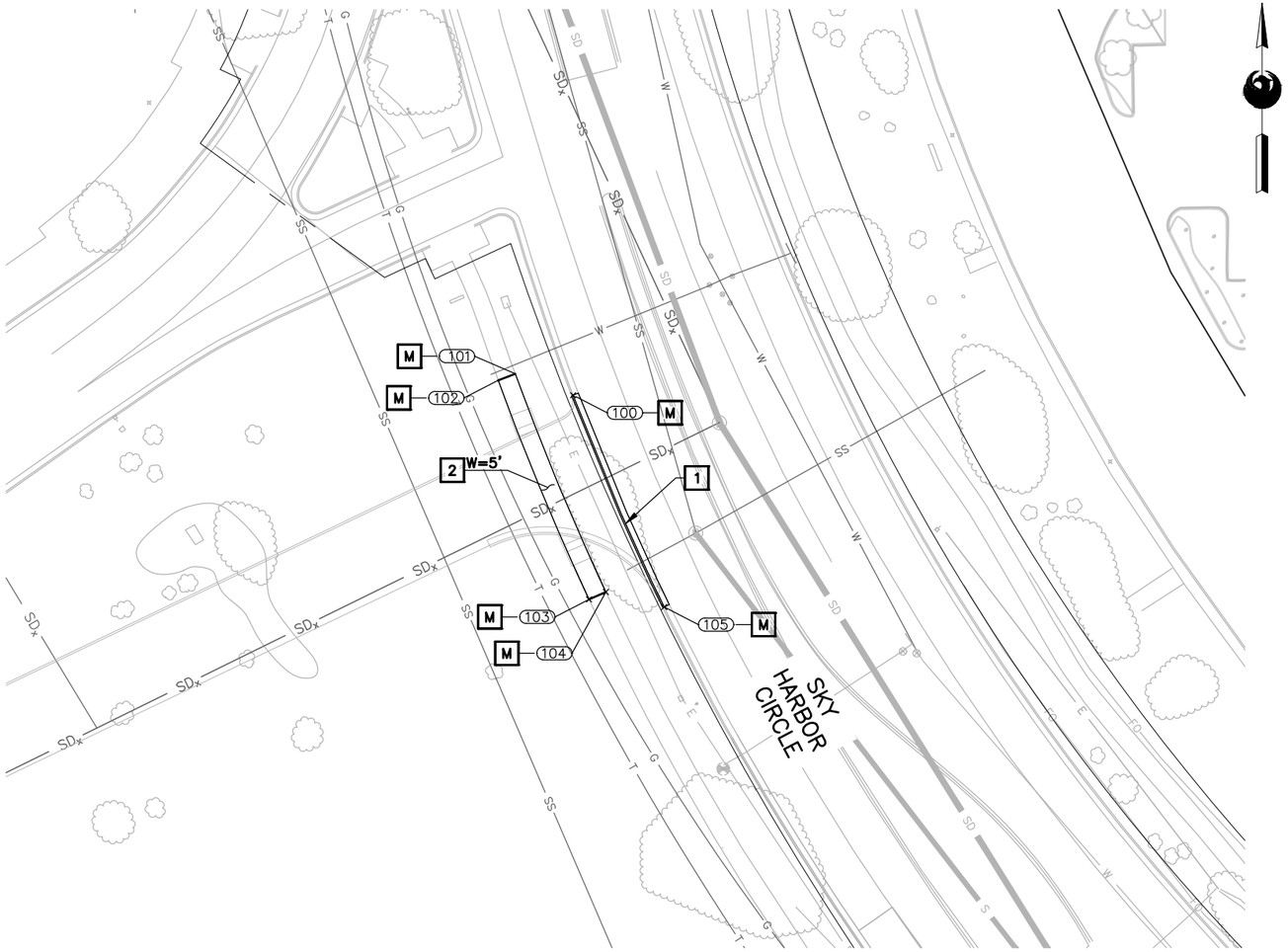

CONSTRUCTION NOTES

NO	DESCRIPTION	UNIT	QTY
M	MATCH EXISTING		
1	CURB & GUTTER, MAG DET 220-1 TYPE A, H=6"	LF	62
2	CONCRETE SIDEWALK, COP DET P1230	SF	315

POINT TABLE		
POINT #	NORTHING	EASTING
100	885134.21	661472.25
101	885139.96	661456.81
102	885138.21	661452.26
103	885079.64	661476.51
104	885081.62	661481.00
105	885077.60	661496.00

GRAPHIC SCALE

20 0 10 20 40

(IN FEET)

NOTES:

1. ALL STATIONS, OFFSETS & RADII ARE REFERENCED TO THE FACE OF CURB UNLESS NOTED OTHERWISE.
2. ELEVATIONS ARE TO THE FLOWLINE/PAVEMENT UNLESS NOTED.
3. GUTTER TO MATCH CROSS SLOPE AT ADJACENT PAVEMENT

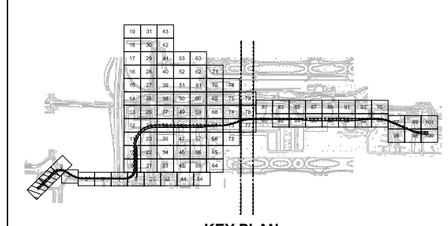

KEY PLAN

PER CITY OF PHOENIX ORDINANCE G-4390, THESE PLANS ARE FOR OFFICIAL USE ONLY AND MAY NOT BE SHARED WITH OTHERS EXCEPT AS REQUIRED TO FULFILL THE OBLIGATIONS OF YOUR CONTRACT WITH THE CITY OF PHOENIX.

NO.	REVISIONS / SUBMISSIONS	DATE
	ISSUED FOR CONSTRUCTION	07/13/18
	SUBMITTED FOR REVIEW	04/06/18

Design Sub-Consultant

Design Consultant

Gannett Fleming

PHX SKY TRAIN
STAGE 2 DESIGN
500 S. 24TH STREET
PHOENIX, AZ 85034

PHX SKY HARBOR CITY OF PHOENIX AVIATION DEPARTMENT

Designed by: DS
Drawn by: DS
Checked by: KCH
Date: 07/13/2018
Dwg scale: 1"=20'
CIP No.: AV10000011
KIVA No.: 07-5204

STAGE 2 – B04 DESIGN SUBMISSION

CIVIL
RCC SITE
SKY HARBOR CIRCLE STAKING PLAN
DRIVEWAY PLAN

Package: B04 Sheet Reference No: RSCV0509

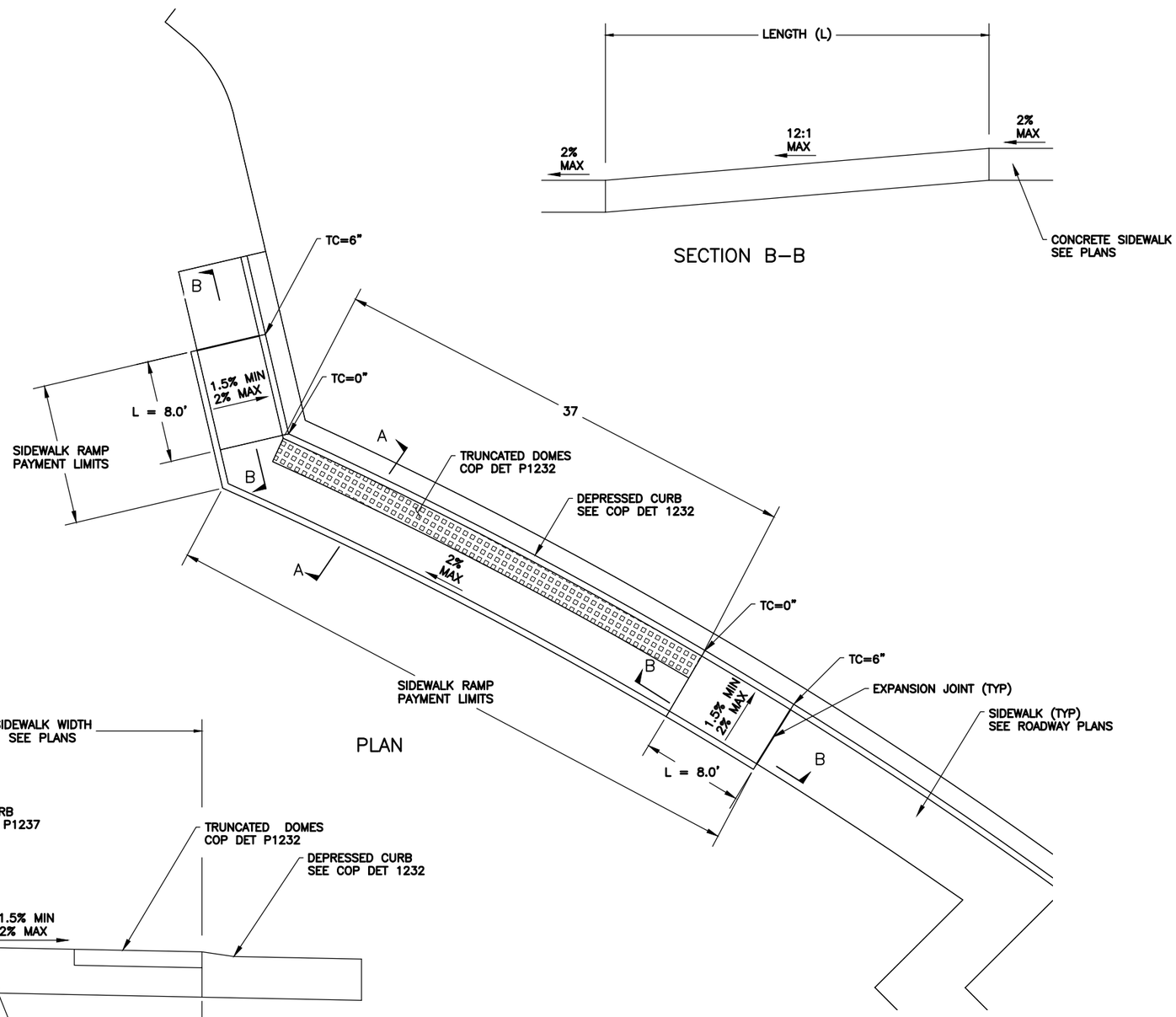

NOTES:

1. FOR NOTES AND DETAILS NOT SHOWN SEE COP DET P1237.

GRAPHIC SCALE

5 0 2.5 5 10

(IN FEET)

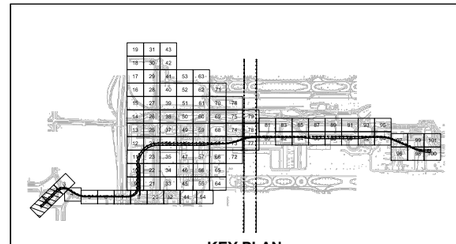

KEY PLAN

PER CITY OF PHOENIX ORDINANCE G-4390, THESE PLANS ARE FOR OFFICIAL USE ONLY AND MAY NOT BE SHARED WITH OTHERS EXCEPT AS REQUIRED TO FULFILL THE OBLIGATIONS OF YOUR CONTRACT WITH THE CITY OF PHOENIX.

NO.	REVISIONS / SUBMISSIONS	DATE
	ISSUED FOR CONSTRUCTION	07/13/18
	SUBMITTED FOR REVIEW	04/06/18

Design Sub-Consultant

Design Consultant

Gannett Fleming

PHX SKY TRAIN
STAGE 2 DESIGN
500 S. 24TH STREET
PHOENIX, AZ 85034

CITY OF PHOENIX AVIATION DEPARTMENT

Designed by: DS
Drawn by: DS
Checked by: KCH
Date: 07/13/2018
Dwg scale: 1"=20'
CIP No.: AV10000011
KIVA No.: 07-5204

STAGE 2 – B04 DESIGN SUBMISSION

CIVIL
RCC SITE
PARKING LOT SIDEWALK
RAMP DETAIL

Package: B04 Sheet Reference No: RSCV0510

PLOT DATE: Jul 13, 2018 FILE PATH: C:\pwworking\gfpw01\rgrimes\d0667763\AV10000011-S-2-RSCV0510.dwg rgrimes

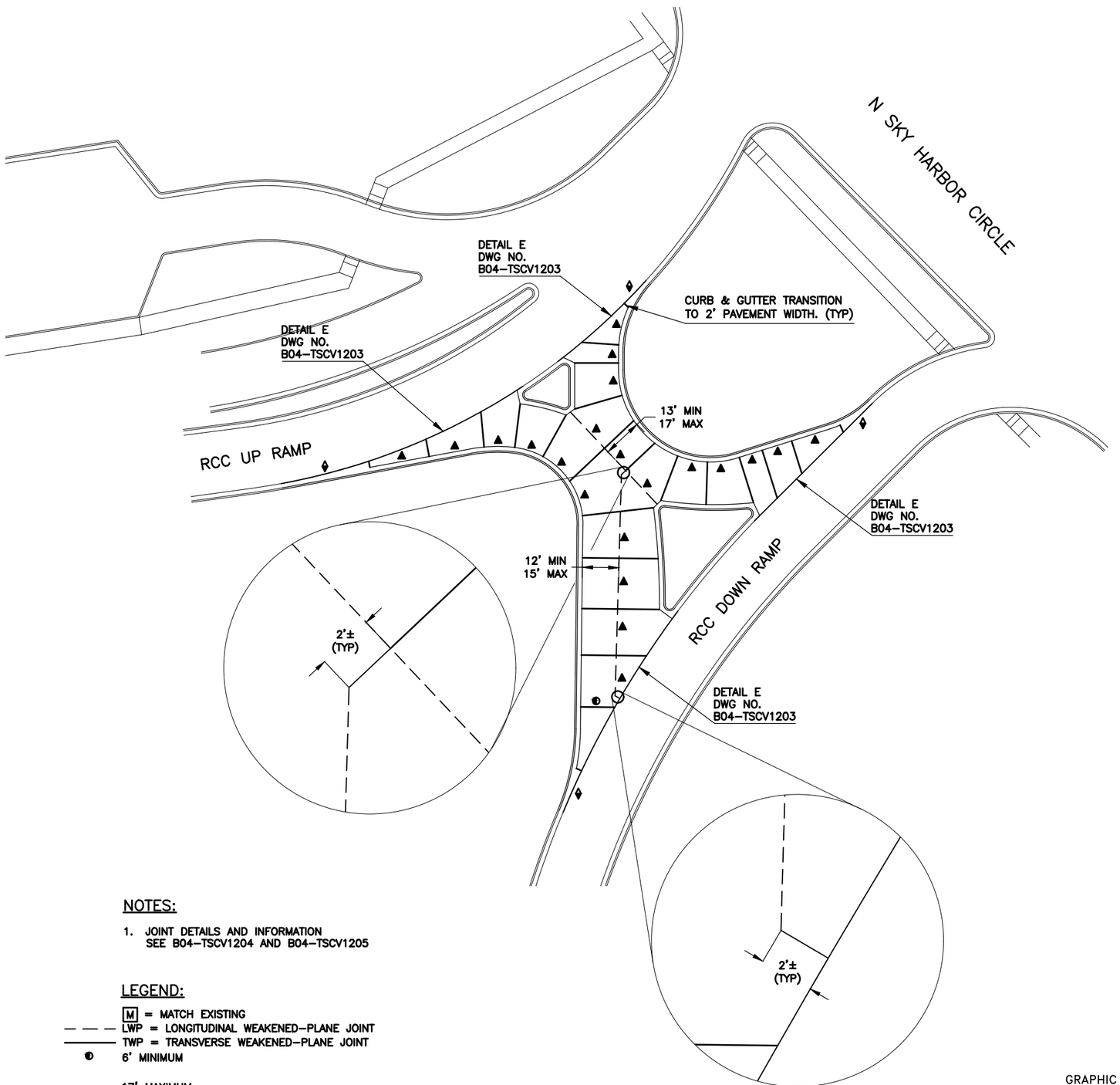

NOTES:

1. JOINT DETAILS AND INFORMATION SEE B04–TSCV1204 AND B04–TSCV1205

LEGEND:

- M = MATCH EXISTING
- LWP = LONGITUDINAL WEAKENED–PLANE JOINT
- TWP = TRANSVERSE WEAKENED–PLANE JOINT
- 6' MINIMUM
- 17' MAXIMUM. 6' MINIMUM
- ADOT TYPE 4 CURB TRANSITION. SEE ADOT DWG NO. C–05.12

GRAPHIC SCALE

20 0 10 20 40

(IN FEET)

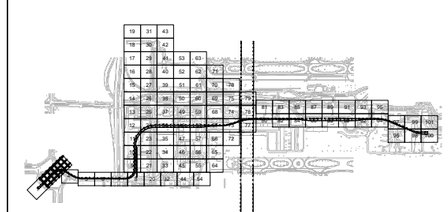

KEY PLAN

Call at least two full working days before you begin excavating
ARIZONA BLUE STAKE, INC.
Know the Line. Use it.
Dial 8-1-1 or 1-800-STAKE IT (782-5348)
In Maricopa County: (602) 263-1100

PER CITY OF PHOENIX ORDINANCE G-4390, THESE PLANS ARE FOR OFFICIAL USE ONLY AND MAY NOT BE SHARED WITH OTHERS EXCEPT AS REQUIRED TO FULFILL THE OBLIGATIONS OF YOUR CONTRACT WITH THE CITY OF PHOENIX.

NO.	REVISIONS / SUBMISSIONS	DATE
	ISSUED FOR CONSTRUCTION	07/13/18
	SUBMITTED FOR REVIEW	04/06/18

Design Sub–Consultant

Design Consultant
Gannett Fleming

PHX DVT BYR
CITY OF PHOENIX AVIATION DEPARTMENT

PHX SKY TRAIN STAGE 2 DESIGN
500 S. 24TH STREET PHOENIX, AZ 85034

Designed by: DS
Drawn by: DS
Checked by: KH
Date: 07/13/2018
Dwg scale: 1" = 20'
CIP No.: AV10000011
KIVA No.: 07–5204

STAGE 2 – B04 DESIGN SUBMISSION

CIVIL
RCC SITE
ENTRANCE CROSSOVER
JOINTING PLAN

Package: Sheet Reference No:
B04 - RSCV0602

PLOT DATE: Jul 11, 2018 FILE PATH: C:\pwworking\gfpw01\dasmith\d0667763\AV10000011-S-2-RSCV0602.dwg dasmith

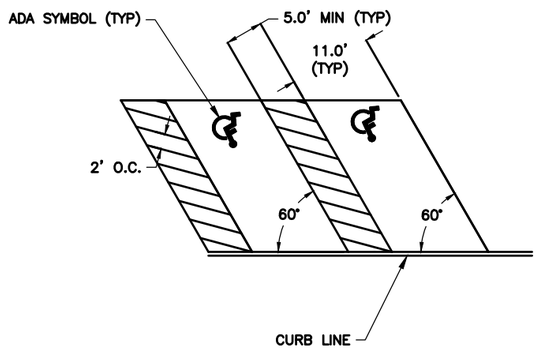

ADA STRIPING DETAIL

1. ALL STRIPING FOR ADA SPACES TO BE 4" SOLID YELLOW.

MARKING GENERAL NOTES

1. ALL PAVEMENT MARKING AND SIGNING MATERIALS AND EQUIPMENT SHALL CONFORM TO THE CITY OF PHOENIX STANDARD DETAILS, MUTCD AND ADOT STANDARD SPECIFICATIONS AND STANDARD DRAWINGS, LATEST EDITIONS.
2. ALL LANE LINE, EDGE LINE, BIKE LANE LINE, CENTERLINE, AND PAINTED MEDIAN STRIPING SHALL BE 60 MIL THICK CITY APPROVED PAINT. ALL STOP BARS AND CROSSWALKS SHALL BE 90 MIL THICK EXTRUDED ALKYD THERMOPLASTIC MARKING MATERIAL.
3. ALL SYMBOLS AND WORD LEGENDS SHALL BE TYPE I PREFORMED PLASTIC PAVEMENT MARKING.
4. THE CONTRACTOR SHALL PAINT ALL RAISED MEDIAN ISLAND NOSES REFLECTORIZED YELLOW, 10 L.F. PAST THE END OF THE MEDIAN ISLANDS.
5. THE LANE WIDTH DIMENSIONS FOR ALL PAVEMENT MARKINGS ARE TO THE CENTER OF THE STRIPING OR, IN THE CASE OF DOUBLE STRIPING, TO THE CENTER OF THE DOUBLE STRIPING, UNLESS OTHERWISE NOTED ON THE PLANS.
6. THE THERMOPLASTIC PAVEMENT MARKINGS SHALL BE PLACED 30 CALENDAR DAYS AFTER THE COMPLETION OF THE FINAL PAVEMENT SURFACE. ALL PREFINAL LANE LINES, EDGE LINES, CROSSWALK AND STOP BARS SHALL BE 4" TEMPORARY TRAFFIC PAINT.
7. THE CONTRACTOR SHALL REMOVE ALL EXISTING PAVEMENT MARKINGS IN CONFLICT WITH PROPOSED PAVEMENT MARKINGS.
8. OBLITERATION OF EXISTING STRIPING & EXISTING RAISED PAVEMENT MARKERS SHALL CONFORM TO 701-3.06 OF THE ADOT STANDARD SPECIFICATIONS.

SIGNING GENERAL NOTES

1. ALL SIGNS SHALL BE MOUNTED AT A HEIGHT OF 7 FEET MEASURED FROM THE BOTTOM OF THE SIGN TO THE TOP OF THE CURB UNLESS OTHERWISE NOTED.

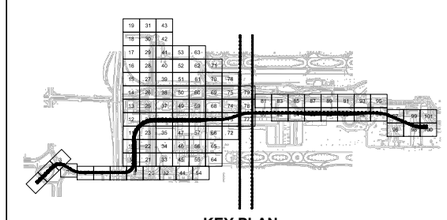

KEY PLAN

Registered Professional Engineer (Civil) CERTIFICATE NO. 41977 KAREN C. HOBBS Date Signed 07/13/18 ARIZONA U.S.A. EXPIRES 03/31/20

Design Sub-Consultant

Design Consultant

Gannett Fleming

NO.	REVISIONS / SUBMISSIONS	DATE
	ISSUED FOR CONSTRUCTION	07/13/18
	SUBMITTED FOR REVIEW	04/06/18

PER CITY OF PHOENIX ORDINANCE G-4390, THESE PLANS ARE FOR OFFICIAL USE ONLY AND MAY NOT BE SHARED WITH OTHERS EXCEPT AS REQUIRED TO FULFILL THE OBLIGATIONS OF YOUR CONTRACT WITH THE CITY OF PHOENIX.

PHX SKY HARBOR
CITY OF PHOENIX AVIATION DEPARTMENT

PHX SKY TRAIN STAGE 2 DESIGN
500 S. 24TH STREET PHOENIX, AZ 85034

Designed by: DS
Drawn by: DS
Checked by: KA
Date: 07/13/2018
Dwg scale: NTS
CIP No.: AV10000011
KIVA No.: 07-5204

STAGE 2 – B04 DESIGN SUBMISSION

CIVIL
RCC SITE
STRIPING & SIGNING
NOTES & DETAILS

Package: B04 - Sheet Reference No: RSCV0803

PLOT DATE: Jul 11, 2018 FILE PATH: C:\pwworking\gfpw01\rgrimes\d0667763\AV10000011-S-2-RSCV0803-04.dwg rgrimes

STRIPING NOTES

NO	DESCRIPTION	UNIT	QTY
1	4" SOLID WHITE STRIPE	LF	701
2	ADA SPACES SEE DETAIL DWG NO. RSCV0803	EA	2
6	R7-8AZ, SIZE 12" X 18"	EA	2

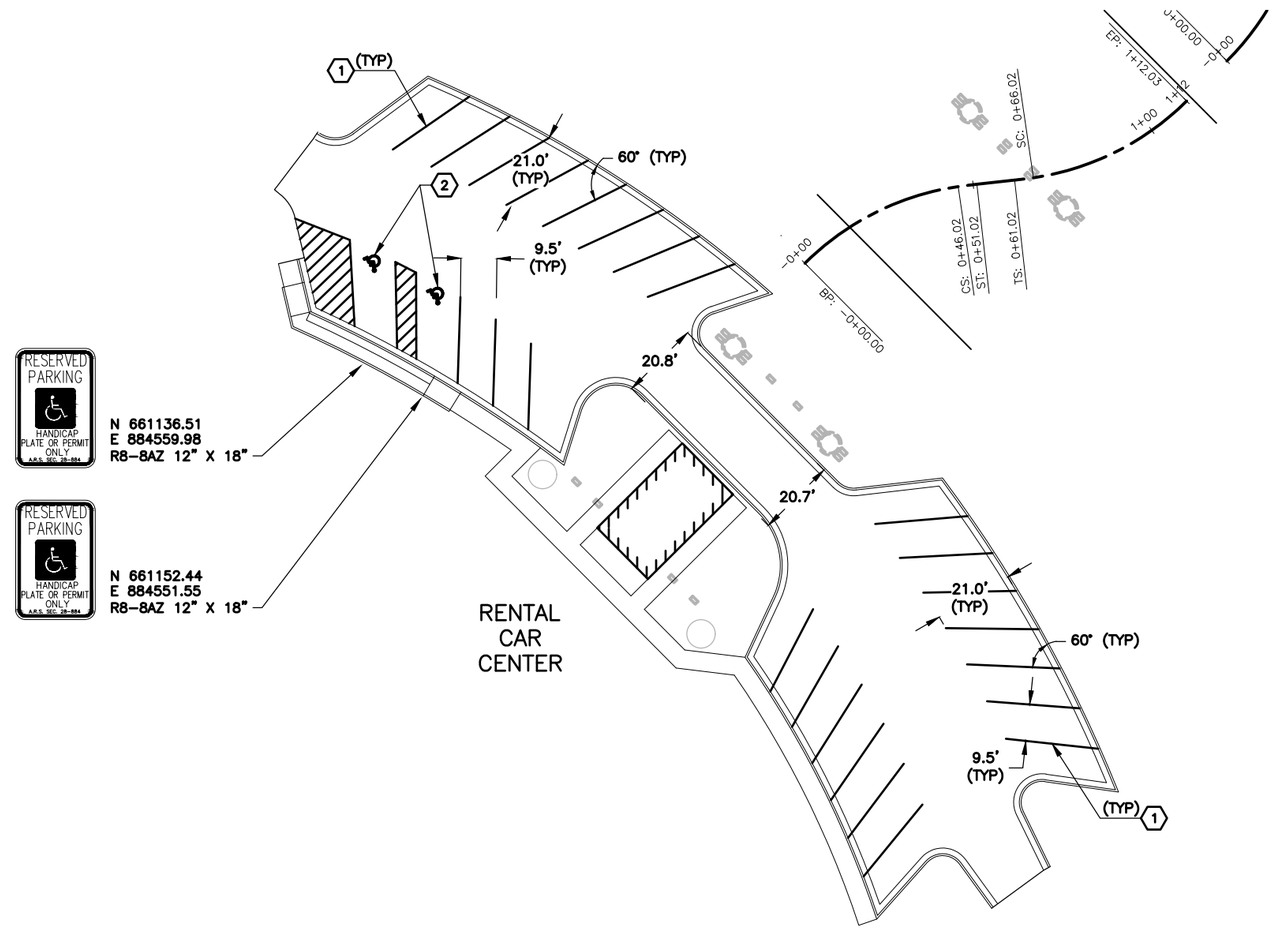

GRAPHIC SCALE
20 0 10 20 40
(IN FEET)

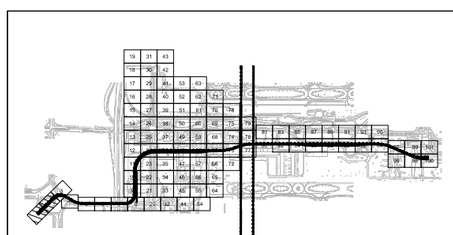

KEY PLAN

PER CITY OF PHOENIX ORDINANCE G-4390, THESE PLANS ARE FOR OFFICIAL USE ONLY AND MAY NOT BE SHARED WITH OTHERS EXCEPT AS REQUIRED TO FULFILL THE OBLIGATIONS OF YOUR CONTRACT WITH THE CITY OF PHOENIX.

NO.	REVISIONS / SUBMISSIONS	DATE
	ISSUED FOR CONSTRUCTION	07/13/18
	SUBMITTED FOR REVIEW	04/06/18

Design Sub-Consultant

Design Consultant
Gannett Fleming

PHX SKY TRAIN
CITY OF PHOENIX AVIATION DEPARTMENT

PHX SKY TRAIN
STAGE 2 DESIGN
500 S. 24TH STREET
PHOENIX, AZ 85034

Designed by: DS
Drawn by: DS
Checked by: KA
Date: 07/13/2018
Dwg scale: 1"=20'
CIP No.: AV10000011
KIVA No.: 07-5204

STAGE 2 – B04 DESIGN SUBMISSION

CIVIL
RCC SITE
STRIPING AND SIGNING PLAN

Package: B04
Sheet Reference No: RSCV0804

PLOT DATE: Jul 12, 2018 FILE PATH: C:\pwworking\gfpw01\rgrimes\d0667763\AV10000011-S-2-RSCV0803-04.dwg rgrimes

STRIPING NOTES

1	12" SOLID WHITE STRIPE, THERMOPLASTIC	LF	69
2	4" SOLID DOUBLE YELLOW STRIPE, THERMOPLASTIC	LF	1031
3	PREFORMED THROUGH ARROW PAVEMENT MARKING	EA	8
4	18" SOLID WHITE STRIPE, THERMOPLASTIC	LF	18
5	R1-1, SIZE 30" X 30"	EA	1

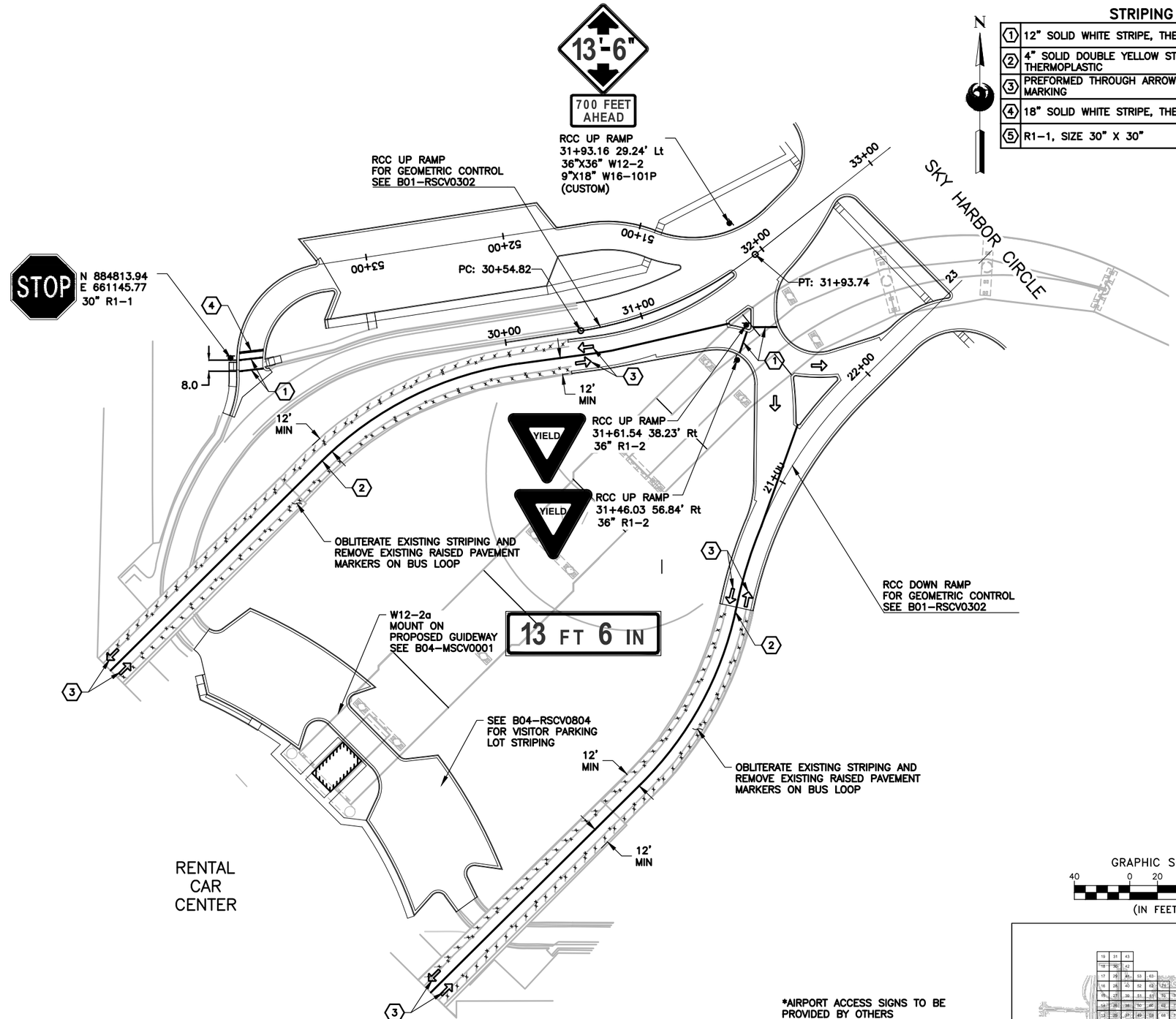

*AIRPORT ACCESS SIGNS TO BE PROVIDED BY OTHERS SEE WAYFINDING PLANS

GRAPHIC SCALE
40 0 20 40 80
(IN FEET)

Call at least two full working days before you begin excavation
ARIZONA BLUE STAKE, INC.
Outside Maricopa County: (602) 263-1100
Inside Maricopa County: (602) 263-1100

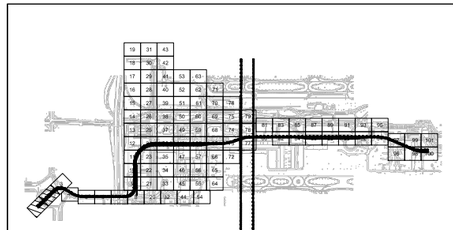

KEY PLAN

Design Sub-Consultant

Design Consultant
Gannett Fleming

PER CITY OF PHOENIX ORDINANCE G-4390, THESE PLANS ARE FOR OFFICIAL USE ONLY AND MAY NOT BE SHARED WITH OTHERS EXCEPT AS REQUIRED TO FULFILL THE OBLIGATIONS OF YOUR CONTRACT WITH THE CITY OF PHOENIX.

NO.	REVISIONS / SUBMISSIONS	DATE
	ISSUED FOR CONSTRUCTION	07/13/18
	SUBMITTED FOR REVIEW	04/06/18

PHX DVT BYR
CITY OF PHOENIX AVIATION DEPARTMENT

PHX SKY TRAIN STAGE 2 DESIGN
500 S. 24TH STREET
PHOENIX, AZ 85034

Designed by: DS
Drawn by: DS
Checked by: KA
Date: 07/13/2018
Dwg scale: 1"=20'
CIP No.: AV10000011
KIVA No.: 07-5204

STAGE 2 – B04 DESIGN SUBMISSION

CIVIL
RCC SITE
STRIPING AND SIGNING PLAN
EXISTING BUS LOOP

Package: Sheet Reference No:
B04 - RSCV0805

PLOT DATE: Jul 11, 2018 FILE PATH: C:\pwworking\gfpw01\rgrimes\d0667763\AV10000011-S-2-RSCV0805.dwg rgrimes

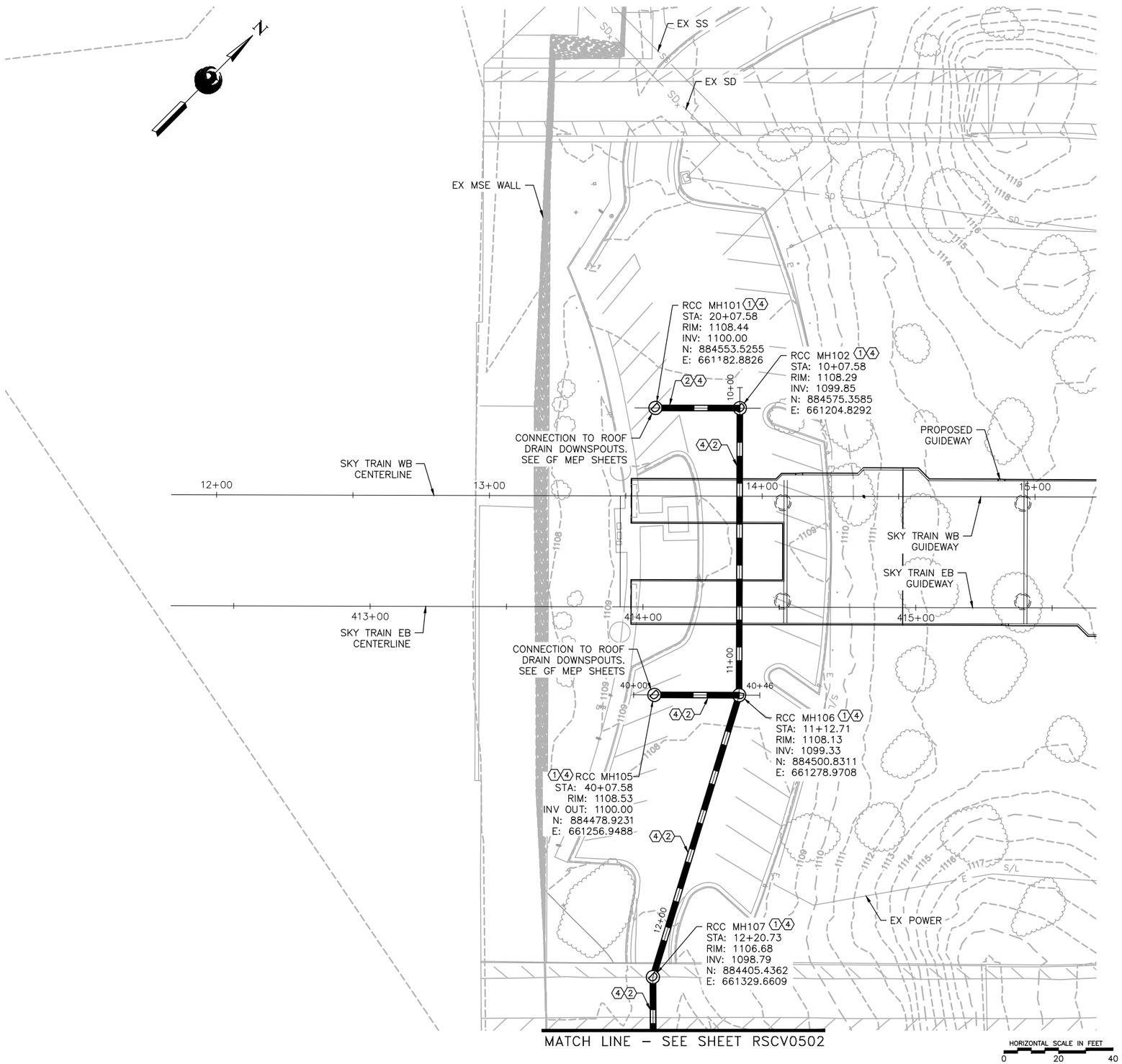

GENERAL NOTES

1. EXISTING UTILITIES AND STORM DRAINS ARE SHOWN IN APPROXIMATE LOCATIONS ONLY. CM@RISK SHALL VERIFY EXACT LOCATIONS OF ALL UNDERGROUND UTILITIES AND STORM DRAIN PRIOR TO COMMENCING WORK IN ANY AREA.

CONSTRUCTION NOTES

1. INSTALL STORM DRAIN MANHOLE PER COP STD DTL 1520 AND MAG STD DTL 522
2. INSTALL STORM DRAIN, SEE PROFILE FOR PIPE SIZE, CLASS, LENGTH AND MATERIAL
3. TIE INTO EXISTING MANHOLE
4. SAWCUT AND REMOVE PAVEMENT AND CURBING AS NECESSARY TO INSTALL STORM DRAIN, MANHOLE, OR CATCH BASIN. REPLACE PAVEMENT AND CURBING TO MATCH EXISTING TYPE AND GRADE PER MAG STD DTL 200 AND 220. ADJUST RIM TO PROPOSED SURFACE.

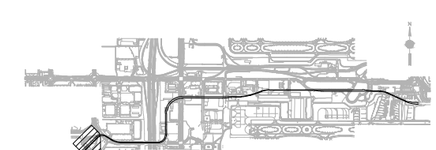

KEYMAP
N.T.S.

Call at least two full working days before you begin excavation
ARIZONA 811
Blue Stake, Inc. 1-602-263-1100
for Maricopa County (602) 263-1100

Registered Professional Engineer (Civil)
CERTIFICATE NO. 37721
NATHANIEL C. WALNUM
Date Signed 6/30/20
ARIZONA, U.S.A.
Expires 6/30/20

Design Sub-Consultant
Kimley»Horn

Design Consultant
Gannett Fleming

PER CITY OF PHOENIX ORDINANCE G-4386, THESE PLANS ARE FOR OFFICIAL USE ONLY AND WAIVE ALL RIGHTS AND CLAIMS EXCEPT AS REQUIRED TO FULFILL THE OBLIGATIONS OF YOUR CONTRACT WITH THE CITY OF PHOENIX.

NO.	REVISIONS / SUBMISSIONS	DATE
	ISSUED FOR CONSTRUCTION	07/13/18
	SUBMITTED FOR REVIEW	04/06/18

PHX DVT BYR
CITY OF PHOENIX AVIATION DEPARTMENT

PHX SKY TRAIN STAGE 2 DESIGN
500 S. 24TH STREET
PHOENIX, AZ 85034

Designed by: JRT
Drawn by: PAC
Checked by: NCW
Date: 07/13/2018
Dwg scale: 1"=20'
CIP No.: AV10000011
KIVA No.: 07-5204

STAGE 2 – B04 DESIGN SUBMISSION

CIVIL
RCC STATION - SITE
ROOF DRAINS
STORM DRAIN PLAN

Package: B04
Sheet Reference No: RSCV0501

PLOT DATE: Jul 11, 2018 FILE PATH: C:\pwworking\gfpw01\pat.crawford@kimley-horn.com\d0673371\AV10000011-S-2-RCCV05GD01.dwg Pat.Crawford

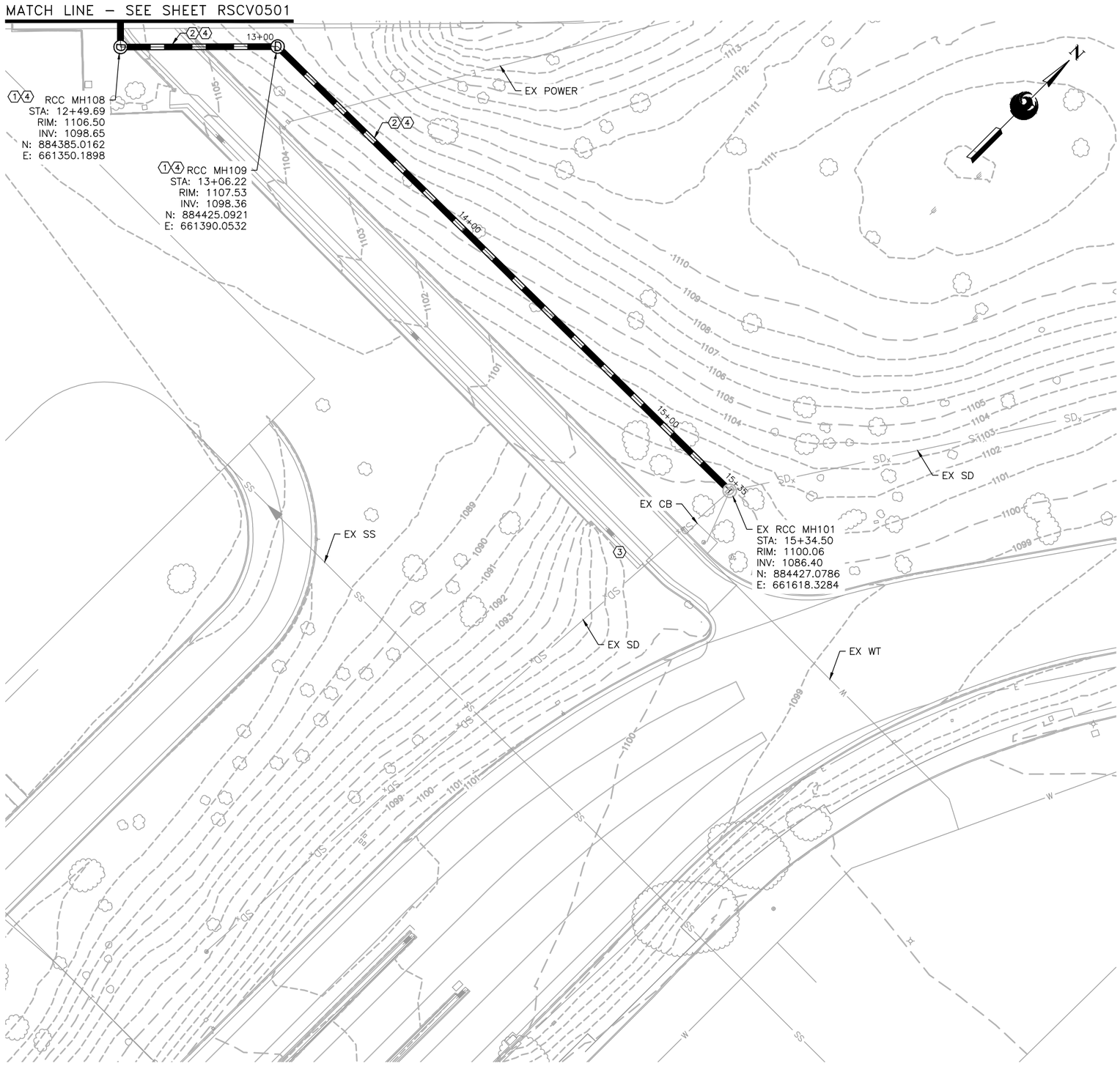

GENERAL NOTES

1. EXISTING UTILITIES AND STORM DRAINS ARE SHOWN IN APPROXIMATE LOCATIONS ONLY. CM@RISK SHALL VERIFY EXACT LOCATIONS OF ALL UNDERGROUND UTILITIES AND STORM DRAIN PRIOR TO COMMENCING WORK IN ANY AREA.

CONSTRUCTION NOTES

1. INSTALL STORM DRAIN MANHOLE PER COP STD DTL 1520 AND MAG STD DTL 522
2. INSTALL STORM DRAIN, SEE PROFILE FOR PIPE SIZE, CLASS, LENGTH AND MATERIAL
3. TIE INTO EXISTING MANHOLE
4. SAWCUT AND REMOVE PAVEMENT AND CURBING AS NECESSARY TO INSTALL STORM DRAIN, MANHOLE, OR CATCH BASIN. REPLACE PAVEMENT AND CURBING TO MATCH EXISTING TYPE AND GRADE PER MAG STD DTL 200 AND 220. ADJUST RIM TO PROPOSED SURFACE.

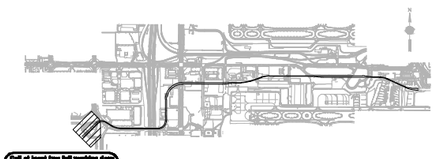

KEYMAP
N.T.S.

Call at least two full working days before you begin excavation
ARIZONA 811
Dial 8-1-1 or 1-800-STAKE-IT (782-5348)
In Maricopa County (602) 263-1100

Registered Professional Engineer (Civil)
CERTIFICATE NO. 37721
NATHAN C. WALNUM
Date Signed 6/30/20
ARIZONA U.S.A.
Expires 6/30/20

Design Sub-Consultant
Kimley»Horn

Design Consultant
Gannett Fleming

PER CITY OF PHOENIX ORDINANCE G-4396, THESE PLANS ARE FOR OFFICIAL USE ONLY AND MAY BE RELEASED TO OTHERS EXCEPT AS REQUIRED TO FULFILL THE OBLIGATIONS OF YOUR CONTRACT WITH THE CITY OF PHOENIX.

NO.	REVISIONS / SUBMISSIONS	DATE
	ISSUED FOR CONSTRUCTION	07/13/18
	SUBMITTED FOR REVIEW	04/06/18

PHX SKY TRAIN
CITY OF PHOENIX AVIATION DEPARTMENT

PHX SKY TRAIN STAGE 2 DESIGN
500 S. 24TH STREET PHOENIX, AZ 85034

Designed by: JRT
Drawn by: PAC
Checked by: NCW
Date: 07/13/2018
Dwg scale: 1"=20'
CIP No.: AV10000011
KIVA No.: 07-5204

STAGE 2 – B04 DESIGN SUBMISSION

CIVIL
RCC STATION - SITE
ROOF DRAINS
STORM DRAIN PLAN

Package: B04
Sheet Reference No: RSCV0502

PLOT DATE: Jul 11, 2018 FILE PATH: C:\pwworking\gfpw01\pat.crawford@kimley-horn.com\d0673371\AV10000011-S-2-RCCV05G001.dwg Pat.Crawford

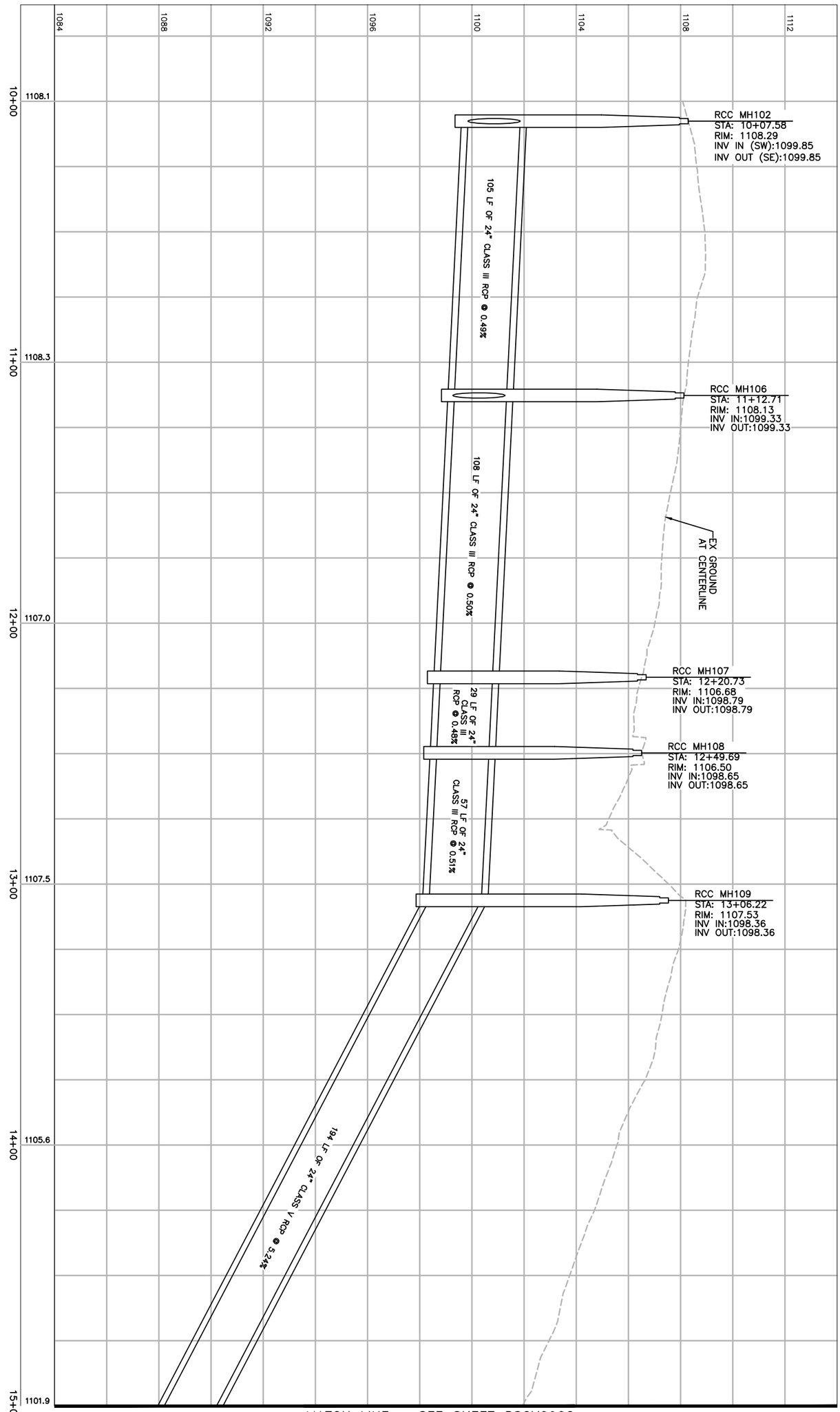

STORM DRAIN PROFILE – RCC SD 10

MATCH LINE – SEE SHEET RSCV0902

HORIZONTAL SCALE IN FEET 0 20 40

VERTICAL SCALE IN FEET 0 2 4

STAGE 2 – B04 DESIGN SUBMISSION

CIVIL
RCC STATION-SITE
ROOF DRAINS
STORM DRAIN PROFILE

Designed by: JRT
Drawn by: PAC
Checked by: NCW
Date: 07/13/2018
Dwg scale: (H) 1"=20' (V) 1"=2'
CIP No.: AV10000011
KIVA No.: 07-5204

PHX DVT GYR
CITY OF PHOENIX AVIATION DEPARTMENT

PHX SKY TRAIN
STAGE 2 DESIGN
500 S. 24TH STREET
PHOENIX, AZ 85034

PER CITY OF PHOENIX ORDINANCE G-4396, THESE PLANS ARE FOR OFFICIAL USE ONLY AND MAY NOT BE SHARED WITH OTHERS EXCEPT AS REQUIRED TO FULFILL THE OBLIGATIONS OF YOUR CONTRACT WITH THE CITY OF PHOENIX.

NO.	REVISIONS / SUBMISSIONS	DATE
	ISSUED FOR CONSTRUCTION	07/13/18
	SUBMITTED FOR REVIEW	04/06/18

Registered Professional Engineer (Civil) CERTIFICATE NO. 37721 NATHAN C. WALNUM Date Signed 07/13/18 ARIZONA, U.S.A.
Expires 6/30/20

Design Sub-Consultant
Kimley»Horn

Design Consultant
Gannett Fleming

Package: B04-RSCV0901
Sheet Reference No: V1 - 184 of 286

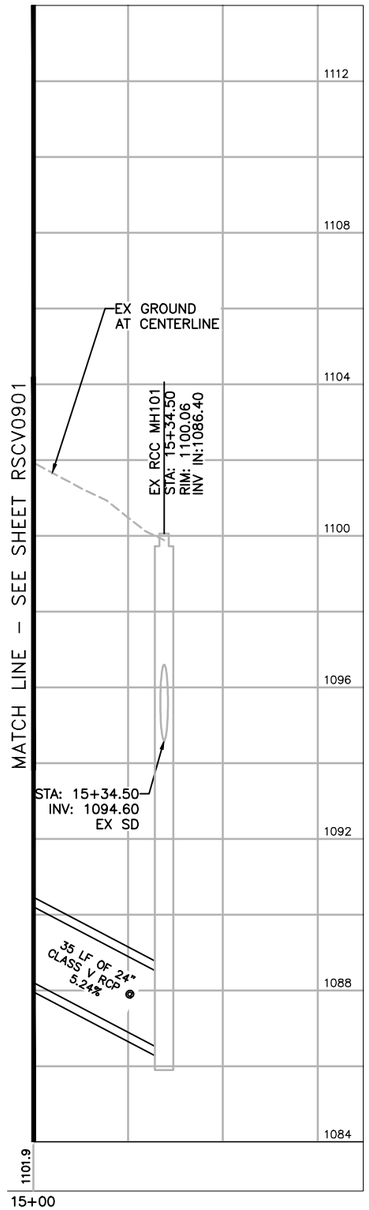

STORM DRAIN PROFILE – RCC SD 10

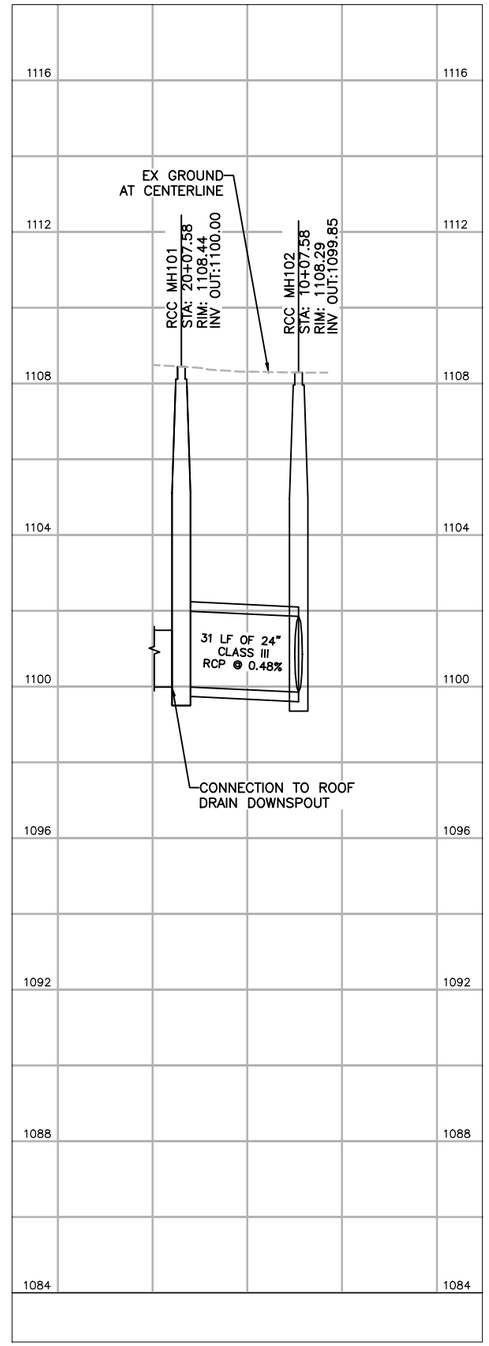

STORM DRAIN PROFILE – RCC SD 20

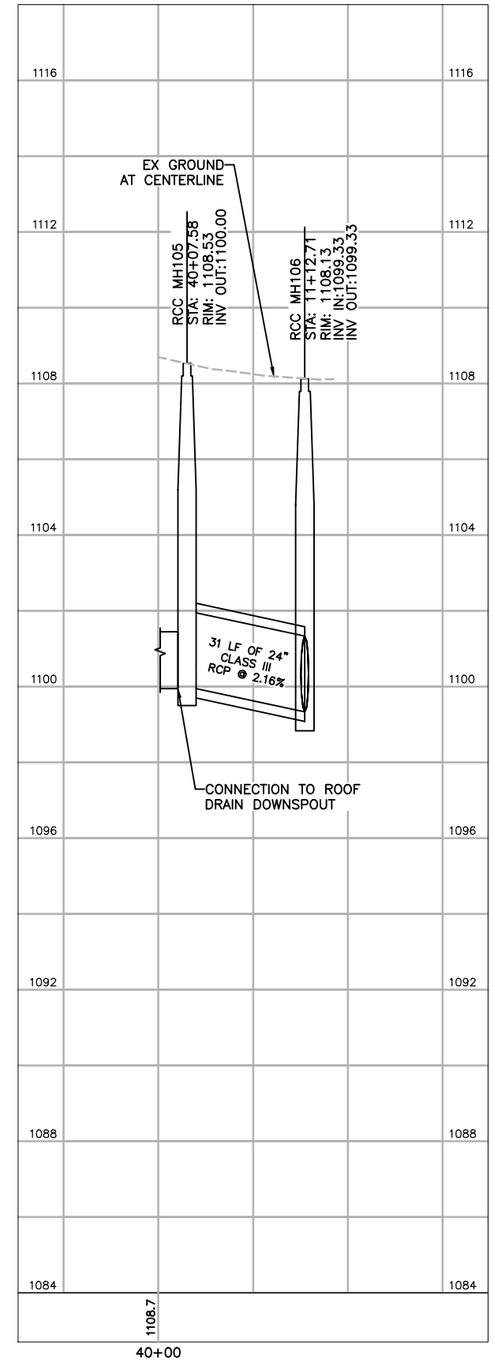

STORM DRAIN PROFILE – RCC SD 40

HORIZONTAL SCALE IN FEET
0 20 40

VERTICAL SCALE IN FEET
0 2 4

Registered Professional Engineer (Civil)
CERTIFICATE NO. 37721
NATHANIEL C. WALNUM
Date Signed 6/30/20
ARIZONA, U.S.A.
Expires 6/30/20

Design Sub-Consultant
Kimley»Horn

Design Consultant
Gannett Fleming

PER CITY OF PHOENIX ORDINANCE G-4396, THESE PLANS ARE FOR OFFICIAL USE ONLY AND MAY NOT BE SUBMITTED TO OTHERS EXCEPT AS REQUIRED TO FULFILL THE OBLIGATIONS OF YOUR CONTRACT WITH THE CITY OF PHOENIX.

NO.	REVISIONS / SUBMISSIONS	DATE
	ISSUED FOR CONSTRUCTION	07/13/18
	SUBMITTED FOR REVIEW	04/06/18

PHX DVT BYR
CITY OF PHOENIX AVIATION DEPARTMENT

PHX SKY TRAIN
STAGE 2 DESIGN
500 S. 24TH STREET
PHOENIX, AZ 85034

Designed by: JRT
Drawn by: PAC
Checked by: NCW
Date: 07/13/2018
Dwg scale(V) (H) 1"=20' 1"=2'
CIP No.: AV10000011
KIVA No.: 07-5204

STAGE 2 – B04 DESIGN SUBMISSION

CIVIL
RCC STATION - SITE
ROOF DRAINS
STORM DRAIN PROFILE

Package: Sheet Reference No:
B04 - RSCV0902
V1 - 185 of 286

PLOT DATE: Jul 11, 2018 FILE PATH: C:\pwworking\gfpw01\pat.crawford@kimley-horn.com\d0673371\AV10000011-S-2-RCCV09DR01.dwg Pat.Crawford

CURVE TABLE						
CURVE	RADIUS	LENGTH	CHORD BEARING	CHORD	DELTA	TANGENT
C2	671.00'	107.86'	S66°13'09"E	107.74'	9°12'36"	54.05'
C3	665.05'	220.23'	S82°58'38"E	219.23'	18°58'25"	111.13'
C4	30.58'	45.04'	N47°34'13"W	41.08'	84°22'14"	27.72'
C5	30.58'	45.04'	S48°03'33"W	41.08'	84°22'14"	27.72'
C6	3750.00'	311.11'	N87°52'04"E	311.02'	4°45'12"	155.64'
C8	20.00'	30.21'	N51°14'13"W	27.42'	86°32'40"	18.83'
C9	25.00'	39.88'	S44°18'20"W	35.79'	91°24'19"	25.62'
C10	4199.55'	238.96'	N85°53'24"E	238.92'	3°15'37"	119.51'
C11	25.58'	39.98'	S50°57'55"E	36.04'	89°32'58"	25.38'
C12	25.58'	39.93'	N38°31'31"E	36.00'	89°25'50"	25.33'
C13	4199.55'	5.40'	N83°12'14"E	5.40'	0°04'25"	2.70'
C14	3710.00'	315.30'	N87°48'35"E	315.21'	4°52'10"	157.75'
C15	20.58'	32.33'	N44°45'20"W	29.11'	90°00'00"	20.58'
C16	20.58'	32.33'	N45°14'40"E	29.11'	90°00'00"	20.58'
C17	696.84'	241.10'	S76°31'33"E	239.90'	19°49'25"	121.77'
C18	691.12'	90.43'	S66°11'38"E	90.37'	7°29'50"	45.28'

LINE TABLE		
LINE	LENGTH	BEARING
L2	512.53	S89°45'20.13"E
L3	5.00	S1°05'03.27"E
L4	5.01	S3°45'49.31"W
L5	411.60	S89°45'20.12"E
L6	12.87	S7°57'52.82"E
L7	14.57	N0°35'37.17"W
L8	17.25	N0°35'37.17"W
L9	623.28	S89°45'20.13"E
L10	32.47	N0°14'40.19"E
L12	233.20	S89°45'20.13"E

LEGEND CONTINUED

STAMPED CONCRETE MEDIAN CAP TO MATCH EXISTING BRICK PAVERS

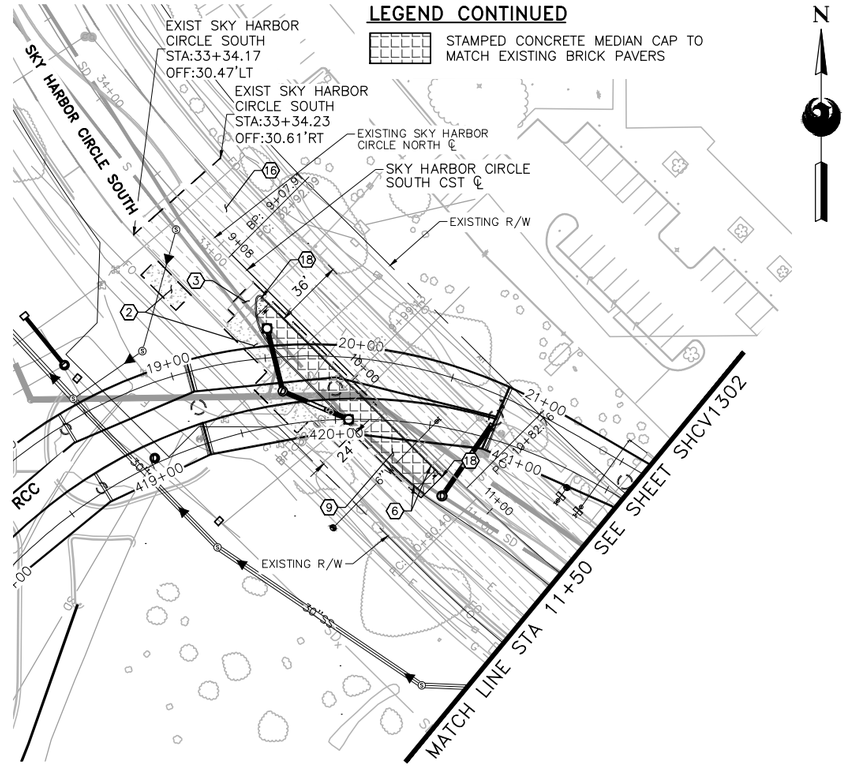

LEGEND

- CONSTRUCT NEW CONCRETE PAVEMENT PER TYPICAL SECTIONS
- CONSTRUCT NEW CONCRETE SIDEWALK PER TYPICAL SECTIONS
- MICROSEAL EXISTING ASPHALT PAVEMENT
- CONSTRUCT NEW ASPHALT PAVEMENT PER TYPICAL SECTIONS
- PLACE DECOMPOSED GRANITE GRAVEL AND LANDSCAPE

GENERAL NOTES

1. EXISTING UTILITIES ARE SHOWN IN APPROXIMATE LOCATIONS ONLY. CM@RISK SHALL VERIFY EXACT LOCATIONS OF ALL UNDERGROUND UTILITIES PRIOR TO COMMENCING ANY WORK IN ANY AREA. ALL EXISTING UTILITIES NOT SHOWN TO BE REMOVED OR RELOCATED SHALL BE PROTECTED IN PLACE.
2. REFER TO SHEETS SHCV0101 – SHCV0104 FOR DEMOLITION PLAN.
3. REFER TO SHEETS SHCV0501 – SHCV0503 FOR GRADING & DRAINAGE PLAN.
4. STATIONS AND OFFSETS REFER TO SKY HARBOR CIRCLE SOUTH CST CENTERLINE AND ARE TO THE FACE OF CURB UNLESS NOTED OTHERWISE

CONSTRUCTION NOTES

1. SAWCUT, MATCH EXISTING
2. CONSTRUCT PCC PAVEMENT SECTION PER TYPICAL SECTIONS
3. CONSTRUCT AC PAVEMENT SECTION PER TYPICAL SECTIONS
4. CONSTRUCT PCC SIDEWALK PER TYPICAL SECTIONS CITY OF PHOENIX STANDARD DETAIL P1230
5. CONSTRUCT BUS SHELTER PAD PER CITY OF PHOENIX STANDARD DETAIL P1262
6. CONSTRUCT 6" SINGLE CURB PER MAG STANDARD DETAIL 222, TYPE 'A'
7. CONSTRUCT 6" VERTICAL CURB AND GUTTER PER MAG STANDARD DETAIL 220, TYPE 'A'
8. RESTORE LANDSCAPING, SEE LANDSCAPE PLANS
9. CONSTRUCT STAMPED CONCRETE MEDIAN CAP TO MATCH EXISTING BRICK PAVERS, SPECIAL DETAIL
10. CONSTRUCT RETURN TYPE CONCRETE DRIVEWAY CITY OF PHOENIX STANDARD DETAIL P1243, MODIFIED
11. CONSTRUCT CONCRETE DRIVEWAY ENTRANCE, CITY OF PHOENIX STANDARD DETAIL P1255, TYPE 1 MODIFIED
12. INSTALL CONCRETE SCUPPER WITH 4' SPILLWAY PER MAG STANDARD DETAIL 206–1 AND 206–2
13. INSTALL TRUNCATED DOMES PER CITY OF PHOENIX STANDARD DETAIL P1232, CONTRACTOR TO FIELD VERIFY EXISTING RAMP SLOPES MEET ADA REQUIREMENTS PRIOR TO INSTALLATION
14. CONSTRUCT CONCRETE CURB RAMP PER CITY OF PHOENIX STANDARD DETAIL P1240, MODIFIED
15. CONSTRUCT DIRECTIONAL CONCRETE CURB RAMP (DETAIL TO BE PROVIDED AT NEXT SUBMITTAL)
16. MICROSEAL EXISTING ASPHALT PAVEMENT
17. CONSTRUCT CONCRETE VALLEY GUTTER PER MAG STANDARD DETAIL 240
18. MEDIAN NOSE TRANSITION PER MAG DETAIL 223

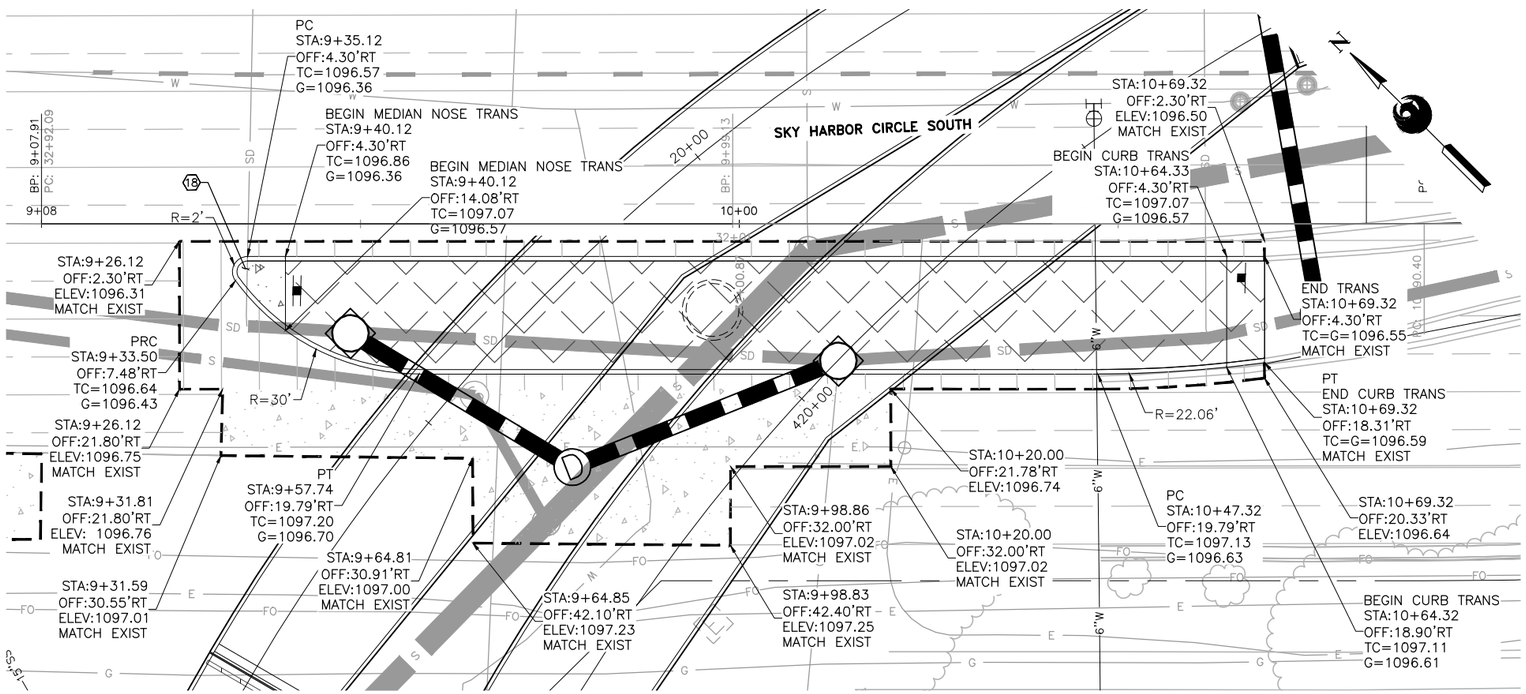

HORIZONTAL SCALE IN FEET 0 40 80

VERTICAL SCALE IN FEET 0 4 8

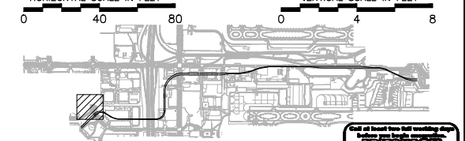

KEYMAP
N.T.S.

Call at least two full working days before you begin excavation
ARIZONA 811
Blue Stake, Inc. (602) 263-1100
Az Underground Exchange (602) 263-9100

Registered Professional Engineer (Civil) CERTIFICATE NO. 36 24 18 84 DAVID RUTKOWSKI Date Signed 9/30/2020 Arizona U.S.A.
EXPIRES 9/30/2020

Design Sub-Consultant
Kimley»Horn

Design Consultant
Gannett Fleming

PER CITY OF PHOENIX ORDINANCE G-4398, THESE PLANS ARE FOR OFFICIAL USE ONLY AND MAY NOT BE SHARED WITH OTHERS EXCEPT AS REQUIRED TO FULFILL THE OBLIGATIONS OF YOUR CONTRACT WITH THE CITY OF PHOENIX.

NO.	REVISIONS / SUBMISSIONS	DATE
	ISSUED FOR CONSTRUCTION	04/13/18
	SUBMITTED FOR REVIEW	02/02/18

PHX DVT BYR
CITY OF PHOENIX AVIATION DEPARTMENT

PHX SKY TRAIN STAGE 2 DESIGN
500 S. 24TH STREET PHOENIX, AZ 85034

Designed by: SMK
Drawn by: SMK
Checked by: DRR
Date: 04/13/2018
Dwg scale: 1"=40'
CIP No.: AV10000011
KIVA No.: 07–5204

STAGE 2 – B03 DESIGN SUBMISSION

CIVIL
SKY HARBOR CIRCLE PAVING PLAN AND PROFILE

Package: B03 - SHCV1301
Sheet Reference No:
V1 - 237 of 339

PLOT DATE: Apr 04, 2018 FILE PATH: C:\pwworking\gfpv01\david.rutkowski@kimley-horn.com\d0673384\AV10000011-S-2-SHCV06PV02.dwg mark.flood

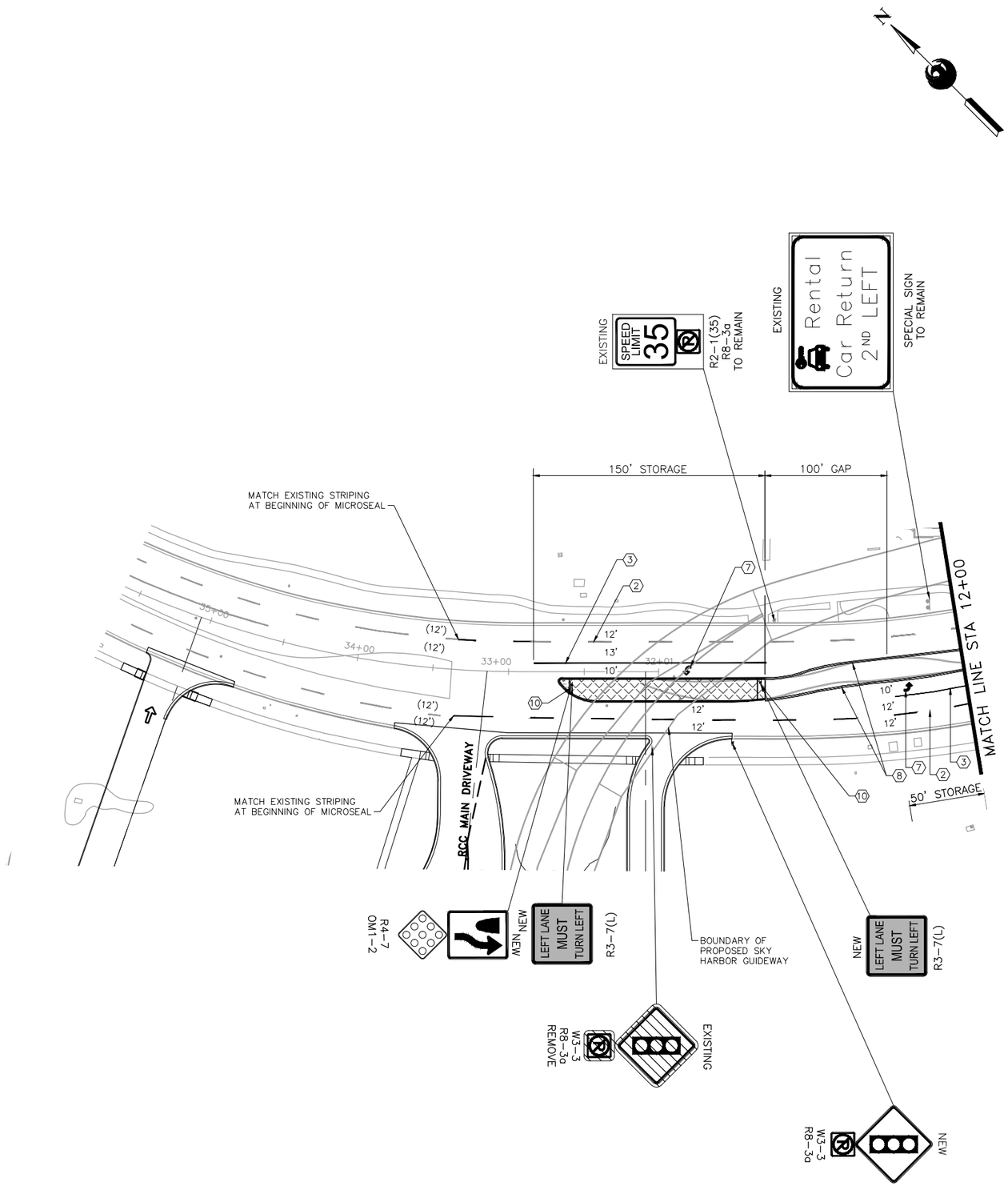

GENERAL NOTES

1. REFER TO SHEETS SHCV0101 – SHCV0104 FOR DEMOLITION PLANS.
2. REFER TO SHEETS SHCV0201 – SHCV0204 FOR GEOMETRIC PLANS.
3. ALL NEW PAINTED MARKINGS SHALL RECEIVE A DOUBLE APPLICATION OF TRAFFIC PAINT.
4. ALL STATIONING AND OFFSETS REFER TO THE SKY HARBOR CIRCLE SOUTH CENTERLINE UNLESS OTHERWISE NOTED.

CONSTRUCTION NOTES

1. APPLY FOUR–INCH (4") SOLID WHITE PAVEMENT MARKING
2. APPLY FOUR–INCH (4") BROKEN WHITE PAVEMENT MARKING (10' LINE, 30' GAP)
3. APPLY EIGHT INCH (8") SOLID WHITE PAVEMENT MARKING
4. APPLY EIGHT INCH (8") BROKEN WHITE PAVEMENT MARKING (3' LINE, 9' GAP)
5. PROVIDE AND INSTALL PREFORMED TWELVE–INCH (12") SOLID WHITE CROSS WALK PAVEMENT MARKING, CROSS WALKS CENTERED ON SIDEWALK RAMPS
6. PROVIDE AND INSTALL PREFORMED TWENTY–INCH (20") SOLID WHITE STOP BAR PAVEMENT MARKING
7. PROVIDE AND INSTALL PREFORMED SOLID WHITE ARROW PAVEMENT MARKING
8. APPLY FOUR–INCH (4") DOUBLE YELLOW PAVEMENT MARKING
9. APPLY FOUR–INCH (4") DOUBLE YELLOW PAVEMENT MARKING, ONE SOLID, ONE BROKEN (10'LINE, 30' GAP)
10. PROVIDE AND INSTALL SINGLE 2–7/8" SIGN POST PER CITY OF PHOENIX STANDARD DETAIL P1023
11. PROVIDE AND INSTALL NEW FLAT SHEET SIGN PANEL ON LUMINAIRE POLE

HORIZONTAL SCALE IN FEET
0 40 80

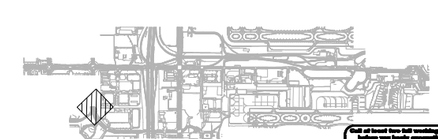

KEYMAP
N.T.S.

Call at least two full working days before you begin excavation
ARIZONA 811
Blue Stake, Inc. 1-800-782-5348
Arizona Botanical Gardens (602) 263-7600

Registered Professional Engineer (Civil)
CERTIFICATE NO. 22416
MICHAEL S. WASHKOWIAK
Date Signed 04/13/18
ARIZONA, U.S.A.
EXPIRES 3/31/2020

Design Sub–Consultant
Kimley»Horn

Design Consultant
Gannett Fleming

PER CITY OF PHOENIX ORDINANCE G-4398, THESE PLANS ARE FOR OFFICIAL USE ONLY AND MAY NOT BE SHARED WITH OTHERS EXCEPT AS REQUIRED TO FULFILL THE OBLIGATIONS OF YOUR CONTRACT WITH THE CITY OF PHOENIX.

NO.	REVISIONS / SUBMISSIONS	DATE
	ISSUED FOR CONSTRUCTION	04/13/18
	SUBMITTED FOR REVIEW	02/02/18

PHX SKY HARBOR
CITY OF PHOENIX AVIATION DEPARTMENT

PHX SKY TRAIN STAGE 2 DESIGN
500 S. 24TH STREET PHOENIX, AZ 85034

Designed by: SK
Drawn by: JAB
Checked by: MSW
Date: 04/13/2018
Dwg scale: 1"=40'
CIP No.: AV10000011
KIVA No.: 07–5204

STAGE 2 – B03 DESIGN SUBMISSION

CIVIL
SKY HARBOR CIRCLE MARKING AND SIGNAGE PLAN

Package: B03
Sheet Reference No: SHCV0801
V1 - 244 of 339

PLOT DATE: Apr 04, 2018 FILE PATH: C:\pwworking\gfpw01\david.rutkowski@kimley-horn.com\d0673384\AV10000011-S-2-SHCV08PM02.dwg mark.flood

LIGHT FIXTURE SCHEDULE								
SYMBOL	LABEL	CATALOG NUMBER	DESCRIPTION	LAMP	NUMBER LAMPS	LUMENS PER LAMP	LLF	WATTAGE
	R1	DSX1 LED 40C 700 27K T2M MVOLT HS	DSX1 LED WITH 40 LEDs @700mA, 2700K, TYPE 2 MEDIUM OPTICS, WITH HOUSE SIDE SHIELD	LED	1	8283	0.91	70

1 ROADWAY LIGHT FIXTURE SCHEDULE

SCALE: NTS

GENERAL NOTES:

ALL SPLICES SHALL BE DONE USING A BLACKBURN WR–7, WR–9, WR–189, OR WR–279 H TYPE CRIMP CONNECTOR. CRIMPING SHALL BE DONE USING A BURNDY TOO No. OS–50 WITH 5/8" No. OS–50 WITH 5/8" DIE SHALL BE USED TO CRIMP THE WR–7, WR–9. A BURNDY TOOL No. MD6–8 WITH O3 DIE SHALL BE USED TO CRIMP THE WR–189. A BURNDY TOOL MD6–8 WITH D3 DIE SHALL BE USED TO CRIMP THE WR–279.

ALL POLES SHALL BE WIRED USING TWO (2) #12 AWG TYP THNN/THWN STRANDED COPPER CONDUCTORS, 600V, NEC APPROVED AND ONE (1) #12 SOLID BARE OR GREEN COPPER BOND WIRE. BOND WIRE SHALL RUN FROM THE LUMINAIRE TO A MINIMUM OF TWELVE (12) INCES BELOW POLE HAND HOLE, FR TERMINATION. CONDUCTORS SHALL RUN FROM LUMINAIRE TO PULL BOX.

ALL STREET LIGHT CONDUCTORS AND BOND WIRES SHALL BE COPPER. CONDUCTORS FROM HAND HOLE TO LUMINAIRE SHALL BE AWG TYPE THHN/THWN. ALL CONDUCTORS SHALL BE STRANDED AND ALL BOND WIRES SHALL BE SOLID.

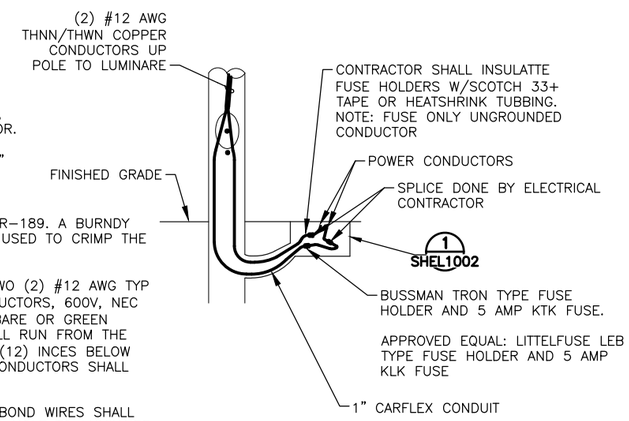

3 FUSING DETAIL

SCALE: NTS

NOTE:
A SINGLE CONDUIT SHALL BE INSTALLED FROM STREET LIGHT POLE TO PULL BOX CONTAINING BOTH POWER AND GROUNDING CONDUCTORS IN ONE CONDUIT.

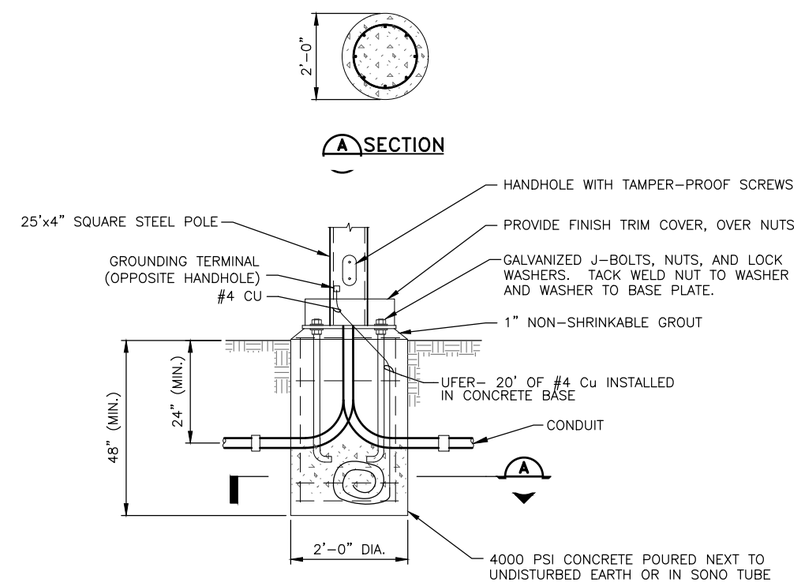

2 ROADWAY LIGHTING POLE MOUNTING – TALL BASE

SCALE: NTS

NOTE:

1. REFER TO STRUCTURAL DRAWINGS FOR POLE BASE DETAILS.

Design Sub–Consultant
CR engineers
Phone: (480) 816-5541
www.crengr.com
Expires 9/30/2019
Design Consultant
Gannett Fleming

PER CITY OF PHOENIX ORDINANCE G-4398, THESE PLANS ARE FOR OFFICIAL USE ONLY AND MAY NOT BE SHARED WITH OTHERS EXCEPT AS REQUIRED TO FULFILL THE OBLIGATIONS OF YOUR CONTRACT WITH THE CITY OF PHOENIX.

NO.	REVISIONS / SUBMISSIONS	DATE
	ISSUED FOR CONSTRUCTION	04/13/18
	SUBMITTED FOR REVIEW	02/02/18

PHX SKY TRAIN
CITY OF PHOENIX AVIATION DEPARTMENT

PHX SKY TRAIN STAGE 2 DESIGN
500 S. 24TH STREET PHOENIX, AZ 85034

Designed by: KEL
Drawn by: JBW
Checked by: CA
Date: 04/13/2018
Dwg scale:AS NOTED
CIP No.:AV10000011
KIVA No.: 07–5204

STAGE 2 – B03 DESIGN SUBMISSION

CIVIL
SKY HARBOR CIRCLE
ROADWAY LIGHTING DETAILS

Package: B03
Sheet Reference No: SHEL1001