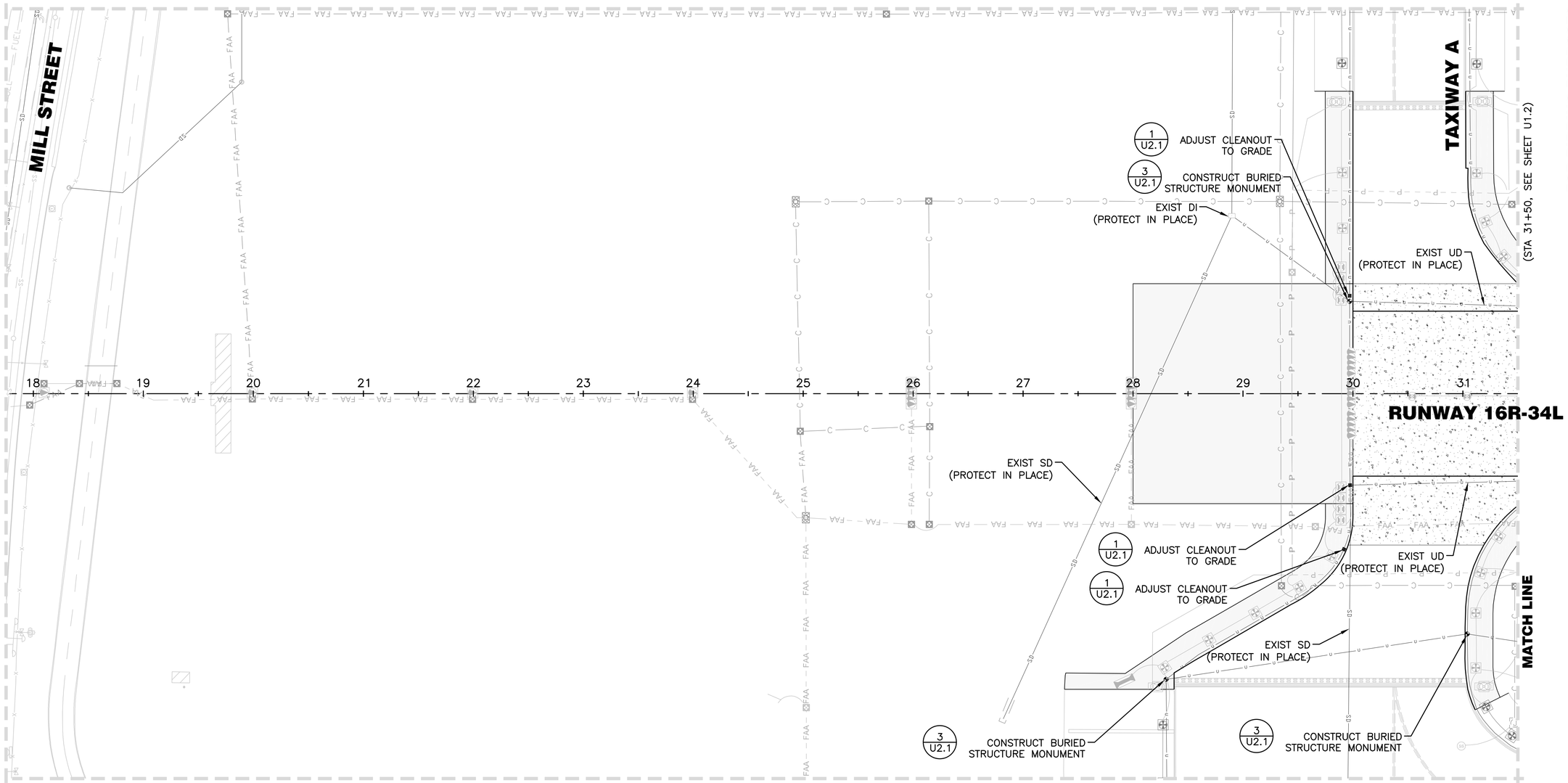

LEGEND

- AC PAVEMENT
- CONCRETE PCC PAVEMENT
- 55 — PROJECT CONTROL STATION

NOTES

1. REFERENCE DRAWING G4.1 FOR ALIGNMENT INFORMATION.
2. REFERENCE DRAWINGS PH0.1–PH4.5 FOR PHASING LIMITATIONS.
3. CONTRACTOR TO VERIFY EXISTING DEPTHS AND LOCATIONS PRIOR TO CONSTRUCTING STORM DRAIN AND UNDERDRAIN PIPING.
4. CONTRACTOR TO PROVIDE TEMPORARY STORM WATER BYPASS AND EROSION PROTECTIONS PER SPECIFICATION P–156. THERE SHALL BE NO DIRECT PAYMENT FOR THIS WORK.
5. REFER TO ELECTRICAL SHEETS FOR ELECTRICAL UTILITY INFORMATION.
6. CONTRACTOR TO PROTECT EXISTING UNDERDRAIN IN PLACE AND RESTORE UNDERDRAIN TRENCH AS SHOWN ON SHEET P1.1 AND U2.4.
7. REFER TO SHEETS P2.1–P2.26 FOR BID LAYOUT INFORMATION.

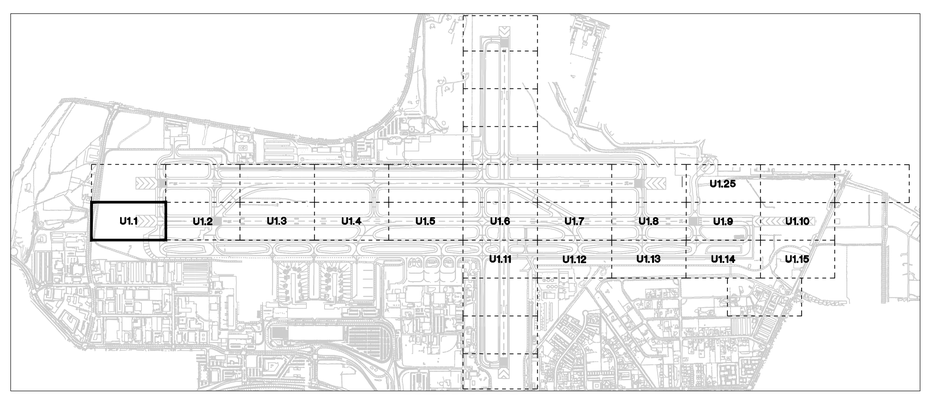

KEY MAP

50' 25' 0 50' 100'

SCALE: 1" = 50'

FOR BIDDING PURPOSES ONLY

NO.	DESCRIPTION	DATE

DATE: DECEMBER 11, 2019
SCALE: N/A
DRAWN BY: DAB
DESIGNED BY: MAK, BAM
CHECKED BY: MAC

BRIAN A. MARTINEZMOLESS
Exp. 12-31-21
CIVIL
No. 21202
PROFESSIONAL ENGINEER - STATE OF NEVADA

WOOD RODGERS
BUILDING RELATIONSHIPS ONE PROJECT AT A TIME
1361 Corporate Blvd
Reno, NV 89502
Tel 775.823.4068
Fax 775.823.4066

Reno–Tahoe International Airport

RUNWAY 16R-34L RECONSTRUCTION

UTILITY LAYOUT PLAN

PROJECT NO. 8494.002

DRAWING U1.1

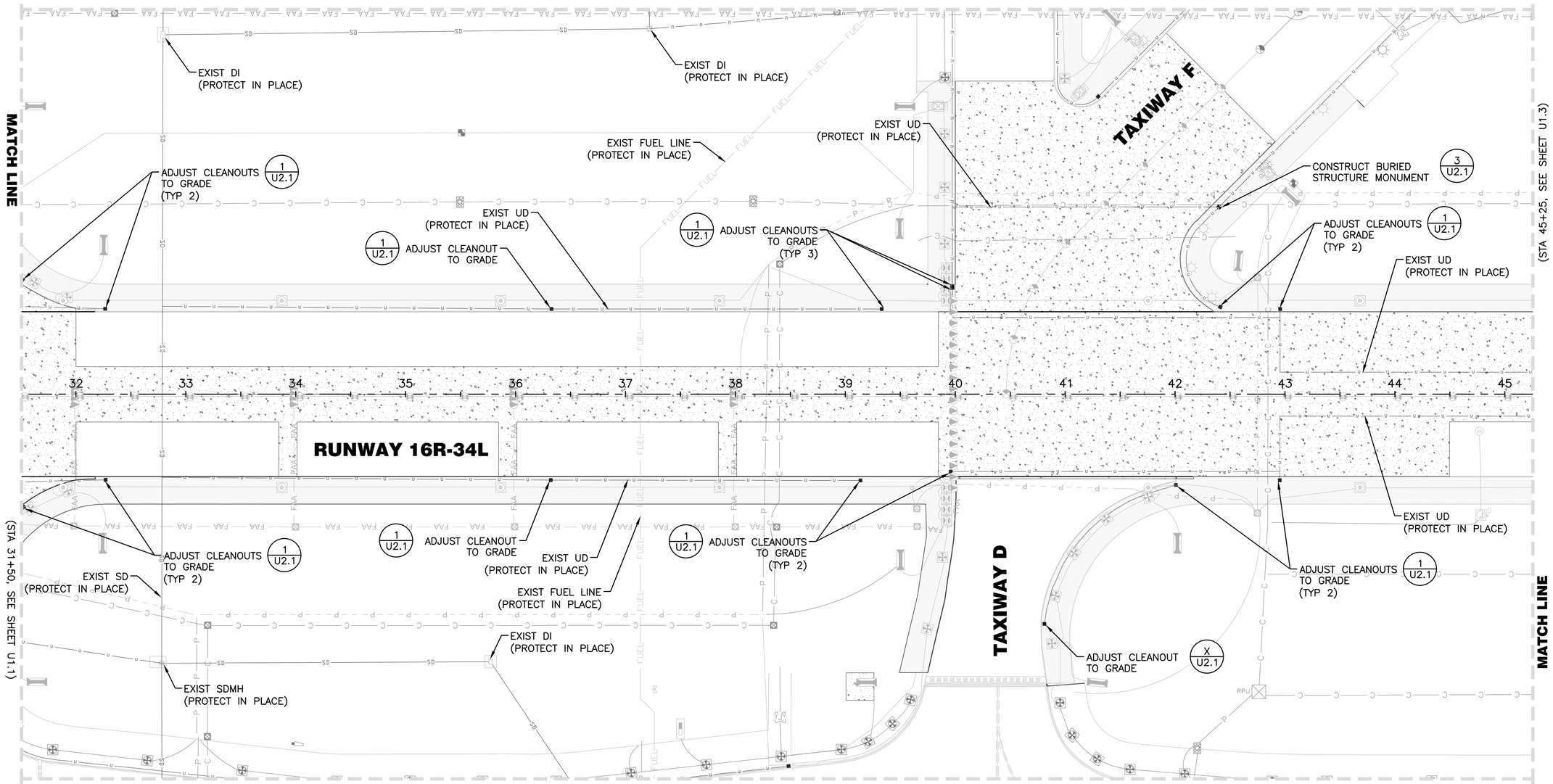

LEGEND

- AC PAVEMENT
- CONCRETE PCC PAVEMENT
- 55 — PROJECT CONTROL STATION

NOTES

1. REFERENCE DRAWING G4.1 FOR ALIGNMENT INFORMATION.
2. REFERENCE DRAWINGS PH0.1–PH4.5 FOR PHASING LIMITATIONS.
3. CONTRACTOR TO VERIFY EXISTING DEPTHS AND LOCATIONS PRIOR TO CONSTRUCTING STORM DRAIN AND UNDERDRAIN PIPING.
4. CONTRACTOR TO PROVIDE TEMPORARY STORM WATER BYPASS AND EROSION PROTECTIONS PER SPECIFICATION P–156. THERE SHALL BE NO DIRECT PAYMENT FOR THIS WORK.
5. REFER TO ELECTRICAL SHEETS FOR ELECTRICAL UTILITY INFORMATION.
6. CONTRACTOR TO PROTECT EXISTING UNDERDRAIN IN PLACE AND RESTORE UNDERDRAIN TRENCH AS SHOWN ON SHEET P1.1 AND U2.4.
7. REFER TO SHEETS P2.1–P2.26 FOR BID LAYOUT INFORMATION.

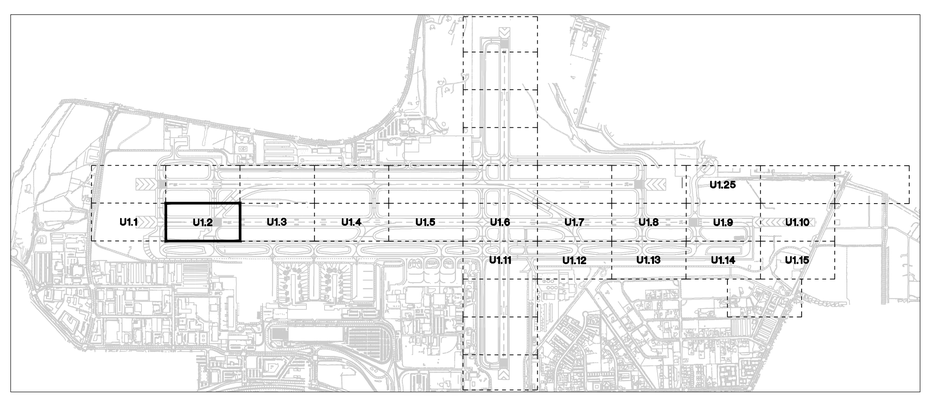

KEY MAP

50' 25' 0 50' 100'

SCALE: 1" = 50'

FOR BIDDING PURPOSES ONLY

NO.	DESCRIPTION	DATE

DATE: DECEMBER 11, 2019
SCALE: N/A
DRAWN BY: DAB
DESIGNED BY: MAK, BAM
CHECKED BY: MAC

BRIAN A. MARTINEZMOLES
Exp. 12-31-21
CIVIL
No. 21202
PROFESSIONAL ENGINEER - STATE OF NEVADA

WOOD RODGERS
BUILDING RELATIONSHIPS ONE PROJECT AT A TIME
1361 Corporate Blvd
Reno, NV 89502
Tel 775.823.4068
Fax 775.823.4066

Reno–Tahoe International Airport

RUNWAY 16R-34L RECONSTRUCTION

UTILITY LAYOUT PLAN

PROJECT NO. 8494.002

DRAWING U1.2

Z:\Jobs\8494_RTIA Runway\RTIA Runway 16R_04\Civil\Dwg\2-16R-34L_BidPlng2\U0102_16R.dwg 12/9/2019 5:06 PM Trevor Shomblin

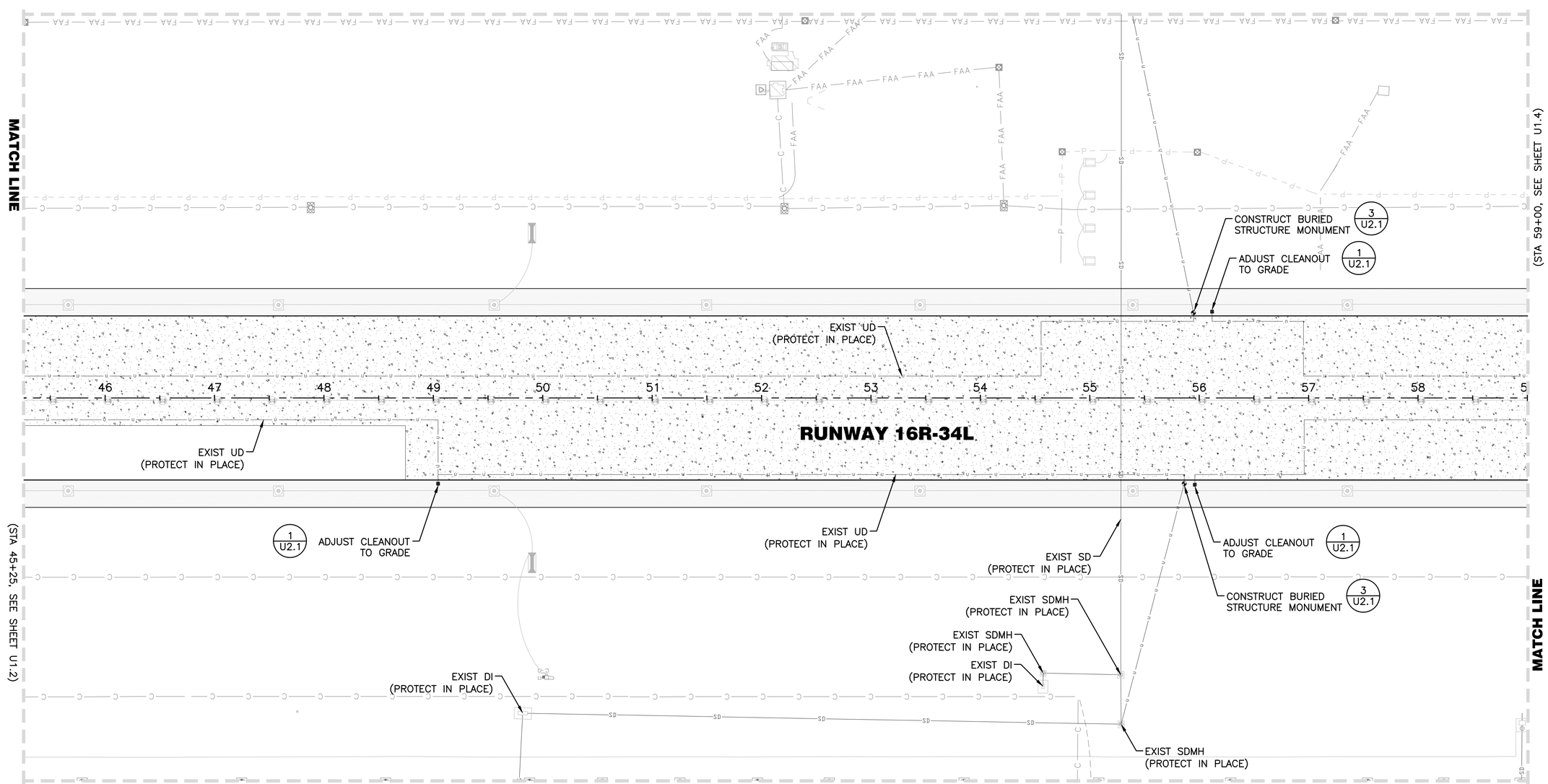

LEGEND

- AC PAVEMENT
- CONCRETE PCC PAVEMENT
- 55 — PROJECT CONTROL STATION

NOTES

1. REFERENCE DRAWING G4.1 FOR ALIGNMENT INFORMATION.
2. REFERENCE DRAWINGS PH0.1–PH4.5 FOR PHASING LIMITATIONS.
3. CONTRACTOR TO VERIFY EXISTING DEPTHS AND LOCATIONS PRIOR TO CONSTRUCTING STORM DRAIN AND UNDERDRAIN PIPING.
4. CONTRACTOR TO PROVIDE TEMPORARY STORM WATER BYPASS AND EROSION PROTECTIONS PER SPECIFICATION P–156. THERE SHALL BE NO DIRECT PAYMENT FOR THIS WORK.
5. REFER TO ELECTRICAL SHEETS FOR ELECTRICAL UTILITY INFORMATION.
6. CONTRACTOR TO PROTECT EXISTING UNDERDRAIN IN PLACE AND RESTORE UNDERDRAIN TRENCH AS SHOWN ON SHEET P1.1 AND U2.4.
7. REFER TO SHEETS P2.1–P2.26 FOR BID LAYOUT INFORMATION.

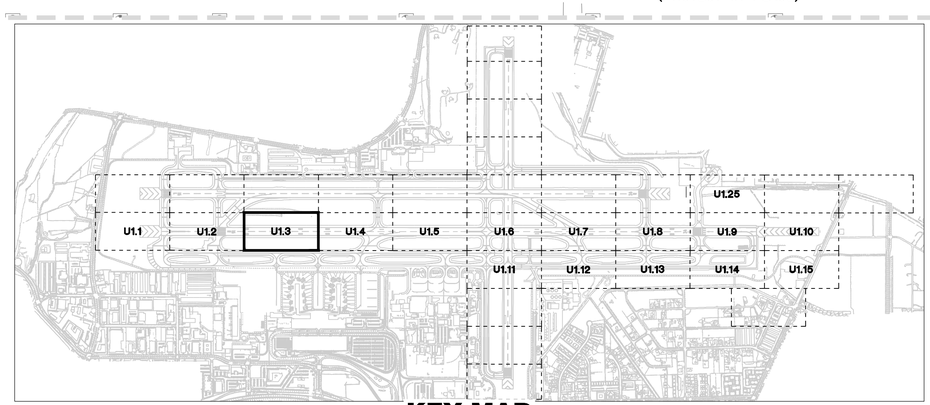

KEY MAP

50' 25' 0 50' 100'

SCALE: 1" = 50'

FOR BIDDING PURPOSES ONLY

NO.	DESCRIPTION	DATE

DATE: DECEMBER 11, 2019
SCALE: N/A
DRAWN BY: DAB
DESIGNED BY: MAK, BAM
CHECKED BY: MAC

PROFESSIONAL ENGINEER - STATE OF NEVADA
BRIAN A. MARTINEZMOLES
Exp. 12-31-21
CIVIL
No. 21202

WOOD RODGERS
BUILDING RELATIONSHIPS ONE PROJECT AT A TIME
1361 Corporate Blvd
Reno, NV 89502
Tel 775.823.4068
Fax 775.823.4066

Reno–Tahoe International Airport

RUNWAY 16R-34L RECONSTRUCTION

UTILITY LAYOUT PLAN

PROJECT NO. 8494.002

DRAWING U1.3

J:\Jobs\8494_RTIA Runway\RTIA Runway 16R_DA\Civil\Dwg\2-16R-34L_BidFlig2\U0103_16R.dwg 12/9/2019 5:07 PM Trevor Shomblin

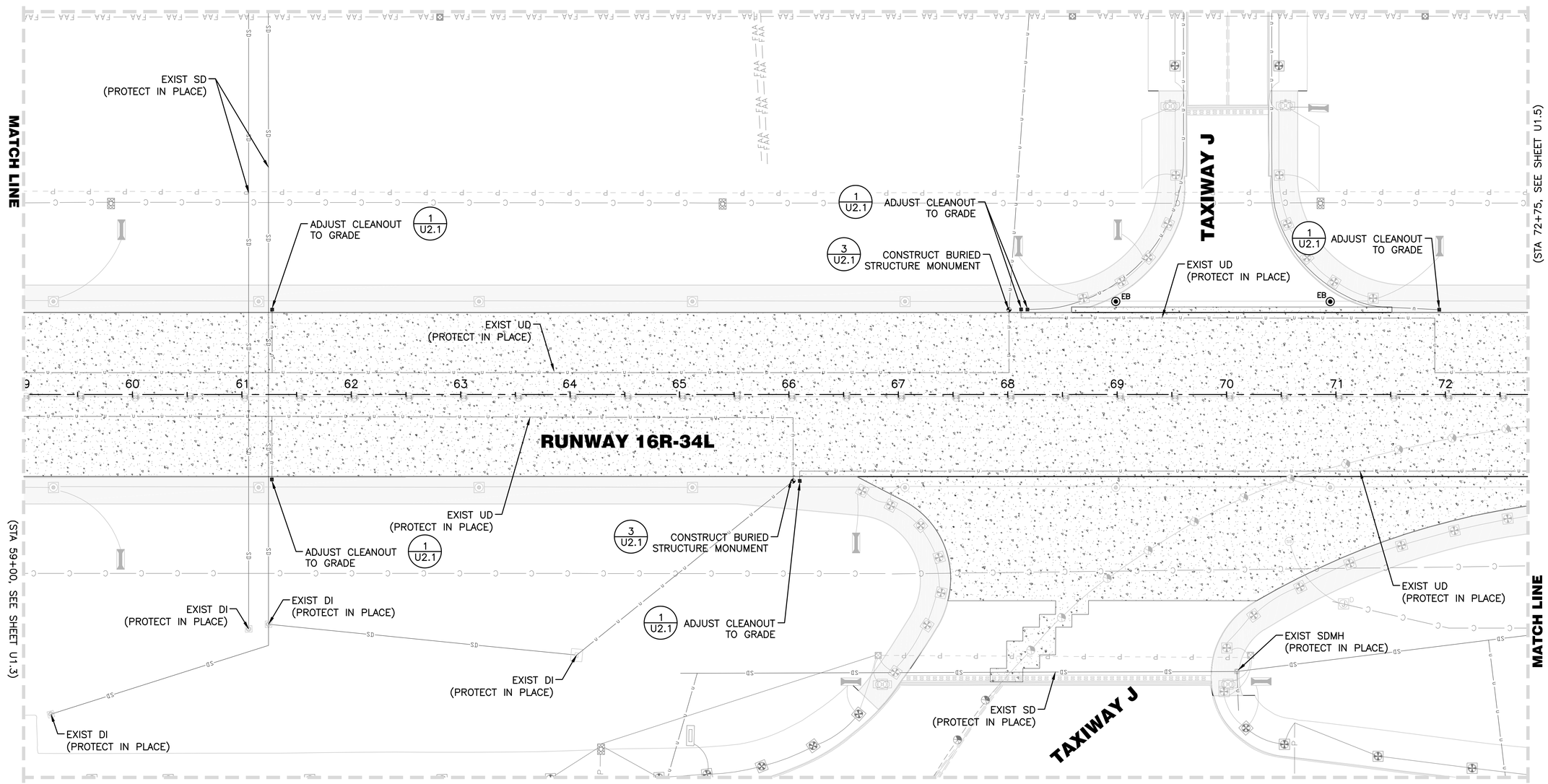

LEGEND

- AC PAVEMENT
- CONCRETE PCC PAVEMENT
- 55 — PROJECT CONTROL STATION

NOTES

1. REFERENCE DRAWING G4.1 FOR ALIGNMENT INFORMATION.
2. REFERENCE DRAWINGS PH0.1–PH4.5 FOR PHASING LIMITATIONS.
3. CONTRACTOR TO VERIFY EXISTING DEPTHS AND LOCATIONS PRIOR TO CONSTRUCTING STORM DRAIN AND UNDERDRAIN PIPING.
4. CONTRACTOR TO PROVIDE TEMPORARY STORM WATER BYPASS AND EROSION PROTECTIONS PER SPECIFICATION P–156. THERE SHALL BE NO DIRECT PAYMENT FOR THIS WORK.
5. REFER TO ELECTRICAL SHEETS FOR ELECTRICAL UTILITY INFORMATION.
6. CONTRACTOR TO PROTECT EXISTING UNDERDRAIN IN PLACE AND RESTORE UNDERDRAIN TRENCH AS SHOWN ON SHEET P1.1 AND U2.4.
7. REFER TO SHEETS P2.1–P2.26 FOR BID LAYOUT INFORMATION.

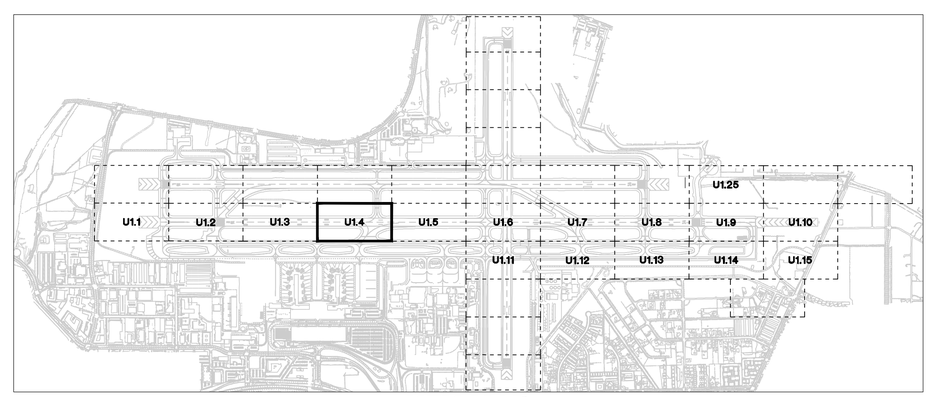

KEY MAP

50' 25' 0 50' 100'

SCALE: 1" = 50'

FOR BIDDING PURPOSES ONLY

NO.	DESCRIPTION	DATE

DATE: DECEMBER 11, 2019
SCALE: N/A
DRAWN BY: DAB
DESIGNED BY: MAK, BAM
CHECKED BY: MAC

BRIAN A. MARTINEZMOLESS
Exp. 12-31-21
CIVIL
No. 21202
PROFESSIONAL ENGINEER - STATE OF NEVADA

WOOD RODGERS
BUILDING RELATIONSHIPS ONE PROJECT AT A TIME
1361 Corporate Blvd
Reno, NV 89502
Tel 775.823.4068
Fax 775.823.4066

Reno–Tahoe International Airport

RUNWAY 16R-34L RECONSTRUCTION

UTILITY LAYOUT PLAN

PROJECT NO. 8494.002

DRAWING U1.4

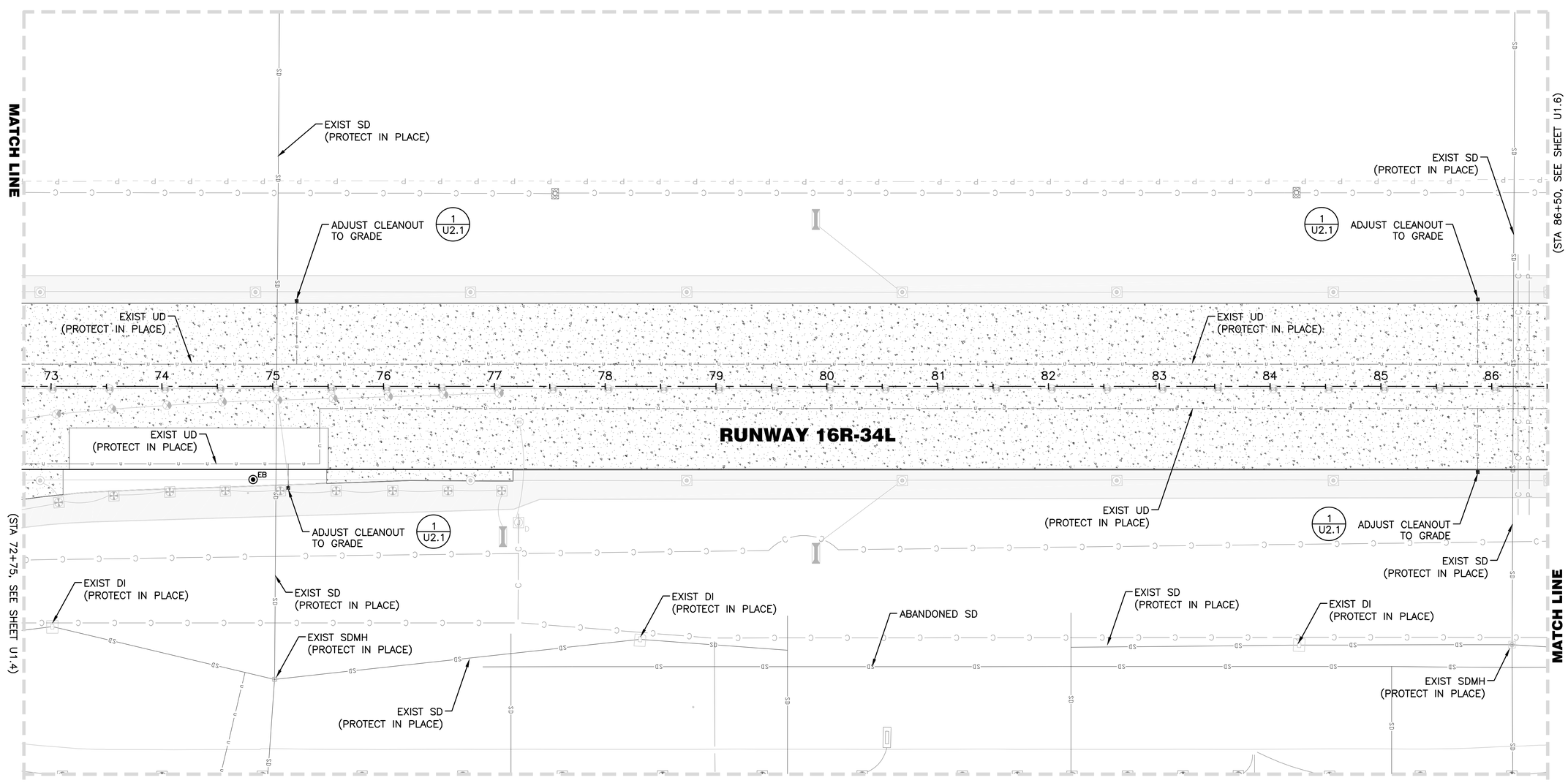

LEGEND

- AC PAVEMENT
- CONCRETE PCC PAVEMENT
- 55 — PROJECT CONTROL STATION

NOTES

1. REFERENCE DRAWING G4.1 FOR ALIGNMENT INFORMATION.
2. REFERENCE DRAWINGS PH0.1–PH4.5 FOR PHASING LIMITATIONS.
3. CONTRACTOR TO VERIFY EXISTING DEPTHS AND LOCATIONS PRIOR TO CONSTRUCTING STORM DRAIN AND UNDERDRAIN PIPING.
4. CONTRACTOR TO PROVIDE TEMPORARY STORM WATER BYPASS AND EROSION PROTECTIONS PER SPECIFICATION P–156. THERE SHALL BE NO DIRECT PAYMENT FOR THIS WORK.
5. REFER TO ELECTRICAL SHEETS FOR ELECTRICAL UTILITY INFORMATION.
6. CONTRACTOR TO PROTECT EXISTING UNDERDRAIN IN PLACE AND RESTORE UNDERDRAIN TRENCH AS SHOWN ON SHEET P1.1 AND U2.4.
7. REFER TO SHEETS P2.1–P2.26 FOR BID LAYOUT INFORMATION.

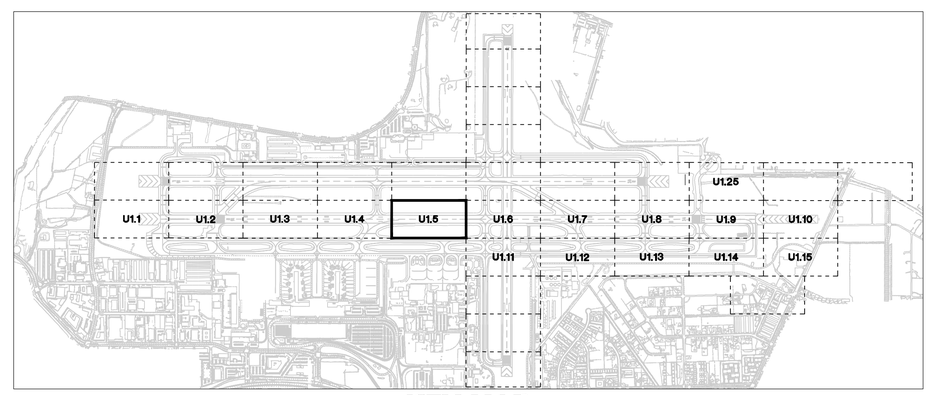

KEY MAP

50' 25' 0 50' 100'

SCALE: 1" = 50'

FOR BIDDING PURPOSES ONLY

NO.	DESCRIPTION	DATE

DATE: DECEMBER 11, 2019
SCALE: N/A
DRAWN BY: DAB
DESIGNED BY: MAK, BAM
CHECKED BY: MAC

PROFESSIONAL ENGINEER - STATE OF NEVADA
BRIAN A. MARTINEZMOLESS
Exp. 12-31-21
CIVIL
No. 21202

WOOD RODGERS
BUILDING RELATIONSHIPS ONE PROJECT AT A TIME
1361 Corporate Blvd
Reno, NV 89502
Tel 775.823.4068
Fax 775.823.4066

Reno–Tahoe International Airport

RUNWAY 16R-34L RECONSTRUCTION

UTILITY LAYOUT PLAN

PROJECT NO. 8494.002

DRAWING U1.5

J:\Jobs\8494_RTIA Runways\RTIA Runway 16R_OA\Civil\Dwg\2-16R-34L_BidPhg2\U0105_16R.dwg 12/9/2019 5:08 PM Trevor Shomblin

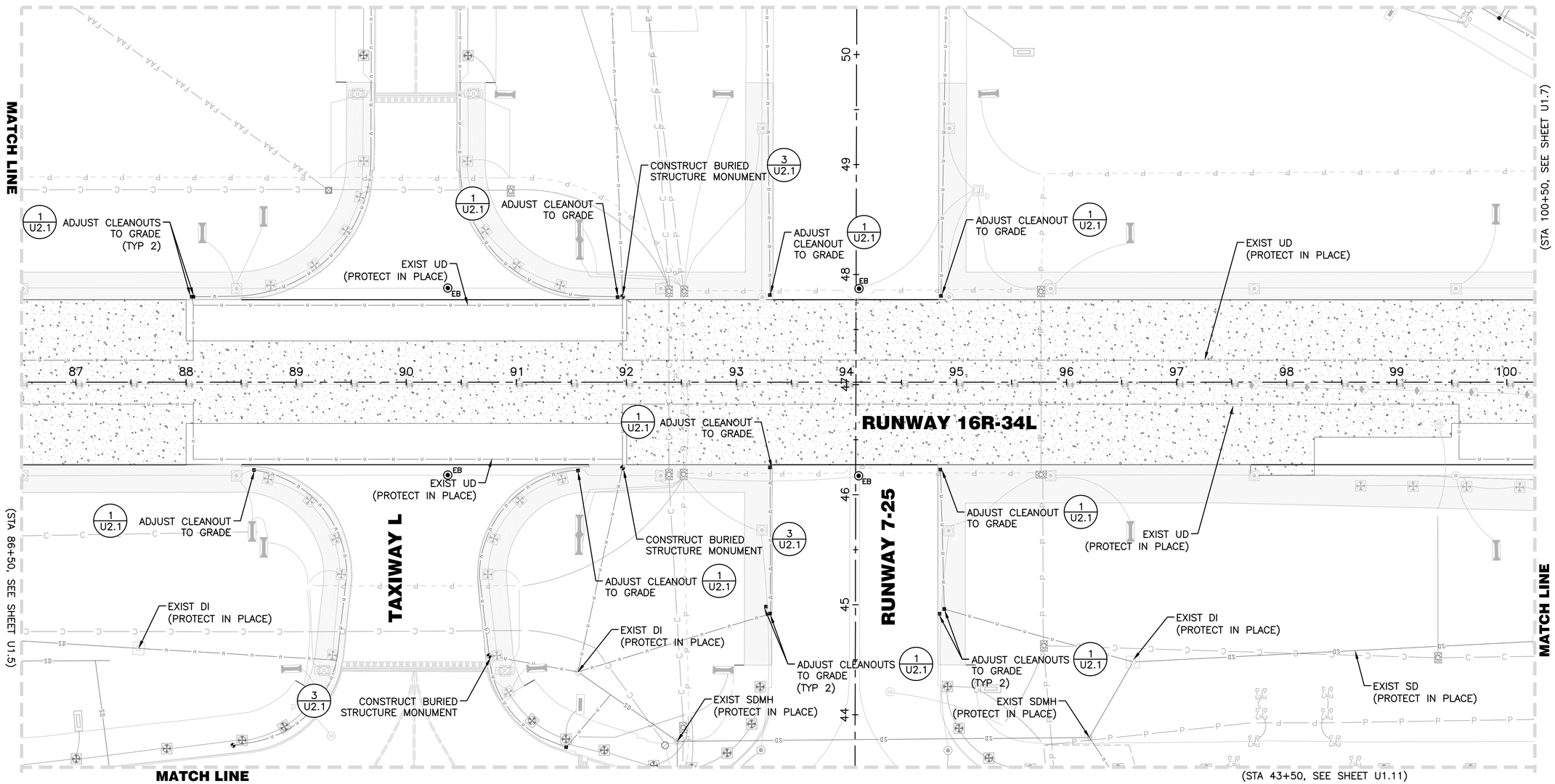

LEGEND

- AC PAVEMENT
- CONCRETE PCC PAVEMENT
- 55 — PROJECT CONTROL STATION

NOTES

1. REFERENCE DRAWING G4.1 FOR ALIGNMENT INFORMATION.
2. REFERENCE DRAWINGS PH0.1–PH4.5 FOR PHASING LIMITATIONS.
3. CONTRACTOR TO VERIFY EXISTING DEPTHS AND LOCATIONS PRIOR TO CONSTRUCTING STORM DRAIN AND UNDERDRAIN PIPING.
4. CONTRACTOR TO PROVIDE TEMPORARY STORM WATER BYPASS AND EROSION PROTECTIONS PER SPECIFICATION P–156. THERE SHALL BE NO DIRECT PAYMENT FOR THIS WORK.
5. REFER TO ELECTRICAL SHEETS FOR ELECTRICAL UTILITY INFORMATION.
6. CONTRACTOR TO PROTECT EXISTING UNDERDRAIN IN PLACE AND RESTORE UNDERDRAIN TRENCH AS SHOWN ON SHEET P1.1 AND U2.4.
7. REFER TO SHEETS P2.1–P2.26 FOR BID LAYOUT INFORMATION.

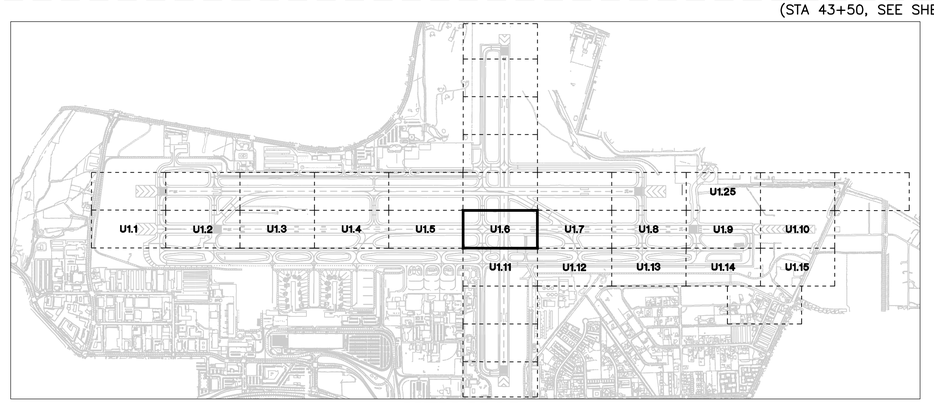

KEY MAP

50' 25' 0 50' 100'

SCALE: 1" = 50'

FOR BIDDING PURPOSES ONLY

NO.	DESCRIPTION	DATE

DATE: DECEMBER 11, 2019
SCALE: N/A
DRAWN BY: DAB
DESIGNED BY: MAK, BAM
CHECKED BY: MAC

BRIAN A. MARTINEZMOLES, Exp. 12-31-21, CIVIL, No. 21202, PROFESSIONAL ENGINEER - STATE OF NEVADA

WOOD RODGERS
BUILDING RELATIONSHIPS ONE PROJECT AT A TIME
1361 Corporate Blvd
Reno, NV 89502
Tel 775.823.4068
Fax 775.823.4066

Reno–Tahoe International Airport

RUNWAY 16R-34L RECONSTRUCTION

UTILITY LAYOUT PLAN

PROJECT NO. 8494.002

DRAWING U1.6

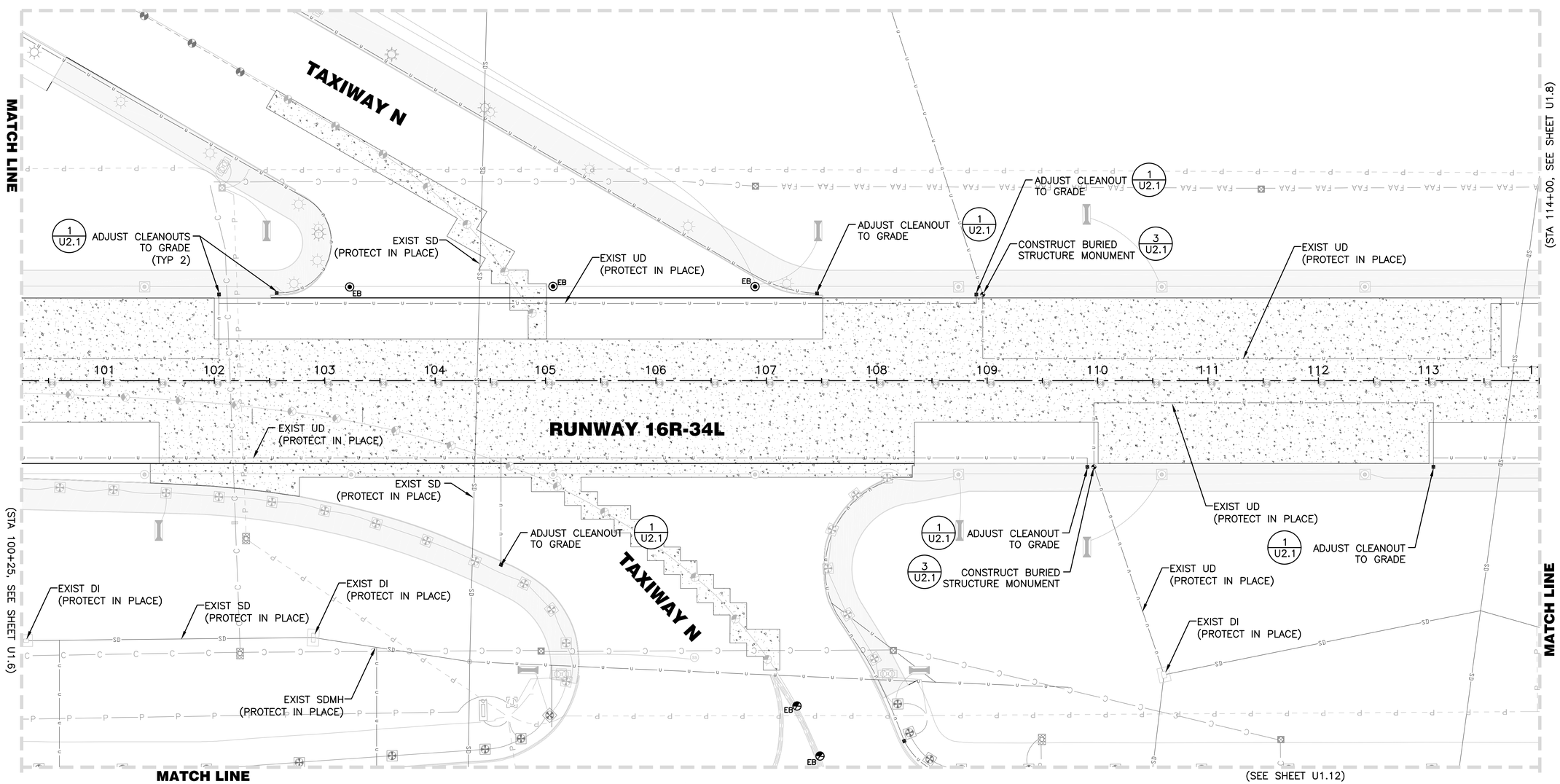

LEGEND

- AC PAVEMENT
- CONCRETE PCC PAVEMENT
- 55 — PROJECT CONTROL STATION

NOTES

1. REFERENCE DRAWING G4.1 FOR ALIGNMENT INFORMATION.
2. REFERENCE DRAWINGS PH0.1–PH4.5 FOR PHASING LIMITATIONS.
3. CONTRACTOR TO VERIFY EXISTING DEPTHS AND LOCATIONS PRIOR TO CONSTRUCTING STORM DRAIN AND UNDERDRAIN PIPING.
4. CONTRACTOR TO PROVIDE TEMPORARY STORM WATER BYPASS AND EROSION PROTECTIONS PER SPECIFICATION P–156. THERE SHALL BE NO DIRECT PAYMENT FOR THIS WORK.
5. REFER TO ELECTRICAL SHEETS FOR ELECTRICAL UTILITY INFORMATION.
6. CONTRACTOR TO PROTECT EXISTING UNDERDRAIN IN PLACE AND RESTORE UNDERDRAIN TRENCH AS SHOWN ON SHEET P1.1 AND U2.4.
7. REFER TO SHEETS P2.1–P2.26 FOR BID LAYOUT INFORMATION.

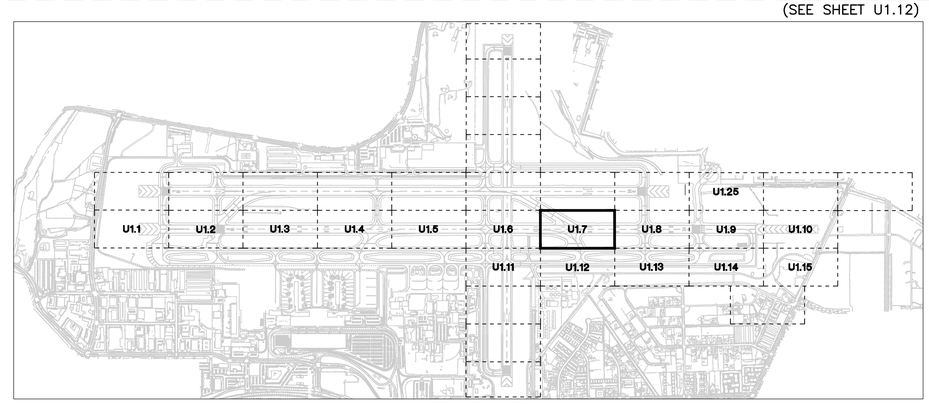

KEY MAP

50' 25' 0 50' 100'

SCALE: 1" = 50'

FOR BIDDING PURPOSES ONLY

NO.	DESCRIPTION	DATE

DATE: DECEMBER 11, 2019
SCALE: N/A
DRAWN BY: DAB
DESIGNED BY: MAK, BAM
CHECKED BY: MAC

BRIAN A. MARTINEZMOLESS
Exp. 12-31-21
CIVIL
No. 21202
PROFESSIONAL ENGINEER - STATE OF NEVADA

WOOD RODGERS
BUILDING RELATIONSHIPS ONE PROJECT AT A TIME
1361 Corporate Blvd
Reno, NV 89502
Tel 775.823.4068
Fax 775.823.4066

Reno–Tahoe International Airport

RUNWAY 16R-34L RECONSTRUCTION

UTILITY LAYOUT PLAN

PROJECT NO. 8494.002

DRAWING U1.7

J:\Jobs\8494_RTIA Runways\RTIA Runway 16R_OA\Civil\Dwg\2-16R-34L_BidPkg2\U0107_16R.dwg 12/9/2019 5:10 PM Trevor Shombin

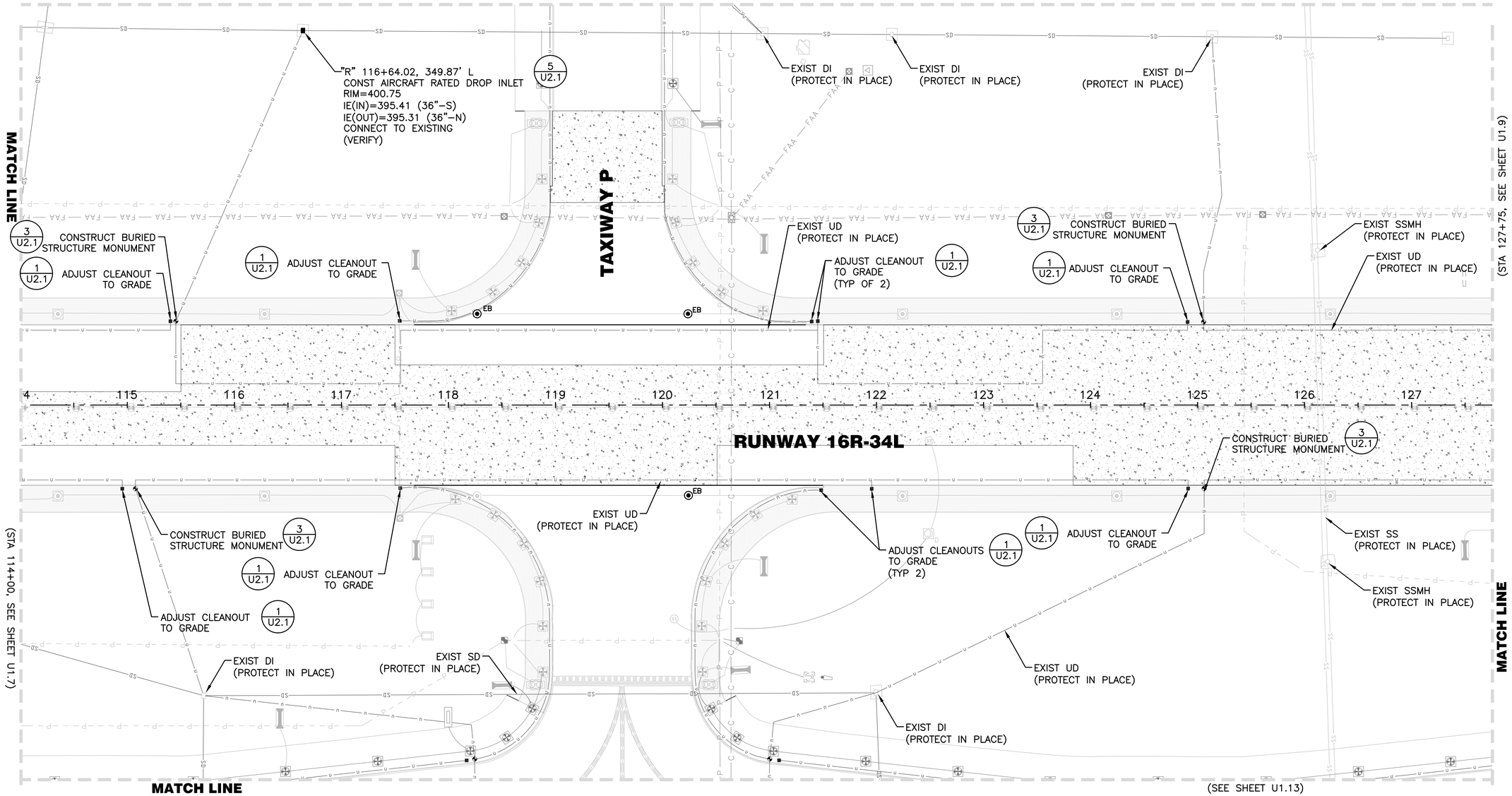

LEGEND

- AC PAVEMENT
- CONCRETE PCC PAVEMENT
- 55 — PROJECT CONTROL STATION

NOTES

1. REFERENCE DRAWING G4.1 FOR ALIGNMENT INFORMATION.
2. REFERENCE DRAWINGS PH0.1–PH4.5 FOR PHASING LIMITATIONS.
3. CONTRACTOR TO VERIFY EXISTING DEPTHS AND LOCATIONS PRIOR TO CONSTRUCTING STORM DRAIN AND UNDERDRAIN PIPING.
4. CONTRACTOR TO PROVIDE TEMPORARY STORM WATER BYPASS AND EROSION PROTECTIONS PER SPECIFICATION P–156. THERE SHALL BE NO DIRECT PAYMENT FOR THIS WORK.
5. REFER TO ELECTRICAL SHEETS FOR ELECTRICAL UTILITY INFORMATION.
6. CONTRACTOR TO PROTECT EXISTING UNDERDRAIN IN PLACE AND RESTORE UNDERDRAIN TRENCH AS SHOWN ON SHEET P1.1 AND U2.4.
7. REFER TO SHEETS P2.1–P2.26 FOR BID LAYOUT INFORMATION.

(SEE SHEET U1.13)

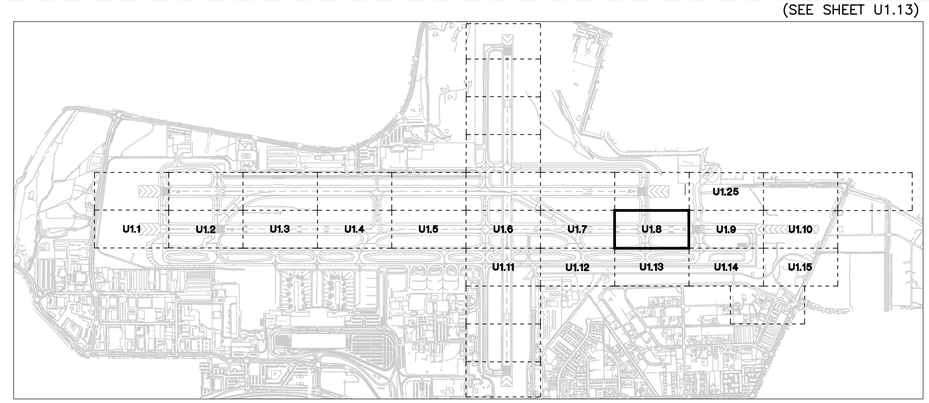

KEY MAP

50' 25' 0 50' 100'

SCALE: 1" = 50'

FOR BIDDING PURPOSES ONLY

NO.	DESCRIPTION	DATE

DATE: DECEMBER 11, 2019
SCALE: N/A
DRAWN BY: DAB
DESIGNED BY: MAK, BAM
CHECKED BY: MAC

PROFESSIONAL ENGINEER - STATE OF NEVADA
BRIAN A. MARTINEZMOLES
Exp. 12-31-21
CIVIL
No. 21202

WOOD RODGERS
BUILDING RELATIONSHIPS ONE PROJECT AT A TIME
Tel 775.823.4068
Fax 775.823.4066
1361 Corporate Blvd
Reno, NV 89502

Reno–Tahoe International Airport

RUNWAY 16R-34L RECONSTRUCTION

UTILITY LAYOUT PLAN

PROJECT NO. 8494.002

DRAWING U1.8

Z:\Jobs\8494_RTIA Runways\RTIA Runway 16R_OA\Civil\Dwg\2-16R-34L_BidPhg2\U0108_16R.dwg 12/9/2019 3:11 PM Trevor Shomblin

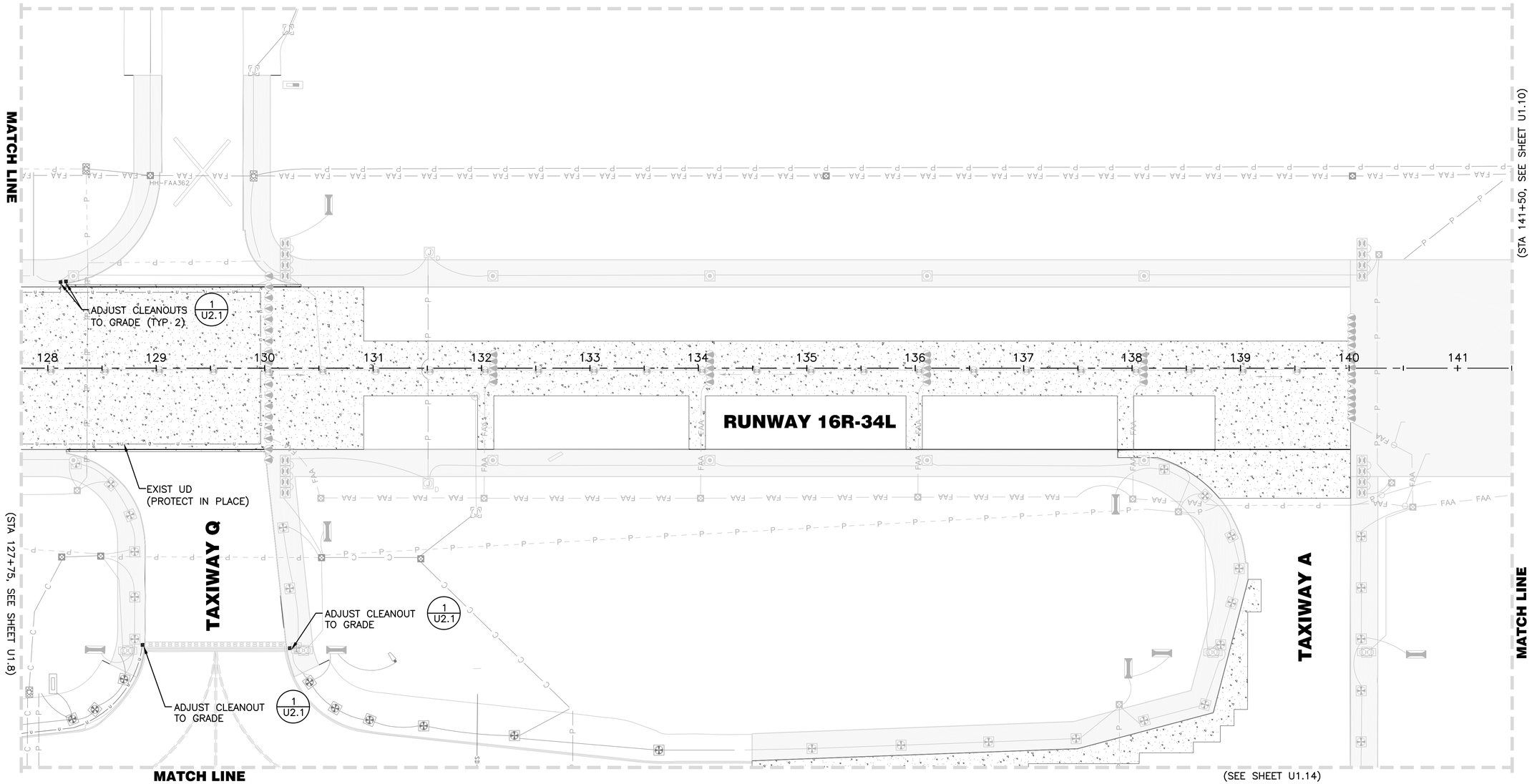

(SEE SHEET U1.14)

LEGEND

- AC PAVEMENT
- CONCRETE PCC PAVEMENT
- 55 — PROJECT CONTROL STATION

NOTES

1. REFERENCE DRAWING G4.1 FOR ALIGNMENT INFORMATION.
2. REFERENCE DRAWINGS PH0.1–PH4.5 FOR PHASING LIMITATIONS.
3. CONTRACTOR TO VERIFY EXISTING DEPTHS AND LOCATIONS PRIOR TO CONSTRUCTING STORM DRAIN AND UNDERDRAIN PIPING.
4. CONTRACTOR TO PROVIDE TEMPORARY STORM WATER BYPASS AND EROSION PROTECTIONS PER SPECIFICATION P–156. THERE SHALL BE NO DIRECT PAYMENT FOR THIS WORK.
5. REFER TO ELECTRICAL SHEETS FOR ELECTRICAL UTILITY INFORMATION.
6. CONTRACTOR TO PROTECT EXISTING UNDERDRAIN IN PLACE AND RESTORE UNDERDRAIN TRENCH AS SHOWN ON SHEET P1.1 AND U2.4.
7. REFER TO SHEETS P2.1–P2.26 FOR BID LAYOUT INFORMATION.

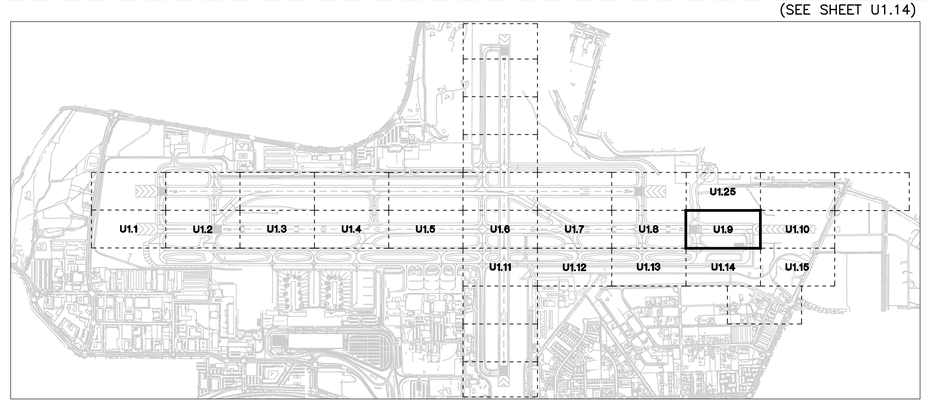

KEY MAP

50' 25' 0 50' 100'

SCALE: 1" = 50'

FOR BIDDING PURPOSES ONLY

NO.	DESCRIPTION	DATE

DATE: DECEMBER 11, 2019
SCALE: N/A
DRAWN BY: DAB
DESIGNED BY: MAK, BAM
CHECKED BY: MAC

PROFESSIONAL ENGINEER - STATE OF NEVADA
BRIAN A. MARTINEZMOLES
Exp. 12-31-21
CIVIL
No. 21202

WOOD RODGERS
BUILDING RELATIONSHIPS ONE PROJECT AT A TIME
1361 Corporate Blvd
Reno, NV 89502
Tel 775.823.4068
Fax 775.823.4066

Reno–Tahoe International Airport

RUNWAY 16R-34L RECONSTRUCTION

UTILITY LAYOUT PLAN

PROJECT NO. 8494.002

DRAWING U1.9

J:\Jobs\8494_RTIA Runways\RTIA Runway 16R_OIA\Civil\Dwg\2-16R-34L_BidPhs2\U0109_16R.dwg 12/9/2019 3:11 PM Trevor Shomblin

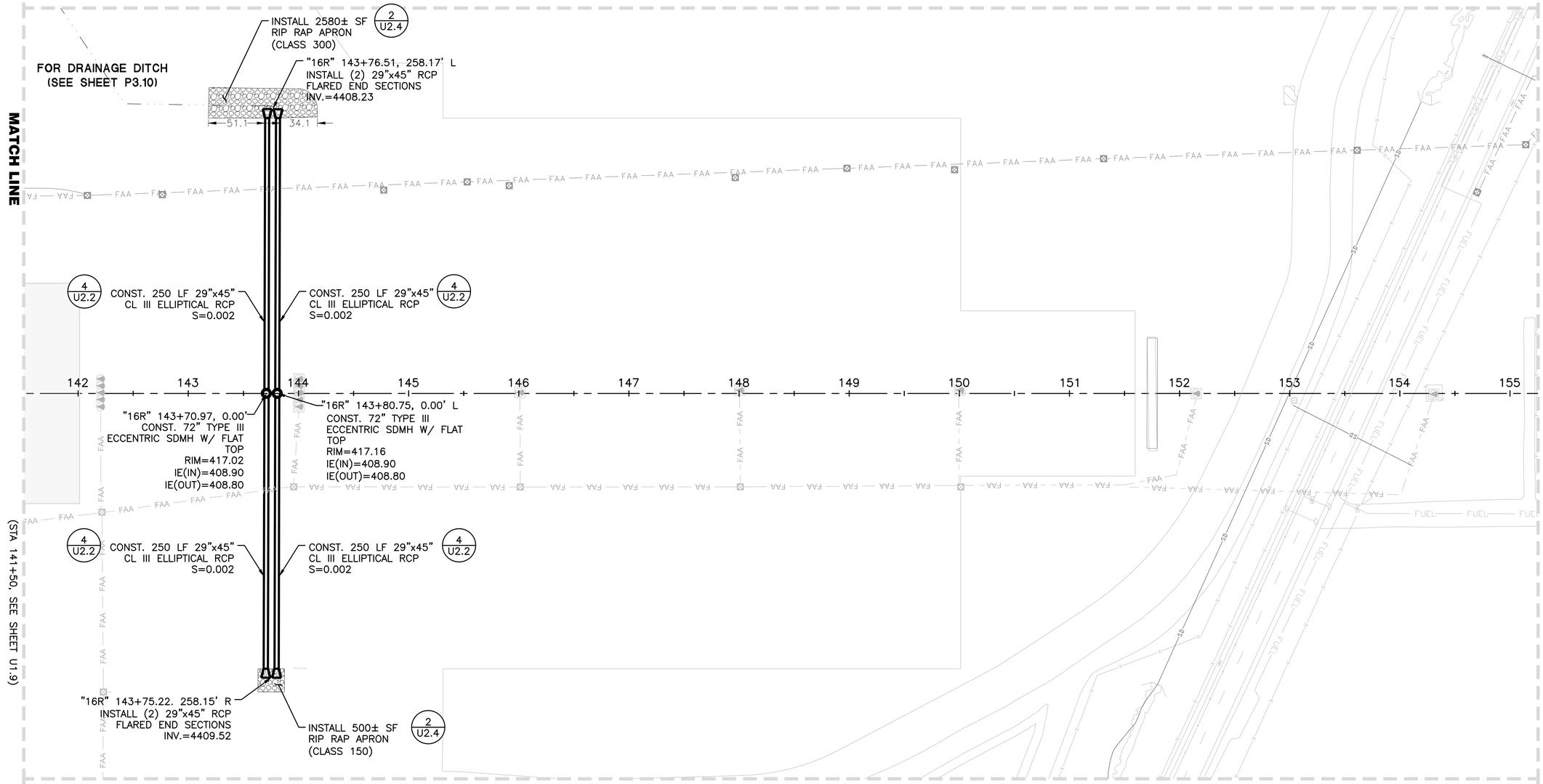

LEGEND

- AC PAVEMENT
- CONCRETE PCC PAVEMENT
- 55 — PROJECT CONTROL STATION

NOTES

1. REFERENCE DRAWING G4.1 FOR ALIGNMENT INFORMATION.
2. REFERENCE DRAWINGS PH0.1–PH4.5 FOR PHASING LIMITATIONS.
3. CONTRACTOR TO VERIFY EXISTING DEPTHS AND LOCATIONS PRIOR TO CONSTRUCTING STORM DRAIN AND UNDERDRAIN PIPING.
4. CONTRACTOR TO PROVIDE TEMPORARY STORM WATER BYPASS AND EROSION PROTECTIONS PER SPECIFICATION P–156. THERE SHALL BE NO DIRECT PAYMENT FOR THIS WORK.
5. REFER TO ELECTRICAL SHEETS FOR ELECTRICAL UTILITY INFORMATION.
6. CONTRACTOR TO PROTECT EXISTING UNDERDRAIN IN PLACE AND RESTORE UNDERDRAIN TRENCH AS SHOWN ON SHEET P1.1 AND U2.4.
7. REFER TO SHEETS P2.1–P2.26 FOR BID LAYOUT INFORMATION.

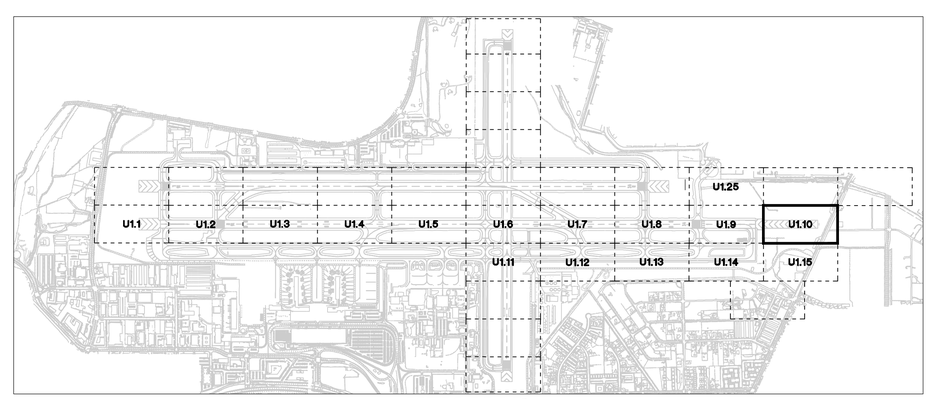

KEY MAP

50' 25' 0 50' 100'

SCALE: 1" = 50'

FOR BIDDING PURPOSES ONLY

NO.	DESCRIPTION	DATE

DATE: DECEMBER 11, 2019
SCALE: N/A
DRAWN BY: DAB
DESIGNED BY: MAK, BAM
CHECKED BY: MAC

PROFESSIONAL ENGINEER - STATE OF NEVADA
BRIAN A. MARTINEZMOLESS
Exp. 12-31-21
CIVIL
No. 21202

WOOD RODGERS
BUILDING RELATIONSHIPS ONE PROJECT AT A TIME
1361 Corporate Blvd
Reno, NV 89502
Tel 775.823.4068
Fax 775.823.4066

Reno–Tahoe International Airport

RUNWAY 16R-34L RECONSTRUCTION

UTILITY LAYOUT PLAN

PROJECT NO. 8494.002

DRAWING U1.10

J:\Jobs\8494_RTIA Runway\RTIA Runway 16R_DA\Civil\Dwg\2-16R-34L_BidPkg2\U0110_16R.dwg 12/9/2019 5:05 PM Trevor Shamblin

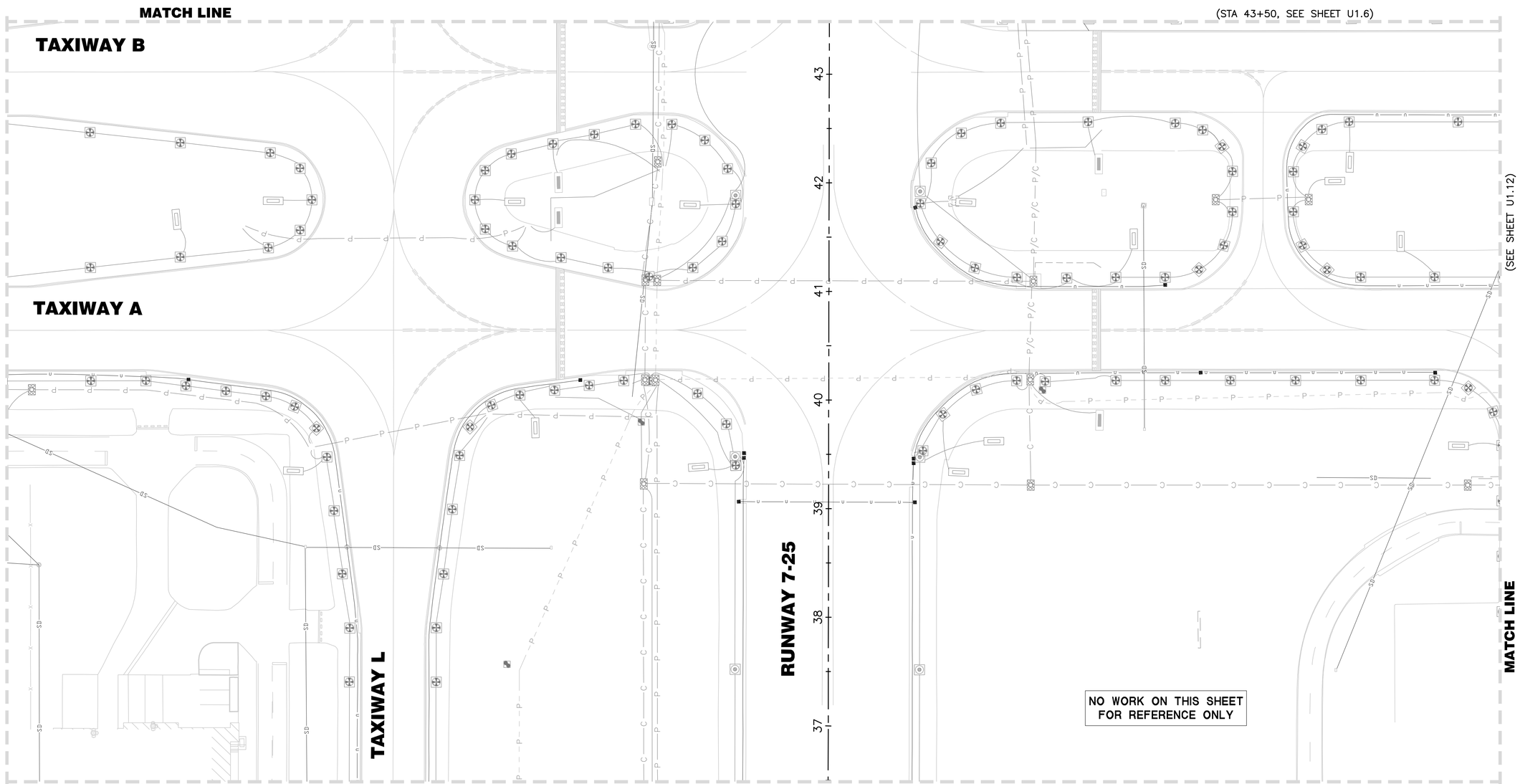

LEGEND

- AC PAVEMENT
- CONCRETE PCC PAVEMENT
- 55 — PROJECT CONTROL STATION

NOTES

1. REFERENCE DRAWING G4.1 FOR ALIGNMENT INFORMATION.
2. REFERENCE DRAWINGS PH0.1–PH4.5 FOR PHASING LIMITATIONS.
3. CONTRACTOR TO VERIFY EXISTING DEPTHS AND LOCATIONS PRIOR TO CONSTRUCTING STORM DRAIN AND UNDERDRAIN PIPING.
4. CONTRACTOR TO PROVIDE TEMPORARY STORM WATER BYPASS AND EROSION PROTECTIONS PER SPECIFICATION P–156. THERE SHALL BE NO DIRECT PAYMENT FOR THIS WORK.
5. REFER TO ELECTRICAL SHEETS FOR ELECTRICAL UTILITY INFORMATION.
6. CONTRACTOR TO PROTECT EXISTING UNDERDRAIN IN PLACE AND RESTORE UNDERDRAIN TRENCH AS SHOWN ON SHEET P1.1 AND U2.4.
7. REFER TO SHEETS P2.1–P2.26 FOR BID LAYOUT INFORMATION.

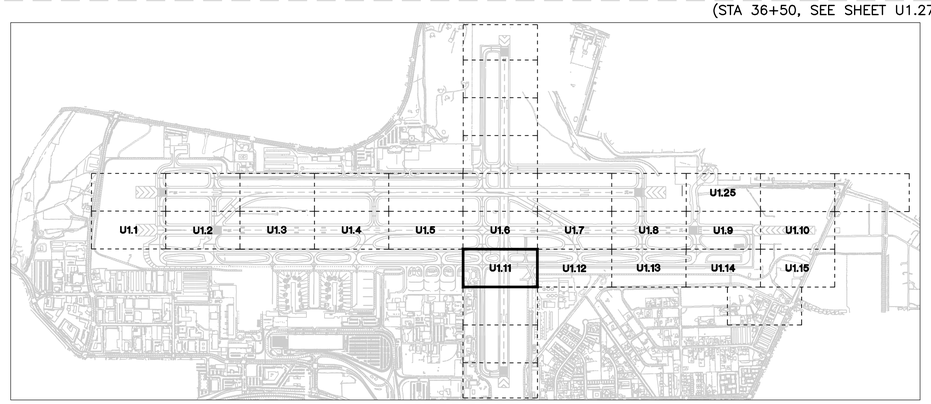

KEY MAP

50' 25' 0 50' 100'

SCALE: 1" = 50'

FOR BIDDING PURPOSES ONLY

NO.	DESCRIPTION	DATE

DATE: DECEMBER 11, 2019
SCALE: N/A
DRAWN BY: DAB
DESIGNED BY: MAK, BAM
CHECKED BY: MAC

PROFESSIONAL ENGINEER - STATE OF NEVADA
BRIAN A. MARTINEZMOLES
Exp. 12-31-21
CIVIL
No. 21202

WOOD RODGERS
BUILDING RELATIONSHIPS ONE PROJECT AT A TIME
1361 Corporate Blvd
Reno, NV 89502
Tel 775.823.4068
Fax 775.823.4066

Reno–Tahoe International Airport

RUNWAY 16R-34L RECONSTRUCTION

UTILITY LAYOUT PLAN

PROJECT NO. 8494.002

DRAWING U1.11

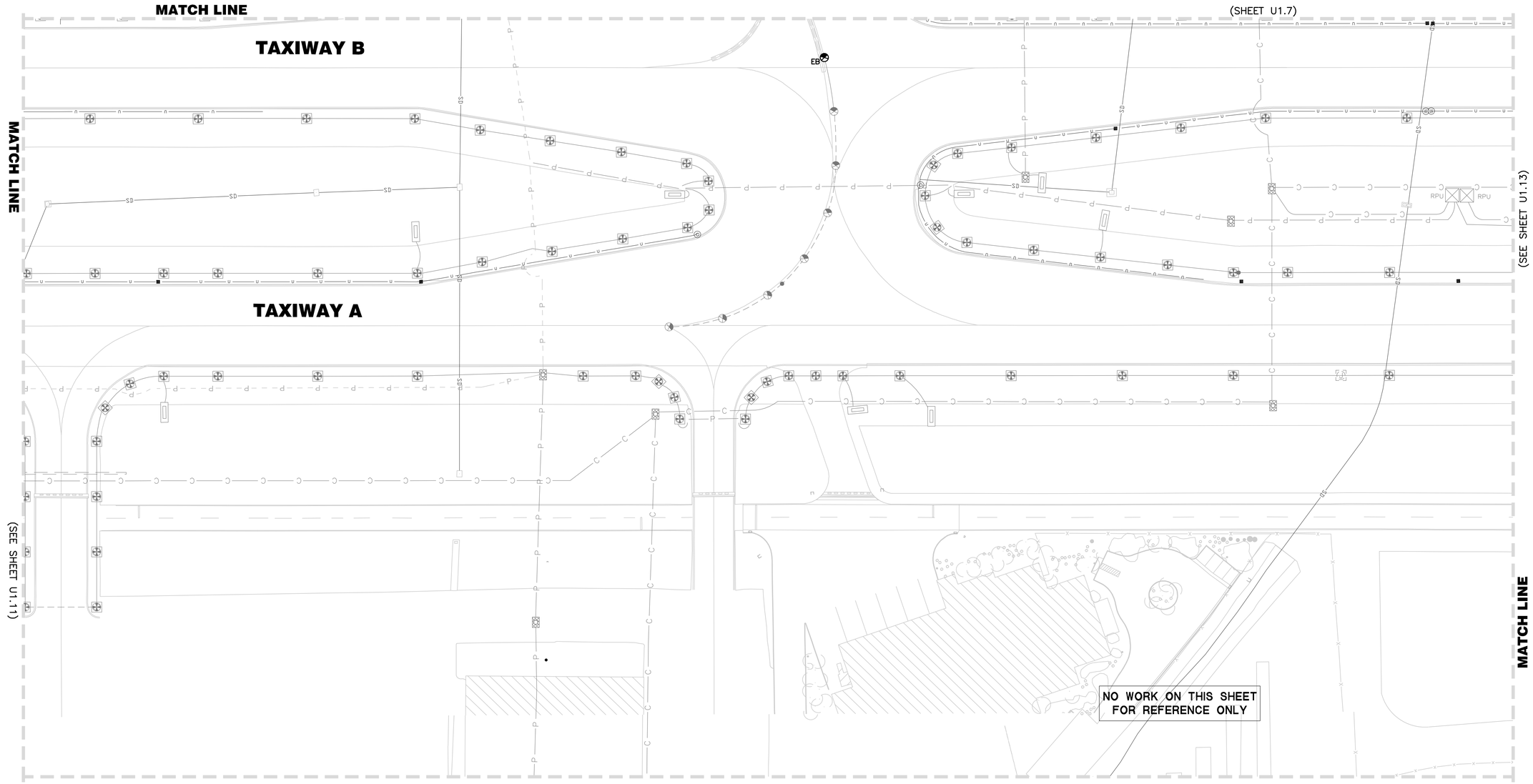

LEGEND

- AC PAVEMENT
- CONCRETE PCC PAVEMENT
- 55 — PROJECT CONTROL STATION

NOTES

1. REFERENCE DRAWING G4.1 FOR ALIGNMENT INFORMATION.
2. REFERENCE DRAWINGS PH0.1–PH4.5 FOR PHASING LIMITATIONS.
3. CONTRACTOR TO VERIFY EXISTING DEPTHS AND LOCATIONS PRIOR TO CONSTRUCTING STORM DRAIN AND UNDERDRAIN PIPING.
4. CONTRACTOR TO PROVIDE TEMPORARY STORM WATER BYPASS AND EROSION PROTECTIONS PER SPECIFICATION P–156. THERE SHALL BE NO DIRECT PAYMENT FOR THIS WORK.
5. REFER TO ELECTRICAL SHEETS FOR ELECTRICAL UTILITY INFORMATION.
6. CONTRACTOR TO PROTECT EXISTING UNDERDRAIN IN PLACE AND RESTORE UNDERDRAIN TRENCH AS SHOWN ON SHEET P1.1 AND U2.4.
7. REFER TO SHEETS P2.1–P2.26 FOR BID LAYOUT INFORMATION.

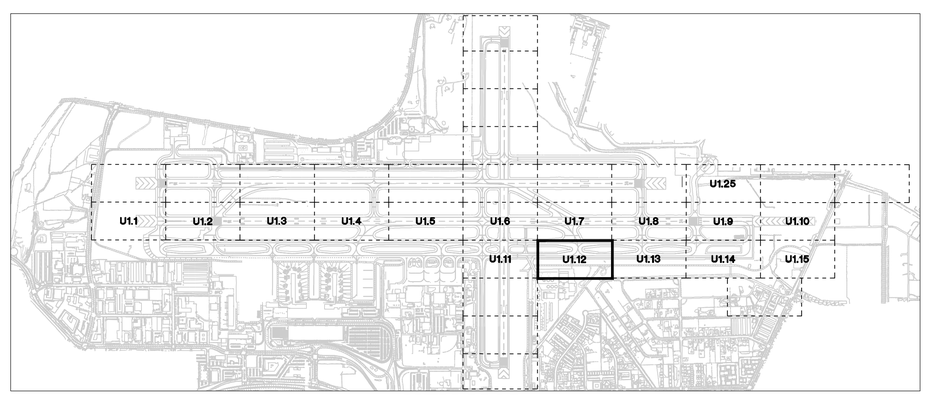

KEY MAP

50' 25' 0 50' 100'

SCALE: 1" = 50'

FOR BIDDING PURPOSES ONLY

NO.	DESCRIPTION	DATE

DATE: DECEMBER 11, 2019
SCALE: N/A
DRAWN BY: DAB
DESIGNED BY: MAK, BAM
CHECKED BY: MAC

PROFESSIONAL ENGINEER - STATE OF NEVADA
BRIAN A. MARTINEZMOLES
Exp. 12-31-21
CIVIL
No. 21202

WOOD RODGERS
BUILDING RELATIONSHIPS ONE PROJECT AT A TIME
1361 Corporate Blvd
Reno, NV 89502
Tel 775.823.4068
Fax 775.823.4066

Reno–Tahoe International Airport

RUNWAY 16R-34L RECONSTRUCTION

UTILITY LAYOUT PLAN

PROJECT NO. 8494.002

DRAWING U1.12

J:\Jobs\8494_RTIA Runways\RTIA Runway 16R_OA\Civil\Dwg\2-16R-34L_BidPkg2\U0112_16R.dwg 12/9/2019 5:06 PM Trevor Shomblin

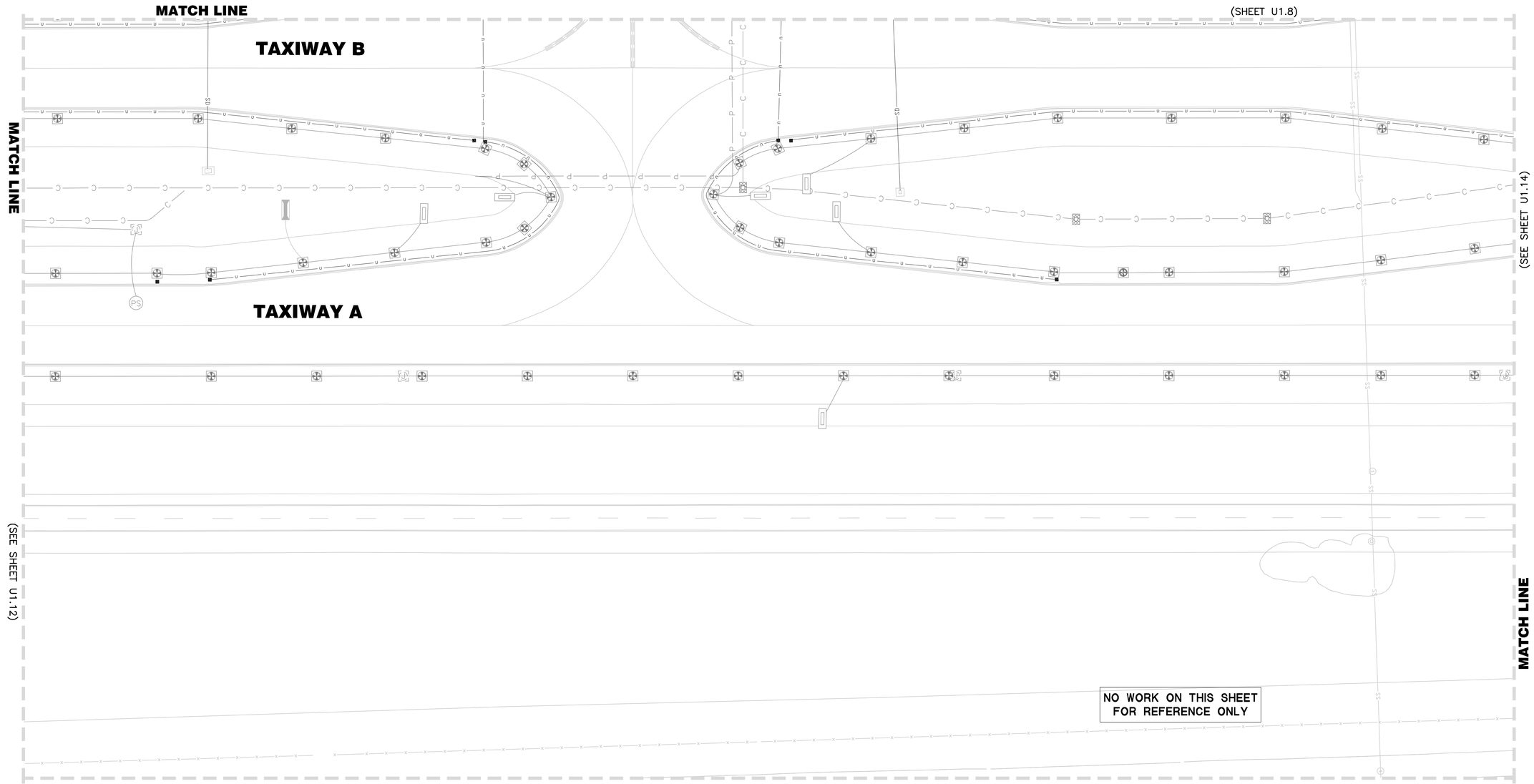

LEGEND

- AC PAVEMENT
- CONCRETE PCC PAVEMENT
- 55 — PROJECT CONTROL STATION

NOTES

1. REFERENCE DRAWING G4.1 FOR ALIGNMENT INFORMATION.
2. REFERENCE DRAWINGS PH0.1–PH4.5 FOR PHASING LIMITATIONS.
3. CONTRACTOR TO VERIFY EXISTING DEPTHS AND LOCATIONS PRIOR TO CONSTRUCTING STORM DRAIN AND UNDERDRAIN PIPING.
4. CONTRACTOR TO PROVIDE TEMPORARY STORM WATER BYPASS AND EROSION PROTECTIONS PER SPECIFICATION P–156. THERE SHALL BE NO DIRECT PAYMENT FOR THIS WORK.
5. REFER TO ELECTRICAL SHEETS FOR ELECTRICAL UTILITY INFORMATION.
6. CONTRACTOR TO PROTECT EXISTING UNDERDRAIN IN PLACE AND RESTORE UNDERDRAIN TRENCH AS SHOWN ON SHEET P1.1 AND U2.4.
7. REFER TO SHEETS P2.1–P2.26 FOR BID LAYOUT INFORMATION.

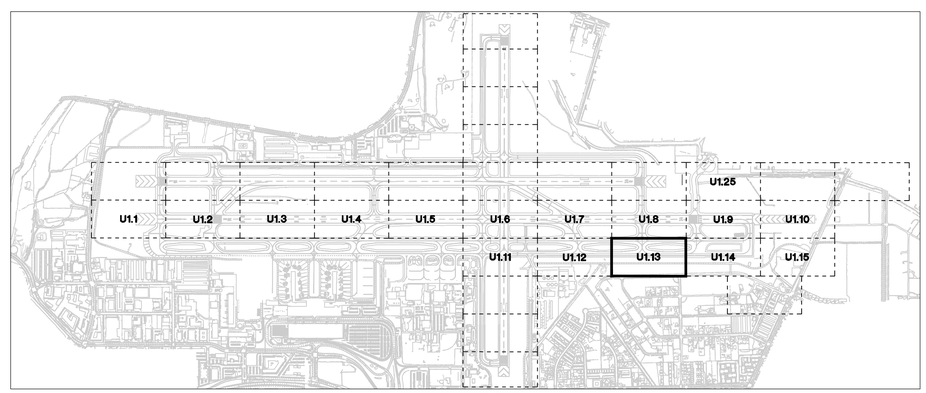

KEY MAP

50' 25' 0 50' 100'

SCALE: 1" = 50'

FOR BIDDING PURPOSES ONLY

NO.	DESCRIPTION	DATE

DATE: DECEMBER 11, 2019
SCALE: N/A
DRAWN BY: DAB
DESIGNED BY: MAK, BAM
CHECKED BY: MAC

PROFESSIONAL ENGINEER - STATE OF NEVADA
BRIAN A. MARTINEZMOLESS
Exp. 12-31-21
CIVIL
No. 21202

WOOD RODGERS
BUILDING RELATIONSHIPS ONE PROJECT AT A TIME
1361 Corporate Blvd
Reno, NV 89502
Tel 775.823.4068
Fax 775.823.4066

Reno–Tahoe International Airport

RUNWAY 16R-34L RECONSTRUCTION

UTILITY LAYOUT PLAN

PROJECT NO. 8494.002

DRAWING U1.13

J:\Jobs\8494_RTIA Runways\RTIA Runway 16R_DA\Civil\Dwg\2-16R-34L_BidPhs2\U0113_16R.dwg 12/9/2019 5:07 PM Trevor Shomblin

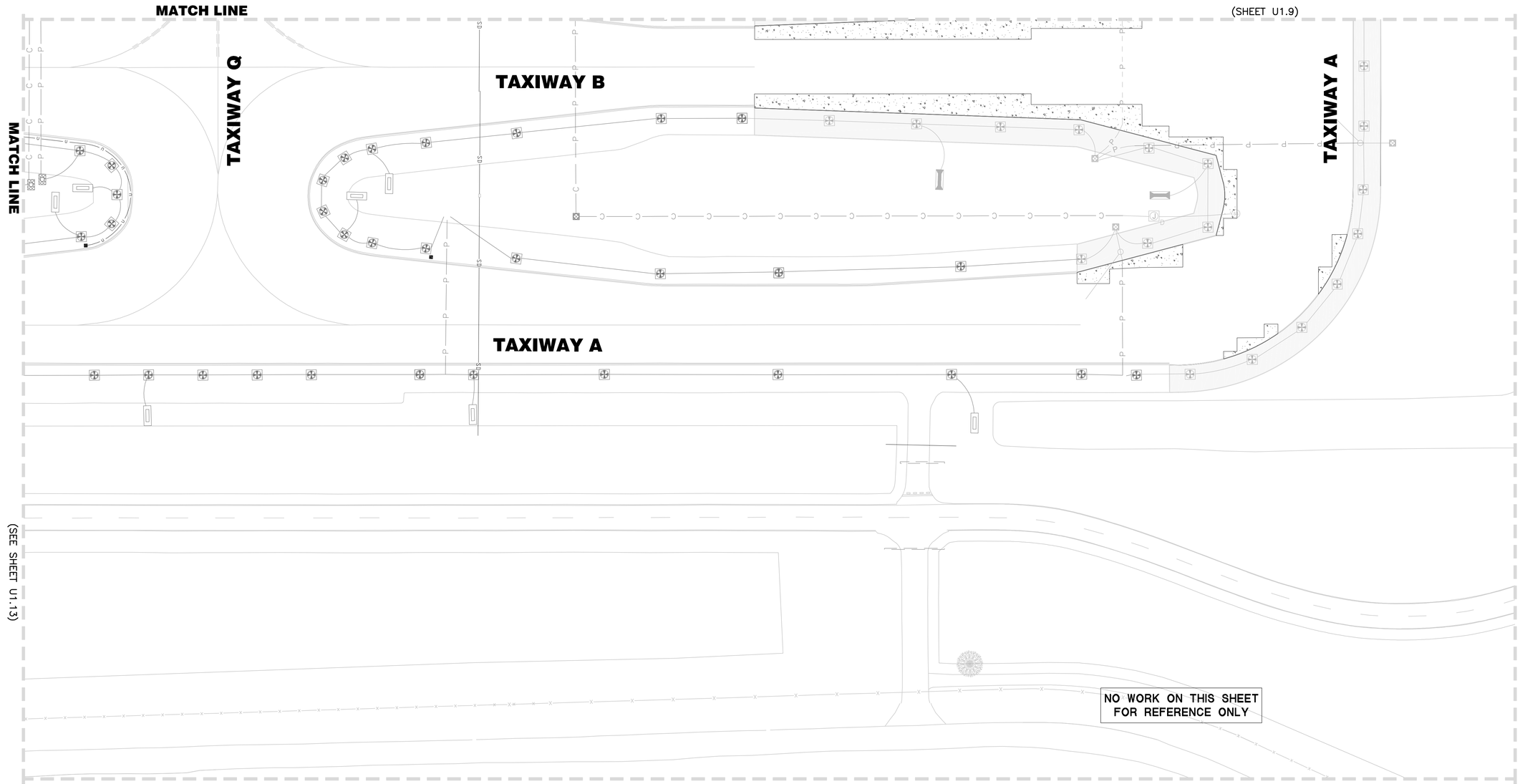

LEGEND

- AC PAVEMENT
- CONCRETE PCC PAVEMENT
- 55 PROJECT CONTROL STATION

NOTES

1. REFERENCE DRAWING G4.1 FOR ALIGNMENT INFORMATION.
2. REFERENCE DRAWINGS PH0.1–PH4.5 FOR PHASING LIMITATIONS.
3. CONTRACTOR TO VERIFY EXISTING DEPTHS AND LOCATIONS PRIOR TO CONSTRUCTING STORM DRAIN AND UNDERDRAIN PIPING.
4. CONTRACTOR TO PROVIDE TEMPORARY STORM WATER BYPASS AND EROSION PROTECTIONS PER SPECIFICATION P–156. THERE SHALL BE NO DIRECT PAYMENT FOR THIS WORK.
5. REFER TO ELECTRICAL SHEETS FOR ELECTRICAL UTILITY INFORMATION.
6. CONTRACTOR TO PROTECT EXISTING UNDERDRAIN IN PLACE AND RESTORE UNDERDRAIN TRENCH AS SHOWN ON SHEET P1.1 AND U2.4.
7. REFER TO SHEETS P2.1–P2.26 FOR BID LAYOUT INFORMATION.

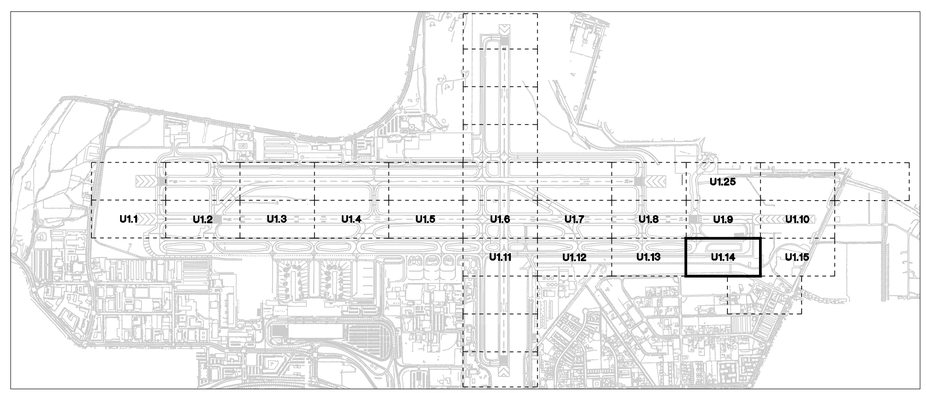

KEY MAP

50' 25' 0 50' 100'

SCALE: 1" = 50'

FOR BIDDING PURPOSES ONLY

NO.	DESCRIPTION	DATE

DATE: DECEMBER 11, 2019
SCALE: N/A
DRAWN BY: DAB
DESIGNED BY: MAK, BAM
CHECKED BY: MAC

PROFESSIONAL ENGINEER - STATE OF NEVADA
BRIAN A. MARTINEZMOLESS
Exp. 12-31-21
CIVIL
No. 21202

WOOD RODGERS
BUILDING RELATIONSHIPS ONE PROJECT AT A TIME
1361 Corporate Blvd
Reno, NV 89502
Tel 775.823.4068
Fax 775.823.4066

Reno–Tahoe International Airport

RUNWAY 16R-34L RECONSTRUCTION

UTILITY LAYOUT PLAN

PROJECT NO. 8494.002

DRAWING U1.14

J:\Jobs\8494_RTIA Runways\RTIA Runway 16R_DA\Civil\Dwg\2-16R-34L_BidPhg2\U0114_16R.dwg 12/9/2019 5:08 PM Trevor Shomblin

LEGEND

- AC PAVEMENT
- CONCRETE PCC PAVEMENT
- 55 — PROJECT CONTROL STATION

NOTES

1. REFERENCE DRAWING G4.1 FOR ALIGNMENT INFORMATION.
2. REFERENCE DRAWINGS PH0.1–PH4.5 FOR PHASING LIMITATIONS.
3. CONTRACTOR TO VERIFY EXISTING DEPTHS AND LOCATIONS PRIOR TO CONSTRUCTING STORM DRAIN AND UNDERDRAIN PIPING.
4. CONTRACTOR TO PROVIDE TEMPORARY STORM WATER BYPASS AND EROSION PROTECTIONS PER SPECIFICATION P–156. THERE SHALL BE NO DIRECT PAYMENT FOR THIS WORK.
5. REFER TO ELECTRICAL SHEETS FOR ELECTRICAL UTILITY INFORMATION.
6. CONTRACTOR TO PROTECT EXISTING UNDERDRAIN IN PLACE AND RESTORE UNDERDRAIN TRENCH AS SHOWN ON SHEET P1.1 AND U2.4.
7. REFER TO SHEETS P2.1–P2.26 FOR BID LAYOUT INFORMATION.

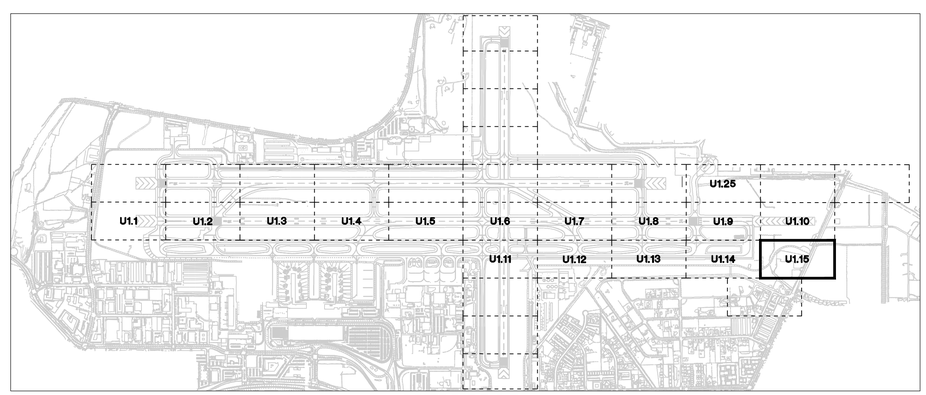

KEY MAP

50' 25' 0 50' 100'

SCALE: 1" = 50'

FOR BIDDING PURPOSES ONLY

NO.	DESCRIPTION	DATE

DATE: DECEMBER 11, 2019
SCALE: N/A
DRAWN BY: DAB
DESIGNED BY: MAK, BAM
CHECKED BY: MAC

PROFESSIONAL ENGINEER - STATE OF NEVADA
BRIAN A. MARTINEZMOLES
Exp. 12-31-21
CIVIL
No. 21202

WOOD RODGERS
BUILDING RELATIONSHIPS ONE PROJECT AT A TIME
1361 Corporate Blvd
Reno, NV 89502
Tel 775.823.4068
Fax 775.823.4066

Reno–Tahoe International Airport

RUNWAY 16R-34L RECONSTRUCTION

UTILITY LAYOUT PLAN

PROJECT NO. 8494.002

DRAWING U1.15

J:\Jobs\8494_RTIA Runways\RTIA Runway 16R_OA\Civil\Dwg\2-16R-34L_BidPkg2\U0115_16R.dwg 12/9/2019 5:08 PM Trevor Shomblin

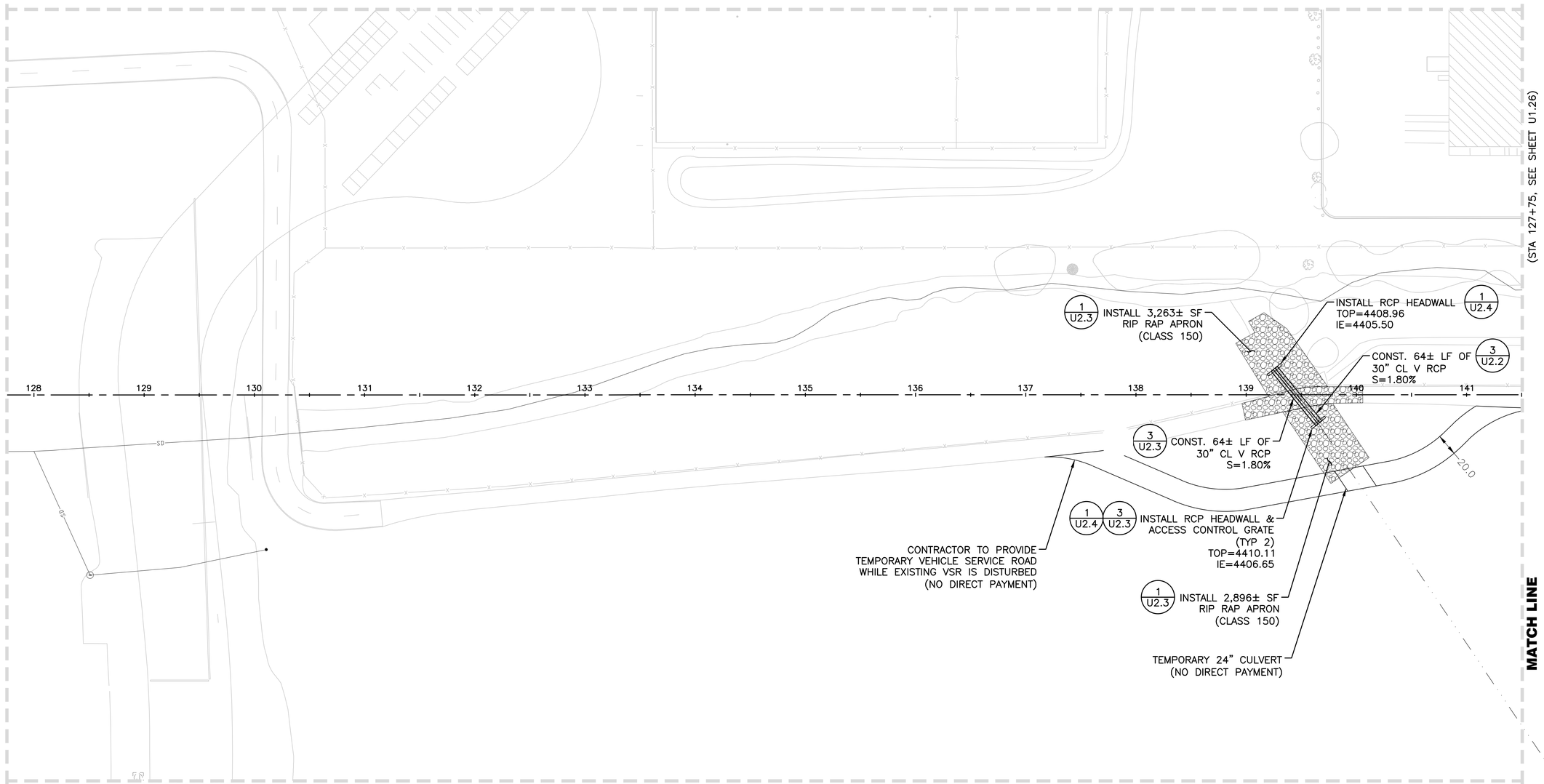

LEGEND:

AC PAVEMENT

55 PROJECT CONTROL STATION

NOTES:

1. REFERENCE DRAWING G4.1 FOR ALIGNMENT INFORMATION.
2. REFERENCE DRAWINGS PH1.1–PHX.X FOR PHASING LIMITATIONS.
3. CONTRACTOR TO VERIFY EXISTING DEPTHS AND LOCATIONS PRIOR TO CONSTRUCTING STORM DRAIN AND UNDERDRAIN PIPING.
4. CONTRACTOR TO PROVIDE TEMPORARY STORM WATER BYPASS AND EROSION PROTECTIONS PER SPECIFICATION P–156. THERE SHALL BE NO DIRECT PAYMENT FOR THIS WORK.

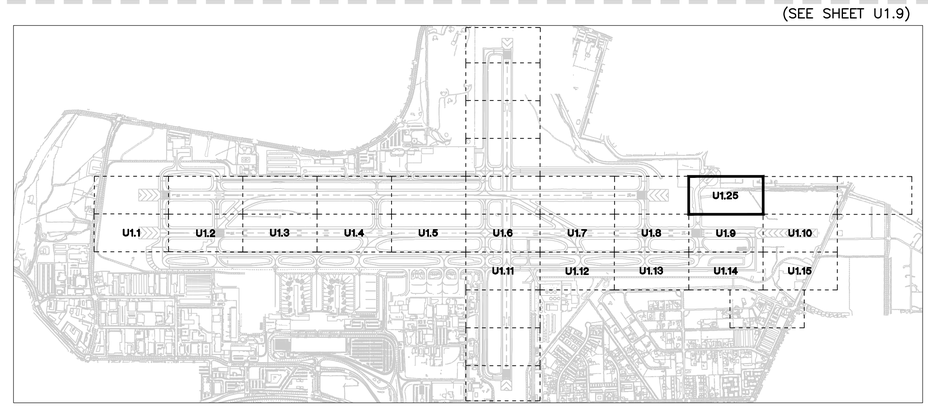

KEY MAP

50' 25' 0 50' 100'

SCALE: 1" = 50'

FOR BIDDING PURPOSES ONLY

NO.	DESCRIPTION	DATE

DATE: DECEMBER 11, 2019
SCALE: N/A
DRAWN BY: DAB
DESIGNED BY: MAK, BAM
CHECKED BY: MAC

PROFESSIONAL ENGINEER - STATE OF NEVADA
BRIAN A. MARTINEZMOLES
Exp. 12-31-21
CIVIL
No. 21202

WOOD RODGERS
BUILDING RELATIONSHIPS ONE PROJECT AT A TIME
1361 Corporate Blvd
Reno, NV 89502
Tel 775.823.4068
Fax 775.823.4066

Reno–Tahoe International Airport

RUNWAY 16R-34L RECONSTRUCTION

UTILITY LAYOUT PLAN

PROJECT NO. 8494.002

DRAWING U1.25

J:\Jobs\8494_RTIA Runway\RTIA Runway 16R_DA\Civil\Dwg\2-16R-34L_BidPhg2\U0125_16R.dwg 12/9/2019 5:09 PM Trevor Shemblin

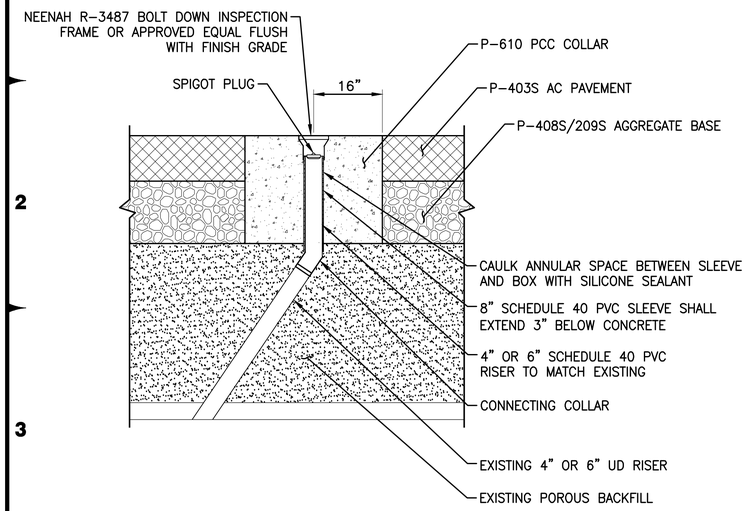

1 U2.1 ADJUST CLEANOUT TO GRADE

N.T.S.

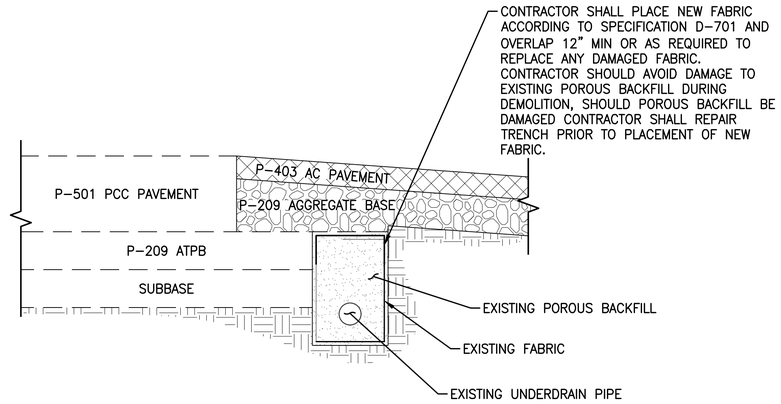

RUNWAY / TAXIWAY SHOULDER

2 U2.1 UNDERDRAIN RESTORATION

N.T.S.

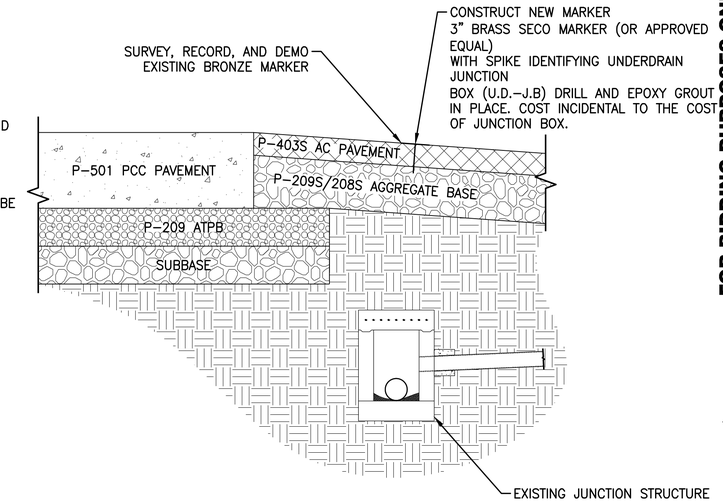

SECTION VIEW

N.T.S.

3 U2.1 BURIED STRUCTURE MONUMENT

N.T.S.

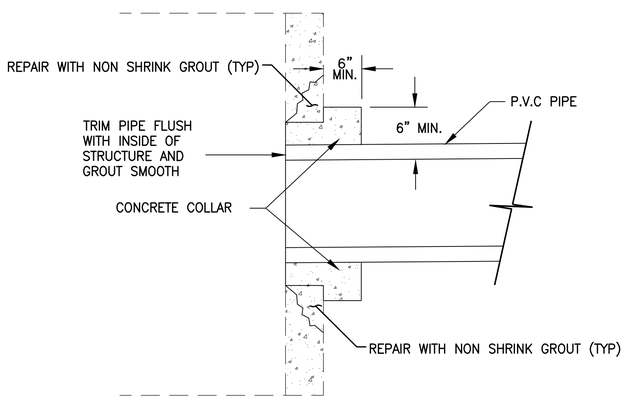

4 U2.1 PVC DI/JUNCTION BOX CONNECTION

N.T.S.

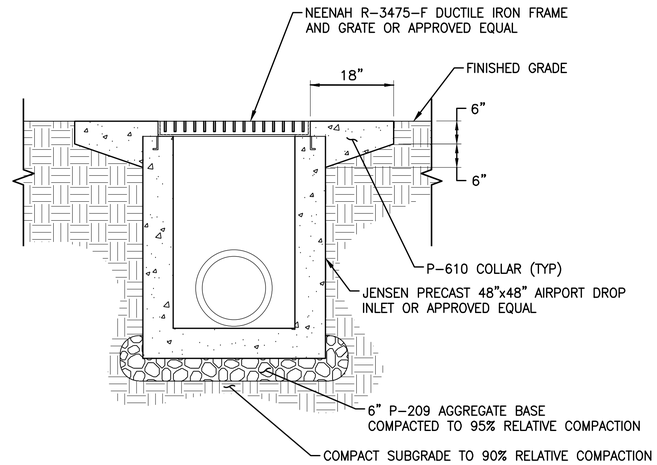

5 U2.1 48"x60" AIRCRAFT RATED DROP INLET

N.T.S.

NOTES

1. DEPTH OF COLLAR SHALL BE CONSISTENT ALL AROUND DRAINAGE INLET AND FLUSH WITH FINISH GRADE.
2. GRATE SHALL BE BOLTED DOWN WITH GRADE 8 HEX HEAD BOLTS WITH LOCK WASHER. ANTI-SIEZE COMPOUND SHALL BE APPLIED TO BOLTS PRIOR TO INSTALLATION.
3. PRECAST DRAINAGE INLET COMPONENTS SHALL CONFORM TO SPECIFICATION D-751 AND SHALL BE AIRCRAFT RATED PER FAA AC150/5320-6E, APPENDIX 3 LOADING REQUIREMENTS.

FOR BIDDING PURPOSES ONLY

NO.	DESCRIPTION	DATE

DATE: DECEMBER 11, 2019
SCALE: N/A
DRAWN BY: TWS
DESIGNED BY: MAK, BAM
CHECKED BY: MAC

BRIAN A. MARTINEZMOLES
PROFESSIONAL ENGINEER - STATE OF NEVADA
Exp. 12-31-21
CIVIL
No. 21202

WOOD RODGERS
BUILDING RELATIONSHIPS ONE PROJECT AT A TIME
1361 Corporate Blvd
Reno, NV 89502
Tel 775.823.4068
Fax 775.823.4066

Reno-Tahoe International Airport

RUNWAY 16R-34L RECONSTRUCTION

UTILITY DETAILS

PROJECT NO. 8494.002

DRAWING U2.1

J:\Jobs\8494_RTIA Runway\RTIA Runway 16R_DA\Civil\Dwg\2-16R-34L_BidFlig2\U0201_16R.dwg 12/9/2019 5:09 PM Trevor Shomblin

TYPE 3 ECCENTRIC	
MATERIAL	PIPE SIZE
ROUND RCP	48" MAX.
CONCRETE ARCH P	26-5/8" x 43-3/4" (36" EQV) MAX.
CONCRETE ELLIPTIC	24"x38" (30" ECV) 27"x42" (33"EQV), 29"x45" (36"EQV) MAX.
HDPE	48" MAX.
CMP	48" MAX.

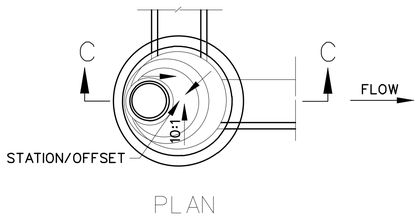

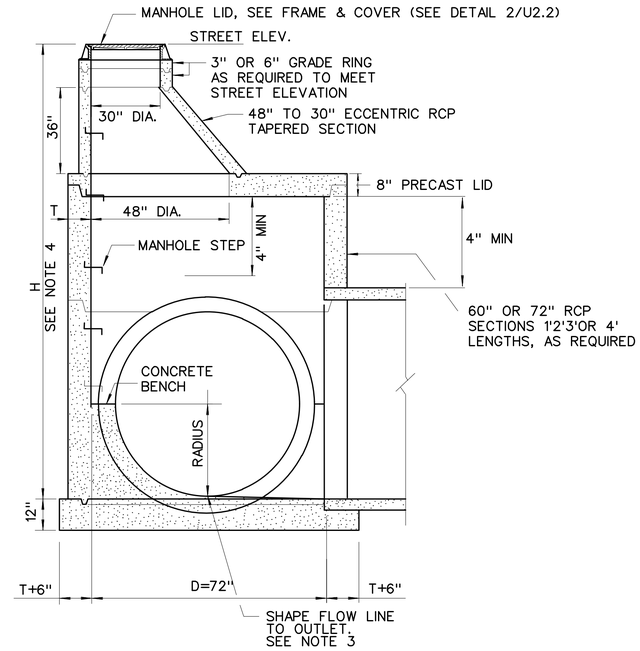

1 / U2.2 TYPE 3 ECCENTRIC MANHOLE

N.T.S.

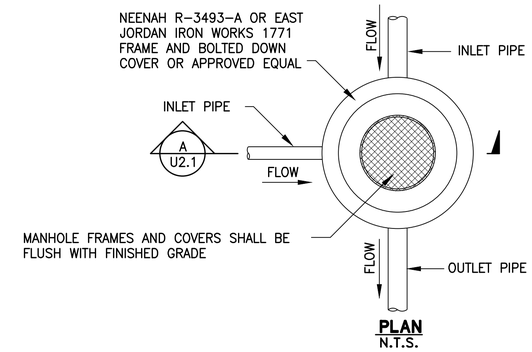

NOTES:

1. DEPTH OF COLLAR SHALL BE CONSISTENT ALL AROUND MANHOLE AND FLUSH WITH FINISH GRADE.
2. JOINTING OF CONCRETE PANELS AROUND MANHOLE MAY BE ADJUSTED BY ENGINEER IN THE FIELD PRIOR TO FINAL JOINT SETUP TO REDUCE PANEL STRESSES. CONTACT ENGINEER 24 HOURS IN ADVANCE OF FINAL JOINTING LAYOUT FOR ENGINEER APPROVAL OF JOINTING AROUND MANHOLES.
3. MANHOLE COVERS SHALL BE BOLTED DOWN WITH GRADE 8 HEX HEAD BOLTS WITH LOCK WASHERS. ANTI-SIEZE COMPOUND SHALL BE APPLIED TO BOLTS PRIOR TO INSTALLATION.
4. PRECAST MANHOLE COMPONENTS SHALL CONFORM TO SPECIFICATION D-751 AND SHALL BE AIRCRAFT RATED PER FAA AC150/5320-6E, APPENDIX 3 LOADING REQUIREMENTS.
5. CONNECT PVC PIPES TO MANHOLES IN ACCORDANCE WITH DETAIL 2/U2.2.

2 / U2.2 STORM DRAIN MANHOLE FRAME & COVER

N.T.S.

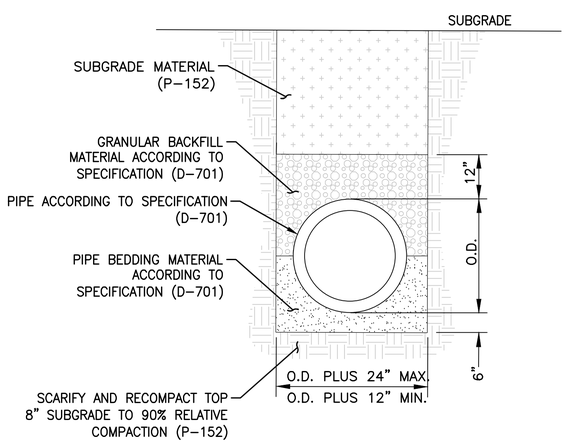

3 / U2.2 TYPICAL PIPE TRENCH

N.T.S.

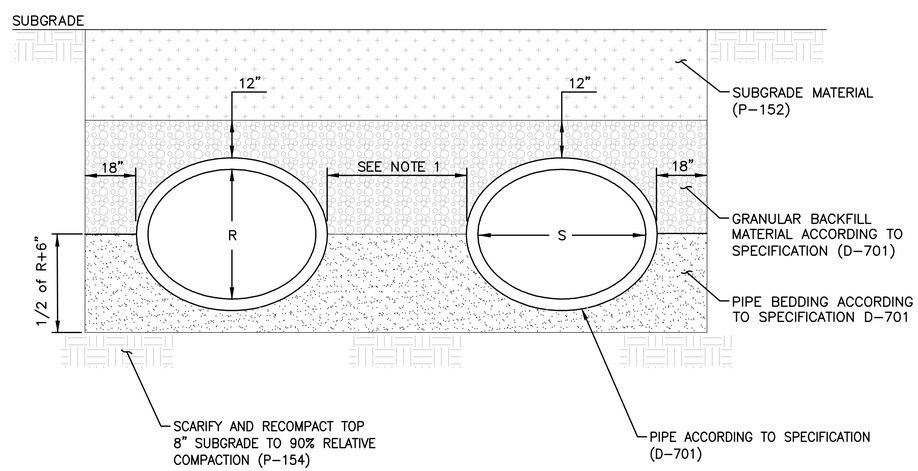

NOTES:

1. SPACING AS NECESSARY TO ACCOMODATE FLARED END SECTIONS BUT NO LESS THAN 30". REFER TO DETAIL 2/U2.4

4 / U2.2 MULTIPLE ELLIPTICAL RCP PIPE TRENCH

N.T.S.

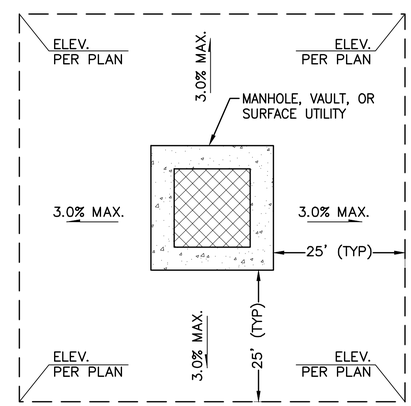

5 / U2.2 ELECTRIC VAULT GRADING TRANSITION DETAIL

N.T.S.

FOR BIDDING PURPOSES ONLY

NO.	DESCRIPTION	DATE

DATE: DECEMBER 11, 2019
SCALE: N/A
DRAWN BY: DAB
DESIGNED BY: MAK, BAM
CHECKED BY: MAC

BRIAN A. MARTINEZMOLES
PROFESSIONAL ENGINEER - STATE OF NEBRASKA
Exp. 12-31-21
CIVIL
No. 21202

WOOD RODGERS
BUILDING RELATIONSHIPS ONE PROJECT AT A TIME
1361 Corporate Blvd
Reno, NV 89502
Tel 775.823.4068
Fax 775.823.4066

Reno-Tahoe International Airport

RUNWAY 16R-34L RECONSTRUCTION

UTILITY DETAILS

PROJECT NO. 8494.002

DRAWING U2.2

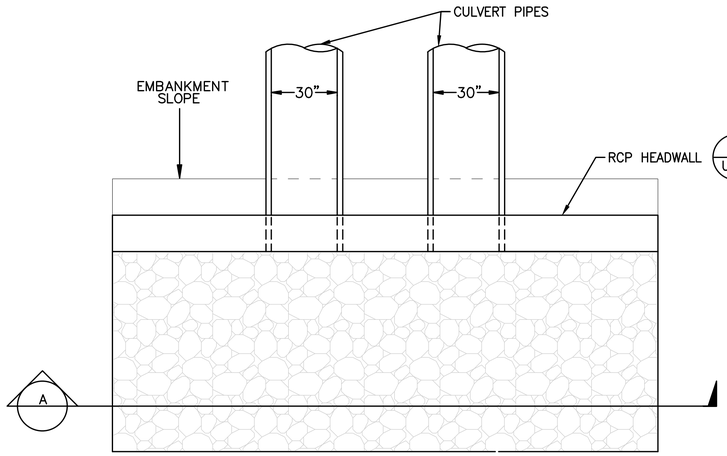

PLAN
N.T.S.

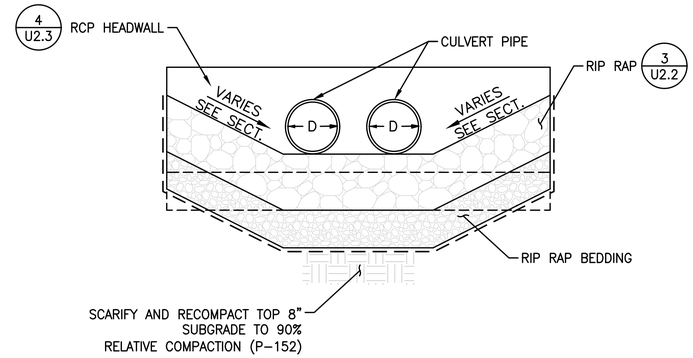

SECTION A
N.T.S.

NOTES:

1. RIP RAP SHALL BE PLACED SUCH THAT THE TOP OF ROCK IS FLUSH WITH THE INVERT ELEVATION OF THE PIPE.
2. TRANSITION END OF RIP RAP APRON TO DOWN STREAM CHANNEL. APRON MAY BE SKEWED AND DIMENSIONS ADJUSTED TO MATCH AND LINE UP WITH DOWN STREAM CHANNEL.

1 / U2.3 HEADWALL RIP RAP APRON
N.T.S.

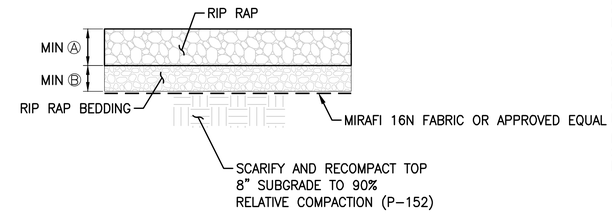

RIP RAP CLASS	Ⓐ	Ⓑ
CLASS 150	12"	8"
CLASS 300	24"	8"
CLASS 450	36"	10"

NOTES

1. STONE SHALL BE PLACED BY HAND WITH CLOSE JOINT FIRMLY BEDDED INTO THE SLOPE AND AGAINST ADJOINING ROCKS.

2 / U2.3 RIP RAP
N.T.S.

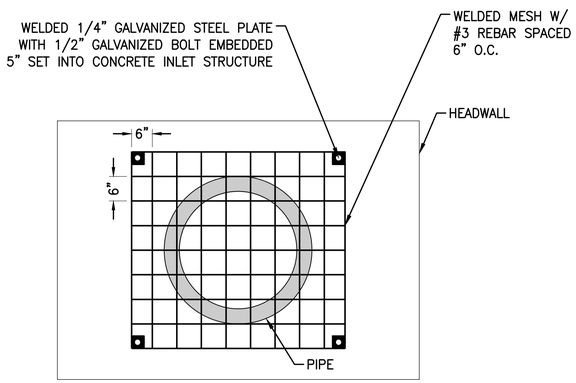

3 / U2.3 ACCESS CONTROL GRATE
N.T.S.

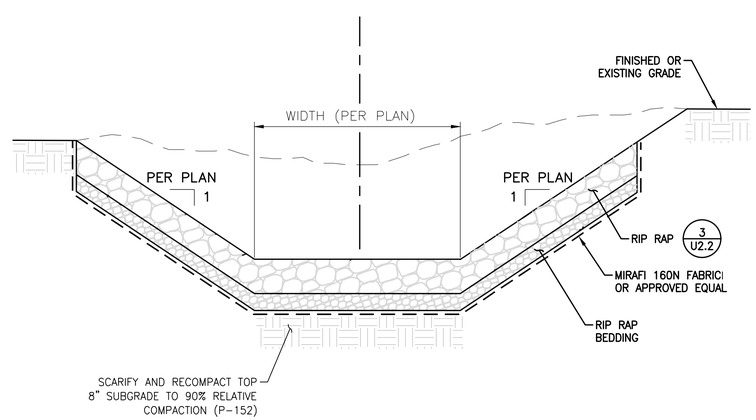

4 / U2.3 RIP RAP DITCH
N.T.S.

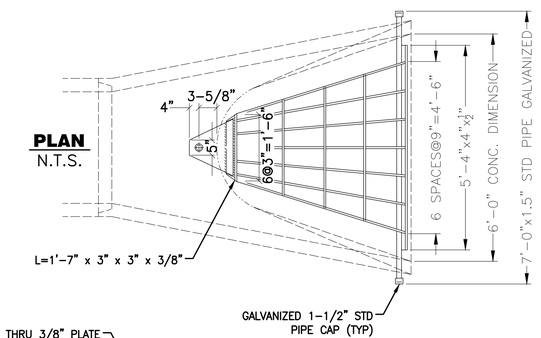

PLAN
N.T.S.

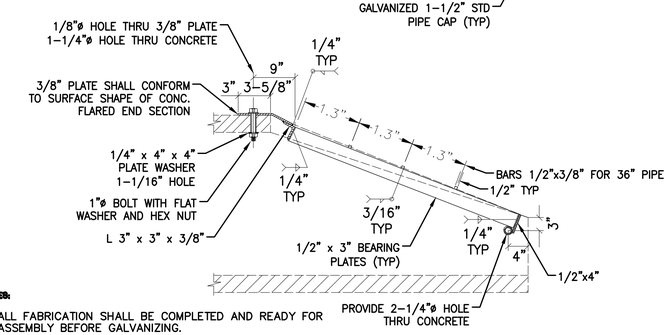

SECTION A
N.T.S.

NOTES:

1. ALL FABRICATION SHALL BE COMPLETED AND READY FOR ASSEMBLY BEFORE GALVANIZING.
2. THE CORED HOLES IN THE PRECAST CONC. FLARED END SECTIONS SHALL BE TO THE DIAMETERS NOTED. IF CONE-OUT ON THE OTHER END OF THE HOLE OCCURS, THE HOLE SHALL BE FILLED WITH GROUT TO CORRECT DIAMETER OF THE HOLE.

5 / U2.3 FLARED END SECTION GRATE
N.T.S.

FOR BIDDING PURPOSES ONLY

NO.	DESCRIPTION	DATE

DATE: DECEMBER 11, 2019
SCALE: N/A
DRAWN BY: DAB
DESIGNED BY: MAK, BAM
CHECKED BY: MAC

PROFESSIONAL ENGINEER - STATE OF NEVADA
BRIAN A. MARTINEZMOLES
Exp. 12-31-21
CIVIL
No. 21202

WOOD RODGERS
BUILDING RELATIONSHIPS ONE PROJECT AT A TIME
1361 Corporate Blvd
Reno, NV 89502
Tel 775.823.4068
Fax 775.823.4066

Reno-Tahoe International Airport

RUNWAY 16R-34L RECONSTRUCTION

UTILITY DETAILS

PROJECT NO. 8494.002

DRAWING U2.3

J:\Jobs\8494_RTIA Runways\RTIA Runway 16R_CA\Civil\Dwg\2-16R-34L_BidPkg2\U0203_16R.dwg 12/9/2019 5:10 PM Trevor Shamblin

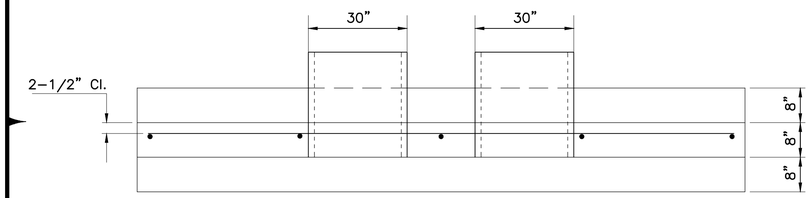

PLAN VIEW
N.T.S.

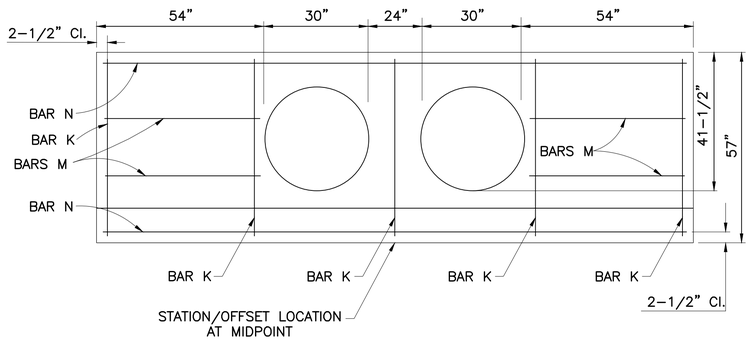

ELEVATION VIEW
N.T.S.

NOTES:

1. CONCRETE SHALL MEET P-610 REQUIREMENTS.
2. REINFORCING STEEL SHALL BE DEFORMED BARS WITH MAXIMUM SPACING OF 18" SET 2 1/2" CLEAR OF SURFACE OF CONCRETE EXCEPT AS NOTED. BAR ENDS SHALL BE KEPT 1 1/2" CLEAR OF SURFACE OF CONCRETE. REINFORCING BARS MAY BE CUT AND BENT IN FIELD.
3. FOOTINGS SHOWN ARE OF MINIMUM DEPTH AND SHALL BE EXTENDED IF SOIL IS UNSUITABLE OR LIABLE TO SCOUR.

QUANTITIES SHOWN BELOW ARE FOR TWO HEADWALLS

RCP SIZE DIA.	RCP AREA SQ.FT.	SINGLE RCP 0° SKEW CONC. CU. YD.	SINGLE RCP 0° SKEW STEEL LB.
30"	4.91	3.08	117

QUANTITIES SHOWN BELOW ARE FOR ONE HEADWALL

SINGLE RCP			
LENGTH OF REINFORCING BARS			
RCP DIA.	0° SKEW M	0° SKEW K	0° SKEW N
	NO. 4	NO. 4	NO. 5
30"	4@4'-0"	9@4'-6"	2@15'-9"

1 / U2.4 RCP HEADWALL
N.T.S.

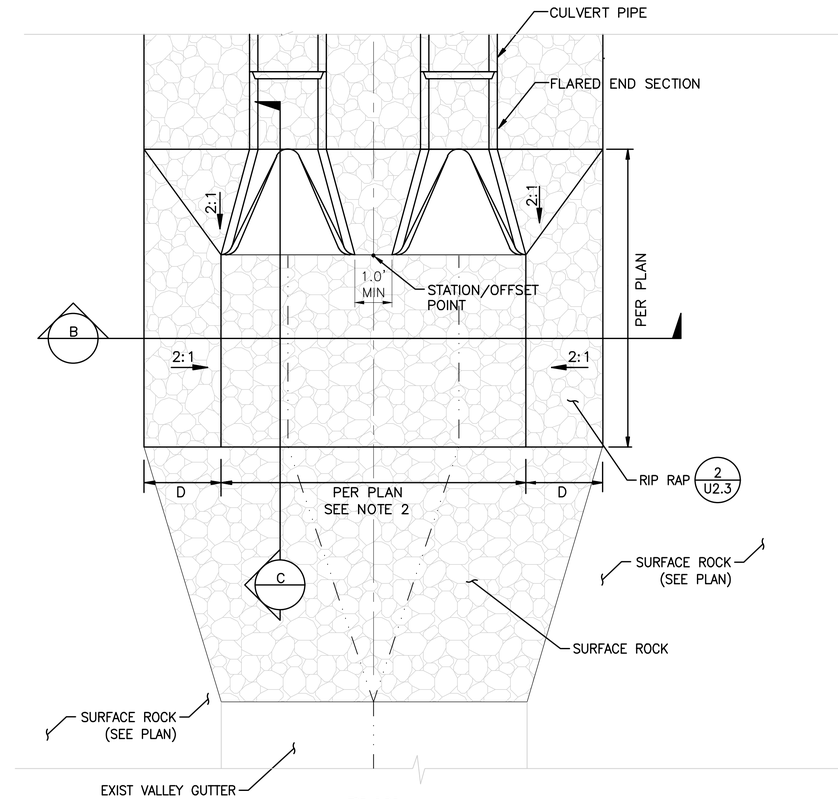

PLAN
N.T.S.

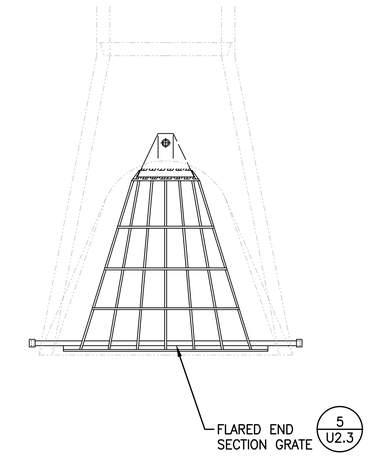

RISE - R (INCHES)	SPAN - S (INCHES)	ROUND EQUIVALENT D - (INCHES)
14	23	18
19	30	24
24	38	30
29	45	36

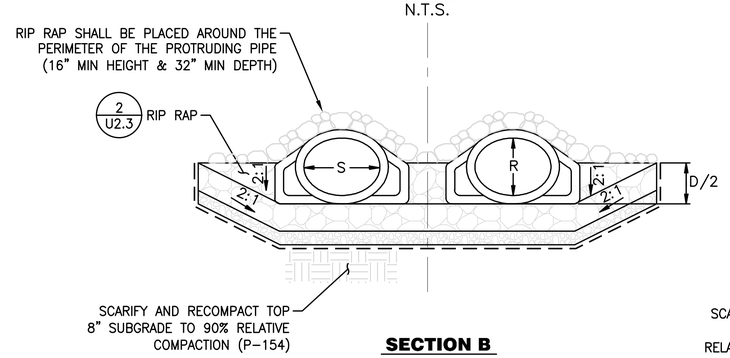

SECTION B
N.T.S.

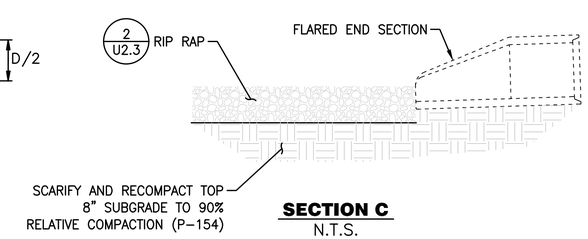

SECTION C
N.T.S.

FLARED END SECTION W/ RIP RAP APRON

NOTES

1. RIP RAP SHALL BE PLACED SUCH THAT THE TOP OF ROCK IS FLUSH WITH THE INVERT ELEVATION OF THE PIPE.
2. TRANSITION END OF RIP RAP APRON TO DOWN STREAM CHANNEL. APRON MAY BE SKEWED AND DIMENSIONS ADJUSTED TO MATCH AND LINE UP WITH DOWN STREAM CHANNEL.

2 / U2.4 RIP RAP APRON
N.T.S.

FOR BIDDING PURPOSES ONLY

NO.	DESCRIPTION	DATE

DATE: DECEMBER 11, 2019
SCALE: N/A
DRAWN BY: DAB
DESIGNED BY: MAK, BAM
CHECKED BY: MAC

PROFESSIONAL ENGINEER - STATE OF NEVADA
BRIAN A. MARTINEZMOLES
Exp. 12-31-21
CIVIL
No. 21202

WOOD RODGERS
BUILDING RELATIONSHIPS ONE PROJECT AT A TIME
1361 Corporate Blvd
Reno, NV 89502
Tel 775.823.4068
Fax 775.823.4066

Reno-Tahoe International Airport

RUNWAY 16R-34L RECONSTRUCTION

UTILITY DETAILS

PROJECT NO. 8494.002

DRAWING U2.4