UTA
UTAH TRANSIT AUTHORITY

TIGER FIRST/LAST MILE PROGRAM

OVERPASS STRUCTURE
SR-92 & DIGITAL DRIVE
PROJECT: LEH_OP_1
LEHI, UTAH

LEHI CITY

SHEET INDEX

DRAWING	SHEET NO.	TITLE
CV	1 OF 1	COVER SHEET
GN-01	1 OF 2	GENERAL NOTES
GN-02	2 OF 2	GENERAL NOTES
CR-01	1 OF 1	CROSS REFERENCE
TS-01	1 OF 2	TYPICAL SECTION
TS-02	2 OF 2	TYPICAL SECTION
DT-01	1 OF 8	COLUMN PROTECTION DETAIL
DT-02	2 OF 8	WALL-A DETAIL
DT-03	3 OF 8	WALL-B DETAIL
DT-04	4 OF 8	WALL-C DETAIL
DT-05	5 OF 8	MSE WALL DETAIL
DT-06	6 OF 8	MURDOCK CANAL REALIGNMENT DETAIL
DT-07	7 OF 8	SWITCHBACK PAD GRADING DETAIL
DT-08	8 OF 8	SIGN DETAIL
MUP-01	1 OF 10	PATH
MUP-01A	2 OF 10	PATH PROFILE
MUP-02	3 OF 10	PATH
MUP-02A	4 OF 10	PATH PROFILE
MUP-02B	5 OF 10	PATH PROFILE
MUP-03	6 OF 10	PATH
MUP-03A	7 OF 10	PATH PROFILE
MUP-04	8 OF 10	PATH
MUP-04A	9 OF 10	PATH PROFILE
MUP-04B	10 OF 10	PATH PROFILE
DRDT-01	1 OF 6	DRAINAGE GENERAL NOTES
DRDT-02	2 OF 6	DRAINAGE STRUCTURE PLACEMENT/CONNECTION DETAIL
DRDT-03	3 OF 6	RIPRAP PLACEMENT DETAIL
DRDT-04	4 OF 6	DETENTION BASIN GRADING DETAIL
DRDT-05	5 OF 6	DITCH DETAILS
DRDT-06	6 OF 6	PAD TIE-IN DETAIL
DR-01	1 OF 7	DRAINAGE
DR-02	2 OF 7	DRAINAGE
DR-02A	3 OF 7	DRAINAGE PROFILE
DR-03	4 OF 7	DRAINAGE
DR-03A	5 OF 7	DRAINAGE PROFILE
DR-04	6 OF 7	DRAINAGE
DR-04A	7 OF 7	DRAINAGE PROFILE

STRUCTURE SHEET INDEX

DRAWING	SHEET NO.	TITLE
BR-01	1 OF 31	SITUATION AND LAYOUT 1 OF 2
BR-02	2 OF 31	SITUATION AND LAYOUT 2 OF 2
BR-03	3 OF 31	FOUNDATION PLAN
BR-04	4 OF 31	DRILLED SHAFT DETAILS
BR-05	5 OF 31	ABUTMENT PLAN AND ELEVATION
BR-06	6 OF 31	ABUTMENT DETAILS
BR-07	7 OF 31	WINGWALL DETAILS
BR-08	8 OF 31	BENT PLAN AND ELEVATION
BR-09	9 OF 31	BENT DETAILS
BR-10	10 OF 31	FRAMING PLAN 1 OF 2
BR-11	11 OF 31	FRAMING PLAN 2 OF 2
BR-12	12 OF 31	UBT74 GIRDER DETAILS 1 OF 2
BR-13	13 OF 31	UBT74 GIRDER DETAILS 2 OF 2
BR-14	14 OF 31	BENT BEARING PAD AND GRAFFITI PLATE DETAILS
BR-15	15 OF 31	INTERMEDIATE DIAPHRAGM DETAILS
BR-16	16 OF 31	DECK PLAN 1 OF 2
BR-17	17 OF 31	DECK PLAN 2 OF 2
BR-18	18 OF 31	DECK SECTION
BR-19	19 OF 31	ABUTMENT DIAPHRAGM DETAILS
BR-20	20 OF 31	ABUTMENT EXPANSION BEARINGS
BR-21	21 OF 31	APPROACH SLAB PLAN
BR-22	22 OF 31	APPROACH SLAB DETAILS
BR-23	23 OF 31	APPROACH SLAB DRAIN DETAILS
BR-24	24 OF 31	BENT DIAPHRAGM DETAILS 1 OF 2
BR-25	25 OF 31	BENT DIAPHRAGM DETAILS 2 OF 2
BR-26	26 OF 31	SCREED ELEVATIONS 1 OF 2
BR-27	27 OF 31	SCREED ELEVATIONS 2 OF 2
BR-28	28 OF 31	FENCING DETAILS
BR-29	29 OF 31	AESTHETIC DETAILS
BR-30	30 OF 31	REINFORCING SCHEDULE 1 OF 2
BR-31	31 OF 31	REINFORCING SCHEDULE 2 OF 2

LICENSED PROFESSIONAL ENGINEER
ANDREW L. KITCHEN
No. 5048557
02/28/20
STATE OF UTAH

THIS SEAL APPLIES TO ALL SHEETS CONTAINING THE INSCRIBED SIGNATURE

PROFESSIONAL ENGINEER
7562349
ALAN FRANK YATES
02/28/20
ELECTRONIC SEAL
STATE OF UTAH

THIS SEAL APPLIES TO ALL SHEETS CONTAINING THE INSCRIBED SIGNATURE

RFC

DATE: FEBRUARY 28 2020

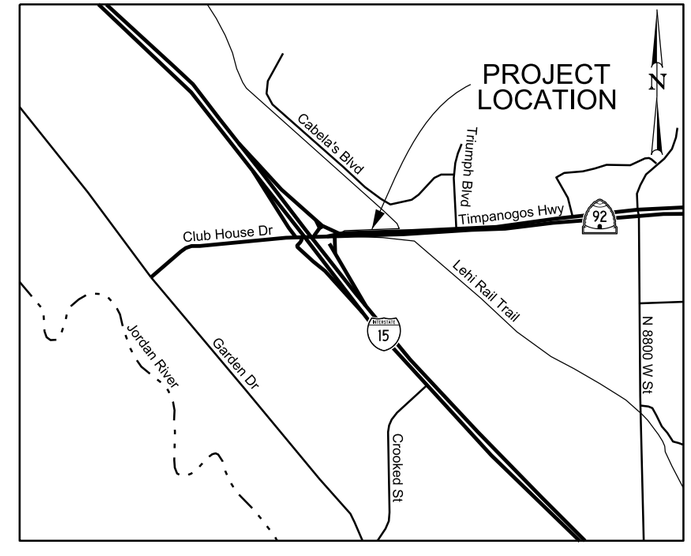

VICINITY MAP (NTS)

REV	DATE	DESCRIPTION

Designed By: MSN
Drawn By: BLP
Checked By: NLB
Approved By: ALK

CivilScience Engineers | Surveyors | Solutions

UTA

COVER SHEET

LEHI CITY
LEH_OP_1
PED OVERPASS STRUCTURE - UDOT STR NO. F-923
SR-92 & DIGITAL DRIVE

CADD Filename: LEH_OP_1-CV.dgn
UTA Contract No.: 18-2399TP
Drawing: CV
Sheet No.: 1 OF 1

DGN File: P:\Proj\8344489\LEH_OP_1-CV.dgn
03-MAR-2020

LINE STYLES

SURFACE FEATURE LINE STYLES

CUT	CUT CATCH LINE
FILL	FILL CATCH LINE
	BUILDING
	FENCE, CHAIN LINK
	Fence, Chain Link Existing
	FENCE, WIRE
	Fence, Wire Existing
	FLOW LINE
	Flow Line Existing
	GUARDRAIL
	Guardrail Existing
	NOISE WALL
	Noise Wall Existing
	RAILROAD
PAVE CUT	PAVEMENT CUTTING
	SEDIMENT BARRIER
	SILT FENCE
	STRAW BALE
	VEGETATION LINE
	CONCRETE BARRIER
	Concrete Barrier Existing
	River Existing

RIGHT OF WAY LINE STYLES

SEC	SECTION LINE
1/4	QUARTER SECTION LINE
40	40 ACRE LINE
PL	PROPERTY LINE
N/A	HWY NO-ACCESS LINE
n/a	Existing No-Access Line
R/W N/A	HWY R/W & NO-ACCESS LINE
r/w n/a	Existing R/W & No-Access Line
L/A	HWY LIMITED-ACCESS LINE
l/a	Existing Limited-Access Line
R/W L/A	HWY R/W & LIMITED-ACCESS LINE
r/w l/a	Existing R/W & Limited-Access Line
RR	RAILROAD R/W LINE
rr	Existing Railroad R/W Line
FRTG R/W	FRONTAGE ROAD R/W
frtg r/w	Existing Frontage Road R/W
R/W	HIGHWAY R/W
r/w	Existing Highway R/W
PE	PERPETUAL EASEMENT
pe	Existing Perpetual Easement
TE	TEMPORARY EASEMENT

SUBSURFACE/OVERHEAD LINE STYLES

BCTV	CABLE BURIED
bctv	Cable Buried Existing
CTV	CABLE OVERHEAD
ctv	Cable Overhead Existing
PC	PIPE CULVERT
BE	ELECTRIC BURIED
be	Electric Buried Existing
E	ELECTRIC OVERHEAD
e	Electric Overhead Existing
FO	FIBER OPTICS
fo	Fiber Optics Existing
G	GAS
g	Gas Existing
SWR	SANITARY SEWER
swr	Sanitary Sewer Existing
SD	STORM DRAIN
sd	Storm Drain Existing
BTEL	TELEPHONE BURIED
btel	Telephone Buried Existing
TEL	TELEPHONE OVERHEAD
tel	Telephone Overhead Existing
WTR	WATER
wtr	Water Existing

SIGNAL LINE STYLES

pwr	Power Source Circuit Existing
PWR	POWER SOURCE CIRCUIT
sig	Signal Circuit Existing
SIG	SIGNAL CIRCUIT
ped	Pedestrian Circuit Existing
PED	PEDESTRIAN CIRCUIT
psh	Push Button Circuit Existing
PSH	PUSH BUTTON CIRCUIT
det	Detection Circuit Existing
DET	DETECTION CIRCUIT
fut	Future Conduit Existing
FUT	FUTURE CONDUIT
ltg	Lighting Circuit Existing
LTG	LIGHTING CIRCUIT
vid	Video Detection Circuit Existing
VID	VIDEO DETECTION CIRCUIT
rad	Radar Detection Circuit Existing
RAD	RADAR DETECTION CIRCUIT
pem	Preemption Circuit Existing
PEM	PREEMPTION CIRCUIT

SYMBOLS

	ATMS CABINET
BM	Bench Mark
	Cable TV Box
	Electrical Transformer
℄	Center Line
	Section Corner Found
	Section Corner Not Found
A	CURB RETURN RADIUS
	Geotech Drill Hole
TH #	SUE Test Hole
	TREE
	Fire Hydrant
	Valve
G	SIGN, GAS
GP	Gate Post
	Guy Wire or Anchor
1	HORIZONTAL CURVE (#)
	HORIZONTAL/VERTICAL P.I.
	HORIZONTAL/VERTICAL CURVE POINT
M	METER
	JUNCTION BOX STREET LIGHT
	JUNCTION BOX
	LIGHT POLE
UP	UTILITY POLE
PS	POWER SOURCE
	MAIL BOX
ME	MANHOLE ELECTRIC
MG	MANHOLE GAS
MT	MANHOLE TELEPHONE
MSD	MANHOLE STORM DRAIN
MSS	MANHOLE SANITARY SEWER
MW	MANHOLE WATER
	MONUMENT
24:E	PARCEL BALLOON
	RIGHT OF WAY MARKER
	SIGN (SINGLE POST)
	SIGN (DOUBLE POST)
	Signal Pole Existing
	Delineator
	Water Well
	UNDERGROUND SERVICE PED

PROJECT SPECIFIC SYMBOLS AND LINE STYLES

	CURB & GUTTER EXISTING
	CURB & GUTTER
	RETENTION BASIN / BERM
	SIDEWALK / MULTI-USE PATH
	EDGE OF SHOULDER
	STORM DRAIN PIPES

NOTE:
THE LINE STYLES AND SYMBOLS CONTAINED HEREIN ARE NOT ALL INCLUSIVE. ANY ADDITIONAL LINE STYLES NOT SHOWN HERE ARE SHOWN ON THEIR RESPECTIVE SHEETS WITHIN A LEGEND.

REV	DATE	DESCRIPTION

Designed By: MSN
Drawn By: DCV
Checked By: NLB
Approved By: ALK

CivilScience Engineers | Surveyors | Solutions

UTA

GENERAL NOTES

LEHI CITY
LEH_OP_1
PED OVERPASS STRUCTURE - UDOT STR NO. F-923
SR-92 & DIGITAL DRIVE

CADD Filename: LEH_OP_1-GN-01.dgn
UTA Contract No.: 18-2399TP
Drawing: GN-01
Sheet No.: 1 OF 2

DGN File:IP_PWPro\02344489\LEH_OP_1-GN-01.dgn
03-MAR-2020

PROJECT NOTES

GENERAL:

1. CONFORM ALL CONSTRUCTION WITHIN PUBLIC RIGHT-OF-WAY TO THE CONTRACT DOCUMENTS AND THE FOLLOWING CONSTRUCTION STANDARDS AND SPECIFICATIONS UNLESS NOTED OTHERWISE, LISTED IN ORDER OF PRIORITY:

   A. UDOT 2017 STANDARD SPECIFICATIONS FOR ROAD AND BRIDGE CONSTRUCTION INCLUDING ALL CURRENT SUPPLEMENTAL SPECIFICATIONS
   B. UDOT 2017 STANDARD DRAWINGS FOR ROAD AND BRIDGE CONSTRUCTION
   C. 2016 LEHI CITY DESIGN STANDARDS AND PUBLIC IMPROVEMENT SPECIFICATIONS
   D. 2017 AMERICAN PUBLIC WORKS ASSOCIATION MANUAL OF STANDARD SPECIFICATIONS
   E. 2017 AMERICAN PUBLIC WORKS ASSOCIATION MANUAL OF STANDARD PLANS

   DEPARTMENT = UTA
   ENGINEER = DULY AUTHORIZED REPRESENTATIVE OF LEHI CITY OR UTA
   OWNER = LEHI CITY
   UTA = UTAH TRANSIT AUTHORITY

2. THE CONTRACTOR SHALL PROVIDE THE ENGINEER AND THE IMPACTED PROPERTY OWNER A GENERAL NOTICE OF ANY IMPENDING CONSTRUCTION RELATED DISRUPTION OF ACCESS A MAXIMUM OF TWO WEEKS AND A MINIMUM OF ONE WEEK PRIOR TO THE ANTICIPATED DISRUPTION.

3. THE CONTRACTOR WILL BE REQUIRED TO OBTAIN A UTAH DEPARTMENT OF ENVIRONMENTAL QUALITY STORM WATER PERMIT PRIOR TO BEGINNING CONSTRUCTION, THE CONTRACTOR SHALL GENERATE AND UTILIZE A STORM WATER POLLUTION PREVENTION PLAN.

4. CONSTRUCTION IS INTENDED TO BE WITHIN UTA, TRAIL, OR ROADWAY RIGHT-OF-WAY OR EASEMENTS. ANY WORK BEYOND THE EXISTING RIGHT-OF-WAY LINES OR FENCES MUST BE COORDINATED WITH AND APPROVED BY THE ENGINEER AND THE PROPERTY OWNER PRIOR TO ANY SUCH CONSTRUCTION.

5. AVOID IMPACTS TO EXISTING UTILITIES WHERE POSSIBLE. WHERE IMPACTS TO UTILITIES ARE EXPECTED OR ENCOUNTERED COORDINATE RELATED CONSTRUCTION ACTIVITIES AND REQUIRED UTILITY MODIFICATIONS WITH UTILITY OWNERS AND THE ENGINEER. THE CONTRACTOR SHALL INFORM AND COORDINATE PLANNED PROJECT CONSTRUCTION WITH ALL UTILITY OWNERS WITHIN PROJECT AREA PRIOR TO CONSTRUCTION.

6. THE LOCATION OF EXISTING UNDERGROUND UTILITIES SHOWN ARE APPROXIMATE. THE CONTRACTOR SHALL VERIFY THE EXACT LOCATION OF EXISTING UTILITIES, WHERE CONFLICTS MAY EXIST, BEFORE COMMENCING WORK. UNDERGROUND LOCATES MAY BE MADE USING THE UTAH BLUE STAKES NUMBER 1-800-662-4111 OR 811.

7. PRIOR TO CONSTRUCTION, THE CONTRACTOR IS REQUIRED TO DOCUMENT, WITH DIGITAL PHOTOGRAPHY, THE EXISTING DRIVEWAYS, WALLS, FENCES, SIDEWALKS LANDSCAPING AND ALL OTHER ELEMENTS LOCATED OUTSIDE OF THE PUBLIC RIGHT-OF-WAY THAT MAY BE DISTURBED BY CONSTRUCTION. THE DOCUMENTATION MUST BE PROVIDED UPON THE REQUEST OF THE ENGINEER.

8. COORDINATE INSTALLATION OF CONSTRUCTION FENCING WITH UTA.

9. APPLY 2 APPLICATIONS OF PAINT FOR ALL STRIPING AND PAVEMENT MARKINGS. VERIFY TIMING OF SECOND COAT WITH THE ENGINEER.

STREET:

1. GENERATE AND IMPLEMENT TRAFFIC CONTROL PLANS WHEN WITHIN THE SR-92 ROW/EASEMENT. TRAFFIC CONTROL AND PERMITTING MUST BE COORDINATED AND APPROVED WITH THE UDOT I-15 TECHNOLOGY CORRIDOR TEAM AND UDOT REGION 3 PERMITS OFFICE PRIOR TO ENTERING THE ROW/EASEMENT.

2. PRIOR TO FINAL ACCEPTANCE OR OPENING NEW PAVEMENT FOR TRAVEL, PAVEMENT SHALL BE SWEPT CLEAN. ENSURE THAT DUST IS CONTROLLED DURING THE SWEEPING OPERATION THROUGH THE USE OF PROPER EQUIPMENT.

3. ANY EXISTING SURVEY MONUMENTS THAT ARE DISTURBED BY CONSTRUCTION ACTIVITIES SHALL BE REPLACED BY A SURVEYOR LICENSED IN THE STATE OF UTAH, AND TO THE SATISFACTION OF THE ENGINEER.

ADA GENERAL NOTES:

1. THE STANDARD CURB RAMP LAYOUT SHALL BE USED WHENEVER POSSIBLE. ANY DEVIATION FROM STANDARD CURB RAMP PLANS SHALL BE APPROVED BY THE ENGINEER ON A CASE BY CASE BASIS.

2. ALL ALTERNATE RAMPS SHALL BE APPROVED BY THE ENGINEER PRIOR TO CONSTRUCTION.

3. SEAL ALL JOINTS ON SIDEWALK AND RAMPS. MAXIMUM WIDTH OF EXPANSION JOINT IS 1/2".

EROSION CONTROL:

1. THE CONTRACTOR IS FULLY RESPONSIBLE FOR INSTALLING AND MONITORING EROSION CONTROL MEASURES TO PREVENT DISCHARGE OF SOIL LADEN RUNOFF. EROSION AND SEDIMENT CONTROL MEASURES SHALL BE IMPLEMENTED THROUGHOUT THE DURATION OF CONSTRUCTION AND AFTER CONSTRUCTION UNTIL SEEDING AND ANY OTHER PERMANENT SURFACE STABILIZATION HAS BEEN ESTABLISHED TO 80% MINIMUM COVERAGE.

2. CONTRACTOR SHALL INSTALL A CONCRETE WASHOUT LOCATION, AND PROVIDE A SIGN TO IDENTIFY THE CONCRETE WASHOUT AREA. CONTRACTOR SHALL CONSTRUCT A PIT TO PREVENT WASHOUT WATER FROM FLOWING TO THE STORM DRAIN COLLECTION SYSTEM. CONTRACTOR MAY USE AN APPROVED CONCRETE WASHOUT CONTAINER IN LIEU OF A WASHOUT PIT.

3. INSTALL DROP-INLET BARRIER OR EQUIVALENT, PER EROSION CONTROL DETAILS, AROUND ALL EXISTING AND NEW STORM DRAIN DROP INLETS AND PIPE CULVERT INLETS WITHIN THE PROJECT CONSTRUCTION LIMITS.

4. INSTALL EROSION CONTROL DITCH CHECK DAMS, PER EROSION CONTROL DETAILS, WITHIN ALL THE DRAINAGE CHANNELS AND DITCHES.

5. INSPECT ALL EROSION CONTROL ELEMENTS WEEKLY OR AFTER ALL STORM EVENTS OF 1/2" OF RAIN OR GREATER AND DOCUMENT IN ACCORDANCE WITH THE REQUIREMENTS OF NOTICE OF INTENT.

6. ALL WASTE AND UNUSED BUILDING MATERIALS SHALL BE PROPERLY DISPOSED OF AND NOT ALLOWED TO BE CARRIED OFF-SITE BY RUN-OFF OR WIND.

7. DISTURBED GROUND OUTSIDE OF THE EVERYDAY CONSTRUCTION AREA, INCLUDING SOIL STOCKPILES LEFT INACTIVE FOR MORE THAN 10 DAYS, SHALL AT A MINIMUM BE TEMPORARILY STABILIZED BY SEEDING/MULCHING OR OTHER METHODS.

8. EROSION CONTROL MEASURES SHALL REMAIN INTACT UNTIL FINAL RESTORATION OF THE SITE IS COMPLETE.

9. EROSION CONTROL DEVICES DESTROYED AS A RESULT OF CONSTRUCTION ACTIVITIES SHALL BE REPAIRED BY THE END OF THE WORK DAY.

10. TEMPORARY EROSION CONTROL MEASURES SHALL BE REMOVED AT THE COMPLETION OF CONSTRUCTION AFTER STABILIZATION AND PERMANENT LANDSCAPING HAS BEEN INSTALLED.

11. CONTRACTOR IS RESPONSIBLE FOR MINIMIZING TRACKING OF SOIL AND DEBRIS ONTO ADJACENT PROPERTIES AND ROADWAYS. ALL OFF SITE SEDIMENT DEPOSITS OCCURRING AS A RESULT OF CONSTRUCTION WORK OR A STORM EVENT SHALL BE CLEANED UP BY THE END OF EACH DAY.

12. CONTRACTOR SHALL DESIGNATE A PERSON RESPONSIBLE FOR MONITORING AND MAINTAINING THE SWPPP, WHICH MUST BE AVAILABLE ONSITE FOR REVIEW BY CITY STAFF. THE SWPPP MUST BE MAINTAINED WITH A MINIMUM WEEKLY RECORD INSPECTION.

13. REFER TO UDOT 2017 STANDARD DRAWINGS FOR ROAD AND BRIDGE CONSTRUCTION AND THIS PLAN SET'S EROSION CONTROL DETAILS.

14. PROVIDE DROP-INLET BARRIERS ON NEW AND EXISTING DOWNSTREAM CURB INLETS AS NOTED ON DR SHEETS.

15. INSTALL STABILIZED CONSTRUCTION ENTRANCE(S) AS DEEMED APPROPRIATE BY THE ENGINEER. INSPECT DAILY FOR LOSS OF GRAVEL OR SEDIMENT BUILDUP. REPAIR ACCESS AND REPLACE GRAVEL AS REQUIRED TO MAINTAIN CONTROL IN GOOD WORKING CONDITION.

ABBREVIATIONS

AGGR	AGGREGATE
APPR.	APPROXIMATELY
AR MH	AIR RELEASE MANHOLE
ARV	AIR RELEASE VALVE
ASSY.	ASSEMBLY
AVE	AVENUE
B.O.	BY OTHERS
BOA	BEGINNING OF ALIGNMENT
BOP	BEGINNING OF PROJECT
BVC	BEGIN VERTICAL CURVE
CB	CATCH BASIN
TCE	TEMPORARY CONSTRUCTION EASEMENT LINE
CF	CUBIC FEET
CL	CENTERLINE
CMP	CORRUGATED METAL PIPE
CU	COPPER
CY/CU YD	CUBIC YARD
DIA	DIAMETER
DR	DRIVE
DRWY	DRIVEWAY
E.	EAST
EA	EACH
EOA	END OF ALIGNMENT
EOP	EDGE OF PAVEMENT
EVC	END VERTICAL CURVE
ex	EXISTING
ES	FLARED END SECTION
FL	FLOWLINE
FO	FIBER OPTIC
HDPE	HIGH-DENSITY POLYETHYLENE
HOR	HORIZONTAL
IN	INCH
I.D.	INSIDE DIAMETER
INV	INVERT
IRR	IRRIGATION
LB	POUND
MAX	MAXIMUM
MH	MANHOLE
MIN	MINIMUM
NO.	NUMBER
NTS	NOT TO SCALE
O.C.	ON CENTER
O.D.	OUTSIDE DIAMETER
PC	POINT OF CURVATURE
PCC	POINT OF COMPOUND CURVATURE
PI	POINT OF INTERSECTION
PL	PROPERTY LINE
POLY	POLYETHYLENE
PP	POWER POLE
PRC	POINT OF REVERSE CURVATURE
PSI	POUNDS PER SQUARE INCH
PT	POINT OF TANGENCY
PVC	POLYVINYL CHLORIDE
PVI	POINT OF VERTICAL INTERSECTION
RAD	RADIUS
RCP	REINFORCED CONCRETE PIPE
REQ'D	REQUIRED
ROW	RIGHT-OF-WAY
RR	RAILROAD
SD	STORM DRAIN
SF/SQ FT	SQUARE FEET
SLRP	SMOOTH, LEAK RESISTANT PIPE
SWR	SANITARY SEWER
ST	STREET
STA	STATION
STD	STANDARD
SY/SQ YD	SQUARE YARD
TBC	TOP BACK OF CURB
TBR	TO BE REMOVED
TYP.	TYPICAL
VAR.	VARIES
WAT	WATER

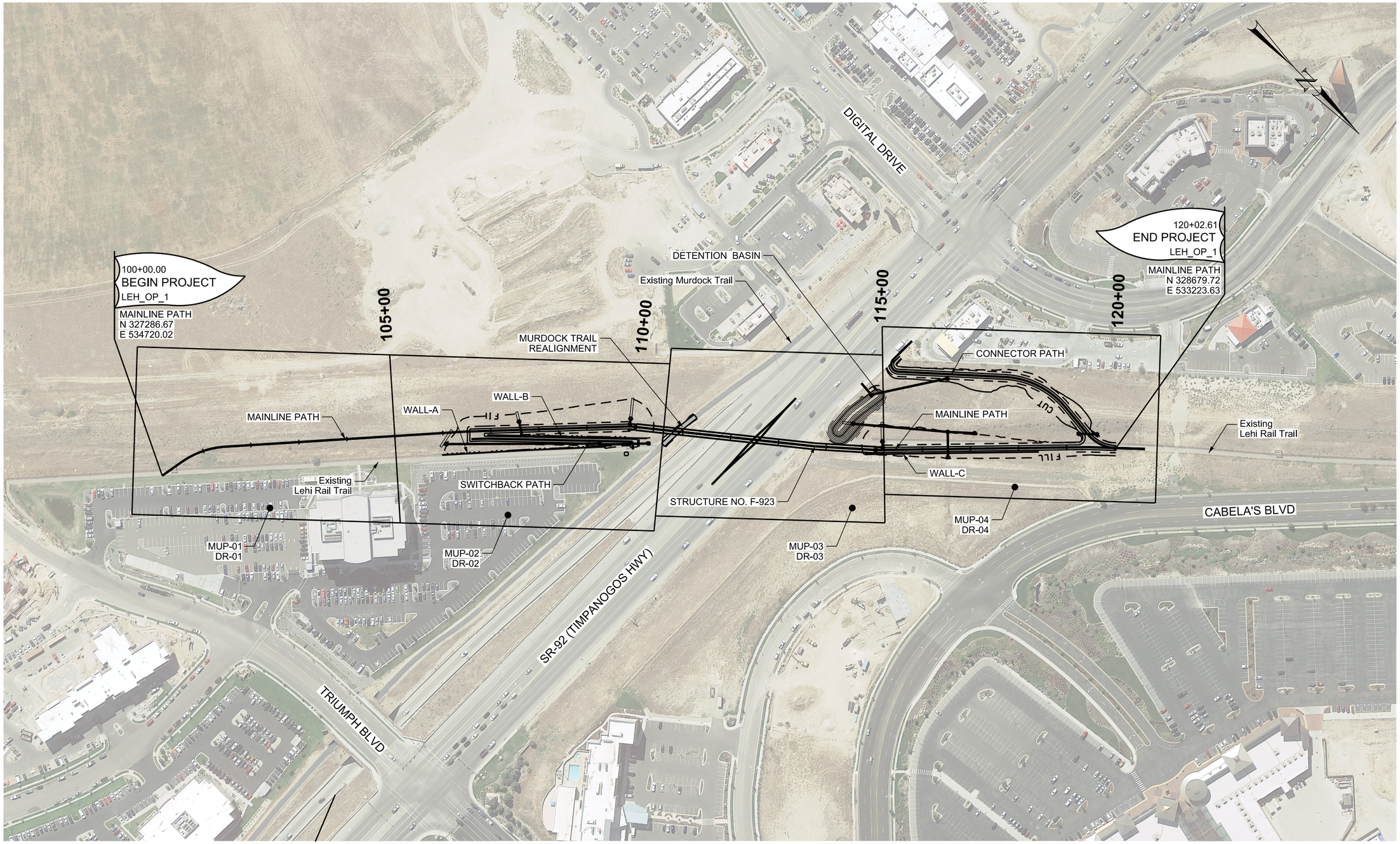

REV	DATE	DESCRIPTION

Designed By: MSN
Drawn By: DCV
Checked By: NLB
Approved By: ALK

CivilScience Engineers | Surveyors | Solutions

UTA

CROSS REFERENCE

LEHI CITY
LEH_OP_1
PED OVERPASS STRUCTURE - UDOT STR NO. F-923
SR-92 & DIGITAL DRIVE

CADD Filename: LEH_OP_1-CR-01.dgn
UTA Contract No.: 18-2399TP
Drawing: CR-01
Sheet No.: 1 OF 1

DGN File:IP-PWPw0344489\LEH_OP_1-CR-01.dgn
03-MAR-2020

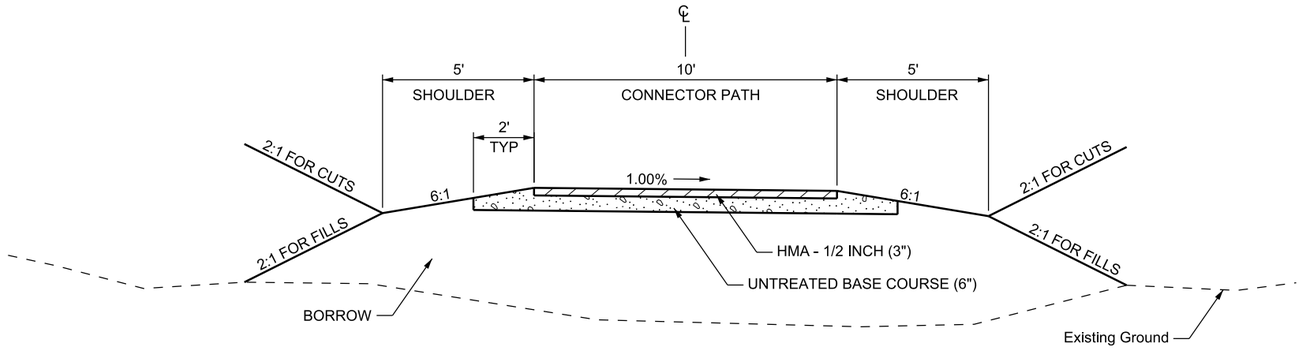

TYPICAL SECTION 1

CONNECTOR PATH

300+64.55 TO 305+21.52

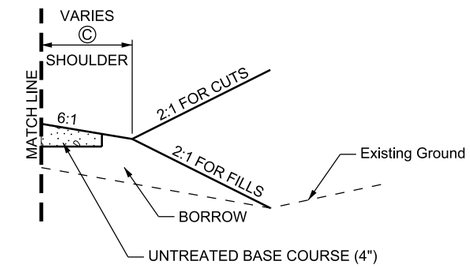

SIDE TREATMENT A

SWITCHBACK PATH

202+79.97 TO 203+46.85

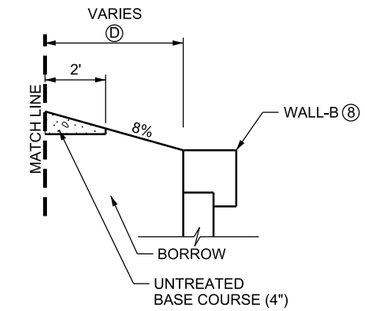

SIDE TREATMENT B

MAINLINE PATH

106+92.94 TO 107+62.59

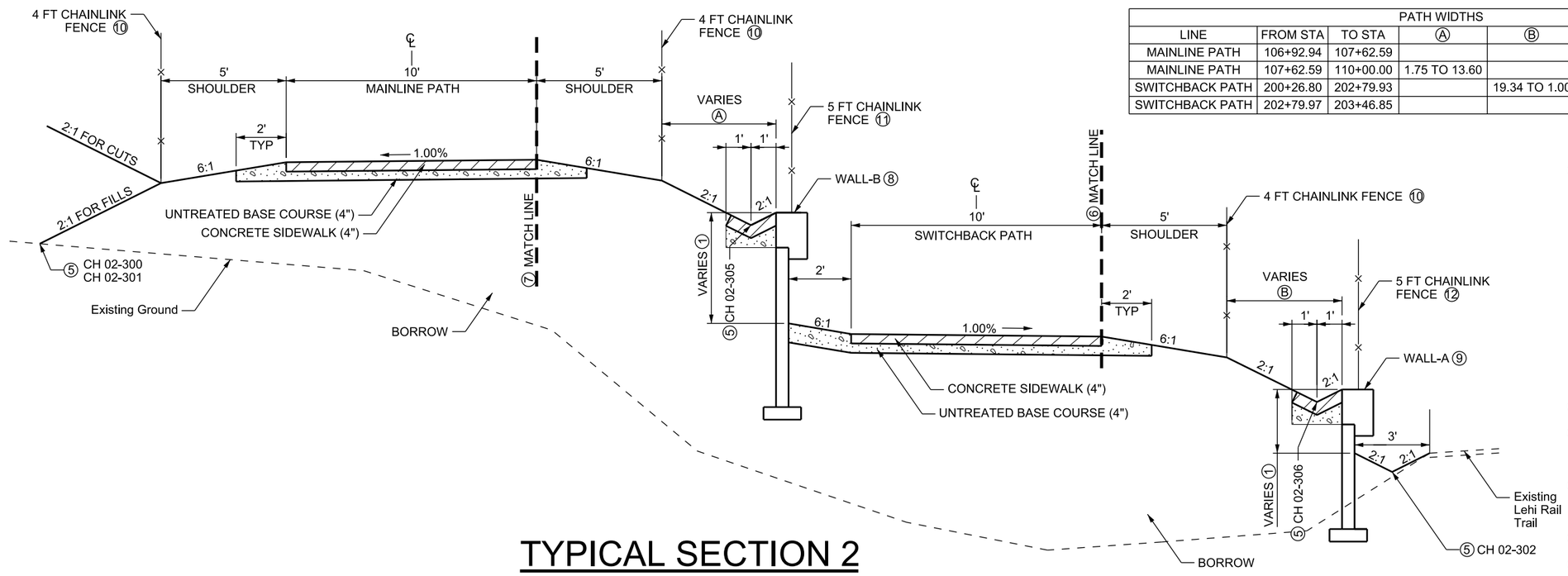

TYPICAL SECTION 2

MAINLINE PATH

106+92.94 TO 110+00.00

SWITCHBACK PATH

200+26.80 TO 203+46.85

PATH WIDTHS						
LINE	FROM STA	TO STA	Ⓐ	Ⓑ	Ⓒ	Ⓓ
MAINLINE PATH	106+92.94	107+62.59				3.10 TO 6.75
MAINLINE PATH	107+62.59	110+00.00	1.75 TO 13.60			
SWITCHBACK PATH	200+26.80	202+79.93		19.34 TO 1.00		
SWITCHBACK PATH	202+79.97	203+46.85			5.00 TO 3.00	

NOTES:

① SEE WALL DETAILS FOR WALL HEIGHTS.

2. STRIP, STOCKPILE, AND SPREAD TOPSOIL.

   STRIP AT A 4-INCH MINIMUM THICKNESS, TOPSOIL FROM EDGE CATCH POINT TO EDGE CATCH POINT.

   SPREAD TOPSOIL AT A 4-INCH MINIMUM THICKNESS ON ALL DISTURBED SLOPES UP TO THE UNTREATED BASE COURSE.

3. DRILL SEED ON ALL DISTURBED SLOPES 3:1 AND FLATTER, BROADCAST SEED ON ALL SLOPES STEEPER THAN 3:1.

4. HECP TYPE 1 ON ALL SLOPES 2:1 AND FLATTER.

⑤ SEE DRDT-05 FOR DITCH DETAILS.

⑥ REFER TO SIDE TREATMENT A ON THIS SHEET FOR LOCATIONS WHERE SIDE TREATMENTS DIFFER FROM THIS LOCATION.

⑦ REFER TO SIDE TREATMENT B ON THIS SHEET FOR LOCATIONS WHERE SIDE TREATMENTS DIFFER FROM THIS LOCATION.

⑧ SEE DT-03 AND DT-05 FOR WALL-B DETAILS.

⑨ SEE DT-02 AND DT-05 FOR WALL-A DETAILS.

⑩ SEE MUP-02 FOR FENCE LOCATION.

⑪ SEE MUP-02, DT-03 AND DT-05 FOR WALL-B FENCE LOCATION AND DETAILS.

⑫ SEE MUP-02, DT-02 AND DT-05 FOR WALL-B FENCE LOCATION AND DETAILS.

REV	DATE	DESCRIPTION

Designed By: MSN
Drawn By: DCV
Checked By: NLB
Approved By: ALK

CivilScience Engineers | Surveyors | Solutions

UTA

TYPICAL SECTION

LEHI CITY
LEH_OP_1
PED OVERPASS STRUCTURE - UDOT STR NO. F-923
SR-92 & DIGITAL DRIVE

CADD Filename: LEH_OP_1-TS-01.dgn
UTA Contract No.: 18-2399TP
Drawing: TS-01
Sheet No.: 1 OF 2

DGN File: IP_PWPod0344489\LEH_OP_1-TS-01.dgn
03-MAR-2020

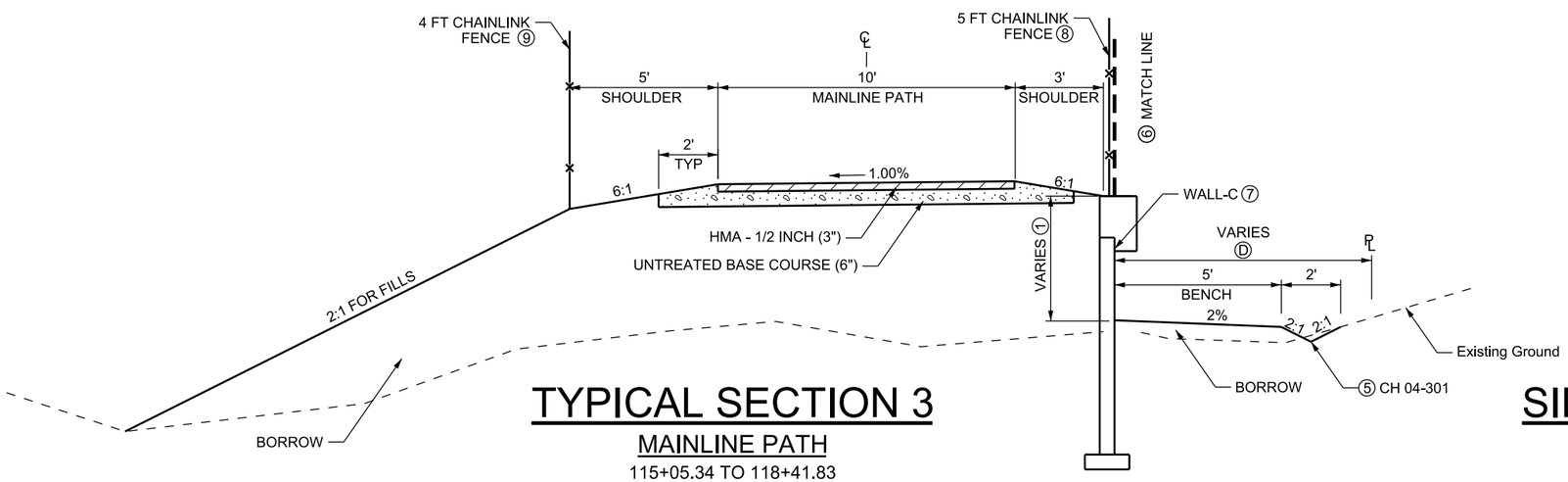

TYPICAL SECTION 3

MAINLINE PATH

115+05.34 TO 118+41.83

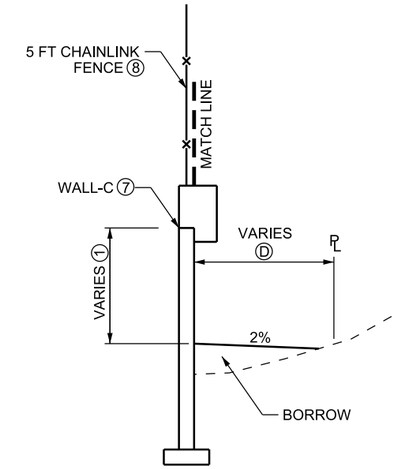

SIDE TREATMENT C

MAINLINE PATH

115+05.34 TO 116+50.99

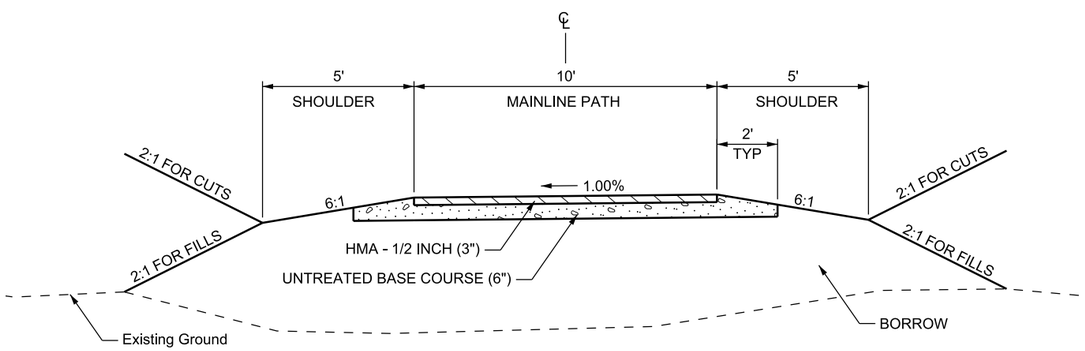

TYPICAL SECTION 4

MAINLINE PATH

118+41.83 TO 120+02.61

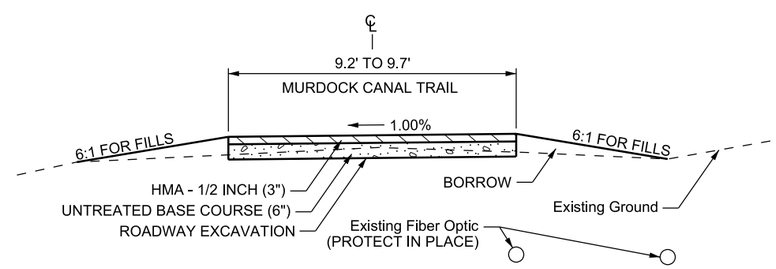

TYPICAL SECTION 5

MURDOCK CANAL TRAIL

700+10.00 TO 700+99.85

PATH WIDTHS			
LINE	FROM STA	TO STA	Ⓓ
MAINLINE PATH	115+05.34	116+50.99	6.00 TO 15.00
MAINLINE PATH	116+50.99	118+41.83	15.00 TO 27.62

NOTES:

① SEE WALL DETAILS FOR WALL HEIGHTS.

2. STRIP, STOCKPILE, AND SPREAD TOPSOIL.

   STRIP AT A 4-INCH MINIMUM THICKNESS, TOPSOIL FROM EDGE CATCH POINT TO EDGE CATCH POINT.

   SPREAD TOPSOIL AT A 4-INCH MINIMUM THICKNESS ON ALL DISTURBED SLOPES UP TO THE UNTREATED BASE COURSE.

3. DRILL SEED ON ALL DISTURBED SLOPES 3:1 AND FLATTER, BROADCAST SEED ON ALL SLOPES STEEPER THAN 3:1.

4. HECP TYPE 1 ON ALL SLOPES 2:1 AND FLATTER.

⑤ SEE DRDT-05 FOR DITCH DETAILS.

⑥ REFER TO SIDE TREATMENT C ON THIS SHEET FOR LOCATIONS WHERE SIDE TREATMENTS DIFFER FROM THIS LOCATION.

⑦ SEE DT-04 AND DT-05 FOR WALL-C DETAILS.

⑧ SEE MUP-03, MUP-04, DT-04 AND DT-05 FOR FENCE LOCATION AND DETAILS.

⑨ SEE MUP-03 AND MUP-04 FOR FENCE LOCATION.

REV	DATE	DESCRIPTION

Designed By: MSN
Drawn By: DCV
Checked By: NLB
Approved By: ALK

CivilScience Engineers | Surveyors | Solutions

UTA

TYPICAL SECTION

LEHI CITY
LEH_OP_1
PED OVERPASS STRUCTURE - UDOT STR NO. F-923
SR-92 & DIGITAL DRIVE

CADD Filename: LEH_OP_1-TS-02.dgn
UTA Contract No.: 18-2399TP
Drawing: TS-02
Sheet No.: 2 OF 2

DGN File: P:\Proj\0344489\LEH_OP_1-TS-02.dgn
03-MAR-2020

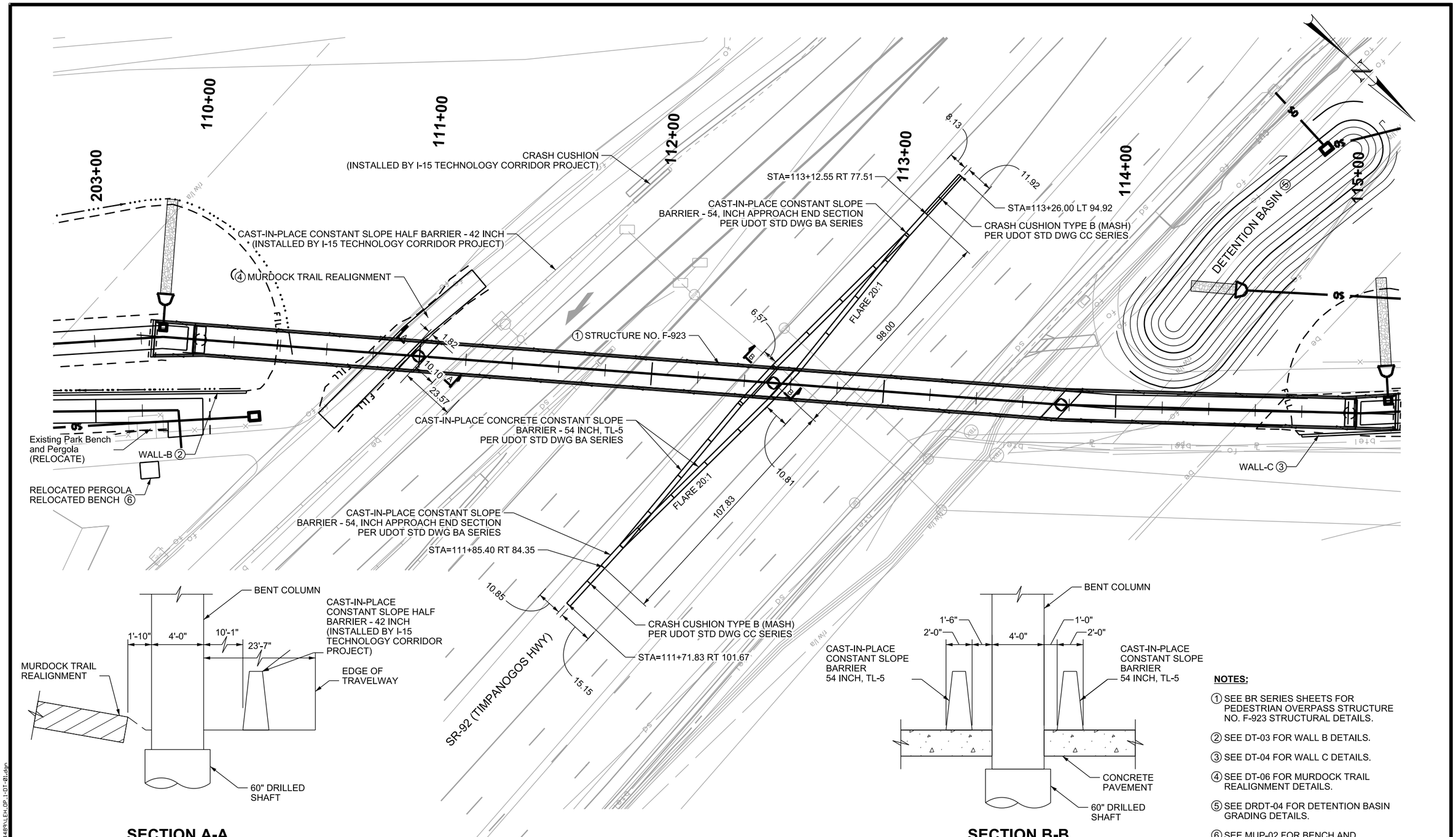

NOTES:

① SEE BR SERIES SHEETS FOR PEDESTRIAN OVERPASS STRUCTURE NO. F-923 STRUCTURAL DETAILS.

② SEE DT-03 FOR WALL B DETAILS.

③ SEE DT-04 FOR WALL C DETAILS.

④ SEE DT-06 FOR MURDOCK TRAIL REALIGNMENT DETAILS.

⑤ SEE DRDT-04 FOR DETENTION BASIN GRADING DETAILS.

⑥ SEE MUP-02 FOR BENCH AND PERGOLA RELOCATION DETAILS.

REV	DATE	DESCRIPTION

Designed By: MSN
Drawn By: DCV
Checked By: NLB
Approved By: ALK

CivilScience Engineers | Surveyors | Solutions

UTA

COLUMN PROTECTION DETAIL

LEHI CITY
LEH_OP_1
PED OVERPASS STRUCTURE - UDOT STR NO. F-923
SR-92 & DIGITAL DRIVE

CADD Filename: LEH_OP_1-DT-01.dgn
UTA Contract No.: 18-2399TP
Drawing: DT-01
Sheet No.: 1 OF 8

DGN File: IP_PWPrd@344489\LEH_OP_1-DT-01.dgn
03-MAR-2020

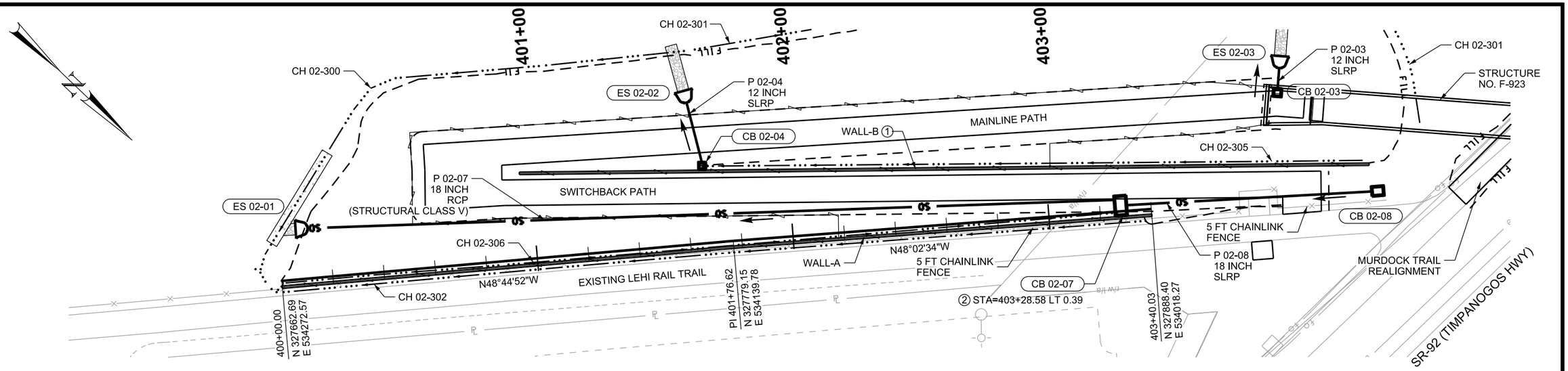

WALL-A PLAN

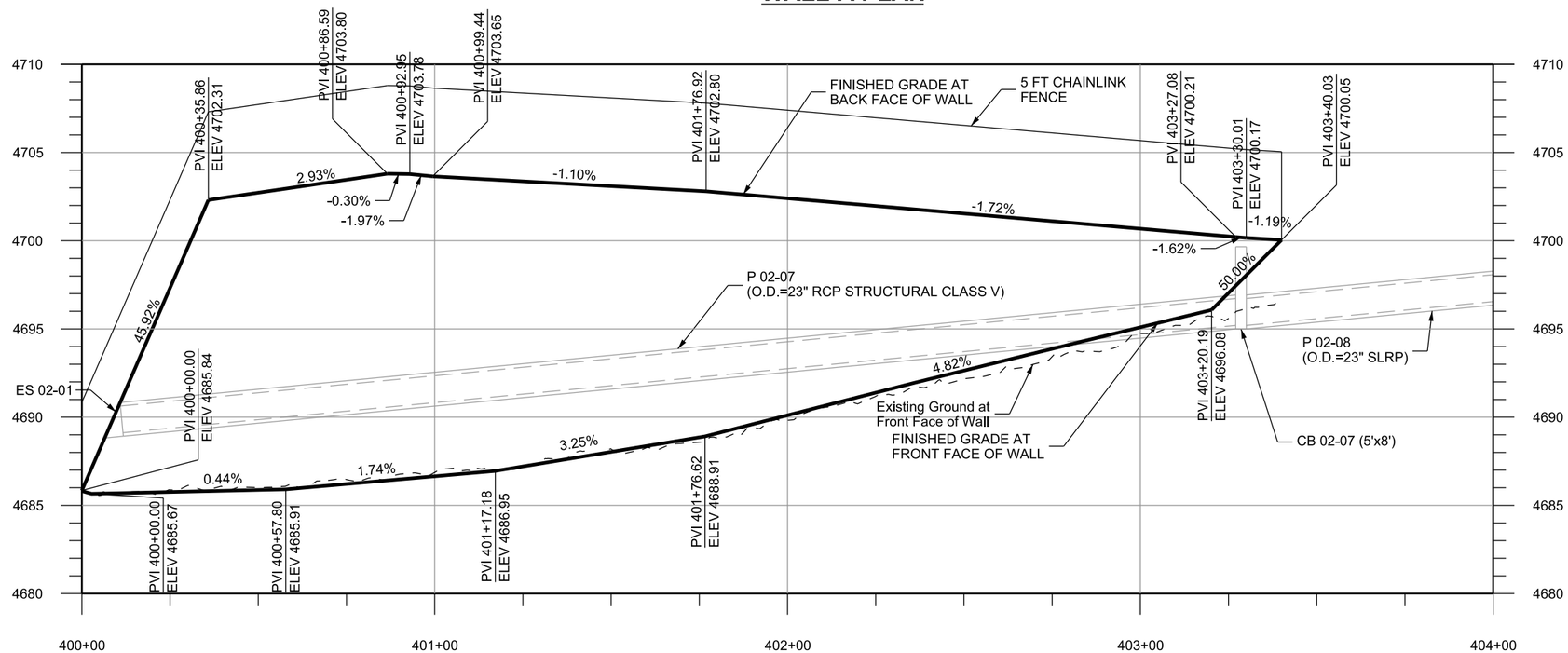

WALL-A PROFILE

NOTES:

1. SEE DT-03 FOR WALL-B DETAILS.
2. STATIONS AND OFFSETS OF CATCH BASINS ARE CALLED OUT TO CENTER OF BOX.
3. SEE DT-05 FOR MSE WALL DETAILS.

REV	DATE	DESCRIPTION

Designed By: MSN
Drawn By: DCV
Checked By: NLB
Approved By: ALK

CivilScience Engineers | Surveyors | Solutions

UTA

WALL-A DETAIL

LEHI CITY
LEH_OP_1
PED OVERPASS STRUCTURE - UDOT STR NO. F-923
SR-92 & DIGITAL DRIVE

CADD Filename: LEH_OP_1-DT-02.dgn
UTA Contract No.: 18-2399TP
Drawing: DT-02
Sheet No.: 2 OF 8

DGN File: P:\Proj\0344489\LEH_OP_1-DT-02.dgn
03-MAR-2020

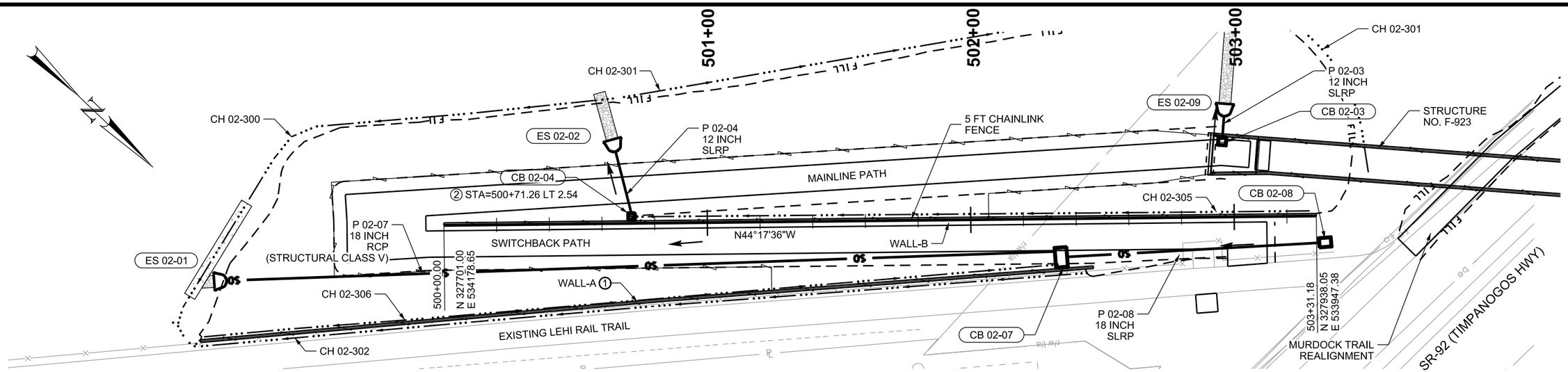

WALL-B PLAN

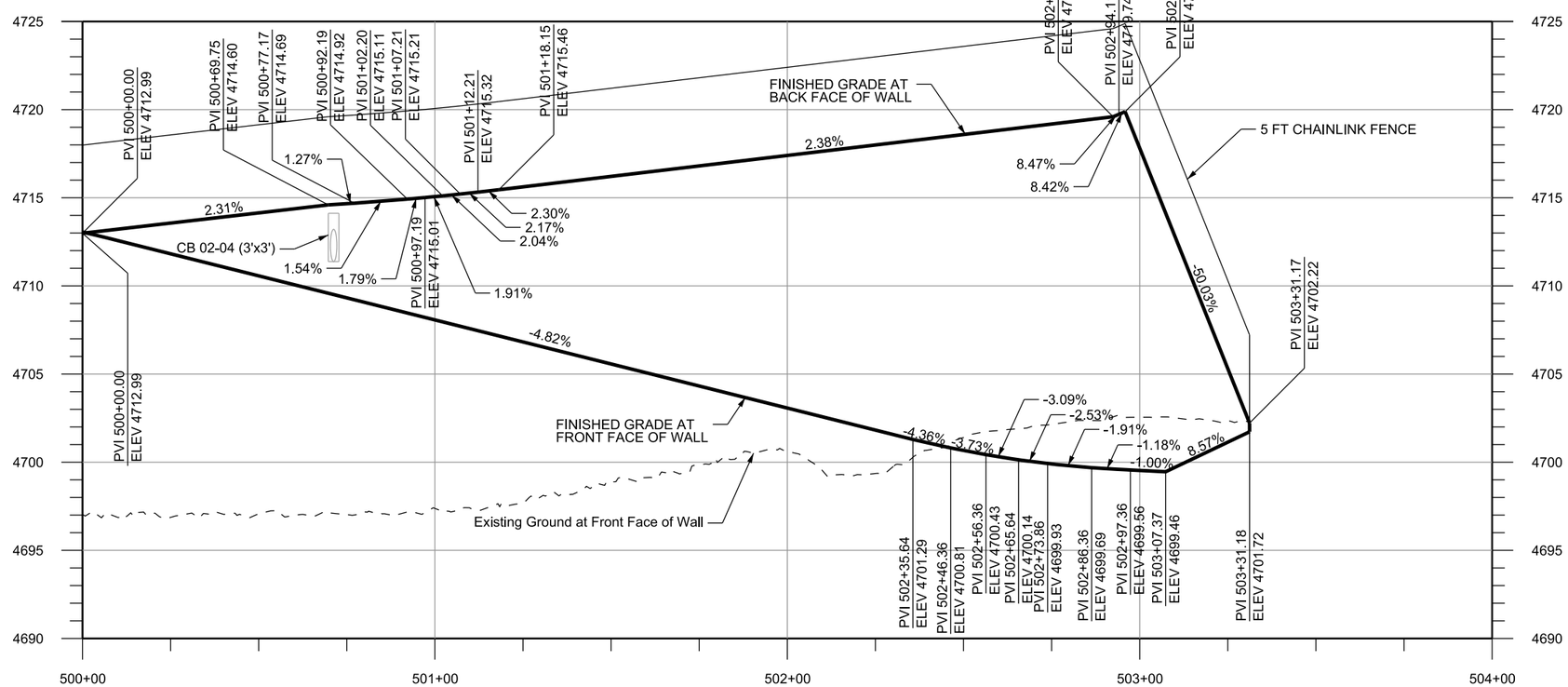

WALL-B PROFILE

NOTES:

① SEE DT-02 FOR WALL-A DETAILS.

② STATIONS AND OFFSETS OF CATCH BASINS ARE CALLED OUT TO CENTER OF BOX.

3. SEE DT-05 FOR MSE WALL DETAILS.

REV	DATE	DESCRIPTION

Designed By: MSN
Drawn By: DCV
Checked By: NLB
Approved By: ALK

CivilScience Engineers | Surveyors | Solutions

UTA

WALL-B DETAIL

LEHI CITY
LEH_OP_1
PED OVERPASS STRUCTURE - UDOT STR NO. F-923
SR-92 & DIGITAL DRIVE

CADD Filename: LEH_OP_1-DT-03.dgn
UTA Contract No.: 18-2399TP
Drawing: DT-03
Sheet No.: 3 OF 8

DGN File: IP PWP:d0344489\LEH_OP_1-DT-03.dgn
03-MAR-2020

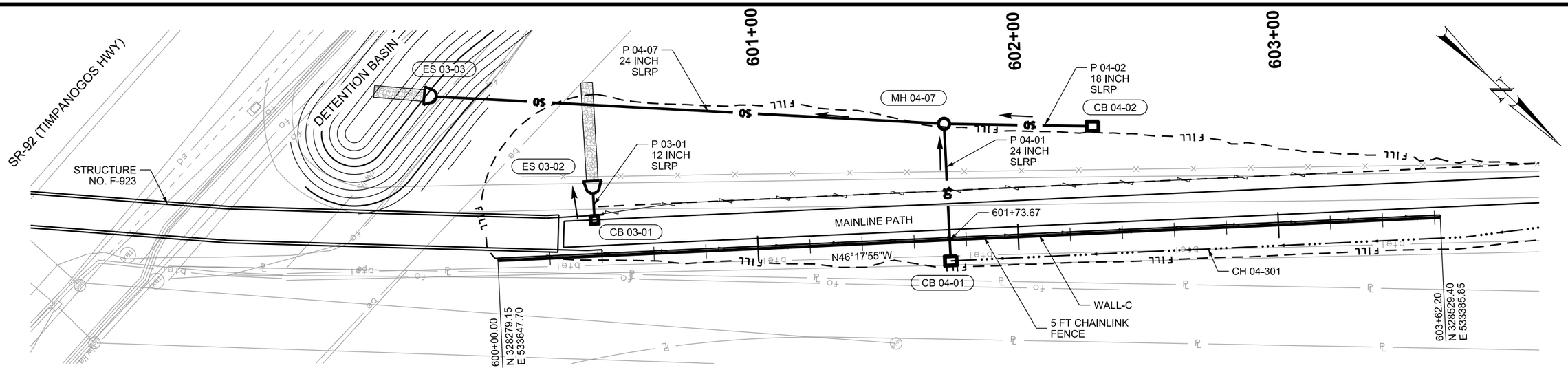

WALL-C PLAN

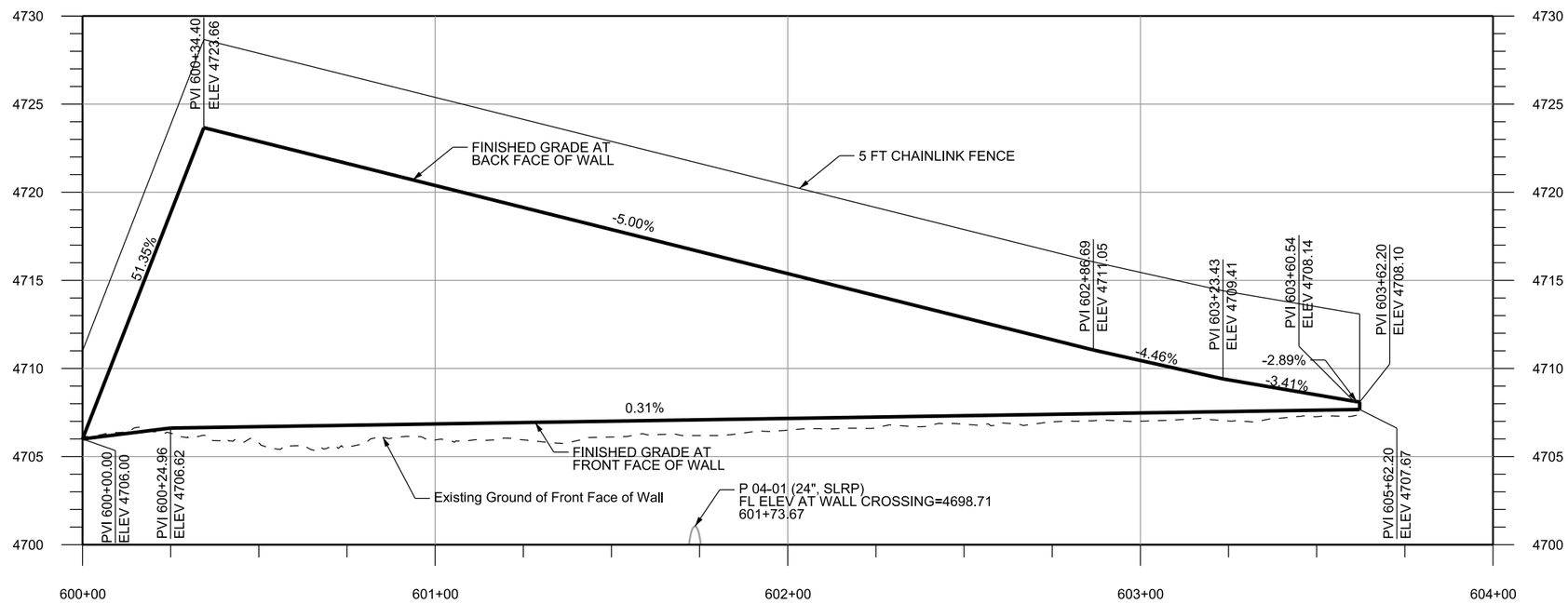

WALL-C PROFILE

NOTES:

1. SEE DT-05 FOR MSE WALL DETAILS.

REV	DATE	DESCRIPTION

Designed By: MSN
Drawn By: DCV
Checked By: NLB
Approved By: ALK

CivilScience Engineers | Surveyors | Solutions

UTA

WALL-C DETAIL

LEHI CITY
LEH_OP_1
PED OVERPASS STRUCTURE - UDOT STR NO. F-923
SR-92 & DIGITAL DRIVE

CADD Filename: LEH_OP_1-DT-04.dgn
UTA Contract No.: 18-2399TP
Drawing: DT-04
Sheet No.: 4 OF 8

DGN File: IP_PWPub@344489\LEH_OP_1-DT-04.dgn
03-MAR-2020

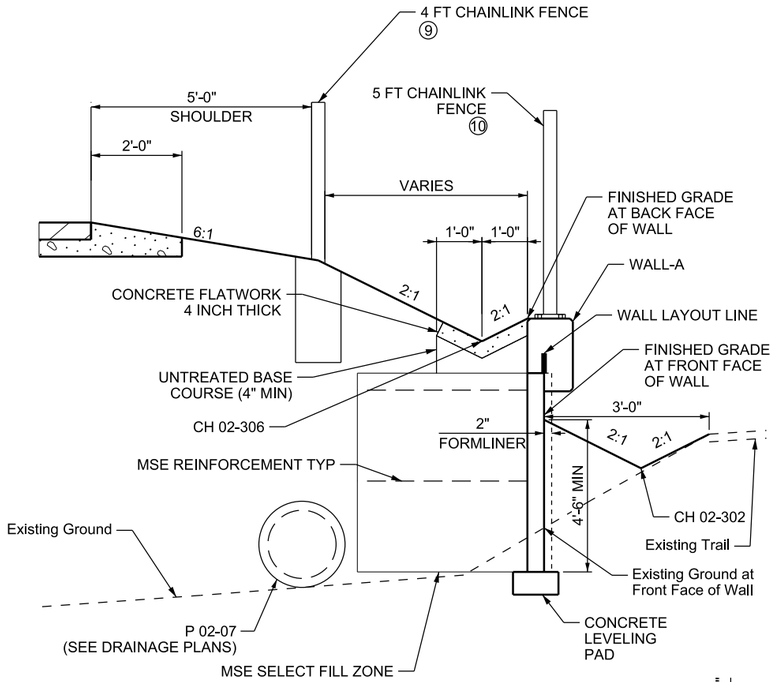

WALL-A SECTION

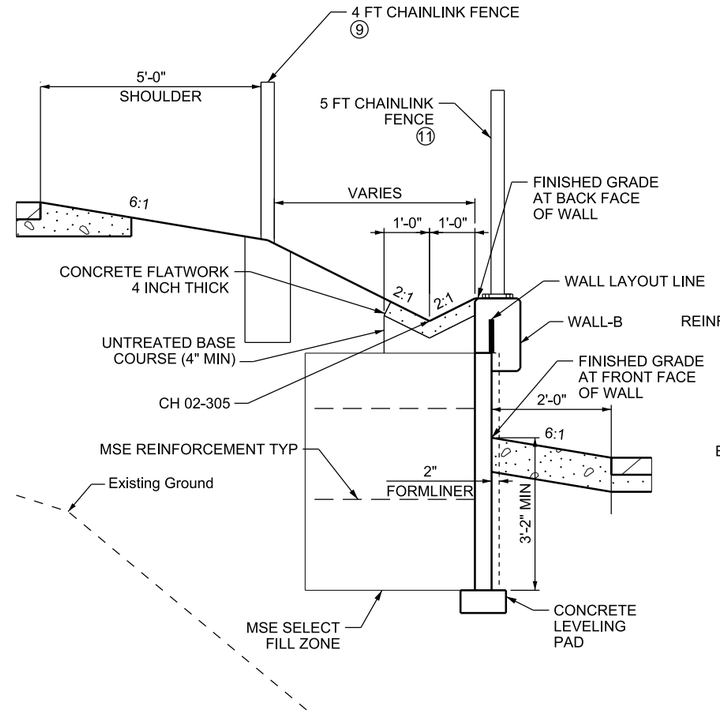

WALL-B SECTION

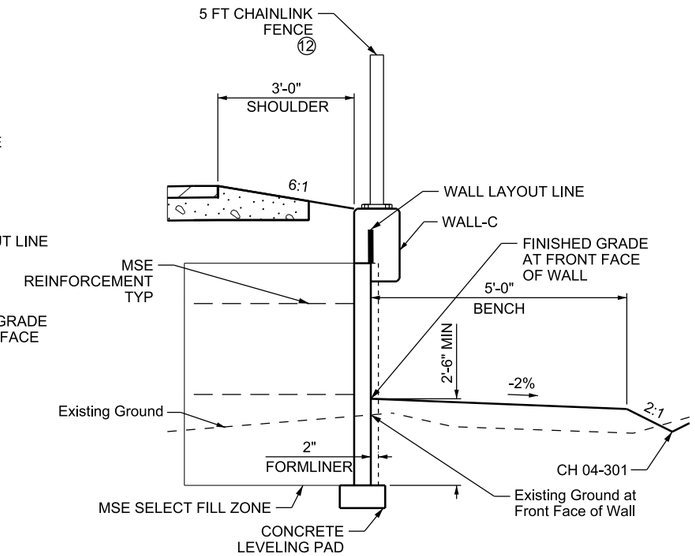

WALL-C SECTION

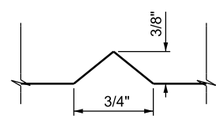

DRIP GROOVE DETAIL

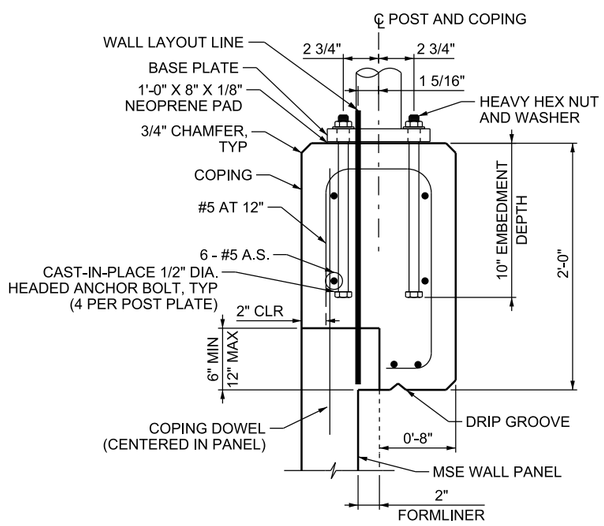

COPING AND FENCE ANCHORAGE DETAIL

SEE NOTE 1, CAST-IN-PLACE OPTION SHOWN

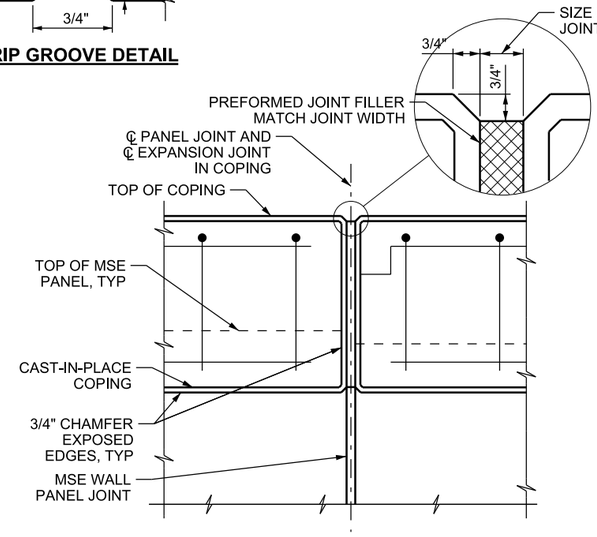

EXPANSION JOINT

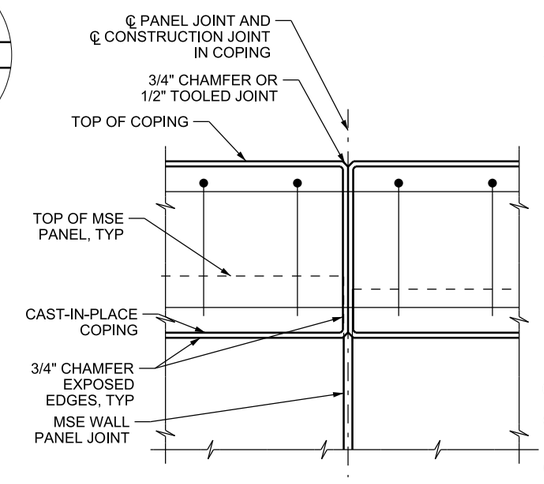

CONSTRUCTION JOINT

COPING JOINT DETAIL

NOTES:

1. REFER TO BR-28 FOR FENCE BASE PLATE AND ANCHORAGE DETAILS. THE POST-INSTALLED OPTION MAY BE USED.
2. LEVELING PAD EMBEDMENT DEPTH MAY INCREASE PER WALL FABRICATOR'S DETAILS AND SPECIFICATIONS.
3. REFER TO BR-29 FOR AESTHETIC DETAILS.
4. DESIGN OF THE FENCE ANCHORAGE AND COPING DOWELS ARE THE RESPONSIBILITY OF THE CONTRACTOR AND WALL FABRICATOR. REFER TO THE APPROVED WALL FABRICATOR'S DETAILS AND SPECIFICATIONS.
5. PLACE A 1 FT WIDE FILTER CLOTH BEHIND JOINT TO PREVENT SOIL PENETRATION THROUGH JOINT WHERE EARTH FILL IS ADJACENT OT EXPANSION JOINT. SEE WALL COMPANY'S RETAINING WALL FOR ADDITIONAL INFORMATION.
6. SLOPE TOP OF COPING SMOOTHLY ACROSS JOINTS. DO NOT STEP COPING AT JOINTS.
7. PLACE EXPANSION JOINTS AT PANEL JOINTS AT 100 FT MAX SPACING AND WHERE WALL DIRECTION CHANGES. PLACE CONSTRUCTION JOINTS AT ALL OTHER PANEL JOINTS.
8. PROVIDE CONTINUOUS LONGITUDINAL REINFORCING BETWEEN EXPANSION JOINTS. PROVIDE 2 FT LAP SPLICES WHERE REQUIRED. STAGGER LAP SPLICES MINIMUM OF 4 FT.

9 SEE MUP-02 FOR FENCE LOCATIONS.

10 SEE MUP-02, DT-02, AND THIS SHEET FOR FENCE LOCATION AND DETAILS.

11 SEE MUP-02, DT-03, AND THIS SHEET FOR FENCE LOCATION AND DETAILS.

12 SEE MUP-03, MUP-04, DT-04, AND THIS SHEET FOR FENCE LOCATION AND DETAILS.

REV	DATE	DESCRIPTION

Designed By: KGJ
Drawn By: DCV
Checked By: AFY
Approved By: ALK

CivilScience Engineers | Surveyors | Solutions

UTA

MSE WALL DETAIL

LEHI CITY
LEH_OP_1
PED OVERPASS STRUCTURE - UDOT STR NO. F-923
SR-92 & DIGITAL DRIVE

CADD Filename: LEH_OP_1-DT-05
UTA Contract No.: 18-2399TP
Drawing: DT-05
Sheet No.: 5 OF 8

DGN File: P:\Proj\0344489\LEH_OP_1-DT-05.dgn
03-MAR-2020

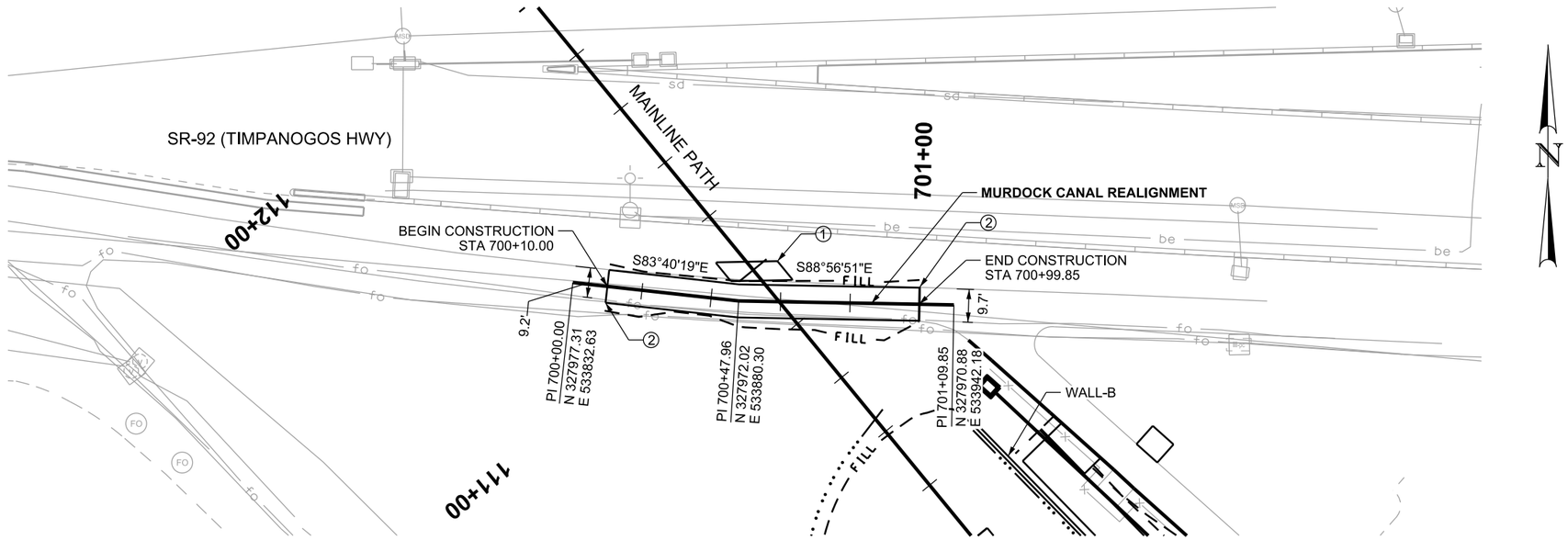

MURDOCK CANAL REALIGNMENT PLAN

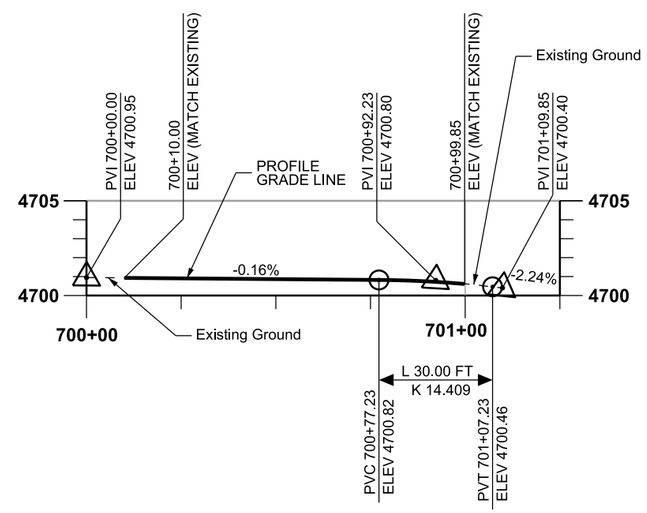

MURDOCK CANAL REALIGNMENT PROFILE

NOTES:

1. MURDOCK CANAL TRAIL EDGE OF PAVEMENT AT TWO FEET MINIMUM DISTANCE FROM STRUCTURE NO. F-923 BENT #2. SEE BR SERIES FOR STRUCUTRE NO. F-923 STRUCTURAL DETAILS. REDUCE TRAIL WIDTH TO 9.3' MIN TO ACHIEVE 2 FOOT CLEARANCE.
2. MATCH EXISTING TRAIL WIDTH.

REV	DATE	DESCRIPTION

Designed By: MSN
Drawn By: DCV
Checked By: NLB
Approved By: ALK

CivilScience Engineers | Surveyors | Solutions

UTA

MURDOCK CANAL REALIGNMENT DETAIL

LEHI CITY
LEH_OP_1
PED OVERPASS STRUCTURE - UDOT STR NO. F-923
SR-92 & DIGITAL DRIVE

CADD Filename: LEH_OP_1-DT-06
UTA Contract No.: 18-2399TP
Drawing: DT-06
Sheet No.: 6 OF 8

DGN File: P:\Proj\8344489\LEH_OP_1-DT-06.dgn
03-MAR-2020

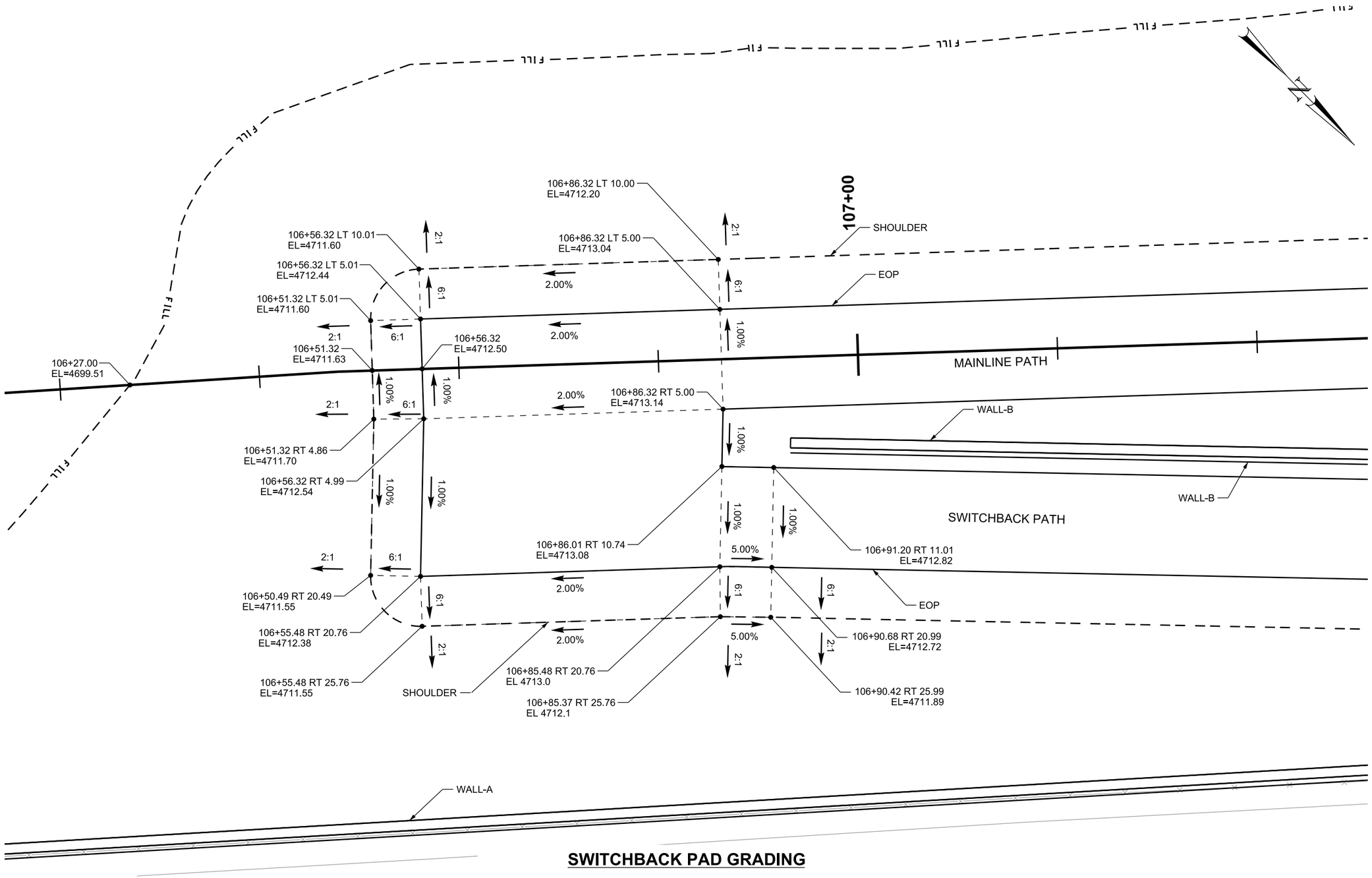

SWITCHBACK PAD GRADING

REV	DATE	DESCRIPTION

Designed By: MSN
Drawn By: DCV
Checked By: NLB
Approved By: ALK

CivilScience Engineers | Surveyors | Solutions

UTA

SWITCHBACK PAD GRADING DETAIL

LEHI CITY
LEH_OP_1
PED OVERPASS STRUCTURE - UDOT STR NO. F-923
SR-92 & DIGITAL DRIVE

CADD Filename: LEH_OP_1-DT-07
UTA Contract No.: 18-2399TP
Drawing: DT-07
Sheet No.: 7 OF 8

DGN File: IP_PWP:d0344489\LEH_OP_1-DT-07.dgn
03-MAR-2020

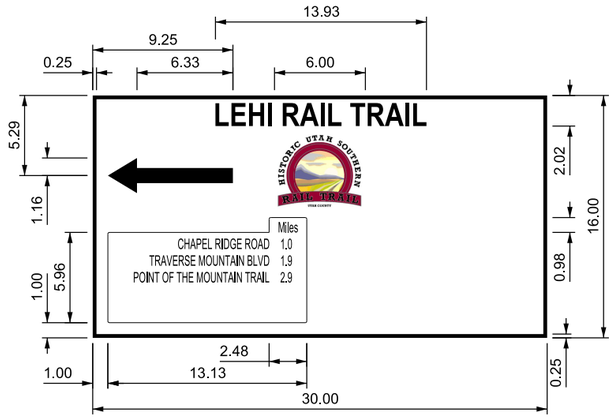

WAY FINDING SIGN DETAIL - 2.7-N

STA. 203+35.52 LT 9.71
(DIMENSIONS IN INCHES)

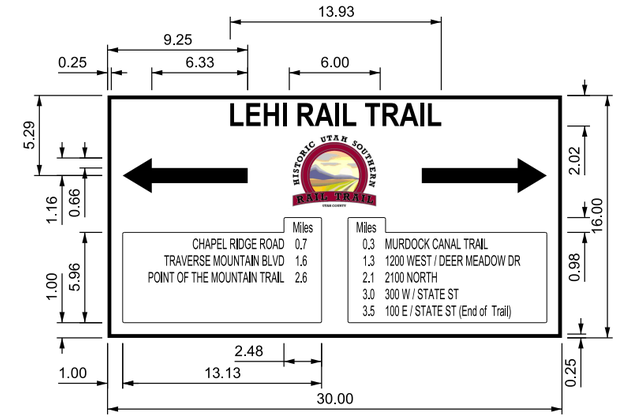

WAY FINDING SIGN DETAIL - 4.5-N

STA. 119+60.01 RT 9.60
(DIMENSIONS IN INCHES)

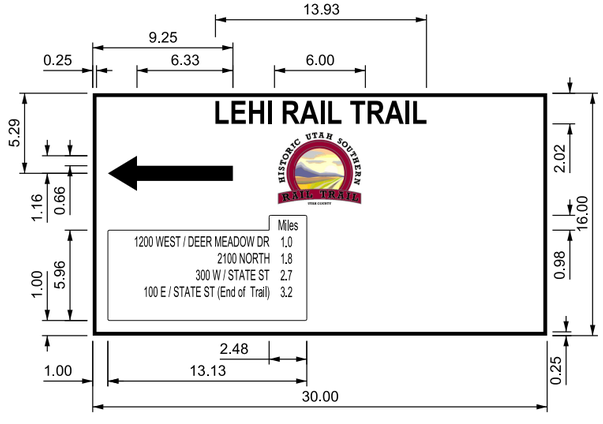

WAY FINDING SIGN DETAIL - 2.10-N

STA. 110+40.14 LT 32.59
(DIMENSIONS IN INCHES)

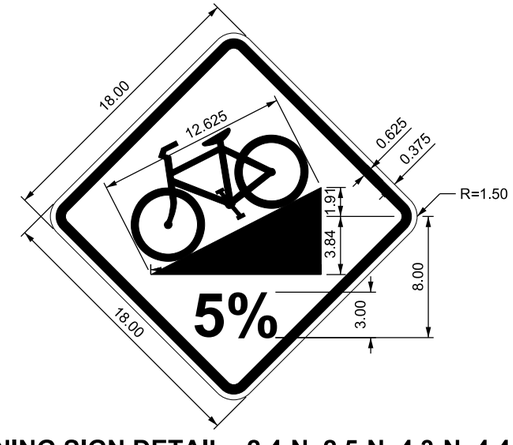

WARNING SIGN DETAIL - 2.4-N, 2.5-N, 4.3-N, 4.4-N

STA. 109+74.40 LT 9.00
STA. 200+27.13 RT 8.79
STA. 305.19.40 LT 9.00
STA. 115+30.60 RT 7.50
(DIMENSIONS IN INCHES)

REV	DATE	DESCRIPTION

Designed By: MSN
Drawn By: DCV
Checked By: NLB
Approved By: ALK

CivilScience Engineers | Surveyors | Solutions

UTA

SIGN DETAIL

LEHI CITY
LEH_OP_1
PED OVERPASS STRUCTURE - UDOT STR NO. F-923
SR-92 & DIGITAL DRIVE

CADD Filename: LEH_OP_1-DT-08
UTA Contract No.: 18-2399TP
Drawing: DT-08
Sheet No.: 8 OF 8

DGN File: IP PWPrd@344489\LEH_OP_1-DT-08.dgn
03-MAR-2020

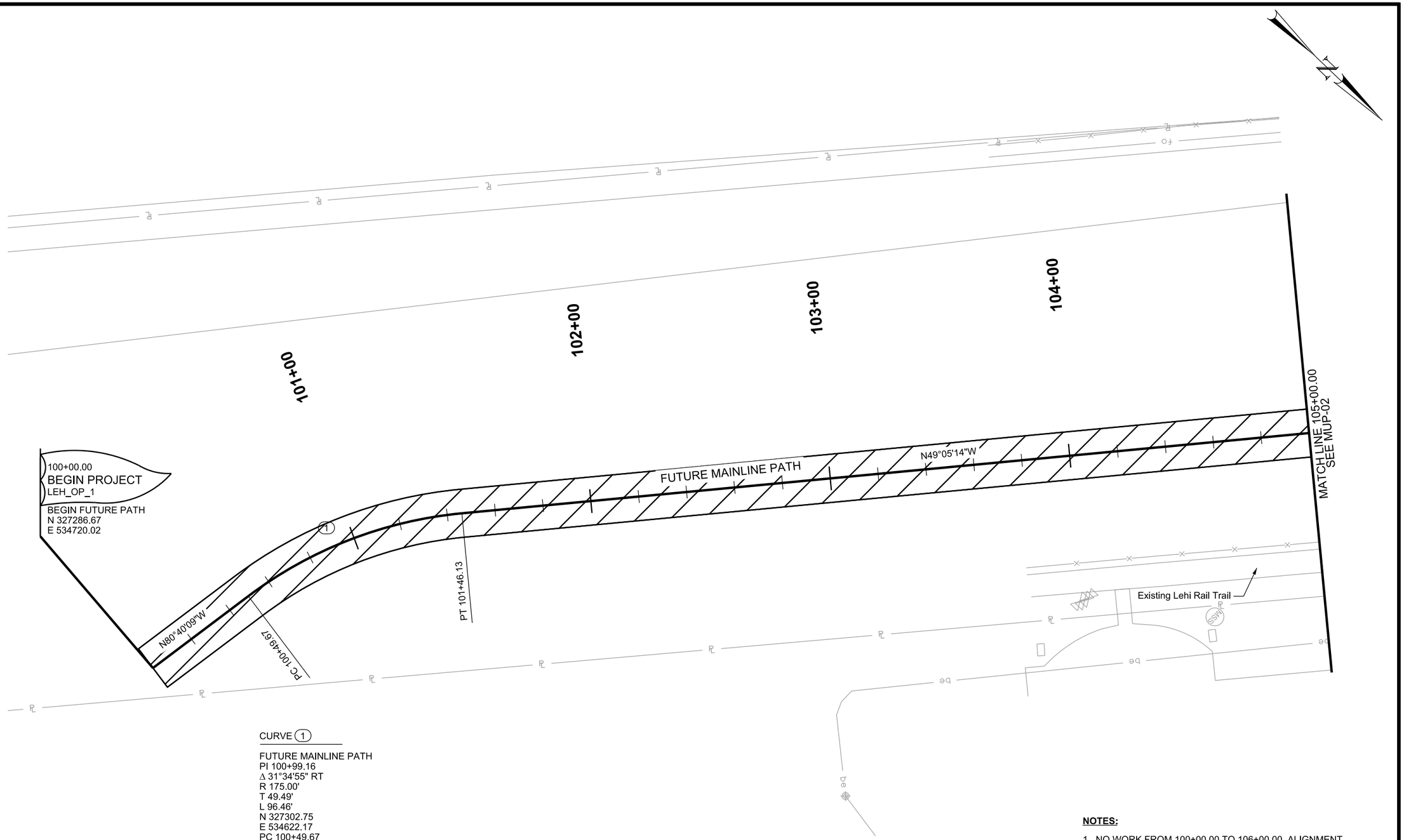

CURVE 1

FUTURE MAINLINE PATH
PI 100+99.16
Δ 31°34'55" RT
R 175.00'
T 49.49'
L 96.46'
N 327302.75
E 534622.17
PC 100+49.67
PT 101+46.13

NOTES:

1. NO WORK FROM 100+00.00 TO 106+00.00. ALIGNMENT PROVIDED IN THIS STATION RANGE TO SHOW FUTURE TRAIL ALIGNMENT.

REV	DATE	DESCRIPTION

Designed By: MSN
Drawn By: DCV
Checked By: NLB
Approved By: ALK

CivilScience Engineers | Surveyors | Solutions

UTA

PATH

LEHI CITY
LEH_OP_1
PED OVERPASS STRUCTURE - UDOT STR NO. F-923
SR-92 & DIGITAL DRIVE

CADD Filename: LEH_OP_MUP-01.dgn
UTA Contract No.: 18-2399TP
Drawing: MUP-01
Sheet No.: 1 OF 10

DGN File: JP_PWPcd0344489\LEH_OP_1-MUP-01.dgn
03-MAR-2020

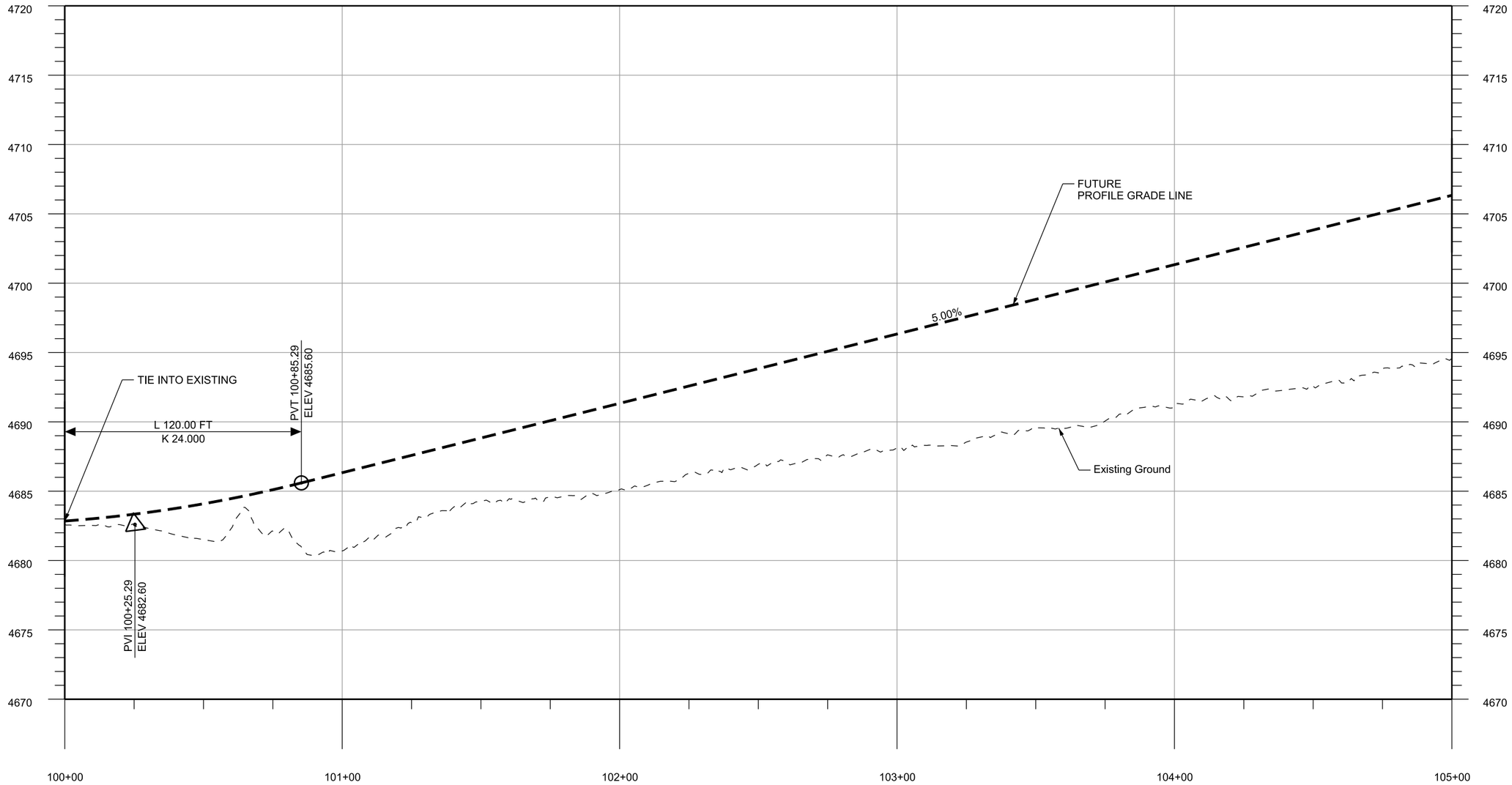

FUTURE MAINLINE PATH PROFILE

REV	DATE	DESCRIPTION

Designed By: MSN
Drawn By: DCV
Checked By: NLB
Approved By: ALK

CivilScience Engineers | Surveyors | Solutions

UTA

PATH PROFILE

LEHI CITY
LEH_OP_1
PED OVERPASS STRUCTURE - UDOT STR NO. F-923
SR-92 & DIGITAL DRIVE

CADD Filename: LEH_OP_1-MUP-01A.dgn
UTA Contract No.: 18-2399TP
Drawing: MUP-01A
Sheet No.: 2 OF 10

DGN File: IP_PWPcd@344489\LEH_OP_1-MUP-01A.dgn
03-MAR-2020

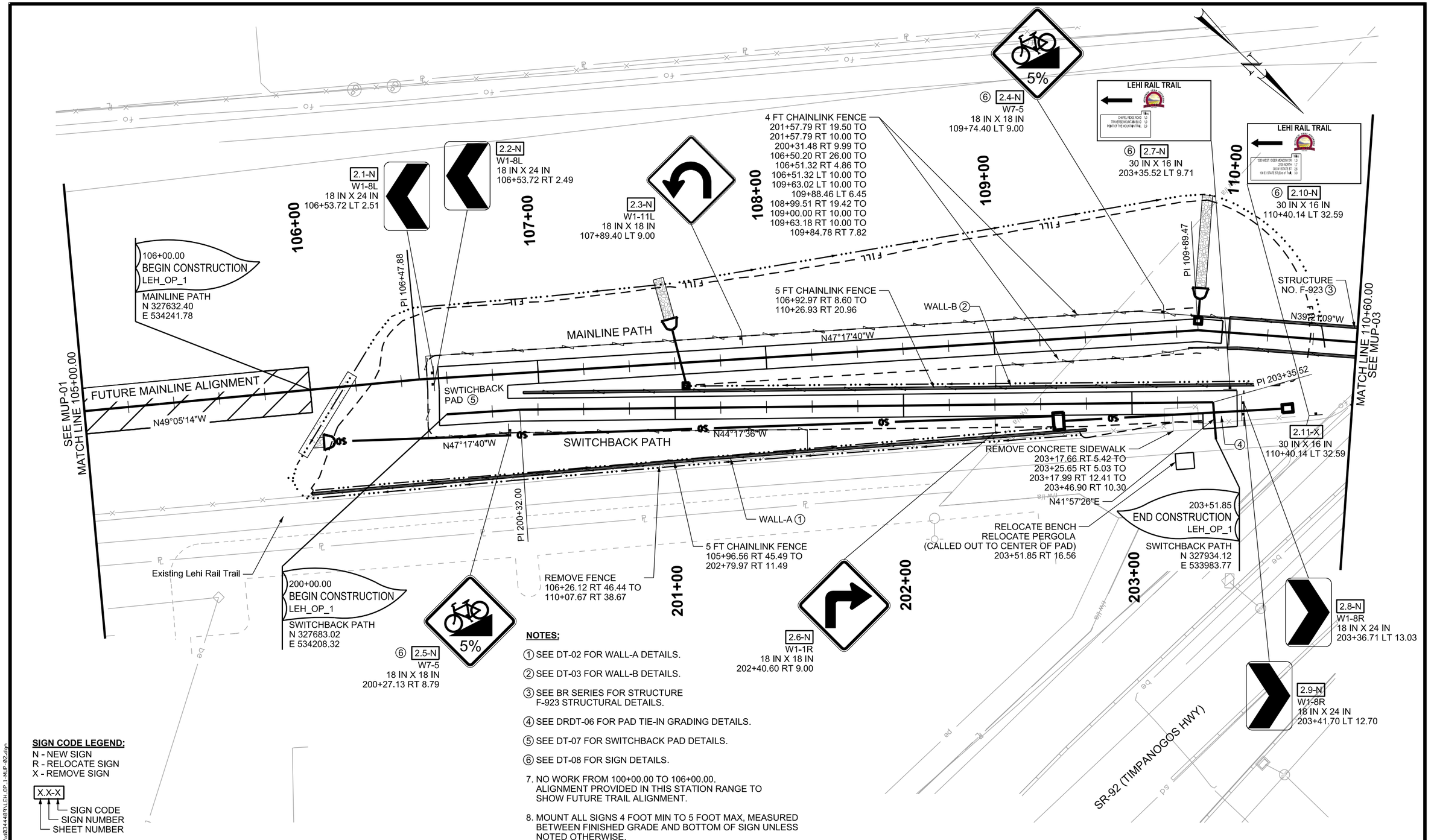

NOTES:

① SEE DT-02 FOR WALL-A DETAILS.

② SEE DT-03 FOR WALL-B DETAILS.

③ SEE BR SERIES FOR STRUCTURE F-923 STRUCTURAL DETAILS.

④ SEE DRDT-06 FOR PAD TIE-IN GRADING DETAILS.

⑤ SEE DT-07 FOR SWITCHBACK PAD DETAILS.

⑥ SEE DT-08 FOR SIGN DETAILS.

7. NO WORK FROM 100+00.00 TO 106+00.00. ALIGNMENT PROVIDED IN THIS STATION RANGE TO SHOW FUTURE TRAIL ALIGNMENT.

8. MOUNT ALL SIGNS 4 FOOT MIN TO 5 FOOT MAX, MEASURED BETWEEN FINISHED GRADE AND BOTTOM OF SIGN UNLESS NOTED OTHERWISE.

SIGN CODE LEGEND:

N - NEW SIGN
R - RELOCATE SIGN
X - REMOVE SIGN

X.X-X
- SIGN CODE
- SIGN NUMBER
- SHEET NUMBER

REV	DATE	DESCRIPTION

Designed By: MSN
Drawn By: DCV
Checked By: NLB
Approved By: ALK

CivilScience Engineers | Surveyors | Solutions

UTA

PATH

LEHI CITY
LEH_OP_1
PED OVERPASS STRUCTURE - UDOT STR NO. F-923
SR-92 & DIGITAL DRIVE

CADD Filename: LEH_OP_1-MUP-02.dgn
UTA Contract No.: 18-2399TP
Drawing: MUP-02
Sheet No.: 3 OF 10

DGN Files: JP_PkPcd0344489\LEH_OP_1-MUP-02.dgn
03-MAR-2020

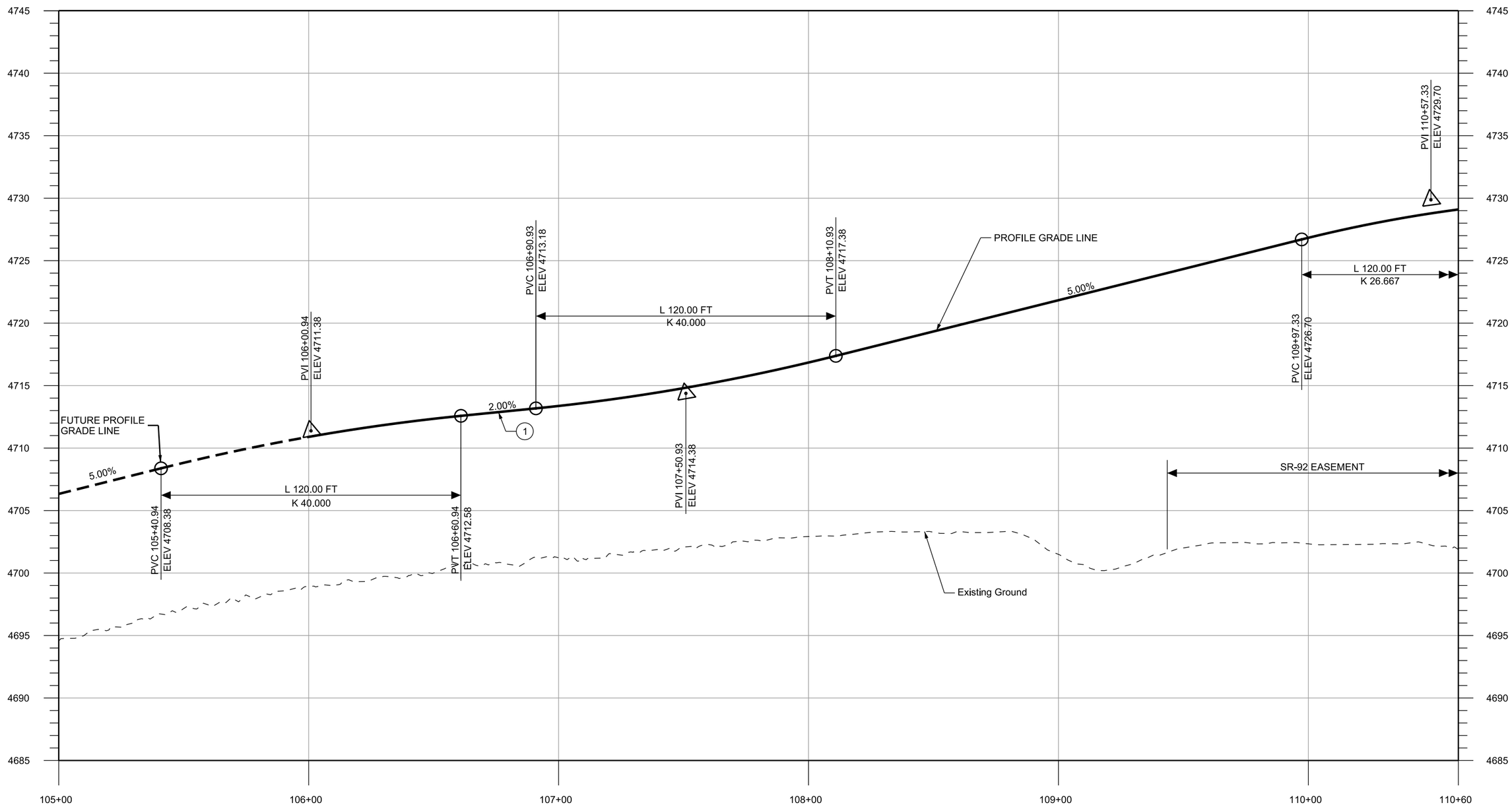

MAINLINE PATH PROFILE

NOTES:

1. SEE DT-07 FOR SWITCHBACK PAD GRADING DETAILS.

REV	DATE	DESCRIPTION

Designed By: MSN
Drawn By: DCV
Checked By: NLB
Approved By: ALK

CivilScience Engineers | Surveyors | Solutions

UTA

PATH PROFILE

LEHI CITY
LEH_OP_1
PED OVERPASS STRUCTURE - UDOT STR NO. F-923
SR-92 & DIGITAL DRIVE

CADD Filename: LEH_OP_1-MUP-02A.dgn
UTA Contract No.: 18-2399TP
Drawing: MUP-02A
Sheet No.: 4 OF 10

DGN File: P:\Proj\8344489\LEH_OP_1-MUP-02A.dgn
03-MAR-2020

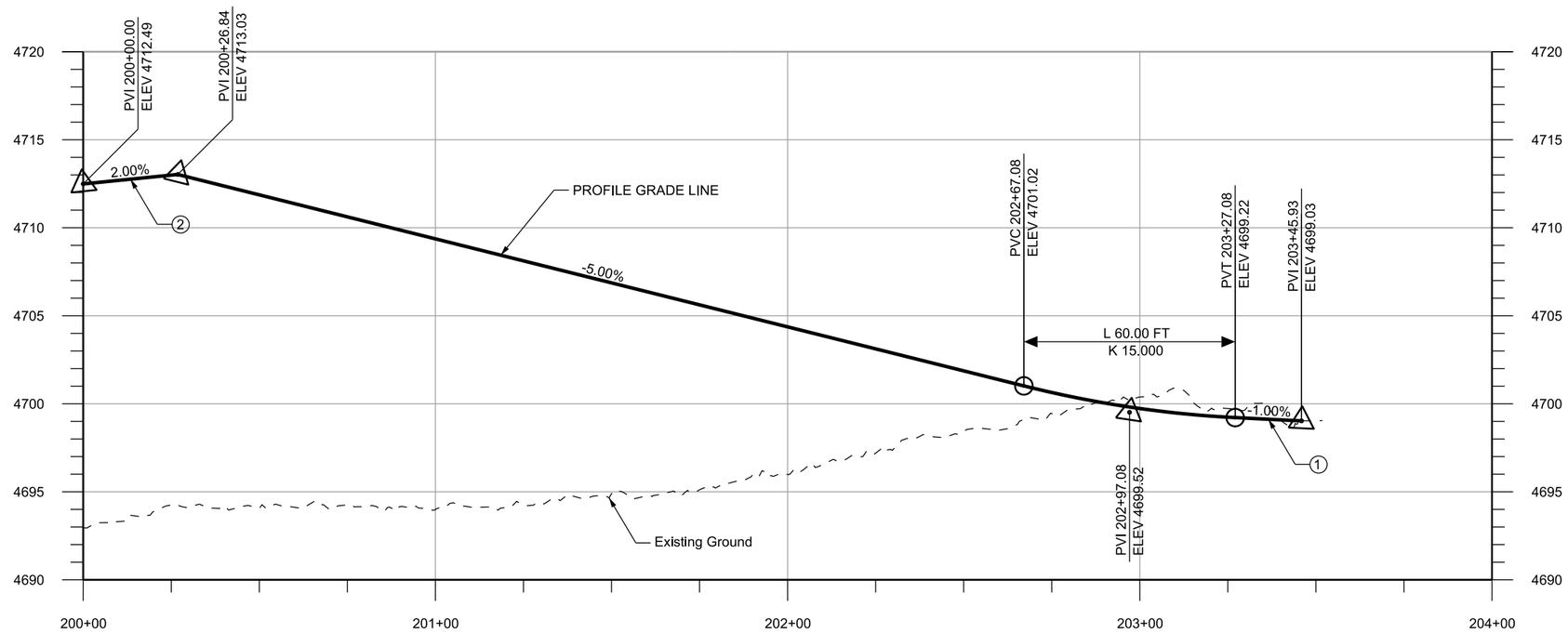

SWITCHBACK PATH PROFILE

NOTES:

1. SEE DRDT-06 FOR PAD TIE-IN GRADING DETAILS.
2. SEE DT-07 FOR SWITCHBACK PAD GRADING DETAILS.

REV	DATE	DESCRIPTION

Designed By: MSN
Drawn By: DCV
Checked By: NLB
Approved By: ALK

CivilScience Engineers | Surveyors | Solutions

UTA

PATH PROFILE

LEHI CITY
LEH_OP_1
PED OVERPASS STRUCTURE - UDOT STR NO. F-923
SR-92 & DIGITAL DRIVE

CADD Filename: LEH_OP_1-MUP-02B.dgn
UTA Contract No.: 18-2399TP
Drawing: MUP-02B
Sheet No.: 5 OF 10

DGN File: P:\Proj\8344489\LEH_OP_1-MUP-02B.dgn
03-MAR-2020

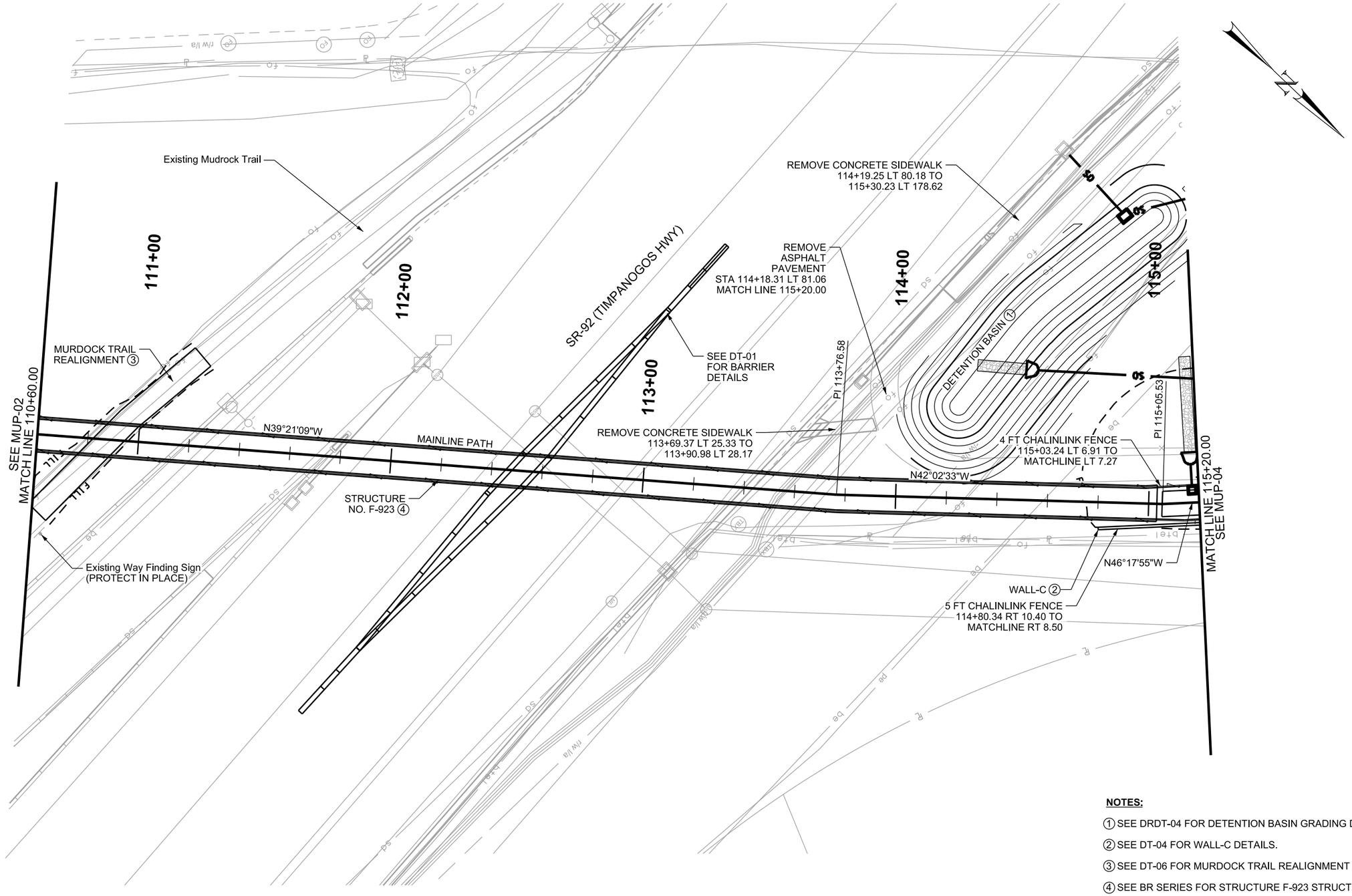

NOTES:

① SEE DRDT-04 FOR DETENTION BASIN GRADING DETAILS.

② SEE DT-04 FOR WALL-C DETAILS.

③ SEE DT-06 FOR MURDOCK TRAIL REALIGNMENT DETAILS.

④ SEE BR SERIES FOR STRUCTURE F-923 STRUCTURAL DETAILS.

REV	DATE	DESCRIPTION

Designed By: MSN
Drawn By: DCV
Checked By: NLB
Approved By: ALK

CivilScience Engineers | Surveyors | Solutions

UTA

PATH

LEHI CITY
LEH_OP_1
PED OVERPASS STRUCTURE - UDOT STR NO. F-923
SR-92 & DIGITAL DRIVE

CADD Filename: LEH_OP_1-MUP-03.dgn
UTA Contract No.: 18-2399TP
Drawing: MUP-03
Sheet No.: 6 OF 10

DGN File: IP_PWPn0344489\LEH_OP_1-MUP-03.dgn
03-MAR-2020

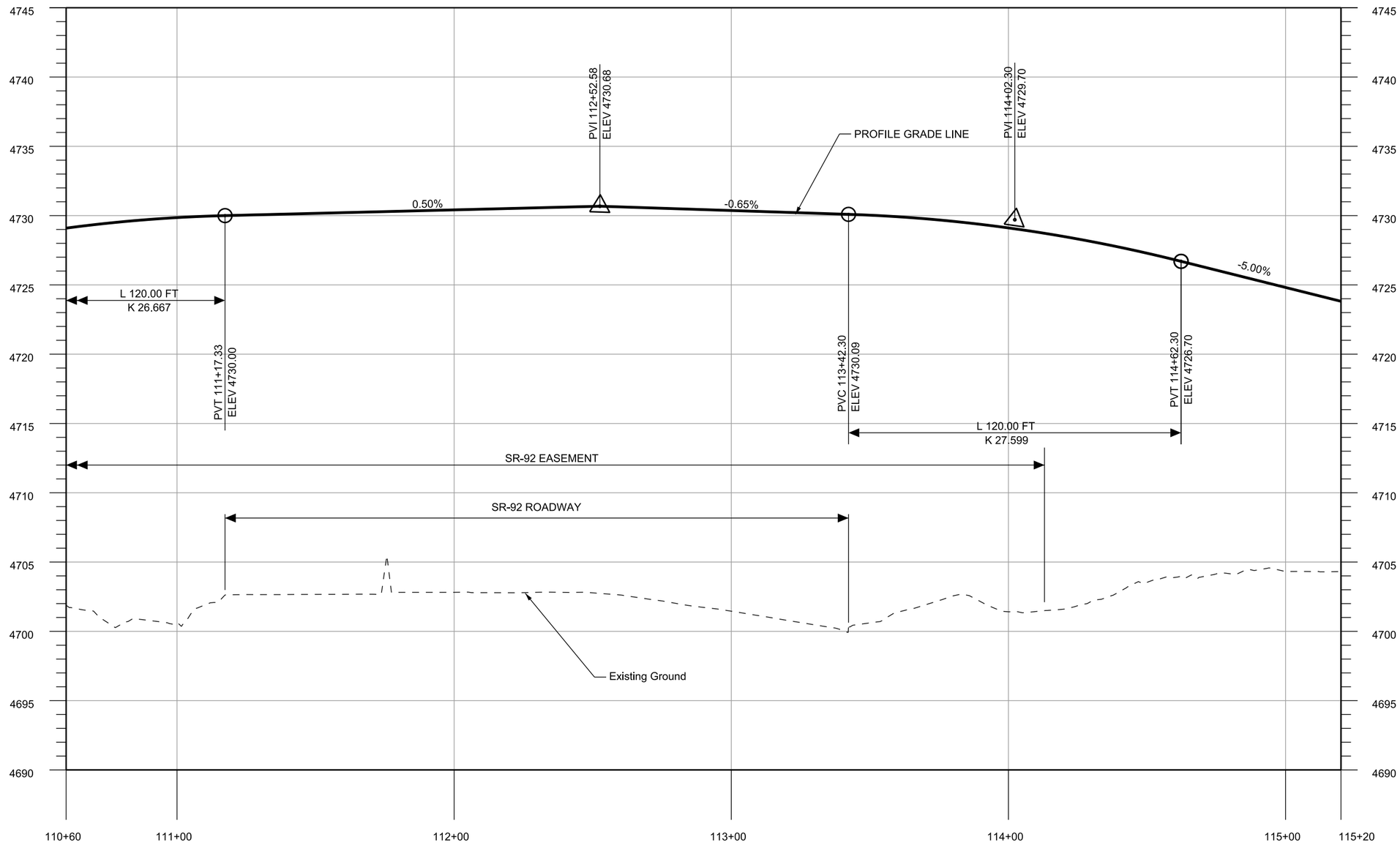

MAINLINE PATH PROFILE

REV	DATE	DESCRIPTION

Designed By: MSN
Drawn By: DCV
Checked By: NLB
Approved By: ALK

CivilScience Engineers | Surveyors | Solutions

UTA

PATH PROFILE

LEHI CITY
LEH_OP_1
PED OVERPASS STRUCTURE - UDOT STR NO. F-923
SR-92 & DIGITAL DRIVE

CADD Filename: LEH_OP_1-MUP-03A.dgn
UTA Contract No.: 18-2399TP
Drawing: MUP-03A
Sheet No.: 7 OF 10

DGN File: IP_PwPw\d0344489\LEH_OP_1-MUP-03A.dgn
03-MAR-2020

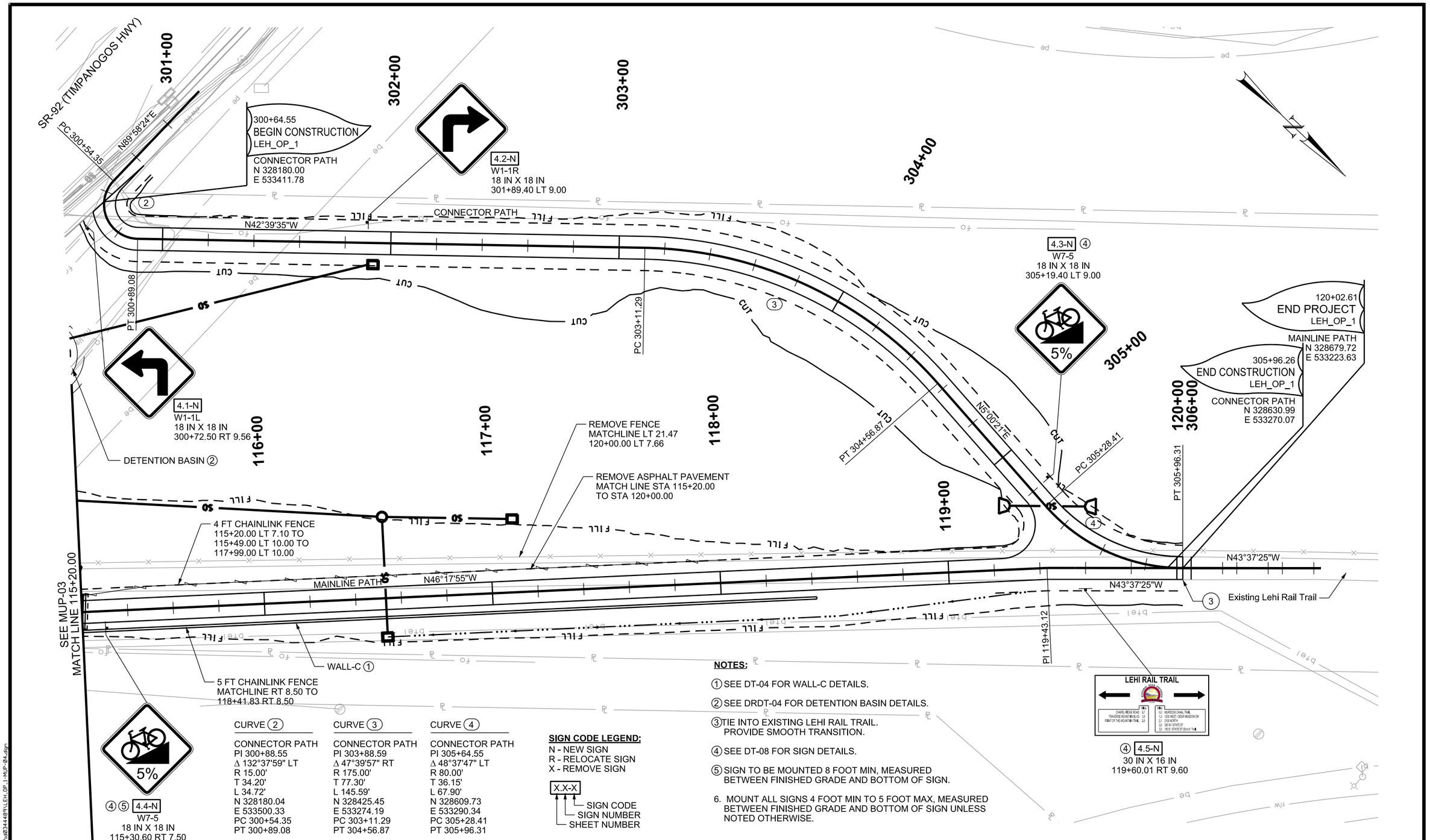

NOTES:

① SEE DT-04 FOR WALL-C DETAILS.

② SEE DRDT-04 FOR DETENTION BASIN DETAILS.

③ TIE INTO EXISTING LEHI RAIL TRAIL. PROVIDE SMOOTH TRANSITION.

④ SEE DT-08 FOR SIGN DETAILS.

⑤ SIGN TO BE MOUNTED 8 FOOT MIN, MEASURED BETWEEN FINISHED GRADE AND BOTTOM OF SIGN.

6. MOUNT ALL SIGNS 4 FOOT MIN TO 5 FOOT MAX, MEASURED BETWEEN FINISHED GRADE AND BOTTOM OF SIGN UNLESS NOTED OTHERWISE.

CURVE ②	CURVE ③	CURVE ④
CONNECTOR PATH	CONNECTOR PATH	CONNECTOR PATH
PI 300+88.55	PI 303+88.59	PI 305+64.55
Δ 132°37'59" LT	Δ 47°39'57" RT	Δ 48°37'47" LT
R 15.00'	R 175.00'	R 80.00'
T 34.20'	T 77.30'	T 36.15'
L 34.72'	L 145.59'	L 67.90'
N 328180.04	N 328425.45	N 328609.73
E 533500.33	E 533274.19	E 533290.34
PC 300+54.35	PC 303+11.29	PC 305+28.41
PT 300+89.08	PT 304+56.87	PT 305+96.31

SIGN CODE LEGEND:

N - NEW SIGN
R - RELOCATE SIGN
X - REMOVE SIGN

X.X-X
- SIGN CODE
- SIGN NUMBER
- SHEET NUMBER

REV	DATE	DESCRIPTION

Designed By: MSN
Drawn By: DCV
Checked By: NLB
Approved By: ALK

CivilScience Engineers | Surveyors | Solutions

UTA

PATH

LEHI CITY
LEH_OP_1
PED OVERPASS STRUCTURE - UDOT STR NO. F-923
SR-92 & DIGITAL DRIVE

CADD Filename: LEH_OP_1-MUP-04.dgn
UTA Contract No.: 18-2399TP
Drawing: MUP-04
Sheet No.: 8 OF 10

DGN: F:\ap:1P:PwPw\d0344489\LEH_OP_1-MUP-04.dgn
03-MAR-2020

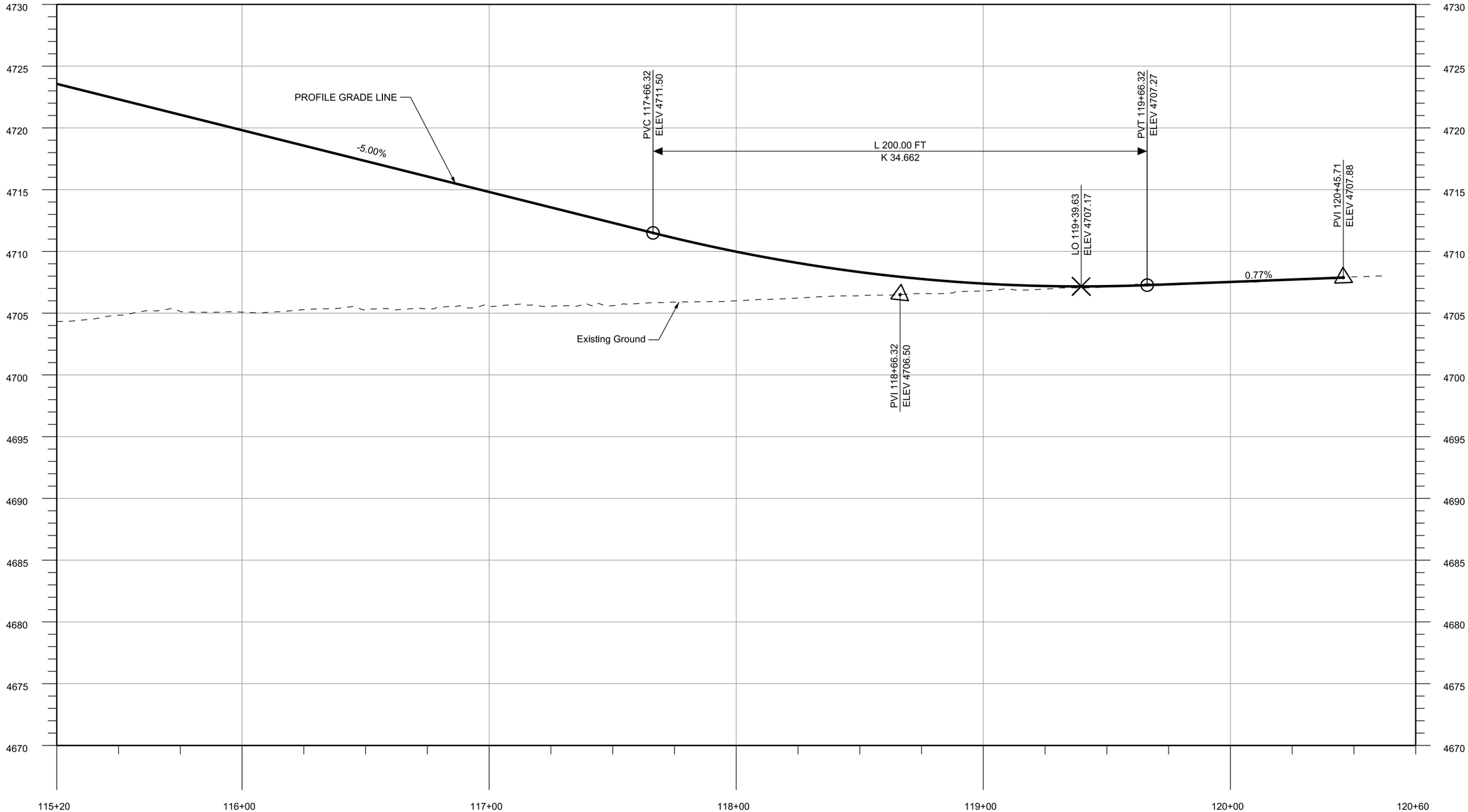

MAINLINE PATH PROFILE

REV	DATE	DESCRIPTION

Designed By: MSN
Drawn By: DCV
Checked By: NLB
Approved By: ALK

CivilScience Engineers | Surveyors | Solutions

UTA

PATH PROFILE

LEHI CITY
LEH_OP_1
PED OVERPASS STRUCTURE - UDOT STR NO. F-923
SR-92 & DIGITAL DRIVE

CADD Filename: LEH_OP_1-MUP-04A.dgn
UTA Contract No.: 18-2399TP
Drawing: MUP-04A
Sheet No.: 9 OF 10

DGN File: IP_PwPw\d0344489\LEH_OP_1-MUP-04A.dgn
03-MAR-2020

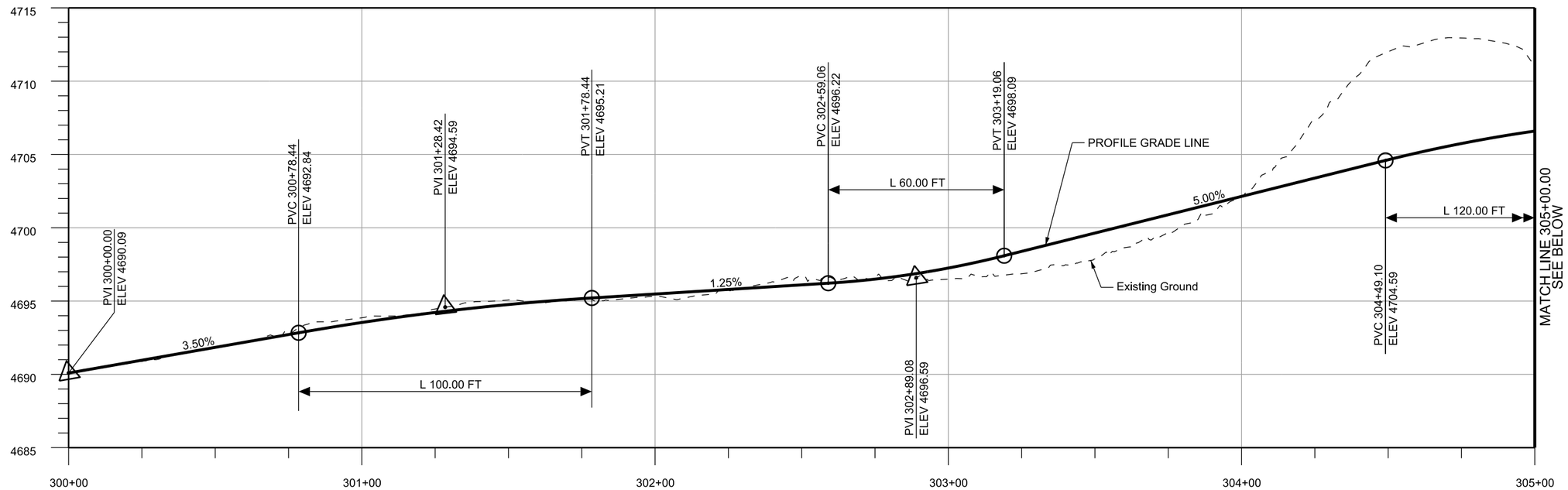

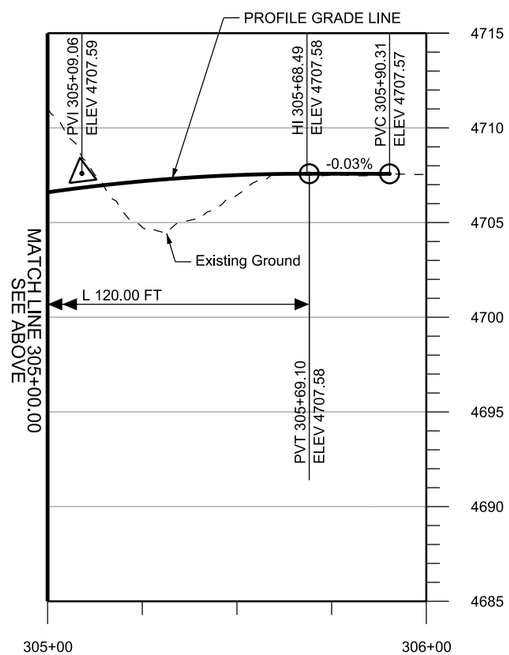

CONNECTOR PATH PROFILE

REV	DATE	DESCRIPTION

Designed By: MSN
Drawn By: DCV
Checked By: NLB
Approved By: ALK

CivilScience Engineers | Surveyors | Solutions

UTA

PATH PROFILE

LEHI CITY
LEH_OP_1
PED OVERPASS STRUCTURE - UDOT STR NO. F-923
SR-92 & DIGITAL DRIVE

CADD Filename: LEH_OP_1-MUP-04B.dgn
UTA Contract No.: 18-2399TP
Drawing: MUP-04B
Sheet No.: 10 OF 10

DGN File:IP-PWPu0344489\LEH_OP_1-MUP-04B.dgn
03-MAR-2020

GENERAL DRAINAGE NOTES

1. ALL UTILITY LOCATIONS ARE APPROXIMATE AND SUBJECT TO FIELD VERIFICATION.
2. PIPE LENGTH SHOWN ON DRAINAGE PROFILES IS HORIZONTAL LENGTH MEASURED FROM INSIDE FACE OF UPSTREAM STRUCTURE TO INSIDE FACE OF DOWNSTREAM STRUCTURE.
3. WHERE A DISCREPANCY EXISTS BETWEEN PIPE SLOPE AND INVERT ELEVATIONS, INVERT ELEVATIONS SHALL GOVERN.
4. ALL EXISTING PIPE ELEVATIONS AND LOCATIONS ARE APPROXIMATE AND SUBJECT TO FIELD VERIFICATION.
5. APPLY THE APPLICABLE BEST MANAGEMENT PRACTICES (BMP'S) FOR TEMPORARY EROSION CONTROL IN ACCORDANCE WITH THE DRAINAGE PLAN SHEETS AND THE STORMWATER POLLUTION PREVENTION PLAN (SWPPP.) CONTRACTOR TO COORDINATE WITH EROSION CONTROL SUPERVISOR AS NEEDED.
6. MAINTAIN AND KEEP EXISTING STORM DRAIN SYSTEMS OPERATIONAL AS NEEDED TO PROVIDE DRAINAGE DURING CONSTRUCTION.
7. MEET UDOT STANDARD SPECIFICATION SECTION 02610 DRAINAGE PIPE FOR ALL PIPE MATERIAL AND INSTALLATION.
8. USE CLASS III, CORROSION CLASS C UNLESS OTHERWISE NOTED FOR ALL REINFORCED CONCRETE PIPE (RCP) SPECIFIED IN DRAINAGE PLANS.
9. PIPE MATERIAL IS SPECIFIED IN DRAINAGE PLANS. ALL PIPE MATEIRAL AND INSTALLATION SHALL CONFORM TO UDOT SPECIFICATION SECTION 02610 DRAINGE PIPE.
10. PROTECT IN PLACE ALL EXISTING STORM DRAIN/IRRIGATION FACILITIES UNLESS OTHERWISE NOTED.
11. NOTIFY AND COORDIANTE WITH IRRIGATION COMPANIES PRIOR TO ANY WORK PERFORMED ON ANY IRRIGATION FACILITIES.
12. MATCH EXISTING PIPE MATERIAL WITH PROPOSED PIPE MATERIAL WHEN CONNECTING PROPOSED PIPE TO EXISTING PIPE WITH A CONCRETE COLLAR, EXCEPT WHERE METAL PIPE IS THE EXISTING PIPE.
13. FOLLOW UDOT STANDARD SPECIFICATION 02221 REMOVE STRUCTURE AND OBSTRUCTION FOR PIPES LABELED TO BE REMOVED. REMOVE EXISTING PIPE WHERE POSSIBLE AND FLOW FILL IF THE PIPE IS OUTSIDE THE PAVE CUT LINE.
14. CORRUGATED METAL PIPE (CMP) IS NOT TO BE USED AS A PROPOSED PIPE MATERIAL.
15. REQUIRE SHOP DRAWING SUBMITTAL AND REVIEW FOR DRAINAGE STRUCTURES NOT MEETING REQUIREMENTS OF SPECIFIED STANDARD DRAWINGS.

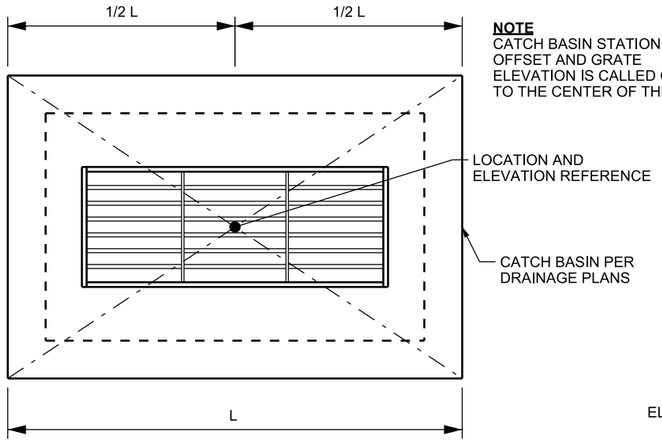

FIELD INLET PLACEMENT

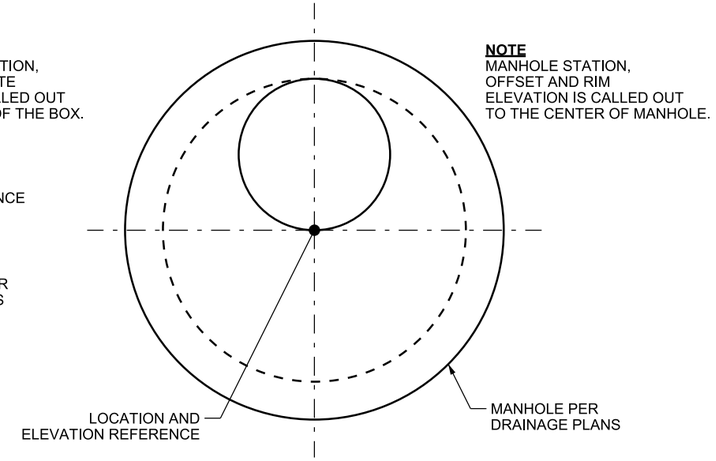

MANHOLE PLACEMENT

LAYOUT A
FIELD STRUCTURE PLACEMENT

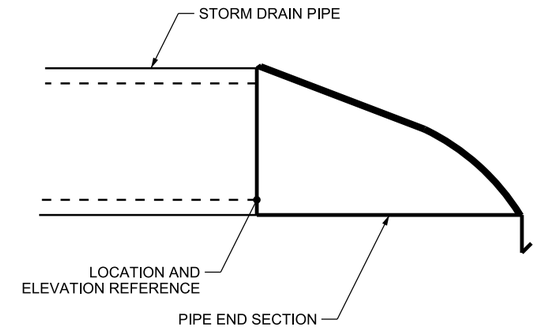

LAYOUT B
END SECTION PLACEMENT

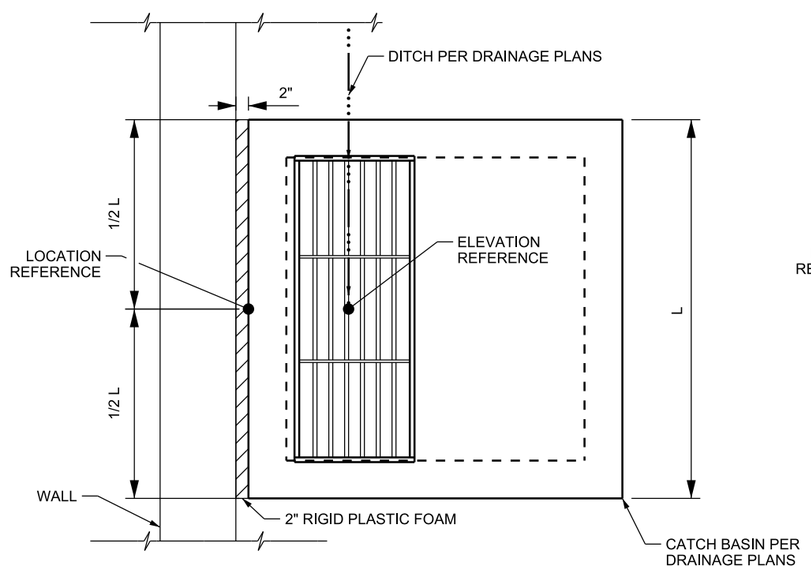

CB 5 INLET PLACEMENT

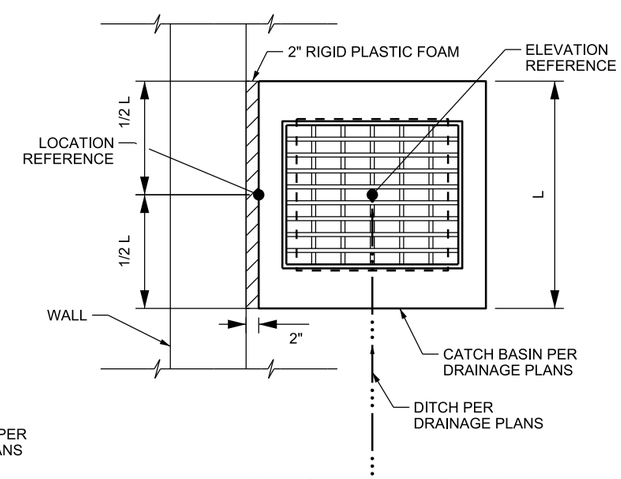

DB 1 INLET PLACEMENT

LAYOUT C
INLET PLACEMENT ADJACENT TO WALL

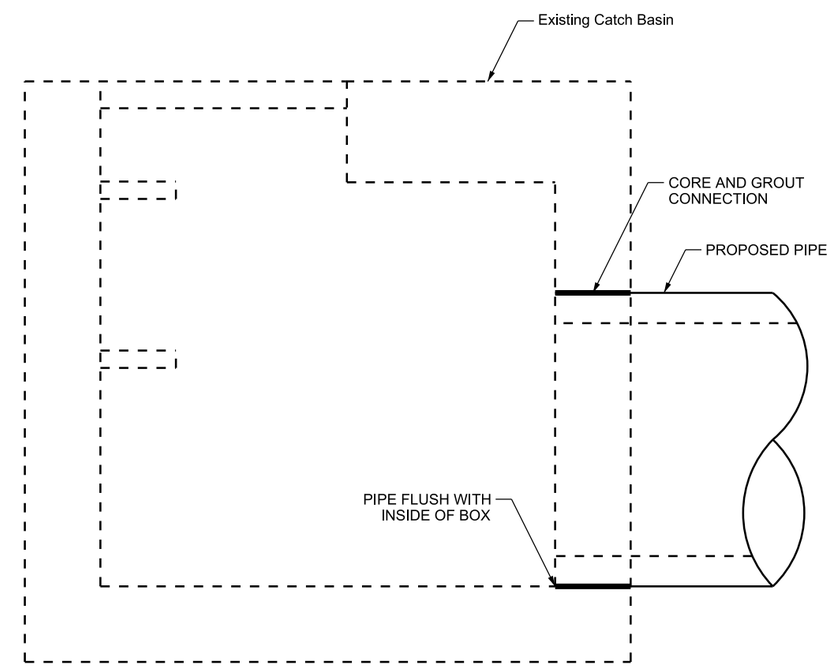

CONNECTION DETAIL
PROPOSED PIPE TO EXISTING STRUCTURE

REV	DATE	DESCRIPTION

Designed By: MSN
Drawn By: DCV
Checked By: NLB
Approved By: ALK

CivilScience Engineers | Surveyors | Solutions

UTA

DRAINAGE STRUCTURE PLACEMENT/ CONNECTION DETAIL

LEHI CITY
LEH_OP_1
PED OVERPASS STRUCTURE - UDOT STR NO. F-923
SR-92 & DIGITAL DRIVE

CADD Filename: LEH_OP_1-DRDT-02.dgn
UTA Contract No.: 18-2399TP
Drawing: DRDT-02
Sheet No.: 2 OF 6

DGN: Files:P:\Proj\0344489\LEH_OP_1-DRDT-02.dgn
03-MAR-2020

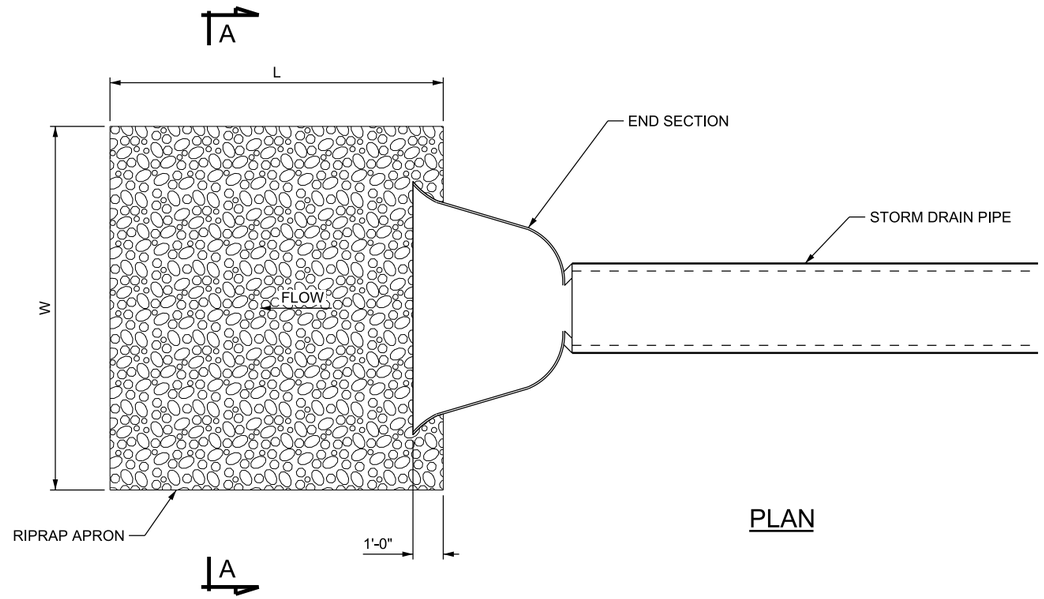

PLAN

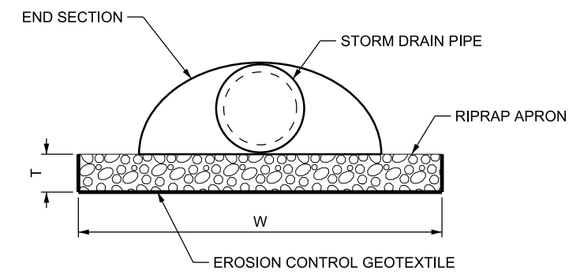

SECTION A-A

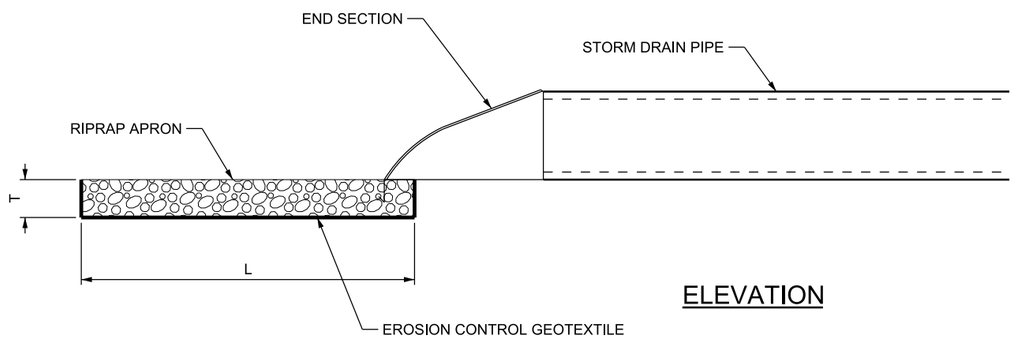

ELEVATION

APRON ID	D50 IN	T IN	L FT	W FT	EROSION CONTROL GEOTEXTILE SQYD	LOOSE RIPRAP CUYD	PIPE SIZE (IN)	VELOCITY (FPS)
P 02-03	6	12	45.8	3.0	17	5	12	3.6
P 02-04	6	12	21.8	3.0	9	2	12	2.0
P 02-07	6	12	5.0	4.5	5	1	18	4.7
P 03-01	6	12	42.6	3.0	16	5	12	2.1
P 04-07	6	12	20.5	6.0	16	5	24	3.5
TOTAL					63	18		

RIPRAP PLACEMENT DETAIL

REV	DATE	DESCRIPTION

Designed By: MSN
Drawn By: DCV
Checked By: NLB
Approved By: ALK

CivilScience Engineers | Surveyors | Solutions

UTA

RIPRAP PLACEMENT DETAIL

LEHI CITY
LEH_OP_1
PED OVERPASS STRUCTURE - UDOT STR NO. F-923
SR-92 & DIGITAL DRIVE

CADD Filename: LEH_OP_1-DRDT-03.dgn
UTA Contract No.: 18-2399TP
Drawing: DRDT-03
Sheet No.: 3 OF 6

DGN Files IP PWP:d0344489\LEH_OP_1-DRDT-03.dgn
03-MAR-2020

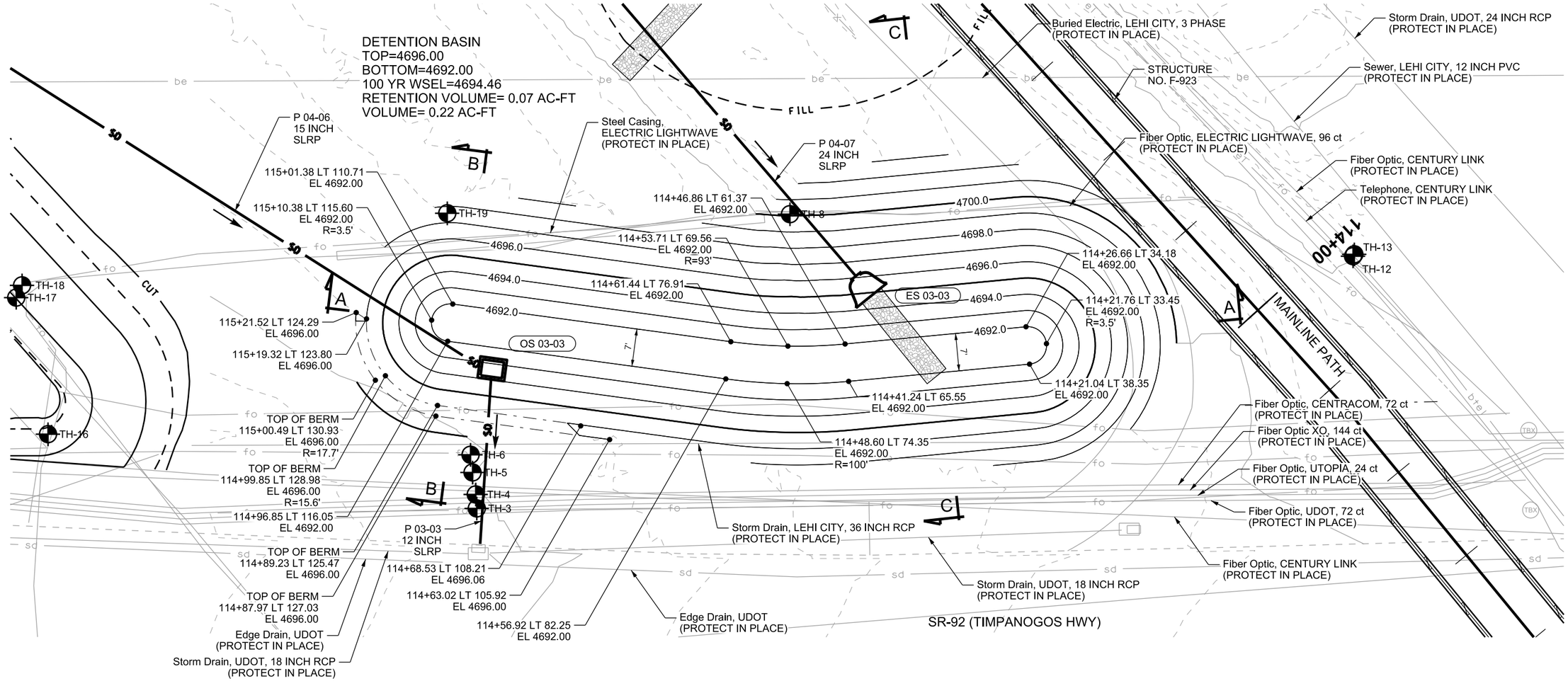

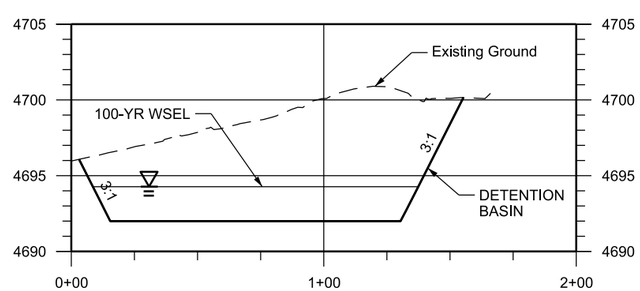

SECTION A-A

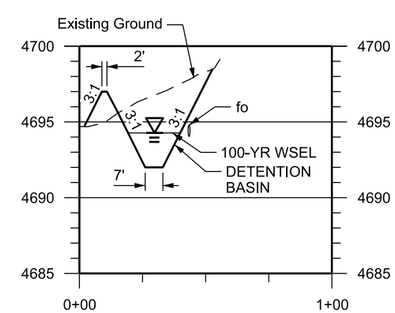

SECTION B-B

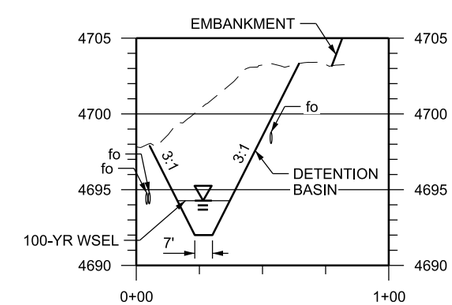

SECTION C-C

NOTES:

1. SEE DR-01 FOR TEST HOLE INFORMATION.

REV	DATE	DESCRIPTION

Designed By: MSN
Drawn By: DCV
Checked By: NLB
Approved By: ALK

CivilScience Engineers | Surveyors | Solutions

UTA

DETENTION BASIN GRADING DETAIL

LEHI CITY
LEH_OP_1
PED OVERPASS STRUCTURE - UDOT STR NO. F-923
SR-92 & DIGITAL DRIVE

CADD Filename: LEH_OP_1-DRDT-04.dgn
UTA Contract No.: 18-2399TP
Drawing: DRDT-04
Sheet No.: 4 OF 6

DGN File: IP_PWPx@344489\LEH_OP_1-DRDT-04.dgn
03-MAR-2020

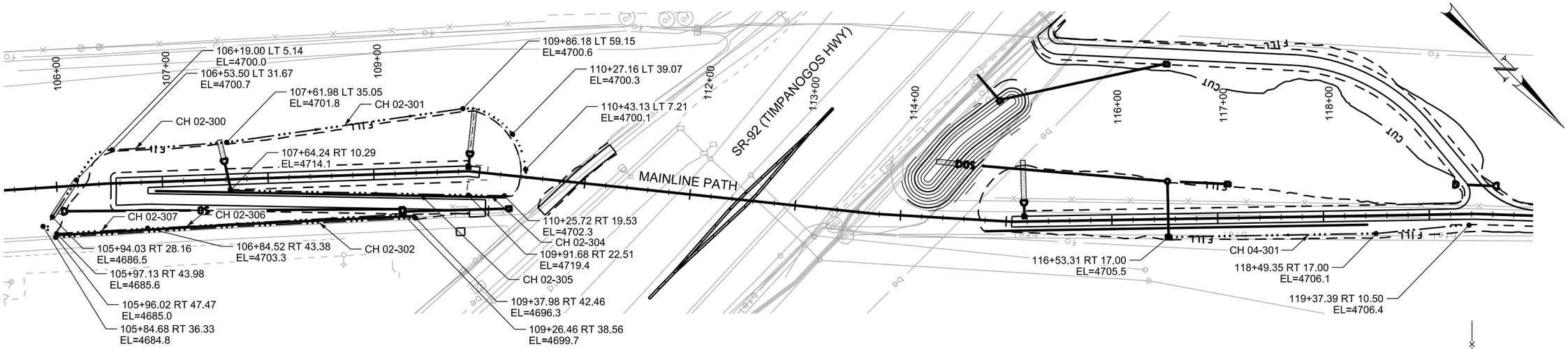

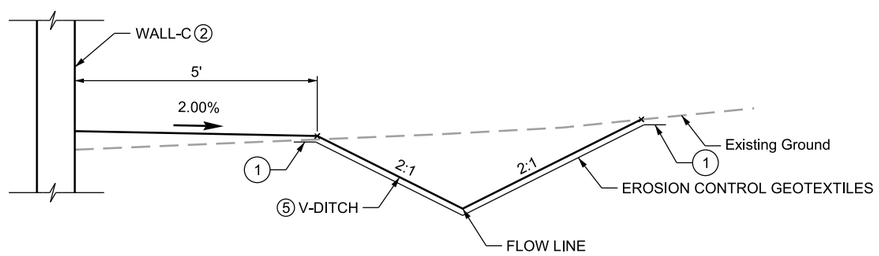

TYPICAL A

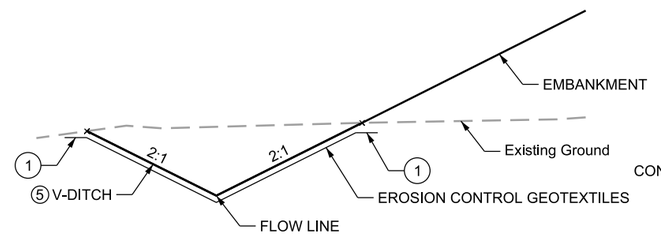

TYPICAL B

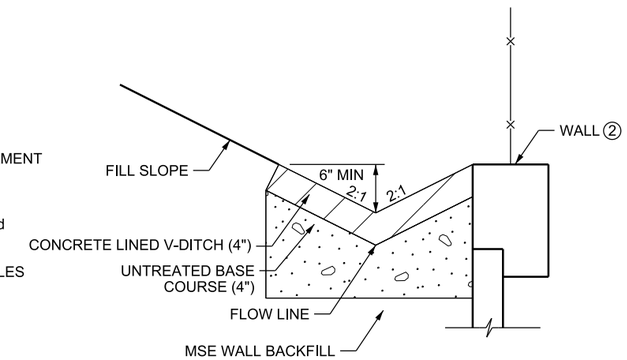

TYPICAL C

NOTES:

① KEY-IN EROSION CONTROL GEOTEXTILE 1' MIN PAST DITCH TOP OF BANK AS SHOWN.

② SEE DT-02, DT-03 AND DT-05 FOR WALL DETAILS.

③ SEE DT-04 AND DT-05 FOR WALL DETAILS.

④ SEE DT-02 AND DT-05 FOR WALL DETAILS.

⑤ SEE TABLE THIS SHEET FOR DITCH LINING MATERIAL.

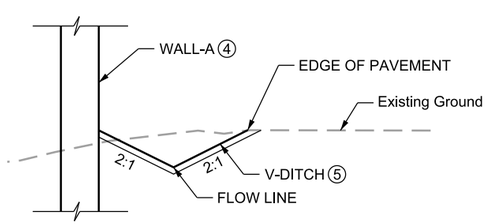

TYPICAL D

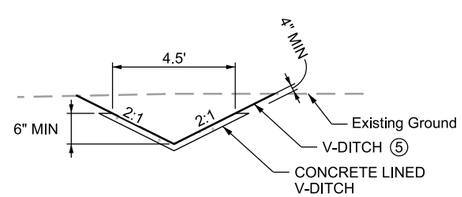

TYPICAL E

ID	TYPICAL SECTION	ALIGNMENT	FROM			TO			AVERAGE SLOPE	LINING	NOTES
			STATION	OFFSET		STATION	OFFSET				
CH 02-300	B	MAINLINE PATH	106+19.00	5.14	LT	107+61.98	35.05	LT	1.00%	CLASS D VEGETATION	
CH 02-300	E	MAINLINE PATH	105+94.03	28.16	RT	106+19.00	5.14	LT	32.63%	CONCRETE	
CH 02-301	B	MAINLINE PATH	107+61.98	35.05	LT	110+43.13	7.21	LT	0.50%	CLASS D VEGETATION	SEE DRDT-06 FOR GRADING TIE-IN DETAILS.
CH 02-302	D	MAINLINE PATH	105+96.02	47.47	RT	109+37.98	42.46	RT	3.33%	CLASS D VEGETATION	
CH 02-304	C	MAINLINE PATH	109+91.68	22.51	RT	110+25.72	19.53	RT	46.27%	CONCRETE	
CH 02-305	C	MAINLINE PATH	107+64.24	10.29	RT	109+91.68	22.51	RT	2.55%	CONCRETE	
CH 02-306	C	MAINLINE PATH	106+84.52	43.38	RT	109+26.46	38.56	RT	1.50%	CONCRETE	
CH 02-307	C	MAINLINE PATH	105+97.13	43.98	RT	106+84.52	43.38	RT	46.77%	CONCRETE	
CH 04-301	A	MAINLINE PATH	116+53.31	17.00	RT	119+37.39	10.50	RT	0.30%	CLASS D VEGETATION	

REV	DATE	DESCRIPTION

Designed By: MSN
Drawn By: DCV
Checked By: NLB
Approved By: ALK

CivilScience Engineers | Surveyors | Solutions

UTA

DITCH DETAILS

LEHI CITY
LEH_OP_1
PED OVERPASS STRUCTURE - UDOT STR NO. F-923
SR-92 & DIGITAL DRIVE

CADD Filename: LEH_OP_1-DRDT-05
UTA Contract No.: 18-2399TP
Drawing: DRDT-05
Sheet No.: 5 OF 6

DGN File:IP_PkPu\03344489\LEH_OP_1-DRDT-05.dgn
03-MAR-2020

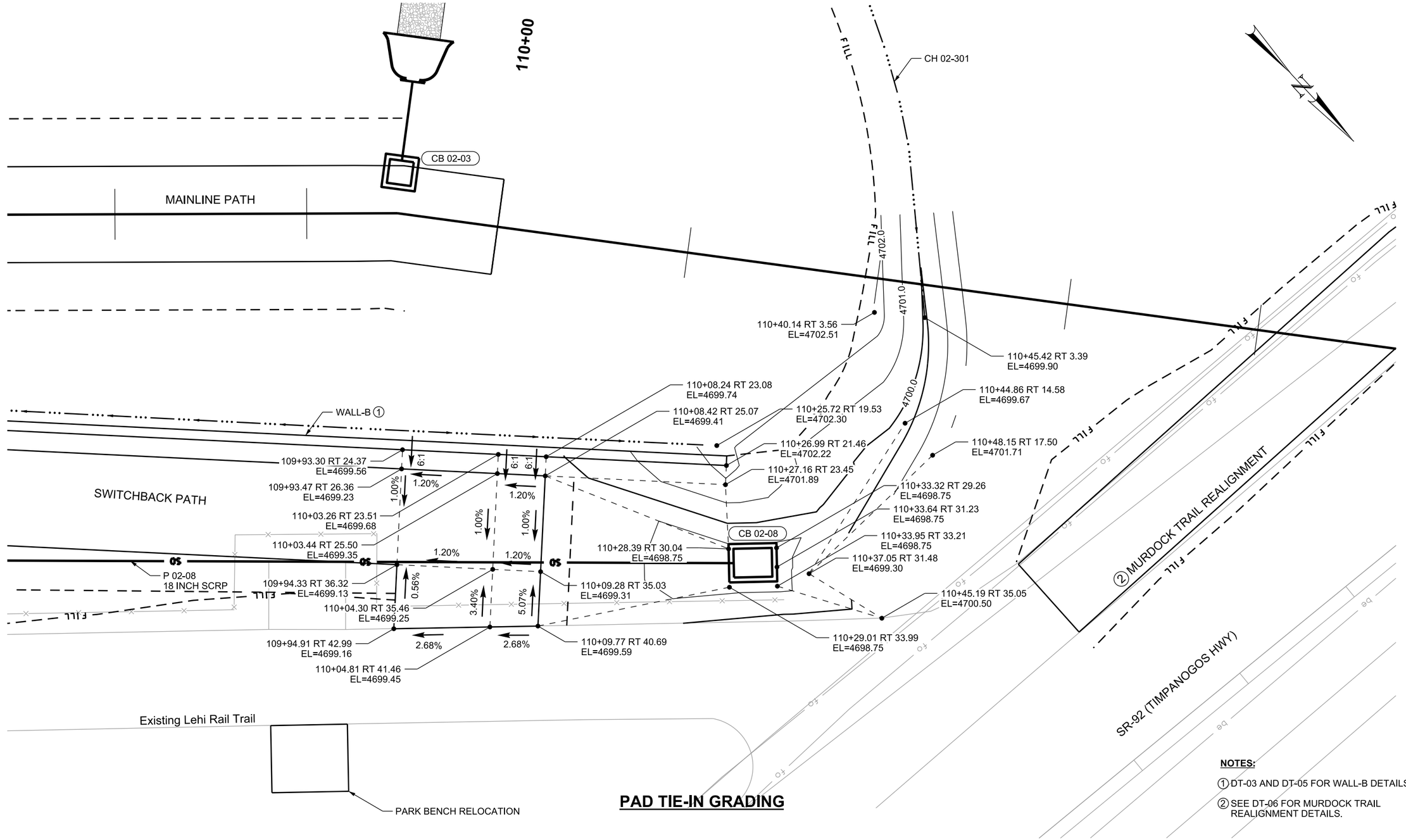

PAD TIE-IN GRADING

NOTES:

1. DT-03 AND DT-05 FOR WALL-B DETAILS.
2. SEE DT-06 FOR MURDOCK TRAIL REALIGNMENT DETAILS.

REV	DATE	DESCRIPTION

Designed By: MSN
Drawn By: DCV
Checked By: NLB
Approved By: ALK

CivilScience Engineers | Surveyors | Solutions

UTA

PAD TIE-IN DETAIL

LEHI CITY
LEH_OP_1
PED OVERPASS STRUCTURE - UDOT STR NO. F-923
SR-92 & DIGITAL DRIVE

CADD Filename: LEH_OP_1-DRDT-06.dgn
UTA Contract No.: 18-2399TP
Drawing: DRDT-06
Sheet No.: 6 OF 6

DGN File: IP PWP:d0344489\LEH_OP_1-DRDT-06.dgn
03-MAR-2020

TEST HOLE INFORMATION			
TEST HOLE	UTILITY	DEPTH	NOTES FROM TEST HOLE SURVEY
1	Fiber Optic	3'-2"	2 CONDUITS OBSERVED.
2	Fiber Optic	3'-2"	TRENCHED UNDERNEATH EXISTING HMA. CONDUITS BELIEVED TO BE IN TH-1
3	Fiber Optic	3'-6"	• 1 X 18"-24" PIPE. •1 X 36" PIPE. •3 X FIBER OPTIC CONDUITS.
4	Fiber Optic	2'-0"	
5	Fiber Optic	2'-1"	
6	Fiber Optic	2'-1"	
7	Fiber Optic	2'-1"	
8	Fiber Optic	8'-6"	
9	Buried Electric	n/a	•SURVEYOR CONFIRMED WITH LEHI CITY THAT NO BURIED ELECTRIC LINE OWNED BY LEHI CITY IS RUNNING EAST/WEST.
10	Telephone	7'-10"	• 3RD CONDUIT OBSERVED WITH THE BTEL AND FIBER.
11	Fiber Optic	7'-10"	
12	Telephone	2'-4"	• 3RD CONDUIT OBSERVED WITH THE BTEL AND FIBER.
13	Fiber Optic	2'-5"	
14	Telephone	6'-4"	• 3RD CONDUIT OBSERVED WITH THE BTEL AND FIBER.
15	Fiber Optic	6'-4"	
16	Fiber Optic	4'-0"	•UTILITIES OBSERVED IN SAME TEST HOLE.
17	Telephone	3'-6"	
18	Fiber Optic	3'-0"	
19	Fiber Optic	6'-8"	
20	Buried Electric	n/a	•LEHI CITY STATED NO BURRIED ELECTRIC HERE. TEST HOLE NOT PERFORMED.
21	Fiber Optic	3'-0"	• FIBER OPTIC LINES OBSERVED 3' FROM BLUESTAKES MARKINGS.
SEE DR SHEETS FOR TEST HOLE LOCATIONS			

UTILITY CONTACT LIST			
UTILITY COMPANY	CONTACT	UTILITY	PHONE
BLUE STAKES		UTILITY NOTIFICATION CENTER	800-662-4111
AMERICAN FORK CITY FIBER	MICAH HUNSAKER	FIBER	801-854-5967
AT&T	ROB WILLIAMSON	FIBER	208-850-7448
COMCAST	JEFF HOUSTON	FIBER & CATV	435-224-2356
CENTURY LINK	JOHN STEWART	FIBER & PHONE	801-505-0906
CENTRACOM	ALISA FATTZ	PHONE & CATV	435-427-3331
DOMINION ENERGY	TYSON ANDERSON	GAS	801-324-3634
LEHI CITY	GARY THOMAS	SEWER & WATER	385-201-1900
LEHI CITY	BRENT THOMAS	POWER	385-201-1040
MCI/VERIZON BUSINESS		FIBER	469-886-4238
UDOT	AUSTIN TRIPP	FIBER & TRAFFIC SIGNALS	801-222-3418
UTOPIA	XIAOTONG WU	FIBER	801-613-3854
VERACITY NETWORKS	DAVE MANSFIELD	FIBER	801-362-0020
ZAYO	SYLVAN STEWART	FIBER	801-708-6065

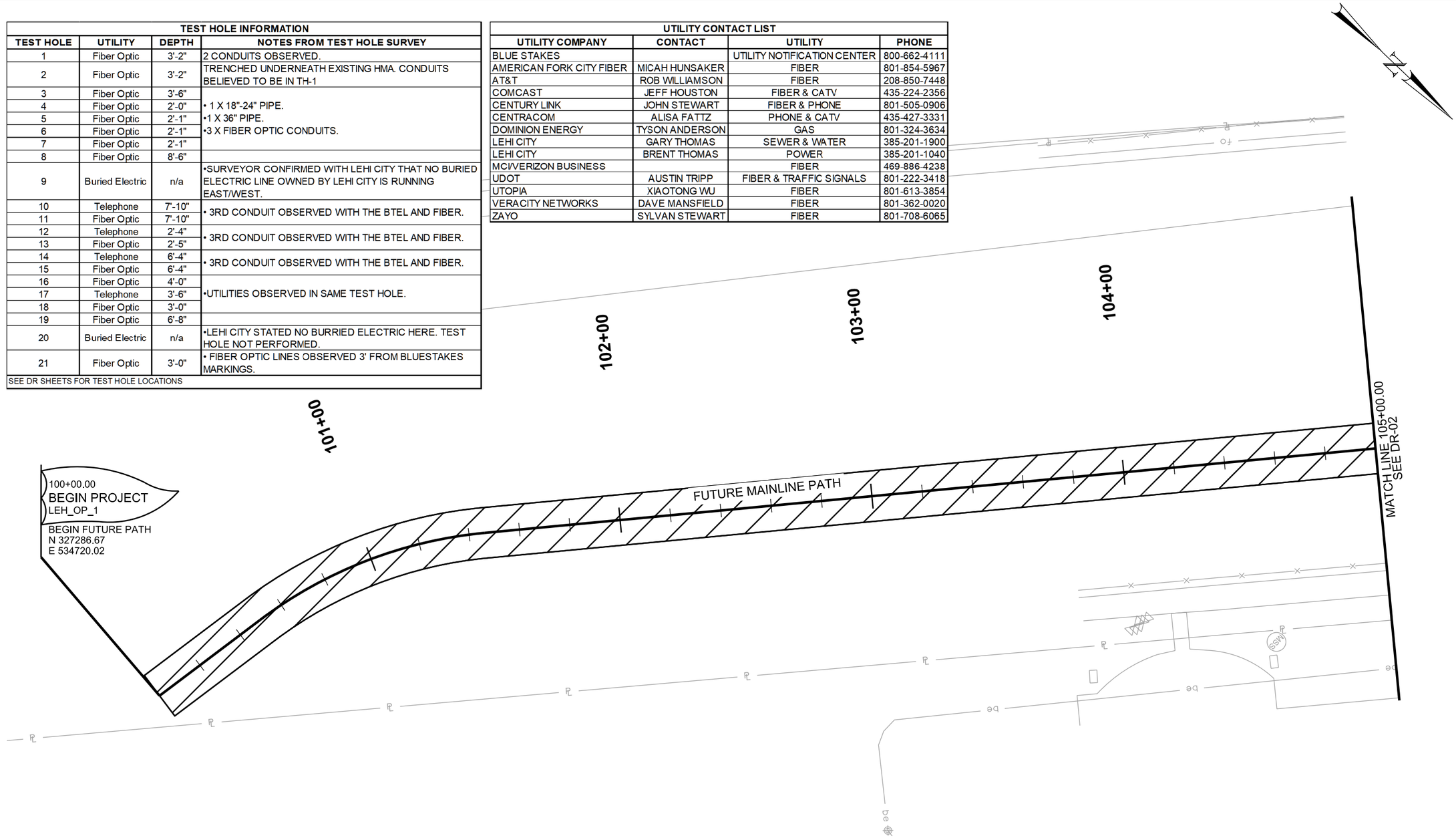

NO WORK THIS SHEET

REV	DATE	DESCRIPTION

Designed By: MSN
Drawn By: DCV
Checked By: NLB
Approved By: ALK

CivilScience Engineers | Surveyors | Solutions

UTA

DRAINAGE

LEHI CITY
LEH_OP_1
PED OVERPASS STRUCTURE - UDOT STR NO. F-923
SR-92 & DIGITAL DRIVE

CADD Filename: LEH_OP_DR-01.dgn
UTA Contract No.: 18-2399TP
Drawing: DR-01
Sheet No.: 1 OF 7

DGN File: IP_PWPcd0344489\LEH_OP_1-DR-01.dgn
03-MAR-2020

CHECK DAM - FIBER ROLL
105+10.08 RT 28.02
105+50.25 RT 32.56
105+78.59 RT 37.79
105+91.31 RT 31.79
106+00.54 RT 19.48
106+09.77 RT 07.17
106+18.89 RT 47.60
106+19.00 LT 05.14
106+45.33 RT 47.67
106+81.26 LT 32.21
107+00.91 RT 46.36
107+38.09 RT 45.44
107+69.60 RT 44.71
107+92.16 RT 44.42
108+09.56 RT 44.28
108+29.35 RT 44.02
108+48.85 RT 43.67
108+69.24 RT 43.25
108+90.20 RT 43.25
109+10.64 LT 50.98
109+11.78 RT 42.82
109+31.95 RT 42.55
110+44.32 LT 01.69

DROP-INLET BARRIER
107+64.24 RT 10.30
109+26.46 RT 38.56
109+89.47 LT 04.63
110+31.09 RT 31.13

SILT FENCE
105+87.27 RT 33.22 TO
106+31.01 LT 25.21 TO
106+47.96 LT 33.76 TO
107+51.89 LT 36.72 TO
109+88.46 LT 62.74 TO
110+23.93 LT 47.48 TO
110+48.22 LT 08.34

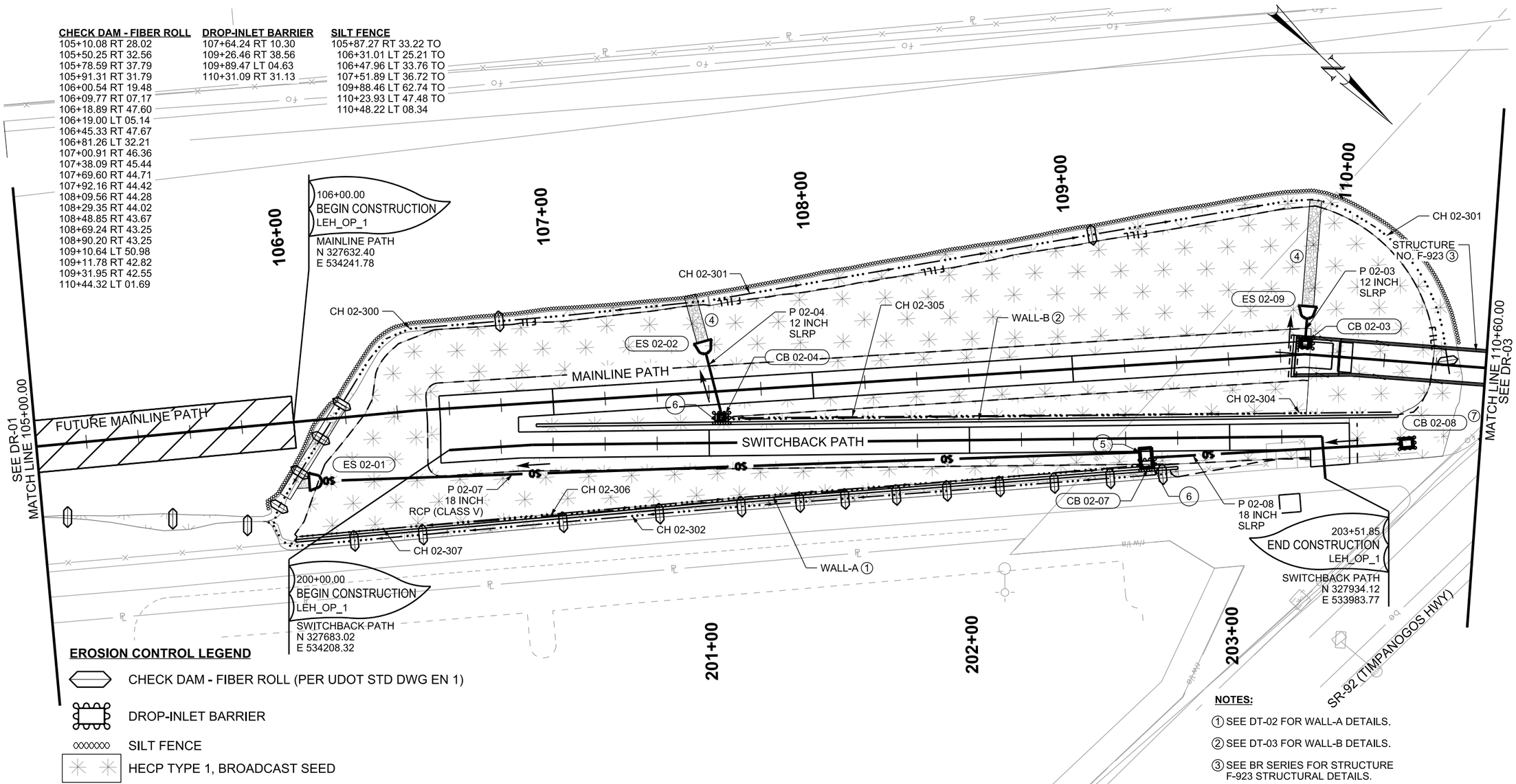

EROSION CONTROL LEGEND

CHECK DAM - FIBER ROLL (PER UDOT STD DWG EN 1)

DROP-INLET BARRIER

SILT FENCE

HECP TYPE 1, BROADCAST SEED

ID	UDOT STD DWG	LINE	ALIGNMENT	STATION	OFFSET	GRATE	NOTES
ES 02-01	-	-	MAINLINE PATH	106+08.47	23.55 LT	-	18 INCH CIRCULAR END SECTION
ES 02-02	-	-	MAINLINE PATH	107+59.73	14.86 LT	-	12 INCH CIRCULAR END SECTION
CB 02-03	SEE BR SERIES FOR INLET INFORMATION						
CB 02-04	DB 1	3	MAINLINE PATH	107+64.16	11.79 RT	GRATE	-
CB 02-07	CB 5	-	SWITCHBACK PATH	202+68.07	11.60 RT	GF 1	-
CB 02-08	CB 5	-	MAINLINE PATH	110+31.09	31.13 RT	GF 1	-
ES 02-09	-	-	MAINLINE PATH	109+89.47	13.82 LT	-	12 INCH CIRCULAR END SECTION

*SEE DR-02A FOR GRATE ELEVATION AND LAYOUT INFORMATION

ID	MATERIAL	FROM		TO		REMARKS
		STATION	OFFSET	STATION	OFFSET	
P 02-03	SLRP	109+89.47	5.50 LT	109+89.47	13.82 LT	-
P 02-04	SLRP	107+64.29	9.29 RT	107+59.73	14.86 LT	-
P 02-07	RCP	109+24.00	33.60 RT	106+08.47	23.55 RT	STRUCTURAL CLASS V
P 02-08	SLRP	110+29.11	31.44 RT	109+28.03	35.92 RT	-

NOTES:

① SEE DT-02 FOR WALL-A DETAILS.

② SEE DT-03 FOR WALL-B DETAILS.

③ SEE BR SERIES FOR STRUCTURE F-923 STRUCTURAL DETAILS.

④ SEE DRDT-03 FOR RIPRAP DETAILS.

⑤ INSTALL P 02-07 OFFSET WITHIN CB 02-07 AS SHOWN. PROVIDE 2 INCHES BETWEEN OUTSIDE OF PIPE AND INSIDE WALL OF CATCH BASIN PER UDOT STD DWG CB 5.

⑥ PROVIDE 2 INCHES RIGID PLASTIC FOAM BETWEEN INSIDE FACE OF WALL AND CATCH BASIN. SEE LAYOUT C ON DRDT-02.

⑦ SEE DRDT-06 FOR PAD TIE-IN GRADING DETAILS.

REV	DATE	DESCRIPTION

Designed By: MSN
Drawn By: DCV
Checked By: NLB
Approved By: ALK

CivilScience Engineers | Surveyors | Solutions

UTA

DRAINAGE

LEHI CITY
LEH_OP_1
PED OVERPASS STRUCTURE - UDOT STR NO. F-923
SR-92 & DIGITAL DRIVE

CADD Filename: LEH_OP_1-DR-02.dgn
UTA Contract No.: 18-2399TP
Drawing: DR-02
Sheet No.: 2 OF 7

DGN File: JP_PWPw8344489\LEH_OP_1-DR-02.dgn
03-MAR-2020

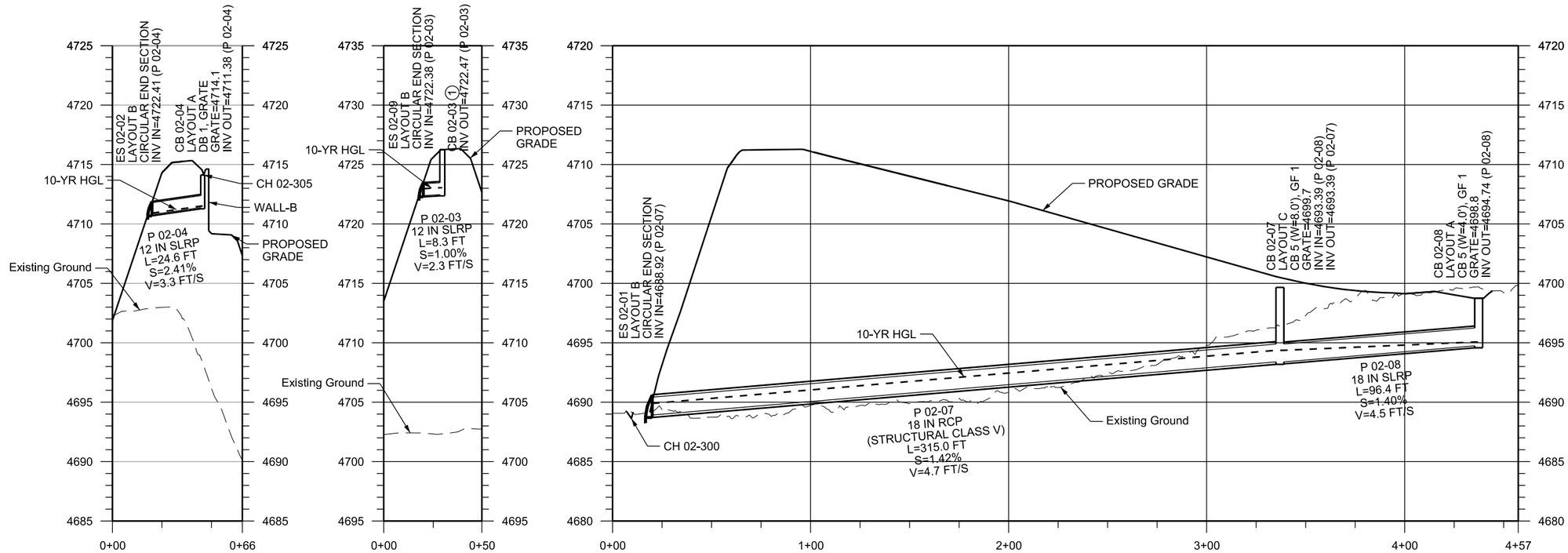

ES 02-02 TO CB 02-04

ES 02-09 TO CB 02-03

ES 02-01 TO CB 02-08

NOTES:

(1) SEE BR SERIES FOR INLET DETAILS.

REV	DATE	DESCRIPTION

Designed By: MSN
Drawn By: DCV
Checked By: NLB
Approved By: ALK

CivilScience Engineers | Surveyors | Solutions

UTA

DRAINAGE PROFILE

LEHI CITY
LEH_OP_1
PED OVERPASS STRUCTURE - UDOT STR NO. F-923
SR-92 & DIGITAL DRIVE

CADD Filename: LEH_OP_1-DR-02A.dgn
UTA Contract No.: 18-2399TP
Drawing: DR-02A
Sheet No.: 3 OF 7

DGN File: IP PWPrjd0344489\LEH_OP_1-DR-02A.dgn
03-MAR-2020

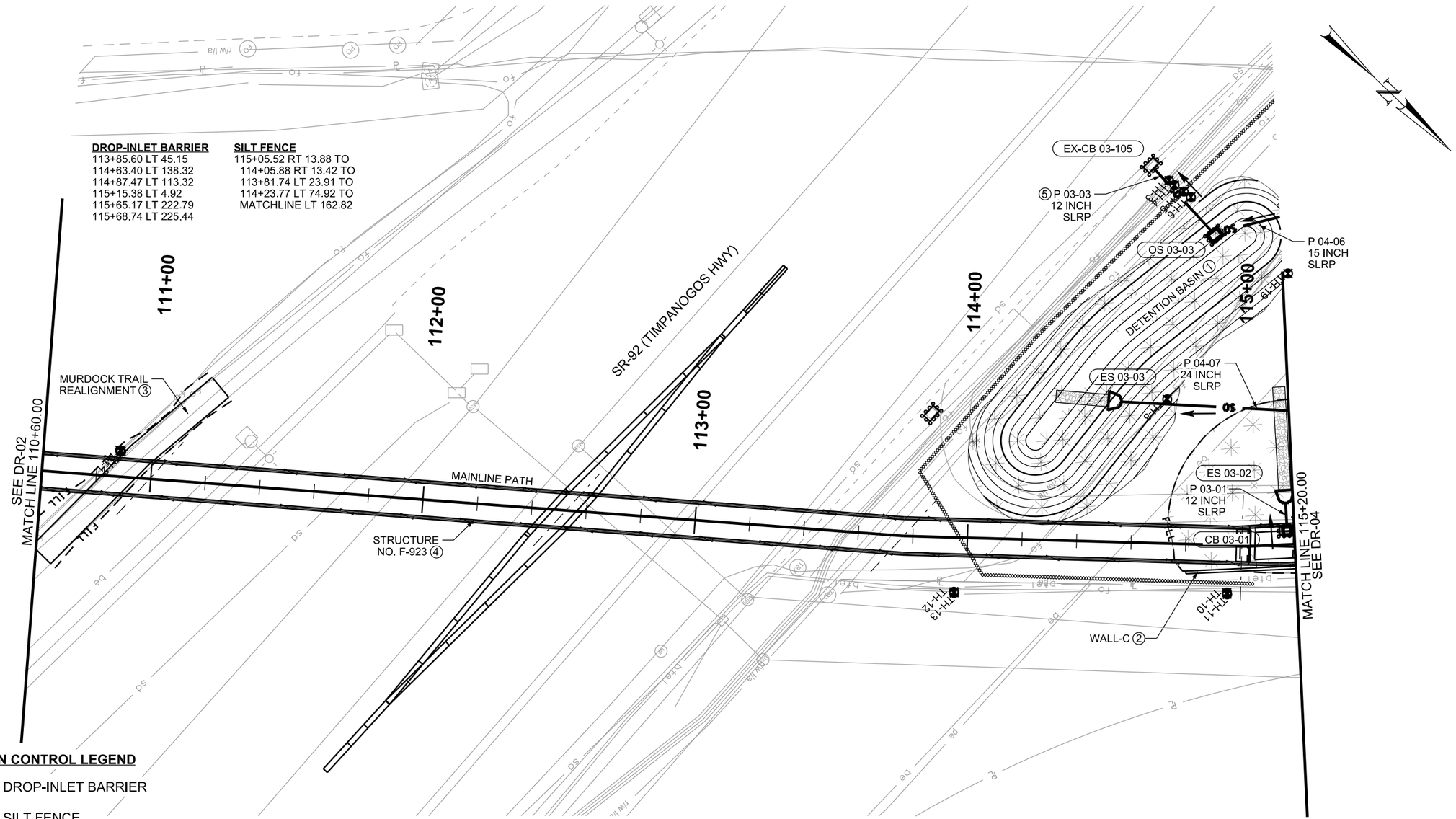

EROSION CONTROL LEGEND

DROP-INLET BARRIER

SILT FENCE

HECP TYPE 1, BROADCAST SEED

ID	UDOT STD DWG	LINE	ALIGNMENT	STATION	OFFSET	GRATE	NOTES
CB 03-01	SEE BR SERIES FOR INLET INFORMATION						
ES 03-02	-	-	MAINLINE PATH	115+17.28	15.25 LT	-	12 INCH CIRCULAR END SECTION
ES 03-03	-	-	MAINLINE PATH	114+54.93	51.40 LT	-	24 INCH CIRCULAR END SECTION
OS 03-03	CB 5	-	MAINLINE PATH	114+87.47	113.32 LT	GF 1	-
*SEE DR-03A FOR GRATE ELEVATION AND LAYOUT INFORMATION							

ID	MATERIAL	FROM		TO		REMARKS
		STATION	OFFSET	STATION	OFFSET	
P 03-01	SLRP	115+17.40	6.23 LT	115+17.28	15.25 LT	-
P 03-03	SLRP	114+86.50	114.47 LT	114+64.74	136.85 LT	-

NOTES:

① SEE DRDT-04 FOR DETENTION BASIN GRADING DETAILS.

② SEE DT-04 FOR WALL-C DETAILS.

③ SEE DT-06 FOR MURDOCK TRAIL REALIGNMENT DETAILS.

④ SEE BR SERIES FOR STRUCTURE F-923 STRUCTURAL DETAILS.

⑤ CONNECT PROPOSED PIPE TO EXISTING STRUCTURE. CORE AND GROUT WATER TIGHT CONNECTION. SEE DRDT-02 FOR CONNECTION DETAIL.

REV	DATE	DESCRIPTION

Designed By: MSN
Drawn By: DCV
Checked By: NLB
Approved By: ALK

CivilScience Engineers | Surveyors | Solutions

UTA

DRAINAGE

LEHI CITY
LEH_OP_1
PED OVERPASS STRUCTURE - UDOT STR NO. F-923
SR-92 & DIGITAL DRIVE

CADD Filename: LEH_OP_1-DR-03.dgn
UTA Contract No.: 18-2399TP
Drawing: DR-03
Sheet No.: 4 OF 7

DGN File: P:\Proj\0344489\LEH_OP_1-DR-03.dgn
03-MAR-2020

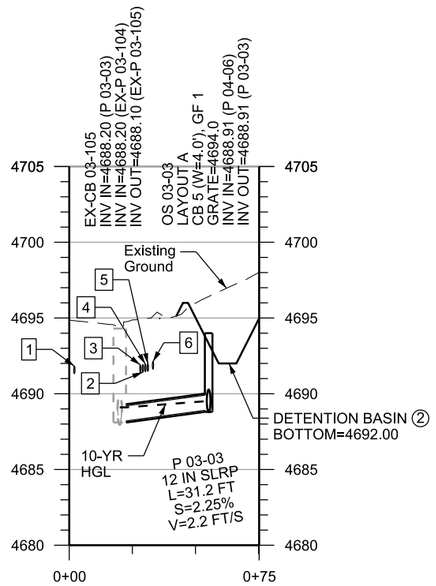

EX-CB 03-105 TO OS 03-03

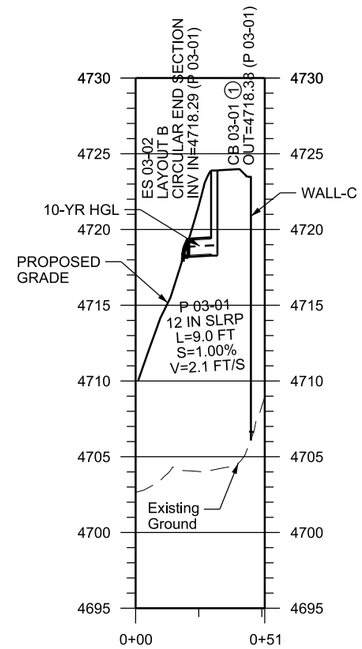

ES 03-02 TO CB 03-01

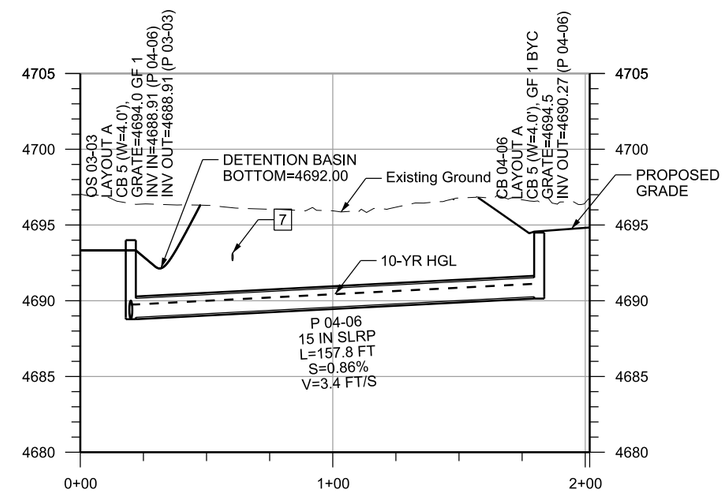

OS 03-03 TO CB 04-06

No.	UTILITY	OWNER	SIZE	COMMENT
1	Fiber Optic	CENTURY LINK	unk	PROTECT IN PLACE
2	Fiber Optic	UDOT	72 ct	PROTECT IN PLACE
3	Fiber Optic	UTOPIA	24 ct	PROTECT IN PLACE
4	Fiber Optic	XO	144 ct	PROTECT IN PLACE
5	Fiber Optic	CENTRACOM	72 ct	PROTECT IN PLACE
6	Fiber Optic	CENTURY LINK	unk	PROTECT IN PLACE
7	Fiber Optic	ELECTRIC LIGHTWAVE	96 ct	PROTECT IN PLACE

NOTES:

① SEE BR SERIES FOR INLET DETAILS.

② SEE DRDT-04 FOR DETENTION BASIN GRADING DETAILS.

REV	DATE	DESCRIPTION

Designed By: MSN
Drawn By: DCV
Checked By: NLB
Approved By: ALK

CivilScience Engineers | Surveyors | Solutions

UTA

DRAINAGE PROFILE

LEHI CITY
LEH_OP_1
PED OVERPASS STRUCTURE - UDOT STR NO. F-923
SR-92 & DIGITAL DRIVE

CADD Filename: LEH_OP_1-DR-03A.dgn
UTA Contract No.: 18-2399TP
Drawing: DR-03A
Sheet No.: 5 OF 7

DGN File: P:\Proj\2344489\LEH_OP_1-DR-03A.dgn
03-MAR-2020

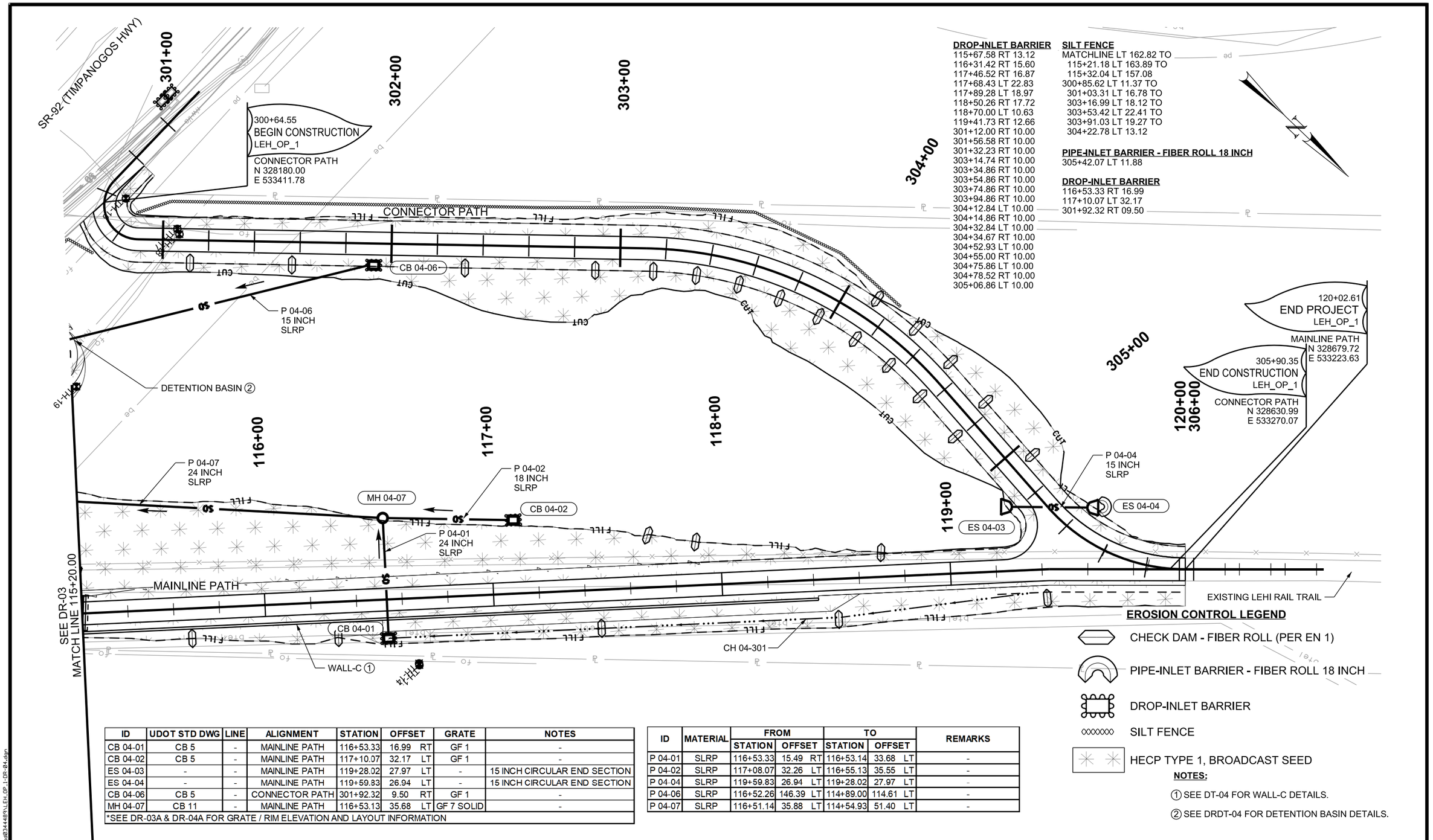

DROP-INLET BARRIER
115+67.58 RT 13.12
116+31.42 RT 15.60
117+46.52 RT 16.87
117+68.43 LT 22.83
117+89.28 LT 18.97
118+50.26 RT 17.72
118+70.00 LT 10.63
119+41.73 RT 12.66
301+12.00 RT 10.00
301+56.58 RT 10.00
301+32.23 RT 10.00
303+14.74 RT 10.00
303+34.86 RT 10.00
303+54.86 RT 10.00
303+74.86 RT 10.00
303+94.86 RT 10.00
304+12.84 LT 10.00
304+14.86 RT 10.00
304+32.84 LT 10.00
304+34.67 RT 10.00
304+52.93 LT 10.00
304+55.00 RT 10.00
304+75.86 LT 10.00
304+78.52 RT 10.00
305+06.86 LT 10.00

SILT FENCE
MATCHLINE LT 162.82 TO
115+21.18 LT 163.89 TO
115+32.04 LT 157.08
300+85.62 LT 11.37 TO
301+03.31 LT 16.78 TO
303+16.99 LT 18.12 TO
303+53.42 LT 22.41 TO
303+91.03 LT 19.27 TO
304+22.78 LT 13.12

PIPE-INLET BARRIER - FIBER ROLL 18 INCH
305+42.07 LT 11.88

DROP-INLET BARRIER
116+53.33 RT 16.99
117+10.07 LT 32.17
301+92.32 RT 09.50

ID	UDOT STD DWG	LINE	ALIGNMENT	STATION	OFFSET	GRATE	NOTES
CB 04-01	CB 5	-	MAINLINE PATH	116+53.33	16.99 RT	GF 1	-
CB 04-02	CB 5	-	MAINLINE PATH	117+10.07	32.17 LT	GF 1	-
ES 04-03	-	-	MAINLINE PATH	119+28.02	27.97 LT	-	15 INCH CIRCULAR END SECTION
ES 04-04	-	-	MAINLINE PATH	119+59.83	26.94 LT	-	15 INCH CIRCULAR END SECTION
CB 04-06	CB 5	-	CONNECTOR PATH	301+92.32	9.50 RT	GF 1	-
MH 04-07	CB 11	-	MAINLINE PATH	116+53.13	35.68 LT	GF 7 SOLID	-

*SEE DR-03A & DR-04A FOR GRATE / RIM ELEVATION AND LAYOUT INFORMATION

ID	MATERIAL	FROM		TO		REMARKS
		STATION	OFFSET	STATION	OFFSET	
P 04-01	SLRP	116+53.33	15.49 RT	116+53.14	33.68 LT	-
P 04-02	SLRP	117+08.07	32.26 LT	116+55.13	35.55 LT	-
P 04-04	SLRP	119+59.83	26.94 LT	119+28.02	27.97 LT	-
P 04-06	SLRP	116+52.26	146.39 LT	114+89.00	114.61 LT	-
P 04-07	SLRP	116+51.14	35.88 LT	114+54.93	51.40 LT	-

NOTES:

① SEE DT-04 FOR WALL-C DETAILS.

② SEE DRDT-04 FOR DETENTION BASIN DETAILS.

REV	DATE	DESCRIPTION

Designed By: MSN
Drawn By: DCV
Checked By: NLB
Approved By: ALK

CivilScience Engineers | Surveyors | Solutions

UTA

DRAINAGE

LEHI CITY
LEH_OP_1
PED OVERPASS STRUCTURE - UDOT STR NO. F-923
SR-92 & DIGITAL DRIVE

CADD Filename: LEH_OP_1-DR-04.dgn
UTA Contract No.: 18-2399TP
Drawing: DR-04
Sheet No.: 6 OF 7

DGN: Files\P PWP:d0344489\LEH_OP_1-DR-04.dgn
03-MAR-2026

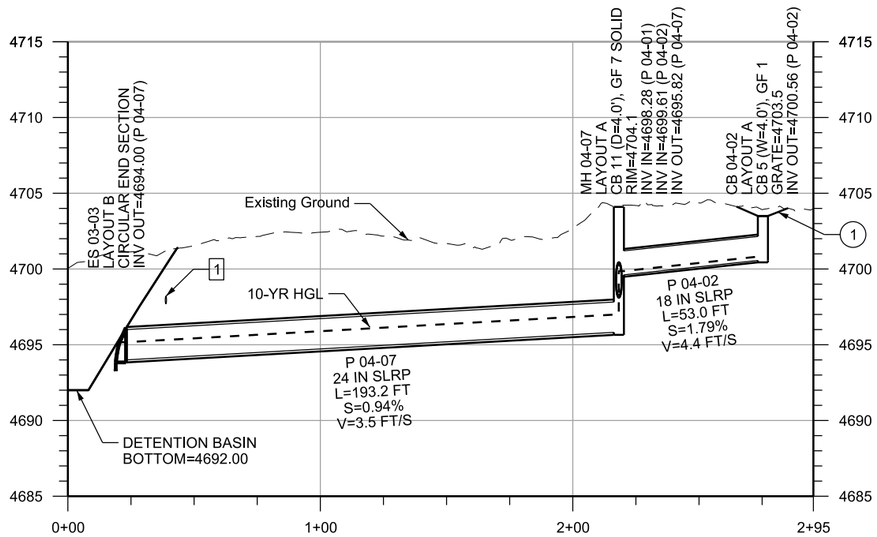

ES 03-03 TO CB 04-02

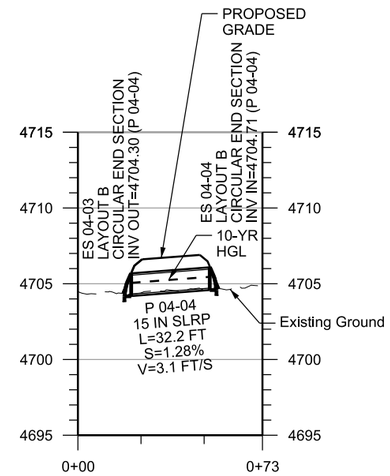

ES 04-03 TO ES 04-04

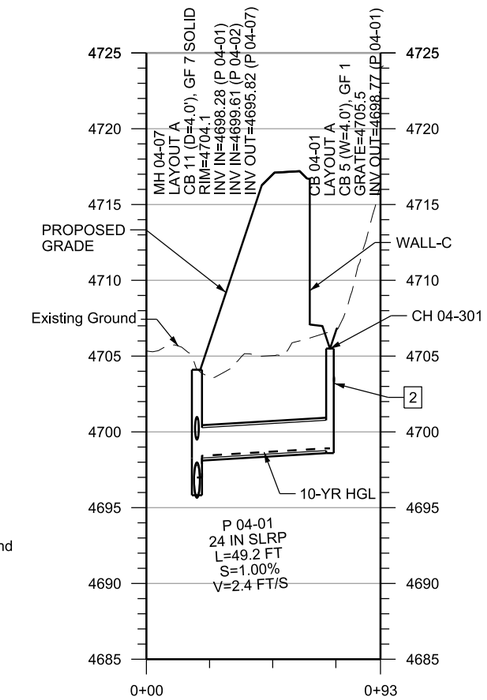

MH 04-07 TO CB 04-01

No.	UTILITY	OWNER	SIZE	COMMENT
1	Fiber Optic	ELECTRIC LIGHTWAVE	96 ct	PROTECT IN PLACE

NOTES:

1. GRADE TO DRAIN WHEN BACKFILLING AROUND INLET.

REV	DATE	DESCRIPTION

Designed By: MSN
Drawn By: DCV
Checked By: NLB
Approved By: ALK

CivilScience Engineers | Surveyors | Solutions

UTA

DRAINAGE PROFILE

LEHI CITY
LEH_OP_1
PED OVERPASS STRUCTURE - UDOT STR NO. F-923
SR-92 & DIGITAL DRIVE

CADD Filename: LEH_OP_1-DR-04A.dgn
UTA Contract No.: 18-2399TP
Drawing: DR-04A
Sheet No.: 7 OF 7

DGN File: IP_PWPrd@344489\LEH_OP_1-DR-04A.dgn
03-MAR-2026

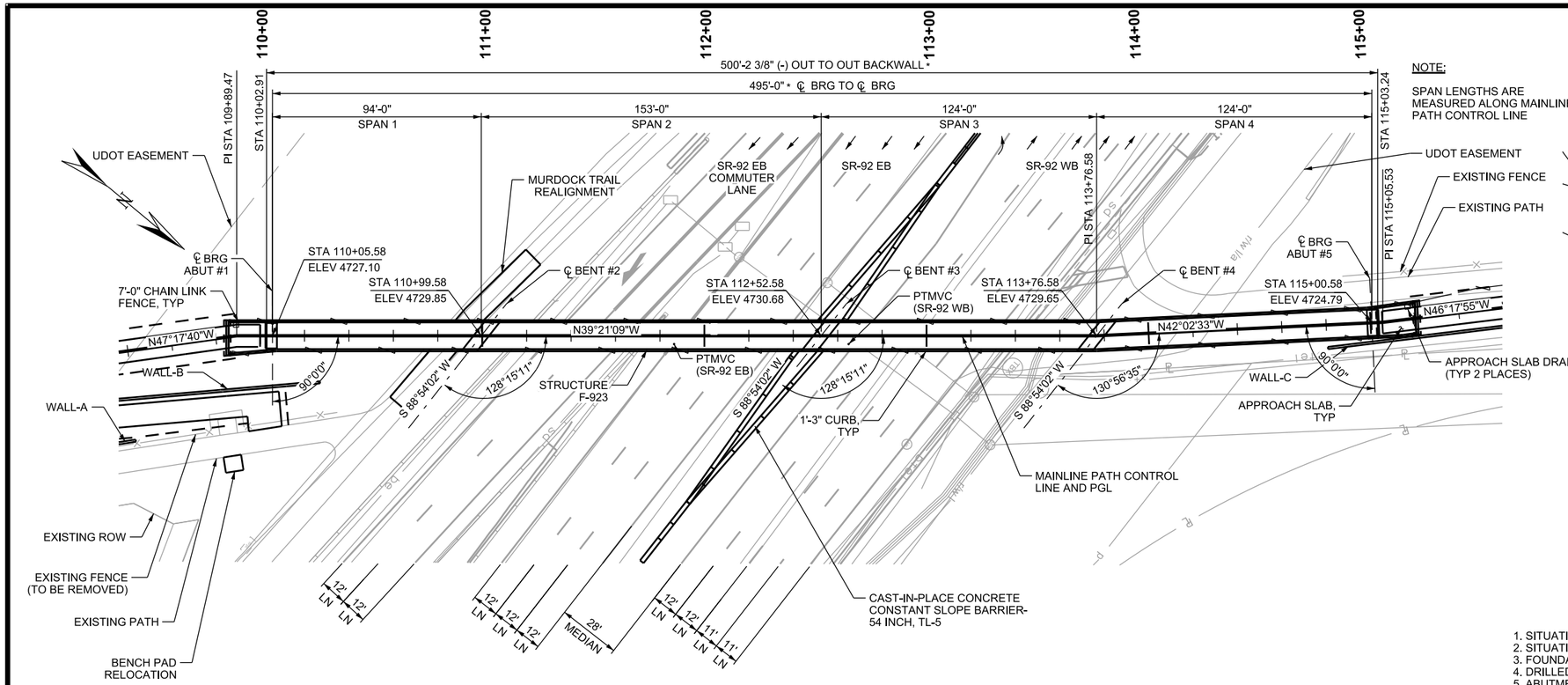

NOTE:

SPAN LENGTHS ARE MEASURED ALONG MAINLINE PATH CONTROL LINE

PLAN

SEE FOUNDATION PLAN FOR UTILITIES INFORMATION

GENERAL NOTES

SEE "SITUATION & LAYOUT 2 OF 2"

DESIGN DATA

SEE "SITUATION & LAYOUT 2 OF 2"

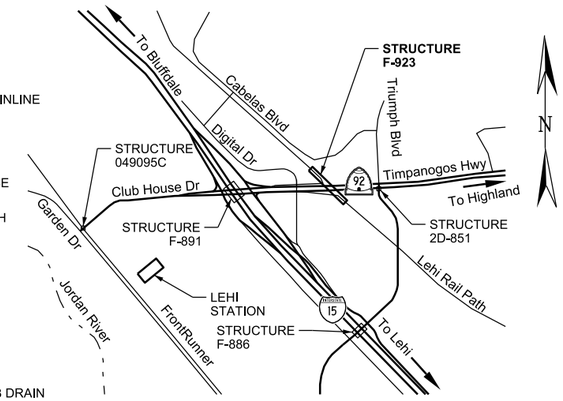

LOCATION PLAN

INDEX OF SHEETS

1. SITUATION & LAYOUT 1 OF 2
2. SITUATION & LAYOUT 2 OF 2
3. FOUNDATION PLAN
4. DRILLED SHAFT DETAILS
5. ABUTMENT PLAN AND ELEVATION
6. ABUTMENT DETAILS
7. WINGWALL DETAILS
8. BENT PLAN AND ELEVATION
9. BENT DETAILS
10. FRAMING PLAN 1 OF 2
11. FRAMING PLAN 2 OF 2
12. UBT74 GIRDER DETAILS 1 OF 2
13. UBT74 GIRDER DETAILS 2 OF 2
14. BEARING PAD AND GRAFFITI PLATE DETAILS
15. INTERMEDIATE DIAPHRAGM DETAILS
16. DECK PLAN 1 OF 2
17. DECK PLAN 2 OF 2
18. DECK SECTION
19. ABUTMENT DIAPHRAGM DETAILS
20. ABUTMENT EXPANSION BEARING
21. APPROACH SLAB PLAN
22. APPROACH SLAB DETAILS
23. APPROACH SLAB DRAIN DETAILS
24. BENT DIAPHRAGM DETAILS 1 OF 2
25. BENT DIAPHRAGM DETAILS 2 OF 2
26. SCREED ELEVATIONS 1 OF 2
27. SCREED ELEVATIONS 2 OF 2
28. FENCING DETAILS
29. AESTHETIC DETAILS
30. REINFORCING SCHEDULE 1 OF 2
31. REINFORCING SCHEDULE 2 OF 2

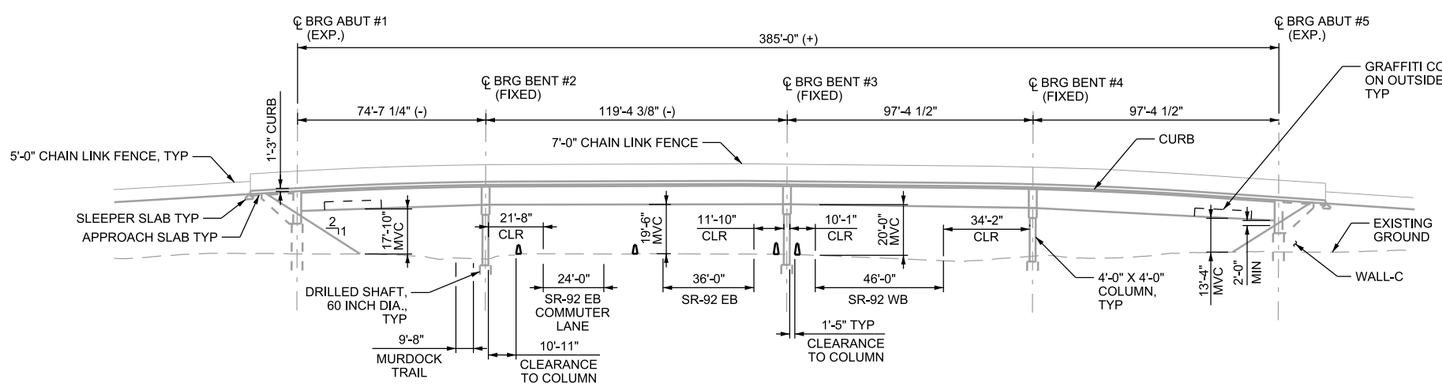

ELEVATION

NORMAL TO ℄ BENT #3 AND SR-92

QUANTITIES			
ITEM	EST QTY	UNIT	AS CONST
GRANULAR BACKFILL BORROW (PLAN QUANTITY)	50	CU YD	
DRILLED SHAFTS, 60 INCH	188	FT	
7 FT CHAIN LINK FENCE	1,069	FT	
REINFORCING STEEL - COATED (PLAN QUANTITY)	113,569	LB	
STRUCTURAL CONCRETE (EST LUMP QTY 453 CU YD)	1	LUMP	
AESTHETICS - FORMLINER	1	LUMP	
PRESTRESSED CONCRETE MEMBER 91 FT 0 INCH TYPE UBT74	1	EACH	
PRESTRESSED CONCRETE MEMBER 96 FT 11 INCH TYPE UBT74	1	EACH	
PRESTRESSED CONCRETE MEMBER 120 FT 7 INCH TYPE UBT74	1	EACH	
PRESTRESSED CONCRETE MEMBER 122 FT 4 INCH TYPE UBT74	2	EACH	
PRESTRESSED CONCRETE MEMBER 127 FT 1 INCH TYPE UBT74	1	EACH	
PRESTRESSED CONCRETE MEMBER 151 FT 4 INCH TYPE UBT74	2	EACH	
STRUCTURAL STEEL (EST LUMP QTY 1,508 LB)	1	LUMP	
ABUTMENT EXPANSION BEARING	4	EACH	
BENT FIXED BEARING	12	EACH	
COMPRESSION JOINT SEAL	32	FT	
AESTHETICS - TINTED CONCRETE SEALER	1	LUMP	

REV	DATE	DESCRIPTION

Designed By: KGJ
Drawn By: DCV
Checked By: AFY
Approved By: ALK

CivilScience Engineers | Surveyors | Solutions

UTA

SITUATION & LAYOUT 1 OF 2

LEHI CITY
LEH_OP_1
PED OVERPASS STRUCTURE - UDOT STR NO. F-923
SR-92 & DIGITAL DRIVE

CADD Filename: LEH_OP_1-BR-01.dgn
UTA Contract No.: 18-2399TP
Drawing: BR-01
Sheet No.: 1 OF 31

DGN File: JP_PWPcd0344489\LEH_OP_1-BR-01.dgn
03-MAR-2020

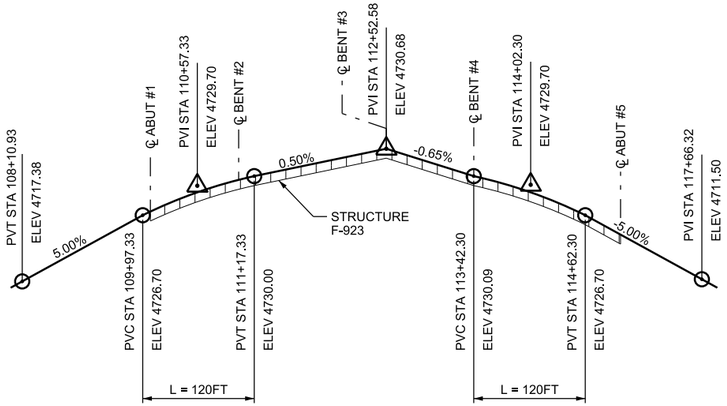

MAINLINE PATH PROFILE

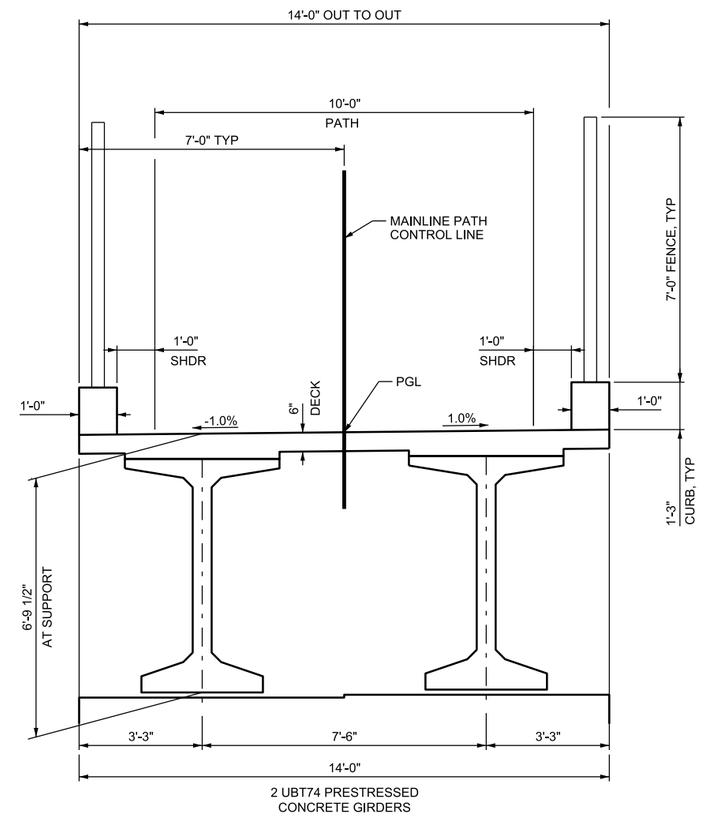

SECTION THROUGH STRUCTURE

LOOKING AHEAD STATION

GENERAL NOTES

1. USE COATED DEFORMED CARBON STEEL BARS CONFORMING TO AASHTO M111 OR ASTM A775 AND AASHTO M31 GRADE 60, UNLESS SHOWN OTHERWISE.
2. USE COATED DEFORMED CARBON STEEL BARS CONFORMING TO ASTM A706 GRADE 60 IN CONCRETE COLUMNS.
3. USE STRUCTURAL STEEL CONFORMING TO AASHTO M270 GRADE 36, UNLESS SHOWN OTHERWISE.
4. CHAMFER ALL EXPOSED CONCRETE CORNERS 3/4 INCH EXCEPT WHERE SHOWN OTHERWISE.
5. PROVIDE 2 INCH MINIMUM CONCRETE COVER TO REINFORCING STEEL UNLESS SHOWN OTHERWISE.
6. VERIFY UTILITY LOCATIONS BEFORE CONSTRUCTION. PROTECT EXISTING UTILITIES IN PLACE UNLESS SHOWN OTHERWISE.
7. COAT OR GALVANIZE ALL MISCELLANEOUS STEEL PLACED IN STRUCTURAL CONCRETE, UNLESS SHOWN OTHERWISE.
8. DO NOT SCALE DRAWINGS. HORIZONTAL DIMENSIONS ARE PLAN. VERTICAL DIMENSIONS ARE PLUMB.

DESIGN DATA

LOADING IN ACCORDANCE WITH AASHTO LRFD GUIDE SPECIFICATIONS FOR THE DESIGN OF PEDESTRIAN BRIDGES, 2009; WITH 2015 INTERIMS AND AASHTO LRFD BRIDGE DESIGN SPECIFICATIONS, 8TH EDITION 2017, AND THE 2017 UDOT STRUCTURE DESIGN AND DETAILING MANUAL. SEISMIC DESIGN IN ACCORDANCE WITH AASHTO GUIDE SPECIFICATIONS FOR LRFD SEISMIC BRIDGE DESIGN, 2ND EDITION 2010 WITH 2012 INTERIM REVISIONS.

STRUCTURAL CONCRETE

ALL LOCATIONS UNLESS SHOWN OTHERWISE	145 PCF	f'c = 4.0 KSI		n = 8 CLASS AA(AE)
PRESTRESSED CONCRETE	145 PCF	f'c = 8.5 KSI	f'cI = 6.5 KSI	n = 5 CLASS AA(PS)
DRILLED SHAFTS	145 PCF	f'c = 4.0 KSI		n = 8 CLASS AA(AE)

CONCRETE WEIGHT FOR LOADS 150 PCF UNLESS SHOWN OTHERWISE

REINFORCING STEEL
ALL LOCATIONS UNLESS INDICATED OTHERWISE fy = 60 KSI

PRESTRESSED STRAND: 0.600" DIA GRADE 270 LOW RELAXATION STRAND (GIRDER)

STRUCTURAL STEEL: Fy = 36 KSI (GRADE 36) UNLESS SHOWN OTHERWISE

SEISMIC: 7% PROBABILITY OF EXCEEDANCE IN 75 YR DESIGN EVENT
PGA=0.30g, Ss = 0.69g, S1 = 0.20g
As= 0.36g, SDs = 0.86g, SD1 = 0.40g
SITE CLASS D, SDC C
BRIDGE CLASSIFICATION - NORMAL (LIFE SAFETY)

REV	DATE	DESCRIPTION

Designed By: KGJ
Drawn By: DCV
Checked By: AFY
Approved By: ALK

CivilScience Engineers | Surveyors | Solutions

UTA

SITUATION & LAYOUT 2 OF 2

LEHI CITY
LEH_OP_1
PED OVERPASS STRUCTURE - UDOT STR NO. F-923
SR-92 & DIGITAL DRIVE

CADD Filename: LEH_OP_1-BR-02.dgn
UTA Contract No.: 18-2399TP
Drawing: BR-02
Sheet No.: 2 OF 31

DGN File:IP-PWPu0344489\LEH_OP_1-BR-02.dgn
03-MAR-2020

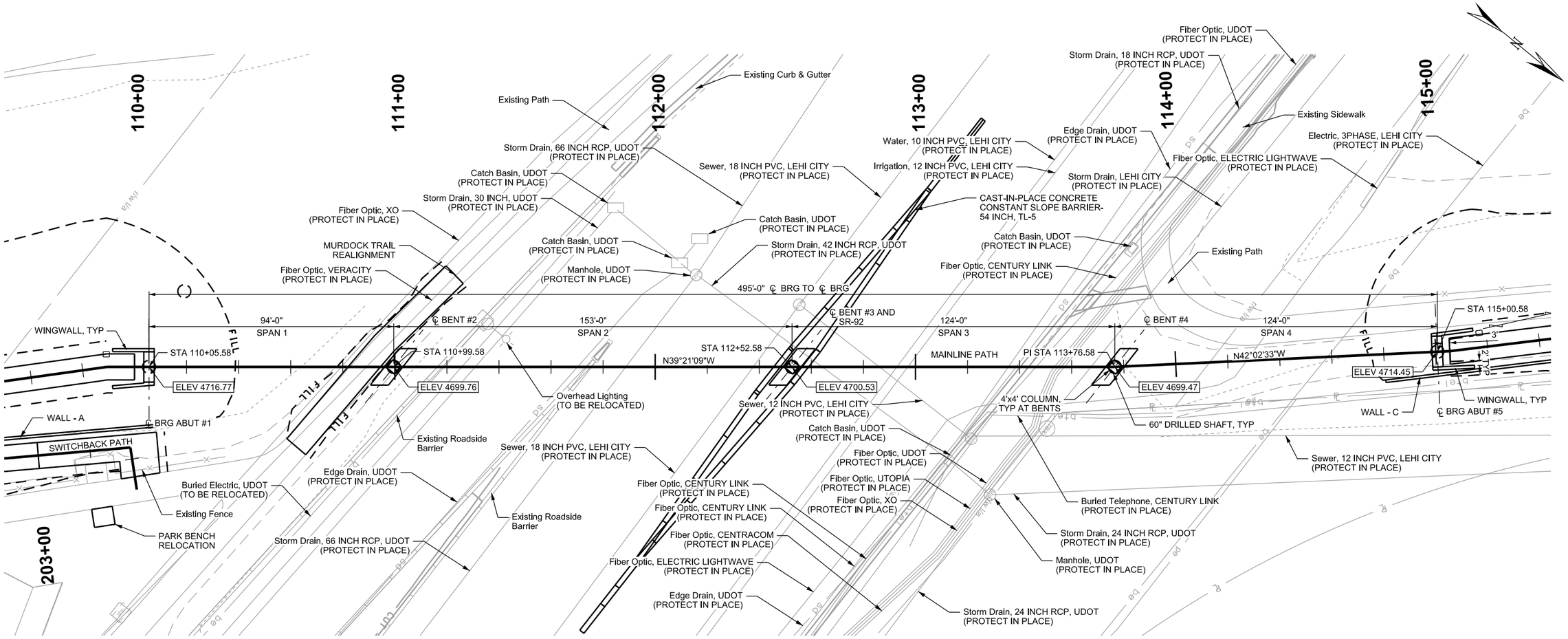

FOUNDATION PLAN

QUANTITIES			
ITEM	LOCATION	EST QTY	UNIT
GRANULAR BACKFILL BORROW	ABUT #1	25	CU YD
GRANULAR BACKFILL BORROW	ABUT #5	25	CU YD

NOTES:

1. ELEVATIONS AT THE TOP OF THE DRILLED SHAFT ARE SHOWN ENCLOSED IN RECTANGLES. FOR EXAMPLE. ELEV XXXX.XX
2. SEE "DRILLED SHAFT DETAILS" FOR DRILLED SHAFT DETAILS.
3. GRANULAR BACKFILL BORROW EXTENDS FROM THE BOTTOM OF THE ABUTMENT AND WINGWALL TO THE APPROACH SLAB.

REV	DATE	DESCRIPTION

Designed By: TGG
Drawn By: DCV
Checked By: AFY
Approved By: ALK

CivilScience Engineers | Surveyors | Solutions

UTA

FOUNDATION PLAN

LEHI CITY
LEH_OP_1
PED OVERPASS STRUCTURE - UDOT STR NO. F-923
SR-92 & DIGITAL DRIVE

CADD Filename: LEH OP 1-BR-03
UTA Contract No.: 18-2399TP
Drawing: BR-03
Sheet No.: 3 OF 31

DGN File: IP PWPrd0344489\LEH_OP_1-BR-03.dgn
03-MAR-2020

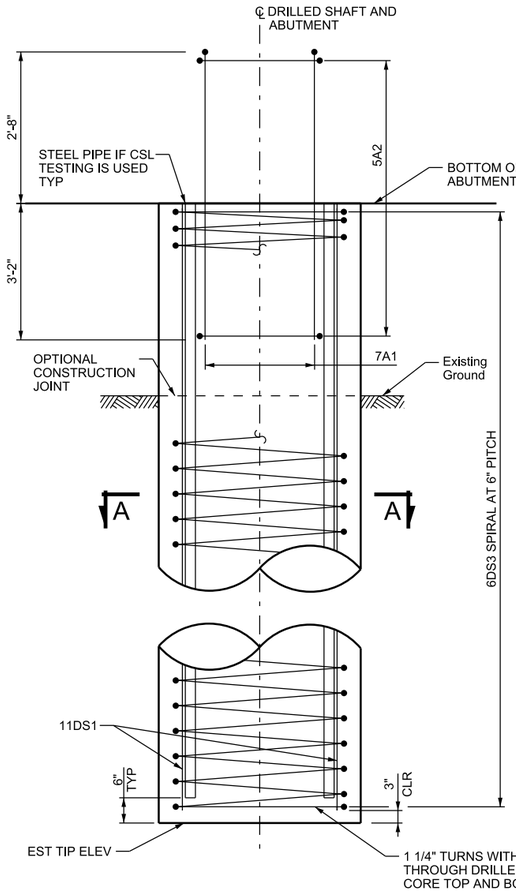

DRILLED SHAFT DETAIL

AT ABUTMENTS

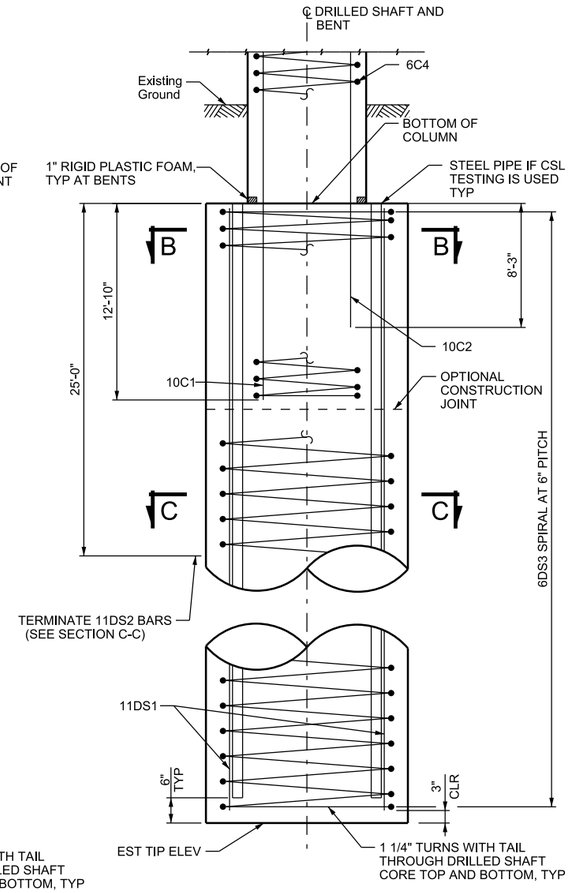

DRILLED SHAFT DETAIL

AT BENTS

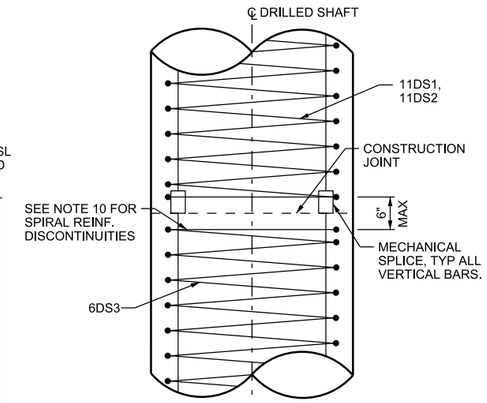

CONSTRUCTION JOINT DETAIL

CSL PIPES NOT SHOWN

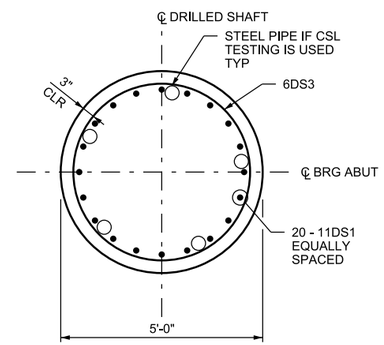

SECTION A-A

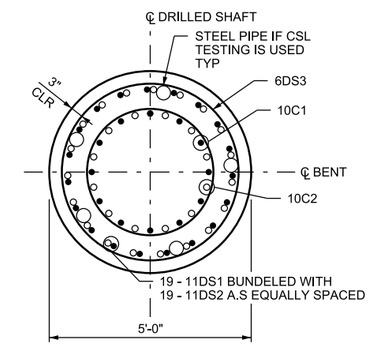

SECTION B-B

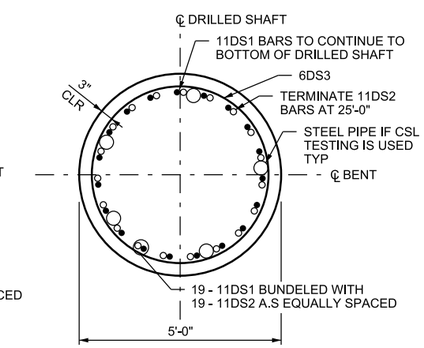

SECTION C-C

NOTES

1. ESTIMATED DRILLED SHAFT TIP ELEVATIONS SHOWN ARE APPROXIMATE. VERIFY TIP ELEVATIONS AT TIME OF CONSTRUCTION. REMOVE ALL LOOSE MATERIAL AT BOTTOM OF EXCAVATION PRIOR TO PLACING REINFORCEMENT OR CONCRETE.
2. REINFORCING STEEL AND CONCRETE FOR DRILLED SHAFT IS INCLUDED IN CONTRACT PRICE FOR DRILLED SHAFT. REINFORCING STEEL IS NOT INCLUDED IN REINFORCING SCHEDULE.
3. USE TEMPORARY CASING TO PREVENT POTENTIAL DRILLED SHAFT CAVING. REMOVE TEMPORARY CASING AS CONCRETE IS PLACED.
4. HOLD REINFORCING STEEL IN POSITION DURING PLACEMENT OF CONCRETE IN DRILLED SHAFT.
5. USE UNCOATED DEFORMED CARBON STEEL BARS CONFORMING TO ASTM A 706 GRADE 60 OR AASHTO M 31 GRADE 60, MEETING THE DUCTILITY REQUIREMENTS FOR ASTM A 706 FOR VERTICAL BARS IN DRILLED SHAFT. USE UNCOATED DEFORMED CARBON STEEL BARS CONFORMING TO AASHTO M 31 GRADE 60 FOR SPIRAL.
6. REVIEW THE CONDITIONS ENCOUNTERED AND REPORTED ON THE BORING LOGS FOUND IN THE "GEOTECHNICAL ENGINEERING REPORT" BY TERRACON CONSULTANTS DATED FEBRUARY 18, 2020.
7. NO LAP SPLICES PERMITTED IN VERTICAL REINFORCING STEEL. USE MECHANICAL SPLICES CAPABLE OF OF DEVELOPING AT LEAST 125% OF THE SPECIFIED MINIMUM YIELD STRENGTH OF THE REINFORCING BAR.
8. SPECIALTY EXCAVATION EQUIPMENT MAY BE REQUIRED TO ADVANCE EXCAVATIONS THROUGH DENSE TO VERY DENSE SOILS. COBBELS AND CEMENTED ZONES MAY BE ENCOUNTERED AT THE SITE.
9. USE CLASS AA(AE) CONCRETE WITH f'c = 4.0 KSI FOR DRILLED SHAFTS.
10. AT SPIRAL DISCONTINUITIES, TERMINATE THE SPIRAL WITH 1 1/4 TURN PLUS A TAIL EQUAL TO THE CAGE DIAMETER THROUGH THE CORE OF THE DRILLED SHAFT. AS AN ALTERNATE, PROVIDE MECHANICAL SPLICES CAPABLE OF DEVELOPING AT LEAST 125% OF THE SPECIFIED MINIMUM YIELD STRENGTH OF THE REINFORCING BAR.
11. CSL OR TIP INTEGRITY TESTING IS REQUIRED. REVIEW AND ADDRESS ANY VELOCITY OR ENERGY REDUCTIONS GREATER THAN 10%. MITIGATE ANY REDUCTIONS GREATER THAN 20%.

LOCATION	DC γ = 1.25	DW γ = 1.50	EH γ = 1.35	DD γ = 1.05	PL γ = 1.75	UPLIFT γ = 1.00	EQ HORZ γ = 1.00	EQ VERT γ = 1.00	EQ Δ ** γ = 1.00
	KIPS	KIPS	KIPS	KIPS	KIPS	KIPS	KIPS	KIPS	INCHES
ABUTMENT #1	313	NA	NA	NA	33	NA	411	NA	2.0
BENT #2	712	NA	NA	NA	152	NA	221	NA	0.5
BENT #3	699	NA	NA	NA	150	NA	307	NA	0.8
BENT #4	692	NA	NA	NA	147	NA	287	NA	0.3
ABUTMENT #5	317	NA	NA	NA	53	NA	411	NA	2.6

ITEM	LOCATION	EST QTY (FT)	EST CASING LENGTH (FT)	EST CONCRETE (CU YD)	EST REINF. (LB)
DRILLED SHAFTS, 60 INCH	ABUTMENT #1	47	32	34	6798
DRILLED SHAFTS, 60 INCH	BENT #2	40	41	29	8317
DRILLED SHAFTS, 60 INCH	BENT #3	35	37	26	7600
DRILLED SHAFTS, 60 INCH	BENT #4	31	34	23	7026
DRILLED SHAFTS, 60 INCH	ABUTMENT #5	35	25	26	5077

LOCATION	Q_{ULT}	Q_R	Q_{SCOUR} ϕ = 1.00	Q_{EQ} ϕ = 1.00	$Q_{EQ\ UPLIFT}$ ϕ = 1.00	Q_{UPLIFT} ϕ = 0.35	$Q_{SERVICE}$* ϕ = 1.00	Q_{R_EQ} ** ϕ = 1.00
	KIPS	KIPS	KIPS	KIPS	KIPS	KIPS	KIPS	INCH
ABUTMENT #1	2,090	1,150	NA	2,250	460	NA	1,365	2.2
BENT #2	2,110	1,160	NA	2,250	460	NA	1,365	2.6
BENT #3	2,640	1,450	NA	2,375	525	NA	1,450	3.3
BENT #4	2,270	1,250	NA	2,450	565	NA	1,500	3.3
ABUTMENT #5	1,910	1,050	NA	2,050	394	NA	1,200	3.1

* SETTLEMENT ≤ 0.5 INCHES
** DRILLED SHAFT SIZE AND DEPTH DESIGN CONTROLLED BY LATERAL DISPLACEMENTS. DISPLACEMENTS SHOWN ARE TAKEN AT TOP OF SHAFT.

AS CONSTRUCTED DRILLED SHAFT TIP ELEV	
	FEET
ABUT #1	
BENT #2	
BENT #3	
BENT #4	
ABUT #5	

LOCATION	DRILLED SHAFT DIAMETER	NUMBER OF DRILLED SHAFTS	EST TIP ELEV
	INCH		FEET
ABUTMENT #1	60	1	4670.00
BENT #2	60	1	4660.00
BENT #3	60	1	4666.00
BENT #4	60	1	4669.00
ABUTMENT #5	60	1	4679.50

REV	DATE	DESCRIPTION

Designed By: TGG
Drawn By: DCV
Checked By: AFY
Approved By: ALK

CivilScience Engineers | Surveyors | Solutions

UTA

DRILLED SHAFT DETAILS

LEHI CITY
LEH_OP_1
PED OVERPASS STRUCTURE - UDOT STR NO. F-923
SR-92 & DIGITAL DRIVE

CADD Filename: LEH_OP_1-BR-04.dgn
UTA Contract No.: 18-2399TP
Drawing: BR-04
Sheet No.: 4 OF 31

DGN Filer:P:\Proj\8344489\LEH_OP_1-BR-04.dgn
03-MAR-2020

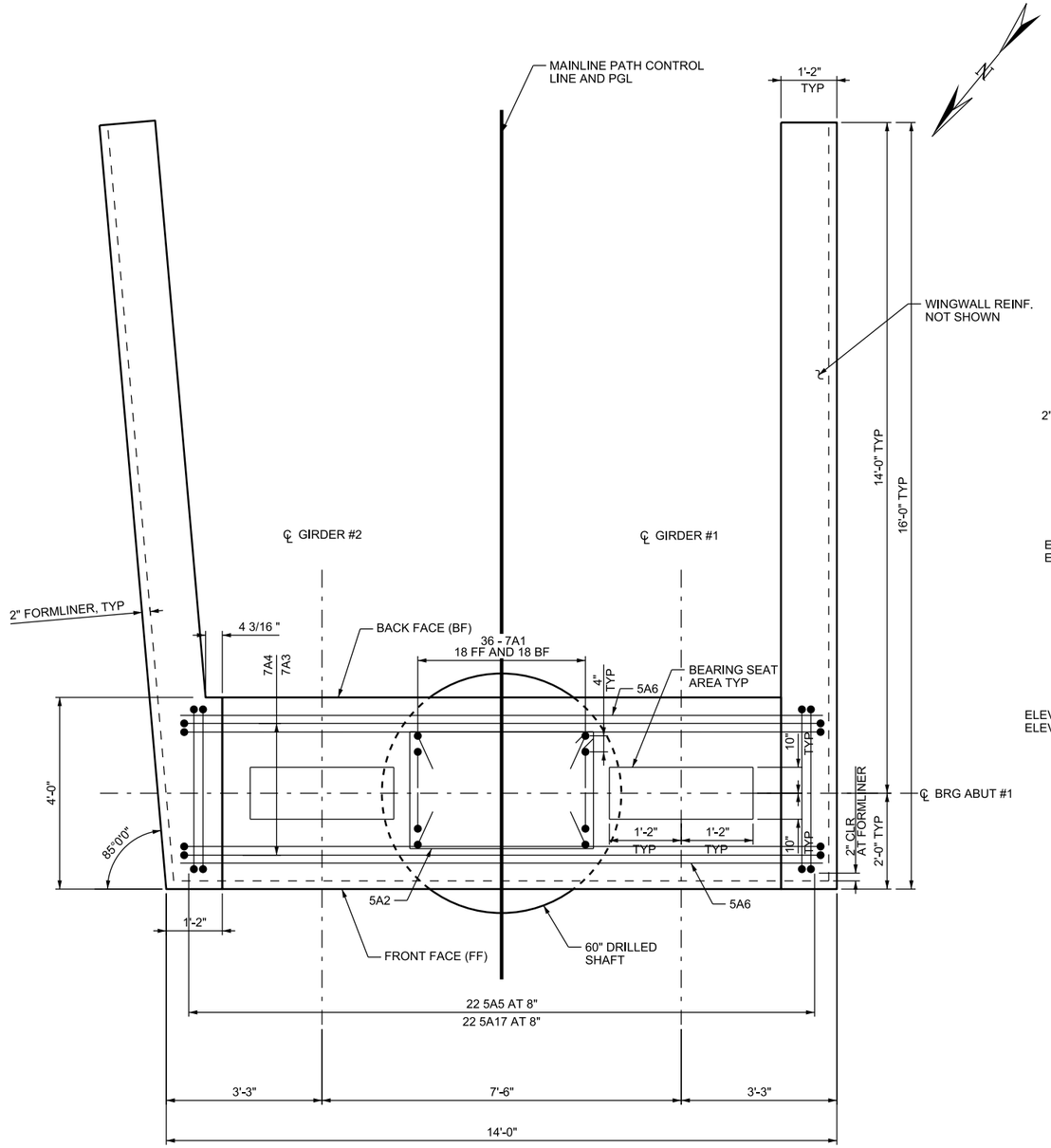

PLAN

ABUTMENT #1 SHOWN,
ABUTMENT #5 SIMILAR

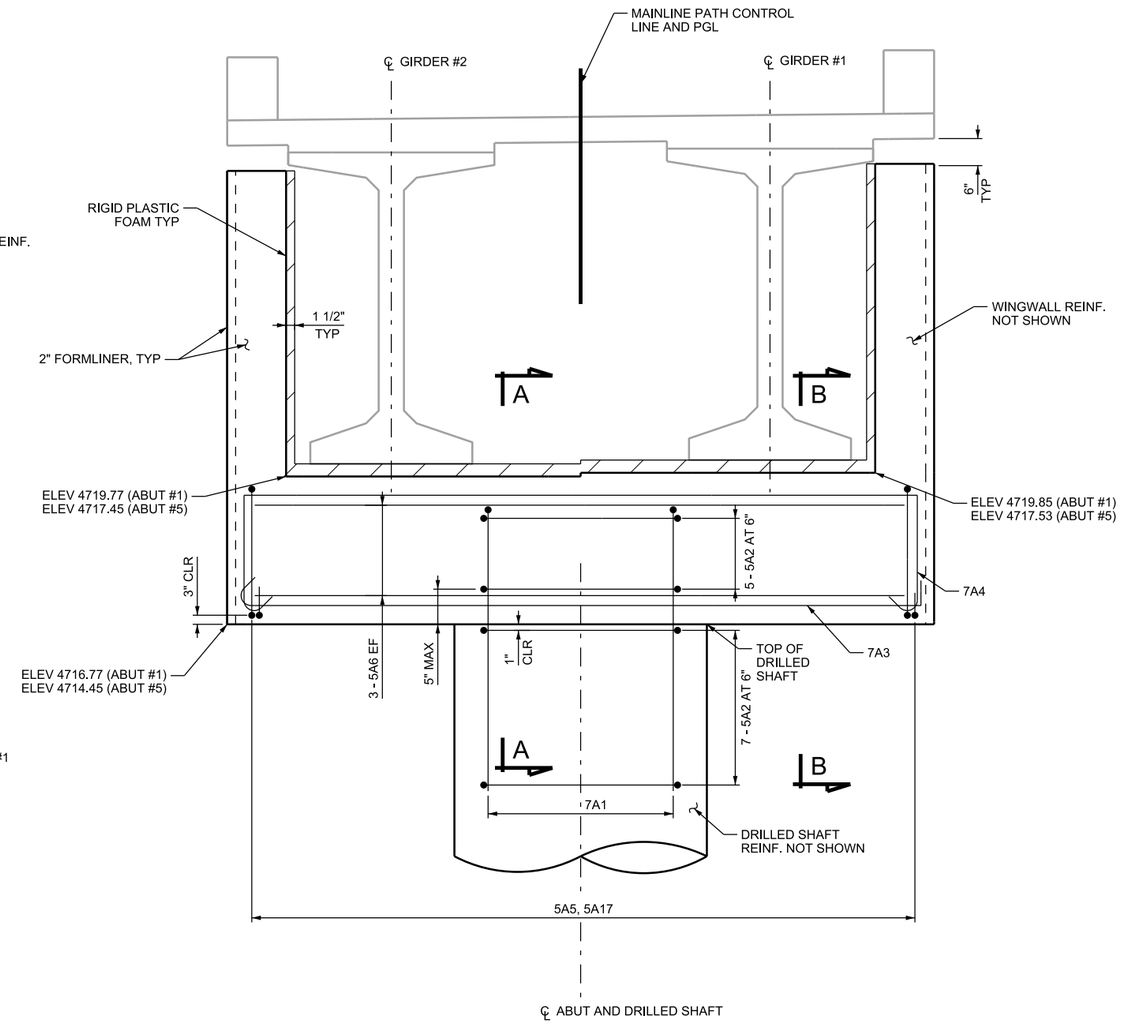

ELEVATION

ABUTMENT #1 SHOWN,
ABUTMENT #5 SIMILAR

NOTES:

1. SEE "WINGWALL DETAILS" FOR WINGWALL DETAILS.
2. SEE "ABUTMENT DETAILS" FOR SECTIONS A-A AND B-B.
3. FINISH BEARING SEAT AREA LEVEL. RUB OR GRIND LEVEL OVER BEARING SEAT AREA TO ELEVATION SHOWN ± 1/8".

QUANTITIES			
ITEM	LOCATION	EST QTY	UNIT
STRUCTURAL CONCRETE	ABUT #1	10.4	CU YD
STRUCTURAL CONCRETE	ABUT #5	10.4	CU YD

REV	DATE	DESCRIPTION

Designed By: TGG
Drawn By: DCV
Checked By: AFY
Approved By: ALK

CivilScience Engineers | Surveyors | Solutions

UTA

ABUTMENT PLAN AND ELEVATION

LEHI CITY
LEH_OP_1
PED OVERPASS STRUCTURE - UDOT STR NO. F-923
SR-92 & DIGITAL DRIVE

CADD Filename: LEH OP 1-BR-05.dgn
UTA Contract No.: 18-2399TP
Drawing: BR-05
Sheet No.: 5 OF 31

DGN: Files:P:\Proj\0344489\LEH_OP_1-BR-05.dgn
03-MAR-2026

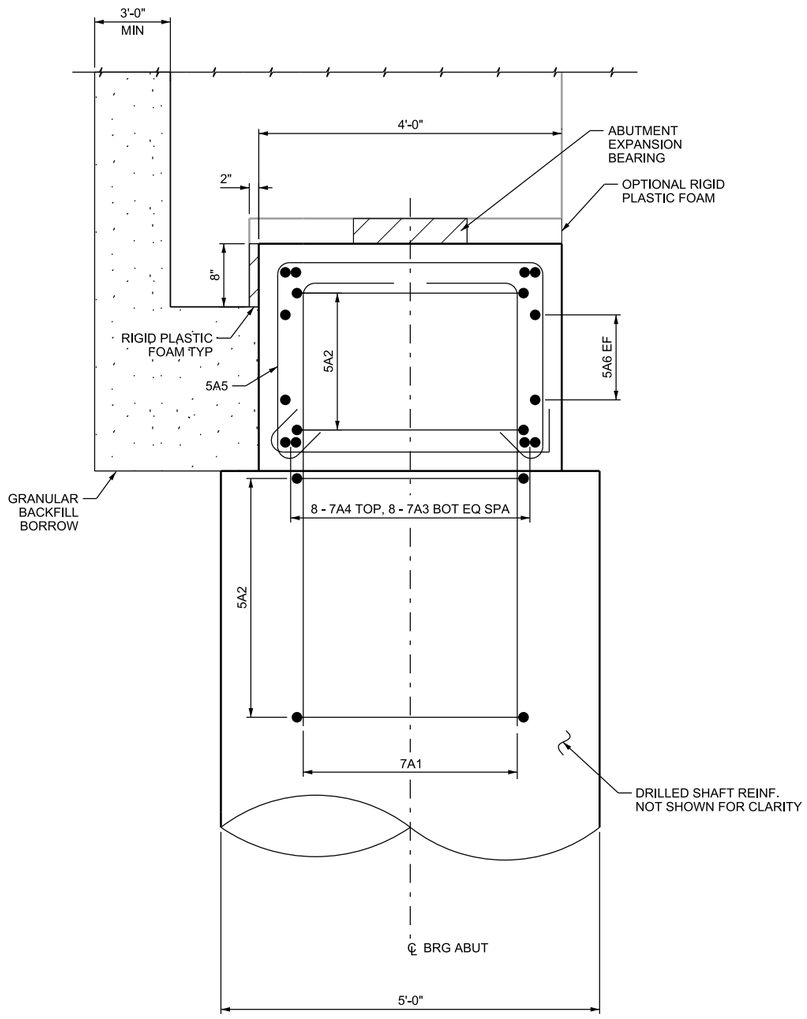

SECTION A-A

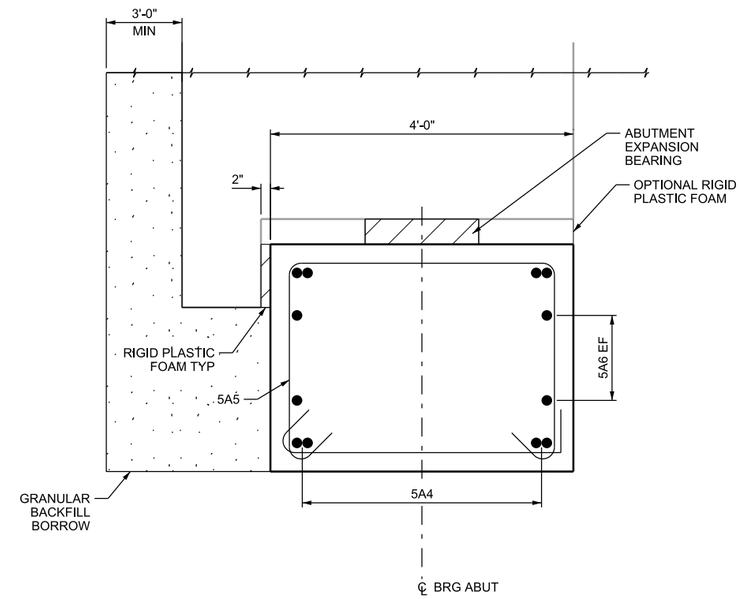

SECTION B-B

REV	DATE	DESCRIPTION

Designed By: TGG
Drawn By: DCV
Checked By: AFY
Approved By: ALK

CivilScience Engineers | Surveyors | Solutions

UTA

ABUTMENT DETAILS

LEHI CITY
LEH_OP_1
PED OVERPASS STRUCTURE - UDOT STR NO. F-923
SR-92 & DIGITAL DRIVE

CADD Filename: LEH OP 1-BR-06.dgn
UTA Contract No.: 18-2399TP
Drawing: BR-06
Sheet No.: 6 OF 31

DGN File: IP_PWP=d0344489\LEH_OP_1-BR-06.dgn
03-MAR-2020

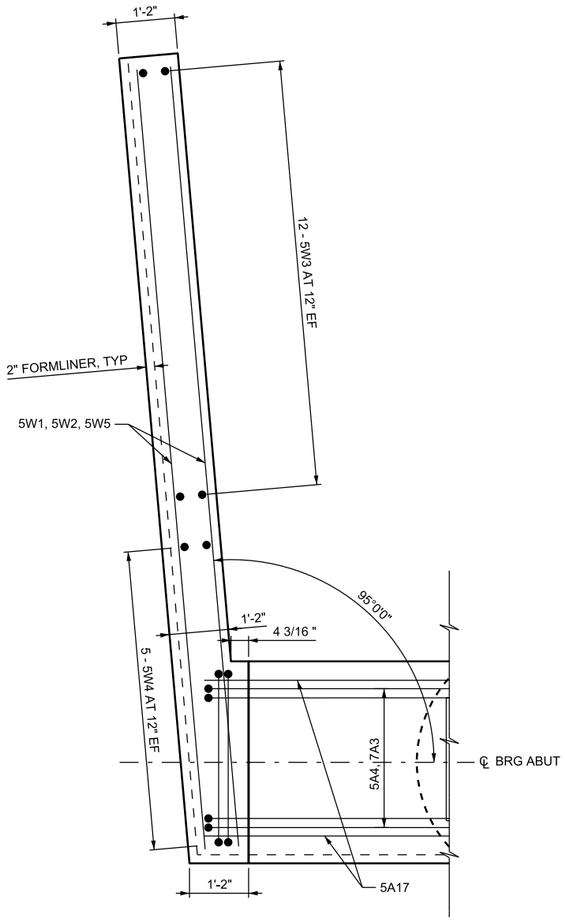

PLAN

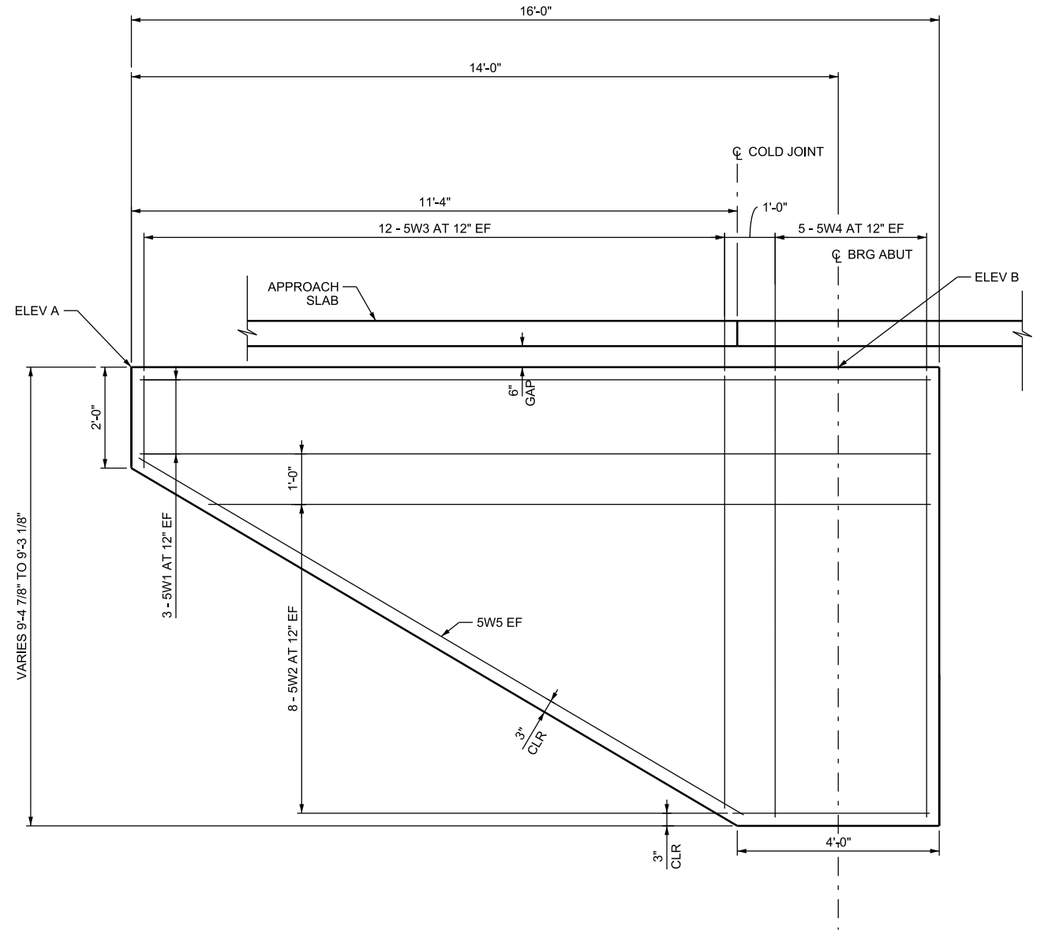

ELEVATION

NOTES:

1. SEE "ABUTMENT PLAN AND ELEVATION" FOR ADDITIONAL DETAILS.

LOCATION	ELEV A (FT)	ELEV B (FT)
ABUTMENT #1 WEST	4725.33	4726.03
ABUTMENT #1 EAST	4725.50	4726.17
ABUTMENT #5 WEST	4723.02	4723.70
ABUTMENT #5 EAST	4723.19	4723.86

QUANTITIES			
ITEM	LOCATION	EST QTY	UNIT
STRUCTURAL CONCRETE	ABUTMENT #1	8.9	CU YD
STRUCTURAL CONCRETE	ABUTMENT #2	8.9	CU YD

REV	DATE	DESCRIPTION

Designed By: TGG
Drawn By: DCV
Checked By: AFY
Approved By: ALK

CivilScience Engineers | Surveyors | Solutions

UTA

WINGWALL DETAILS

LEHI CITY
LEH_OP_1
PED OVERPASS STRUCTURE - UDOT STR NO. F-923
SR-92 & DIGITAL DRIVE

CADD Filename: LEH OP 1-BR-07.dgn
UTA Contract No.: 18-2399TP
Drawing: BR-07
Sheet No.: 7 OF 31

DGN File:\P:\Pw\u0344489\LEH_OP_1-BR-07.dgn
03-MAR-2020

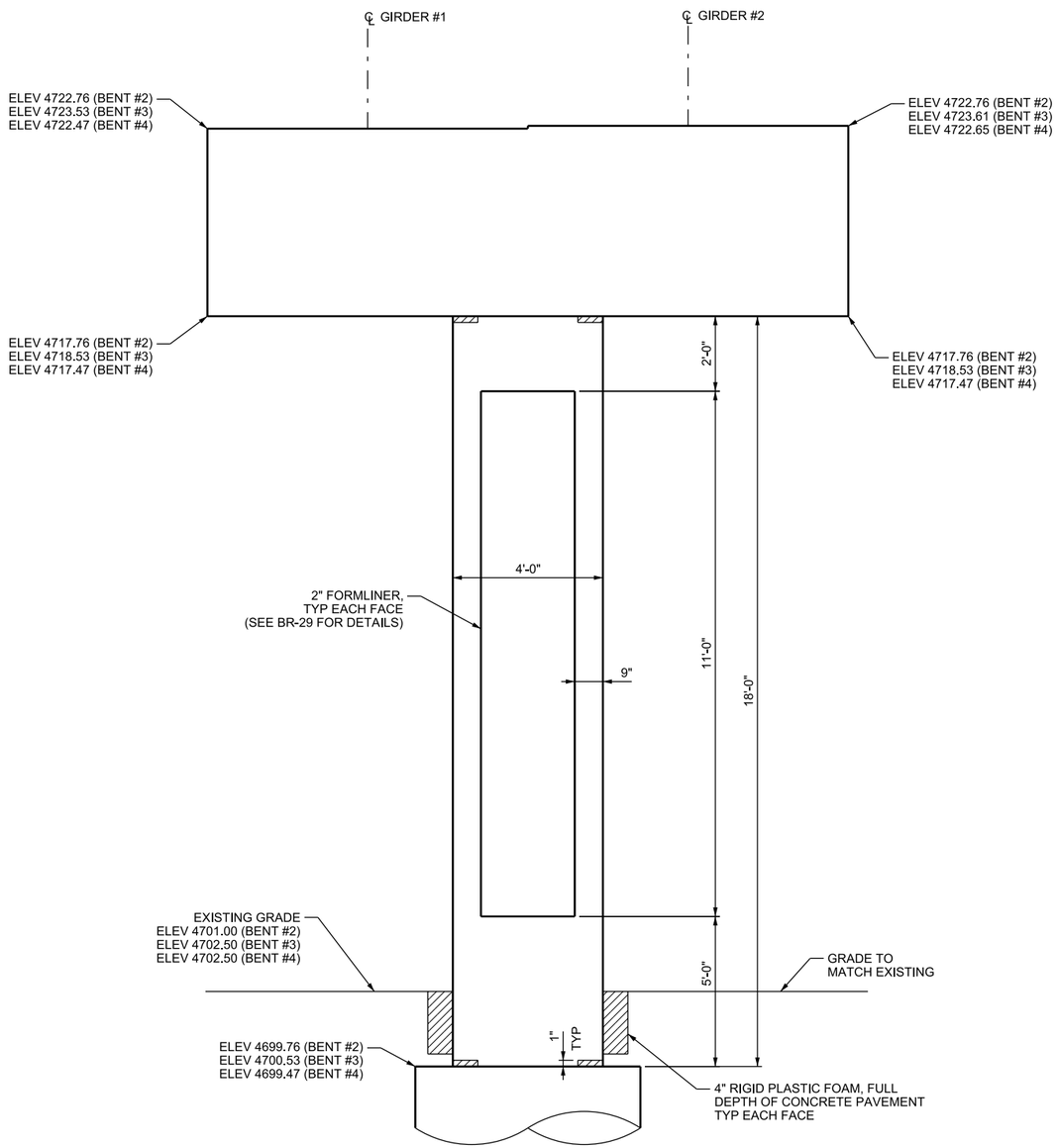

ELEVATION

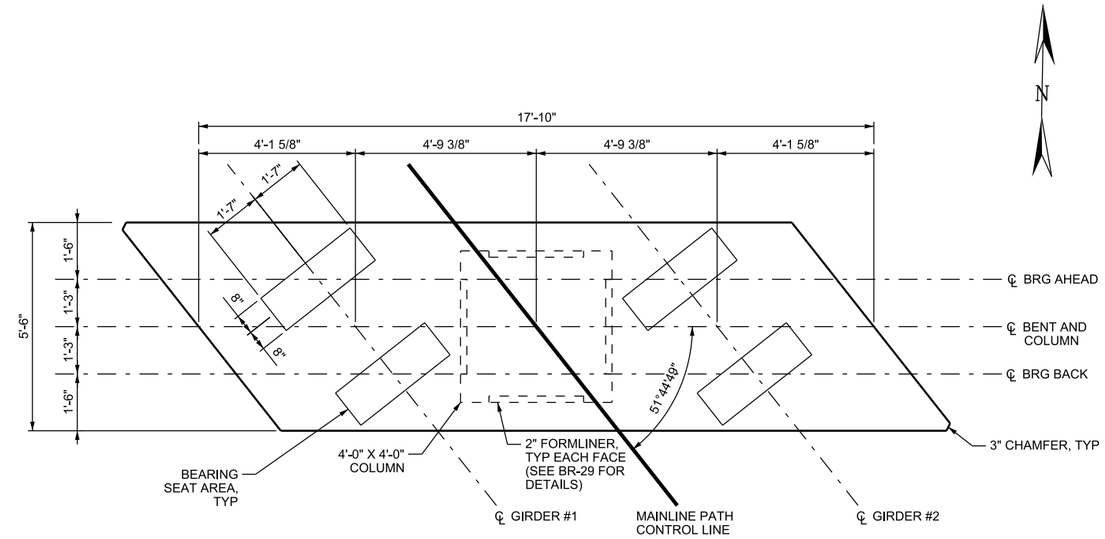

PLAN

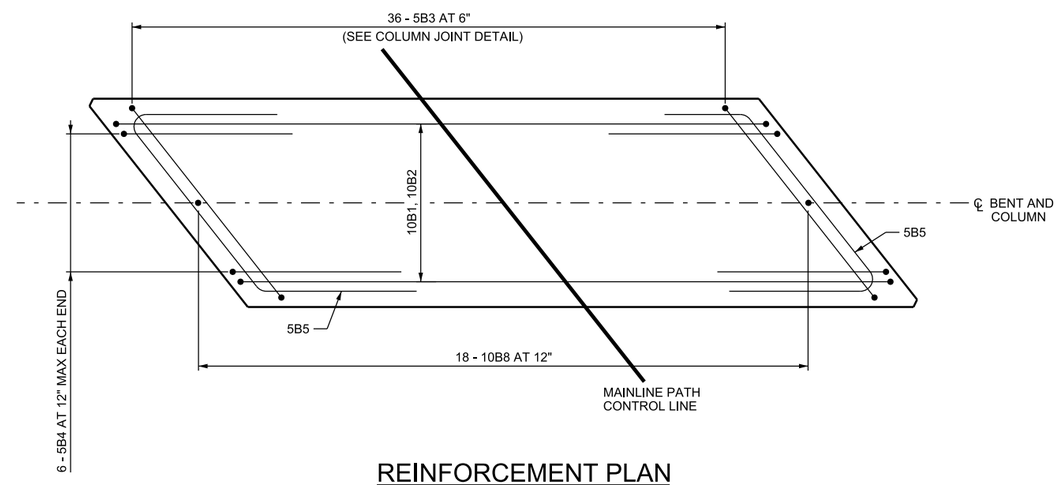

REINFORCEMENT PLAN

NOTES:

1. SEE "BENT DETAILS" FOR ADDITIONAL REINFORCEMENT INFORMATION.
2. FINISH BEARING SEAT AREA LEVEL. RUB OR GRIND LEVEL OVER BEARING SEAT AREA TO ELEVATION SHOWN ± 1/8".

REV	DATE	DESCRIPTION

Designed By: TGG
Drawn By: DCV
Checked By: AFY
Approved By: ALK

CivilScience Engineers | Surveyors | Solutions

UTA

BENT PLAN AND ELEVATION

LEHI CITY
LEH_OP_1
PED OVERPASS STRUCTURE - UDOT STR NO. F-923
SR-92 & DIGITAL DRIVE

CADD Filename: LEH OP 1-BR-08.dgn
UTA Contract No.: 18-2399TP
Drawing: BR-08
Sheet No.: 8 OF 31

DGN File: IP PWPrj@344489\LEH_OP_1-BR-08.dgn
03-MAR-2020

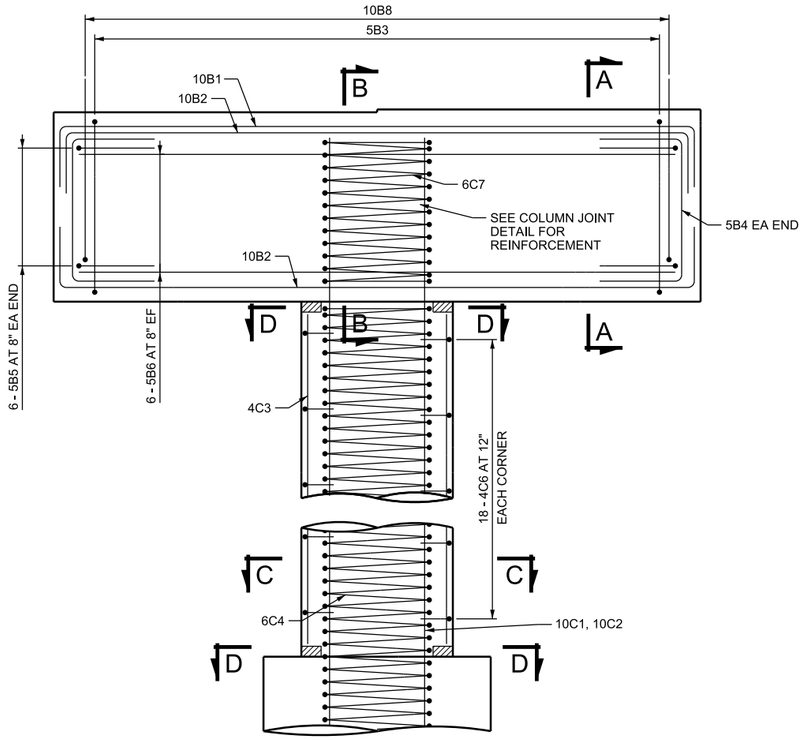

ELEVATION

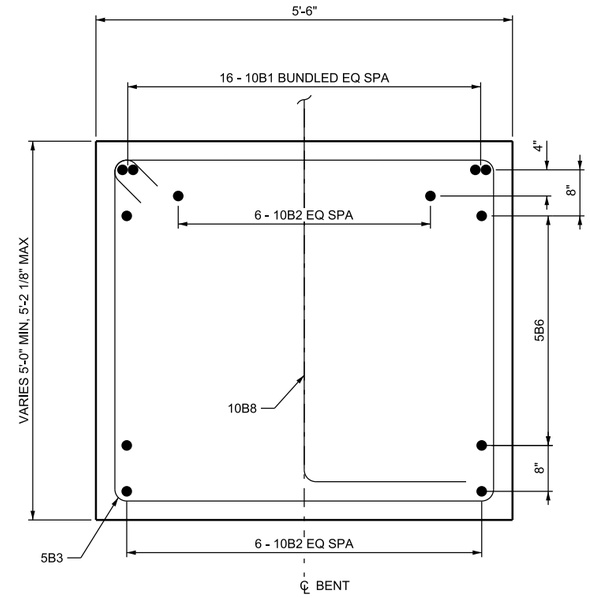

SECTION A-A

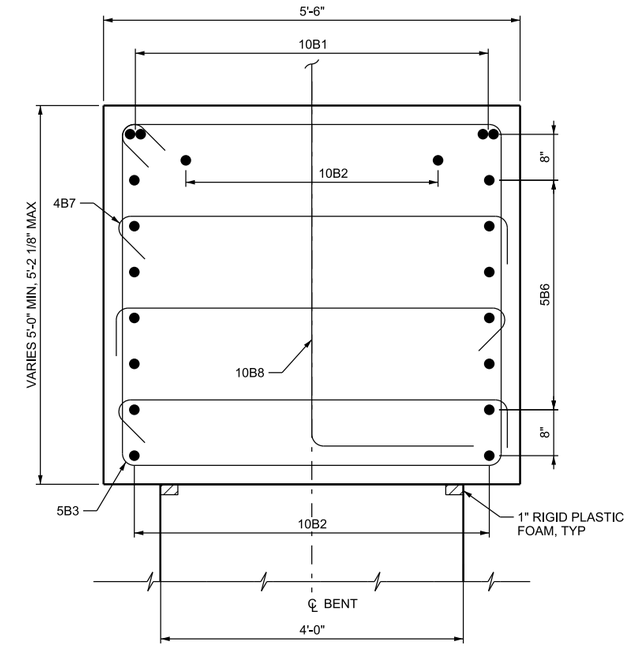

SECTION B-B

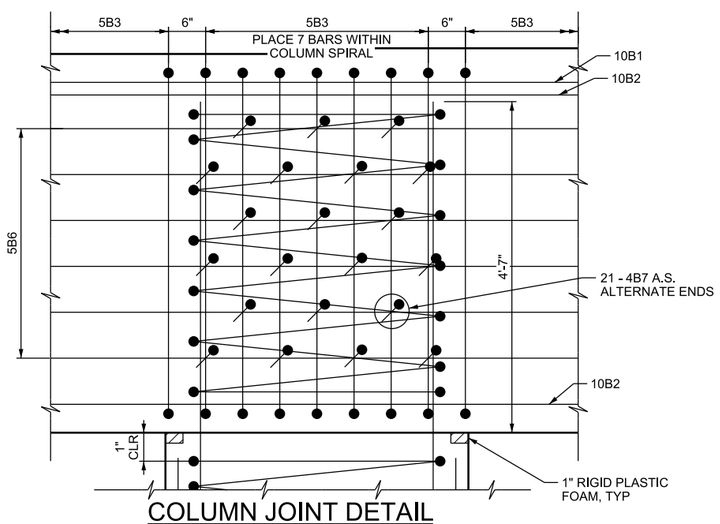

COLUMN JOINT DETAIL

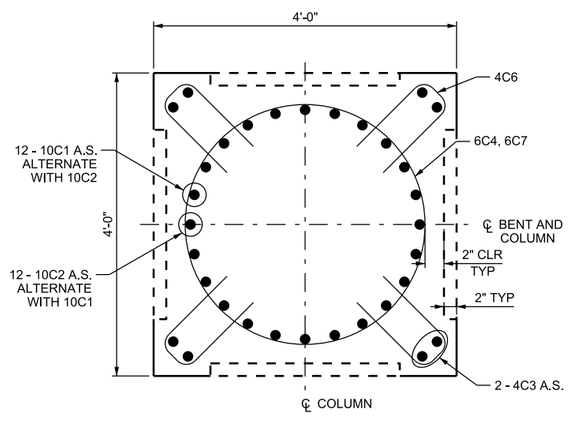

SECTION C-C

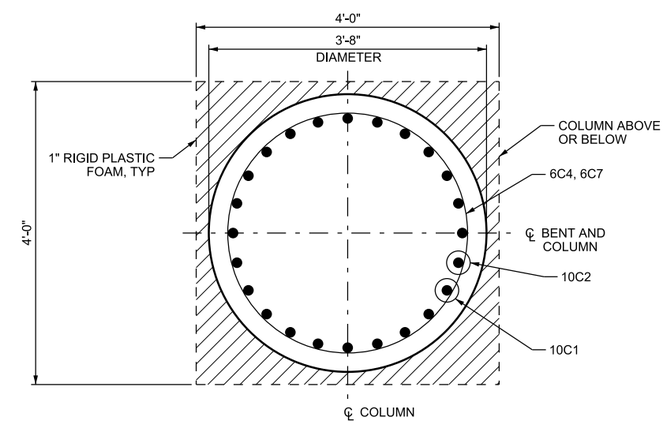

SECTION D-D

NOTES:

1. SPIRAL LAP SPLICES ARE NOT PERMITTED IN COLUMNS.
2. NO LAP SPLICES PERMITTED IN VERTICAL COLUMN REINFORCING.

REV	DATE	DESCRIPTION

Designed By: TGG
Drawn By: DCV
Checked By: AFY
Approved By: ALK

CivilScience Engineers | Surveyors | Solutions

UTA

BENT DETAILS

LEHI CITY
LEH_OP_1
PED OVERPASS STRUCTURE - UDOT STR NO. F-923
SR-92 & DIGITAL DRIVE

CADD Filename: LEH OP 1-BR-09.dgn
UTA Contract No.: 18-2399TP
Drawing: BR-09
Sheet No.: 9 OF 31

DGN File: P:\Proj\8344489\LEH_OP_1-BR-09.dgn
03-MAR-2020

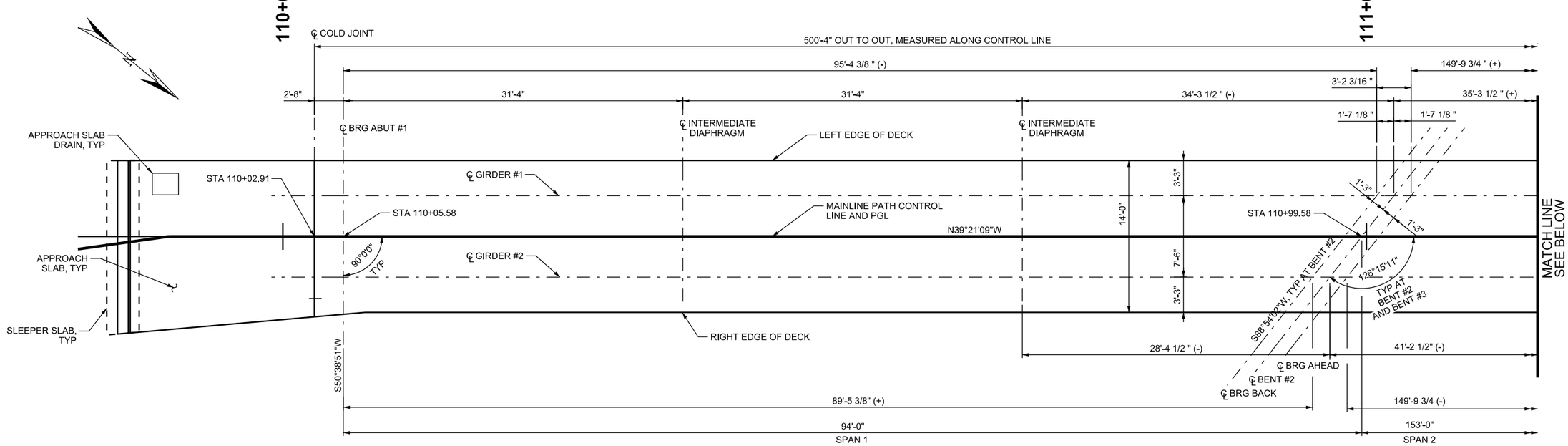

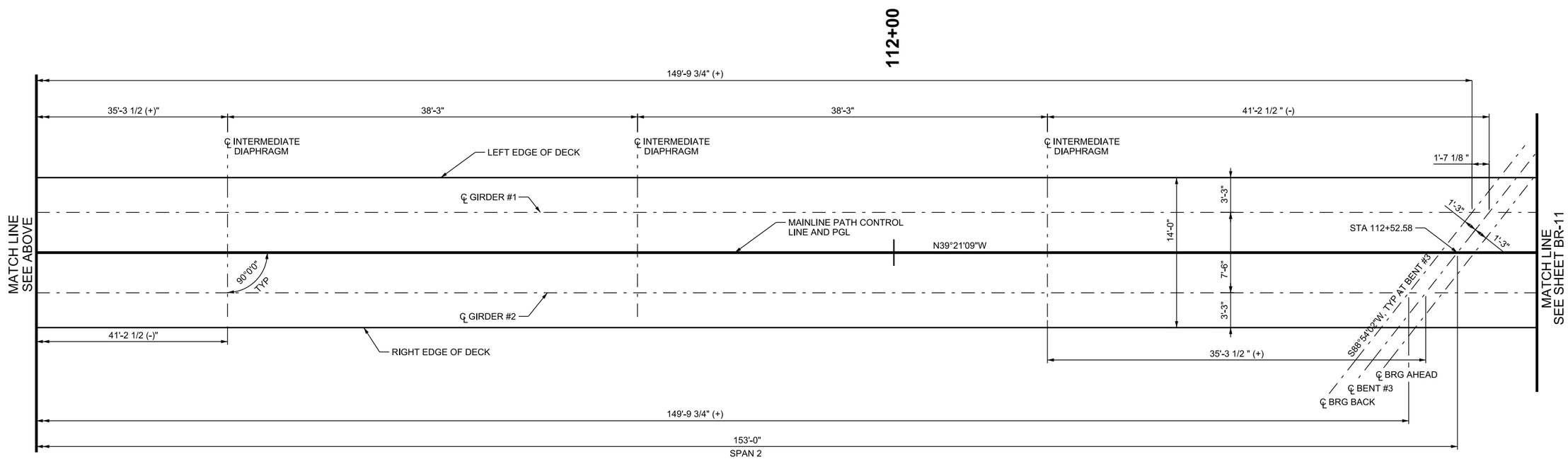

REV	DATE	DESCRIPTION

Designed By: KGJ
Drawn By: DCV
Checked By: AFY
Approved By: ALK

CivilScience Engineers | Surveyors | Solutions

UTA

FRAMING PLAN 1 OF 2

LEHI CITY
LEH_OP_1
PED OVERPASS STRUCTURE - UDOT STR NO. F-923
SR-92 & DIGITAL DRIVE

CADD Filename: LEH OP 1-BR-10.dgn
UTA Contract No.: 18-2399TP
Drawing: BR-10
Sheet No.: 10 OF 31

DGN: Files:P:\Proj\0344489\LEH_OP_1-BR-10.dgn
03-MAR-2020

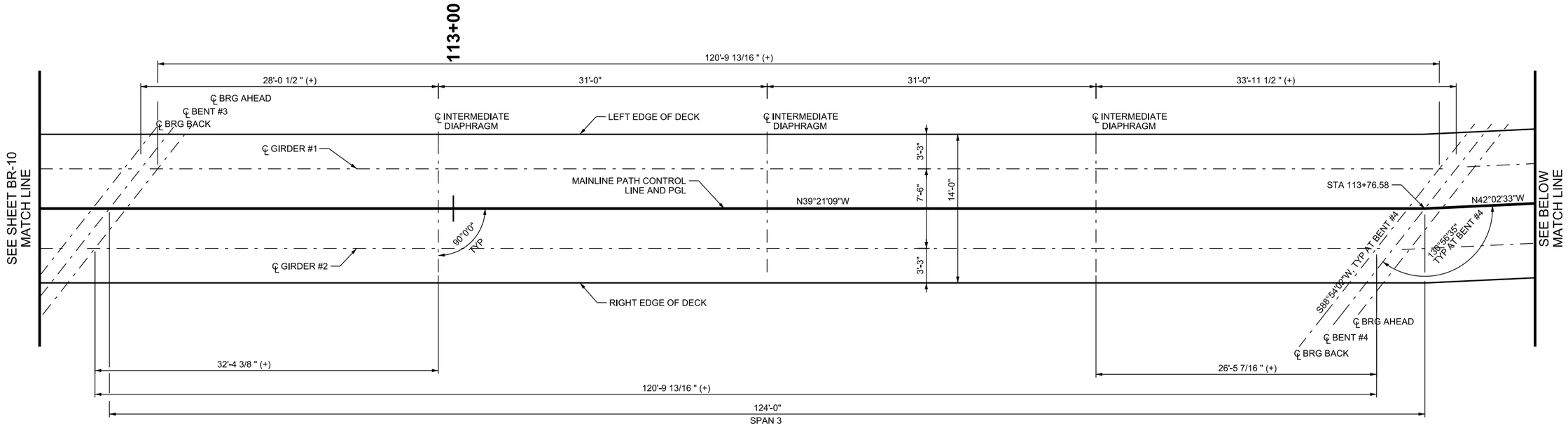

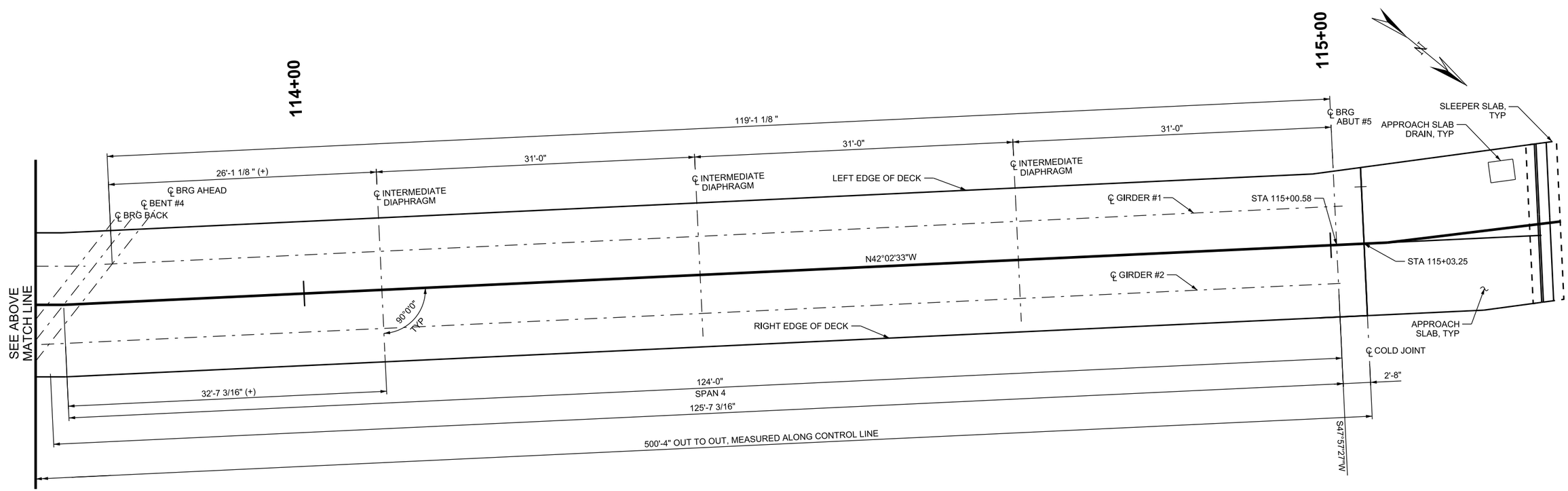

REV	DATE	DESCRIPTION

Designed By: KGJ
Drawn By: DCV
Checked By: AFY
Approved By: ALK

CivilScience Engineers | Surveyors | Solutions

UTA

FRAMING PLAN 2 OF 2

LEHI CITY
LEH_OP_1
PED OVERPASS STRUCTURE - UDOT STR NO. F-923
SR-92 & DIGITAL DRIVE

CADD Filename: LEH OP 1-BR-11.dgn
UTA Contract No.: 18-2399TP
Drawing: BR-11
Sheet No.: 11 OF 31

DGN File:IP-PWPw0344489\LEH_OP_1-BR-11.dgn
03-MAR-2020

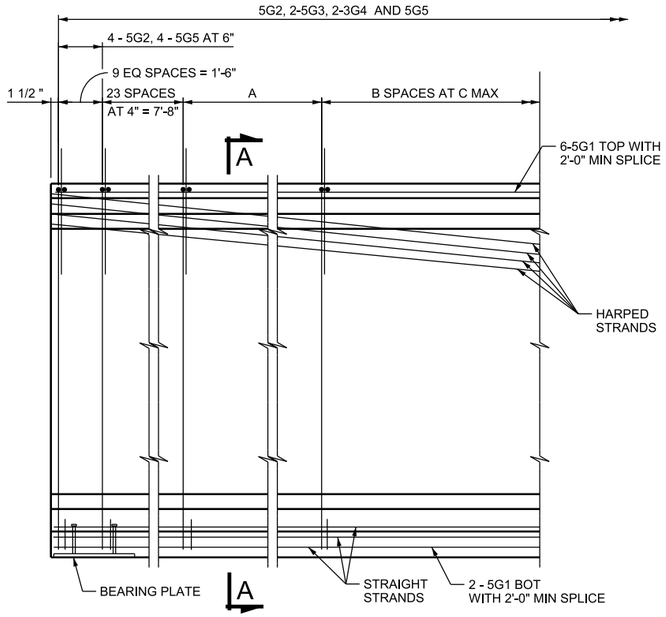

TYPICAL END ELEVATION

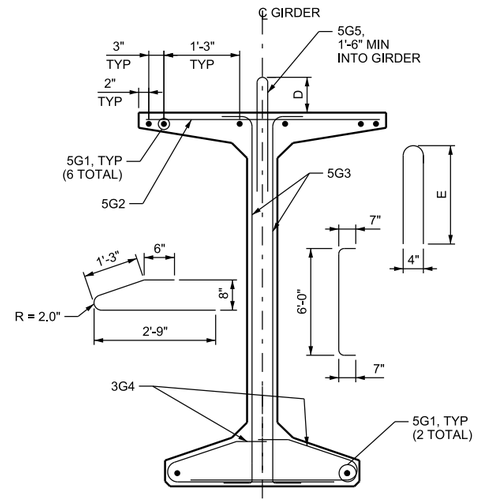

SECTION A-A

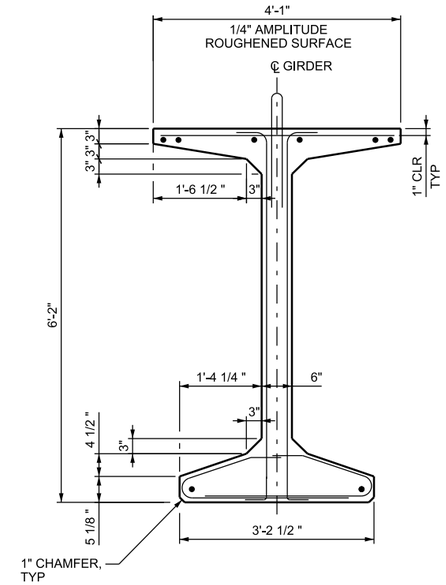

TYPICAL SECTION

GIRDER SCHEDULE				
SPAN	GIRDER	A	B	C
1	1	3.5"	79	12"
1	2	4"	73	12"
2	1 AND 2	1.5"	134	12"
3	1 AND 2	1.5"	105	12"
4	1	3.5"	103	12"
4	2	3.5"	109	12"

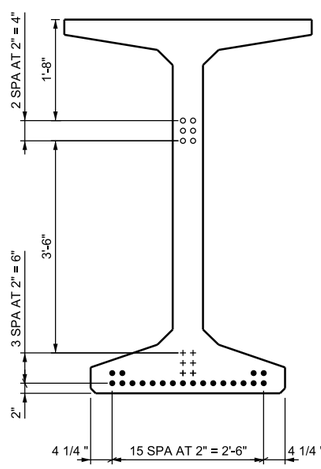

SPAN 1 STRAND PATTERN

● DENOTES STRAIGHT STRANDS
○ DENOTES HARPED STRANDS AT END
+ DENOTES HARPED STRANDS AT MIDSPAN

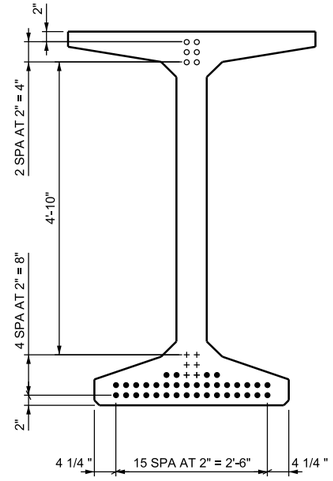

SPAN 2 STRAND PATTERN

● DENOTES STRAIGHT STRANDS
○ DENOTES HARPED STRANDS AT END
+ DENOTES HARPED STRANDS AT MIDSPAN

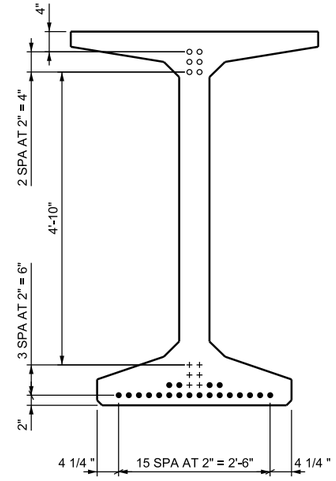

SPAN 3 STRAND PATTERN

● DENOTES STRAIGHT STRANDS
○ DENOTES HARPED STRANDS AT END
+ DENOTES HARPED STRANDS AT MIDSPAN

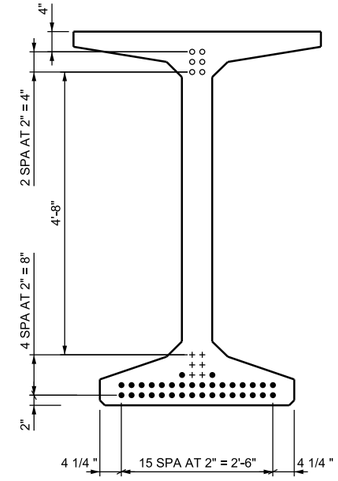

SPAN 4 STRAND PATTERN

● DENOTES STRAIGHT STRANDS
○ DENOTES HARPED STRANDS AT END
+ DENOTES HARPED STRANDS AT MIDSPAN

REV	DATE	DESCRIPTION

Designed By: KGJ
Drawn By: DCV
Checked By: AFY
Approved By: ALK

CivilScience Engineers | Surveyors | Solutions

UTA

UBT74 GIRDER DETAILS 1 OF 2

LEHI CITY
LEH_OP_1
PED OVERPASS STRUCTURE - UDOT STR NO. F-923
SR-92 & DIGITAL DRIVE

CADD Filename: LEH_OP_1-BR-12.dgn
UTA Contract No.: 18-2399TP
Drawing: BR-12
Sheet No.: 12 OF 31

DGN File: IP_PWPcd0344489\LEH_OP_1-BR-12.dgn
03-MAR-2020

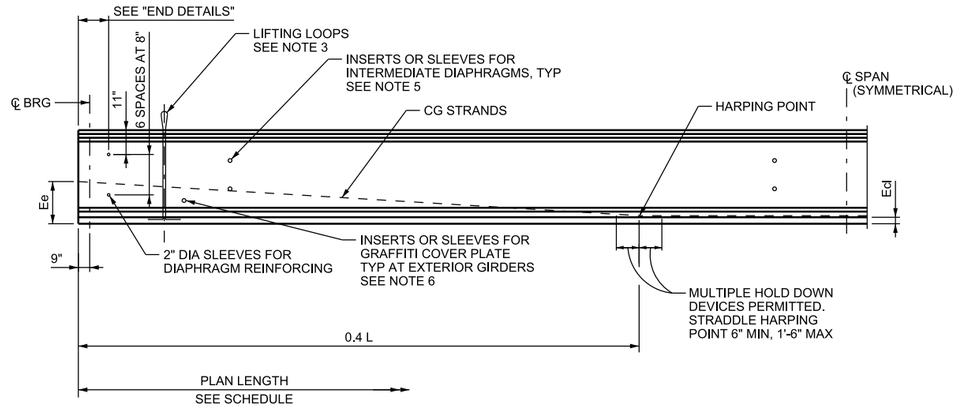

GIRDER ELEVATION

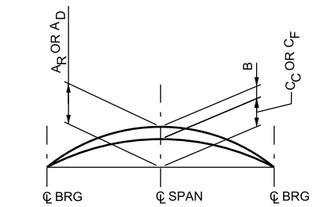

GIRDER CAMBER DIAGRAM

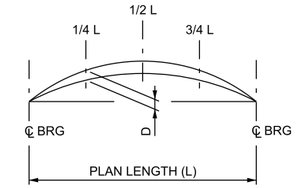

EXTENDED REINF. DIAGRAM

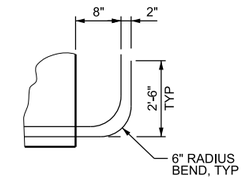

STRAND EXTENSION DETAIL

SEE NOTE 8

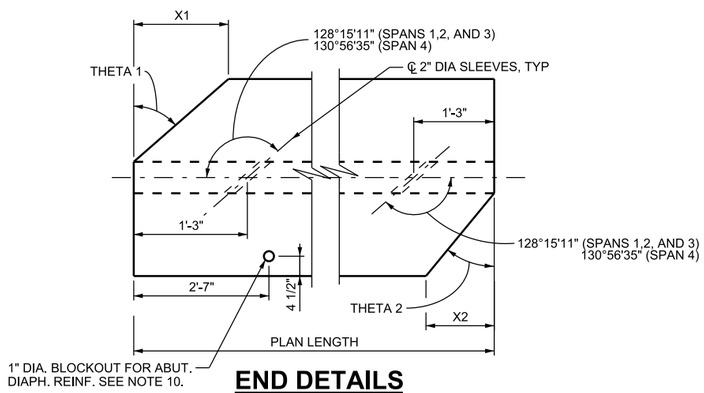

END DETAILS

CLIP TOP FLANGE ONLY

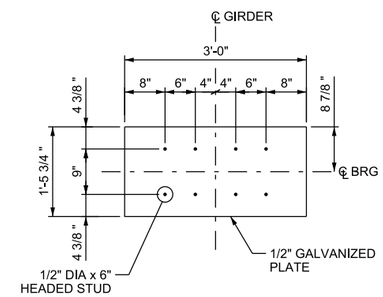

BEARING PLATE

NOTES

1. INCREASE PLAN LENGTH AS NECESSARY TO COMPENSATE FOR SHORTENING DUE TO PRESTRESS AND SHRINKAGE.
2. USE 0.6 INCH DIAMETER LOW RELAXATION STRANDS (AASHTO M 203 GRADE 270).
3. DESIGN AND INSTALL LIFTING EMBEDMENTS IN ACCORDANCE WITH THE SPECIFICATIONS.
4. BRACE GIRDERS TO PREVENT TIPPING AND TO CONTROL LATERAL BENDING DURING SHIPPING. BRACE GIRDERS LATERALLY TO PREVENT TIPPING UNTIL THE DIAPHRAGMS ARE INSTALLED.
5. SEE "FRAMING PLAN" FOR INTERMEDIATE DIAPHRAGM LOCATIONS AND SEE "INTERMEDIATE DIAPHRAGM DETAILS" FOR CONNECTION REQUIREMENTS.
6. USE INSERTS OR SLEEVES FOR GRAFFITI COVER PLATE. ADJUST HOLES TO AVOID CONFLICT WITH GIRDER STRANDS. SEE BENT BEARING PAD AND GRAFFITI PLATE DETAILS FOR LOCATION OF INSERTS OR SLEEVES.
7. NOTIFY ENGINEER IF ACTUAL CAMBER VARIES FROM THEORETICAL CAMBER BY MORE THAN 1 1/8 INCH.
8. EXTEND 8 STRANDS AS SHOWN FOR END OF GIRDER AT BENTS ONLY. CUT ALL OTHER STRANDS FLUSH. OFFSET EXTENDED STRANDS FROM SPAN TO SPAN. FABRICATOR TO SELECT AND SHOW EXTENDED STRANDS IN SHOP DRAWINGS.
9. USE STRUCTURAL STEEL CONFORMING TO AASHTO M 270 GRADE 36 FOR BEARING PLATE. GALVANIZE ACCORDING TO AASHTO M 111 AFTER FABRICATION.
10. BLOCKOUTS WILL BE LOCATED ON LEFT SIDE OF GIRDER AT SPAN 1 GIRDER 1 AND SPAN 4 GIRDER 1 AT ABUT. BEARING. RIGHT SIDE OF GIRDER AT SPAN 1 GIRDER 2 AND SPAN 4 GIRDER 2 AT ABUT. BEARING FOR A TOTAL OF 4 BLOCKOUTS.
11. LINEARLY VARY "D" AND "E" DIMENSIONS FOR 5G5 BARS BETWEEN THE VALUES SHOWN IN THE GIRDER SCHEDULE.

GIRDER SCHEDULE

SPAN	GIRDER	GIRDER TYPE	THETA 1	THETA 2	X1	X2	PLAN LENGTH (L)	0.4 L	f 'ci	f 'c	HARPED NUMBER OF STRANDS	HARPED JACKING FORCE	STRAIGHT NUMBER OF STRANDS	STRAIGHT JACKING FORCE	PRESTRESSED FORCE AFTER ALL LOSSES	LOCATION OF CG STRANDS INCH Ee	LOCATION OF CG STRANDS INCH Ecl	CAMBER INCH A_R	CAMBER INCH A_D	CAMBER INCH B	CAMBER INCH C_C	CAMBER INCH C_F	5G5 BAR DIMENSIONS 0 D	0 E	1/4 L 1/4 L	1/4 L D	1/4 L E	1/2 L 1/2 L	1/2 L D	1/2 L E	3/4 L 3/4 L	3/4 L D	3/4 L E	L D	L E
					INCH				KSI	KSI		KIPS		KIPS	KIPS																				
1	1	UBT74	0°0'0"	51°45'49"	0	27"(+)	97'-2 1/2"	38'-11"	6.5	8.5	6	263.7	20	878.8	970.4	13.85	3.23	1.0	1.7	0.6	1.1	1.3	5"	27"	24'-3 5/8"	8"	30"	48'-7 1/4"	9"	31"	72'-10 7/8"	8"	30"	5"	27"
1	2	UBT74	0°0'0"	51°45'49"	0	27"(+)	91'-3 1/2"	36'-6"	6.5	8.5	6	263.7	20	878.8	967.0	13.85	3.23	0.9	1.6	0.5	1.1	1.4	5"	27"	22'-9 7/8"	7"	29"	45'-7 3/4"	8"	30"	68'-5 5/8"	7"	29"	5"	27"
2	1 AND 2	UBT74	51°45'49"	51°45'49"	27"(+)	27"(+)	152'-0"	60'-10"	6.5	8.5	6	263.7	36	1581.9	1508.4	12.86	4.00	2.6	4.5	4.1	0.4	0.7	D = 4", E = 26"												
3	1 AND 2	UBT74	51°45'49"	51°45'49"	27"(+)	27"(+)	123'-0"	49'-2"	6.5	8.5	6	263.7	20	878.8	987.3	17.54	3.23	1.0	1.7	1.6	0.1	0.2	D = 5", E = 27"												
4	1	UBT74	49°03'25"	0°0'0"	25"(-)	0	121'-3 1/2"	48'-6"	6.5	8.5	6	263.7	34	1494.0	1414.8	12.90	3.90	2.2	3.8	1.7	2.1	2.7	5"	27"	30'-3 7/8"	8"	30"	60'-7 3/4"	9"	31"	90'-11 5/8"	7"	30"	5"	27"
4	2	UBT74	49°03'25"	0°0'0"	25"(-)	0	127'-2 1/2"	50'-11"	6.5	8.5	6	263.7	34	1494.0	1421.8	12.90	3.90	2.3	4.0	2.1	1.9	2.4	5"	27"	31'-9 5/8"	9"	31"	63'-7 1/4"	10"	32"	95'-4 7/8"	7"	30"	5"	27"

CAMBER NOTES: A_R = GIRDER CAMBER AT RELEASE
A_D = GIRDER CAMBER JUST BEFORE DECK PLACEMENT (USE 40 DAYS)
B = DEFLECTION DUE TO ALL DEAD LOADS APPLIED TO THE GIRDER
C_C = GIRDER CAMBER AT CONSTRUCTION AFTER ALL DEAD LOADS APPLIED
C_F = GIRDER CAMBER AT 20 YEARS

CG STRAND NOTES: Ee = CG OF ALL STRANDS AT END OF GIRDER
Ecl = CG OF ALL STRANDS AT MIDSPAN OF GIRDER

REV	DATE	DESCRIPTION

Designed By: KGJ
Drawn By: DCV
Checked By: AFY
Approved By: ALK

CivilScience Engineers | Surveyors | Solutions

UTA

UBT74 GIRDER DETAILS 2 OF 2

LEHI CITY
LEH_OP_1
PED OVERPASS STRUCTURE - UDOT STR NO. F-923
SR-92 & DIGITAL DRIVE

CADD Filename: LEH_OP_1-BR-13.dgn
UTA Contract No.: 18-2399TP
Drawing: BR-13
Sheet No.: 13 OF 31

DGN File: IP_PWPod0344489\LEH_OP_1-BR-13.dgn
03-MAR-2020

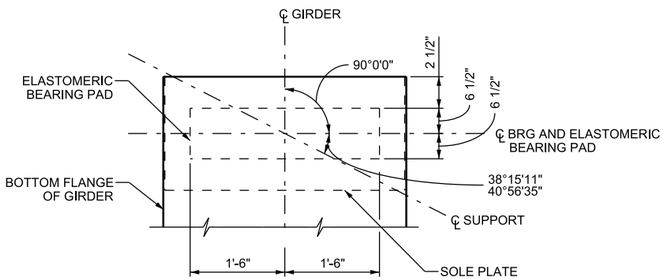

BENT BEARING PLAN

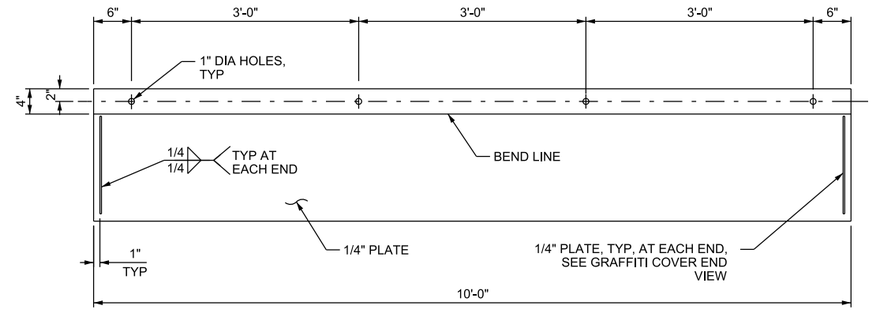

GRAFFITI COVER ELEVATION

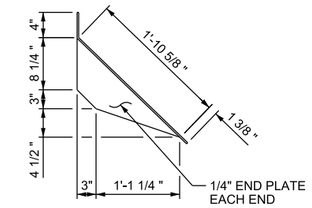

GRAFFITI COVER END VIEW

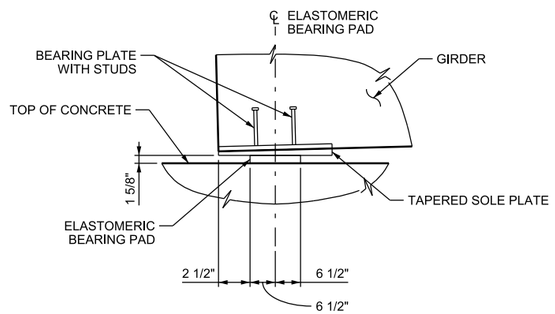

BENT BEARING DETAIL - SIDE VIEW

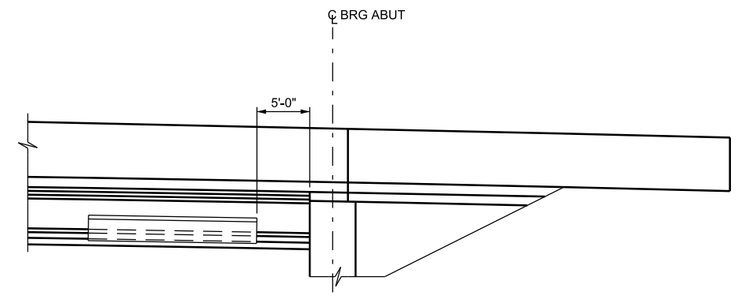

GRAFFITI COVER LOCATION

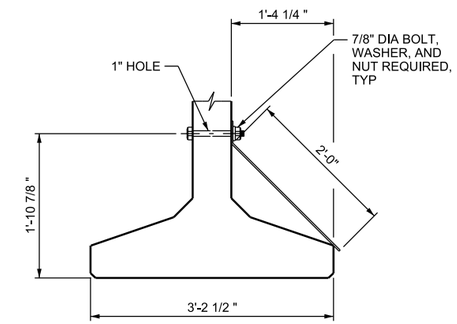

GRAFFITI COVER SECTION

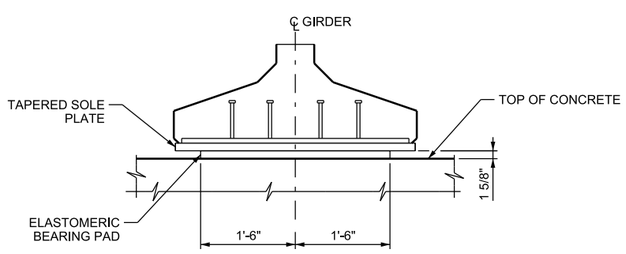

BENT BEARING DETAIL - END VIEW

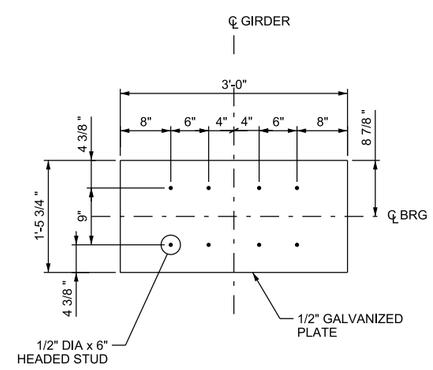

BEARING PLATE

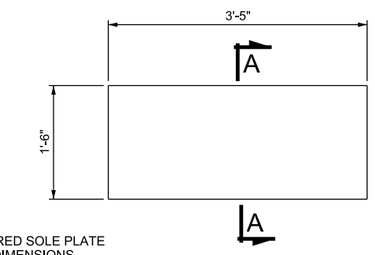

PLAN

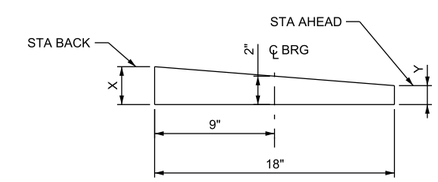

SECTION A-A

TAPERED SOLE PLATE DIMENSIONS

LOCATION	X	Y
S1-G1 BENT #2	1 13/16"	2 3/16"
S1-G2 BENT #2	1 3/4"	2 1/4"
S2-G1 BENT #2	1 7/8"	2 1/8"
S2-G2 BENT #2	1 7/8"	2 1/8"
S2-G1 BENT #3	2"	2"
S2-G2 BENT #3	2"	2"
S3-G1 BENT #3	2"	2"
S3-G2 BENT #3	2"	2"
S3-G1 BENT #4	2 1/8"	1 7/8"
S3-G2 BENT #4	2 1/8"	1 7/8"
S4-G1 BENT #4	2 1/4"	1 3/4"
S4-G2 BENT #4	2 1/4"	1 3/4"

TAPERED SOLE PLATE

NOTES

1. USE AASHTO M 270 GRADE 36 STEEL FOR GRAFFITI COVER. USE 7/8 INCH DIA ASTM A 307 GRADE A BOLTS WITH ASTM A 563 NUTS AND ASTM F 436 WASHERS. GALVANIZE ALL NUTS, BOLTS AND WASHERS ACCORDING TO ASTM A 153 CLASS C. PAINT GRAFFITI COVERS TO MATCH THE COLOR OF THE GIRDERS.
2. USE 60 DUROMETER HARDNESS (SHORE A), GRADE 3 ELASTOMER. MINIMUM AND MAXIMUM SHEAR MODULUS ARE 0.130 KSI AND 0.200 KSI, RESPECTIVELY. BEARING PADS ARE DESIGNED USING METHOD A.
3. USE AASHTO M 270 GRADE 50 STEEL FOR TAPERED SOLE PLATE.

REV	DATE	DESCRIPTION

Designed By: KGJ
Drawn By: DCV
Checked By: AFY
Approved By: ALK

CivilScience Engineers | Surveyors | Solutions

UTA

BENT BEARING PAD AND GRAFFITI PLATE DETAILS

LEHI CITY
LEH_OP_1
PED OVERPASS STRUCTURE - UDOT STR NO. F-923
SR-92 & DIGITAL DRIVE

CADD Filename: LEH_OP_1-BR-14.dgn
UTA Contract No.: 18-2399TP
Drawing: BR-14
Sheet No.: 14 OF 31

DGN: Files\P PWP\d0344489\LEH_OP_1-BR-14.dgn
03-MAR-2020

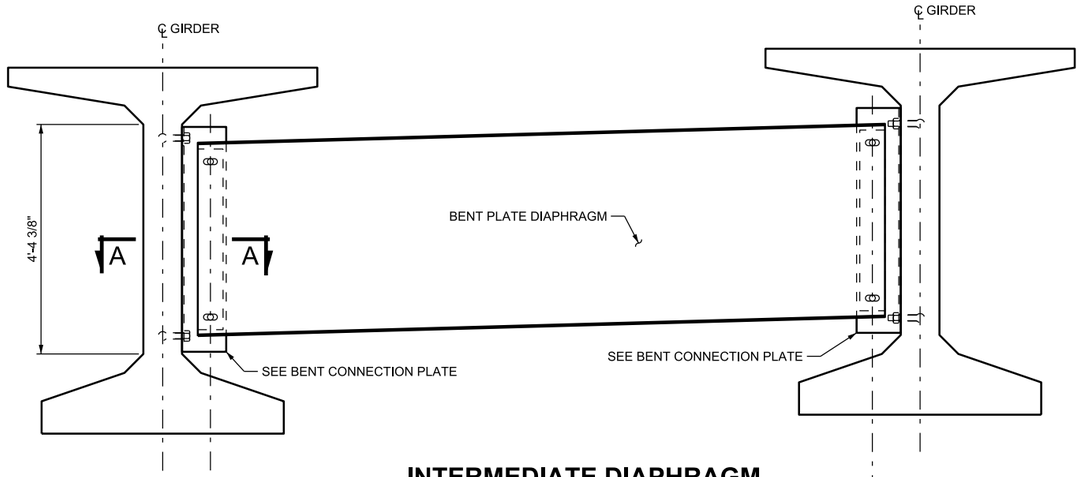

INTERMEDIATE DIAPHRAGM

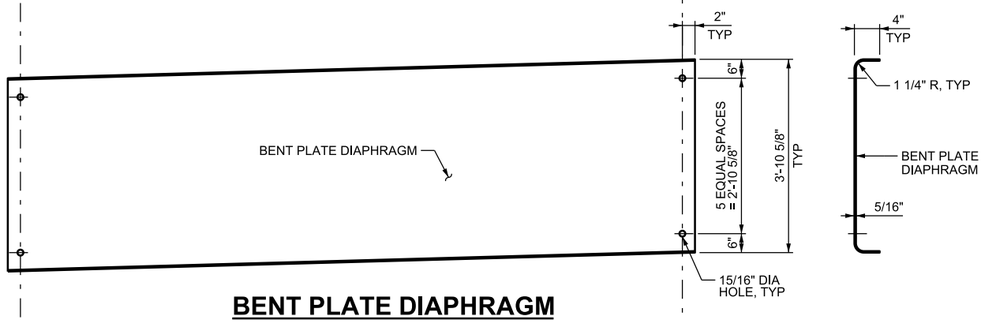

BENT PLATE DIAPHRAGM

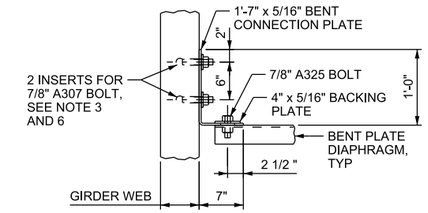

SECTION A-A

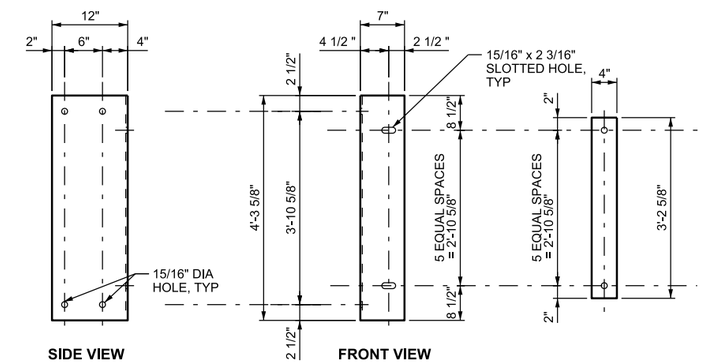

BENT CONNECTION PLATE

BACKING PLATE

NOTES

1. USE AASHTO M270 GRADE 36 STEEL FOR ALL CONNECTION ANGLES AND PLATES. GALVANIZE ALL CONNECTION ANGLES AND PLATES IN ACCORDANCE WITH AASHTO M111.
2. USE 7/8 INCH DIAMETER ASTM F3125, GRADE A325, TYPE 1, NUTS AND BOLTS AND ASTM F959 WASHERS FOR STEEL ONLY CONNECTIONS. GALVANIZE ALL NUTS, BOLTS AND WASHERS IN ACCORDANCE WITH ASTM A153, CLASS C. BOLTS ARE SLIP CRITICAL. PROVIDE A CLASS C SURFACE CONDITION.
3. USE 7/8 INCH DIAMETER ASTM A307, GRADE A, NUTS, BOLTS AND WASHERS FOR STEEL AND CONCRETE CONNECTIONS. GALVANIZE ALL NUTS, BOLTS AND WASHERS IN ACCORDANCE WITH ASTM A153, CLASS C.
4. USE ASTM F436 WASHERS FOR ALL CONCRETE TO STEEL CONNECTIONS. GALVANIZE ALL WASHERS IN ACCORDANCE WITH ASTM A153, CLASS C.
5. USE THREADED INSERTS FOR DIAPHRAGM CONNECTIONS TO EXTERIOR GIRDERS. PLACE INSERTS PERPENDICULAR TO WEB. PROVIDE INSERTS WITH A MINIMUM ULTIMATE TENSILE CAPACITY OF 11.0 KIPS.
6. ADJUST LOCATION OF INSERTS AND HOLES IN WEB TO AVOID INTERFERENCE WITH PRESTRESSING STRAND. COORDINATE CHANGES WITH BENT CONNECTION PLATE SUPPLIER.
7. FIELD DRILLING OF BENT CONNECTION PLATE IS PERMITTED. FIELD WELDS ARE NOT PERMITTED.
8. INCLUDE GIRDER DIAPHRAGMS IN COST OF GIRDER.

ITEM	EST QTY	UNIT	EST WEIGHT (LB)
SPAN 1 DIAPHRAGM (SEE NOTE 8)	2	EACH	1210
SPAN 2 DIAPHRAGM (SEE NOTE 8)	3	EACH	1815
SPAN 3 DIAPHRAGM (SEE NOTE 8)	3	EACH	1815
SPAN 4 DIAPHRAGM (SEE NOTE 8)	3	EACH	1815

REV	DATE	DESCRIPTION

Designed By: KGJ
Drawn By: DCV
Checked By: AFY
Approved By: ALK

CivilScience Engineers | Surveyors | Solutions

UTA

INTERMEDIATE DIAPHRAGM DETAILS

LEHI CITY
LEH_OP_1
PED OVERPASS STRUCTURE - UDOT STR NO. F-923
SR-92 & DIGITAL DRIVE

CADD Filename: LEH_OP_1-BR-15.dgn
UTA Contract No.: 18-2399TP
Drawing: BR-15
Sheet No.: 15 OF 31

DGN File: IP_PWPod0344489\LEH_OP_1-BR-15.dgn
03-MAR-2020

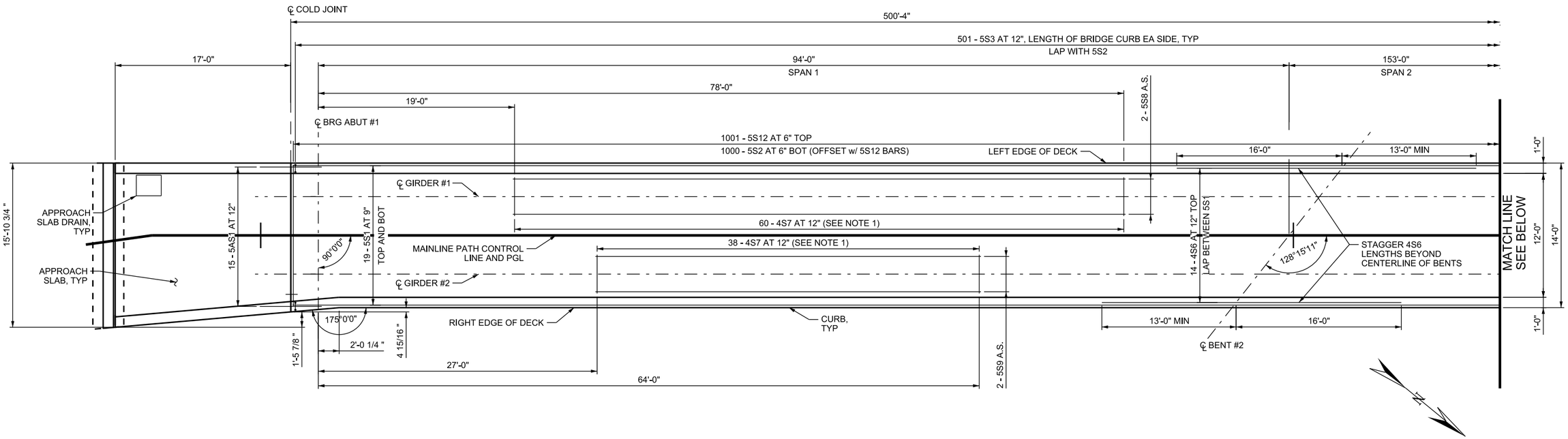

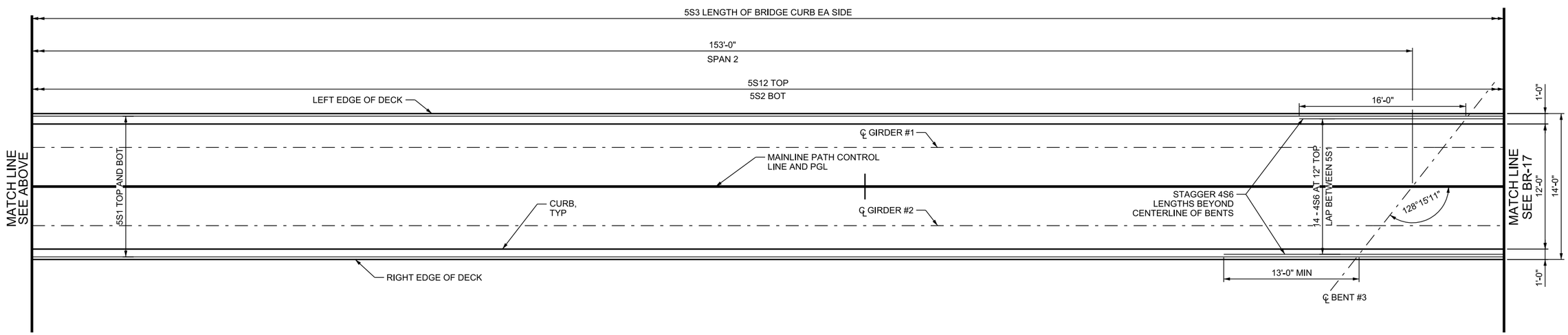

NOTES

1. REFER TO "DECK SECTION" FOR HAUNCH REINFORCEMENT DETAIL.

REV	DATE	DESCRIPTION

Designed By: KGJ
Drawn By: DCV
Checked By: AFY
Approved By: ALK

CivilScience Engineers | Surveyors | Solutions

UTA

DECK PLAN 1 OF 2

LEHI CITY
LEH_OP_1
PED OVERPASS STRUCTURE - UDOT STR NO. F-923
SR-92 & DIGITAL DRIVE

CADD Filename: LEH OP 1-BR-16.dgn
UTA Contract No.: 18-2399TP
Drawing: BR-16
Sheet No.: 16 OF 31

DGN Files IP PWPw0344489\LEH_OP_1-BR-16.dgn
03-MAR-2020

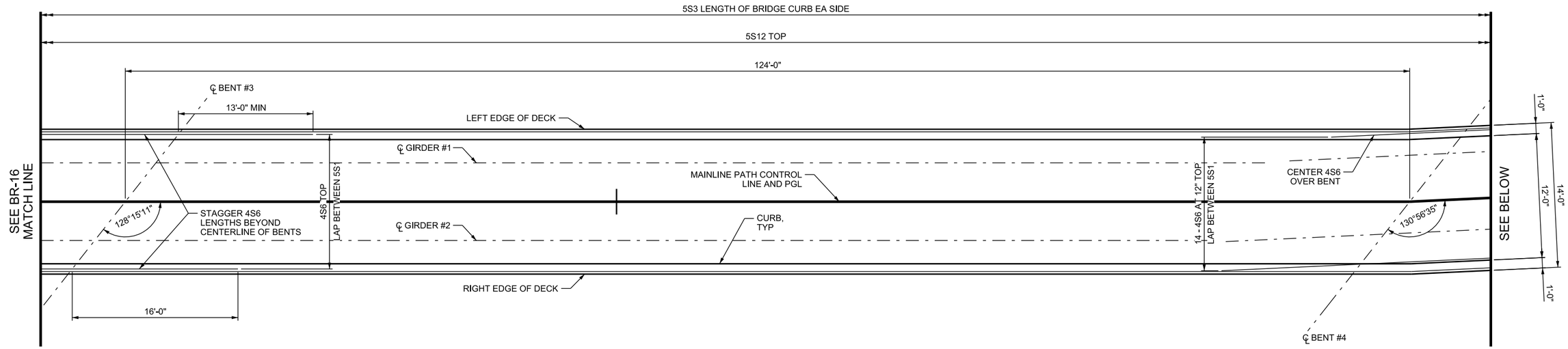

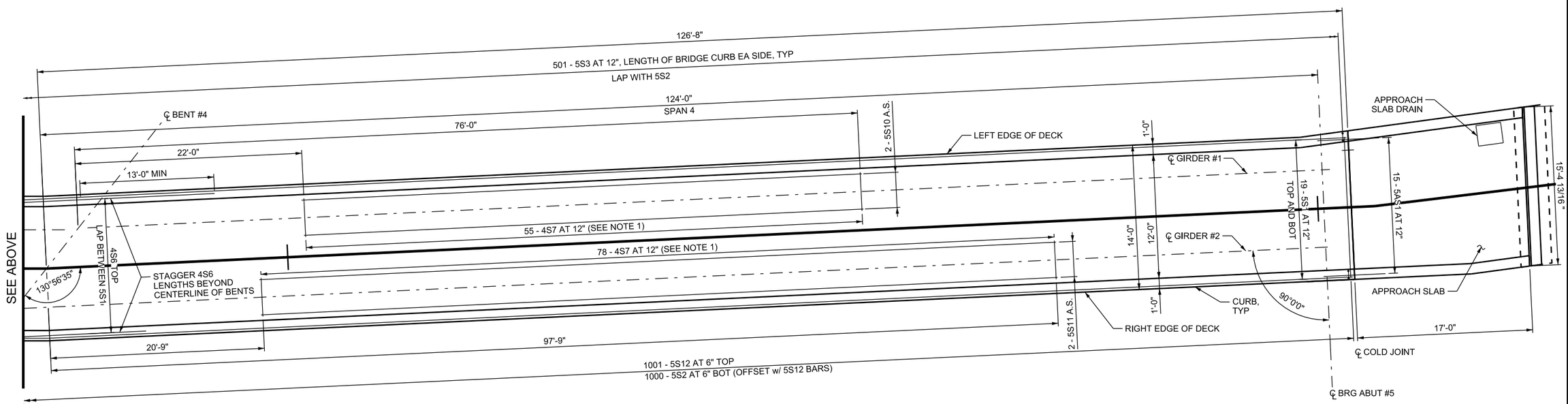

NOTE:

1. REFER TO "DECK SECTION" FOR HAUNCH REINFORCEMENT DETAIL.

REV	DATE	DESCRIPTION

Designed By: KGJ
Drawn By: DCV
Checked By: AFY
Approved By: ALK

CivilScience Engineers | Surveyors | Solutions

UTA

DECK PLAN 2 OF 2

LEHI CITY
LEH_OP_1
PED OVERPASS STRUCTURE - UDOT STR NO. F-923
SR-92 & DIGITAL DRIVE

CADD Filename: LEH OP 1-BR-17.dgn
UTA Contract No.: 18-2399TP
Drawing: BR-17
Sheet No.: 17 OF 31

DGN: Files\P_PxPro\8344489\LEH_OP_1-BR-17.dgn
03-MAR-2026

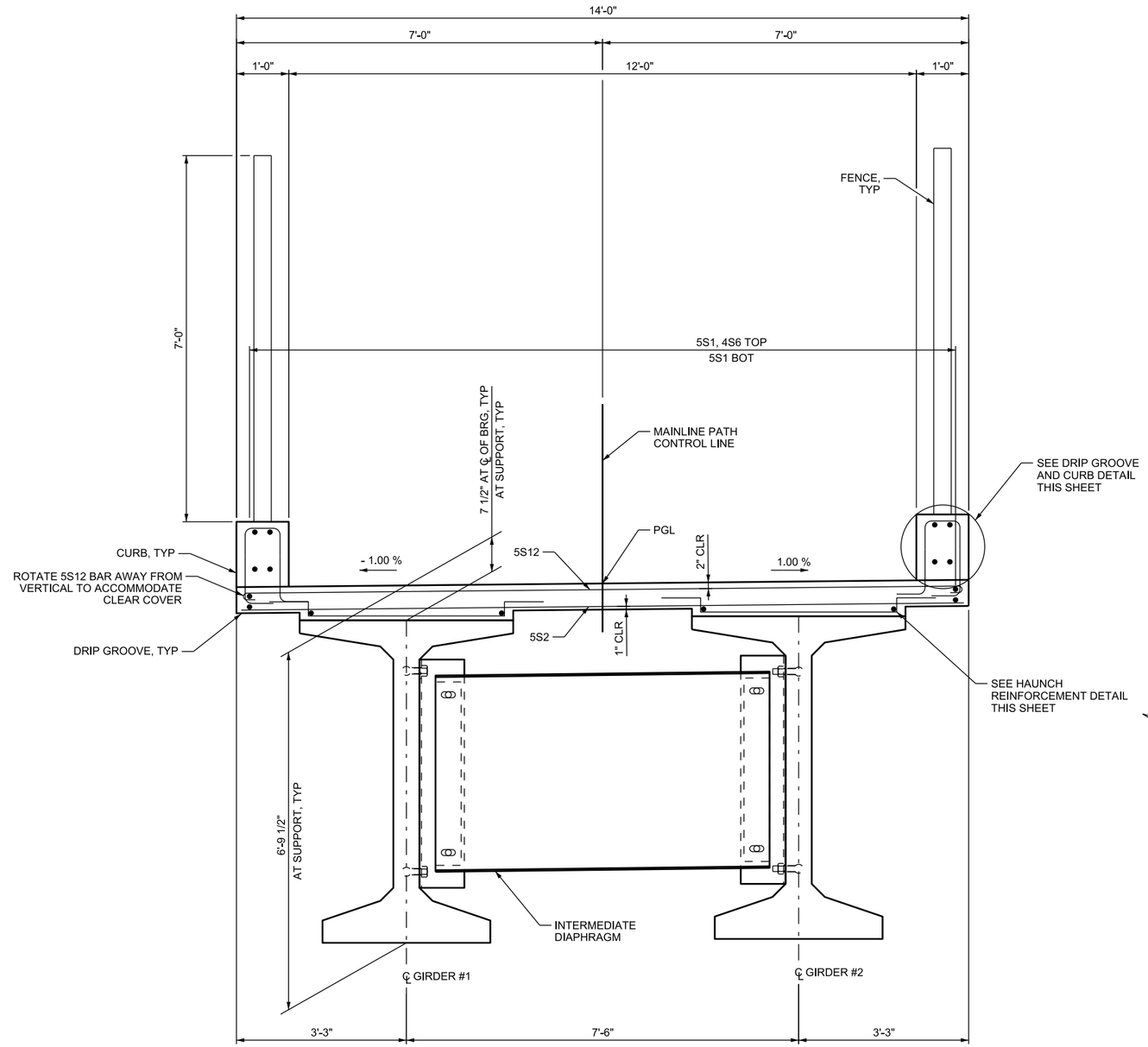

DECK SECTION

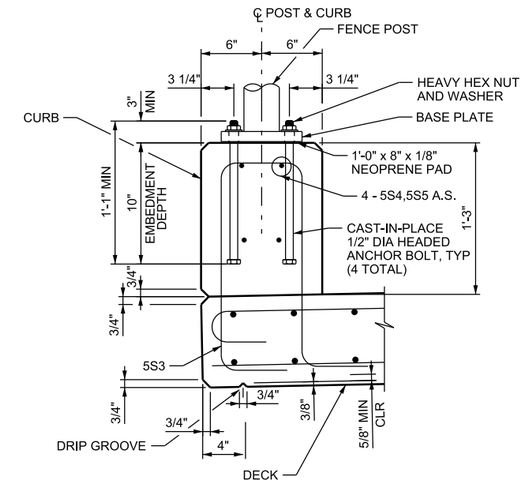

DRIP GROOVE AND CURB DETAIL

CAST-IN-PLACE ANCHORAGE SHOWN
SEE "FENCING DETAILS" FOR OPTIONS

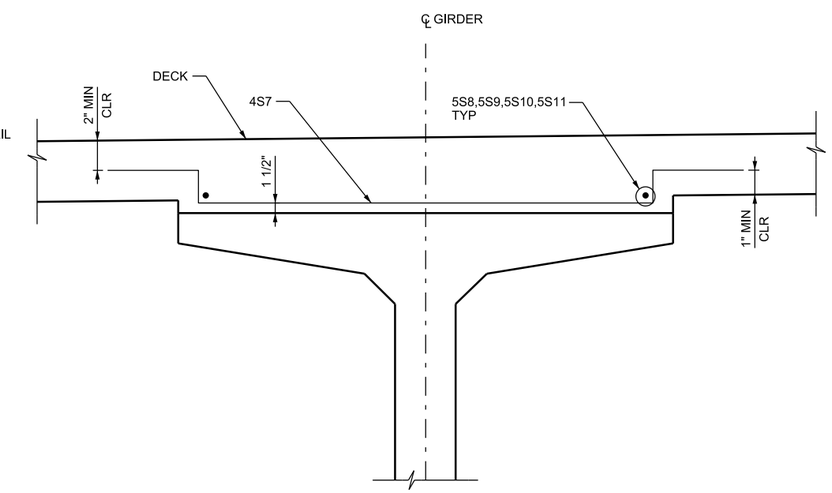

HAUNCH REINFORCEMENT DETAIL

DECK REINFORCEMENT NOT SHOWN FOR CLARITY

NOTES:

1. ROTATE 4S7 BARS AWAY FROM VERTICAL TO ACCOMMODATE TOP OF DECK CLEAR COVER.

REV	DATE	DESCRIPTION

Designed By: KGJ
Drawn By: DCV
Checked By: AFY
Approved By: ALK

CivilScience Engineers | Surveyors | Solutions

UTA

DECK SECTION

LEHI CITY
LEH_OP_1
PED OVERPASS STRUCTURE - UDOT STR NO. F-923
SR-92 & DIGITAL DRIVE

CADD Filename: LEH OP 1-BR-18.dgn
UTA Contract No.: 18-2399TP
Drawing: BR-18
Sheet No.: 18 OF 31

DGN File: P:\Projects\344489\LEH_OP_1-BR-18.dgn
03-MAR-2020

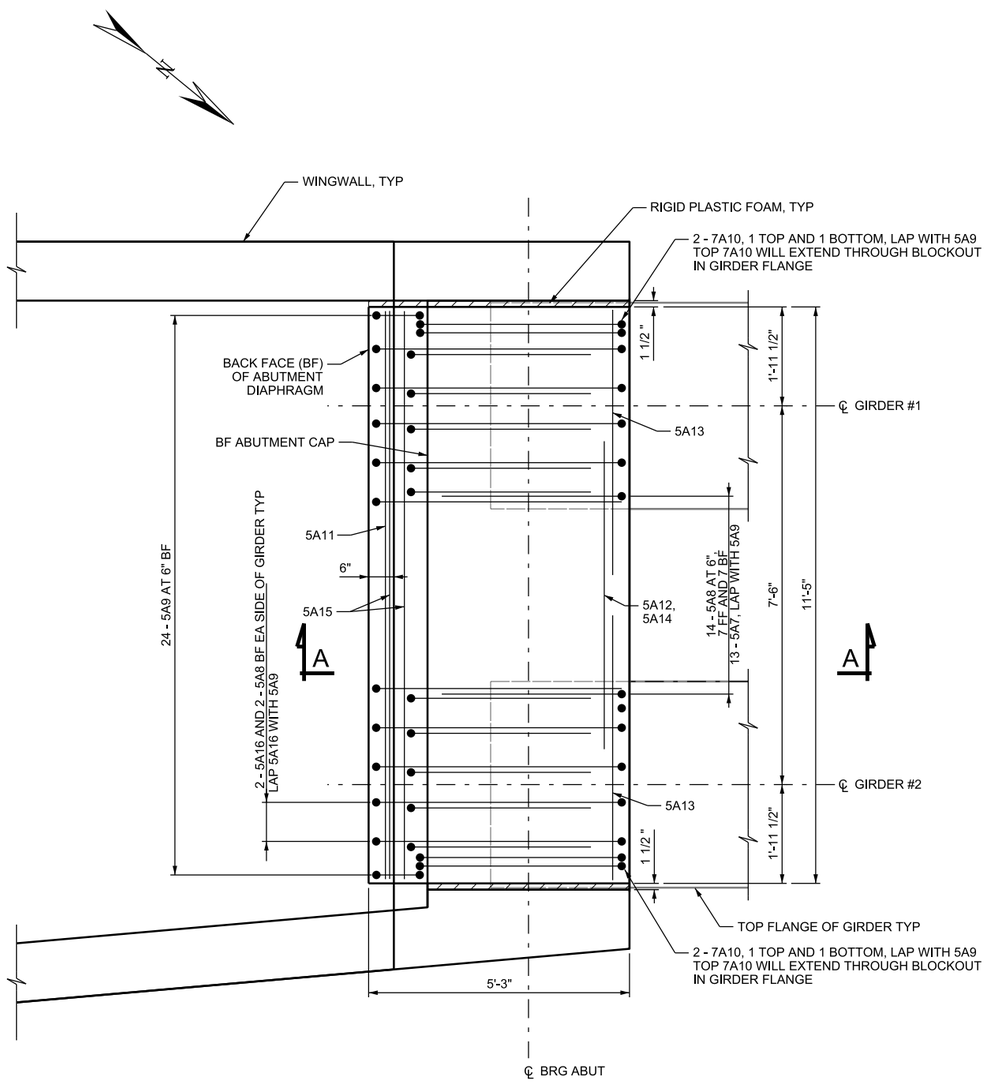

PLAN

ABUT #1 SHOWN, ABUT #5 SIMILAR

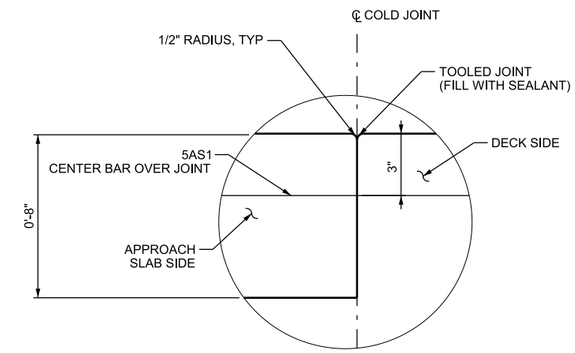

APPROACH SLAB JOINT DETAIL

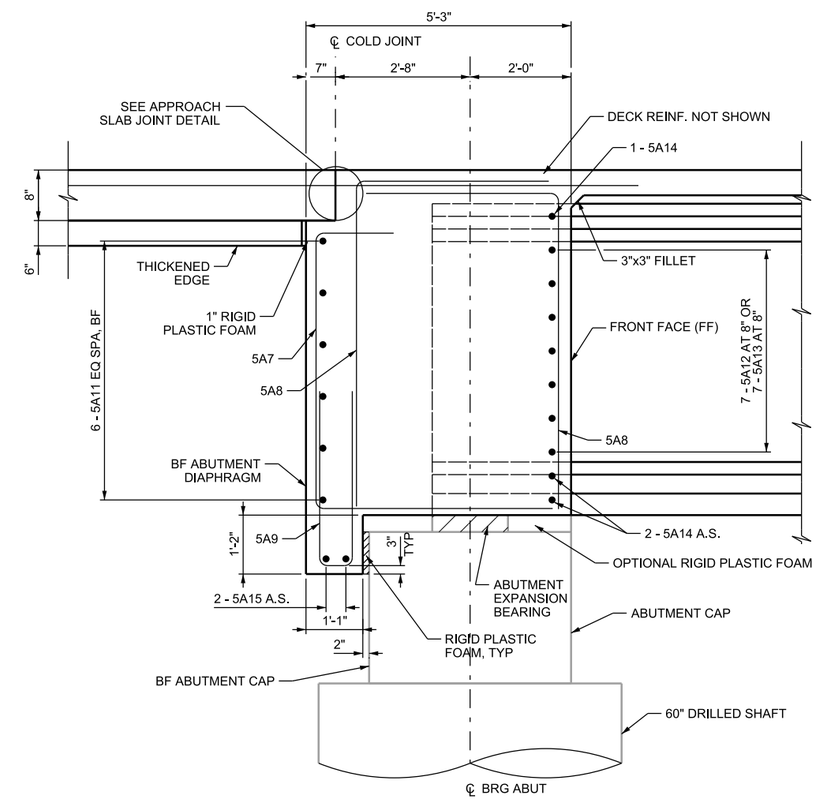

SECTION A-A

REV	DATE	DESCRIPTION

Designed By: TGG
Drawn By: DCV
Checked By: AFY
Approved By: ALK

CivilScience Engineers | Surveyors | Solutions

UTA

ABUTMENT DIAPHRAGM DETAILS

LEHI CITY
LEH_OP_1
PED OVERPASS STRUCTURE - UDOT STR NO. F-923
SR-92 & DIGITAL DRIVE

CADD Filename: LEH OP 1-BR-19.dgn
UTA Contract No.: 18-2399TP
Drawing: BR-19
Sheet No.: 19 OF 31

DGN Files:P:\Proj\0344489\LEH_OP_1-BR-19.dgn
03-MAR-2020

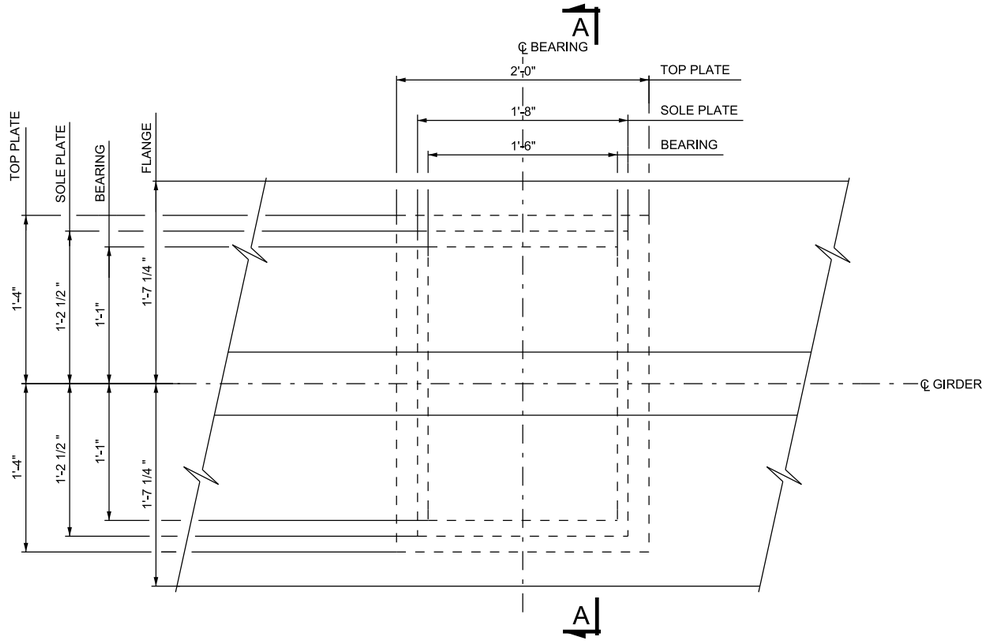

PLAN

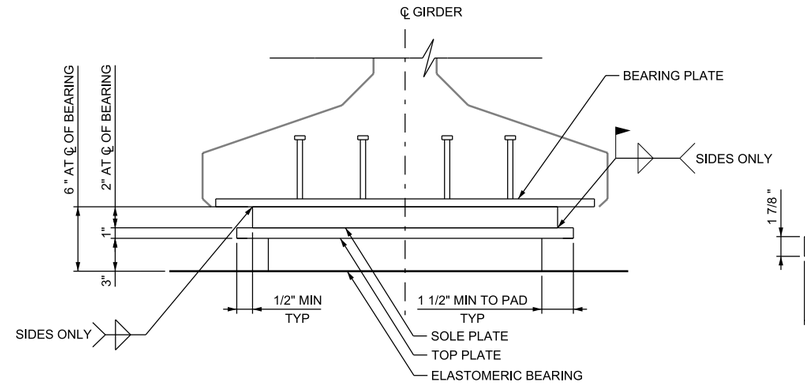

SECTION A-A

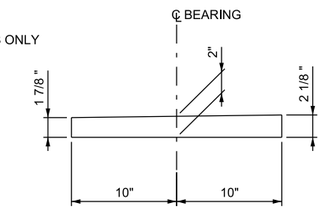

SOLE PLATE

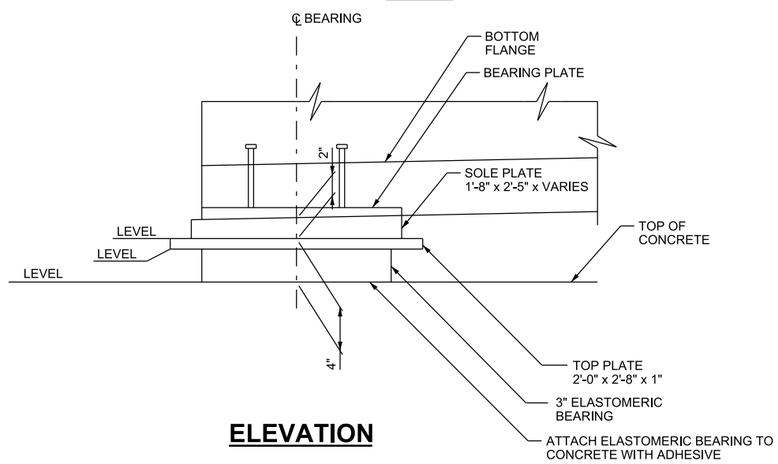

ELEVATION

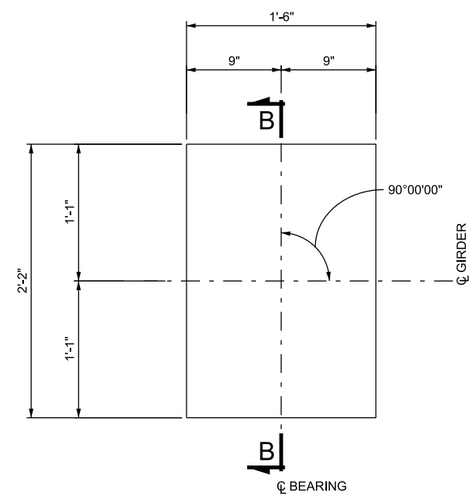

PLAN

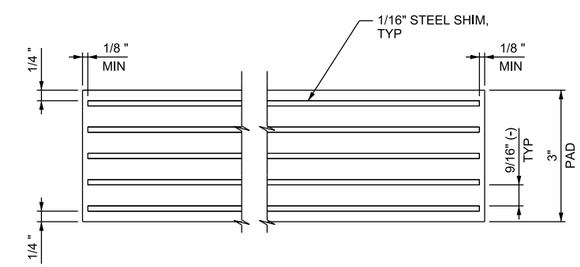

SECTION B-B

ELASTOMERIC BEARING

BEARING LOAD TABLE

LOCATION	DC ɣ = 1.00	DW ɣ = 1.00	LL WITHOUT IMPACT ɣ = 1.00	TEMPERATURE MOVEMENT ɣ = 1.00		SEISMIC MOVEMENT ɣ = 1.00		NUMBER OF BEARINGS
				LATERAL	LONGITUDINAL	LATERAL	LONGITUDINAL	
	KIPS	KIPS	KIPS	INCH	INCH	INCH	INCH	
ABUT #1	81.3	NA	46.9	NA	1.45	1.50	2.00	2
ABUT #5	113.7	NA	59.7	NA	1.40	1.50	2.00	2

NOTES

1. USE AASHTO M 270 GRADE 50 STRUCTURAL STEEL FOR SOLE PLATES AND TOP PLATES.
2. HOT BOND TOP PLATE TO THE ELASTOMERIC BEARING DURING VULCANIZATION.
3. USE 60 DUROMETER HARDNESS (SHORE A), GRADE 3 FOR ELASTOMER WITH SHEAR MODULUS BETWEEN 0.080 AND 0.175 KSI.
4. STEEL REINFORCED ELASTOMERIC BEARING DESIGNED USING METHOD B.
5. SEE 'UBT74 GIRDER DETAILS 2 OF 2" FOR BEARING PLATE DETAILS.

REV	DATE	DESCRIPTION

Designed By: TGG
Drawn By: DCV
Checked By: AFY
Approved By: ALK

CivilScience Engineers | Surveyors | Solutions

UTA

ABUTMENT EXPANSION BEARINGS

LEHI CITY
LEH_OP_1
PED OVERPASS STRUCTURE - UDOT STR NO. F-923
SR-92 & DIGITAL DRIVE

CADD Filename: LEH OP 1-BR-20.dgn
UTA Contract No.: 18-2399TP
Drawing: BR-20
Sheet No.: 20 OF 31

DGN File: IP-PWPw0344489\LEH_OP_1-BR-20.dgn
03-MAR-2020

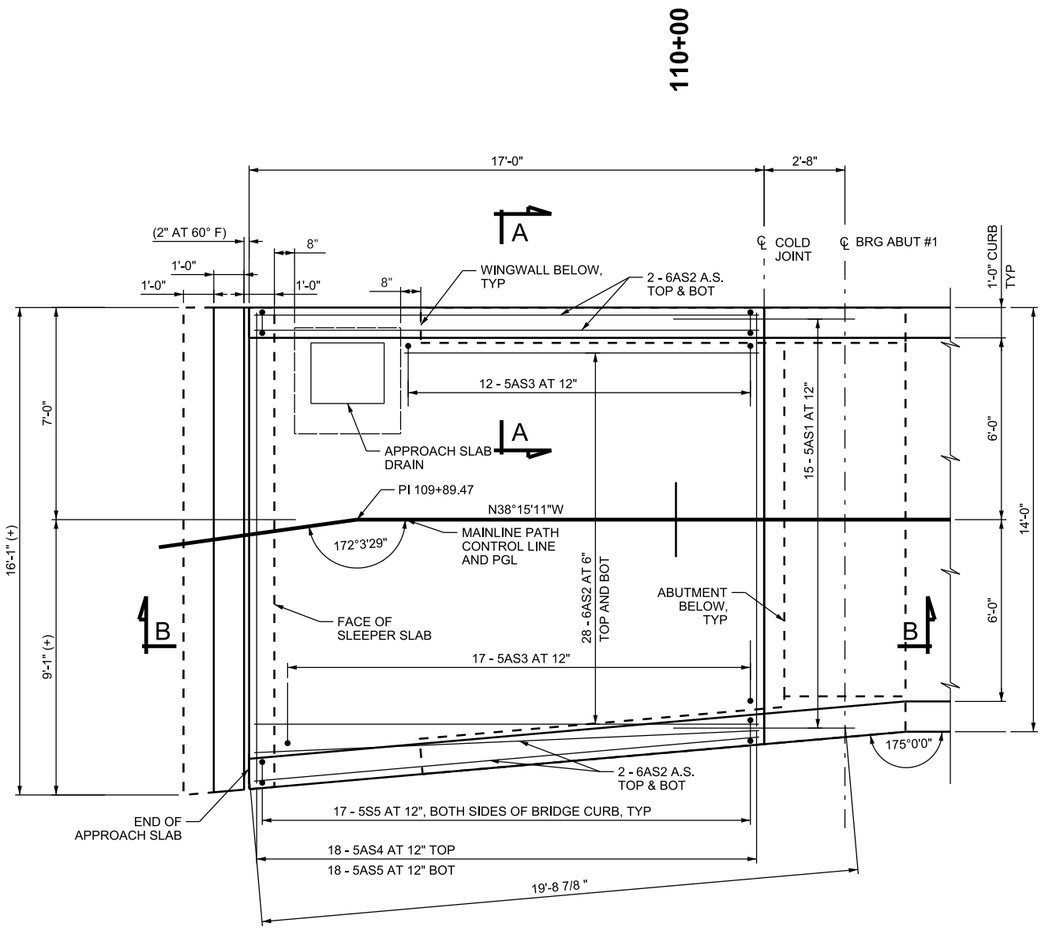

SOUTH APPROACH SLAB

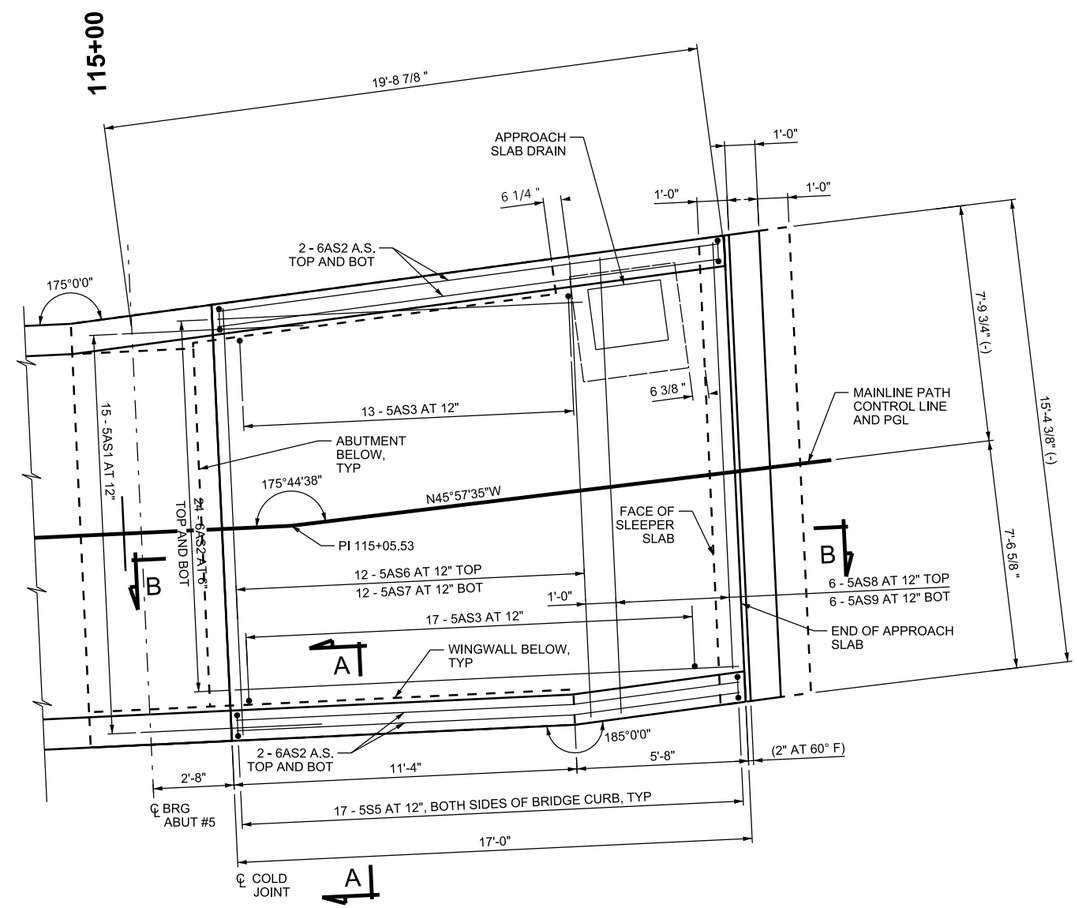

NORTH APPROACH SLAB

NOTES:

1. FIELD CUT OR BEND APPROACH SLAB REINFORCING TO CLEAR APPROACH SLAB DRAINS.
2. SEE "APPROACH SLAB DRAIN DETAILS" FOR LOCATIONS OF DRAINS.
3. SEE "APPROACH SLAB DETAILS" FOR SECTIONS A-A AND B-B.

QUANTITIES			
ITEM	LOCATION	EST QTY	UNIT
STRUCTURAL CONCRETE	SOUTH APPROACH SLAB (ABUT #1)	6.4	CU YD
STRUCTURAL CONCRETE	NORTH APPROACH SLAB (ABUT #5)	6.4	CU YD

REV	DATE	DESCRIPTION

Designed By: KGJ
Drawn By: DCV
Checked By: AFY
Approved By: ALK

CivilScience Engineers | Surveyors | Solutions

UTA

APPROACH SLAB PLAN

LEHI CITY
LEH_OP_1
PED OVERPASS STRUCTURE - UDOT STR NO. F-923
SR-92 & DIGITAL DRIVE

CADD Filename: LEH OP 1-BR-21.dgn
UTA Contract No.: 18-2399TP
Drawing: BR-21
Sheet No.: 21 OF 31

DGN File: P:\Proj\0344489\LEH_OP_1-BR-21.dgn
03-MAR-2020

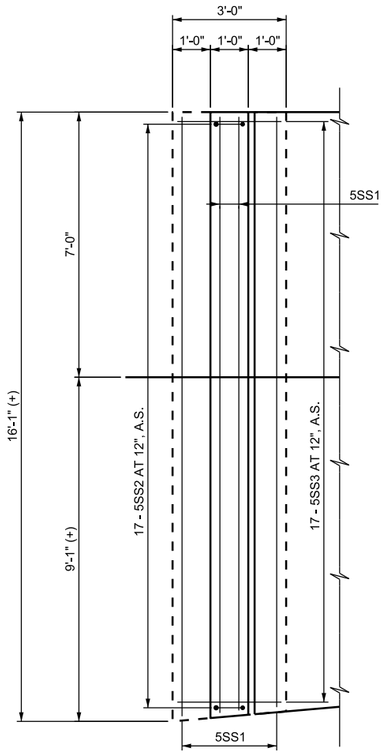

PLAN #1

SLEEPER SLAB #1

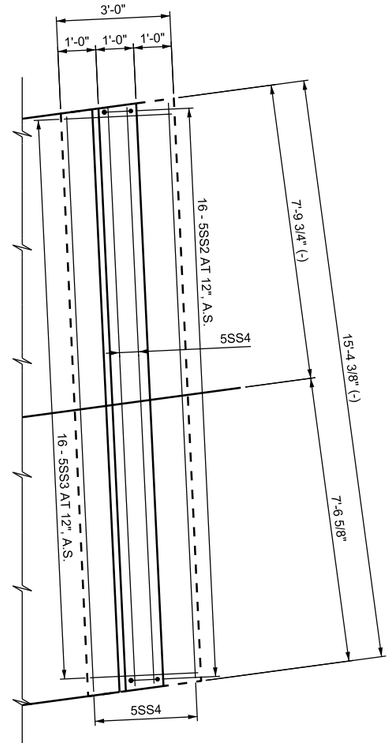

PLAN #5

SLEEPER SLAB #5

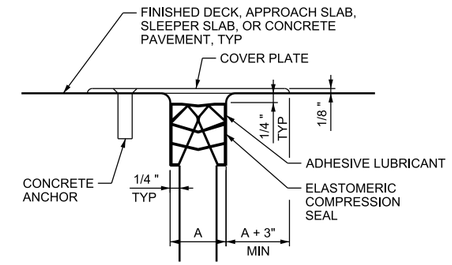

DETAIL A

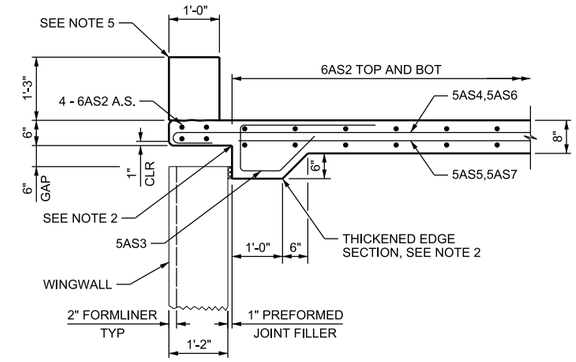

SECTION A-A

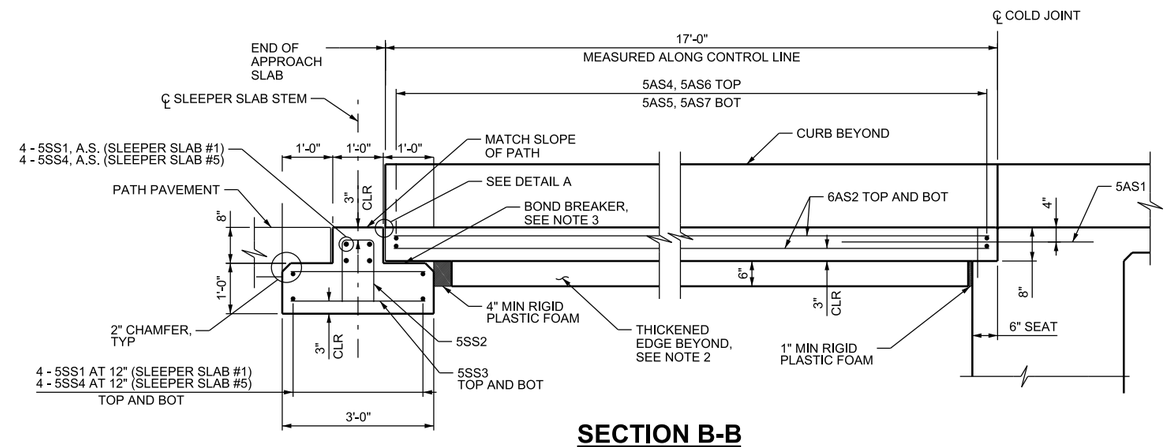

SECTION B-B

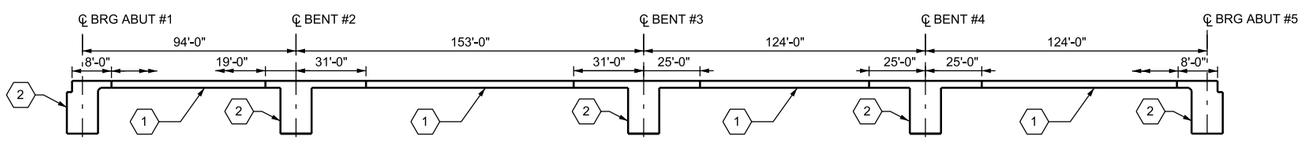

LONGITUDINAL DECK PLACING SEQUENCE

JOINT DATA TABLE

LOCATION	TOTAL FACTORED DESIGN MOVEMENT				DESIGN OPENINGS PERPENDICULAR TO JOINT			INSTALLATION LIMITS		DIMENSION A ADJUSTMENT PER 10°F
	RATED CAPACITY	IN DIRECTION OF MOVEMENT	PERPENDICULAR TO THE CENTERLINE OF THE JOINT	PARALLEL TO THE CENTERLINE OF THE JOINT	MAXIMUM OPENING, A_{MAX}	MINIMUM OPENING, A_{MIN}	OPENING AT SETTING TEMPERATURE, T=60°F, A_{SET}	MINIMUM INSTALLATION TEMPERATURE	MAXIMUM INSTALLATION TEMPERATURE	
	INCH	INCH	INCH	INCH	INCH	INCH	INCH	°F	°F	INCH
ABUT #1	4.0	2.09	2.09	0.0	4.13	1.00	2.00	40	80	0.19
ABUT #5	4.0	2.09	2.06	1.35	3.33	1.00	2.00	40	80	0.19

DECK PLACING NOTES

1. (2) DESIGNATES PLACING SEQUENCE.
2. ⟶ ARROWS DESIGNATE DIRECTION OF PLACEMENT.
3. SEQUENCE (1) AND (2) MAY BE COMBINED.
4. IF SEQUENCE (1) AND (2) ARE NOT COMBINED, DO NOT PLACE SEQUENCE (2) UNTIL SEQUENCE (1) HAS CURED FOR A MINIMUM OF 3 DAYS.
5. IF DECK PLACEMENT OPERATIONS MUST BE HALTED, FINISH THE ENTIRETY OF A SEQUENCE (1) SECTION. DO NOT PLACE A SEQUENCE (2) SECTION IF BOTH ADJACENT SEQUENCE (1) SECTIONS CANNOT BE PLACED CONCURRENTLY.

NOTES

1. SEE "APPROACH SLAB PLAN" FOR LOCATIONS OF SECTIONS A-A AND B-B.
2. EXTEND THICKENED EDGE AS SHOWN WHEN NO APPROACH SLAB DRAIN IS PRESENT. EXTEND THICKENED EDGE TO APPROACH SLAB DRAIN WHEN THE APPROACH SLAB DRAIN IS PRESENT. SEE SECTION B-B ON "APPROACH SLAB DRAIN DETAILS" FOR DETAILS OF APPROACH SLAB DEPTH OVER APPROACH SLAB CATCH BASIN.
3. PLACE BOND BREAKER OVER ENTIRE SURFACE BETWEEN APPROACH SLAB AND SLEEPER SLAB.
4. INSTALL JOINT IN STRICT CONFORMANCE WITH MANUFACTURER'S INSTRUCTIONS.
5. SEE "DECK SECTION" FOR CURB DETAIL REINFORCEMENT.

REV	DATE	DESCRIPTION

Designed By: KGJ
Drawn By: DCV
Checked By: AFY
Approved By: ALK

CivilScience Engineers | Surveyors | Solutions

UTA

APPROACH SLAB DETAILS

LEHI CITY
LEH_OP_1
PED OVERPASS STRUCTURE - UDOT STR NO. F-923
SR-92 & DIGITAL DRIVE

CADD Filename: LEH_OP_1-BR-22.dgn
UTA Contract No.: 18-2399TP
Drawing: BR-22
Sheet No.: 22 OF 31

DGN File: P:\Proj\02344489\LEH_OP_1-BR-22.dgn
03-MAR-2020

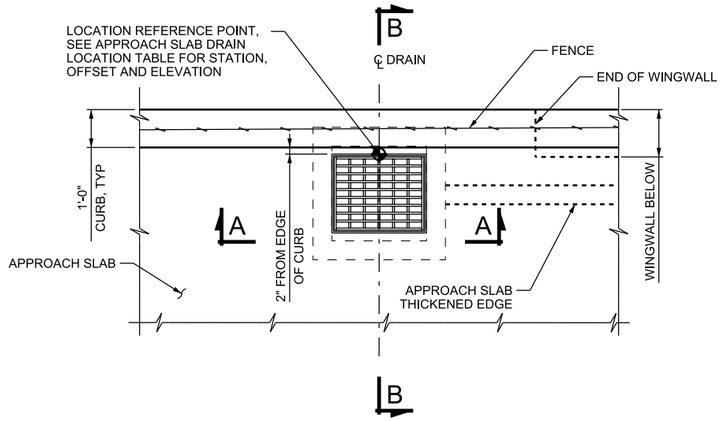

TYPICAL PLAN

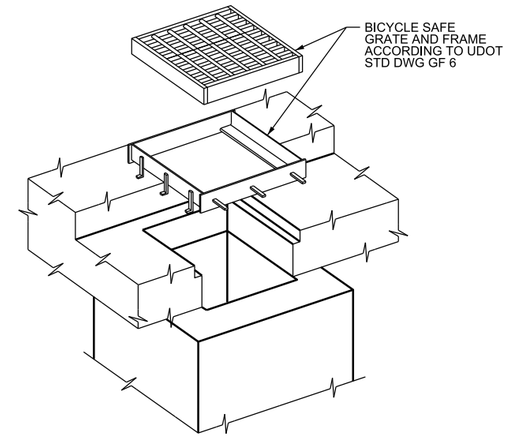

ISOMETRIC

APPROACH SLAB DRAIN LOCATION TABLE				
DRAINAGE PLANS DESIGNATION	STATION	OFFSET (FEET)	TOP OF GRATE ELEVATION (FEET)	BOX INVERT ELEVATION (FEET)
CB 02-03	109+89.47	5.84 LT	4726.26	4722.47
CB 03-01	115+17.40	6.57 LT	4723.89	4718.38

ITEM	LOCATION	EST QTY	UNIT
STRUCTURAL CONCRETE CLASS AA (AE)	APPROACH SLAB DRAIN	2.2	CU YD
STRUCTURAL STEEL	APPROACH SLAB DRAIN	358	LB

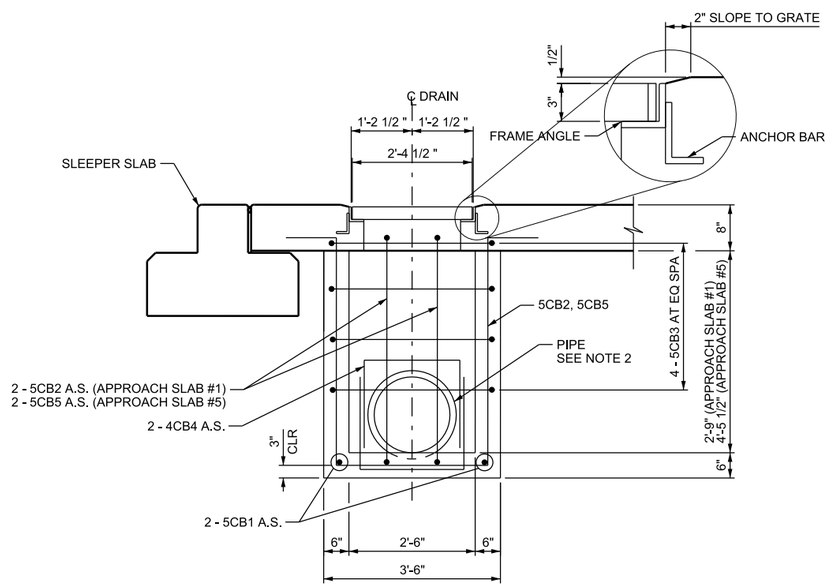

SECTION A-A

CURB NOT SHOWN

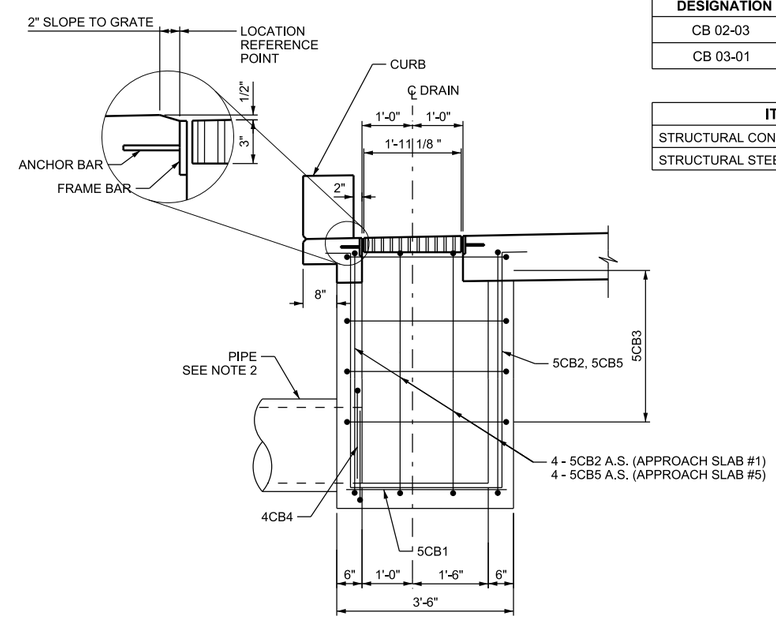

SECTION B-B

NOTES

1. FIELD CUT OR BEND REINFORCING STEEL TO CLEAR APPROACH SLAB DRAINS OR PIPE INLETS.
2. SEE DRAINAGE PLANS AND PROFILES FOR PIPE SIZES AND ADDITIONAL INFORMATION.
3. SEE "APPROACH SLAB PLAN" FOR APPROACH SLAB DRAIN LOCATIONS.

REV	DATE	DESCRIPTION

Designed By: KGJ
Drawn By: DCV
Checked By: AFY
Approved By: ALK

CivilScience Engineers | Surveyors | Solutions

UTA

APPROACH SLAB DRAIN DETAILS

LEHI CITY
LEH_OP_1
PED OVERPASS STRUCTURE - UDOT STR NO. F-923
SR-92 & DIGITAL DRIVE

CADD Filename: LEH_OP_1-BR-23.dgn
UTA Contract No.: 18-2399TP
Drawing: BR-23
Sheet No.: 23 OF 31

DGN File:P:\Proj\0344489\LEH_OP_1-BR-23.dgn
03-MAR-2020

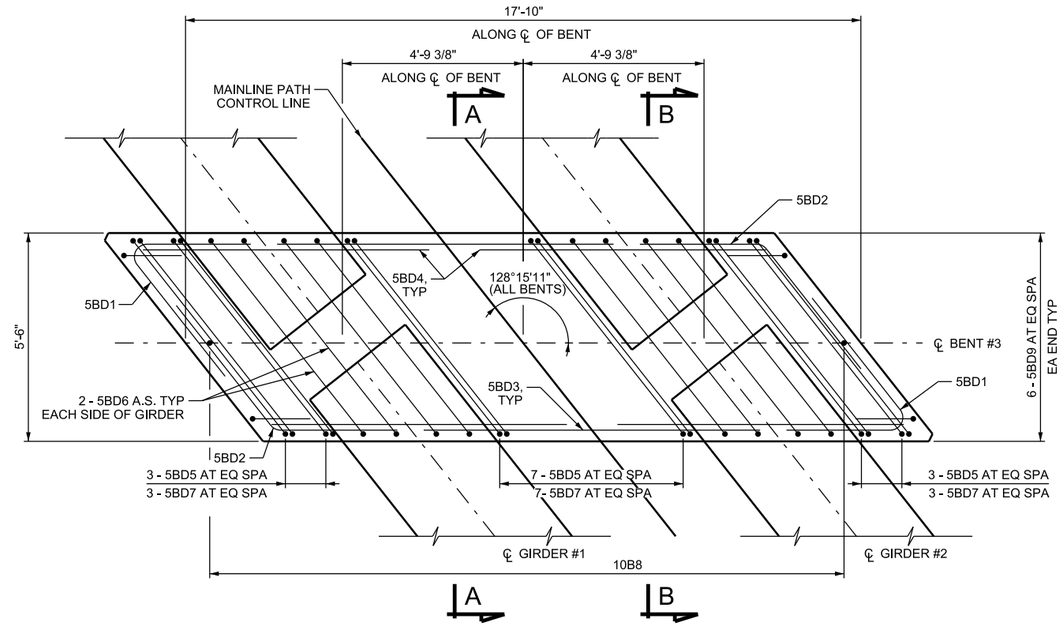

PLAN

PARAPET AND DECK NOT SHOWN FOR CLARITY
BENT #3 SHOWN, BENT #2 AND #4 SIMILAR

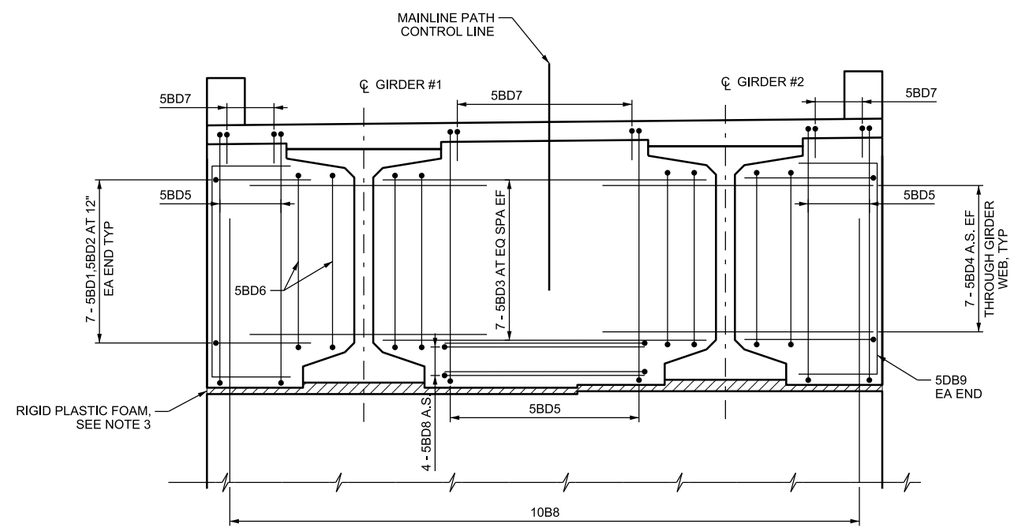

ELEVATION

BENT #3 SHOWN, BENT #2 AND #4 SIMILAR

NOTES;

1. SEE "BENT DIAPHRAGM DETAILS 2 OF 2" FOR SECTIONS A-A AND B-B.
2. STEEL REINFORCING IN DECK AND PARAPET NOT SHOWN FOR CLARITY.
3. PLACE RIGID PLASTIC FOAM BETWEEN BENT CAP AND BENT DIAPHRAGM. SEE "BENT DIAPHRAGM DETAILS 2 OF 2" FOR EXTENT.

QUANTITIES			
ITEM	LOCATION	EST QTY	UNIT
STRUCTURAL CONCRETE	BENT #2 DIAPHRAGM	21.3	CU YD
STRUCTURAL CONCRETE	BENT #3 DIAPHRAGM	21.3	CU YD
STRUCTURAL CONCRETE	BENT #4 DIAPHRAGM	21.3	CU YD

REV	DATE	DESCRIPTION

Designed By: TGG
Drawn By: DCV
Checked By: AFY
Approved By: ALK

CivilScience Engineers | Surveyors | Solutions

UTA

BENT DIAPHRAGM DETAILS 1 OF 2

LEHI CITY
LEH_OP_1
PED OVERPASS STRUCTURE - UDOT STR NO. F-923
SR-92 & DIGITAL DRIVE

CADD Filename: LEH OP 1-BR-24.dgn
UTA Contract No.: 18-2399TP
Drawing: BR-24
Sheet No.: 24 OF 31

DGN File: IP_PWPrd@344489\LEH_OP_1-BR-24.dgn
03-MAR-2020

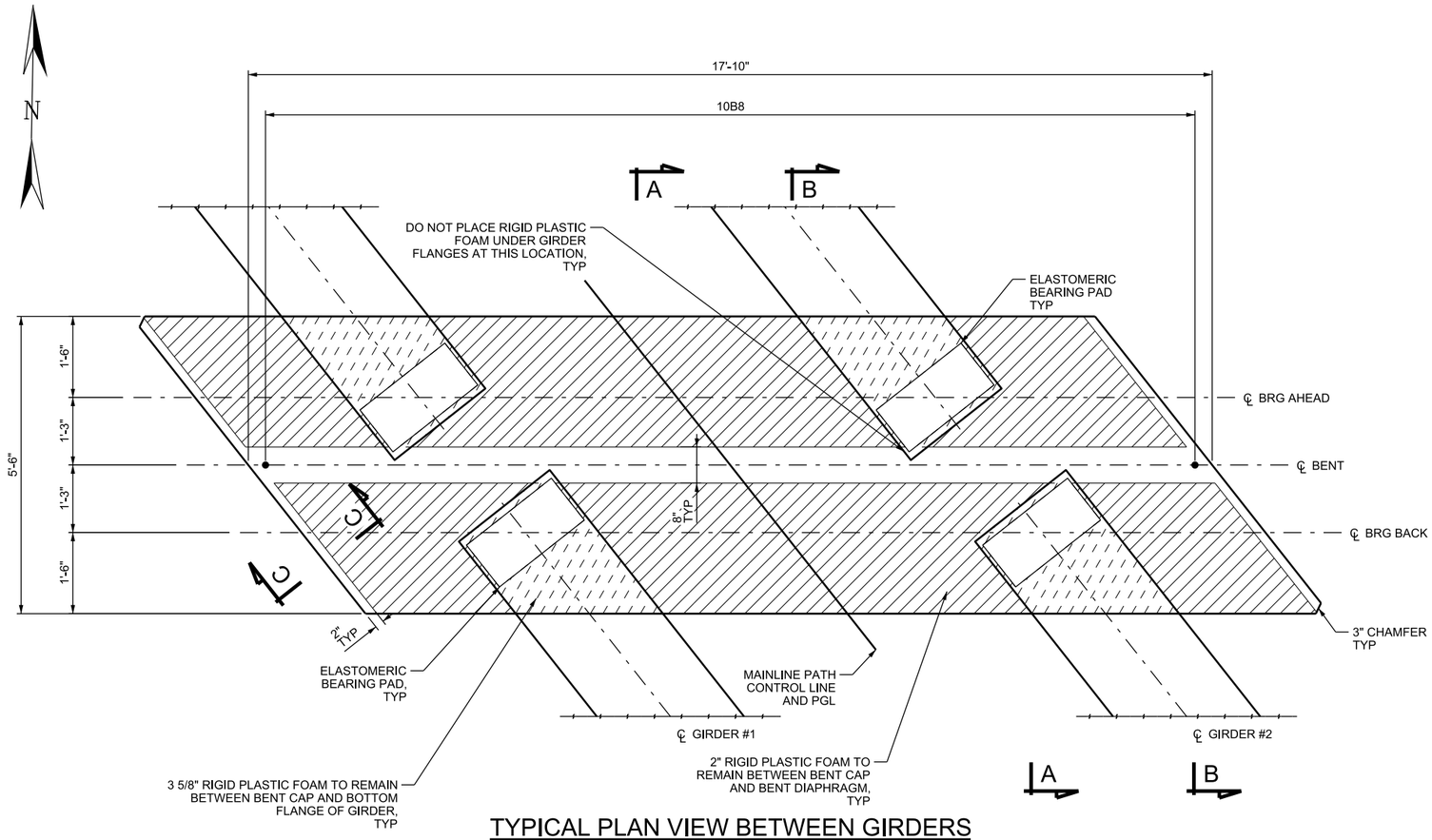

TYPICAL PLAN VIEW BETWEEN GIRDERS

EXTENDE GIRDER STRANDS NOT SHOWN

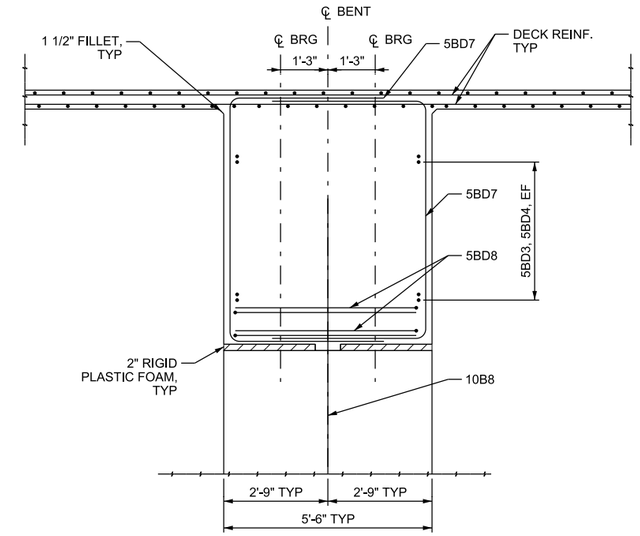

SECTION A-A

BETWEEN GIRDERS

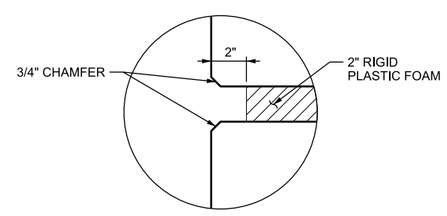

SECTION C-C

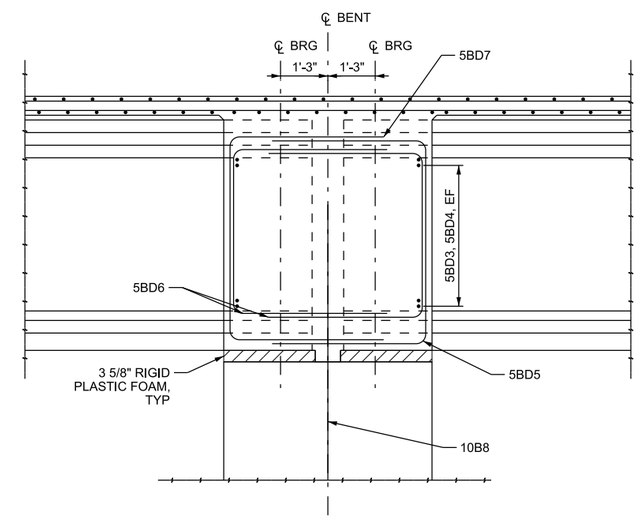

SECTION B-B

AT GIRDERS

NOTES

1. SEE "BENT DIAPHRAGM DETAILS 1 OF 2" FOR LOCATION OF SECTIONS A-A AND B-B.

REV	DATE	DESCRIPTION

Designed By: TGG
Drawn By: DCV
Checked By: AFY
Approved By: ALK

CivilScience Engineers | Surveyors | Solutions

UTA

BENT DIAPHRAGM DETAILS 2 OF 2

LEHI CITY
LEH_OP_1
PED OVERPASS STRUCTURE - UDOT STR NO. F-923
SR-92 & DIGITAL DRIVE

CADD Filename: LEH OP 1-BR-25.dgn
UTA Contract No.: 18-2399TP
Drawing: BR-25
Sheet No.: 25 OF 31

DGN File: IP_PWP:d0344489\LEH_OP_1-BR-25.dgn
03-MAR-2020

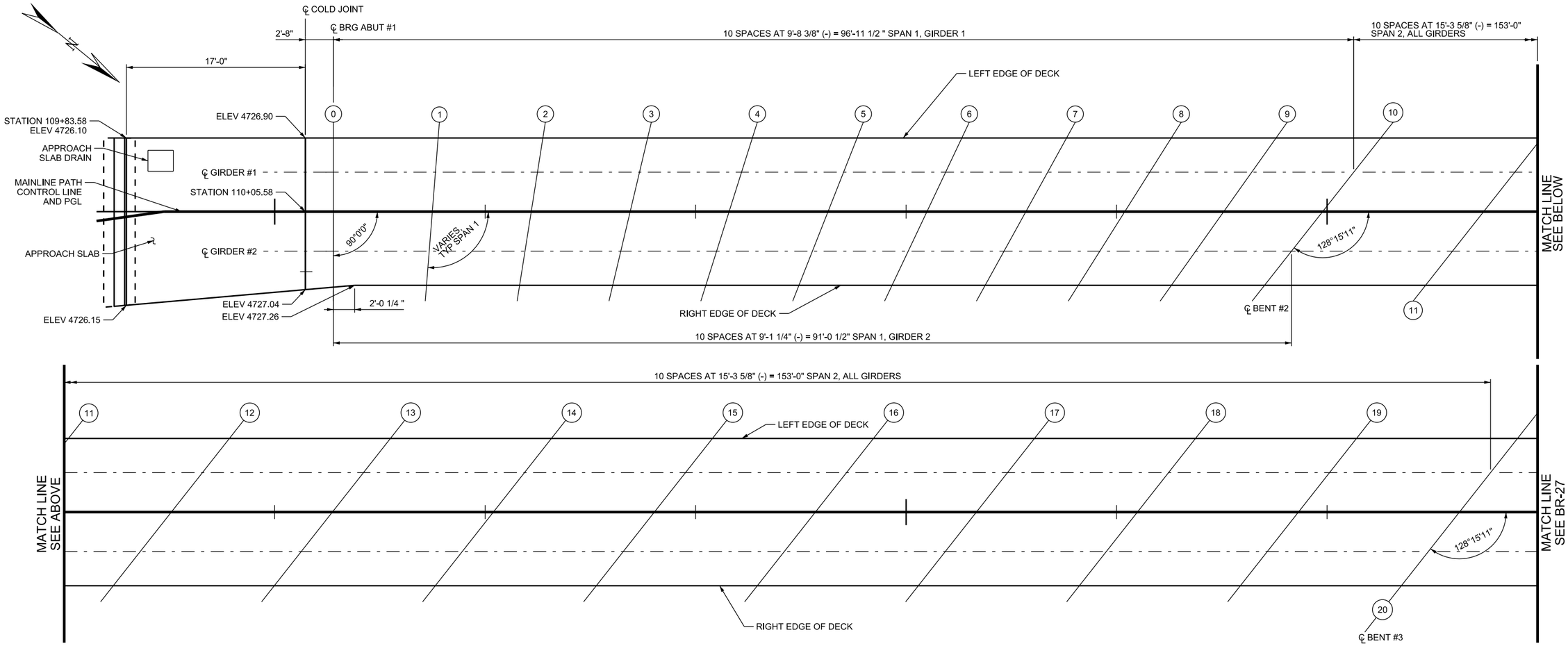

SCREED ELEVATIONS TABLE													
SPAN #1													
		0	1	2	3	4	5	6	7	8	9	10	UNITS
LEFT EOD	ELEV	4727.03	4727.48	4727.89	4728.26	4728.60	4728.90	4729.16	4729.39	4729.58	4729.73	4729.84	FT
GIRDER #1	ELEV	4727.06	4727.50	4727.90	4728.27	4728.60	4728.90	4729.16	4729.38	4729.57	4729.73	4729.85	FT
	DL Δ	0.00	0.02	0.03	0.04	0.05	0.05	0.05	0.04	0.03	0.02	0.00	FT
GIRDER #2	ELEV	4727.14	4727.55	4727.93	4728.28	4728.60	4728.88	4729.14	4729.37	4729.56	4729.72	4729.85	FT
	DL Δ	0.00	0.01	0.02	0.03	0.04	0.04	0.04	0.03	0.02	0.01	0.00	FT
RIGHT EOD	ELEV	4727.17	4727.57	4727.94	4728.28	4728.60	4728.88	4729.13	4729.36	4729.55	4729.72	4729.85	FT

SCREED ELEVATIONS TABLE													
SPAN #2													
		10	11	12	13	14	15	16	17	18	19	20	UNITS
LEFT EOD	ELEV	4729.84	4729.95	4730.02	4730.10	4730.18	4730.25	4730.33	4730.41	4730.48	4730.56	4730.57	FT
GIRDER #1	ELEV	4729.85	4729.97	4730.04	4730.12	4730.20	4730.27	4730.35	4730.43	4730.50	4730.58	4730.62	FT
	DL Δ	0.00	0.10	0.20	0.27	0.32	0.34	0.32	0.27	0.20	0.10	0.00	FT
GIRDER #2	ELEV	4729.85	4730.01	4730.09	4730.16	4730.24	4730.32	4730.39	4730.47	4730.55	4730.63	4730.70	FT
	DL Δ	0.00	0.10	0.20	0.27	0.32	0.34	0.32	0.27	0.20	0.10	0.00	FT
RIGHT EOD	ELEV	4729.85	4730.02	4730.11	4730.18	4730.26	4730.34	4730.41	4730.49	4730.57	4730.65	4730.72	FT

NOTES:

1. FINAL TOP OF CONCRETE DECK ELEVATIONS ARE SHOWN. ADD DEAD LOAD DEFLECTIONS TO THE TOP OF CONCRETE DECK ELEVATIONS TO OBTAIN SCREED ELEVATIONS.
2. ALL ELEVATIONS AND DEAD LOAD DEFLECTION VALUES ARE SHOWN IN FEET.
3. SCREED ELEVATIONS ARE PROVIDED AT INTERSECTION OF CENTERLINE OF GIRDER AND SCREED LINE.

REV	DATE	DESCRIPTION

Designed By: KGJ
Drawn By: DCV
Checked By: AFY
Approved By: ALK

CivilScience Engineers | Surveyors | Solutions

UTA

SCREED ELEVATIONS 1 OF 2

LEHI CITY
LEH_OP_1
PED OVERPASS STRUCTURE - UDOT STR NO. F-923
SR-92 & DIGITAL DRIVE

CADD Filename: LEH OP 1-BR-26.dgn
UTA Contract No.: 18-2399TP
Drawing: BR-26
Sheet No.: 26 OF 31

DGN File: P:\PPx\834449\LEH_OP_1-BR-26.dgn
03-MAR-2020

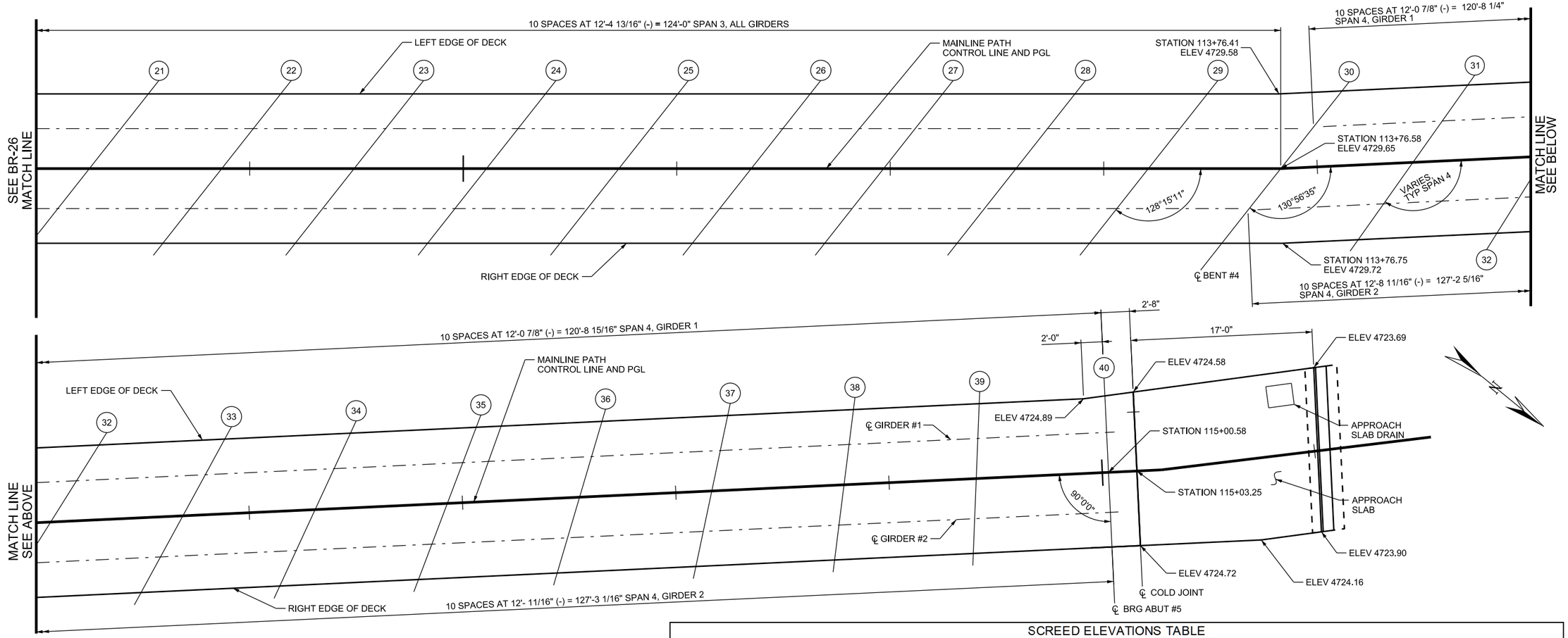

SCREED ELEVATIONS TABLE													
SPAN #3													
		20	21	22	23	24	25	26	27	28	29	30	UNITS
LEFT EOD	ELEV	4730.57	4730.49	4730.41	4730.33	4730.25	4730.17	4730.08	4730.00	4729.88	4729.70	4729.47	FT
GIRDER #1	ELEV	4730.62	4730.54	4730.46	4730.38	4730.30	4730.22	4730.13	4730.05	4729.94	4729.78	4729.56	FT
	DL Δ	0.00	0.04	0.08	0.11	0.13	0.13	0.13	0.11	0.08	0.04	0.00	FT
GIRDER #2	ELEV	4730.70	4730.66	4730.57	4730.49	4730.41	4730.33	4730.25	4730.17	4730.08	4729.94	4729.74	FT
	DL Δ	0.00	0.04	0.08	0.11	0.13	0.13	0.13	0.11	0.08	0.04	0.00	FT
RIGHT EOD	ELEV	4730.72	4730.70	4730.62	4730.54	4730.46	4730.38	4730.30	4730.22	4730.13	4730.00	4729.82	FT

SCREED ELEVATIONS TABLE													
SPAN #4													
		30	31	32	33	34	35	36	37	38	39	40	UNITS
LEFT EOD	ELEV	4729.47	4729.20	4728.87	4728.50	4728.07	4727.59	4727.07	4726.49	4725.90	4725.31	4724.72	FT
GIRDER #1	ELEV	4729.56	4729.29	4728.97	4728.59	4728.16	4727.68	4727.15	4726.56	4725.96	4725.35	4724.75	FT
	DL Δ	0.00	0.04	0.08	0.12	0.14	0.15	0.14	0.12	0.08	0.04	0.00	FT
GIRDER #2	ELEV	4729.74	4729.49	4729.17	4728.80	4728.37	4727.88	4727.33	4726.72	4726.09	4725.46	4724.82	FT
	DL Δ	0.00	0.05	0.10	0.14	0.17	0.18	0.17	0.14	0.10	0.05	0.00	FT
RIGHT EOD	ELEV	4729.82	4729.57	4729.26	4728.89	4728.46	4727.96	4727.41	4726.79	4726.15	4725.50	4724.86	FT

NOTES:

1. FINAL TOP OF CONCRETE DECK ELEVATIONS ARE SHOWN. ADD DEAD LOAD DEFLECTIONS TO THE TOP OF CONCRETE DECK ELEVATIONS TO OBTAIN SCREED ELEVATIONS.
2. ALL ELEVATIONS AND DEAD LOAD DEFLECTION VALUES ARE SHOWN IN FEET.
3. SCREED ELEVATIONS ARE PROVIDED AT INTERSECTION OF CENTERLINE OF GIRDER AND SCREED LINE.

REV	DATE	DESCRIPTION

Designed By: KGJ
Drawn By: DCV
Checked By: AFY
Approved By: ALK

CivilScience Engineers | Surveyors | Solutions

UTA

SCREED ELEVATIONS 2 OF 2

LEHI CITY
LEH_OP_1
PED OVERPASS STRUCTURE - UDOT STR NO. F-923
SR-92 & DIGITAL DRIVE

CADD Filename: LEH OP 1-BR-27.dgn
UTA Contract No.: 18-2399TP
Drawing: BR-27
Sheet No.: 27 OF 31

DGN File:IP-PWPw0344489\LEH_OP_1-BR-27.dgn
03-MAR-2020

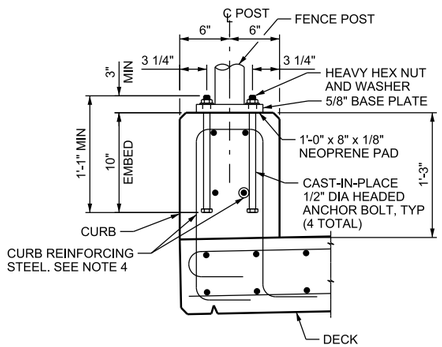

FENCE POST INSTALLATION

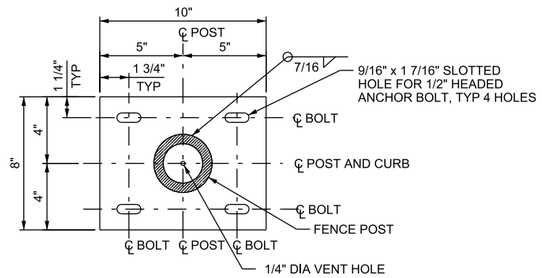

BASE PLATE PLAN

CAST-IN-PLACE ANCHORAGE OPTION

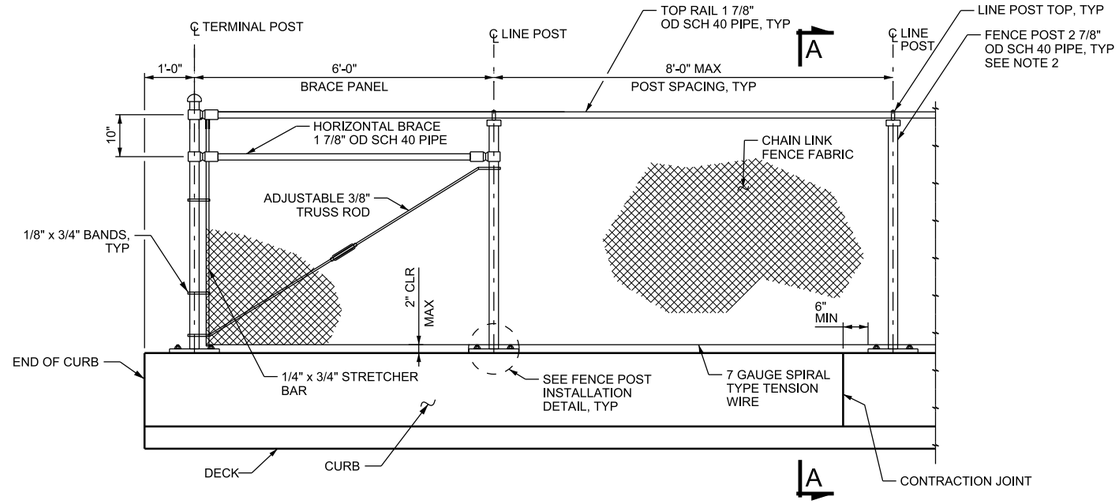

ELEVATION

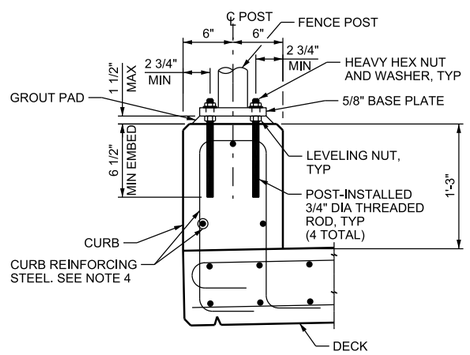

FENCE POST INSTALLATION

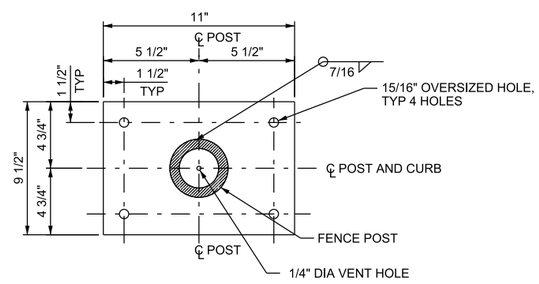

BASE PLATE PLAN

POST-INSTALLED ANCHORAGE OPTION

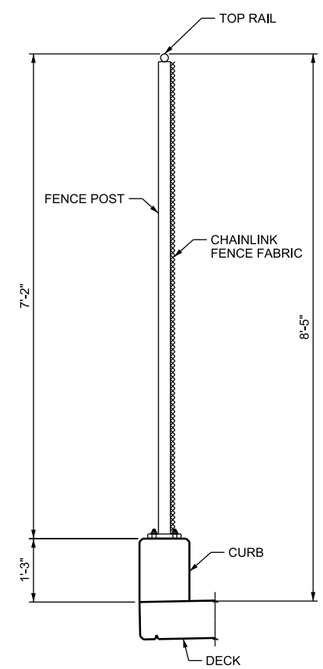

SECTION A-A

NOTES

1. FENCE POSTS ARE PLUMB.
2. SEE UDOT STD DWG FG 6 FOR DETAILS NOT SHOWN.
3. CONTRACTOR IS RESPONSIBLE FOR LOCATION AND PLUMBNESS OF ANCHOR BOLTS.
4. ADJUST CURB REINFORCING STEEL TO AVOID ANCHOR BOLT OR THREADED ROD LOCATIONS. MAINTAIN MAXIMUM POST SPACING. SEE "DECK SECTION" SHEET FOR CURB DETAIL. CONTRACTOR IS RESPONSIBLE FOR ENSURING POST-INSTALLED ANCHORS DO NOT CONFLICT WITH CURB REINFORCEMENT.
5. LOCATE TERMINAL POSTS AT DISCONTINUOUS ENDS OF FENCE AND AT LOCATIONS OF DISCRETE ANGLE CHANGE GREATER THAN 15° HORIZONTALLY OR VERTICALLY. PROVIDE BRACE PANELS ON BOTH SIDES OF TERMINAL POST AS APPLICABLE.
6. INSTALL NUTS FOR EXPANSION RAILS FINGER-TIGHT. NUTS FULLY ENGAGE BOLT WITH A MINIMUM OF ONE BOLT THREAD EXTENDING BEYOND THE NUT. DISTORT THE FIRST THREAD ON THE OUTSIDE OF THE NUT TO PREVENT LOOSENING.
7. BLACK POWDER COAT FENCE COMPONENTS AFTER FABRICATION. COLOR FENCE ACCORDING TO AMS-STD-595A COLOR NO. 27038.
8. PROVIDE CHAINLINK FENCE FABRIC WITH 1 INCH MESH SIZE.
9. PROVIDE POST-INSTALLED THREADED RODS AND EPOXY ANCHOR SYSTEM THAT IS CAPABLE OF PROVIDING 7.7 KIPS OF FACTORED AXIAL TENSION RESISTANCE AS A GROUP (2 ANCHORS IN TENSION AND 2 ANCHORS IN COMPRESSION). USE ASTM F1554 GRADE 55 (MINIMUM) MATERIAL THAT IS HOT-DIP GALVANIZED ACCORDING TO ASTM A 123.

REV	DATE	DESCRIPTION

Designed By: KGJ
Drawn By: DCV
Checked By: AFY
Approved By: ALK

CivilScience Engineers | Surveyors | Solutions

UTA

FENCING DETAILS

LEHI CITY
LEH_OP_1
PED OVERPASS STRUCTURE - UDOT STR NO. F-923
SR-92 & DIGITAL DRIVE

CADD Filename: LEH OP 1-BR-28.dgn
UTA Contract No.: 18-2399TP
Drawing: BR-28
Sheet No.: 28 OF 31

DGN Filer:P:\Proj\0344489\LEH_OP_1-BR-28.dgn
03-MAR-2020

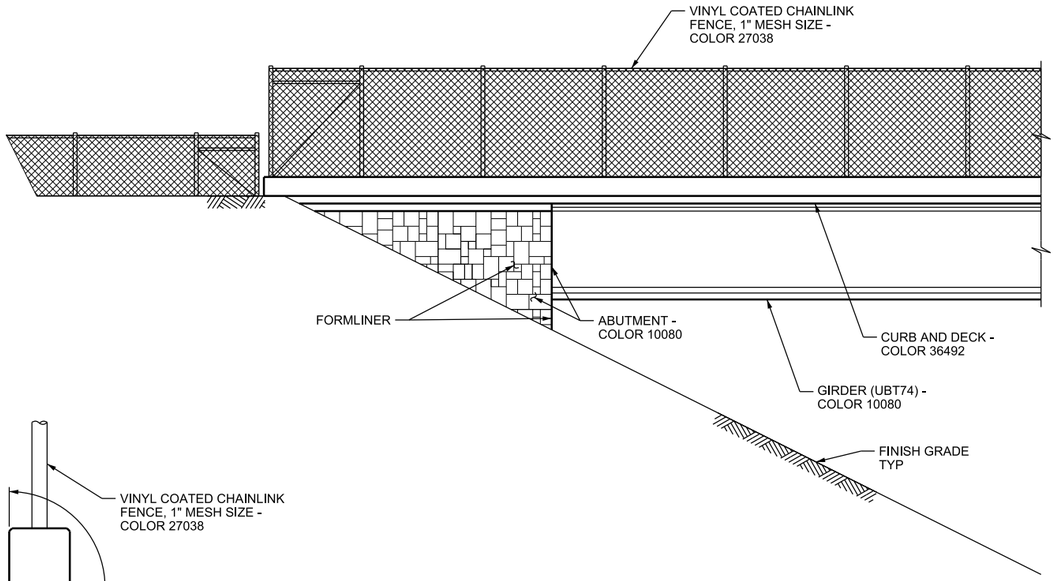

ABUTMENTS

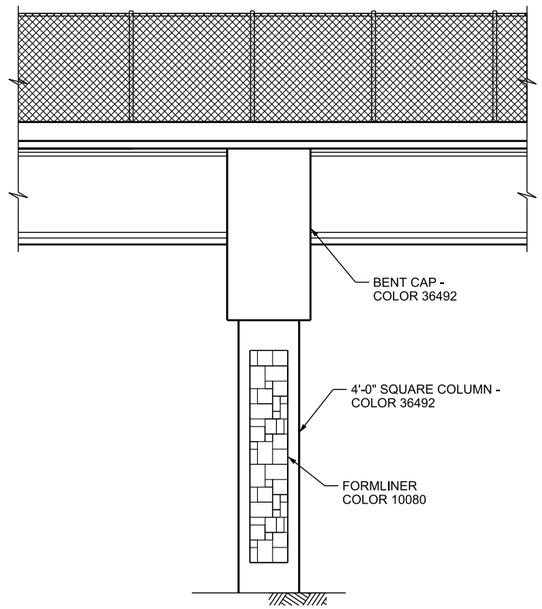

BENTS

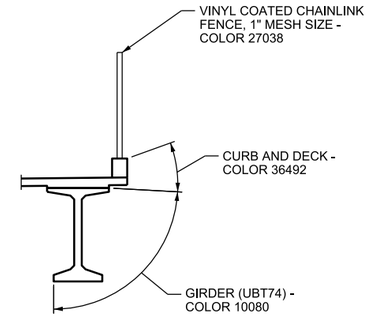

TYPICAL SUPERSTRUCTURE SECTION

QUANTITIES - TINTED CONCRETE SEALER			
COLOR	LOCATION	EST QTY	UNIT
10080	BRIDGE	11,990	SQ FT
	WALL-A	3,950	
	WALL-B	3,490	
	WALL-C	3,040	
36492	BRIDGE	5,420	
	WALL-A	1,380	
	WALL-B	940	
	WALL-C	1,470	

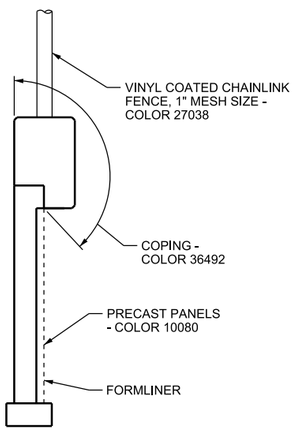

MSE WALLS

QUANTITIES - FORMLINER		
LOCATION	EST QTY	UNIT
BRIDGE	990	SQ FT
WALL-A	3,950	
WALL-B	3,490	
WALL-C	3,040	

COLORS

AMS-STD-595A
COLOR 10080

AMS-STD-595A
COLOR 27038

AMS-STD-595A
COLOR 36492

FORMLINER PATTERN

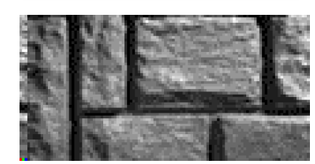

STONE 1203 - 1.5" RANDOM ASHLAR STONE BY AMERICAN FORMLINERS, OR APPROVED EQUAL

REV	DATE	DESCRIPTION

Designed By: AFY
Drawn By: TCV
Checked By: ALK
Approved By: ALK

CivilScience Engineers | Surveyors | Solutions

UTA

AESTHETIC DETAILS

LEHI CITY
LEH_OP_1
PED OVERPASS STRUCTURE - UDOT STR NO. F-923
SR-92 & DIGITAL DRIVE

CADD Filename: LEH OP 1-BR-29.dgn
UTA Contract No.: 18-2399TP
Drawing: BR-29
Sheet No.: 29 OF 31

DGN File: JP_PWPw8344489\LEH_OP_1-BR-29.dgn
03-MAR-2020

MARK	LOCATION	SIZE NO.	NO. BARS	TYPE	LENGTH	TOTAL LENGTH	DIMENSIONS				SERIES INC.	REMARKS
							A	B	C	D		
A1	ABUT - CAP	7	72	1	7'-0"	504'-0"	1'-2"	5'-10"				
A2	ABUT - CAP	5	24	3	13'-3"	318'-0"	3'-1"	3'-1"				
A3	ABUT - CAP	7	16	7	15'-3"	244'-0"	13'-4"	1'-2"				
A4	ABUT - CAP	7	16	16	19'-10"	317'-4"	2'-6"	13'-4"	2'-6"			
A5	ABUT - CAP	5	44	16	9'-8"	425'-4"	2'-7"	3'-6"	2'-7"			
A6	ABUT - CAP	5	12	STR	13'-4"	160'-0"	13'-4"					
A7	ABUT - DIA	5	26	2	11'-6"	299'-0"	1'-0"	5'-7"	4'-11"			
A8	ABUT - DIA	5	44	1	10'-4"	454'-8"	4'-0"	6'-4"				
A9	ABUT - DIA	5	48	2	8'-9"	420'-0"	4'-0"	0'-9"	4'-0"			
A10	ABUT - DIA	7	8	2	14'-4"	114'-8"	5'-0"	4'-4"	5'-0"			
A11	ABUT - DIA	5	12	STR	11'-1"	133'-0"	11'-1"					
A12	ABUT - DIA	5	14	STR	6'-4"	88'-8"	6'-4"					
A13	ABUT - DIA	5	28	STR	5'-8"	158'-8"	5'-8"					
A14	ABUT - DIA	5	6	STR	4'-3"	25'-6"	4'-3"					
A15	ABUT - DIA	5	4	STR	11'-1"	44'-4"	11'-1"					
A16	ABUT - DIA	5	16	3	19'-1"	305'-4"	4'-7"	4'-6"				
A17	ABUT - DIA	5	44	7	4'-10"	212'-8"	3'-6"	0'-10"				
C1	COLUMN	10	36	STR	35'-5"	1275'-0"	35'-5"					A706
C2	COLUMN	10	36	STR	30'-10"	1110'-0"	30'-10"					A706
C3	COLUMN	4	24	STR	17'-6"	420'-0"	17'-6"					
C4	COLUMN	6	3	11	999'-5"	2998'-3"	0'-4"	3'-4"	30'-9"			A706
C5												C5 MARK NOT USED
C6	COLUMN	4	216	2	2'-11"	630'-0"	1'-3"	0'-5"	1'-3"			
C7	COLUMN	6	3	11	166'-6"	499'-6"	0'-4"	3'-4"	4'-3"			A706
B1	BENT - CAP	10	48	2	21'-6"	1032'-0"	2'-0"	17'-6"	2'-0"			
B2	BENT - CAP	10	36	2	21'-6"	774'-0"	2'-0"	17'-6"	2'-0"			
B3	BENT - CAP	5	108	3	23'-6"	2538'-0"	6'-7"	4'-8"				
B4	BENT - CAP	5	36	2	8'-6"	306'-0"	2'-0"	4'-6"	2'-0"			
B5	BENT - CAP	5	36	20	10'-6"	378'-0"	6'-6"	2'-0"	1'-4"	1'-0"		
B6	BENT - CAP	5	36	STR	17'-6"	630'-0"	17'-6"					
B7	BENT - CAP	4	63	7	7'-9"	488'-3"	6'-8"	0'-8"				
B8	BENT - CAP	10	54	1	11'-6"	621'-0"	2'-0"	9'-6"				
W1	WINGWALL	5	24	STR	15'-6"	372'-0"	15'-6"					
W2	WINGWALL	5	8 SERIES OF 8	STR	3'-5" TO 14'-7"	576'-0"	3'-5" TO 14'-7"				1'-4 3/4"	
W3	WINGWALL	5	8 SERIES OF 12	STR	1'-7" TO 8'-10"	500'-0"	1'-7" TO 8'-10"				0'-7 1/4"	
W4	WINGWALL	5	40	STR	8'-10"	353'-4"	8'-10"					
W5	WINGWALL	5	8	STR	15'-0"	120'-0"	15'-0"					

BENDING DIAGRAMS

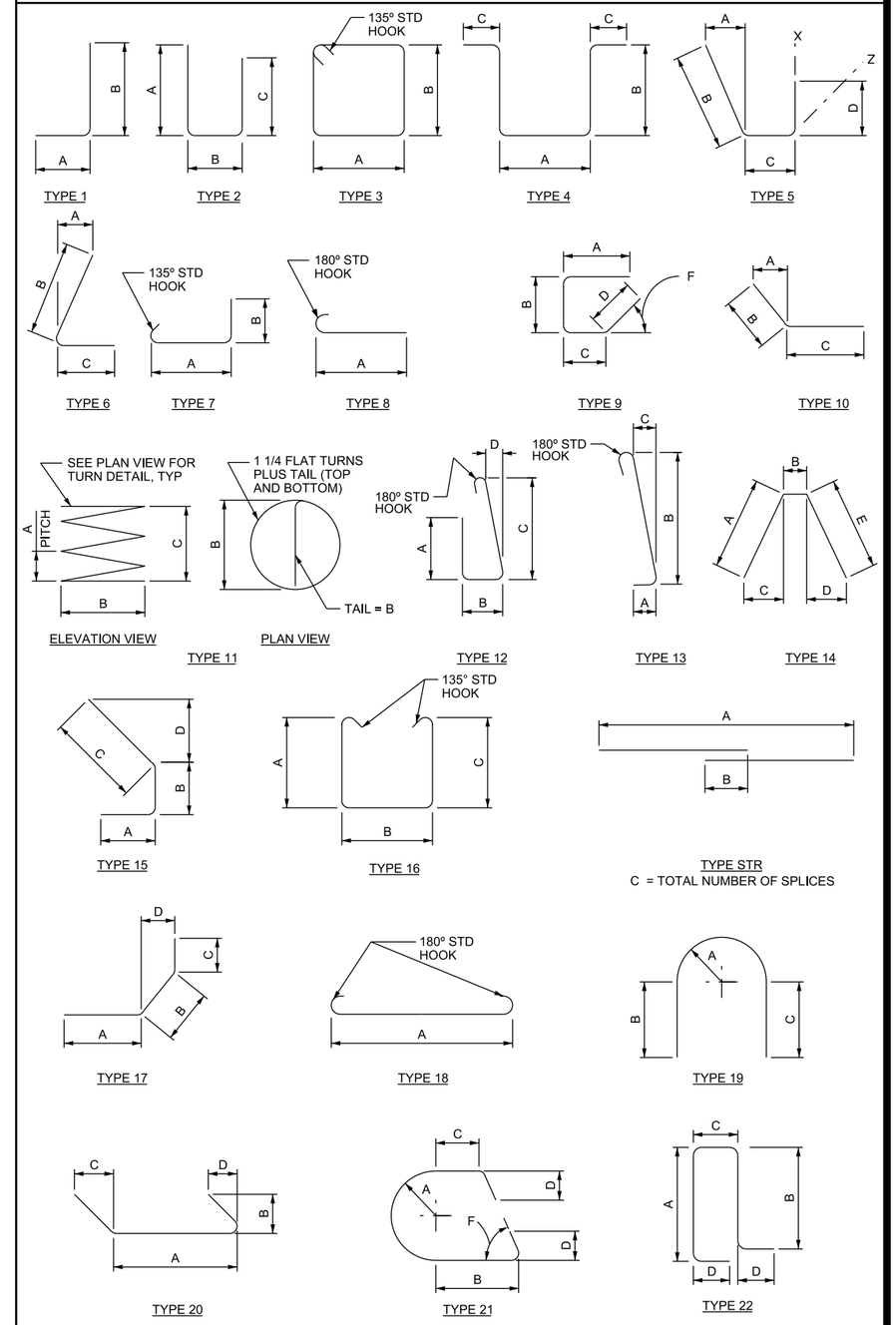

REMARK CODES

A - PROVIDE NUMBER OF BARS AT SPACING AS SHOWN ON THE PLANS.

B - PROVIDE AVERAGE SPACING OF BARS AS SHOWN ON THE PLANS. SPACE BARS WITHIN TOLERANCES PER "PLACING REINFORCING BARS, 8TH EDITION" BY CRSI.

C - PROVIDE NUMBER OF BARS AS SHOWN ON THE PLANS. ACTUAL SPACING OF BARS MAY VARY.

D - NUMBER OF SPLICES MAY BE INCREASED. LOCATE AND STAGGER SPLICES AS INDICATED ON THE PLANS OR PER REMARKS.

E - STAGGER SPLICES. NO MORE THAN 50% OF BARS MAY BE SPLICED AT THE SAME LOCATION.

NOTES

1. ALL BARS ARE COATED.
2. BAR SIZES ARE U.S. UNITS.
3. REINFORCING STEEL DIMENSIONS ARE OUT TO OUT OF BARS UNLESS OTHERWISE NOTED.
4. TYPE 'STR' INDICATES A STRAIGHT BAR. TYPE 'SER OF' INDICATES SERIES (CUT SET) BARS AND COLUMN TITLE 'SERIES INC' IS ABBREVIATED FOR 'SERIES INCREMENT'.
5. SERIES BARS - EACH BAR VARIES BY TABULATED AMOUNT.
6. SPLICES MAY BE OMITTED AT FABRICATOR'S OPTION, HOWEVER, IN SUCH CASE, FABRICATOR ASSUMES RESPONSIBILITY FOR FIT.
7. USE THE CRSI MANUAL OF PRACTICE, LATEST EDITION FOR HOOKS, BENDS, AND FABRICATION OF REINFORCING STEEL UNLESS NOTED OTHERWISE.

REV	DATE	DESCRIPTION

Designed By: KGJ
Drawn By: DCV
Checked By: AFY
Approved By: ALK

CivilScience Engineers | Surveyors | Solutions

UTA

REINFORCING SCHEDULE 1 OF 2

LEHI CITY
LEH_OP_1
PED OVERPASS STRUCTURE - UDOT STR NO. F-923
SR-92 & DIGITAL DRIVE

CADD Filename: LEH OP 1-BR-30.dgn
UTA Contract No.: 18-2399TP
Drawing: BR-30
Sheet No.: 30 OF 31

DGN File: IP_PWPub@344489\LEH_OP_1-BR-30.dgn
03-MAR-2020

MARK	LOCATION	SIZE	NO. BARS	TYPE	LENGTH (FT)	TOTAL LENGTH (FT)	DIMENSIONS (FT)						SERIES	REMARKS
							A	B	C	D	E	F (*)		
S1	DECK	5	38	STR	539'-0"	20482'-0"	500'-0'	3'-0"	13					E
S2	DECK	5	1000	STR	13'-8"	13666'-8"	13'-8"							
S3	DECK	5	1070	22	5'-3"	5617'-6"	1'-6"	1'-5"	0'-8"	0'-10"				
S4	DECK	5	8	STR	539'-0"	4312'-0"	500'-0'	3'-0"	13					E
S5	DECK	5	16	STR	17'-0"	272'-0"	17'-0"							APPROACH SLAB CURB
S6	DECK	5	42	STR	26'-0"	1092'-0"	26'-0"							
S7	DECK	5	231	4	7'-1"	1636'-3"	3'-9"	0'-8"	1'-0"					
S8	DECK	5	2	STR	62'-5"	124'-10"	60'-0"	2'-5"	1					SPAN #1, GIRDER #1
S9	DECK	5	2	STR	38'-0"	76'-0"	38'-0"							SPAN #1, GIRDER #2
S10	DECK	5	2	STR	55'-0"	110'-0"	55'-0"							SPAN #4, GIRDER #1
S11	DECK	5	2	STR	80'-5"	160'-10"	78'-0"	2'-5"	1					SPAN #4, GIRDER #2
S12	DECK	5	1002	18	14'-10"	14863'-0"	13'-8"							
BD1	BENT-DIAPH	5	42	6	8'-4"	350'-0"	3'-0"	4'-10"	3'-6"					
BD2	BENT-DIAPH	5	42	10	8'-4"	350'-0"	3'-0"	4'-10"	3'-6"					
BD3	BENT-DIAPH	5	42	STR	8'-10"	371'-0"	8'-10"							
BD4	BENT-DIAPH	5	84	STR	7'-4"	616'-0"	7'-4"							
BD5	BENT-DIAPH	5	39	16	20'-2"	786'-6"	6'-4"	6'-7"	6'-4"					
BD6	BENT-DIAPH	5	24	3	23'-1"	554'-0"	6'-7"	4'-6"						
BD7	BENT-DIAPH	5	39	7	8'-1"	315'-3"	6'-7"	1'-0"						
BD8	BENT-DIAPH	5	6	20	15'-11"	95'-6"	6'-6"	4'-0"	2'-6"	2'-6"				
BD9	BENT-DIAPH	5	36	2	9'-0"	324'-0"	2'-0"	5'-0"	2'-0"					
AS1	APPR-SLAB	5	30	STR	6'-0"	180'-0"	6'-0"							
AS2	APPR-SLAB	6	128	STR	16'-8"	2133'-4"	16'-8"							
AS3	APPR-SLAB	5	59	9	4'-10"	285'-2"	2'-9"	0'-7"	0'-8"	0'-10"		45.0		
AS4	APPR-SLAB	5	1 SERIES OF 18	18	15'-3" TO 16'-8"	290'-10"	15'-3" TO 16'-8"						0.083	
AS5	APPR-SLAB	5	1 SERIES OF 18	STR	12'-1" TO 13'-6"	230'-3"	12'-1" TO 13'-6"						0.083	
AS6	APPR-SLAB	5	1 SERIES OF 12	STR	15'-3" TO 16'-1"	188'-0"	15'-3" TO 16'-1"						0.076	
AS7	APPR-SLAB	5	1 SERIES OF 12	STR	12'-1" TO 12'-11"	150'-0"	12'-1" TO 12'-11"						0.076	
AS8	APPR-SLAB	5	6	STR	14'-11"	89'-6"	14'-11"							
AS9	APPR-SLAB	5	6	STR	12'-11"	77'-6"	12'-11"							
SS1	SLPR-SLAB	5	12	STR	15'-6"	186'-0"	15'-6"							
SS2	SLPR-SLAB	5	33	2	3'-2"	104'-6"	1'-3"	0'-8"	1'-3"					
SS3	SLPR-SLAB	5	33	STR	2'-6"	82'-6"	2'-6"							
SS4	SLPR-SLAB	5	12	STR	15'-3"	183'-0"	15'-3"							
CB1	DRAIN	5	4	STR	3'-0"	12'-0"	3'-0"							
CB2	DRAIN	5	6	4	11'-0"	66'-0"	3'-0"	3'-3"	0'-9"					
CB3	DRAIN	5	8	3	12'-11"	103'-4"	3'-0"	3'-0"						
CB4	DRAIN	5	4	2	6'-9"	27'-0"	2'-3"	2'-3"	2'-3"					
CB5	DRAIN	5	6	4	14'-6"	87'-0"	3'-0"	5'-0"	0'-9"					

SUMMARY OF COATED BARS - AASHTO M31 GRADE 60

1,538'-3"	OF NUMBER	4	BARS	AT	0.668	LB/FT=	1.028	LB
77,628'-1"	OF NUMBER	5	BARS	AT	1.043	LB/FT=	80.966	LB
2,133'-4"	OF NUMBER	6	BARS	AT	1.502	LB/FT=	3.204	LB
1,180'-0"	OF NUMBER	7	BARS	AT	2.044	LB/FT=	2.412	LB
2,427'-0"	OF NUMBER	10	BARS	AT	4.303	LB/FT=	10.443	LB
						TOTAL =	98.053	LB

SUMMARY OF COATED BARS - ASTM A706 GRADE 60

3,497'-9"	OF NUMBER	6	BARS	AT	1.502	LB/FT=	5.254	LB
2,385'-0"	OF NUMBER	10	BARS	AT	4.303	LB/FT=	10.263	LB
						TOTAL=	15.516	LB

NOTES

1. SEE "REINFORCING SCHEDULE 1 OF 2" FOR REMARK CODES, BENDING DIAGRAMS, AND NOTES.

REV	DATE	DESCRIPTION

Designed By: KGJ
Drawn By: DCV
Checked By: AFY
Approved By: ALK

CivilScience Engineers | Surveyors | Solutions

UTA

REINFORCING SCHEDULE 2 OF 2

LEHI CITY
LEH_OP_1
PED OVERPASS STRUCTURE - UDOT STR NO. F-923
SR-92 & DIGITAL DRIVE

CADD Filename: LEH OP 1-BR-31.dgn
UTA Contract No. 18-2399TP
Drawing: BR-31
Sheet No.: 31 OF 31

DGN File: P:\Proj\8344489\LEH_OP_1-BR-31.dgn
03-MAR-2020