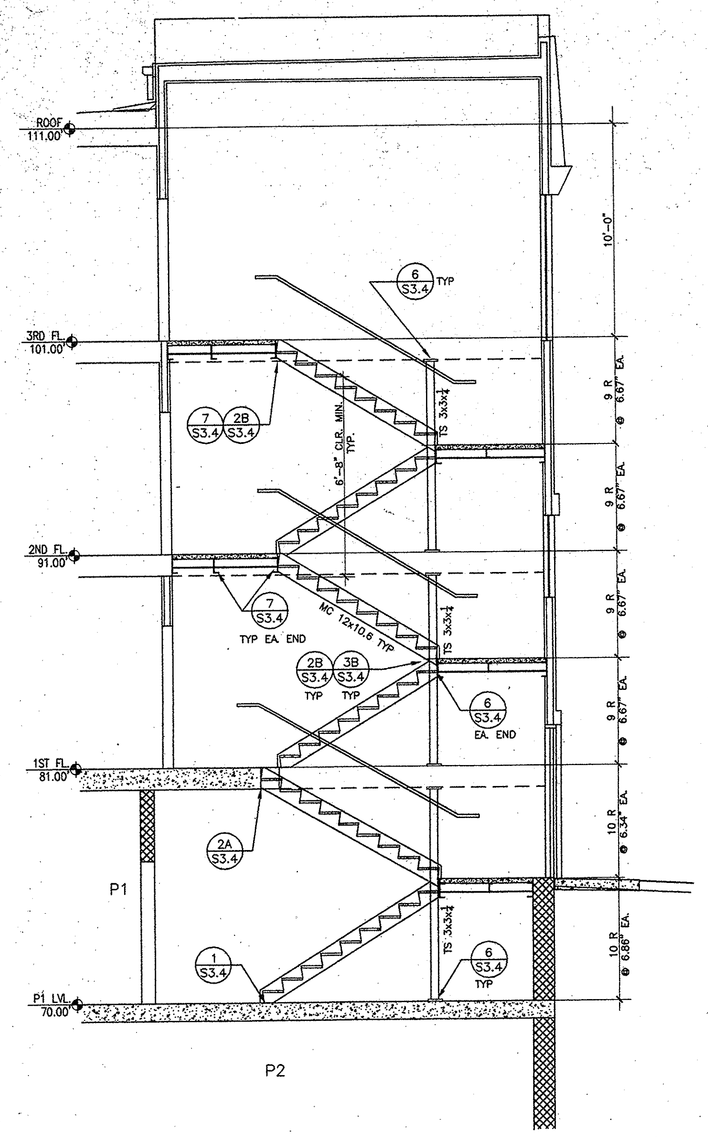

STAIR 2 – BUILDING 1

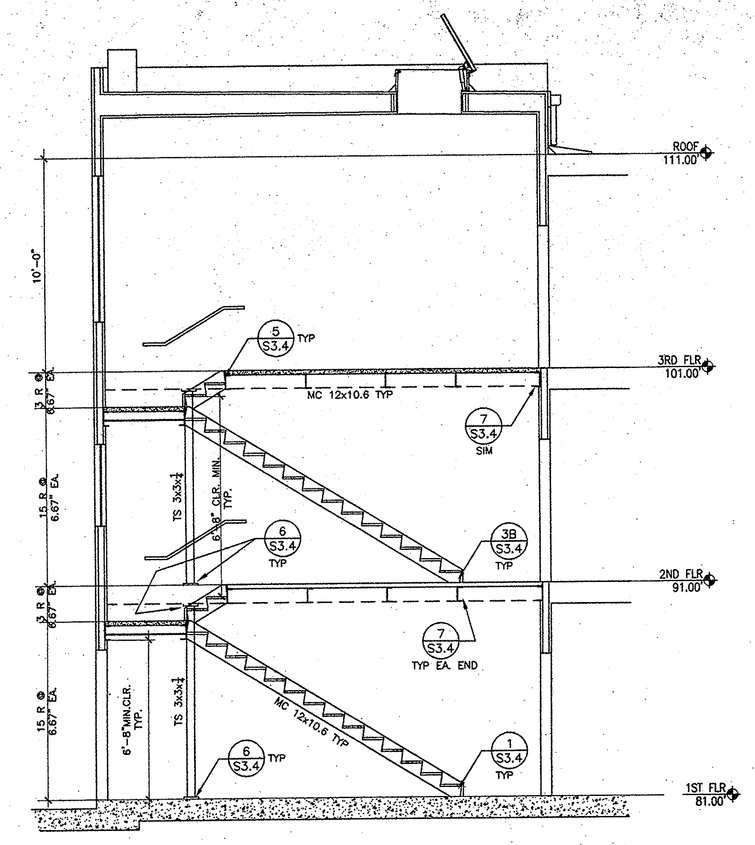

STAIR 1 – BUILDING 1

NOTE:

1. VERIFY ALL DIMENSIONS AND ELEVATIONS WITH ARCH'L. DWGS.
2. FOR DETAILS NOT SHOWN HERE SEE SHEET S-3.4 .
3. FOR ALL OTHER STAIRS NOT SHOWN HERE USE SIMILAR DETAILS.

CONCRETE BEAM SCHEDULE

BEAM MARK	BEAM SECTION	STIRRUP SPACING FROM FACE OF SUPPORT	SOUTH OR WEST SUPPORT	NORTH OR EAST SUPPORT	STIRRUP SPACING FROM FACE OF SUPPORT
CB–1	4'-6", 12", #4 AT 12 CL. FACE CONT.	1–#4 1 AT 2" REM. AT 12"	7'-0"; 2–#5; 2'-6" TYP.; 2–#6; 3–#8	7'-0"; 2–#5; 2–#6	1–#4 1 AT 2" REM. AT 12"
CB–2	30", 18"	1–#4 12 AT 6" REM. AT 12"	7'-0"; 2–#6; 2'-6" TYP.; 2–#9; 4–#9; 2'-0"	7'-0"; 2–#6; 1" CLR.; 4–#9; 2'-0"	1–#4 12 AT 6" REM. AT 12"
CB–3	36", 11⅛"	1–#4 1 AT 2" 6 AT 6" REM. AT 12"	7'-0"; 2–#6; 2'-6" TYP.; 3–#9	7'-0"; 6–#9; 7'-0"; 2–#6; SYMM. ABOUT THIS LINE	1–#4 1 AT 2" 6 AT 6" REM. AT 12"
CB–4	24", 18"	1–#4 1 AT 2" REM. AT 10"	6'-0"; 2–#9; 8'-0"; 2–#6; 2'-6" TYP.; 5–#9	8'-0"; 2–#9; 6'-0"; 2–#6	1–#4 1 AT 2" REM. AT 10"
CB–5	24", 14"	1–#4 1 AT 2" 6 AT 6" REM. AT 10"	6'-0"; 2–#6; 9'-0"; 2–#9; 3'-0" TYP.; 2–#9; 3–#9; 2'-0"	9'-0"; 2–#6; 6'-0"; 2–#6; 1" CLR.; 2'-0"	1–#4 1 AT 2" 6 AT 6" REM. AT 10"
CB–6	24", 16"	1–#4 1 AT 2" 10 AT 6" REM. AT 10"	3'-0"; 2–#6; 9'-0"; 2–#9; 3'-0" TYP.; 2–#9; 4–#9; 2'-0"	9'-0"; 2–#6; 3'-0"; 2–#6; 1" CLR.; 2'-0"	1–#4 1 AT 2" 10 AT 6" REM. AT 10"
CB–7	24", 14"	1–#4 1 AT 2" REM. AT 10"	6'-0"; 2–#9; 10'-0"; 2–#9; 3'-0" TYP.; 3–#9; 3–#9; 2'-0"	10'-0"; 2–#9; 6'-0"; 2–#9; 1" CLR.; 2'-0"	1–#4 1 AT 2" REM. AT 12"
CB–8	18", 24"	1–#4 1 AT 2" REM. AT 8"	3'-0"; 2–#6; 6'-0"; 4–#9; 3'-0" TYP.; 3–#9; 3–#9; 2'-0"	9'-0"; 2–#6; 3'-0"; 0"; 2'-0"	1–#4 1 AT 2" REM. AT 8"
CB–9	24", 14"	1–#4 1 AT 2" 8 AT 6" REM. AT 10"	6'-0"; 2–#9; 8'-0"; 2–#6; 3'-0" TYP.; 3–#9; 3–#9; 2'-0"	8'-0"; 2–#9; 6'-0"; 2–#6; 1" CLR.; 2'-0"	1–#4 1 AT 2" 8 AT 6" REM. AT 10"
A CB–10	20", 14"	1–#4 1 AT 2" 10 AT 6" REM. AT 10"	6'-6"; 2–#6; 2–#6; 3'-0" TYP.; 4–#8	6'-6"; 2–#6; 4'-0"; 2–#6	1–#4 1 AT 2" 10 AT 6" REM. AT 10"
CB–11	24", 16"	1–#4 1 AT 2" 10 AT 6" REM. AT 10"	4'-0"; 2–#6; 9'-6"; 2–#6; 3'-0" TYP.; 4–#9	9'-6"; 2–#6; 4'-0"; 2–#6	1–#4 1 AT 2" 10 AT 6" REM. AT 10"

VAN TILBURG, BANVARD & SODERBERGH, AIA
ARCHITECTURE · PLANNING · INTERIORS

PENTHOUSE, 225 ARIZONA AVENUE
SANTA MONICA, CA 90401
TEL 310.394.0273 FAX 310.394.2424

SUITE 170, 1600 BLAKE STREET
DENVER, CO 80202
TEL 303.675.0941 FAX 303.675.0952

PLAYA DEL REY

8700 PERSHING DRIVE
PLAYA VISTA, CALIFORNIA 90293

ARCHSTONE COMMUNITIES TRUST
8801 Wall Street, Suite 800
Austin, Texas 78754

BRIAN L. COCHRAN ASSOCIATES, INC.
CONSULTING STRUCTURAL ENGINEERS
2040 ARMACOST AVE. LOS ANGELES CA. 90025
(310) 207–6638 FAX (310) 207–6188

ISSUE	DATE	DESCRIPTION
	08.18.00	PROGRESS & REVIEW SET
	09.06.00	DESIGN DEVELOPOMENT SET
	10.17.00	50% C.D.
	11.10.00	BLDG. DERARTMENT SUBMITTAL
	05.08.01	PLAN CHECK RESUBMITTAL
	06.28.01	BID SET
A	10.05.01	BID SET

PROJECT: 9985
DRAWN: A.V. CHECKED: B.B.

CONCRETE BEAM SCHEDULE AND SECTIONS & DETAILS

S-3.3

30x42 3/4"=1'-0" 00154S33 10-02-01