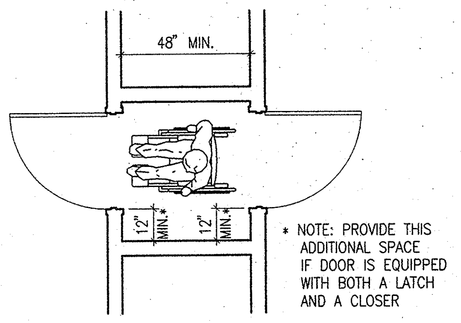

* NOTE: PROVIDE THIS ADDITIONAL SPACE IF DOOR IS EQUIPPED WITH BOTH A LATCH AND A CLOSER

ACCESSIBLE VESTIBULES TWO DOORS IN SERIES BOTH DOORS OPEN OUT — SCALE NONE — 18

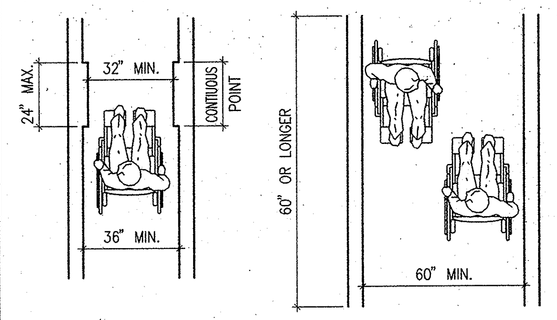

MINIMUM CLEAR WIDTH FOR A SINGLE WHEELCHAIR

MINIMUM CLEAR WIDTH FOR TWO WHEELCHAIRS

WHEELCHAIR SPACE ALLOWANCE — SCALE NONE — 14

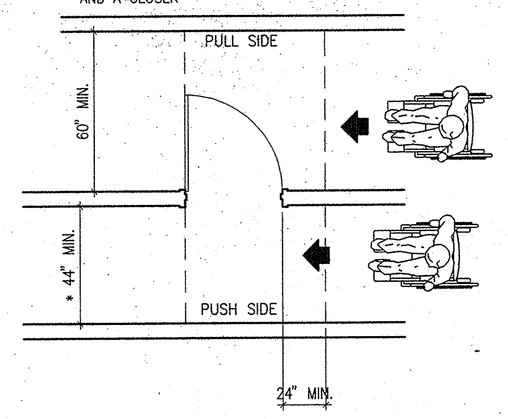

* NOTE: 48" MINIMUM IF DOOR HAS BOTH A LATCH AND A CLOSER

WHEELCHAIR MANEUVER'G CLEARANCE AT DOORS LATCH APPROCH — SCALE NONE — 12

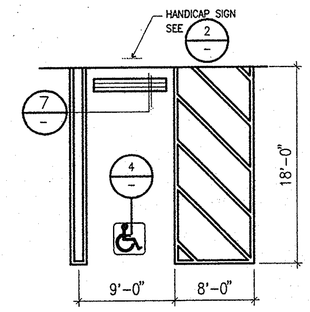

NOTE:
SURFACE OF PARKING SPACE(S) AND ACCESS AISLE(S) NOT TO EXCEED 1:50 GRADIENT (2.0%) IN ANY DIRECTION.

ACCESSIBLE VAN PARKING STALL — SCALE 1/8"=1'-0" — 8

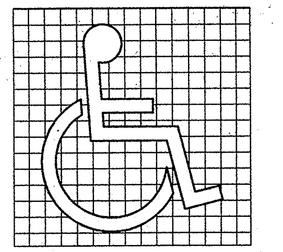

SYMBOL PROPORTIONS

DISPLAY CONDITIONS

ACCESSIBLE SYMBOLS — SCALE NONE — 4

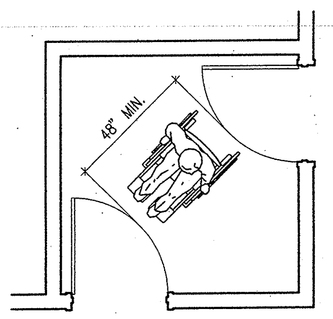

ACCESSIBLE VESTIBULES TWO DOORS IN SERIES AT ADJACENT WALLS — SCALE NONE — 17

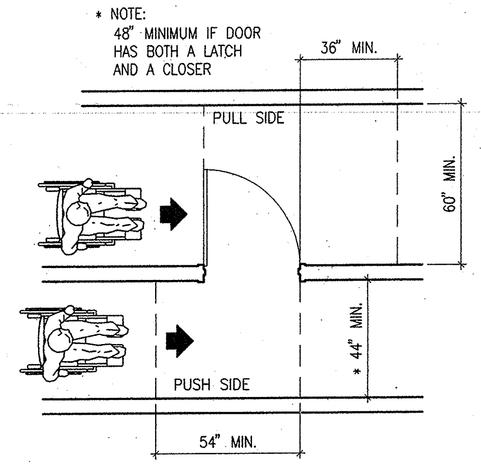

WHEELCHAIR MANEUVER'G CLEARANCE AT DOORS HINGE APPROCH — SCALE NONE — 13

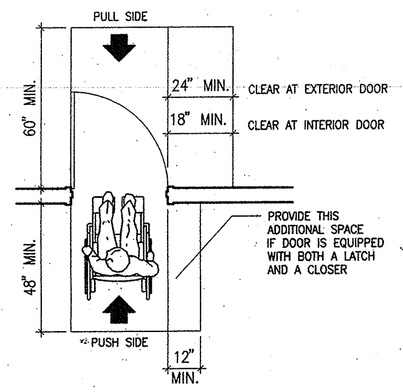

WHEELCHAIR MANEUVERING CLEARANCE AT DOORS — SCALE NONE — 11

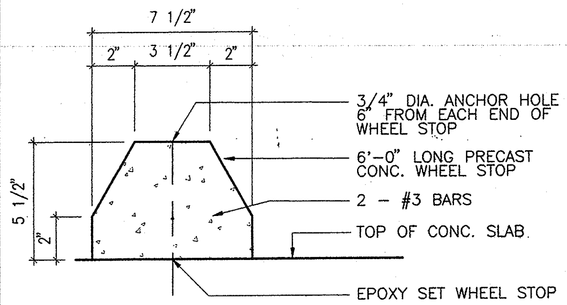

WHEELSTOP DETAIL — SCALE 3"=1'-0" — 7

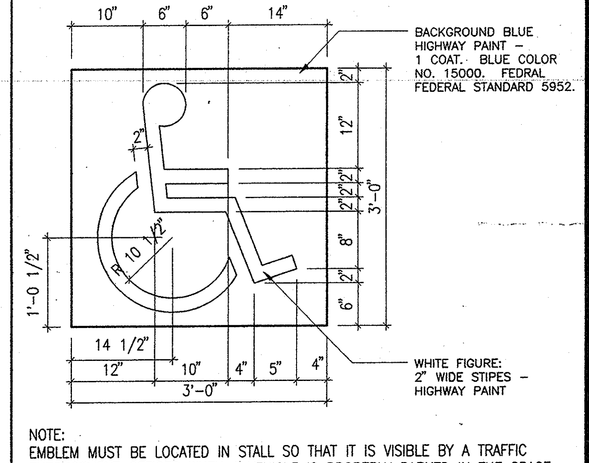

NOTE:
EMBLEM MUST BE LOCATED IN STALL SO THAT IT IS VISIBLE BY A TRAFFIC ENFORCEMENT OFFICER WHEN A VEHICLE IS PROPERLY PARKED IN THE SPACE (CENTERED AT ENTRANCE OF STALL IS RECOMMENDED)

HANDICAP SIGN — SCALE NONE — 3

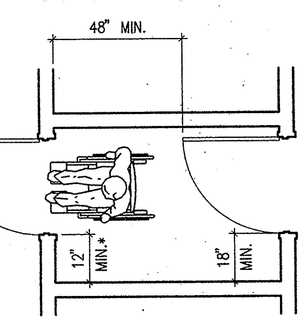

* NOTE: PROVIDE THIS ADDITIONAL SPACE IF DOOR IS EQUIPPED WITH BOTH A LATCH AND A CLOSER

ACCESSIBLE VESTIBULES TWO DOORS IN SERIES/DOORS IN SERIES — SCALE NONE — 16

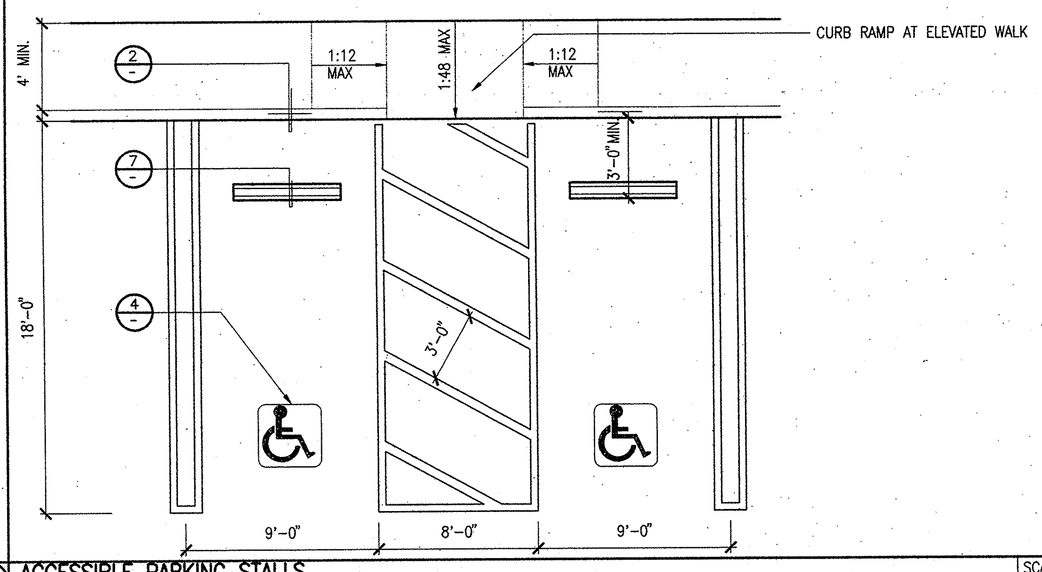

ACCESSIBLE PARKING STALLS (ONE VAN STALL) — SCALE 1/4"=1'-0" — 10

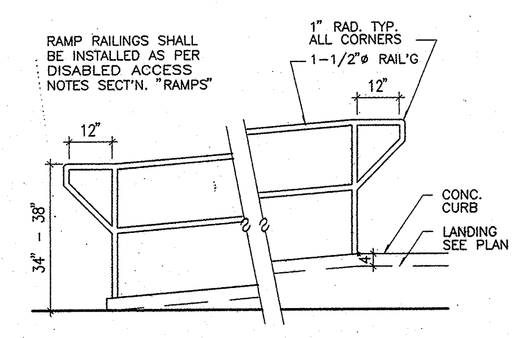

GROOVED BORDER DETAIL — SCALE NONE — 6

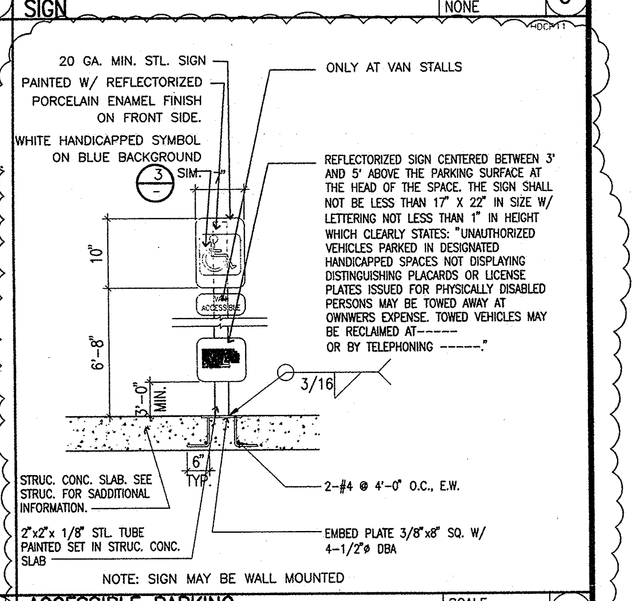

NOTE: SIGN MAY BE WALL MOUNTED

ACCESSIBLE PARKING STALL SIGN — SCALE 1"=1'-0" — 2

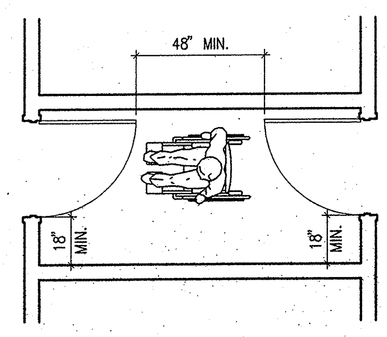

ACCESSIBLE VESTIBULE TWO DOORS IN SERIES AT OPPISITE WALLS — SCALE NONE — 15

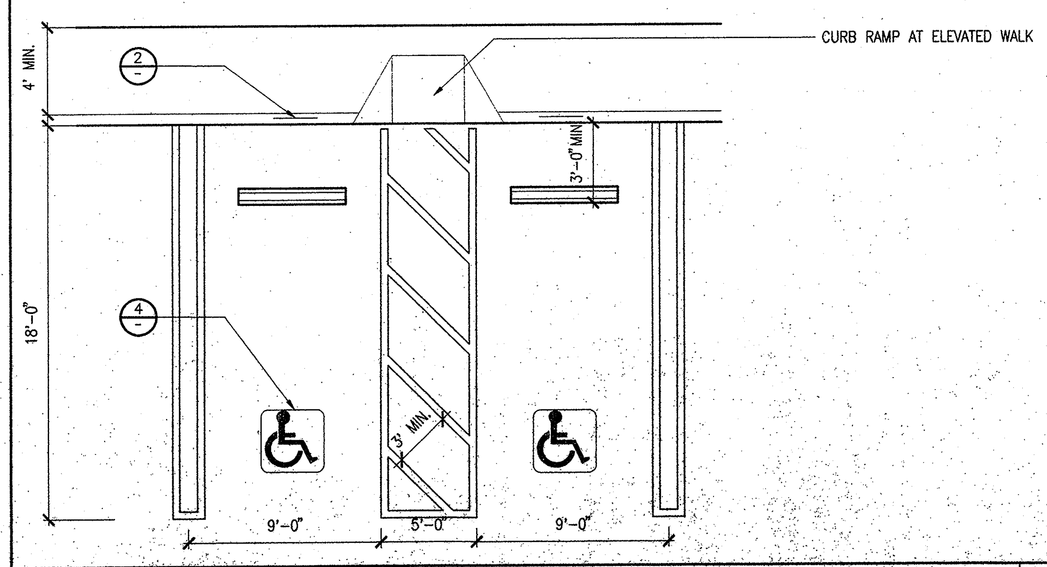

ACCESSIBLE PARKING STALLS — SCALE 1/4"=1'-0" — 9

ACCESSIBLE RAMP RAILING — SCALE NONE — 5

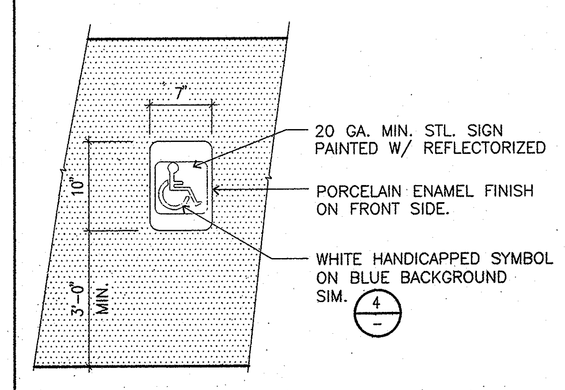

ACCESSIBLE PARKING STALL SIGN ATTACHED TO WALL — SCALE NONE — 1

PENTHOUSE, 225 ARIZONA AVENUE
SANTA MONICA, CA 90401
TEL 310.394.0273 FAX 310.394.2424

SUITE 170, 1860 "L" BLAKE STREET
DENVER, CO 80202
TEL 303.675.0941 FAX 303.675.0952

VAN TILBURG, BANVARD & SODERBERGH, AIA
ARCHITECTURE · PLANNING · INTERIORS

PLAYA DEL REY
8700 PERSHING DRIVE
PLAYA DEL REY, CALIFORNIA 90293

ARCHSTONE COMMUNITIES
217 Technology Drive, Second Floor
Irvine, California 92618

ISSUE	DATE	DESCRIPTION
	09.06.00	DESIGN DEVELOPMENT
	10.17.00	PROGRESS SET
	11.10.00	BUILDING DEPT. SUBMITTAL
	03.02.01	PROGRESS SET
	04.18.01	REVIEW SET
	06.28.01	REVIEW SET
	07.20.01	BID SET
1	10.05.01	GMAX SET

PROJECT: 9985
DRAWN: CHECKED:

ACCESSIBILITY DETAILS

A0.06b