CDET-510

LEGEND

1. EXPANSION JOINT. SEE CONSTRUCTION PLAN.
2. #4 REINFORCING BAR 18" O.C. MAX. 6" FROM EACH SIDE OF STEP
3. #4 REINFORCING BAR, CONTINUOUS
4. #4 REINFORCING BAR, CONTINUOUS. LOCATE AT THICKEST PART OF STEP
5. COMPACTED SUBGRADE PER SOILS ENG.'S SPECIFICATIONS
6. SLOPE STAIR TREAD 1%
7. 1-1/4" RADIUS BULLNOSE
8. FINISH SURFACE

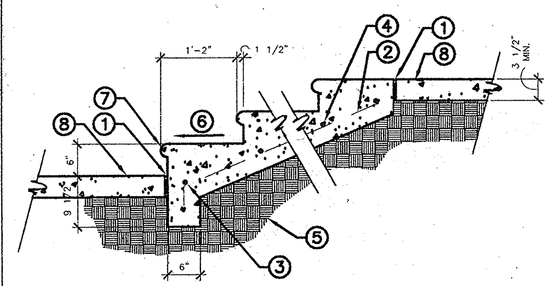

CONCRETE STEPS-TYPICAL — SCALE: 3/4"=1'-0" — 10

CDET-505

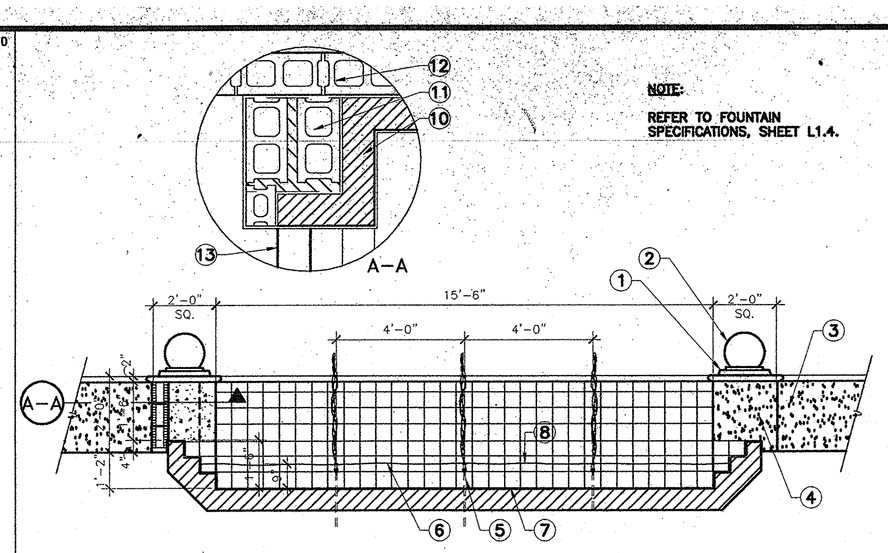

NOTE:

REFER TO FOUNTAIN SPECIFICATIONS, SHEET L1.4.

LEGEND

1. PRECAST CAP.
2. 15" DIA. CAST CONCRETE BALL FINIAL.
3. STUCCO WALL W/PRECAST CAP, RE: DETAIL 2, SHEET L1.3.
4. STUCCO FINISH COLOR AND FINISH TO MATCH ARCHITECTURE.
5. ROMAN FOUNTAIN CASCADE NOZZLES #RCN-050.
6. TILE; REFER TO CONSTRUCTION CALLOUT #21.
7. FOUNTAIN SHELF; REFER TO DETAIL 4, SHEET L1.3.
8. WATER LEVEL.
9. TILE WRAPS AROUND CORNER (TYP.)
10. CONCRETE FOUNTAIN SHELL W/ REINFORCING PER FOUNTAIN CONTRACTOR
11. MASONRY PILASTER
12. MASONRY WALL
13. EDGE OF FOUNTAIN

RECESSED FOUNTAIN ELEVATION — SCALE: 3/8"=1'-0" — 5

CDET-501

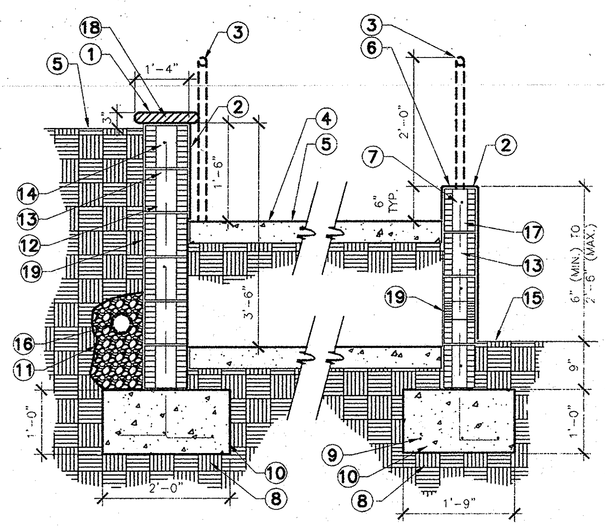

LEGEND

1. TOP OF WALL TO HOLD LEVEL @ 85.5±
2. STUCCO; COLOR TO MATCH BUILDING
3. H.C. RAIL/ATTACH TO WALL WHEN FEASIBLE
4. TOP OF RAMP/POOL DECK
5. FINISHED SURFACE
6. TOP OF CURB TO FOLLOW RAMP
7. #4 REBAR (TOP, MID & BOT.)
8. COMPACTED SUBGRADE
9. #4 REBAR AS SHOWN
10. CONCRETE FOOTING
11. 1 CU. FT. OF 3/4" GRAVEL CONT., WRAPPED IN MIRAFI.
12. 8 X 8 X 16 CMU GROUT CELLS W/REBAR
13. #4 REBAR VERT. @ 24" SOLID GROUTED
14. #4 HORIZ., @ 24" O.C. (MAX.)
15. FINISH GRADE
16. 4" PERFORATED PVC PIPE
17. 6X8X16 CMU
18. PRECAST CAP, NATURAL GREY COLOR TO MATCH POOL COPING
19. WATERPROOFING

RAMP WALL AND CURB — SCALE: 3/4"=1'-0" — 1

CDET-509

LEGEND

1. FIRE LANE
2. STUCCO FINISH TO MATCH ARCHITECTURE
3. CAP STONE
4. BATTERED FOUNTAIN WALL W/ ROUGH PEBBLE SURFACE
5. WATER LEVEL
6. POOL TILE
7. PRECAST COPING
8. FINISH SURFACE
9. FOUNTAIN SHELL
10. 1" REGLET IN STUCCO ON END WALL (TYP.)
11. WALL AND FOOTING; REFER TO DETAIL 6, SHEET L1.3.
12. COMPACTED SUBGRADE PER STRUCTURAL SOILS REPORT

NOTE:

REFER TO SHT. L1.4 FOR FOUNTAIN SPECIFICATIONS.

CDET-508

LEGEND

1. CMU WALL STUCCO FINISH TO MATCH ARCHITECTURE
2. CAPSTONE, EXTEND ENTIRE LENGTH OF FOUNTAIN
3. 'STONE' TILE
4. NOT USED
5. BATTERED FOUNTAIN WALL W/ROUGH PEBBLE SURFACE
6. BLOCK SUPPORT OR GUNITE BASE FOR PEBBLE WALL
7. PRECAST COPING
8. FINISH SURFACE @ 85.5 TO MATCH POOL/SPA
9. FOUNTAIN SHELL
10. SCOFIELD FRENCH GRAY POOL PLASTER
11. WALL/FOUNTAIN FOOTING PER STRUCTURAL ENGINEER
12. FIRE LANE
13. FACE OF SIDE FRAME
14. WATER LEVEL
15. 8" CMU SOLID GROUTED W/ #5@16" O.C. (VERT.) #4@24" O.C. (HORIZ.)
16. 12" CMU SOLID GROUTED W/ #6@16" O.C. (VERT.) #4@16" O.C. (HORIZ.)
17. #2@32" O.C. TIES
18. (2) 9' STAINLESS STEEL WATERFALL SPILLWAYS W/ BOTTOM FEED
19. MONOLITHIC BASIN
20. WATERPROOF MEMBRANE
21. 6-#4 CONT.
22. #4@24" O.C.
22. #4 CONT.

NOTE:
REFER TO SHT. L1.4 FOR FOUNTAIN SPECIFICATIONS.

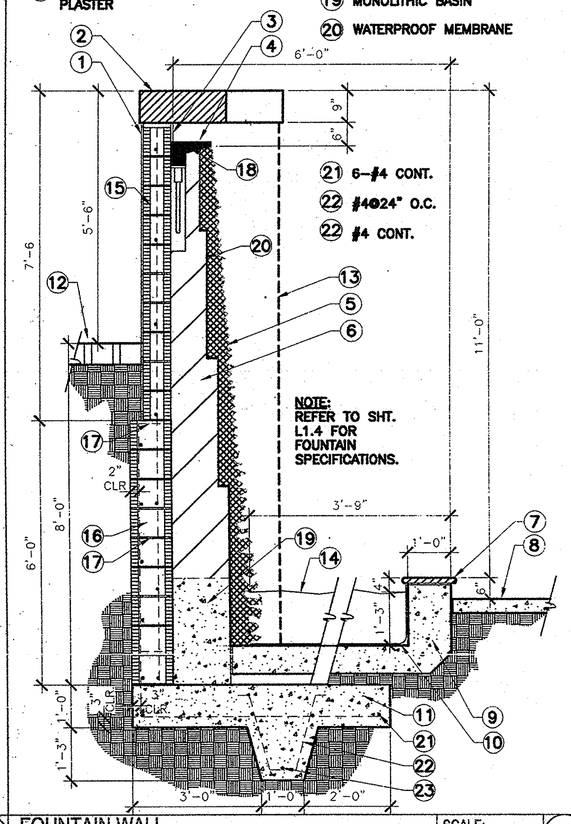

FOUNTAIN WALL -SECTION — SCALE: 1/2"=1'-0" — 6

CDET-504

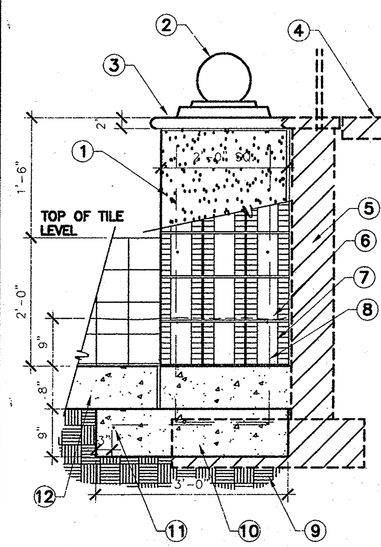

LEGEND

1. STUCCO TO MATCH ARCH.
2. 15" DIA CAST CONC. BALL FINIAL W/ BASE
3. PRECAST CAP TO MATCH POOL COPING
4. F.S./POOL DECK
5. POOL DECK RETAINING WALL BEHIND PIER
6. #4 TIES @ 32" O.C.
7. 8X8X16 CMU GROUT SOLID
8. #4 REINFORCING BAR EACH CORNER ALTERNATE BENDS IN FOOTING
9. COMPACTED SUBGRADE
10. CONCRETE FOOTING
11. #4 REBAR HORIZ. BOTH WAYS
12. FOUNTAIN SHELL

RECESSED FOUNTAIN PIER — SCALE: 3/4"=1'-0" — 3

CDET-502

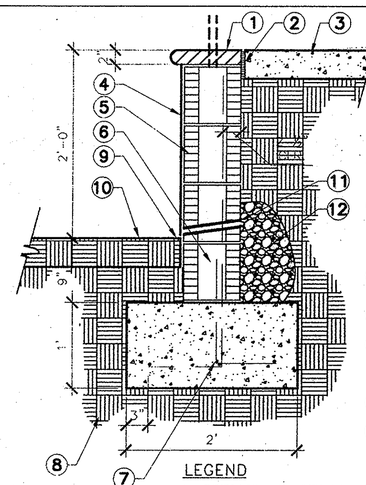

LEGEND

1. PRECAST CAP SET IN 3/8" MORTAR BED TO MATCH POOL COPING
2. EXPANSION JOINT
3. POOL DECK
4. STUCCO FINISH TO MATCH ARCH.
5. 8X8X16 CMU, GROUT SOLID
6. #4 REBAR VERT. @ 24" ON CENTER ALTERNATE BEND IN FOOTING
7. #4 REBAR, CONT. TOP & BOTTOM
8. EXPANSION JOINT
9. COMPACTED SUBGRADE PER STRUCTURAL ENGINEER
10. FINISH GRADE
11. 1" ø WEEP HOLE @32" O.C. AT PLANTING AREA
12. 1 CU. FT. 3/4" CRUSHED ROCK WRAPPED IN MIRAFI-TIE TO DRAIN SYSTEM BY ENGG.

RETAINING WALL AT PLAZA — SCALE: 1"=1'-0" — 2

CDET-503

LEGEND

1. STUCCO (FLUSH W/ TILE) TO MATCH ARCHITECTURE
2. 15"ø CAST CONCRETE BALL FINIAL W/ BASE
3. POOL FENCE; REFER TO DETAIL 6 & 8, SHEET L1.4
4. PRECAST CAP TO MATCH POOL COPING
5. POOL DECK
6. 2" X 2" FOUNTAIN TILE; REFER TO CONST. PLAN CALLOUT #21.
7. #4 VERT. @ 24" O.C. ALTERNATE BENDS IN FOOTING
8. #4 REBAR HORIZ., AS SHOWN
9. 8X8X16 CMU; GROUT CELLS W/REBAR
10. 4" PERF. DRAINLINE W/1 CU. FT. 3/4 CRUSHED ROCK WRAPPED IN MIRAFI – SLOPE TO WEEPHOLES IN ADJACENT WALLS.
11. CONCRETE FOOTING
12. COMPACTED SUBGRADE
13. ROMAN FOUNTAINS RCN-050 CASCADE NOZZLE (3 TOTAL) INSTALL PER MFG'S SPECS W/AUTO FILL 505-828-1801
14. WATER LINE
15. CONCRETE FOUNTAIN SHELL W/REINFORCING PER FOUNTAIN CONTRACTOR
16. FINISH SURFACE

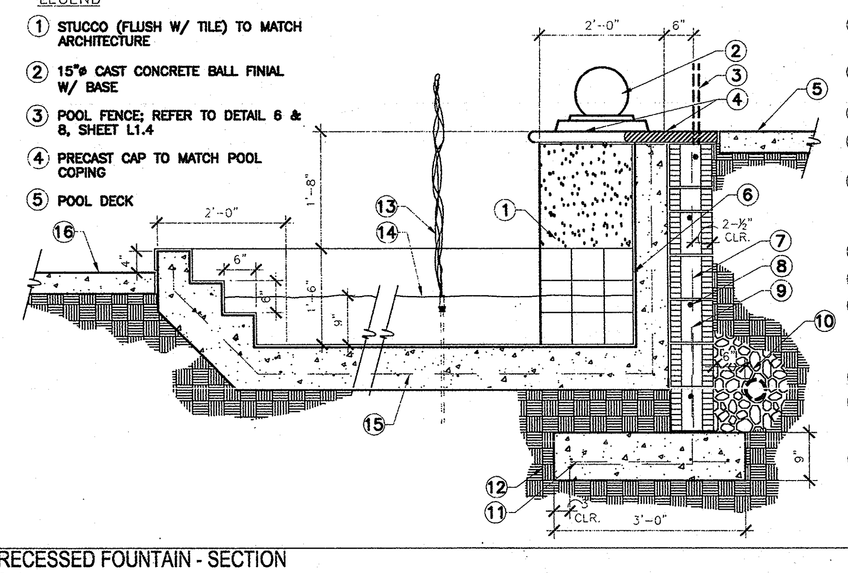

RECESSED FOUNTAIN - SECTION — SCALE: 3/4"=1'-0" — 4

CDET-523

LEGEND

1. #8 CMU SOLID GROUTED W/ #5 @ 16" O.C. (VERT.) #4 @ 24" O.C. (HORIZ.)
2. FIRE LANE
3. #2 @ 32" O.C. TIES
4. 12" CMU SOLID GROUTED W/ #6 @ 16" (VERT.) #4 @ 16" (HORIZ.)
5. #5 @ 12" O.C.
6. 6- #4 CONT. TOP & BOTT.
7. COMPACTED SUBGRADE PER STRUCT. SOILS REPORT

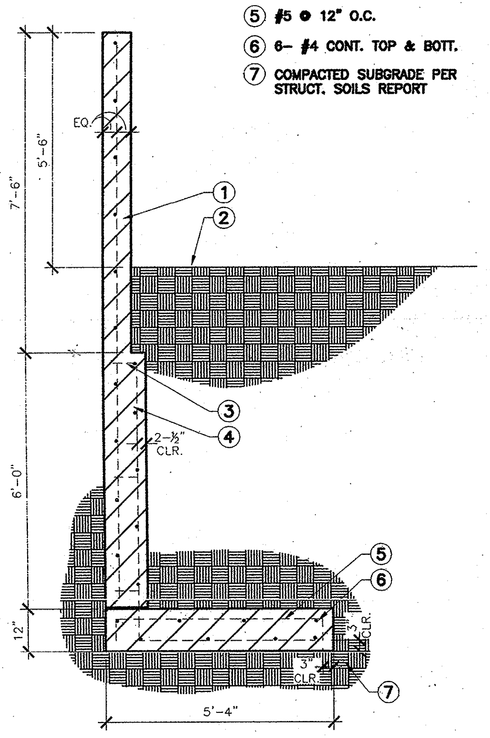

FIRELANE PERIEMETER WALL AT PLANTERS — SCALE: 1/2"=1'-0" — 11

CDET-521

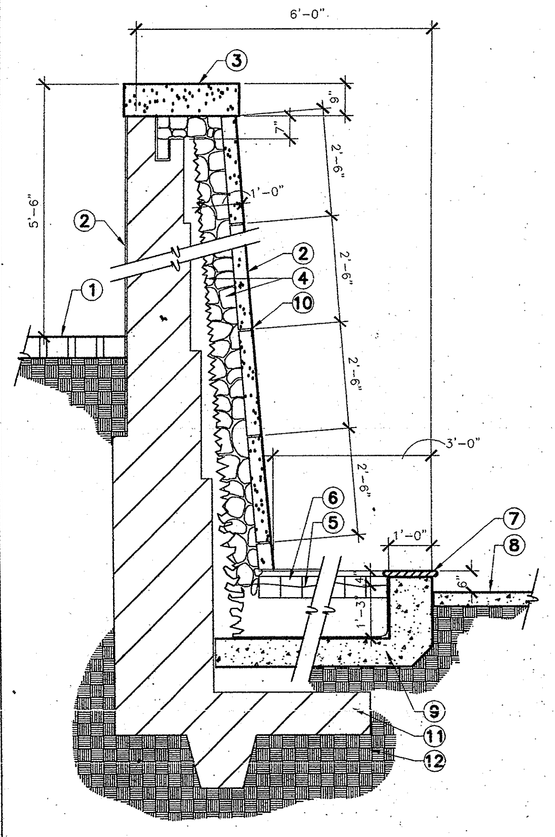

POOL AREA FOUNTAIN WALL @ ENDS OF FOUNTAIN - SECTION/ELEVATION — SCALE: 1/2"=1'-0" — 8

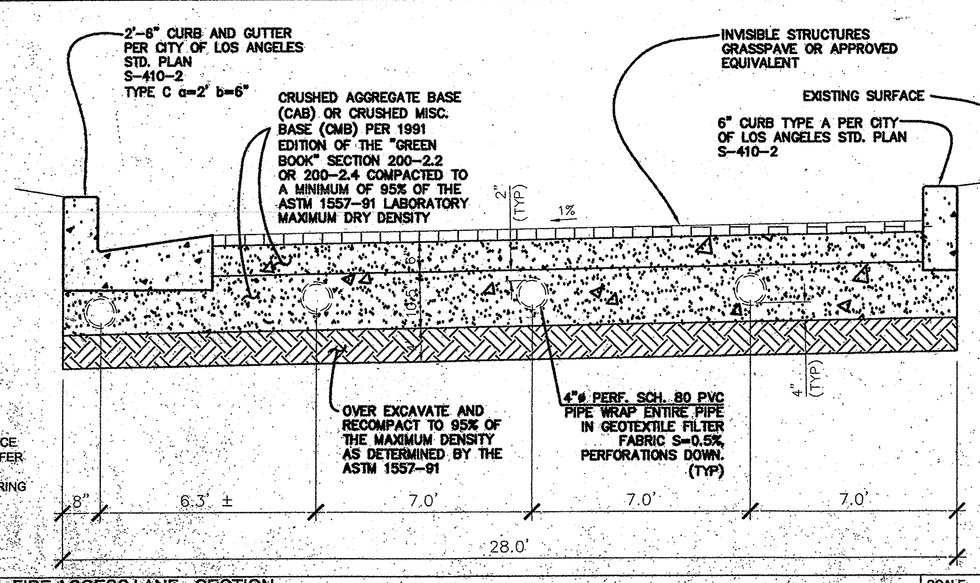

NOTE:

FOR REFERENCE ONLY, REFER TO CIVIL ENGINEERING PLANS.

TYPICAL FIRE ACCESS LANE - SECTION FOR REFERENCE ONLY — SCALE: N.T.S. — 9

CDET-507 A

LEGEND

1. STUCCO FINISH-COLOR TO MATCH ARCH
2. 8X2X16 CMU CAP
3. AMENDED BACKFILL, SUBMIT SAMPLE AND SOIL REPORT BY FRUIT GROWERS LAB, SANTA PAULA FOR LANDSCAPE ARCHITECT APPROVAL. SOIL SHALL BE MOUNDED OVER ALL TREE ROOT BALLS AS DIRECTED BY LANDSCAPE ARCHITECT.
4. FINISH GRADE
5. 2"X6"X16" CMU CAP
6. 1"X1-1/2" FOAM PLANT-ON
7. 12" AIR GAP ADJ. TO BUILDING WALLS (TYP.)
8. FACE OF BUILDING
9. #4 BAR CONT. HORIZ. AS SHOWN
10. #4 BAR VERT. @ 24" O.C.
11. PROTECTIVE BOARD AND WATERPROOFING PER BLDG. ARCHITECT'S SPECIFICATIONS
12. CAST IN SLAB DOWEL
13. STRUCTURAL SLAB
14. LIGHTWEIGHT CONCRETE TOPPING SLAB, SLOPE @ 1 % TO SLAB PENETRATION.
15. TOPPING SLAB, SLOPE TO DRAINS BY ENGINEER.
16. NOT USED
17. PAINT BLACK OR TAR AS REQ'D PER ENG/LAND. ARCH.
18. STUCCO REVEAL
19. 6X8X16 CMU, GROUT CELLS SOLID
20. ENKADRAIN MAT #920; INSTALL PER MANUFACTURER'S SPECIFICATIONS.

NOTE:
BID ALTERNATE:
REPLACE ENKADRAIN MAT WITH 3/4" CRUSHED GRAVEL BED TO COVER THE PIPE.

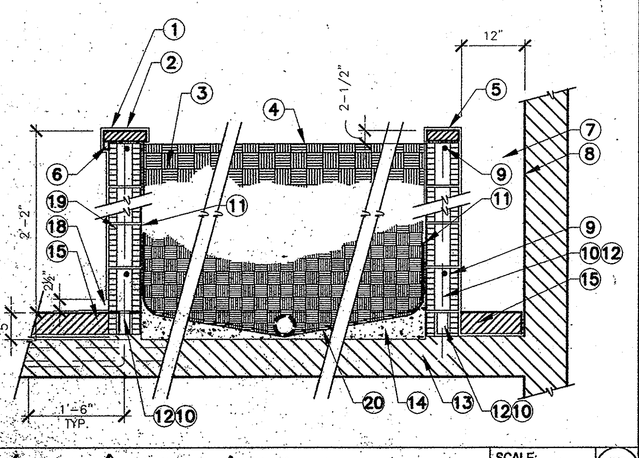

ON STRUCTURE PLANTER - TYPICAL — SCALE: 3/4"=1'-0" — 7

PLAYA DEL REY

8700 PERSHING DRIVE
PLAYA VISTA, CALIFORNIA 90293

ARCHSTONE COMMUNITIES TRUST
8801 Wall Street, Suite 800
Austin, Texas 78754

ISSUE	DATE	DESCRIPTION
	08.19.00	PROGRESS & REVIEW SET
	10.16.00	401K SUBMISSION SET
	11.10.00	CITY SUBMISSION
	12.12.00	PLANNING DEPT. SUBMITTAL
	02.05.01	BID SET
	04.18.01	REVIEW SET
	07.20.01	BID SET
A	10.05.01	GMAX SET

TGP
LANDSCAPE ARCHITECTURE SITE PLANNING URBAN DESIGN
17000 VENTURA BLVD. SUITE 205 ENCINO, CALIFORNIA 91316 FAX 818-907-8461 TEL: 818-907-8460

SUITE 170, 1860 BLAKE STREET DENVER, CO. 80202 TEL 303.675.0041 FAX 303.675.0052
PENTHOUSE, 225 ARIZONA AVENUE SANTA MONICA, CA 90401 TEL 310.394.0273 FAX 310.394.2424

VAN TILBURG, BANVARD & SODERBERGH, AIA
ARCHITECTURE · PLANNING · INTERIORS

PROJECT: 9985
DRAWN: RAB CHECKED: RP

LANDSCAPE CONSTRUCTION DETAILS

L1.3

PLOT DATE: 29 NOVEMBER, 2001

ARCHSTONE-PLAYA-DEL-REY