CDET-530

LEGEND

1. STUCCO FINISH TO MATCH ARCHITECTURE
2. SIGN PLAQUE BY OTHERS
3. #4 VERTICAL REBAR EACH CORNER W/ #3 TIES @ 24" O.C.
4. CONCRETE FOOTING; SIZE AS PER STRUCTURAL ENGINEER
5. 8X8X16 CMU; IN ALTERNATE COURSES. GROUT ALL CELLS.
6. COMPACTED SOIL GRADE
7. 18" DIAMETER BALL FINIAL TO MATCH ARCHITECTURE ENTRY FINIALS
8. FINISH GRADE

NOTE: FINAL FOOTING AND REINFORCING PER STRUCTURAL ENGINEER.

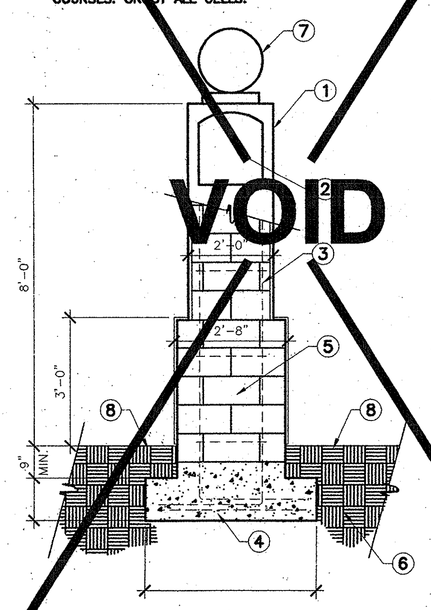

GARAGE SIGN COLUMN ELEVATION — SCALE: 1/2"=1'-0" — 9

CDET-531

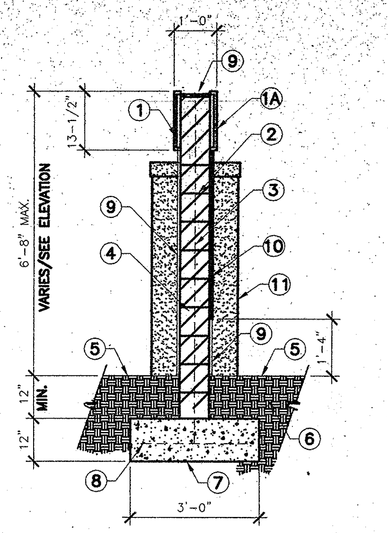

LEGEND

1. PRE-CAST QUOINS BOTH SIDES
1A. PRECAST KEYSTONE BOTH SIDES
2. #4 REBAR HORIZONTAL @ 24" O.C.
3. #5 REBAR VERTICAL @ 16 O.C. ALTERNATE BEND IN FOOTING.
4. 8X8X16 CMU GROUT SOLID
5. FINISHED GRADE
6. COMPACTED SUB-GRADE PER ENGINEERING SOILS REPORT
7. CONCRETE FOOTING; FINAL SIZE BY STRUCTURAL ENGINEER.
8. #4 REBAR, CONTINUOUS; 3 TOTAL
9. STUCCO FINISH TO MATCH ARCHITECTURE
10. SIGN BY OTHERS
11. CONCRETE PIER BEYOND

SIGN WALL SECTION — SCALE: 1/2"=1'-0" — 6

CDET-531

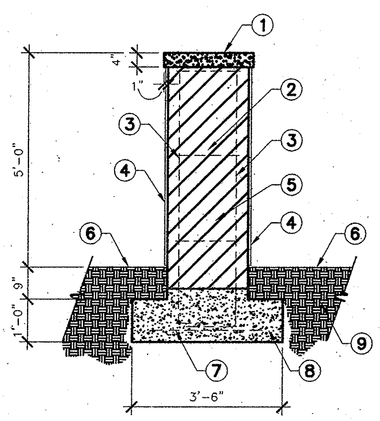

LEGEND

1. PRE-CAST CAPS TO MATCH QUOINS
2. #3 TIES @ 24" O.C.
3. #4 VERTICAL REBAR @ EACH CORNER, ALTERNATE BEND IN FOOTING
4. STUCCO FINISH TO MATCH ARCHITECTURE
5. 8X8X16 CMU
6. FINISHED GRADE
7. #4 REBAR BOTH WAYS
8. CONCRETE FOOTING
9. COMPACTED SUB-GRADE PER ENGINEERING SOILS REPORT

NOTE:
FINAL FOOTING AND REINFORCING PER STRUCTURAL ENGINEER.

SIGN WALL-PIER SECTION — SCALE: 1/2"=1'-0" — 7

W6102029

BRIAN L. COCHRAN ASSOCIATES, INC.

CAD DETAILS

SCALE:	3/4"=1'-0"
CAD FILE:	W6102029
DATE:	02/28/94
DRAWN BY:	A.VARTARIAN

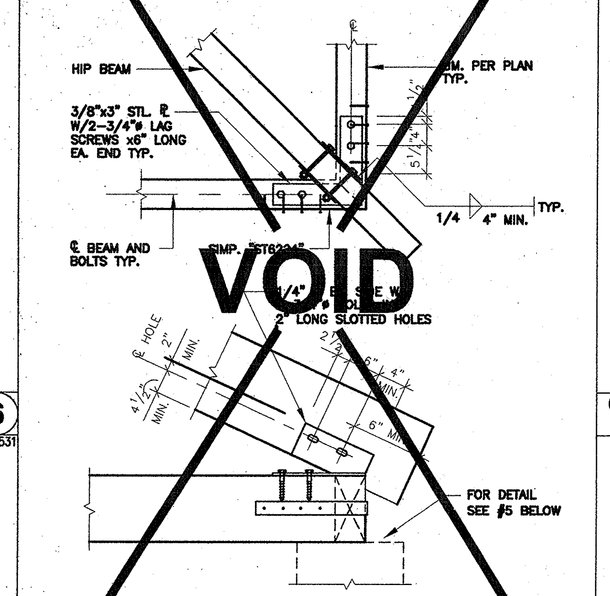

GAZEBO-HIP CONNECTION -PLAN/ELEVATION — SCALE: 3/4"=1'-0" — 4

CDET-536

LEGEND

1. 2X2 WOOD RAFTERS @ 9" O.C.E.W. (RAFTERS)
2. 3X 12 RAFTERS @ 18" O.C.
3A. UPPER DECK FIN. SURF. @ SPA
3B. FINISH SURFACE AT POOL DECK
4. PRECAST BULLNOSE WALL CAP
5. 8" BLOCK WALL (BEHIND)
6. 8X12 WOOD BEAM; (BOTH WAYS)
7. STUCCO FINISH
8. #5 HAIRPIN; (BOTH WAYS)
9. 16" CMU COLUMN; GROUT CELLS SOLID.
10. METAL FASTENER; REFER TO DETAIL, THIS SHEET.
11. ← #5'S (VERT.).
12. #3 TIES @ 8" O.C. HORIZ.
13. CONCRETE FOOTING
14. COMPACTED SUB-GRADE PER ENGINEER'S SOIL REPORT.
14. 4-#4'S EACH WAY.
14. 4" SQ.X 3/16" TUBULAR STEEL POST.
14. #4'S @ 16" O.C.E.W.

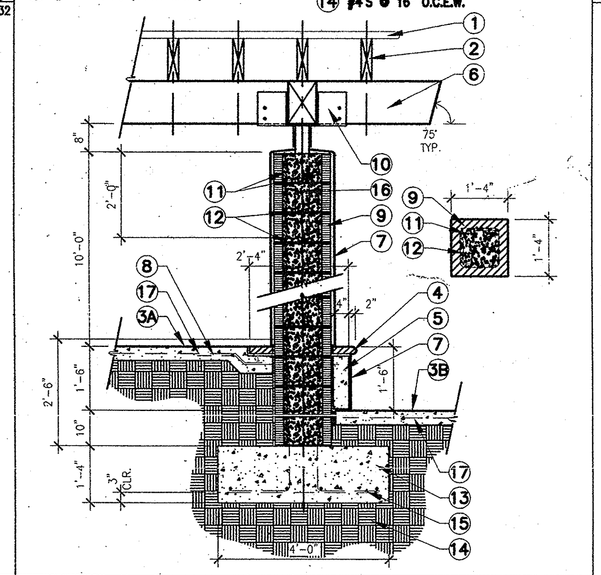

GAZEBO FOOTING - SECTION — SCALE: 1/2"=1'-0" — 5

CDET-535

LEGEND

1. 2X2 WOOD RAFTERS @ 9" O.C. (LATTICE)
2. 3X12 WOOD RAFTERS @ 18" O.C.
3. 8X12 WOOD BEAMS (BOTH WAYS).
4. 4"X4"X3/16" TUBULAR STEEL POST.
5. 3/4"X1 1/2" TUBULAR STEEL (HORIZ.); TOP & BOTTOM.
6. 3/4"X1 1/2" TUBULAR STEEL POSTS.
7. 1/2" BAR STEEL GRID @ 4" O.C. (NO OVERLAP, GRID TO BE FLUSH.
8. GUARD RAIL; FRONT SIDE ONLY
9. UPPER GRILL WORK; ALL FOUR SIDES.
10. SPA
11. HANDICAPPED PEDESTRIAN RAMP
12. 16" SQUARE CMU COLUMN W/ STUCCO FINISH
13. METAL CONNECTOR; REFER TO DETAIL, THIS SHEET.
14. STAIRS
15. HAND RAIL
16. UPPER DECK
17. MASONRY WALL
18. POOL DECK

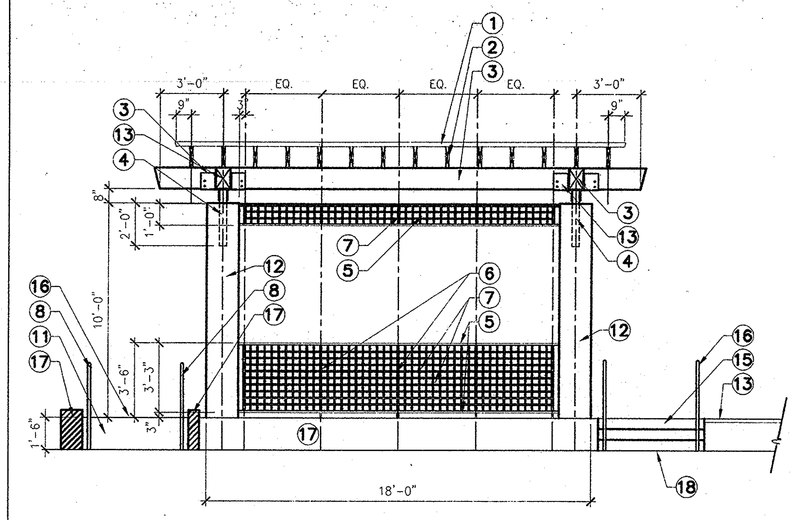

GAZEBO - ELEVATION — SCALE: 1/4"=1'-0" — 1

CDET-534

LEGEND

1. 2X2 WOOD RAFTERS @ 9" O.C. (LATTICE).
2. 3X12 WOOD RAFETERS @ 18" O.C.
3. 8X12 WOOD BEAM (BOTH WAYS)
4. 16" SQ. CMU COLUMN W/ STUCCO FINISH
5. 3/4"X1 1/2" TUBULAR STEEL POSTS.
6. WALL BELOW
7. EDGE OF PRECAST CAP
8. UPPER DECK
9. STEPS
10. POOL DECK
11. PEDESTRIAN HANDICAPPED RAMP.
12. MASONRY WALL.
13. CONCRETE CONTROL JOINT (TYP.).
14. CONCRETE EXPANSION JOINT.
15. 1/2" BAR STEEL GRID @ 4" O.C. (NO OVER LAP GRID TO BE FLUSH).

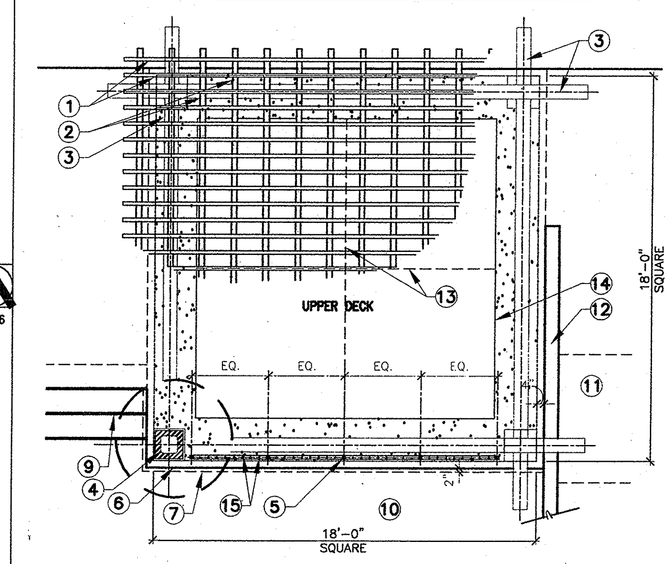

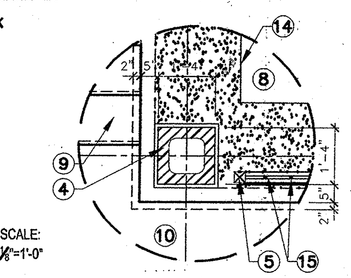

SCALE: 1/8"=1'-0"

GAZEBO PLAN — SCALE: 1/4"=1'-0" — 2

CDET-537

LEGEND

1. 8X12 WOOD BEAM (BOTH WAYS).
2. SIMPSON CCC METAL FASTENER.
3. 7 GA. SRRRUP.
4. 4" SQ.X3/16" TUBULAR STEEL POST, 24" LONG; WELD TO STRAPS
5. WELD FLUSH
6. MST 48 FASTENER.
7. MASONRY COLUMN; REFER TO DETAIL, THIS SHEET.

• GALV. STEEL BOLTS, NUTS AND WASHERS; SIZE PER MANUFACTURER'S SPECIFICATIONS.

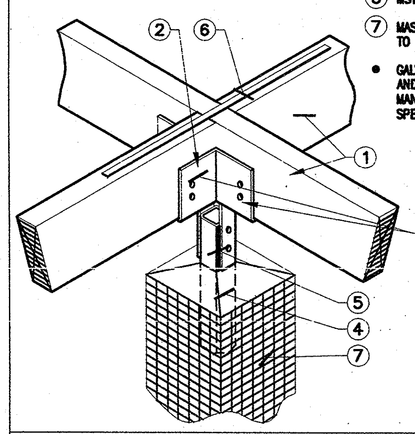

GAZEBO CONNECTION TO CMU COLUMN -ISOMETRIC — SCALE: 3/8"=1'-0" — 3

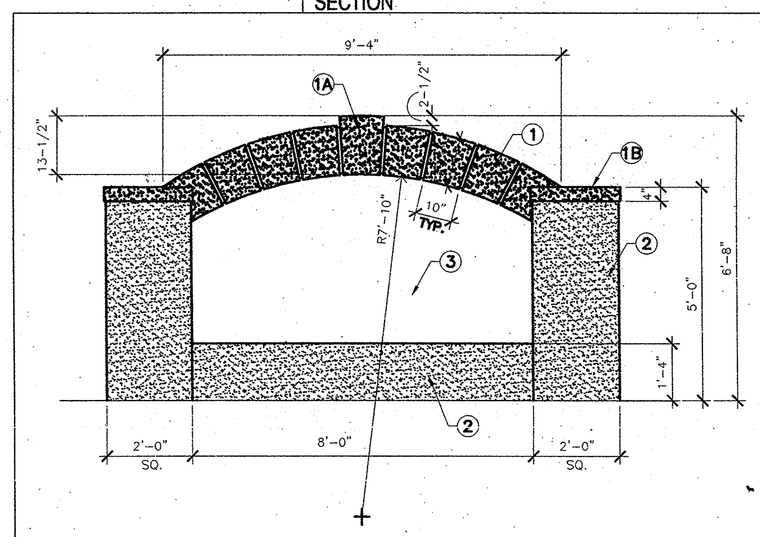

LEGEND

1. PRE-CAST QUOINS BOTH SIDES
1A. PRE-CAST KEYSTONE BOTH SIDES
1B. PRE-CAST CAP TO MATCH QUOINS
2. STUCCO FINISH TO MATCH ARCHITECTURE
3. SIGN BY OTHERS

SIGN WALL ELEVATION — SCALE: 1/2"=1'-0" — 8

SHEET INDEX

L1.1A LANDSCAPE HARDSCAPE REFERENCE PLAN
L1.1B LANDSCAPE HARDSCAPE LAYOUT & DIMENSIONING PLAN
L1.2 LANDSCAPE HARDSCAPE ENLARGEMENT PLAN
L1.3 LANDSCAPE CONSTRUCTION DETAILS
L1.4 LANDSCAPE CONSTRUCTION DETAILS
L1.5 LANDSCAPE CONSTRUCTION DETAILS
L2.1 LANDSCAPE IRRIGATION PLAN
L2.2 LANDSCAPE IRRIGATION DETAILS
L3.11 LANDSCAPE PLANTING PLAN - TREES & GROUND COVER
L3.12 LANDSCAPE PLANTING PLAN - TREES & GROUND COVER
L3.13 LANDSCAPE PLANTING PLAN - TREES & GROUND COVER
L3.14 LANDSCAPE PLANTING PLAN - TREES & GROUND COVER
L3.21 LANDSCAPE PLANTING PLAN - SHRUBS & VINES
L3.22 LANDSCAPE PLANTING PLAN - SHRUBS & VINES
L3.23 LANDSCAPE PLANTING PLAN - SHRUBS & VINES
L3.24 LANDSCAPE PLANTING PLAN - SHRUBS & VINES
L3.3 LANDSCAPE PLANTING DETAILS
L4.1 LANDSCAPE GRADING PLAN

TGP
LANDSCAPE ARCHITECTURE
SITE PLANNING URBAN DESIGN
17000 VENTURA BLVD., SUITE 205
ENCINO, CALIFORNIA 91316
FAX: 818-907-0491 TEL: 818-907-9490

PLAYA DEL REY

8700 PERSHING DRIVE
PLAYA VISTA, CALIFORNIA 90293

ARCHSTONE COMMUNITIES TRUST
8801 Wall Street, Suite 800
Austin, Texas 78754

ISSUE	DATE	DESCRIPTION
	08.18.00	PROGRESS & REVIEW SET
	10.16.00	40% SUBMISSION SET
	11.10.00	CITY SUBMISSION
	12.12.00	PLANNING DEPT. SUBMITTAL
	02.05.01	BID SET
	04.18.01	REVIEW SET
	07.20.01	BID SET
A	10.05.01	GMAX SET

SUITE 170, 1660 BLAKE STREET
DENVER, CO. 80202
TEL 303.675.0041 FAX 303.675.0052

PENTHOUSE, 225 ARIZONA AVENUE
SANTA MONICA, CA 90401
TEL 310.394.0273 FAX 310.394.2424

VAN TILBURG, BANVARD & SODERBERGH, AIA
ARCHITECTURE · PLANNING · INTERIORS

PROJECT: 9985
DRAWN: RAB CHECKED: RP

LANDSCAPE CONSTRUCTION DETAILS

A L1.5

ARCHSTONE PLAYA DEL REY

PLOT DATE: 29 NOVEMBER, 2001