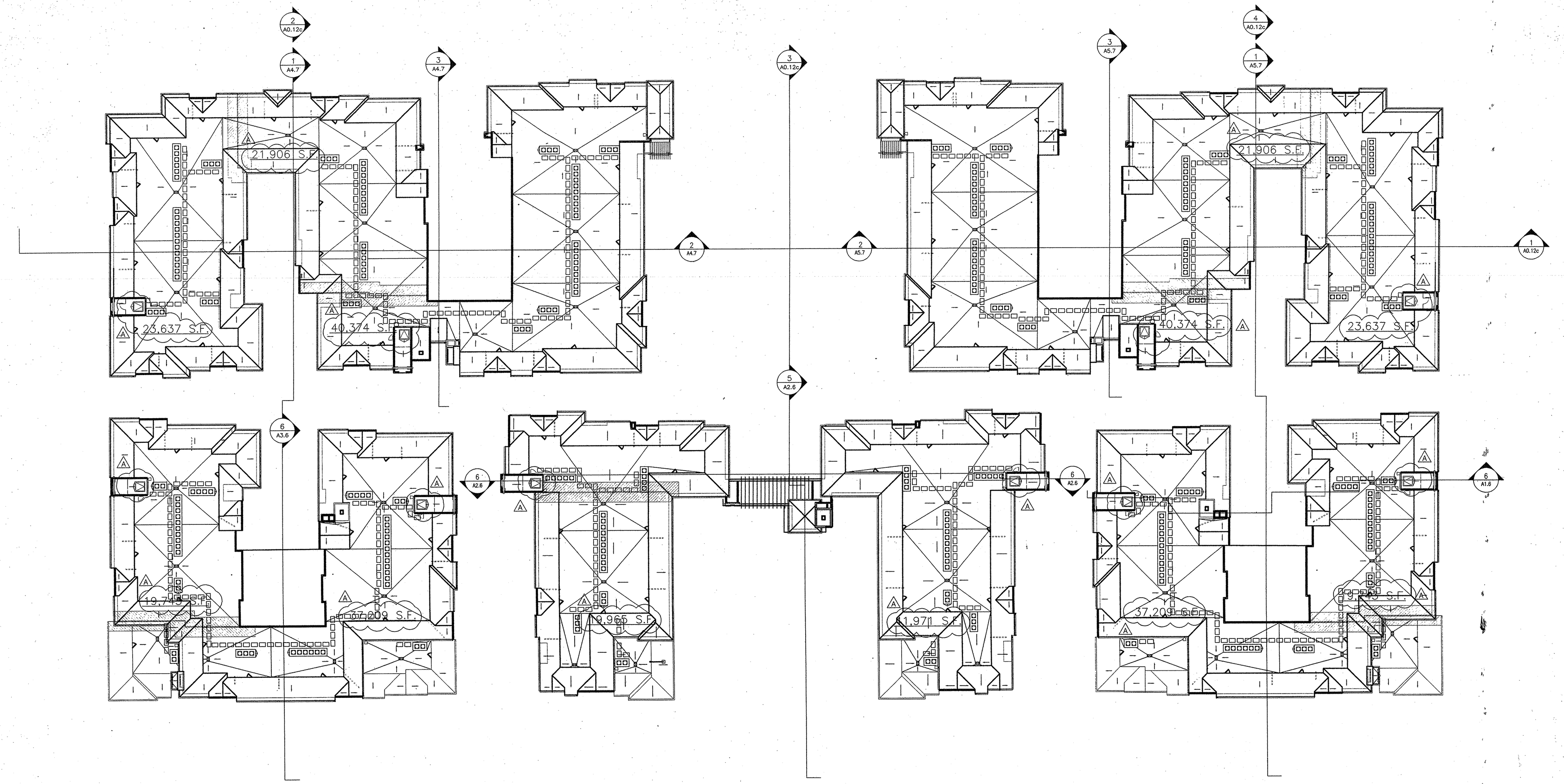

PLAN NOTES

1. SQUARE FOOTAGES DENOTE TOTAL AREA OF AREA SEPARATION SPACES. SEE SHEET A0.01a FOR ALLOWABLE AREA SEPARATIONS.

PLAN NORTH

NOTE: ALL DIRECTIONAL REFERENCES RELATE TO PLAN NORTH.

PLAYA DEL REY

8700 PERSHING DRIVE
PLAYA DEL REY, CALIFORNIA 90293

ARCHSTONE COMMUNITIES
217 Technology Drive, Second Floor
Irvine, California 92618

ISSUE	DATE	DESCRIPTION
	09.06.00	DESIGN DEVELOPMENT
	10.17.00	PROGRESS SET
	11.10.00	BUILDING DEPT. SUBMITTAL
	03.02.01	PROGRESS SET
	04.18.01	REVIEW SET
	05.28.01	REVIEW SET
	07.20.01	BID SET
A	10.05.01	GMAX SET

SUITE 170, 1860 BLAKE STREET
DENVER, CO. 80202
TEL 303.675.0041 FAX 303.675.0052

PENTHOUSE, 225 ARIZONA AVENUE
SANTA MONICA, CA 90401
TEL 310.394.0273 FAX 310.394.2424

VAN TILBURG, BANVARD & SODERBERGH, AIA
ARCHITECTURE · PLANNING · INTERIORS

PROJECT: 9985
DRAWN:
CHECKED:

OVERALL ROOF PLAN
SCALE: 1" = 20'-0"

A0.12d