NOTES:
1. THE TENANT LOCKS IN THE TOP TIER OF MAIL BOXES SHALL NOT BE MORE THAN 67" ABOVE THE FINISHED FLOOR AND THE INSIDE BOTTOM OF THE LOWEST TIER SHALL BE NO LESS THAN 28" ABOVE THE FINISHED FLOOR.

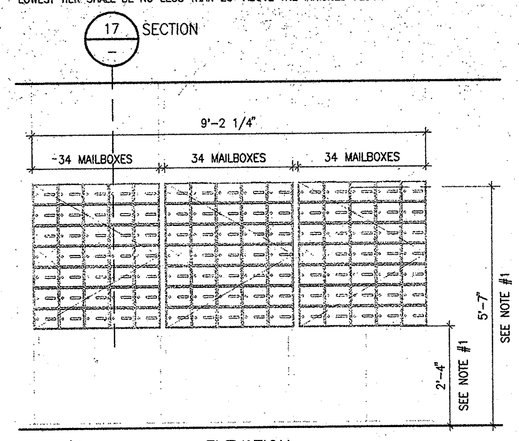


TYPICAL MAILBOX ARRAY ELEVATION DETAIL — SCALE 1/2"=1'-0" — 19

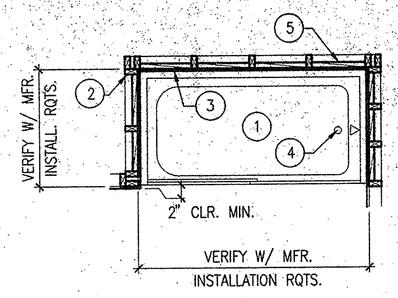


1. PREFABRICATED TUB/SHOWER UNIT VERIFY ALL REQTS. AND DIMS. PRIOR TO FRAMING.
2. 2x STUDS AT 16" oc. VERIFY UNIT SUPPORT, BLKG., AND NAIL FLANGE REQUIREMENTS
3. 5/8" TYPE X WATER RESISTANT GWB COMPLETELY LINES ALL WALL FRAMING UNDER TUB/ SHOWER UNIT.
4. COORDINATE DRAIN BLOCK-OUT/ CUT-OUT SIZE PER MFR. REQTS. 6"x6" MIN. TO 8"x8" MAX. VERIFY.
5. SOLID 2x BLKG. FOR GRAB BAR INSTALLATION. REFER TO TYPICAL HANDICAPPED DETAILS FOR HEIGHT RQTS.

PREFABRICATED TUB/SHOWER UNIT PLAN – ONE HOUR DETAIL — SCALE 1/2"=1'-0" — 15

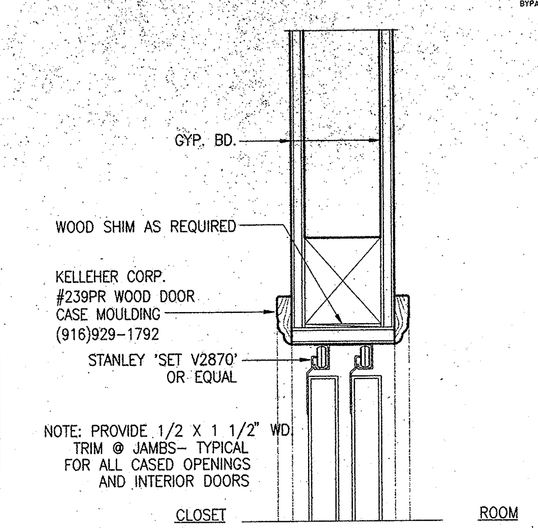


SLIDING DOOR HDR. DETAIL — SCALE 3"=1'-0" — 11

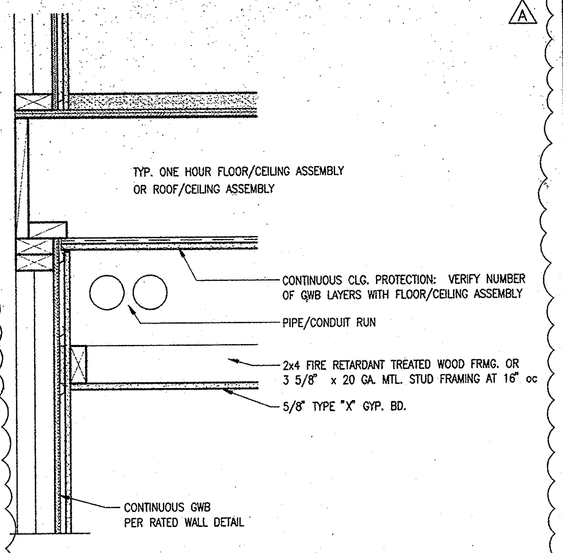


TYPICAL INTERIOR ONE HOUR CORRIDOR DETAIL — SCALE 1 1/2"=1'-0" — 7

NOTE: GUARDRAIL TO RESIST 50 LB. PER LINEAL FOOT HORIZONTAL FORCE APPLIED AT RIGHT ANGLE TO TOP RAIL & 200 LBS. AT ANY POINT PER UBC TABLE 16-B.

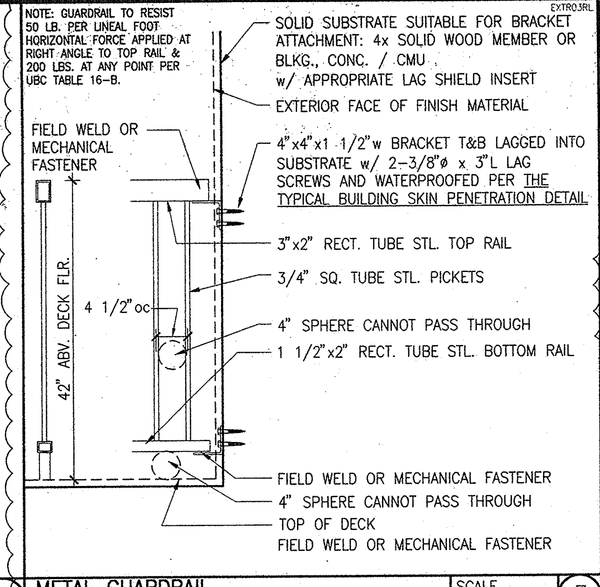


METAL GUARDRAIL DETAIL — SCALE 1"=1'-0" — 3


VAN TILBURG, BANVARD & SODERBERGH, AIA
ARCHITECTURE · PLANNING · INTERIORS
PENTHOUSE, 225 ARIZONA AVENUE
SANTA MONICA, CA 90401
TEL 310.394.0273 FAX 310.394.2424
SUITE 170, 1660 BLAKE STREET
DENVER, CO 80202
TEL 303.675.0041 FAX 303.675.0052


NOTES:
1. THE TENANT LOCKS IN THE TOP TIER OF MAIL BOXES SHALL NOT BE MORE THAN 67" ABOVE THE FINISHED FLOOR AND THE INSIDE BOTTOM OF THE LOWEST TIER SHALL BE NO LESS THAN 28" ABOVE THE FINISHED FLOOR.

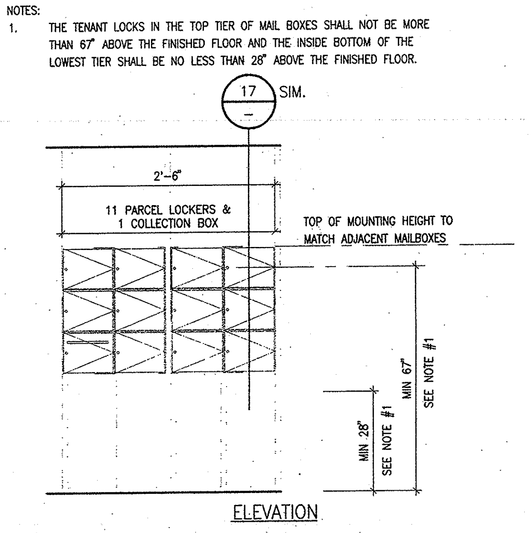


PARCEL BOXES & COLLECTION BOX ELEVATION DETAIL — SCALE 1/2"=1'-0" — 18

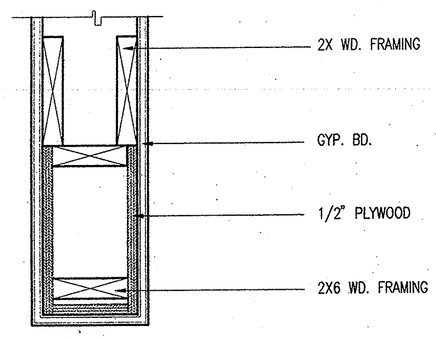


INTERIOR ARCHED OPENING HEAD DETAIL — SCALE 3"=1'-0" — 14

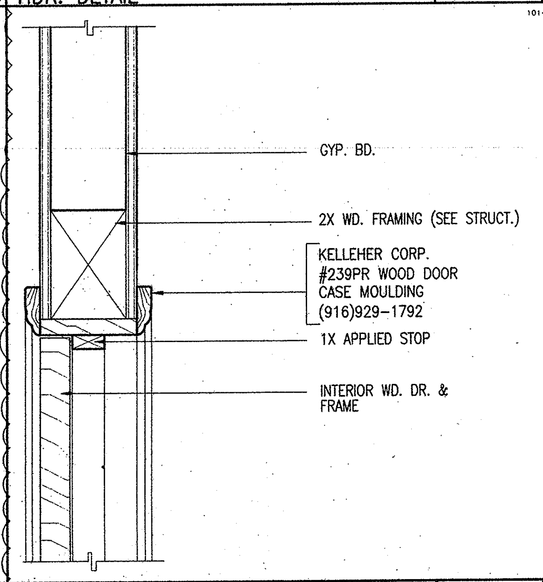


INTERIOR DOOR HEAD DETAIL /JAMB SIMILAR — SCALE 3"=1'-0" — 10

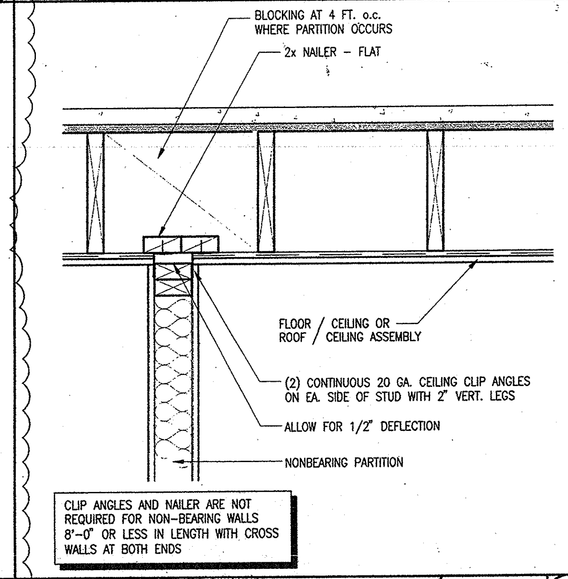


NON-BEARING PARTITION HEAD DETAIL PARALLEL TO JOISTS — SCALE 1 1/2"=1'-0" — 6

NOTE: GUARDRAIL TO RESIST 20 LB. PER LINEAL FOOT HORIZONTAL FORCE APPLIED AT RIGHT ANGLE TO TOP RAIL & 200 LBS. AT ANY POINT (PER UBC). HANDRAIL TO BE INSTALLED PER MANUFACTURERS SPECS. & DETAILS TO MEET THESE CRITERIA.

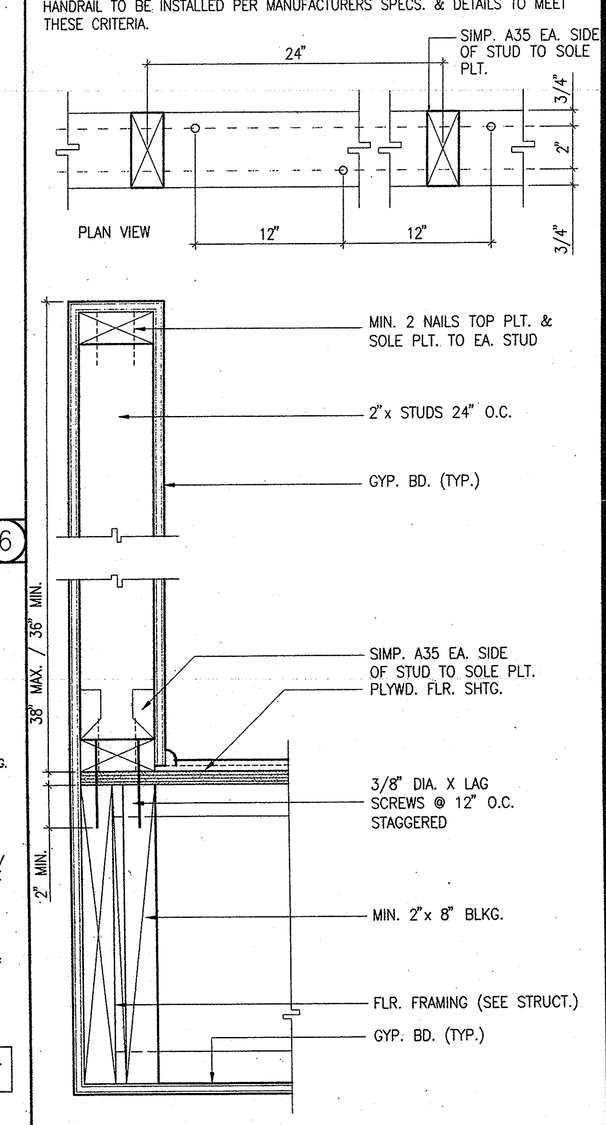


LIVING UNIT INTERIOR GUARDRAIL DETAIL — SCALE 3"=1'-0" — 2

NOTES:
1. THE TENANT LOCKS IN THE TOP TIER OF MAIL BOXES SHALL NOT BE MORE THAN 67" ABOVE THE FINISHED FLOOR AND THE INSIDE BOTTOM OF THE LOWEST TIER SHALL BE NO LESS THAN 28" ABOVE THE FINISHED FLOOR.

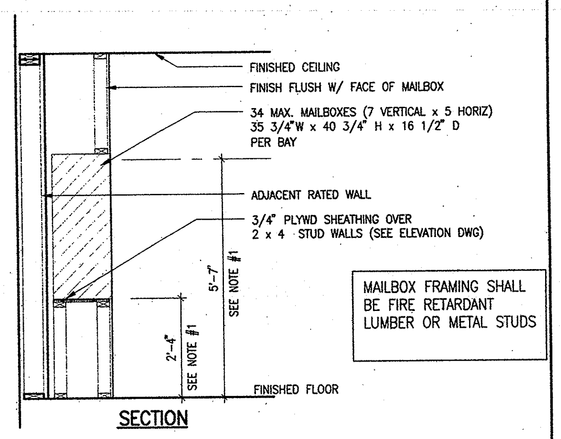


MAILBOX FRAMING SHALL BE FIRE RETARDANT LUMBER OR METAL STUDS

MAIL BOX SECTION — SCALE 1/2"=1'-0" — 17

NOTE: SECURE ACCESS PANEL TO WOOD FRAMING BY AN APPROVED U.L. AND MANUFACTORING METHOD.

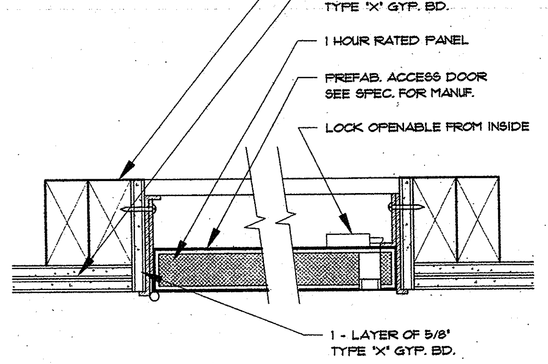


NOTE: WALL ACCESS PANEL DETAIL IS SIMILAR.

CEILING ACCESS PANEL 1 HOUR RATED (TYPICAL) — SCALE 3"=1'-0" — 13

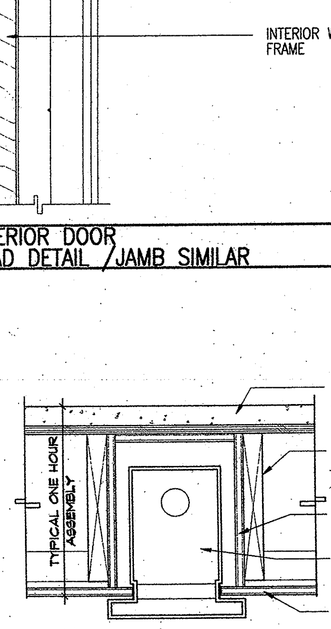


BATH EXHAUST FAN/ RECESSED CAN LIGHT — SCALE 1/2"=1'-0" — 4

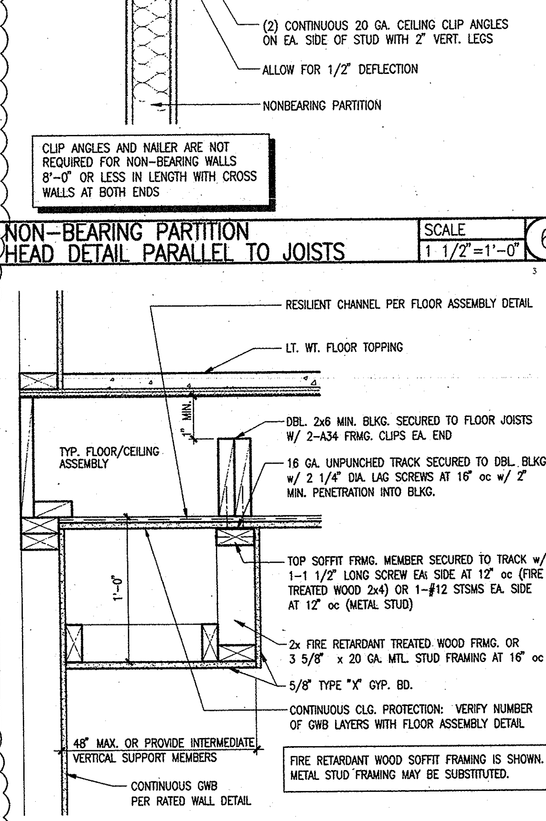


SOFFIT FRMG. PERP. TO FLOOR JOISTS ONE HOUR CONSTRUCTION — SCALE 1 1/2"=1'-0" — 5

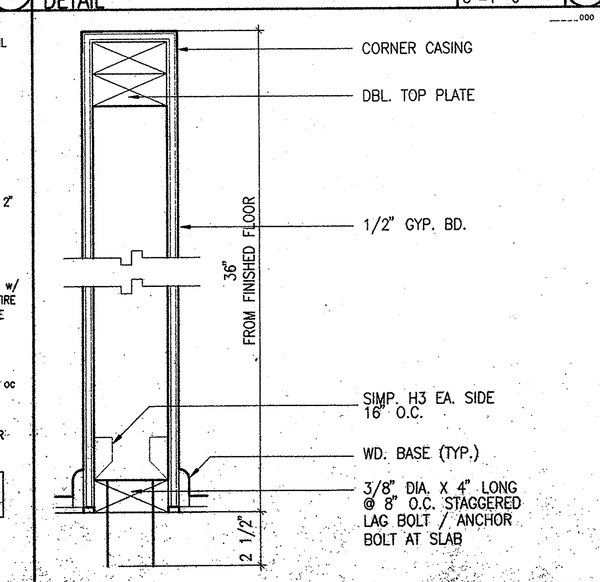


HALF WALL DETAIL — SCALE 3"=1'-0" — 1

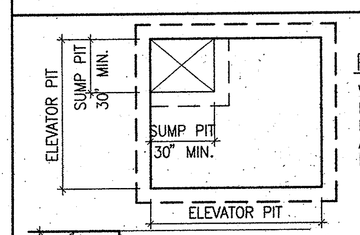


PLAN NO SCALE
VERIFY SUMP PIT REQ. w/ ELEVATOR MANUFACTURER & MECHANICAL ENGINEER. AVOID CONFLICTS w/ HYDRAULIC CYLINDER.

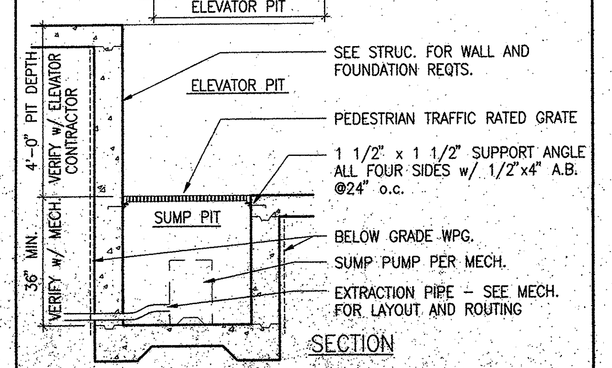


ELEVATOR PIT AND SUMP DETAIL — SCALE 1/2"=1'-0" — 16

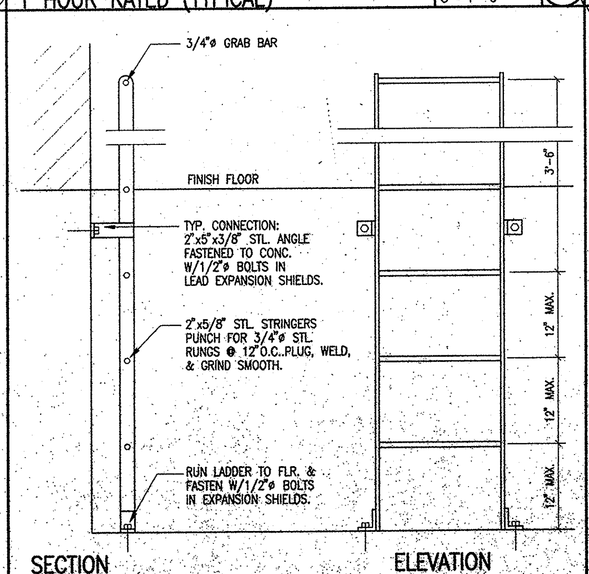


ELEVATOR PIT LADDER — NOT TO SCALE — 12

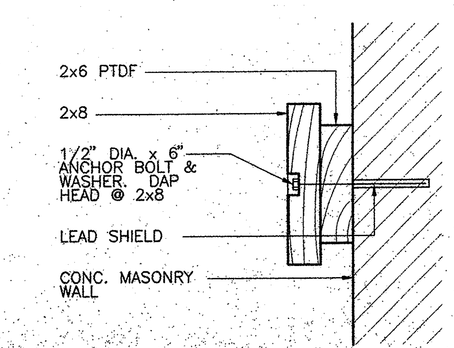


TRASH ENCLOSURE BUMPER DETAIL — SCALE 3"=1'-0" — 8

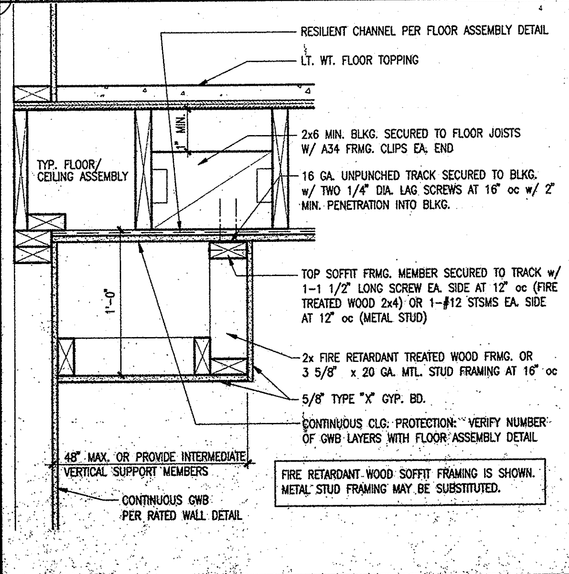


SOFFIT FRMG. PARALLEL TO FLOOR JOISTS – ONE HOUR CONSTRUCTION — SCALE 1 1/2"=1'-0" — 4

# PLAYA DEL REY
8700 PERSHING DRIVE
PLAYA DEL REY, CALIFORNIA 90293

ARCHSTONE COMMUNITIES
217 Technology Drive, Second Floor
Irvine, California 92618

| ISSUE | DATE | DESCRIPTION |
|---|---|---|
| | 09.06.00 | DESIGN DEVELOPMENT |
| | 10.17.00 | PROGRESS SET |
| | 11.10.00 | BUILDING DEPT. SUBMITTAL |
| | 03.02.01 | PROGRESS SET |
| | 04.18.01 | REVIEW SET |
| | 06.28.01 | REVIEW SET |
| | 07.20.01 | BID SET |
| 4 | 10.05.01 | GMAR SET |

PROJECT: 9985
DRAWN:
CHECKED:

INTERIOR DETAILS

A9.7