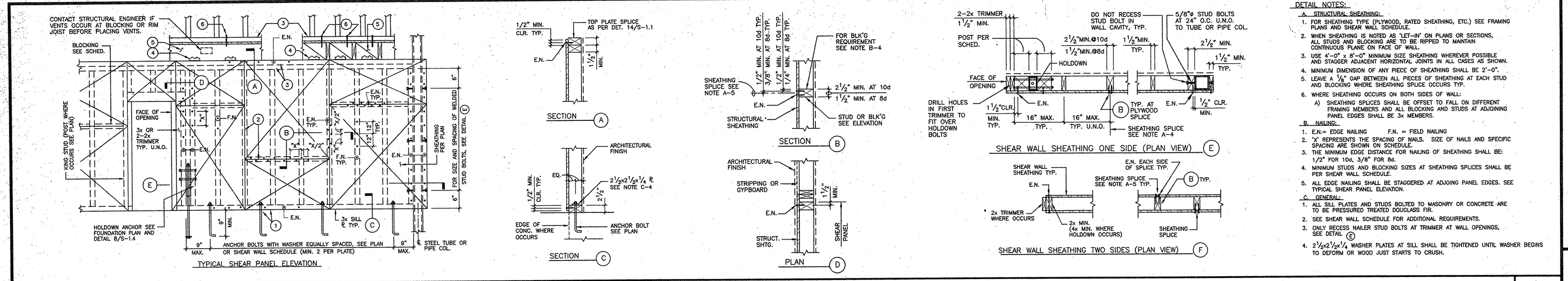

DETAIL NOTES:

A. STRUCTURAL SHEATHING:

1. FOR SHEATHING TYPE (PLYWOOD, RATED SHEATHING, ETC.) SEE FRAMING PLANS AND SHEAR WALL SCHEDULE.
2. WHEN SHEATHING IS NOTED AS 'LET-IN' ON PLANS OR SECTIONS, ALL STUDS AND BLOCKING ARE TO BE RIPPED TO MAINTAIN CONTINUOUS PLANE ON FACE OF WALL.
3. USE 4'-0" x 8'-0" MINIMUM SIZE SHEATHING WHEREVER POSSIBLE AND STAGGER ADJACENT HORIZONTAL JOINTS IN ALL CASES AS SHOWN.
4. MINIMUM DIMENSION OF ANY PIECE OF SHEATHING SHALL BE 2'-0".
5. LEAVE A 1/8" GAP BETWEEN ALL PIECES OF SHEATHING AT EACH STUD AND BLOCKING WHERE SHEATHING SPLICE OCCURS TYP.
6. WHERE SHEATHING OCCURS ON BOTH SIDES OF WALL:
   A) SHEATHING SPLICES SHALL BE OFFSET TO FALL ON DIFFERENT FRAMING MEMBERS AND ALL BLOCKING AND STUDS AT ADJOINING PANEL EDGES SHALL BE 3x MEMBERS.

B. NAILING:

1. E.N.= EDGE NAILING F.N. = FIELD NAILING
2. "X" REPRESENTS THE SPACING OF NAILS. SIZE OF NAILS AND SPECIFIC SPACING ARE SHOWN ON SCHEDULE.
3. THE MINIMUM EDGE DISTANCE FOR NAILING OF SHEATHING SHALL BE: 1/2" FOR 10d, 3/8" FOR 8d.
4. MINIMUM STUDS AND BLOCKING SIZES AT SHEATHING SPLICES SHALL BE PER SHEAR WALL SCHEDULE.
5. ALL EDGE NAILING SHALL BE STAGGERED AT ADJOING PANEL EDGES. SEE TYPICAL SHEAR PANEL ELEVATION.

C. GENERAL:

1. ALL SILL PLATES AND STUDS BOLTED TO MASONRY OR CONCRETE ARE TO BE PRESSURED TREATED DOUGLASS FIR.
2. SEE SHEAR WALL SCHEDULE FOR ADDITIONAL REQUIREMENTS.
3. ONLY RECESS NAILER STUD BOLTS AT TRIMMER AT WALL OPENINGS, SEE DETAIL E
4. 2½x2½x¼ WASHER PLATES AT SILL SHALL BE TIGHTENED UNTIL WASHER BEGINS TO DEFORM OR WOOD JUST STARTS TO CRUSH.

TYPICAL SHEAR PANEL ELEVATION, DETAILS AND NOTES — 1

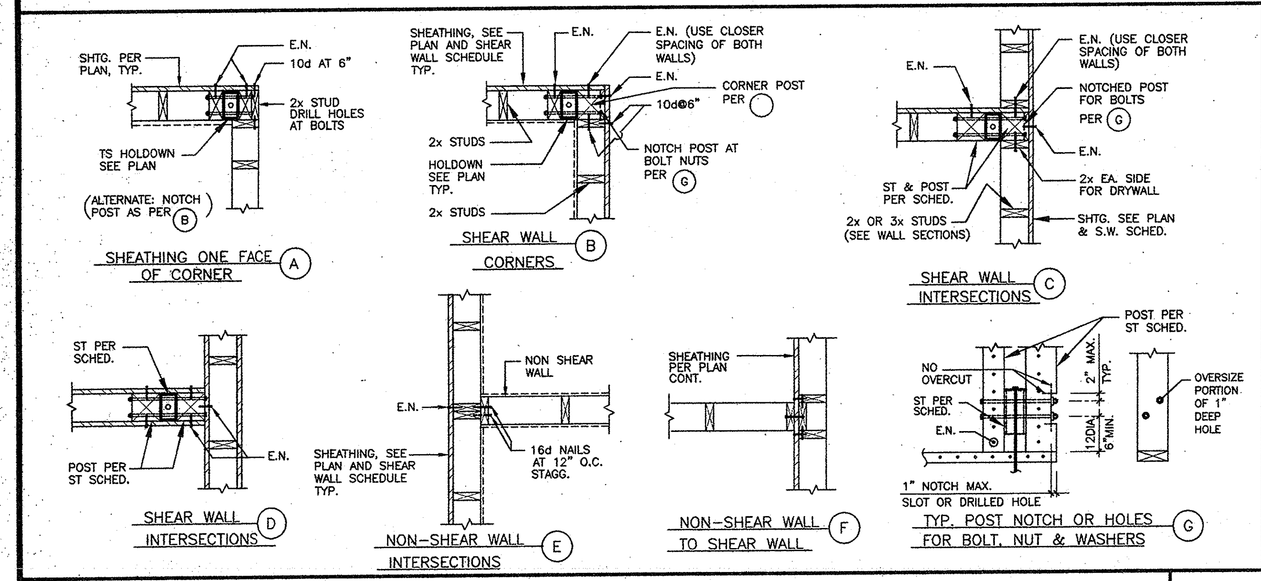

TYPICAL SHEAR WALL CORNERS AND INTERSECTIONS U.N.O. — 2

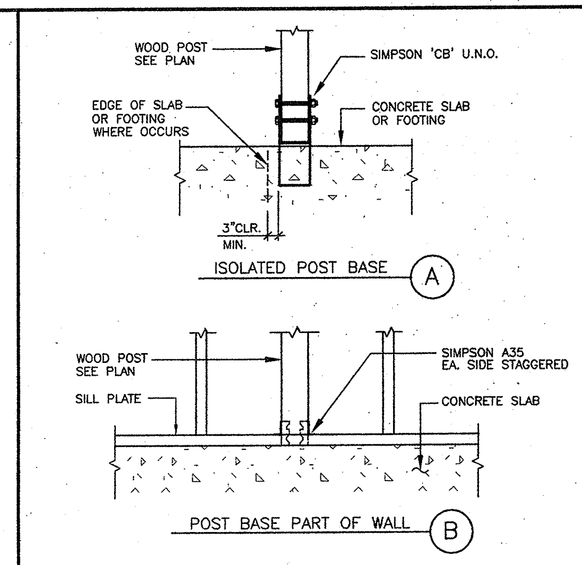

TYPICAL POST BASE — 3

SHEAR WALL SCHEDULE

MARK	APA RATED PLYWOOD THK.	TYPE	INDEX	PANEL NAILING SIZE AND SPACING SIZE	E.N.	F.N.	3x SILL PLATE W/ ANCHOR BOLT AT FOUNDATION OR CONCRETE SLAB (7" MIN. EMBED.) (1)	MIN. STUD AND BLK'G SIZE AT ADJOING PANEL EDGES (2)	MIN. TOP AND SOLE PLATE THICKNESS U.N.O. (3)	TOP PLATE CONN. TO JOIST OR BLOCKING W/ SIMPSON "A35" U.N.O. (4)	JOIST OR BLOCKING THICKNESS AT FLOOR (5)	SOLE PLATE CONN. AT FLOOR W/ 16d NAILS, 3/8" ø LAG SCREWS OR SDS WOOD SCREWS (6)	SHEAR CAPACITY (#/FT)
1	3/8"	EXPOSURE 1	24/0	8d AT	4,	12	5/8" AT 48" O.C. (OR) 1/2" AT 48" O.C.	2x	2x	16" O.C.	2x	16d AT 4" O.C. SDS 1/4 AT 12" O.C.	200
2 (E 2 F)	1/2"	STRUCT 1	32/16	10d AT	4,	12	5/8" AT 32" O.C.	2x	2x	12" O.C.	2x	SDS 1/4 AT 6" O.C.	450
							5/8" AT 16" O.C.	3x	2x	12" O.C. EA. FACE	3x	3/8"ø LAGS AT 6"	900
3 (E 3 F)	1/2"	STRUCT 1	32/16	10d AT	3,	12	5/8" AT 24" O.C.	3x	2x	8" O.C.	3x	SDS 1/4 AT 4" O.C.	665
							5/8" AT 12" O.C.	3x	2x	8" O.C. EA. FACE	3x	3/8"ø LAGS AT 4"	1330
4	1/2"	STRUCT 1	32/16	10d AT	2,	12	5/8" AT 16" O.C.	3x	2x	6" O.C.	3x	3/8"ø LAGS AT 8"	801
													870

NOTES:

1. FOR TYPICAL SHEAR WALL DETAIL SEE /S-
2. ALL PANEL EDGES ARE TO BE BLOCKED.
3. FOR POST SIZE WITH HOLDOWN SEE PLAN AND DETAILS.
4. 3/8" DIAMETER LAG SCREWS ARE TO BE 7" LONG. MIN.
5. E.N.= EDGE NAILING F.N.= FIELD NAILING
6. HILTI KWIK BOLT II SHALL BE USED IN LIEU OF ANCHOR BOLTS AT EXISTING FOUNDATION OR SLAB SEE DETAILS FOR EDGE DISTANCE REQUIREMENTS.
7. ALL NAILS SHALL BE COMMON WIRE NAILS, SINKER OR BOX NAILS ARE NOT PERMITTED.
8. ALL PLYWOOD PANELS SHALL BE 'APA' RATED 4 PLY OR 5-PLY SHEATHING, EXCEPT 3/8" PLYWOOD WHICH CAN BE 3 PLYS.
9. OVERDRIVEN NAILS INTO PLYWOOD SHEATHING ARE NOT ACCEPTABLE. ANY SHEATHING AND DAMAGED STUDS WITH OVERDRIVEN NAILS SHALL BE REPLACED AT CONTRACTOR'S EXPENSE.
10. E 3 F PLYWOOD SHEATHING EA FACE
11. PILOT HOLES SHALL BE PREDRILLED FOR LAG SCREWS AND THE THREADED PORTION OF THE SCREW SHALL BE INSERTED BY TURNING WITH A WRENCH.
12. AT TJI'S WHERE LAG SCREWS ARE USED AT SILL PLATES BLOCKING SHALL BE 2-11/16" PARALLAM (PSL) OR 3 1/2" TIMBERSTRAND (LSL). TJI BLOCKING SHALL NOT BE USED.
13. SDS 1/4 = SIMPSON STRONG-DRIVE WOOD SCREWS; 1/4" DIAMETER x 4 1/2 LONG
14. SEE FLOOR NOTES FOR HOLDOWN DETAILS.

W6114008

SHEAR WALL SCHEDULE — 4

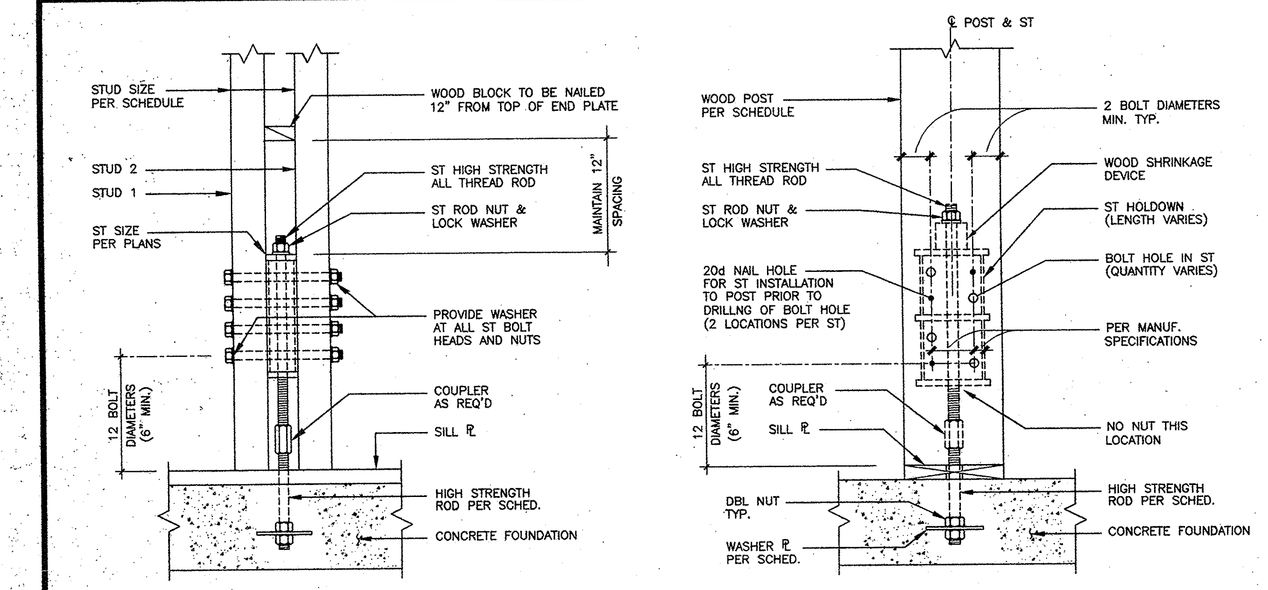

MATERIAL AND INSTALLATION REQUIREMENTS:

1. ALL 2x, 3x POSTS TO BE #2 GRADE OR BETTER, ALL 4x AND LARGER POSTS TO BE #1 GRADE.
2. ALL THREADED ROD ANCHOR BOLTS SHALL BE ASTM A193 GRADE B7.
3. ALL POST BOLT NUTS PER ASTM A563, GRADE A. ALL NUTS AT HIGH STRENGTH ROD SHALL BE ASTM A194 2H.
4. COUPLERS SHALL DEVELOP THE STRENGTH OF THE THREADED RODS AND SHALL BE OF COMPARABLE GRADE AND STRENGTH OF NUT. COUPLER SHALL HAVE VIEW HOLE TO VERIFY EXTENT OF THREADED ROD DEPTH.
5. ALL WASHERS BETWEEN NUTS AND WOOD TO BE ASTM F844. ALL LOCK WASHERS BETWEEN NUTS AND BEARING PLATES TO BE GRADE 8.
6. "ST" TO BE CENTERED ON POST AS MUCH AS POSSIBLE.
7. BOLT HOLES IN POSTS SHALL BE 1/32 INCH MINIMUM, 1/16 INCH MAXIMUM LARGER THAN THE BOLT.
8. ALL ANCHOR ROD NUTS TO HAVE A FINAL INSTALLATION TORQUE OF 50 ±10 FT-LBS JUST PRIOR TO CLOSING OF THE WALL.

INSTALLATION SEQUENCE:

1. INSTALL STUD 1. IF POSSIBLE, ALIGN STUD 1 RELATIVE TO ANCHOR.
2. INSTALL ST ON ROD AS SHOWN.
3. NAIL ST TO STUD 1. ENSURE THAT MINIMUM BOLT END AND EDGE DISTANCES ARE MAINTAINED.
4. DRILL BOLT HOLES IN STUD 1 USING ST AS A DRILL JIG.
5. INSTALL STUD 2 AGAINST ST AS SHOWN.
6. DRILL HOLES IN STUD 2 USING HOLES IN STUD 1 AND ST AS DRILL JIG.
7. INSTALL ST BOLTS.
8. TILT UP SANDWICH TIE ASSEMBLY AND ATTACH ST TO ANCHOR BOLT (COUPLER AS REQUIRED).
9. TIGHTEN ST ROD NUT AND WASHER. RETIGHTEN BEFORE ENCLOSING WALL.

INSPECTIONS:

THE DEPUTY INSPECTOR SHALL VERIFY THE FOLLOWING:

1. "ST" SIZE AND LOCATION WITH THE FOUNDATION.
2. ANCHOR BOLTS HAVE MINIMUM EMBEDMENT INTO THE FOUNDATION.
3. COUPLER CONNECTION FOR FULL GRIP OF ANCHOR BOLT.
4. FIRST POST BOLT OF "ST" HOLDOWN IS 12 BOLT DIAMETERS (6 INCH MINIMUM) FROM THE END OF THE POST.
5. VERIFY THAT POST BOLT HOLES ARE NOT OVERSIZED AND BOLT HOLES ARE NOT LOCATED LESS THAN 2 BOLT DIAMETERS FROM CENTERLINE OF BOLT TO EDGE OF POST.
6. ANCHOR ROD SLOPE DOES NOT EXCEED 1:12 FROM AXIS OF THE WOOD POST AND THAT ANCHOR ROD IS NOT BENT.
7. VERIFY WOOD BLOCK IS LOCATED 12 INCHES UP ABOVE "ST" HOLDOWN.
8. ALL BOLTS TIGHTENED BEFORE CLOSING IN OF WALL

CONDITION OF APPROVAL (RR 25334)

1. THE CT CONTINUITY TIES, T2 TENSION TIES, DS DRAGLINE STRUT AND EP/EPC EXTERIOR PLATE SHALL BE MANUFACTURED IN A CITY OF LOS ANGELES LICENSED FABRICATOR SHOP.

NOTE:
WOOD SHRINKAGE COMPENSATING DEVICES ARE REQUIRED AT ALL FLOOR LEVELS. THE 'Z4 AUTO TAKE-UP' SHRINKAGE DEVICE BY COMMINS MFG INC. IS ACCEPTABLE OR EQUAL.

ZONE FOUR SANDWICH TIE (ST) HOLDOWN — (ICBO #ER5302, LA RR #25334) — 5

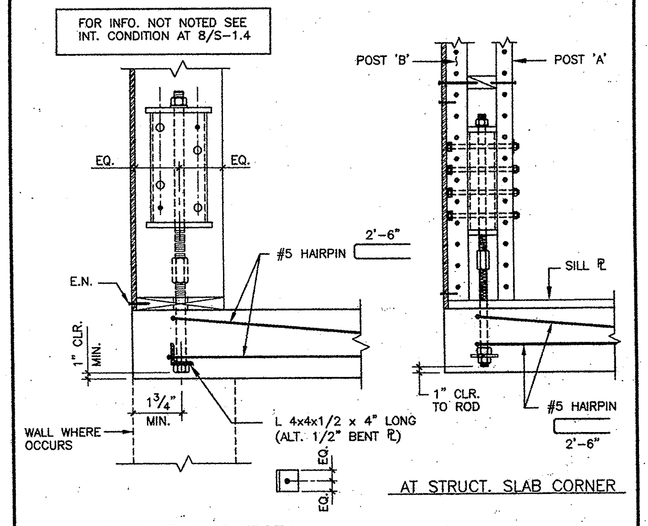

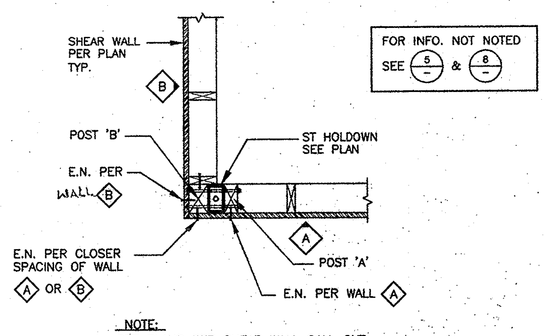

CORNER POST SCHEDULE	
POST 'A'	POST 'B' (MIN.)
2x	3x
3x	4x
4x	6x

NOTES:

1. MIN. POST 'A' SIZE PER ST SCHEDULE.
2. POST 'B' TO BE SAME SIZE FULL HT. OF BUILDING.

ST AT SLAB CORNER AND EDGE — 6

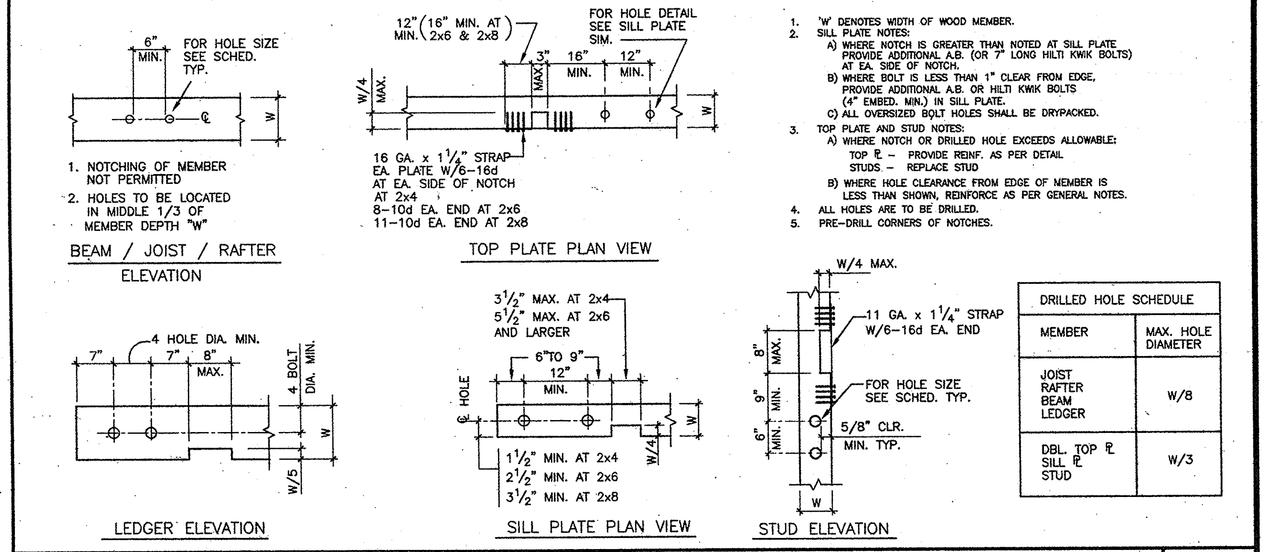

1. 'W' DENOTES WIDTH OF WOOD MEMBER.
2. SILL PLATE NOTES:
   A) WHERE NOTCH IS GREATER THAN NOTED AT SILL PLATE PROVIDE ADDITIONAL A.B. (OR 7" LONG HILTI KWIK BOLTS) AT EA. SIDE OF NOTCH.
   B) WHERE BOLT IS LESS THAN 1" CLEAR FROM EDGE, PROVIDE ADDITIONAL A.B. OR HILTI KWIK BOLTS (4" EMBED. MIN.) IN SILL PLATE.
   C) ALL OVERSIZED BOLT HOLES SHALL BE DRYPACKED.
3. TOP PLATE AND STUD NOTES:
   A) WHERE NOTCH OR DRILLED HOLE EXCEEDS ALLOWABLE:
      TOP ℄ – PROVIDE REINF. AS PER DETAIL
      STUDS – REPLACE STUD
   B) WHERE HOLE CLEARANCE FROM EDGE OF MEMBER IS LESS THAN SHOWN, REINFORCE AS PER GENERAL NOTES.
4. ALL HOLES ARE TO BE DRILLED.
5. PRE-DRILL CORNERS OF NOTCHES.

DRILLED HOLE SCHEDULE	
MEMBER	MAX. HOLE DIAMETER
JOIST RAFTER BEAM LEDGER	W/8
DBL. TOP ℄ SILL ℄ STUD	W/3

TYPICAL WOOD FRAMING HOLES AND NOTCHES — 7

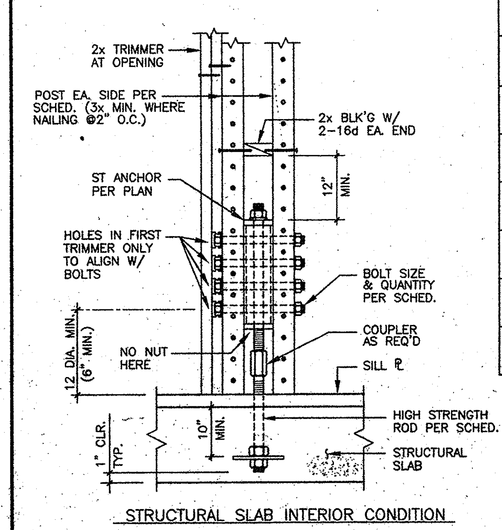

ZONE 4 SANDWICH TIE (ST) HOLDOWN SCHEDULE								
HOLD DOWN	ZONE 4 PRODUCT	MAX. STUD HT. (FT.)	MIN. POST SIZE EA. SIDE 2x4 STUD WALL	2x6 STUD WALL	POST BOLTS	ANCHOR BOLT (A193 B-7 RODS) SIZE	℄ WASHER	EMBEDMENT 'L'
ST-1	T2-24-6	8'	2x4	2x6	2-1/2"ø	3/4"ø	4"x4"x3/8"	8"
		10'	3x4	2x6				
ST-2	T2-44-6	8'	3x4	2x6	4-1/2"ø	3/4"ø	4"x4"x1/2"	8"
		12'	4x6	3x6				
ST-3	T2-64-6	8'	4x6	3x6	6-1/2"ø	3/4"ø	4"x4"x1/2"	12"
		10'	4x8	3x6				
ST-4	T2-84-6	8'	4x6	4x6	8-1/2"ø	3/4"ø	4"x4"x5/8"	12"
		10'	–	4x6				
ST-5	T2-65-7	8'	–	4x6	6-5/8"ø	7/8"ø	4"x4"x5/8"	12"
		12'	–	4x6				
ST-6	T2-66-9	8'	–	4x6	6-3/4"ø	1 1/8"ø	4"x4"x5/8"	15"

ST MODEL LEGEND:
T2-XY-Z
X = QUANTITY OF BOLTS
Y = BOLT SIZE, 1/8" INCREMENTS
Z = THREADED ROD SIZE, 1/8" INCREMENTS

NOTES:

1. INSPECTION REQUIRED FOR ANCHOR BOLT PLACEMENT PRIOR TO POURING CONCRETE.
2. FOR ST DETAIL SEE 5/-
3. AT 2x6 WALLS, MIN. POST SIZES SHALL BE 2x6, 3x6 AND 4x6 RESPECTIVELY.

HOLDOWN ANCHOR DETAIL AT STRUCTURAL SLAB — 8

VAN TILBURG, BANVARD & SODERBERGH, AIA
ARCHITECTURE · PLANNING · INTERIORS
PENTHOUSE, 225 ARIZONA AVENUE, SANTA MONICA, CA. 90401 TEL 310.394.0278 FAX 310.394.2424
SUITE 170, 1860 BLAKE STREET, DENVER, CO. 80202 TEL 303.575.0041 FAX 303.575.0052

PLAYA DEL REY
8700 PERSHING DRIVE
PLAYA VISTA, CALIFORNIA 90293

ARCHSTONE-COMMUNITIES TRUST
8801 Wall Street, Suite 800
Austin, Texas 78754

BRIAN L. COCHRAN ASSOCIATES, INC.
CONSULTING STRUCTURAL ENGINEERS
2040 ARMACOST AVE. LOS ANGELES CA. 90025
(310) 207-6638 FAX (310) 207-6188

ISSUE	DATE	DESCRIPTION
	08.18.00	PROGRESS & REVIEW SET
	09.08.00	DESIGN DEVELOPMENT SET
	10.17.00	50% C.D.
	11.10.00	BLDG. DEPARTMENT SUBMITTAL
	05.08.01	PLAN CHECK RESUBMITTAL
A	10.05.01	GMAX SET

PROJECT: 9985
DRAWN: M.V. CHECKED: B.B.

TYPICAL DETAILS

S-1.4

30x42 3/4"=1'-0" 00154S14 05-21-01