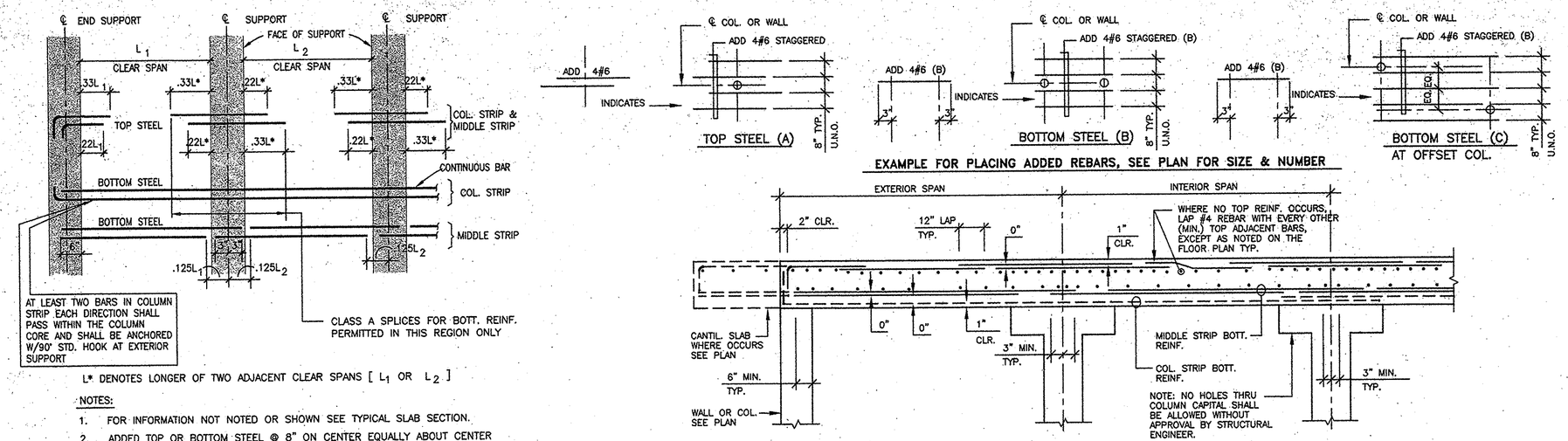

L* DENOTES LONGER OF TWO ADJACENT CLEAR SPANS [L_1 OR L_2]

NOTES:

1. FOR INFORMATION NOT NOTED OR SHOWN SEE TYPICAL SLAB SECTION.
2. ADDED TOP OR BOTTOM STEEL @ 8" ON CENTER EQUALLY ABOUT CENTER LINE AND NO CLOSER THAN 4" TO ANY ADJACENT REINFORCING.

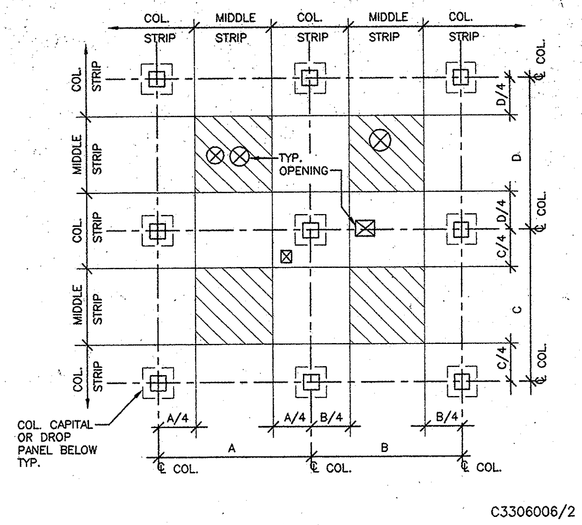

C3306006/2

TYP. SLAB REINFORCING NOTES:

1. UNLESS SHOWN OR NOTED OTHERWISE REINF. PLACING SEQUENCE IS AS FOLLOWS:
   A. PLACE BOTTOM STEEL IN E-W. DIRECTION.
   B. PLACE BOTTOM STEEL IN N-S DIRECTION.
   C. PLACE TOP STEEL IN N-S DIRECTION.
   D. PLACE TOP STEEL IN E-W DIRECTION.
2. UNLESS NOTED OTHERWISE, ALL BOTTOM STEEL SHALL BE CENTERED IN SPAN, ALL TOP STEEL SHALL BE CENTERED OVER THE SUPPORTS.
3. "B" DENOTES BOTTOM REINFORCING AS NOTED ON PLANS. ALL OTHER REINFORCING IS TOP STEEL.
4. BOTTOM STEEL SPACING SHALL NOT EXCEED TWO TIMES SLAB THICKNESS.

TYP. OPENING IN SLAB NOTES:

1. SEE MECHANICAL AND PLUMBING DRAWINGS FOR OPENING SIZE AND LOCATION.
2. OPENINGS IN NON-SHADED AREAS ARE LIMITED IN SIZE AS FOLLOWS:
   A. IN THE AREA COMMON TO TWO COLUMN STRIPS, NOT MORE THAN 1/8 OF THE WIDTH OF STRIP IN EITHER SPAN SHALL BE INTERRUPTED BY THE OPENINGS. EQUIVALENT OF REINFORCEMENT INTERRUPTED SHALL BE ADDED ON ALL SIDES OF THE OPENING, FOR DETAIL SEE 3/S-1.3
   B. IN THE AREA COMMON TO ONE COLUMN STRIP AND MIDDLE STRIP, NOT MORE THAN 1/4 OF THE REINFORCEMENT IN EITHER STRIP SHALL BE INTERRUPTED BY THE OPENING. THE EQUIVALENT OF REINFORCEMENT INTERRUPTED SHALL BE ADDED ON ALL SIDES OF THE OPENING.
   C. MAXIMUM OPENING SIZE IS 2'-0"x2'-0" OR 2'-0" DIAMETER U.N.O.
3. MAXIMUM OPENING SIZE IN SHADED AREAS SHALL BE 4'-0"x4'-0" OR 4'-0" DIA.
4. FOR LARGER OPENINGS CONTACT STRUCTURAL ENGINEER.
5. NO OPENING ALLOWED IN COLUMN CAPITALS OR DROP PANELS EXCEPT WHERE SPECIFICALLY DETAILED.

SLAB REINFORCING LENGTH, SLAB SECTION, OPENING IN SLAB AND CONCRETE SLAB NOTES — 1

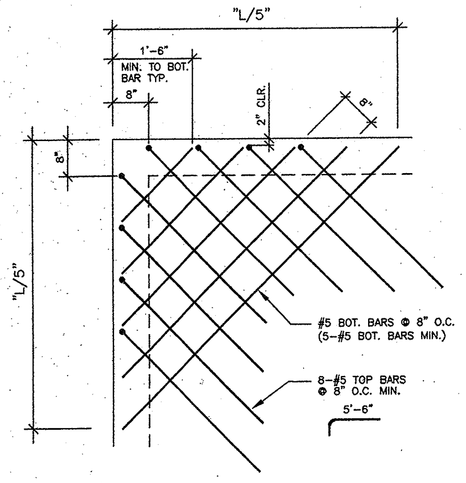

"L"= LONGER SLAB SPAN OF THE TWO SLAB DIRECTIONS.

ADD'L REINF. AT SLAB CORNERS — 2

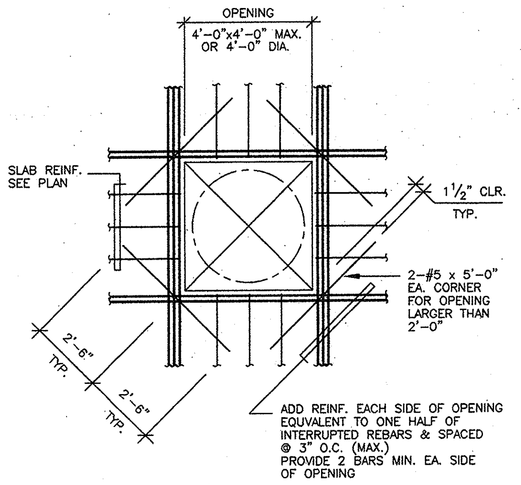

C3306001

TYP. STRUCT. CONC. SLAB OPENING — 3

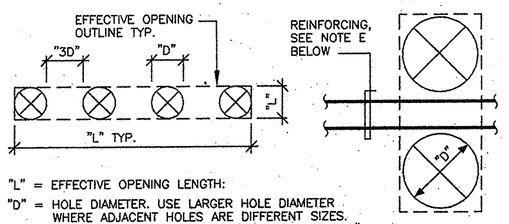

"L" = EFFECTIVE OPENING LENGTH:

"D" = HOLE DIAMETER. USE LARGER HOLE DIAMETER WHERE ADJACENT HOLES ARE DIFFERENT SIZES. IF EITHER OR BOTH HOLES ARE LARGER THAN 8" THEN THE SMALLER HOLE DIAMETER OF THE TWO HOLES SHALL BE USED.

GROUPED OPENING REINFORCING AND SPACING NOTES:

WHERE CLEAR DISTANCE BETWEEN ADJACENT HOLES ARE LESS THAN 3D (4" MIN.) THEN PROVIDE REINFORCING AS FOLLOWS:

A) REINFORCE AS A SINGLE OPENING USING "EFFECTIVE OPENING OUTLINES" SHOWN IN DETAIL ABOVE AS A GUIDELINE FOR DETERMINING OPENING SIZES.
B) PROVIDE 1 – #5 TOP AND BOTTOM TRIM BARS AROUND "EFFECTIVE OPENING" WITH 1'-0" EMBEDMENT PAST THE OPENING EDGE.
C) WHERE "L" EXCEEDS 24 INCHES PROVIDE DIAGONAL CORNER BARS AND REINFORCE AS PER TYP. STRUCT. CONC. SLAB OPENING DETAIL.
D) IF EFFECTIVE OPENING LENGTH EXCEEDS 48 INCHES CONTACT THE STRUCTURAL ENGINEER PRIOR TO PROCEEDING.
E) CONTINUE TYPICAL REINFORCING BETWEEN INDIVIDUAL HOLES WHERE POSSIBLE. AN EQUIVALENT AMOUNT OF ANY INTERRUPTED REINFORCING SHALL BE ADDED AT EACH SIDE OF GROUPED OPENING.

TYPICAL GROUPED OPENING DETAIL IN CONCRETE SLABS — 4

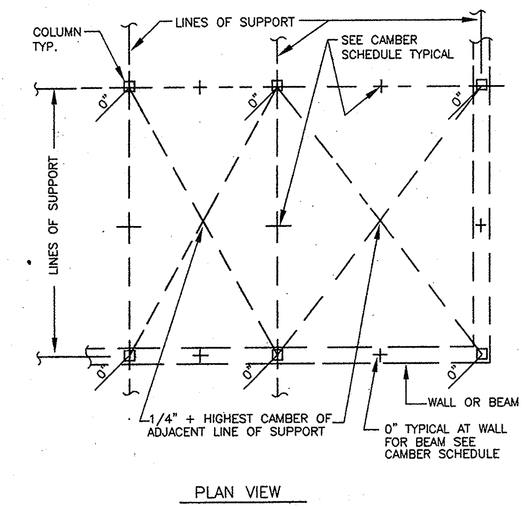

TYP. TWO WAY SLAB CAMBER — 5

MIN. CAMBER SCHEDULE U.N.O.		
SPAN	SLABS	BEAMS
0'-0" TO 10'-0"	0"	0"
10'-0" TO 15'-0"	3/8"	1/4"
15'-0" TO 20'-0"	1/2"	3/8"
20'-0" TO 25'-0"	5/8"	1/2"
25'-0" TO 30'-0"	3/4"	5/8"
30'-0" TO 35'-0"	1"	3/4"

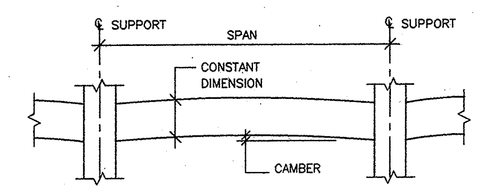

NOTE: WHEN ADJACENT SPAN IS 20 % OR MORE LARGER THAN THE SPAN UNDER CONSIDERATION THE CAMBER SHALL BE REDUCED PROPORTIONATELY.

TYP. SLAB & BEAM CAMBER DETAIL — 6

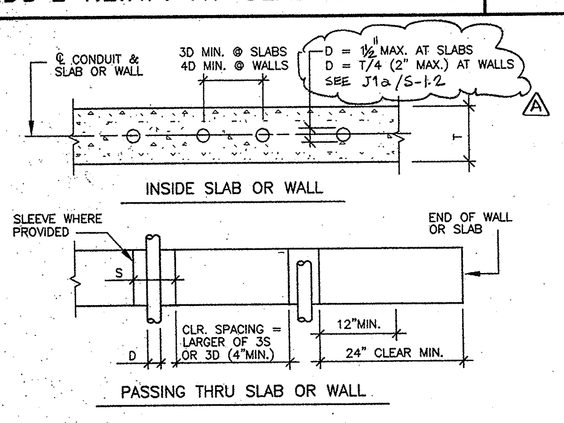

NOTES: 1. D = CONDUIT OR PIPE DIAMETER S = SLEEVE DIAMETER
2. SEE GENERAL NOTES FOR CONDUIT REQUIREMENTS
3. WHERE PIPE OR SLEEVE PASSING THRU WALL OR SLAB SPACING IS LESS THAN SHOWN, REINFORCE AS A SINGLE OPENING.
FOR WALLS SEE TYP. WALL OPENING DETAIL.
FOR SLABS SEE TYP. GROUPED OPENING DETAIL.
IF EFFECTIVE OPENING DIMENSION EXCEEDS 24" (48" FOR SLABS) CONTACT STRUCTURAL ENGINEER BEFORE PROCEEDING

C3306009/1

TYP. CONDUIT AND PIPING DETAIL — 7

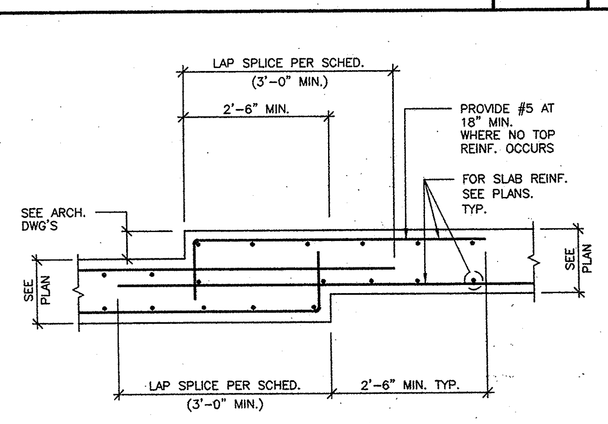

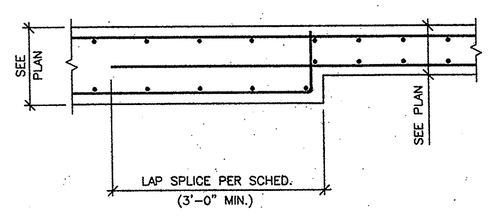

TYP. SLAB DEPRESSION AND CHANGE IN SLAB THICKNESS — 8

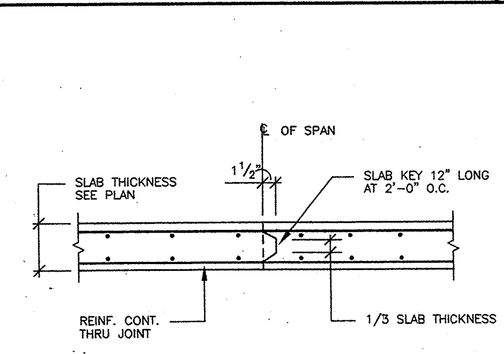

NOTE:

CONTRACTOR TO SUBMIT DRAWINGS SHOWING LOCATION OF CONSTRUCTION JOINTS TO STRUCTURAL ENGINEER FOR APPROVAL.

SLAB CONSTRUCTION JOINT DETAIL — 9

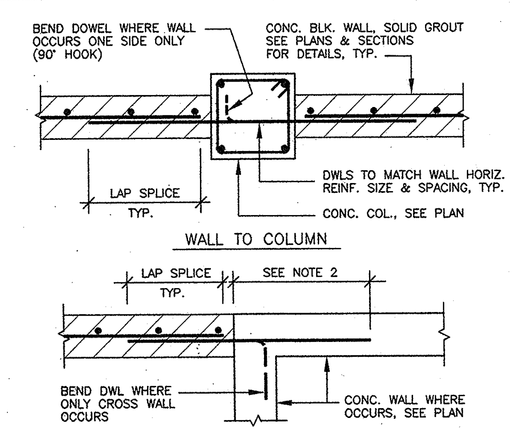

NOTES:

1. LAP SPLICE IN MASONRY WALL TO BE AS PER SCHEDULE IN TYP. MASONRY WALL DETAIL.
2. DOWEL EMBEDMENT IN CONCRETE WALL SHALL BE AS PER MIN. LAP SPLICE & EMBEDMENT DETAIL.

TYP. MASONRY WALL HORIZONTAL DOWELS TO CONCRETE — 10

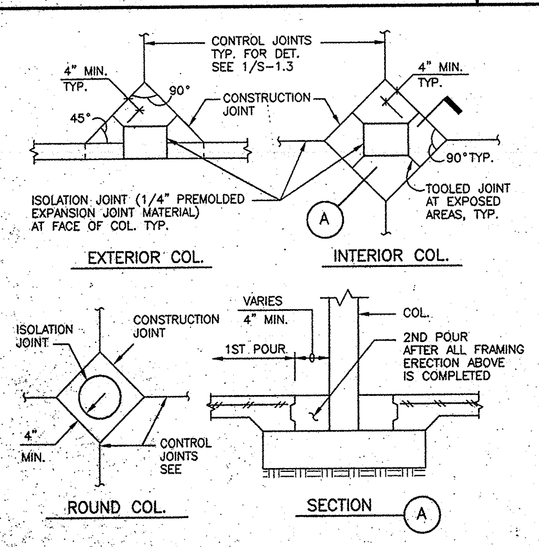

TYP. CONC. COL. CONTROL JOINT — 11

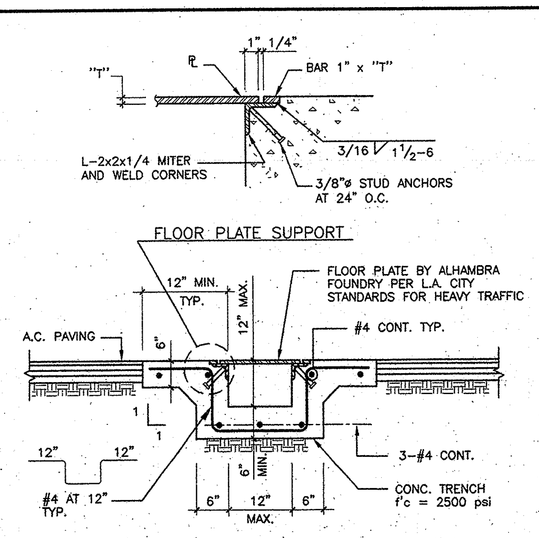

C3307017

TRENCH DRAIN DETAIL — 12

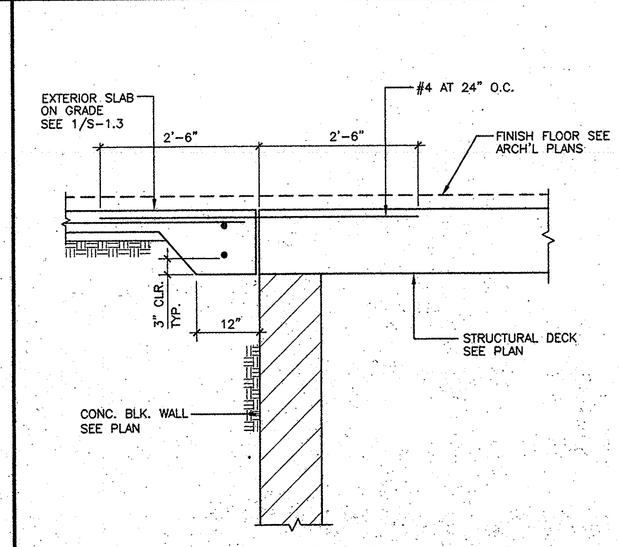

TYP. EXTERIOR SLAB CONN. TO STRUCTURE — 13

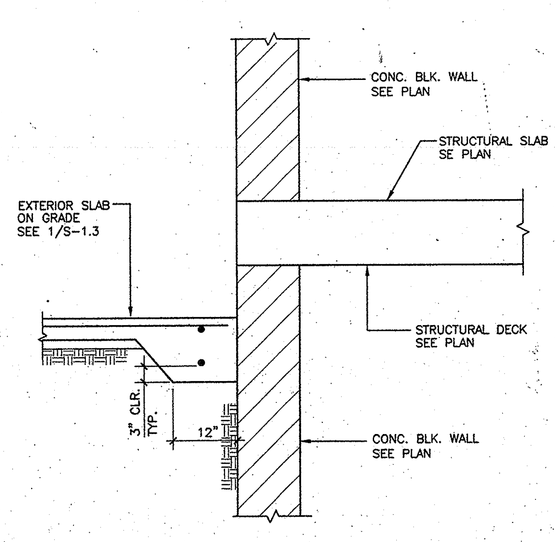

TYP. EXTERIOR SLAB CONN. TO STRUCTURE — 14

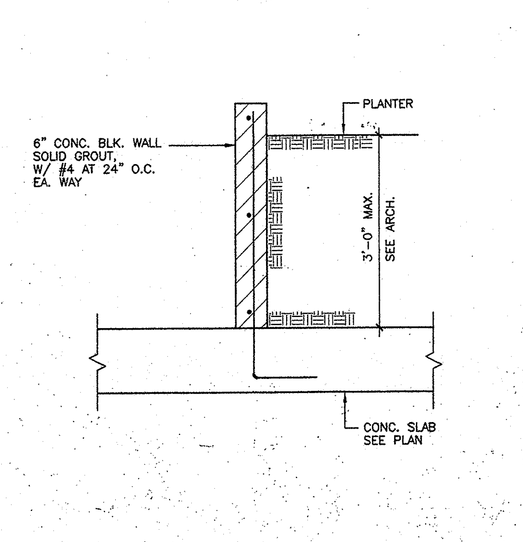

TYP. PLANTER WALL SECTION — 15

VAN TILBURG, BANVARD & SODERBERGH, AIA
ARCHITECTURE · PLANNING · INTERIORS
PENTHOUSE, 225 ARIZONA AVENUE SANTA MONICA, CA. 90401 TEL 310.394.0273 FAX 310.394.2424
SUITE 170, 1860 BLAKE STREET DENVER, CO. 80202 TEL 303.675.0041 FAX 303.675.0052

PLAYA DEL REY
8700 PERSHING DRIVE
PLAYA VISTA, CALIFORNIA 90293

ARCHSTONE COMMUNITIES TRUST
8801 Wall Street, Suite 800
Austin, Texas 78754

BRIAN L. COCHRAN ASSOCIATES, INC.
CONSULTING STRUCTURAL ENGINEERS
2040 ARMACOST AVE. LOS ANGELES CA. 90025
(310) 207-6638 FAX (310) 207-6188

ISSUE	DATE	DESCRIPTION
	08.18.00	PROGRESS & REVIEW SET
	09.06.00	DESIGN DEVELOPMENT SET
	10.17.00	50% C.D.
	11.10.00	BLDG. DEPARTMENT SUBMITTAL
	05.08.01	PLAN CHECK RESUBMITTAL
	06.28.01	BID SET
A	10.05.01	GMAX SET

PROJECT: 9985
DRAWN: M.V. CHECKED: B.B.

TYPICAL DETAILS

S-1.6