21

17

13

9

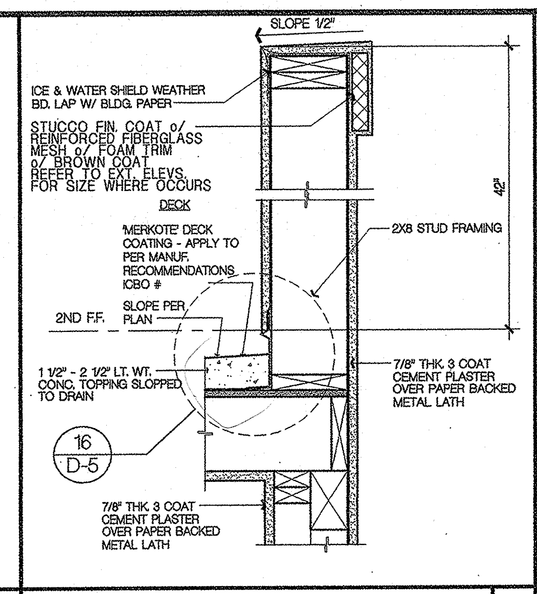

DECK WALL 5

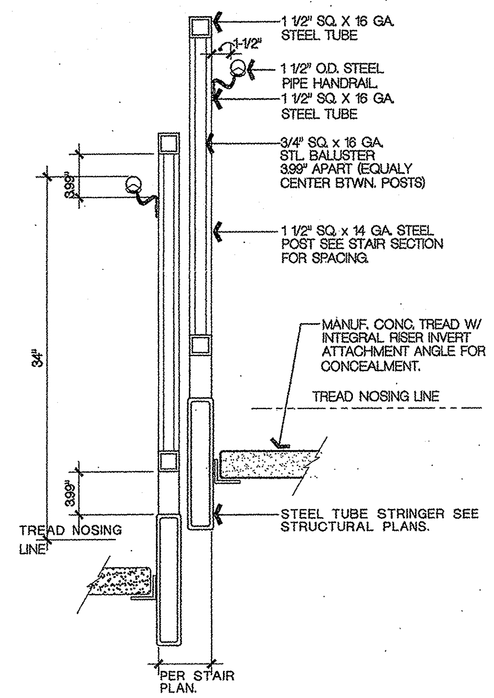

NOTE: GRIND SMOOTH ALL WELDS PRIME & PAINT ALL STEEL COMPONENTS. ALL FIELD WELDS TO BE GROUND SMOOTH PRIMED & PAINTED.

GUARDRAIL SECTION 2

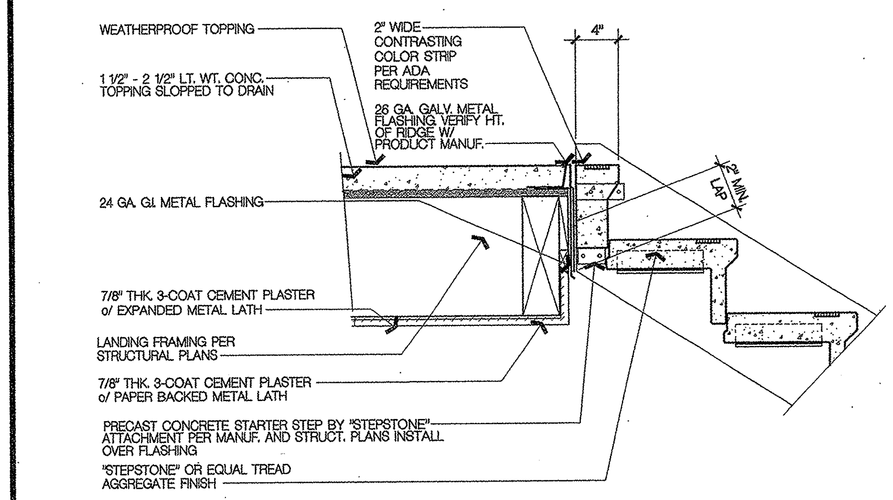

STRINGER TO LANDING 18

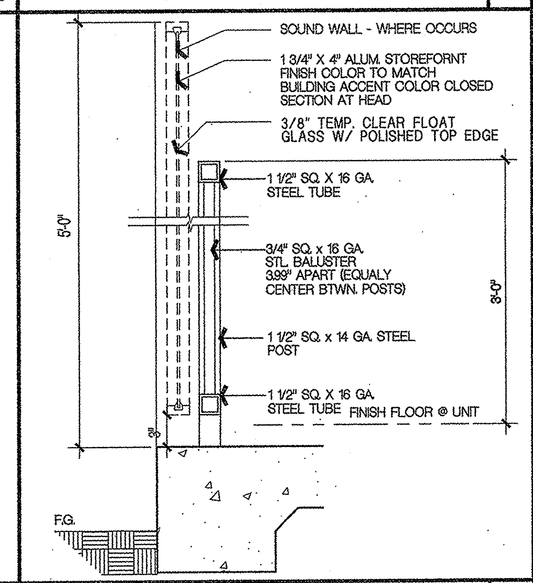

FENCE AT PATIO 10

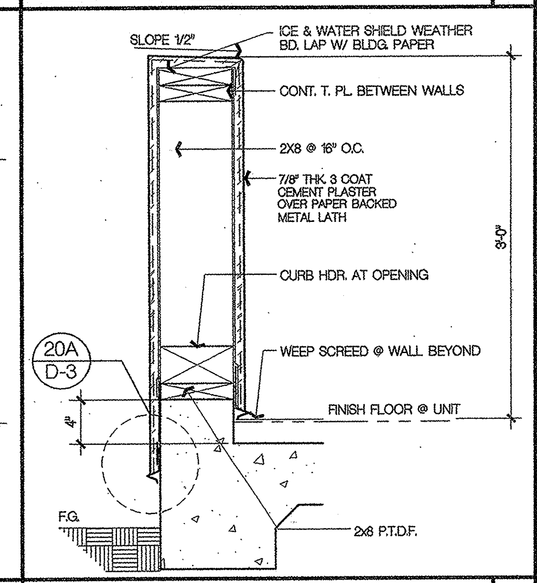

PATIO WALL 6

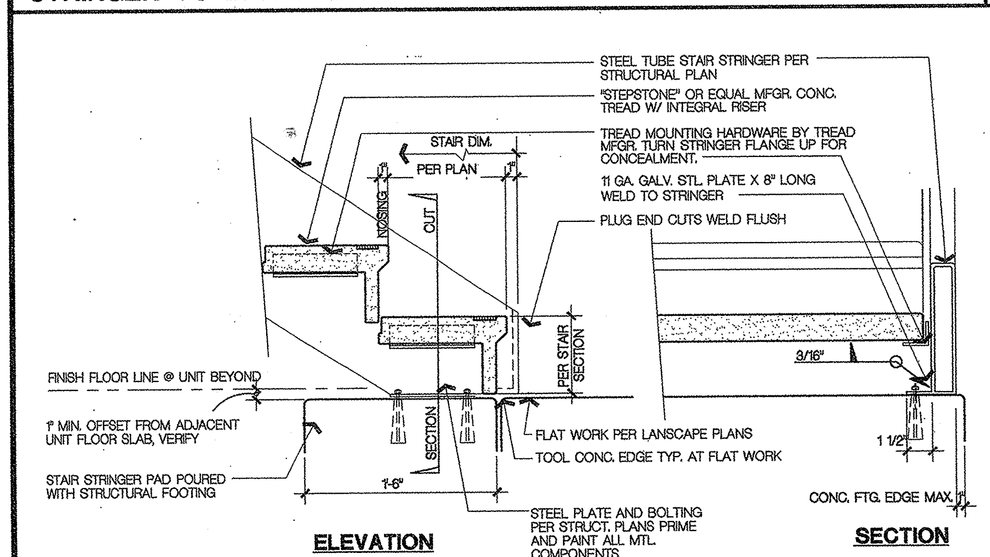

STRINGER TO GRADE 19

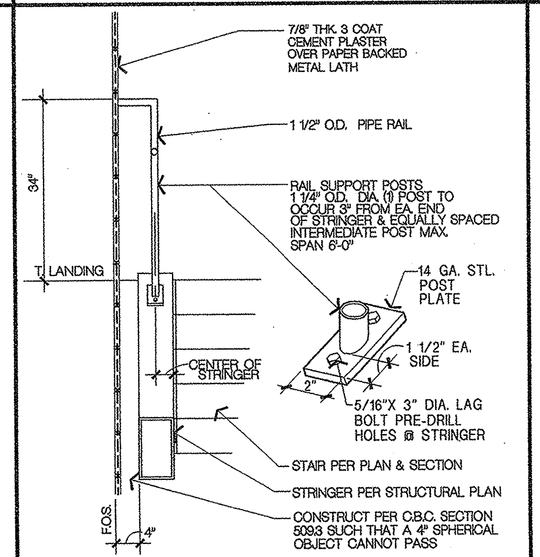

STRINGER TO WALL 15

11

TYPICAL SIDE ELEVATION

NOTE
METALIZE PRIME AND PAINT ALL METAL COMPONENTS

STAIR RAIL 4

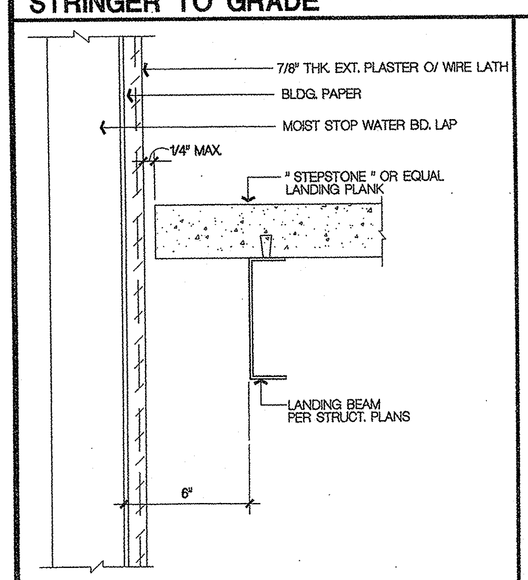

LANDING TO WALL 24

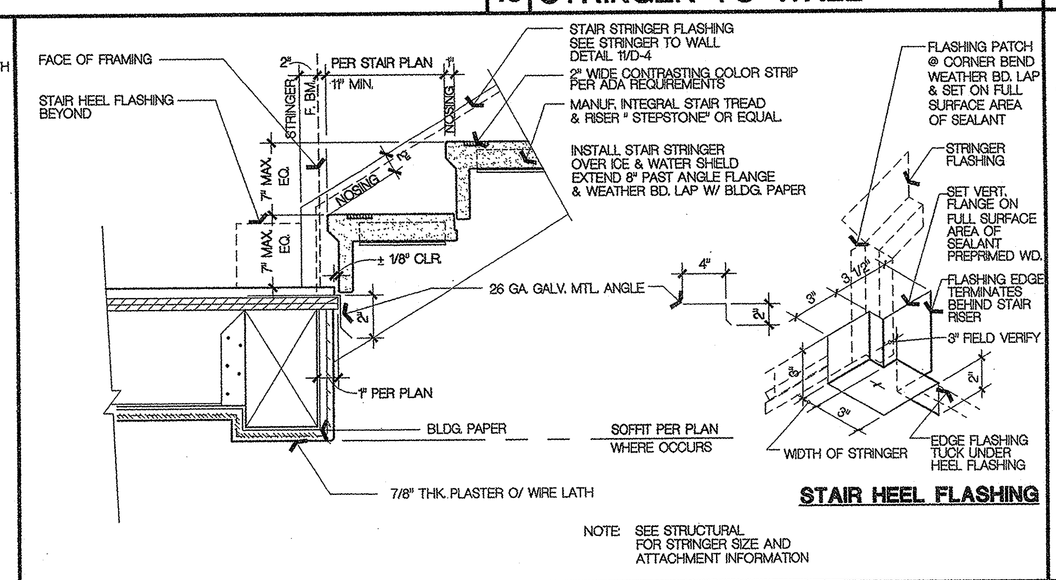

STAIR HEEL FLASHING

NOTE: SEE STRUCTURAL FOR STRINGER SIZE AND ATTACHMENT INFORMATION

STRINGER DOWN TO LANDING 16

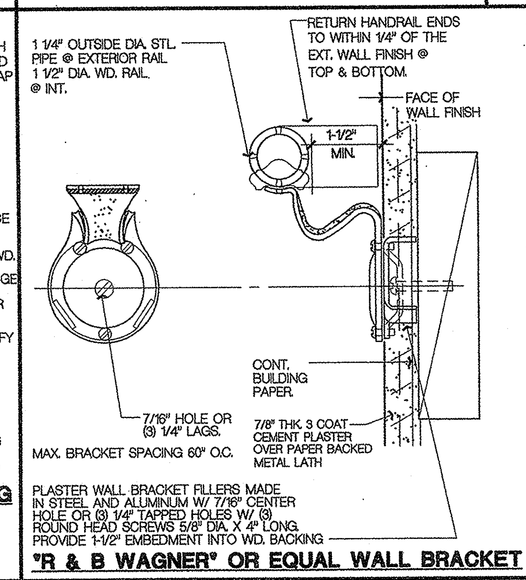

"R & B WAGNER" OR EQUAL WALL BRACKET

EXTERIOR HANDRAIL 12

No.	Date	Issue / Description
	11.07.2002	OWNER REVIEW

IT IS THE CLIENTS RESPONSIBILITY PRIOR TO OR DURING CONSTRUCTION TO NOTIFY THE ARCHITECT IN WRITING OF ANY REQUIRED CHANGES OR OMISSIONS IN THE PLANS AND SPECIFICATIONS OF WHICH A CONTRACTOR THOROUGHLY KNOWLEDGEABLE WITH THE BUILDING CODES AND METHODS OF CONSTRUCTION SHOULD REASONABLY BE AWARE. WRITTEN INSTRUCTIONS ADDRESSING SUCH PERCEIVED ERRORS OR OMISSIONS SHALL BE RECEIVED FROM THE ARCHITECT PRIOR TO THE ACTUAL CONSTRUCTION OF THE ITEM INVOLVED. THE ARCHITECT WILL NOT BE RESPONSIBLE FOR ANY DEFECTS IN CONSTRUCTION IF THESE PROCEDURES ARE NOT FOLLOWED.

Consultant:

Project:

UCI - EAST CAMPUS STUDENT APTS. PHASE 1
IRVINE CALIFORNIA

2001077

KTGY GROUP, INC.
Architecture Planning

17992 MITCHELL SOUTH
IRVINE, CA 92614

(949) 851-2133
(949) 851-5156 FAX

License Stamp:

CONTRACT SET

Principal in Charge: D. McALLISTER
Project Director: D. McALLISTER
Project Manager: W. WONG
Project Designer: D. TAITANO
Checked By:

Sheet Title:
ARCHITECTURAL DETAILS

Sheet No.:
D-4

CADFILE:
PLOT DATE:

COPYRIGHT ©