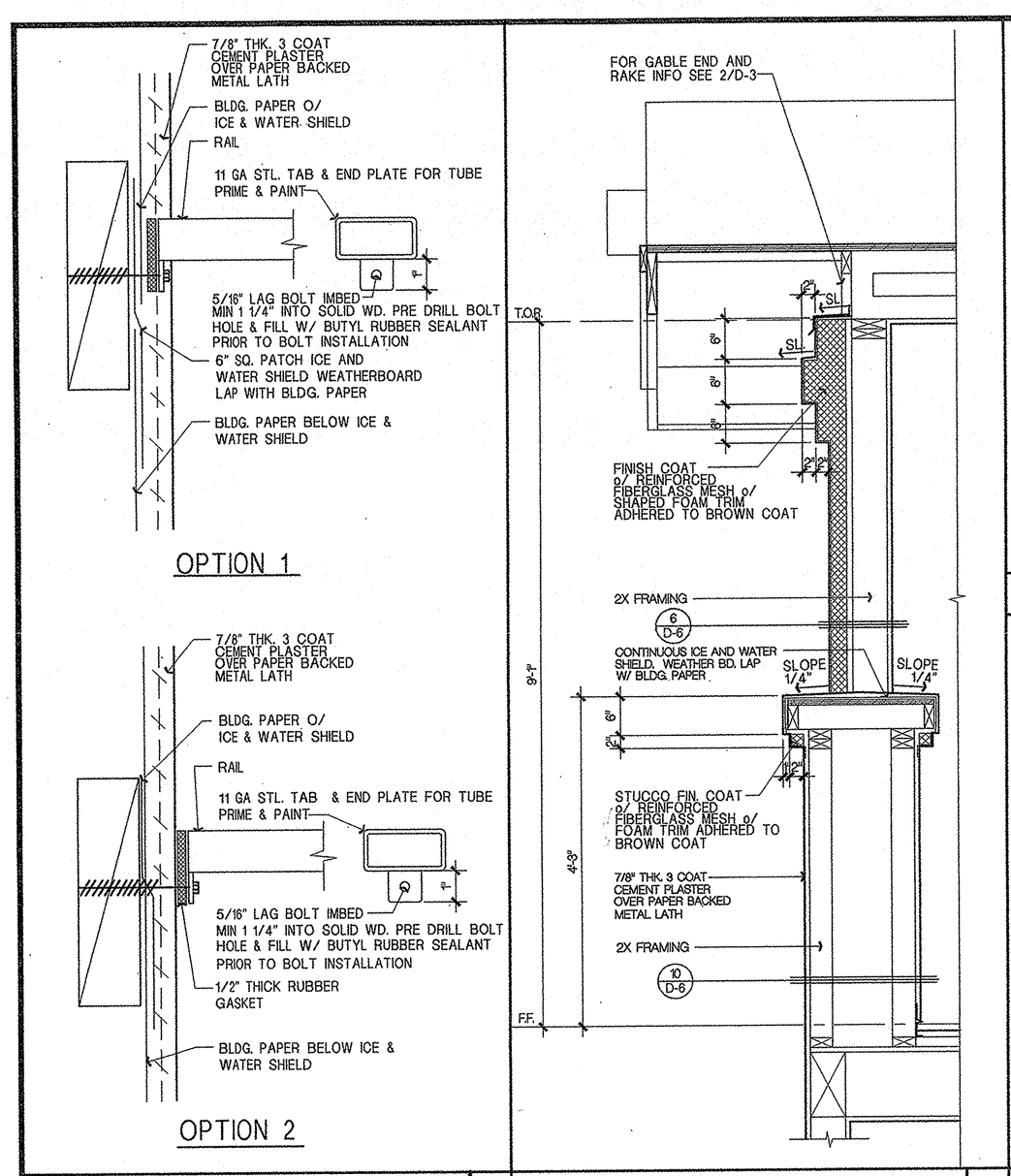

RAIL TO WALL ATTACHMENT | 22

COLUMN SECTION @ DECK | 18

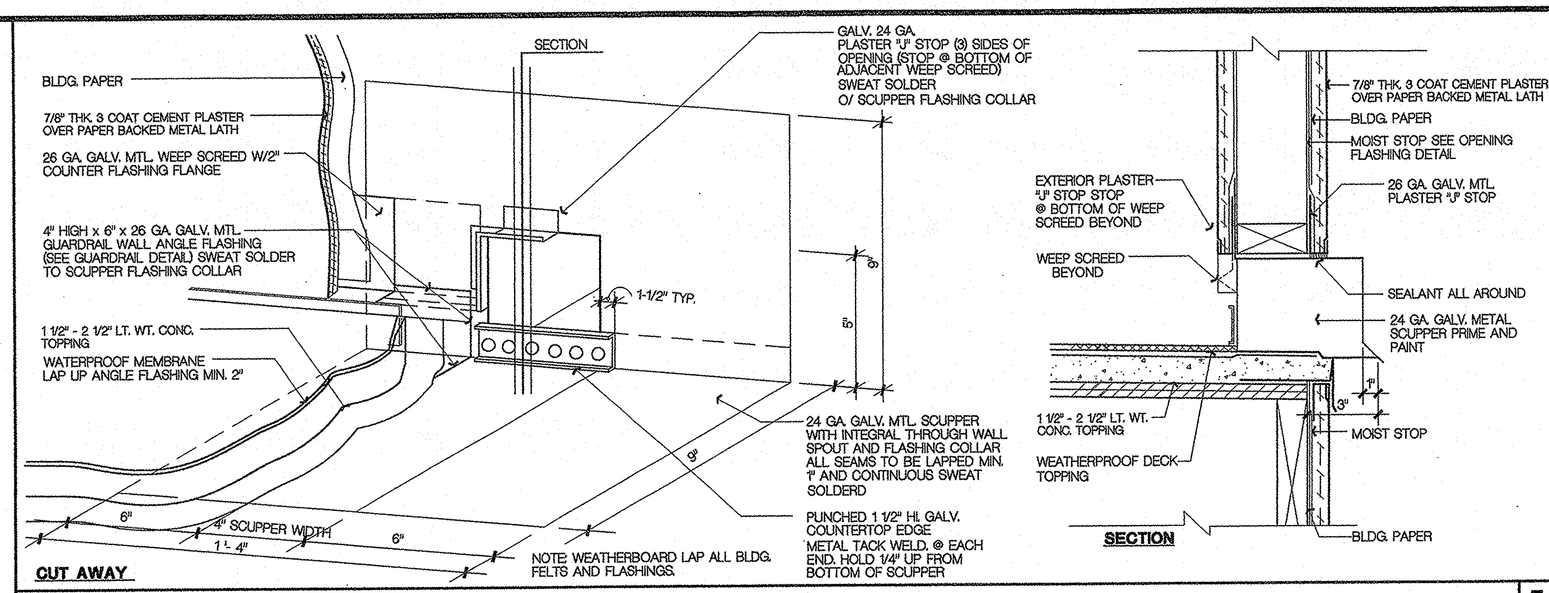

SCUPPER DETAIL | 5

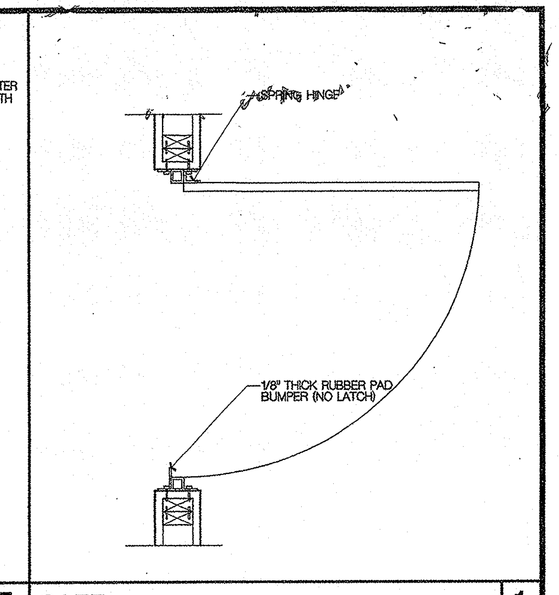

GATE | 1

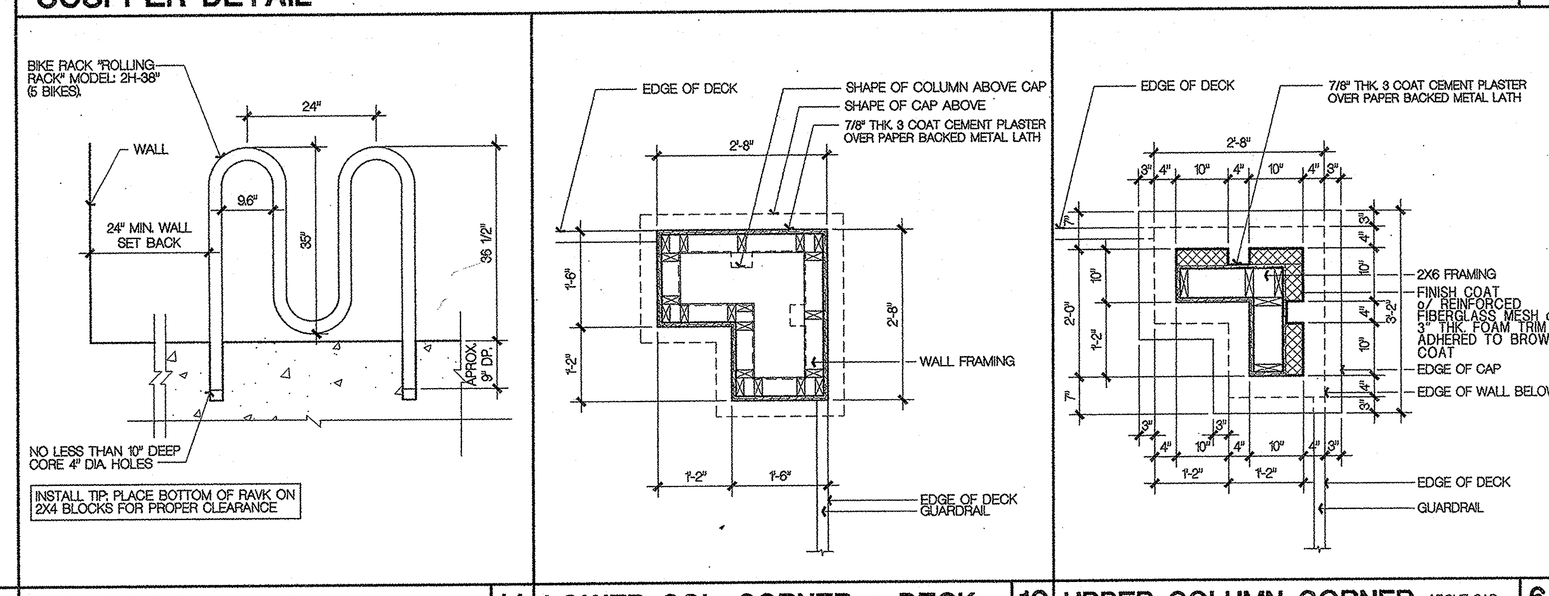

BIKE RACK | 14

LOWER COL. CORNER @ DECK | 10

UPPER COLUMN CORNER ABOVE CAP | 6

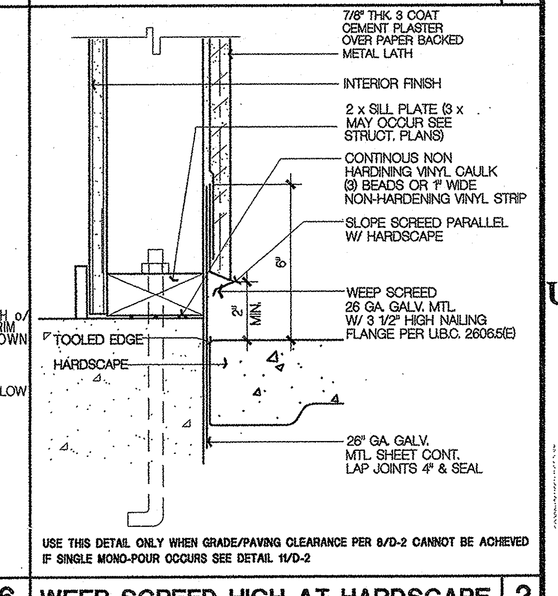

WEEP SCREED HIGH AT HARDSCAPE | 2

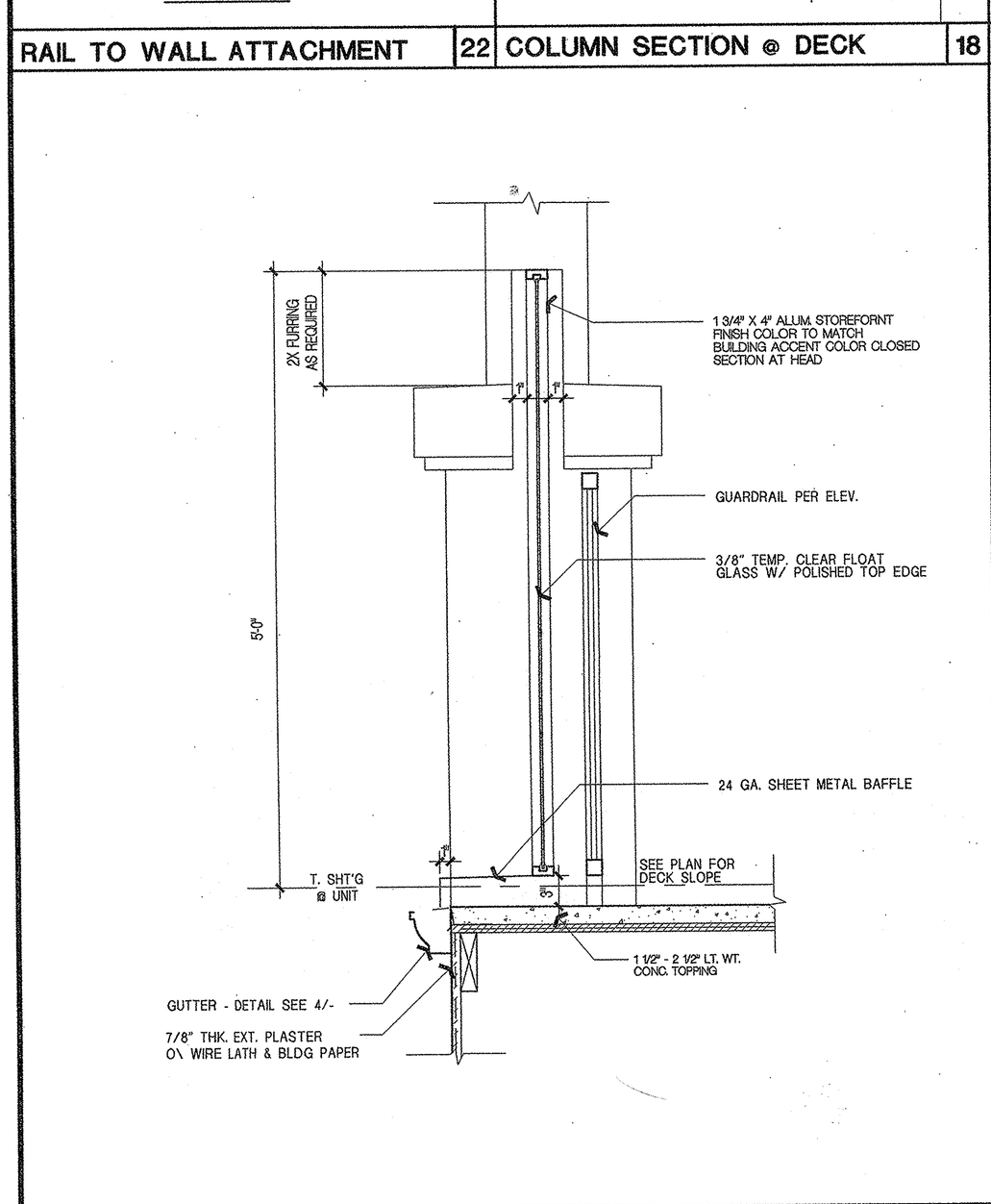

ACOUSTICAL SCREEN | 20

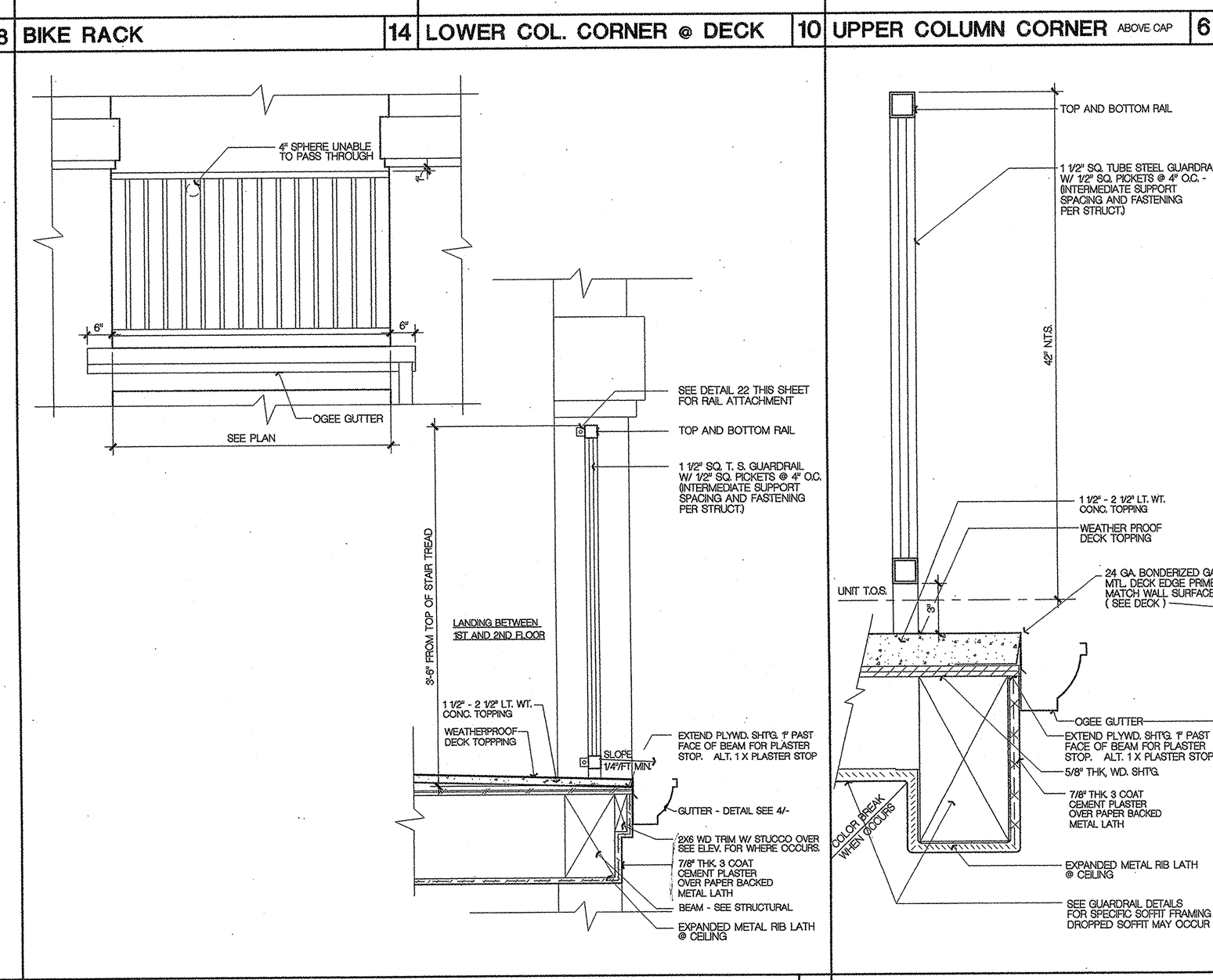

CRAFTSMAN STYLE BALCONY RAIL @ STAIR | 12

FENCE AT PATIO | 3

DECK EDGE | 4

CADFILE:
PLOT DATE:

COPYRIGHT ©

No.	Date	Issue / Description
	1107.2002	OWNER REVIEW

IT IS THE CLIENTS RESPONSIBILITY PRIOR TO OR DURING CONSTRUCTION TO NOTIFY THE ARCHITECT IN WRITING OF ANY PERCEIVED ERRORS OR OMISSIONS IN THE PLANS AND SPECIFICATIONS OF WHICH A CONTRACTOR PROVIDES ONLY KNOWLEDGEABLE WITHIN THE BUILDING CODES AND PRACTICES OF THE CONSTRUCTION INDUSTRY. ALL CONTRACTORS MUST NOTIFY THE ARCHITECT OF ANY PERCEIVED ERRORS OR OMISSIONS BEFORE BID. IF NOTIFIED FROM THE ARCHITECT PRIOR TO THE CLIENT OR CLIENTS SUBCONTRACTORS PROCEEDING WITH THE WORK, THE CLIENT WILL BE RESPONSIBLE FOR ANY EXPECTS IN CONSTRUCTION IF THESE PROCEDURES ARE NOT FOLLOWED.

Consultant:

Project:

UCI - EAST CAMPUS STUDENT APTS. PHASE 1

IRVINE
CALIFORNIA

2001077

KTGYGROUP, INC.
Architecture Planning

17992 MITCHELL SOUTH
IRVINE, CA 92614

(949) 851-2133
(949) 851-5156 FAX

License Stamp:

CONTRACT SET

Principal in Charge: D. McALLISTER
Project Director: D. McALLISTER
Project Manager: W. WONG
Project Designer: D. TAITANO
Checked By:

Sheet Title:
ARCHITECTURAL DETAILS

Sheet No.:
D-6