INTERIOR FINISH SCHEDULE REMARKS

1A. WHERE SHEET VINYL IS SCHEDULED:
PROVIDE CUSHIONED SHEET VINYL AT DWELLING UNITS THAT STACK ATOP UNITS OF DIFFERENT TENANCY, AS REQUIRED TO MAINTAIN I.I.C. AND S.T.C. FLOOR/CEILING ASSEMBLY RATING. SEE FLOOR/CEILING ASSEMBLY DETAIL 6 /D-1

1B. WHERE CARPET IS SCHEDULED:
PROVIDE CARPET O/PAD AT DWELLING UNITS THAT STACK ATOP UNITS OF DIFFERENT TENANCY, AS REQUIRED TO MAINTAIN I.I.C. AND S.T.C. FLOOR/CEILING ASSEMBLY RATING. SEE FLOOR/CEILING ASSEMBLY DETAIL 6 /D-1

2. FINISH FLOORING AT KITCHENS TO RUN CONTINUOUS TO WALL AND BETWEEN CABINETS IN OVEN/RANGE AND REFRIGERATOR ALCOVES.

3. LIGHT KNOCK DOWN TEXTURE, SEAL WITH PVA SEALER AND COLOR COAT WITH FLAT LATEX PAINT (2) COATS OR AS REQUIRED FOR HOMOGENEOUS COLOR.

4. LIGHT KNOCK DOWN TEXTURE, SEAL WITH PVA SEALER AND COLOR COAT WITH SEMI-GLOSS LATEX PAINT (2) COATS OR AS REQUIRED FOR HOMOGENEOUS COLOR.

5. PROVIDE PVA SEALER OVER TAPED AND BOX COATED JOINTS AND NALS AT WALLS AND CEILINGS.

NOTE:

- MOISTURE RESISTANT GYPSUM BOARD WILL NOT OCCUR ON CEILINGS PER U.B.C. SEC. 2512 WHEN FRAMING EXCEEDS 12" O.C. MOISTURE RESISTANT GYPSUM BOARD WILL OCCUR AT WALLS OF ROOMS WHERE TUB/SHOWERS OCCUR. AS RECOMMENDED BY THE GYPSUM ASSOCIATION.
- INTERIOR BEARING WALLS WILL BE MINIMUM (1) LAYER 5/8" TYPE "X" (1) HR. GYPSUM BOARD.
- FLOOR CEILING AND ROOF CEILING ASSEMBLIES WILL BE AS REQUIRED FOR A (1) HR. BUILDING. SEE SHEET D-1.

DOOR TYPES

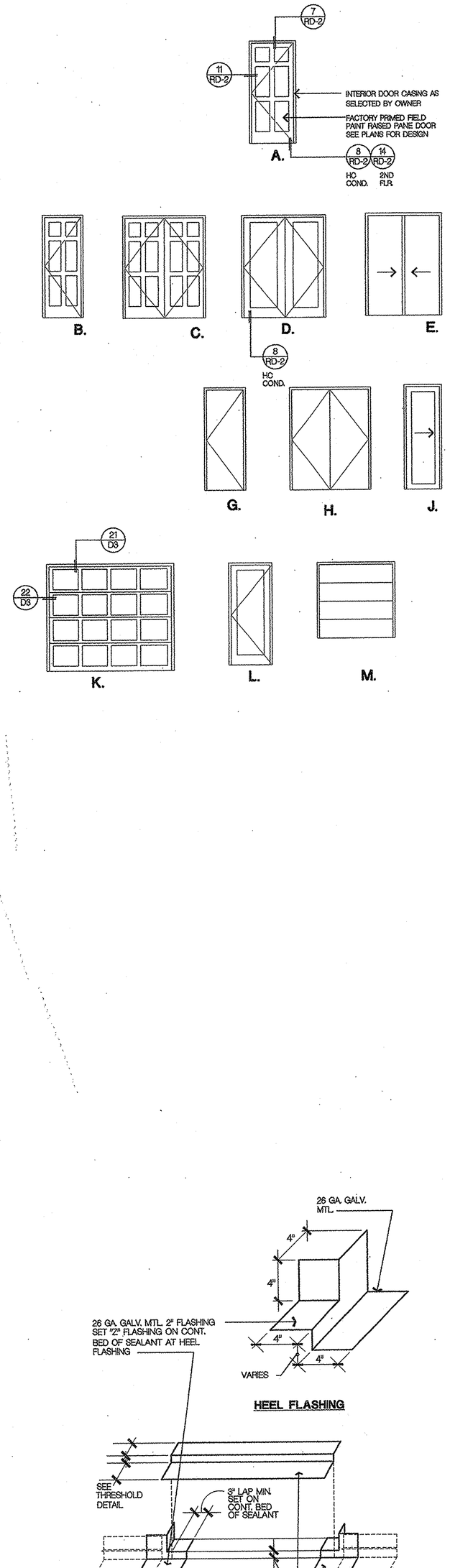

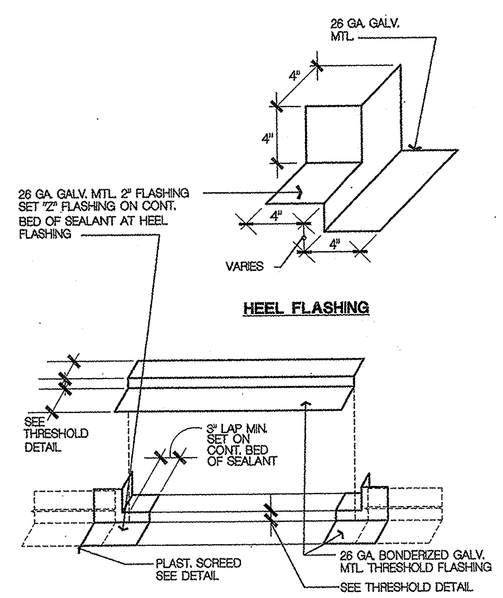

HEEL FLASHING

DOOR THRESHOLD FLASHING @ WOOD FLR. SHT'G

DOOR SCHEDULE

SYM.	SIZE	THK.	HANDING	DOOR MATERIAL	DOOR ELEVATION	DOOR TYPE	FRAME MATERIAL	HARDWARE GROUP	GLASS	REMARKS SEE NOTES BELOW
RECREATION BUILDING										
101	(2) 3080	1 3/4"	PAIR	HD ALUM. ENTRY	1 LITE ADA	D	ALUM.	1	TEMP.	
102	(2) 3080	1 3/4"	PAIR	HD ALUM. ENTRY	1 LITE ADA	D	ALUM.	1	TEMP.	
103	3080	1 3/4"	SINGLE	HD ALUM. ENTRY	1 LITE ADA	L	ALUM.	3	TEMP.	
104	3080	1 3/4"	SINGLE	HD ALUM. ENTRY	1 LITE ADA	L	ALUM.	3-1	TEMP.	
105	3080	1 3/4"	SINGLE	HD ALUM. ENTRY	1 LITE ADA	L	ALUM.	3-1	TEMP.	
106	3080	1 3/4"	SINGLE	HD ALUM. ENTRY	1 LITE ADA	L	ALUM.	3	TEMP.	
107	3080	1 3/4"	SINGLE	HD ALUM. ENTRY	1 LITE ADA	L	ALUM.	3-1	TEMP.	
108	3080	1 3/4"	SINGLE	HD ALUM. ENTRY	1 LITE ADA	L	ALUM.	7	TEMP.	
109	3080	1 3/4"	SINGLE	SC	6 PANEL	B	H.M.	8		
110	3080	1 3/4"	SINGLE	SC	6 PANEL	B	H.M.	8		
111	3080	1 3/4"	SINGLE	HD ALUM. ENTRY	1 LITE ADA	L	ALUM.	3-2	TEMP.	
112	3080	1 3/4"	SINGLE	SC	6 PANEL	B	TIMELY	2		
113	3080	1 3/4"	SINGLE	HC METAL	FLUSH	G	H.M.	2		
114	3080	1 3/4"	SINGLE	SC	6 PANEL	B	TIMELY	2		
115	3080	1 3/8"	SINGLE	SC	6 PANEL	B	TIMELY	2		
116	3080	1 3/4"	SINGLE	SC	6 PANEL	B	TIMELY	2		
117	3080	1 3/4"	SINGLE	SC	6 PANEL	B	TIMELY	2		
118	3080	1 3/4"	SINGLE	SC	6 PANEL	B	TIMELY	2		
119	3080	1 3/4"	SINGLE	SC	6 PANEL	B	TIMELY	2		
120	3080	1 3/4"	SINGLE	SC	6 PANEL	B	TIMELY	2		
121	(2) 2080	1 3/8"	PAIR	SC	6 PANEL	C	TIMELY	14		
122	3080	1 3/4"	SINGLE	HD ALUM. ENTRY	1 LITE ADA	L	ALUM.	4	TEMP.	
123	(2) 3080	1 3/4"	PAIR	HD ALUM. ENTRY	1 LITE ADA	D	ALUM.	1	TEMP.	
124	(2) 3080	1 3/4"	PAIR	HD ALUM. ENTRY	1 LITE ADA	D	ALUM.	1	TEMP.	
125	(2) 3080	1 3/4"	PAIR	HD ALUM. ENTRY	1 LITE ADA	D	ALUM.	1	TEMP.	
126	3080	1 3/4"	SINGLE	SC	6 PANEL	B	H.M.	5		
127	3080	1 3/4"	SINGLE	SC	6 PANEL	B	TIMELY	10		
128	3080	1 3/4"	SINGLE	SC	6 PANEL	B	H.M.	9		
129	3080	1 3/4"	SINGLE	HD ALUM. ENTRY	1 LITE ADA	L	ALUM.	3-1	TEMP.	
130	3080	1 3/4"	SINGLE	HD ALUM. ENTRY	1 LITE ADA	L	ALUM.	3-1	TEMP.	
131	(2) 3080	1 3/4"	PAIR	METAL	FLUSH	H	H.M.	6		
132	3080	1 3/4"	SINGLE	METAL	FLUSH	G	H.M.	5		
133	3080	1 3/4"	SINGLE	METAL	FLUSH	G	H.M.	5		
134	3080	1 3/4"	SINGLE	SC	6 PANEL	B	H.M.	8		
135	3080	1 3/4"	SINGLE	SC	6 PANEL	B	H.M.	8		
136	3080	1 3/4"	SINGLE	HC METAL	FLUSH	G	H.M.	5		
137	3080	1 3/4"	SINGLE	HC METAL	FLUSH	G	H.M.	5		
138	5050	--	ROLL-UP	METAL	SECTIONAL	M	--	--		ROLL-UP SECURITY DOOR ABOVE COUNTER
201	3080	1 3/4"	SINGLE	SC	6 PANEL	B	TIMELY	11		
202	3080	1 3/4"	SINGLE	SC	6 PANEL	B	TIMELY	11		
203	3080	1 3/4"	SINGLE	HD ALUM. ENTRY	1 LITE ADA	L	ALUM.	3-1	TEMP.	
205	3080	1 3/4"	SINGLE	HD ALUM. ENTRY	1 LITE ADA	L	ALUM.	3	TEMP.	
206	(2) 3080	1 3/4"	PAIR	SC	6 PANEL	C	TIMELY	12		
207	3080	1 3/4"	SINGLE	SC	6 PANEL	B	TIMELY	2		
208	3080	1 3/4"	SINGLE	SC	6 PANEL	B	TIMELY	2		
209	3080	1 3/4"	SINGLE	HD ALUM. ENTRY	1 LITE ADA	L	ALUM.	3-2	TEMP.	
210	3080	1 3/4"	SINGLE	SC 20 MIN	6 PANEL	B	TIMELY	13		
211	3080	1 3/4"	SINGLE	SC 20 MIN	6 PANEL	B	TIMELY	13		
212	3080	1 3/4"	SINGLE	SC 20 MIN	6 PANEL	B	TIMELY	13		
213	3080	1 3/4"	SINGLE	METAL 20 MIN	FR/1 LITE	L	TIMELY	3-1	TEMP.	
214	3080	1 3/4"	SINGLE	HD ALUM. ENTRY	1 LITE ADA	L	ALUM.	15	TEMP.	
GRADUATE COMMUNITY BUILDING										
G1	(2) 3080	1 3/4"	PAIR	HD ALUM. ENTRY	1 LITE ADA	D	ALUM.	4	TEMP.	
G2	(2) 3080	1 3/4"	PAIR	HD ALUM. ENTRY	1 LITE ADA	D	ALUM.	4	TEMP.	
G3	3080	1 3/4"	SINGLE	SC	6 PANEL	B	TIMELY	10		
G4	3080	1 3/4"	SINGLE	SC	6 PANEL	B	TIMELY	10		
G5	3080	1 3/4"	SINGLE	HC	6 PANEL	B	TIMELY	2		
G6	(2) 3080	1 3/4"	PAIR	SC	6 PANEL	C	H.M.	6		
G7	3080	1 3/4"	SINGLE	HC	6 PANEL	B	H.M.	2		
G8	3080	1 3/4"	SINGLE	HC	6 PANEL	B	H.M.	2		
G9	3080	1 3/4"	SINGLE	HC	6 PANEL	B	H.M.	2		
G10	3080	1 3/4"	SINGLE	SC	6 PANEL	B	H.M.	2		
G11	3080	1 3/4"	SINGLE	SC	6 PANEL	B	H.M.	2		
UNDERGRADUATE COMMUNITY BUILDING										
U1	(2) 3080	1 3/4"	PAIR	HD ALUM. ENTRY	1 LITE ADA	D	ALUM.	4	TEMP.	
U2	(2) 3080	1 3/4"	PAIR	HD ALUM. ENTRY	1 LITE ADA	D	ALUM.	4	TEMP.	
U3	3080	1 3/4"	SINGLE	SC	6 PANEL	B	ALUM.	10		
U4	3080	1 3/4"	SINGLE	SC	6 PANEL	B	ALUM.	10		
U5	(2) 3080	1 3/4"	PAIR	SC	6 PANEL	C	H.M.	6		
U6	3080	1 3/4"	SINGLE	HD ALUM. ENTRY	1 LITE	D	ALUM.	7-1	TEMP.	
MAINTENANCE BUILDING										
M1	3080	1 3/4"	SINGLE	SC	6 PANEL	B	H.M.	5		
M2	3068	1 3/8"	SINGLE	HC	6 PANEL	B	TIMELY	2		
M3	8070	--	ROLL-UP	METAL	SECTIONAL	K	WD	--		
M4	8070	--	ROLL-UP	METAL	SECTIONAL	K	WD	--		
M5	3080	1 3/4"	SINGLE	SC	6 PANEL	B	HM	5		

NOTE:

1. ALL ENTRY DOOR LOCKS SHALL BE SCHLAGE E-BOLT ENTRIES.
2. PROVIDE SIGNAGE @ ALL MAIN ENTRIES TO MAIN USE ROOMS PER CBC SEC. 1117B.5.7
3. DOOR THRESHOLDS SHALL CONFORM TO ACCESSIBILITY REQUIREMENTS PER CBC SEC 1133B.2.4.1. SEE DETAIL 8 AND 14, SHEET RD-2 AND 18 SHEET RHC-1 FOR ADDITIONAL INFORMATION

DOOR NOTES

1. ALL ENTRY DOOR HARDWARE SHALL BE LEVER TYPE (UBC-1133B.2.2.4)
2. A CERTIFICATE OF COMPLIANCE WILL BE PROVIDED FOR ALL EXT. DOORS AND WINDOWS. (CEC-116)
3. ALL DOORS, WINDOWS AND OTHER JOINTS IN THE EXT. WALLS WILL BE FULLY INSULATED. (CEC-117)
4. REFER TO DETAIL 2/D-3 FOR DOOR & WINDOW INSTALLATION FLASHING
5. BACK PRIME METAL THRESHOLDS WITH ASPHALT BITUMINE OR EQUAL AT THRESHOLDS IN CONTACT WITH CONCRETE.
6. INSTALL ALL DOORS & HARDWARE IN COMPLIANCE WITH THEIR MANUFACTURER'S INSTALLATION REQUIREMENTS
7. SI FAM= SQUARE INCHES OF FREE AIR MOVEMENT
8. AT DISABLED ACCESSIBLE UNITS INTERIOR PASSAGE DOOR SHALL HAVE HARDWARE CENTERED BETWEEN 30" AND 44" ABOVE THE FLOOR, AND BE OPENABLE WITH A SINGLE EFFORT BY LEVER TYPE HARDWARE.
9. FIRE RATED DOOR ASSEMBLIES SHALL COMPLY WITH 1998 CBC, SECTION 719 (INCLUDING BUT NOT LIMITED TO IDENTIFICATION OF FIRE DOORS; INSTALLATION OF FIRE DOORS, HARDWARE, AND FRAMES; CLOSING DEVICES)

No.	Date	Issue / Description
	11.07.2002	OWNER REVIEW

IT IS THE CLIENTS RESPONSIBILITY PRIOR TO OR DURING CONSTRUCTION TO NOTIFY THE ARCHITECT IN WRITING OF ANY PERCEIVED ERRORS OR OMISSIONS IN THE PLANS AND SPECIFICATIONS OF WHICH A CONTRACTOR THOROUGHLY KNOWLEDGEABLE WITH THE BUILDING CODES AND METHODS OF CONSTRUCTION SHOULD REASONABLY BE AWARE. WRITTEN INSTRUCTIONS ADDRESSING SUCH PERCEIVED ERRORS OR OMISSIONS SHALL BE RESPONDED UPON BY THE ARCHITECT. NO THE ISSUED AND CERTAIN NEGOTIATION PROCEDURES MAY BE IN PLACE. THE CLIENT,