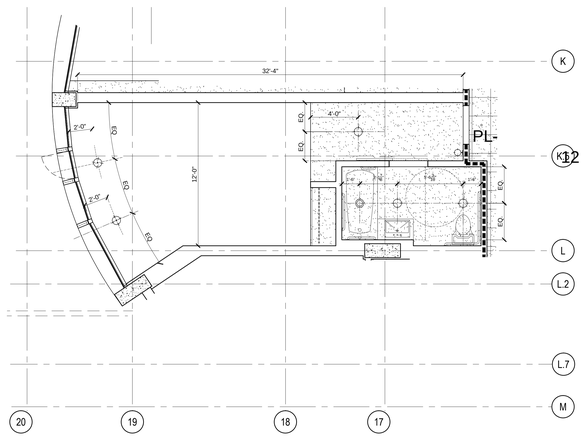

ENLARGED RCP TYP. GUEST ROOM E-7/E-7.1/E-7.2 — 1/4" = 1'-0" — 10

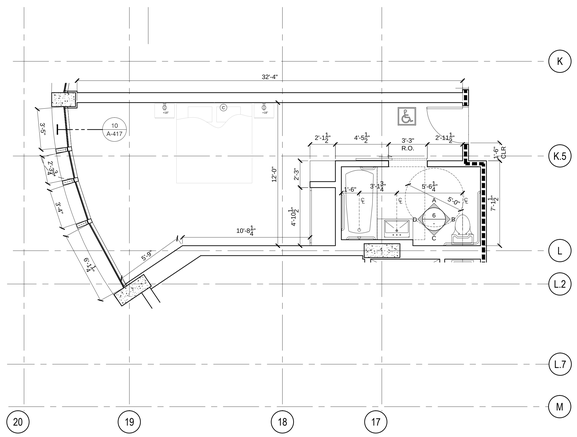

ENLARGED TYP. GUEST ROOM E-7.1 — 1/4" = 1'-0" — 8

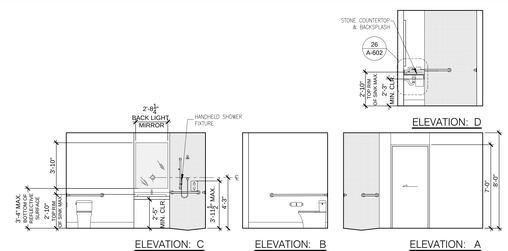

TYPICAL BATHROOM ELEVATIONS — 1/4" = 1'-0" — 6

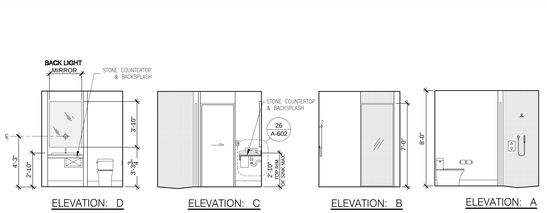

TYPICAL BATHROOM ELEVATIONS — 1/4" = 1'-0" — 3

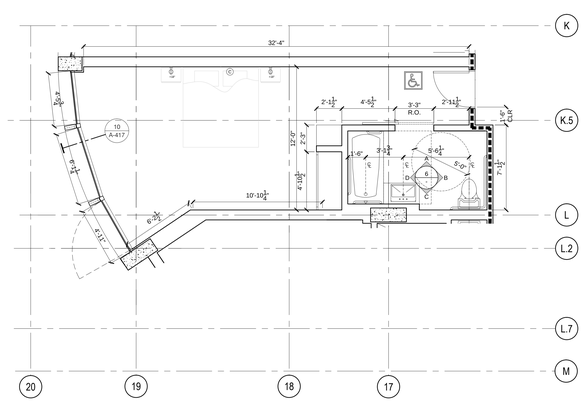

ENLARGED TYP. GUEST ROOM E-7.2 — 1/4" = 1'-0" — 9

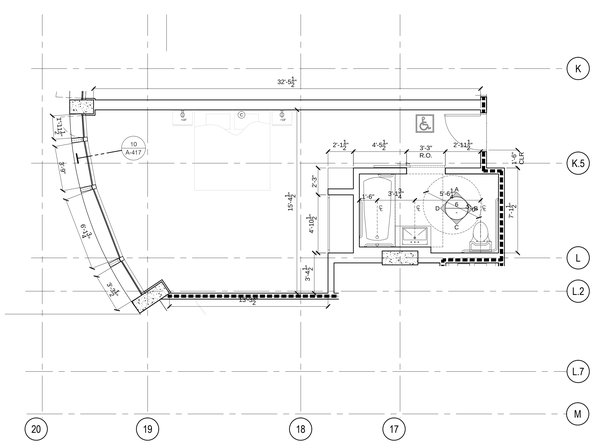

ENLARGED TYP. GUEST ROOM E-7 — 1/4" = 1'-0" — 7

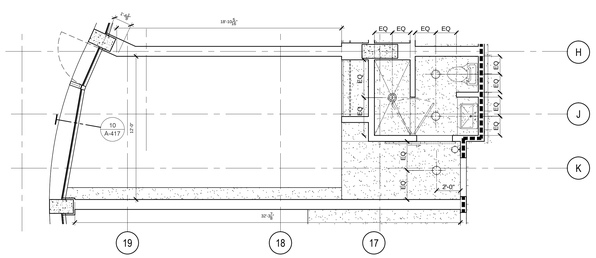

ENLARGED RCP TYP. GUEST ROOM E-6 — 1/4" = 1'-0" — 5

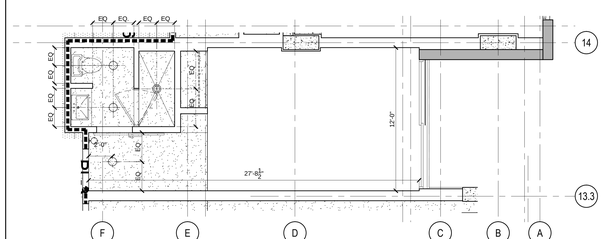

ENLARGED RCP TYP. GUEST ROOM E-5 — 1/4" = 1'-0" — 2

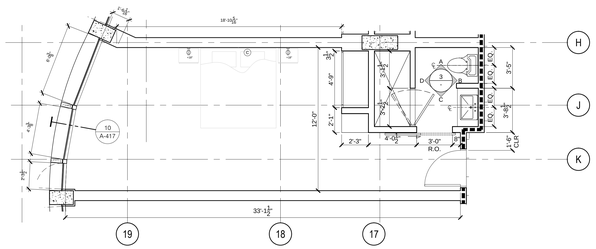

ENLARGED TYP. GUEST ROOM E-6 — 1/4" = 1'-0" — 4

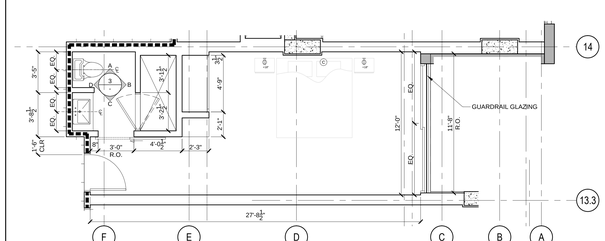

ENLARGED TYP. GUEST ROOM E-5 — 1/4" = 1'-0" — 1

REVISIONS

BY	DATE	DESCRIPTION
-	06/07/2013	Milestone 02
-	06/24/2013	Milestone 03
-	06/24/2013	Milestone 04
-	06/27/2013	Milestone 05
-	06/27/2013	Milestone 05

hla
howard laks architects
1545 twelfth street
santa monica, ca 90401
voice : 310-393-4455
fax : 310-393-2230

CONSULTANTS

710 WILSHIRE BOULEVARD
MIXED-USE HOTEL PROJECT
SANTA MONICA - CALIFORNIA 90401

ENLARGED GUEST ROOM PLANS

DRAWN: SKH / SC
CHECKED: HLA
APPROVED: –
SCALE: AS NOTED
SHEET: A-228
DATE: June 25, 2013
PROJECT NUMBER: HLA 0000000-00000