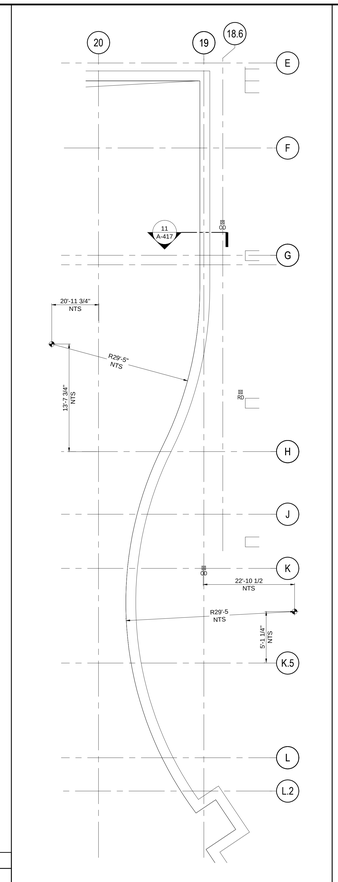

ENLARGED PLAN
LEVEL 07 | 7

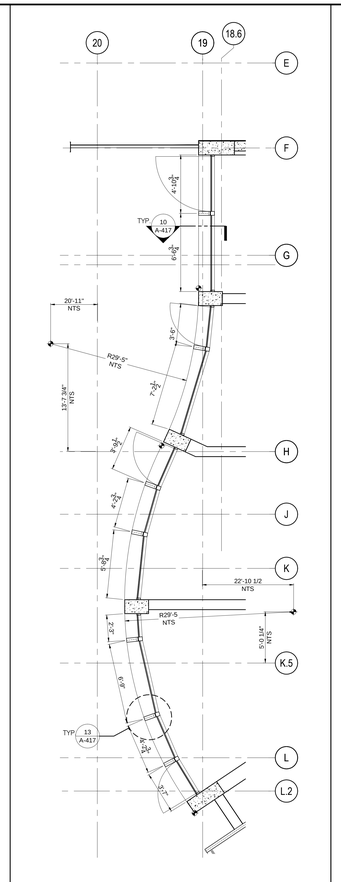

ENLARGED PLAN
LEVEL 06 | 1/4" = 1'-0" | 6

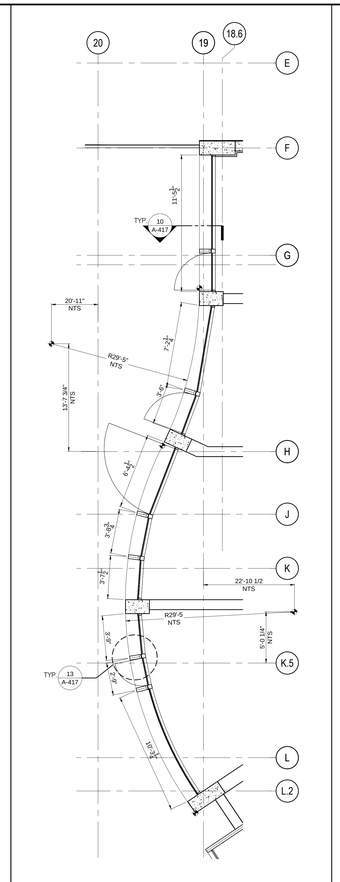

ENLARGED PLAN
LEVEL 05 | 1/4" = 1'-0" | 5

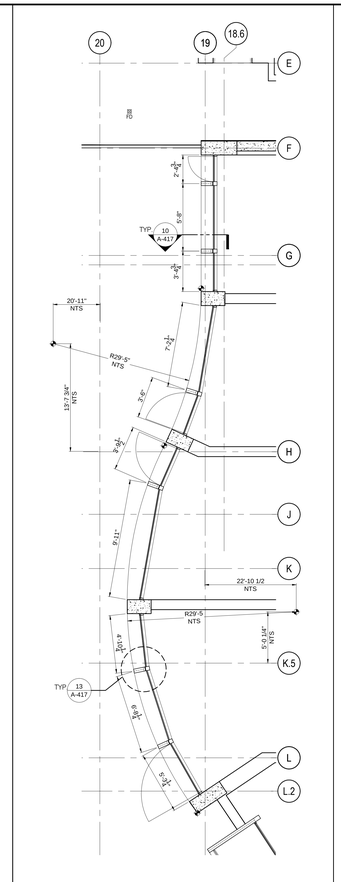

ENLARGED PLAN
LEVEL 04 | 1/4" = 1'-0" | 4

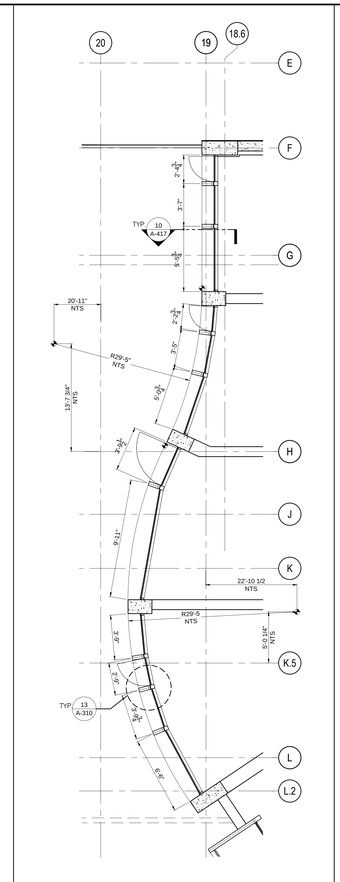

ENLARGED PLAN
LEVEL 03 | 1/4" = 1'-0" | 3

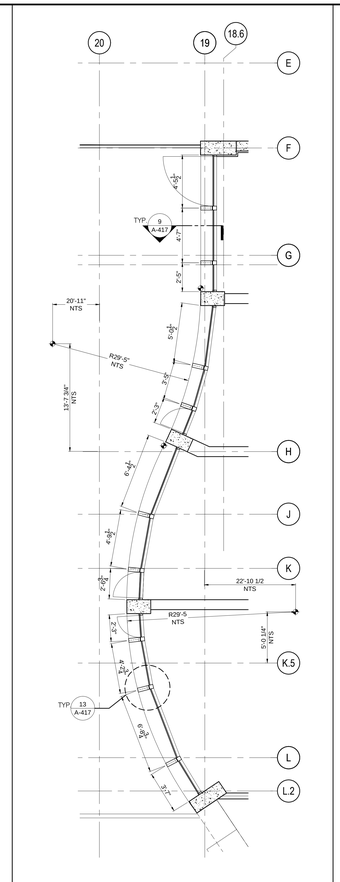

ENLARGED PLAN
LEVEL 02 | 1/4" = 1'-0" | 2

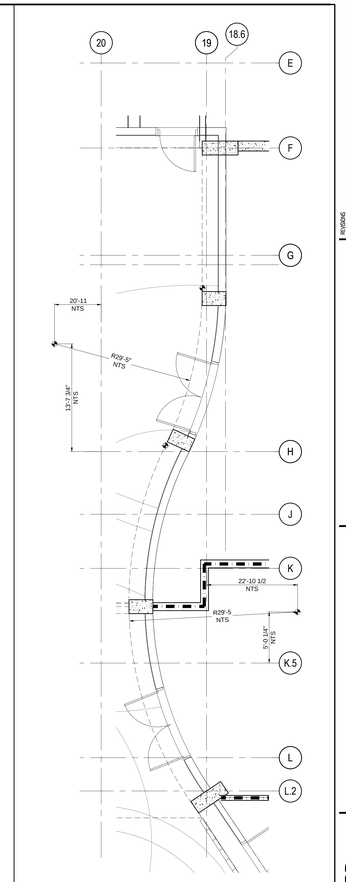

ENLARGED PLAN
GROUND LEVEL | 1/4" = 1'-0" | 1

LEGEND

GFRC PANELS

DENOTES STARTING POINT OF CURVE

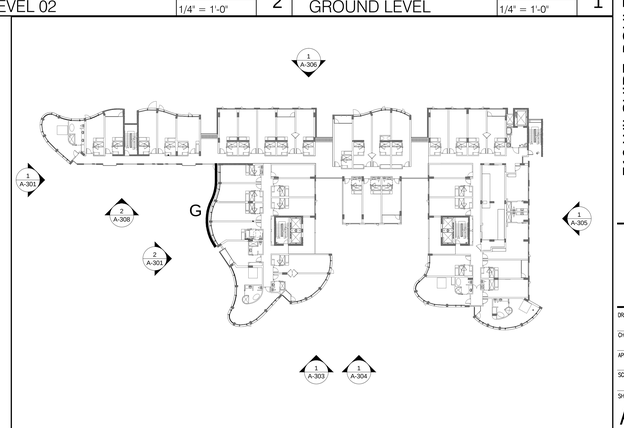

KEY MAP

REVISIONS

BY	DATE	DESCRIPTION
-	06/01/2015	Milestone 01
-	06/04/2015	Milestone 03
-	06/05/2015	Milestone 04
-	06/10/2015	Milestone 05
-	06/22/2016	Milestone 05

hla
howard laks architects
1545 twelfth street
santa monica, ca 90401
voice : 310-393-4455
fax : 310-393-2230

CONSULTANTS

710 WILSHIRE BOULEVARD
MIXED-USE HOTEL PROJECT
SANTA MONICA - CALIFORNIA 90401

ENLARGED PLANS

DRAWN: SC
CHECKED: HLA
APPROVED: –
SCALE: AS NOTED
SHEET: A-309K
DATE: June 25, 2013
PROJECT NUMBER: HLA 0000000-00000