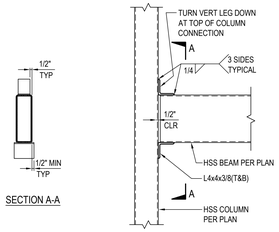


1"=1'-0" NTS

NOT USED 13

TYPICAL HSS BEAM TO HSS COLUMN CONNECTION 9

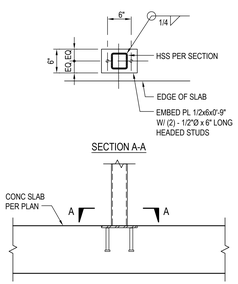


1"=1'-0"

HSS CONNECTION AT BASE DETAIL 12

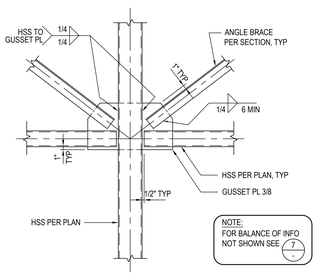


1"=1'-0"

CONNECTION DETAIL AT BRACE 8

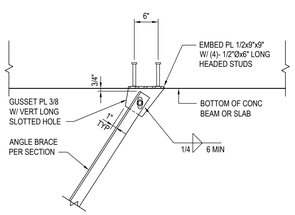


1"=1'-0"

BRACE CONNECTION DETAIL 11

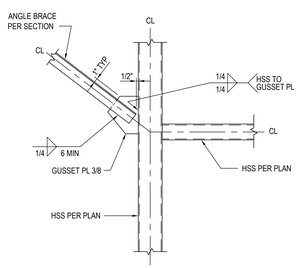


1"=1'-0"

CONNECTION DETAIL AT BRACE 7

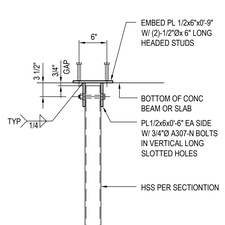


1"=1'-0"

NOT USED 10

HSS TOP CONNECTION DETAIL 6

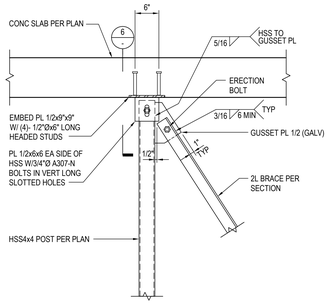


1"=1'-0"

HSS TOP CONNECTION DETAIL AT BRACE 5

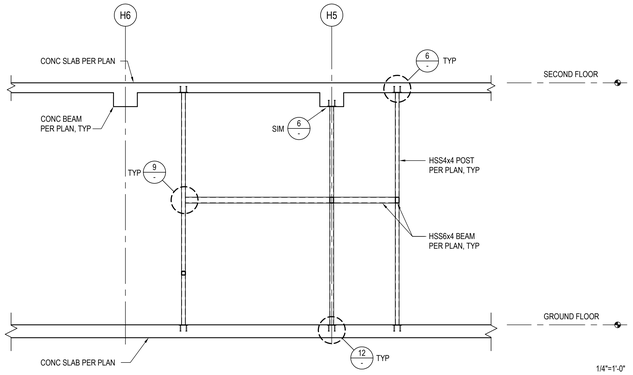


1/4"=1'-0"

PLATFORM SECTION AT AHU-1 UNIT 2

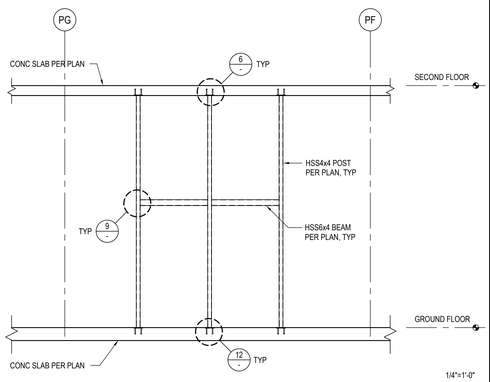


1/4"=1'-0"

PLATFORM SECTION AT AHU-1 UNIT 4

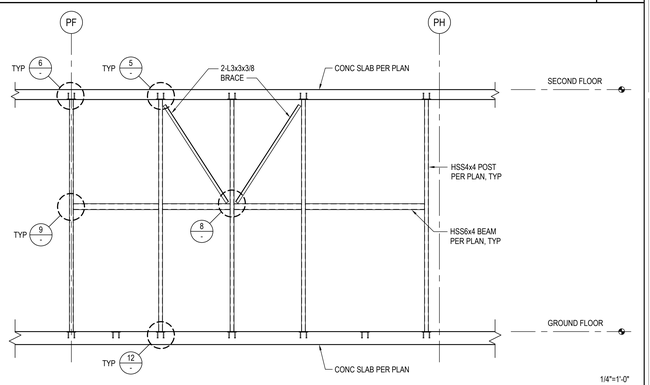


1/4"=1'-0"

PLATFORM SECTION AT AHU-1 UNIT 1

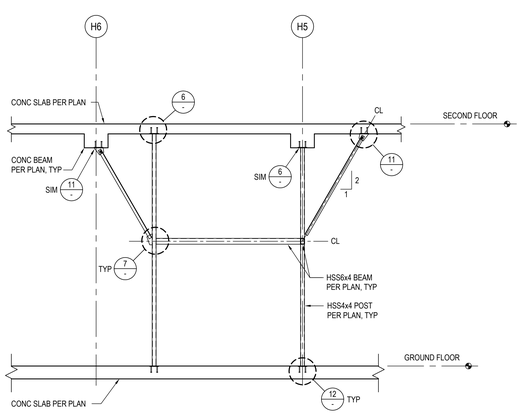


1/4"=1'-0"

PLATFORM SECTION AT AHU-1 UNIT 3

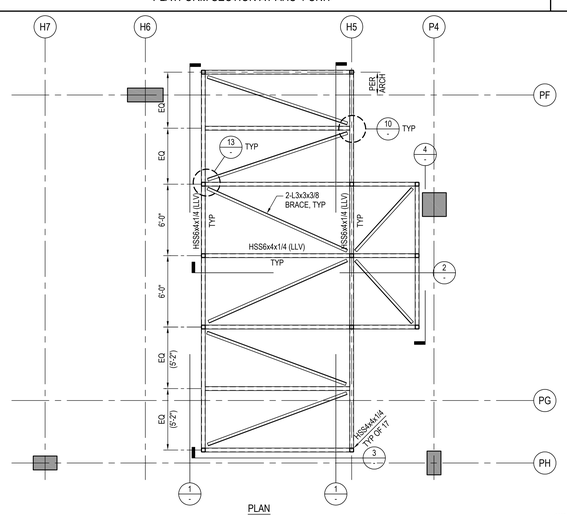


1/4"=1'-0"

PLATFORM FRAMING FOR AHU-1 AT GROUND FLOOR (REF: 3 & 4/A253) A

| NO. | DATE | DESCRIPTION |
|---|---|---|
| 02 | 05/07/2015 | Addendum 02 |
| 03 | 08/04/2015 | Addendum 03 |
| 04 | 10/30/2015 | Addendum 04 |
| 05 | 05/27/2016 | Addendum 05 |

hla
howard laks architects
voice 310-393-4455
fax - 310-393-2230
1545 berlin street
santa monica, ca 90401

CONSULTANTS

sb
saiful bouquet
structural engineers
136 S. Lake Avenue
Suite 300
Pasadena, California 91101
Telephone 626.304.3616
Facsimile 626.304.3626
SB Job No: 13482

# 710 WILSHIRE BOULEVARD

MIXED-USE HOTEL PROJECT
SANTA MONICA - CALIFORNIA 90401

STEEL DETAILS

REGISTERED PROFESSIONAL ENGINEER
SAIFUL BOUQUET
No. S 4401
EXP. 09/30/15
STRUCTURAL
STATE OF CALIFORNIA

DRAWN –
CHECKED ED
APPROVED MD
SCALE –
SCALE NTS
SHEET S-701
DATE June 25, 2013
PROJECT NUMBER HLA 0000000–00000