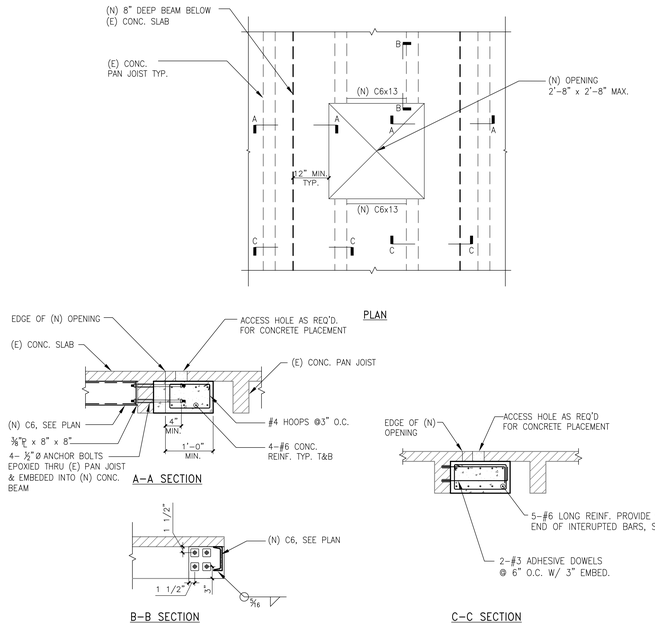

NOTES:
1. REFER TO DETAIL 13/LM-S-502 OR 16/LM-S-502 FOR CONNECTION DETAIL OF (N) CONCRETE BEAM TO (E) CONCRETE BEAM OR WALL.

22 (N) OPENING CUTTING TWO PAN JOISTS
N.T.S.

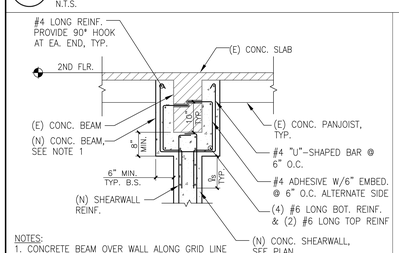

NOTES:
1. CONCRETE BEAM OVER WALL ALONG GRID LINE L4, BETWEEN GRID LINES L1-L6, TO EXTEND TO EDGE OF STAIR OPNG. SEE DETAIL 21/LM-S-503 FOR (N) CONC. BEAM TO (E) CONC. BEAM CONNECTION DETAIL.

23 (N) 8" CONCRETE SHEAR WALL CONNECTION @ SECOND FLOOR
N.T.S.

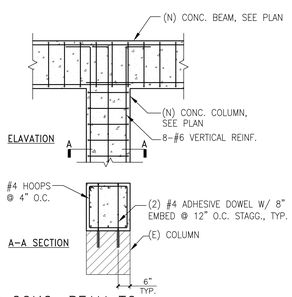

19 (N) CONC. BEAM TO (N) CONC. COLUMN CONNECTION DETAIL
N.T.S.

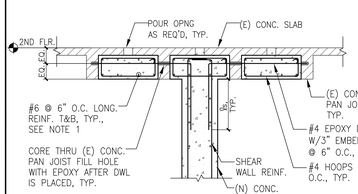

NOTES:
1. REFER TO DETAIL 13/LM-S-502 FOR CONNECTION DETAIL OF (N) CONCRETE BEAM TO (E) CONCRETE BEAM OR WALL.

24 (N) 12" CONCRETE SHEAR WALL CONNECTION @ SECOND FLOOR
N.T.S.

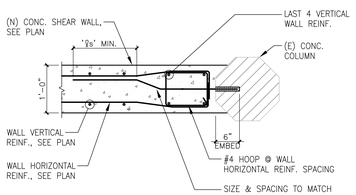

20 (N) CONCRETE SHEAR WALL CONNECTION TO (E) COLUMN
N.T.S.

EXISTING BEAM SCHEDULE

TYPE	W (IN)	D (IN)	T (IN)
EB-2B1	9 1/2	24	20
EB-2B2	8	30	8
EB-2B3	8	30	8
EB-2B4	11 1/2	24	18
EB-2B5	11 1/2	24	17
EB-2B6	11 1/2	24	16
EB-2B7	11 1/2	24	17
EB-2B300	11 1/2	24	20
EB-2B500	9 1/2	24	9 1/2
EB-2B600	9 1/2	24	15
EB-2B700	9 1/2	24	20
EB-2B800	9 1/2	24	12
EB-2S1	9 1/2	20	20
EB-2S2	8	20	8
EB-2S4	11 1/2	24	11 1/2
EB-2S5	9 1/2	20	16
EB-2S6	8	20	8
EB-2S7	8	20	8
EB-2S10	11 1/2	24	11 1/2
EB-2S11	11 1/2	24	11 1/2
EB-2S12	11 1/2	24	11 1/2
EB-2S14	9 1/2	20	18
EB-2S15	9 1/2	20	9 1/2
EB-TB1	9 1/2	20	26
EB-TB2	9 1/2	20	18
EB-TB3	9 1/2	27	15 1/2
EB-TB4	9 1/2	20	9 1/2
EB-TB5	9 1/2	27	9 1/2
EB-TB6	9 1/2	27	12
EB-TB7	9 1/2	27	13 1/2
EB-TB8	9 1/2	27	9 1/2
EB-TB9	9 1/2	20	19
EB-TB10	9 1/2	20	9 1/2
EB-TB11	9 1/2	20	9 1/2
EB-TB12	7 1/2	20	7 1/2
EB-TB13	7 1/2	10 1/2	7 1/2
EB-TB14	7 1/2	10 1/2	7 1/2
EB-TB15	9 1/2	20	9 1/2
EB-TB16	9 1/2	20	9 1/2
EB-TB17	9 1/2	14 1/2	19
EB-TB18	9 1/2	14 1/2	19
EB-TB19	9 1/2	20	14
EB-TB20	7 1/2	20	7 1/2
EB-TB21	7 1/2	20	7 1/2
EB-TB22	5	10 1/2	5
EB-TB23	7 1/2	20	7 1/2
EB-TB24	9 1/2	20	12 1/2
EB-TB25	9 1/2	27	9 1/2
EB-TB26	9 1/2	27	9 1/2
EB-TB27	9 1/2	27	11
EB-TB28	6	27	6
EB-TB29	6	27	6
EB-TB30	5 1/2	12	5 1/2
EB-RB1	15	20	30
EB-RB2	15	20	21
EB-RB3	17	24	21
EB-RB4	9 1/5	20	9 1/2
EB-RB5	9 1/5	20	9 1/2
EB-RB6	11 1/2	24	22
EB-RB6A	9 1/5	20	16
EB-RB7	11 1/2	24	21
EB-RB8	15	26	24
EB-RB8A	9 1/5	20	21
EB-RB9	11 1/2	20	24
EB-RB10	11 1/2	20	14
EB-RB11	11 1/2	20	17
EB-RB12	11 1/2	28	11 1/2
EB-RB13	11 1/2	28	17
EB-RB15	11 1/2	28	11 1/2
EB-RB16	8	26	8
EB-RB17	11 1/2	32	16
EB-RB18	11 1/2	20	14
EB-RB19	9 1/5	20	17
EB-RB20	11 1/2	28	19
EB-RB21	9 1/5	20	9 1/2
EB-RB23	9 1/2	48	9 1/2
EB-RB24	11 1/2	32	16
EB-RB25	9 1/5	20	13 1/2
EB-RB26	9 1/5	20	15
EB-RB27	9 1/5	20	16
EB-RB28	11 1/2	24	11 1/2
EB-RB29	6	30	6
EB-RB30	6	30	6

NOTES:
1. NO PENETRATION SHALL OCCUR AT EXISTING BEAM AND THROUGH ITS TEE FLANGE.
2. BEAM SIZES PROVIDED ARE FROM ORIGINAL STRUCTURAL DRAWINGS AND SHALL BE FIELD VERIFIED.

16 EXISTING BEAM SCHEDULE
N.T.S.

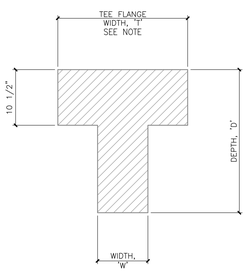

6 NOT USED
N.T.S.

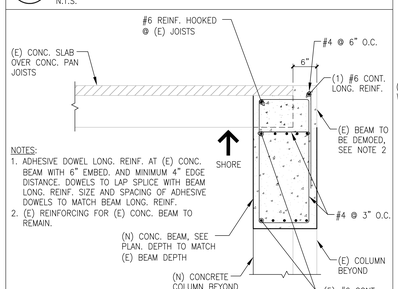

NOTES:
1. ADHESIVE DOWEL LONG. REINF. AT (E) CONC. BEAM WITH 6" EMBED. AND MINIMUM 4" EDGE DISTANCE. DOWELS TO LAP SPLICE WITH BEAM LONG. REINF. SIZE AND SPACING OF ADHESIVE DOWELS TO MATCH BEAM LONG. REINF.
2. (E) REINFORCING FOR (E) CONC. BEAM TO REMAIN.

7 (N) CONC. BEAM @ (N) WALL OPENING
N.T.S.

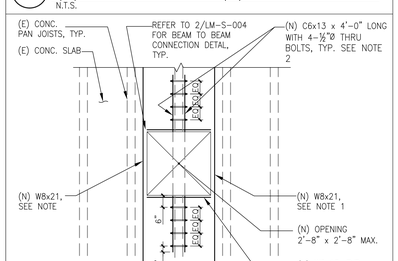

NOTES:
1. REFER TO DETAIL 4/LM-S-701 FOR CONNECTION DETAIL OF (N) W8 BEAM TO (E) CONCRETE BEAM @ EACH END.
2. WELD C6 BEAM TO W8 BEAM WITH 1/4" FILLET WELD ALL AROUND.

8 (N) OPENING CUTTING ONE PAN JOIST
N.T.S.

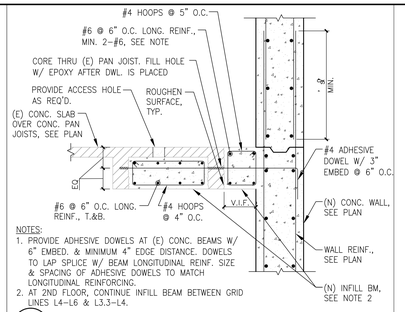

NOTES:
1. PROVIDE ADHESIVE DOWELS AT (E) CONC. BEAMS W/ 6" EMBED. & MINIMUM 4" EDGE DISTANCE. DOWELS TO LAP SPLICE W/ BEAM LONGITUDINAL REINF. SIZE & SPACING OF ADHESIVE DOWELS TO MATCH LONGITUDINAL REINFORCING.
2. AT 2ND FLOOR, CONTINUE INFILL BEAM BETWEEN GRID LINES L4-L6 & L3.3-L4.

1 (N) SHEAR WALL @ (E) SLAB
N.T.S.

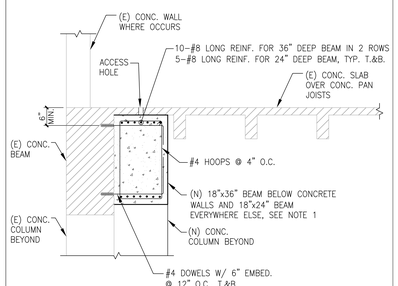

A - (E) PAN JOISTS PARALLEL TO (N) BEAM

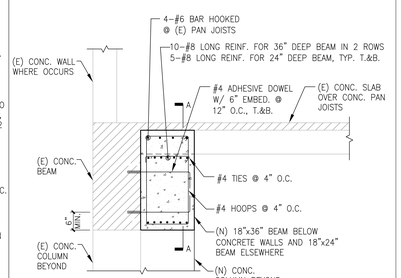

ELEVATION

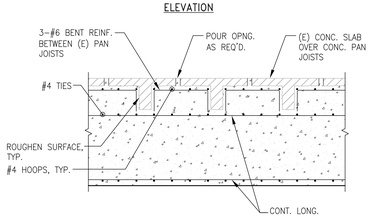

A-A SECTION

B - (E) PAN JOISTS PERPENDICULAR TO (N) BEAM

NOTES:
1. BEAM ALONG GL. L1 BETWEEN GL. LC & LA TO BE 12"x24" W/ 4-#6 LONG. REINF. T.&B.

4 (N) CONCRETE BEAM CONNECTION @ 2ND FLOOR DETAIL
N.T.S.

REVISIONS	DATE	DESCRIPTION
1	06/01/2015	Addendum 02
2	10/04/2015	Addendum 03
3	11/13/2015	Addendum 04
4	02/12/2016	Addendum 05
5	06/27/2016	Addendum 05

hla
howard laks architects
voice - 310-393-4455
fax - 310-393-2230
1545 twelfth street
santa monica, ca 90401

CONSULTANTS

STRUCTURAL FOCUS
19210 S. Vermont Avenue
Building B, Suite 210
Gardena, California 90248
TEL: 310.323.9494
FAX: 310.323.9925

REGISTERED PROFESSIONAL ENGINEER
No. S3005
Exp. 6/30/16
STRUCTURAL
STATE OF CALIFORNIA

710 WILSHIRE BOULEVARD
MIXED-USE HOTEL PROJECT
SANTA MONICA - CALIFORNIA 90401

CONCRETE DETAILS

PRELIMINARY - NOT FOR CONSTRUCTION

DRAWN
CHECKED -
APPROVED -
SCALE AS NOTED
SHEET LM-S-501
DATE JUNE 25, 2013
PROJECT NUMBER 10129