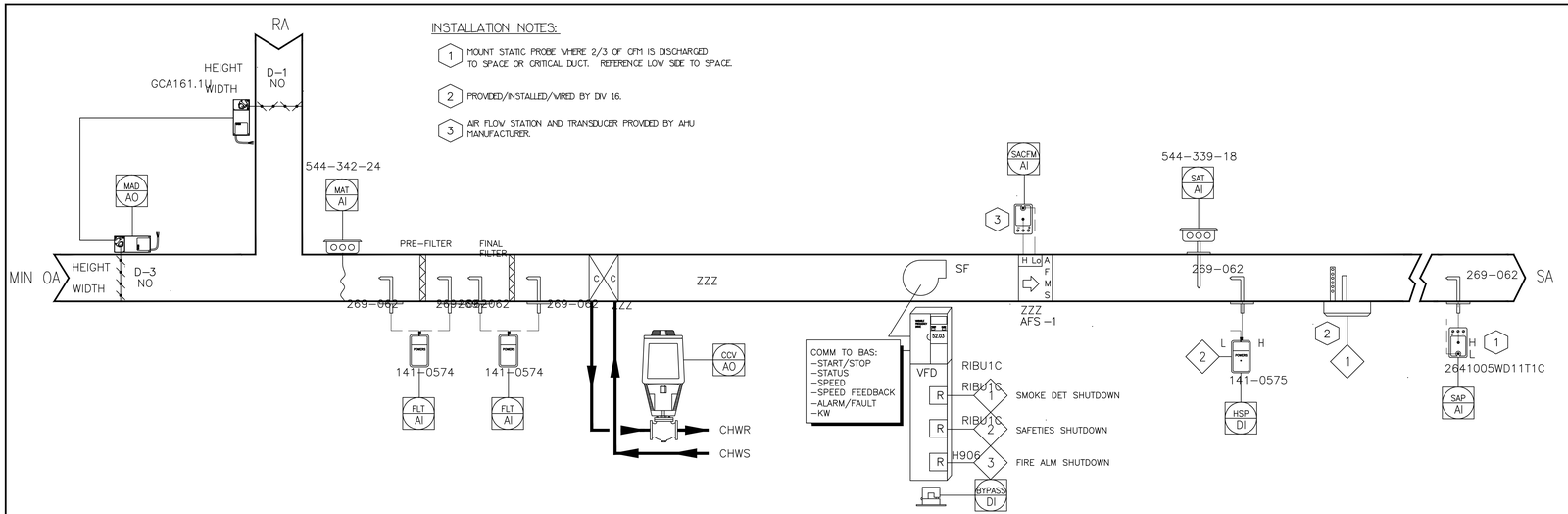

AIR HANDLER CONTROL DIAGRAM

SCALE NONE (2)

Sequence of Operations:
The air-handling unit is scheduled for automatic operation on a time of day basis for Occupied (7:00 am to 5:00 pm Monday through Friday) and Unoccupied modes.

The air-handling unit operates in Occupied and Unoccupied modes as follows (all suggested set points are adjustable).

Occupied Mode

Supply Fan Control
Supply fan shall start and modulate speed to maintain the duct static pressure at set point. If any VAV box damper command is greater than 95%, the set point shall be incremented upward by 0.04" WC (adjustable) at 2 minute intervals. If no VAV box damper command is greater than 85%, the set point shall be decremented downward by 0.04" WC at 2 minute intervals.

Supply fan status shall be monitored and if the supply fan command and status do not match, an alarm shall be generated. If the supply fan is in alarm, it shall be commanded to OFF.

The manual reset supply duct static pressure high limit switch and a contact from the fire system for fire shutdown shall be hardwired directly to the supply fan variable speed drive.

Supply Temperature Control
When the outside air dry bulb temperature is below the economizer changeover value, the cooling coil valve and mixed air dampers modulate in sequence without overlap to maintain the supply air temperature set point. The mixing dampers ramp open slowly to minimize overshooting.

When the outside air dry bulb temperature is above the economizer changeover value, the mixing dampers are placed in the minimum outdoor air position. The cooling coil valve modulates to maintain the supply air temperature set point.

The initial set point shall be 65 deg F. If any zone temperature is above the zone set point, the supply duct temperature set point shall be decremented downward by 1 deg F at 2 minute intervals. If all the zones temperatures are equal or below the zone set point, the supply duct temperature set point shall be incremented upward by 1 deg F at 2 minute intervals.

Filter Monitoring
Differential pressure sensors across the filters shall generate an alarm when pressure drop across the filter is 2x (adjustable) the clean filter pressure drop.

Unoccupied Mode

Supply Fan
Supply fan is commanded to stop. Supply fan speed is commanded to 0.

Supply Temperature Control
Chilled water valve is commanded to close and the economizer dampers are closed.

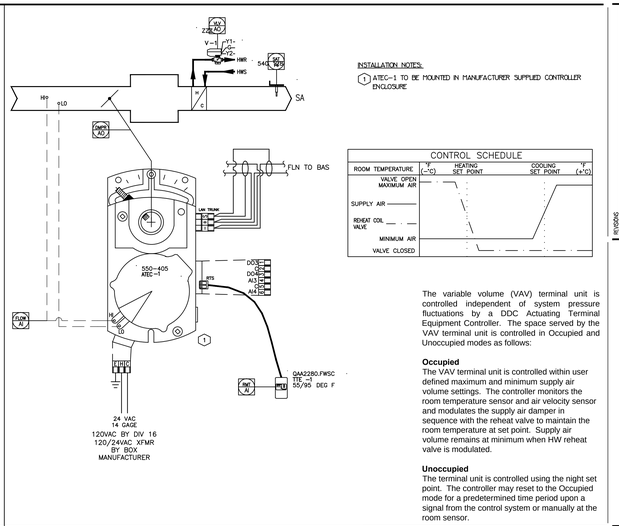

The variable volume (VAV) terminal unit is controlled independent of system pressure fluctuations by a DDC Actuating Terminal Equipment Controller. The space served by the VAV terminal unit is controlled in Occupied and Unoccupied modes as follows:

Occupied
The VAV terminal unit is controlled within user defined maximum and minimum supply air volume settings. The controller monitors the room temperature sensor and air velocity sensor and modulates the supply air damper in sequence with the reheat valve to maintain the room temperature at set point. Supply air volume remains at minimum when HW reheat valve is modulated.

Unoccupied
The terminal unit is controlled using the night set point. The controller may reset to the Occupied mode for a predetermined time period upon a signal from the control system or manually at the room sensor.

VAV W/REHEAT COIL CONTROL DIAGRAM

SCALE NONE (1)

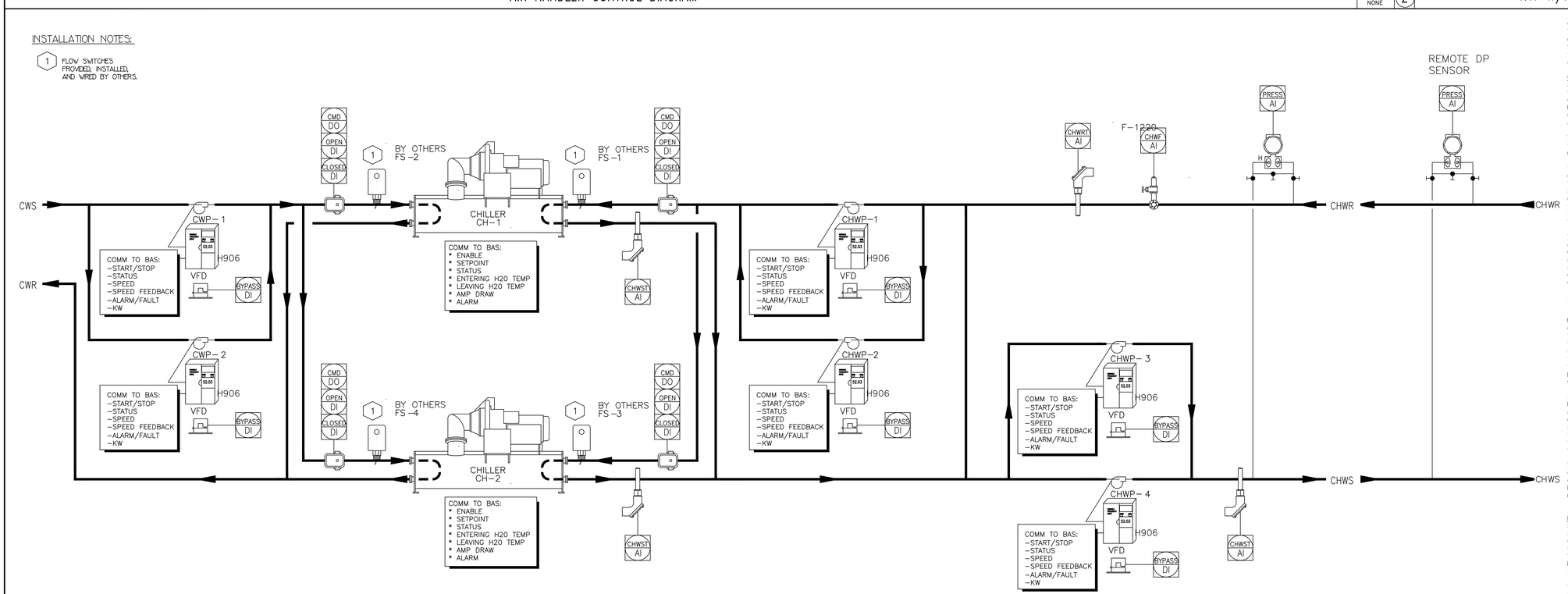

Chiller Plant Sequence of Operations:
The chilled water system is a primary/secondary design consisting of two chillers, two primary chilled water pumps, two secondary chilled water pumps, and two condenser water pumps. All suggested set points and settings are adjustable.

Chiller Control
Selection of the lead/lag chiller shall be evaluated on a weekly basis to equalize equipment runtime. The chiller with the least runtime shall be designated as lead at 7:00 AM on every Wednesday. If the lead chiller goes into alarm, the lag chiller starts and an alarm is generated.

The chilled water supply temperature set point is set to the chiller plant design temperature and can be manually adjusted upward by the operator.

The chilled water system enable point is controlled either manually by the operator or by a program function (i.e., Time-Of-Day). If the chilled water system enable point is on and there is a call for cooling (indicated by one or more selected cooling coil valves being open more than 35%) and the outside air temperature is above 55 degrees F (13 degrees C), the lead chiller start sequence is activated.

The chiller start sequence first opens the chilled water and condenser water isolation valves. After a time delay, the condenser and primary chilled water pumps are enabled. After another time delay, the chiller start/stop point turns on. After flow is proven, the chiller operates under its operating and safety controls.

After any chiller(s) are commanded, the program waits for 15 minutes before issuing any other commands.

If the lead chiller load is above 95% of the chiller capacity for 15 minutes or the chilled water supply temperature is more than 2 degrees above the chilled water set point for 15 minutes, the lag chiller start sequence is activated. The lag chiller start sequence first enables the lag condenser and lag primary chilled water pumps. After a time delay, the chiller start/stop point turns on. After flow is proven, the chiller operates under its operating and safety controls.

After a 30 minute delay, if the operating chiller load is below 80% of the lead chiller capacity for 5 minutes and the chilled water supply temperature is within 2 degrees of the chilled water set point, the chiller stop sequence first stops the lag chiller. After a time delay, the chiller isolation valves are closed. After another time delay, the lag condenser and lag primary chilled water pumps are stopped.

The chilled water system continues to operate until either the chilled water system enable point is off or cooling is no longer required (indicated by all AHUs being off or all cooling coil valves being closed for a 30 minute time interval).

Primary Chilled Water Pumps
Selection of the lead/lag primary chilled water pumps shall be evaluated on a weekly basis to equalize equipment runtime. The pump with the least runtime shall be designated as lead at 9:00 AM on every Wednesday. If the old lead pump is running, the new lead pump shall ramp up to desired speed and then the old lead pump shall turn OFF.

The lead primary chilled water pump shall run anytime a chiller is enabled. The primary chilled water pump will run at a set speed as set by the water balancer to maintain the required flow across the chillers.

If lead chilled water pump is in alarm or the lag chiller is enabled, the lag pump shall turn ON. It shall ramp up to the same speed as the lead pump and they shall run in conjunction. 2 minutes after the chillers are disabled, the primary chilled water pump shall be disabled.

Chilled water pumps' status shall be monitored and if the chilled water pump's command and status do not match, an alarm shall be generated.

Secondary Chilled Water Pumps
Selection of the lead/lag secondary chilled water pumps shall be evaluated on a weekly basis to equalize equipment runtime. The pump with the least runtime shall be designated as lead at 8:00 AM on every Wednesday. If the old lead pump is running, the new lead pump shall ramp up to desired speed and then the old lead pump shall turn OFF.

The lead chilled water pump shall run anytime the chilled water system is enabled (determined by 3 or more chilled water valves being open more than 80% for more than 2 minutes). Based on the reading of the remote differential pressure sensor, the set point of the central plant differential pressure sensor shall be reset to maintain a differential pressure set point (initially set at 15 psi) at remote differential pressure sensor.

If lead chilled water pump is in alarm or it is running above 90% speed for more than 2 minutes and cannot maintain the chilled water differential pressure within 2 psi of set point, the lag pump shall turn ON. It shall ramp up to the same speed as the lead pump and they shall run in conjunction to maintain the chilled water differential pressure at set point. Once the chilled water differential pressure is at set point and both pumps are running at less than 50% speed for more than 2 minutes and the lead pump is not in alarm, then the lag pump shall turn OFF. 2 minutes after the chilled water system is disabled (determined by all chilled water valves being open less than 20% for more than 2 minutes) the lead chilled water pump shall turn OFF.

Chilled water pumps' status shall be monitored and if the chilled water pumps' command and status do not match, an alarm shall be generated.

Condenser Water Pumps:
Selection of the lead/lag condenser water pumps shall be evaluated on a weekly basis to equalize equipment runtime. The pump with the least runtime shall be designated as lead at 8:00 AM on every Wednesday. If the old lead pump is running, the new lead pump shall ramp up to desired speed and then the old lead pump shall turn OFF.

The condenser water pump will always maintain at least the minimum speed required to maintain the minimum condenser water flow through the chiller and cooling towers. The condenser water pump speed shall modulate between the minimum and maximum speed in order to maintain a condenser water return temperature set point equal to condenser water supply plus 10 deg F.

CHILLER PLANT CONTROL DIAGRAM

SCALE NONE (3)

howard laks architects
1545 twelfth street
santa monica, ca 90401
voice - 310-393-4455
fax - 310-393-2233

CONSULTANTS
Donald P. Dickerson Associates
CONSULTING MECHANICAL & ELECTRICAL ENGINEERS
1900 WEST GARVEY AVENUE, SUITE 404
WEST COVINA, CA 91790
TEL: (626) 960-1405
FAX: (626) 960-1461
E-MAIL: DPDA@DPDENGINEERS.COM
JOB NO. 201225

REVISIONS

BY	DATE	DESCRIPTION
-	06/07/2013	Milestone 02
-	06/24/2013	Milestone 03
-	06/26/2013	Milestone 04
-	06/27/2013	Milestone 05
-	06/27/2013	Milestone 05

710 WILSHIRE BOULEVARD
MIXED-USE HOTEL PROJECT
SANTA MONICA - CALIFORNIA 90401
MISC. CONTROL DIAGRAMS

DRAWN CM
CHECKED –
APPROVED –
SCALE –
SHEET M-407
DATE June 25, 2013
PROJECT NUMBER HLA 0000000-00000